RMT

ENVIRONMENT • ENERGY • ENGINEERING

Fac/Perm/Co ID #	Date	Doc ID#
mighas	04/22/09	DIN 7319

Solid Waste Permit Modification

Landfill Gas-to-Energy System

Durham Sanitary Landfill
Durham, North Carolina

Revised April 2009

DITOS RECEIVED
APR 21 2009
WASTE SECTION

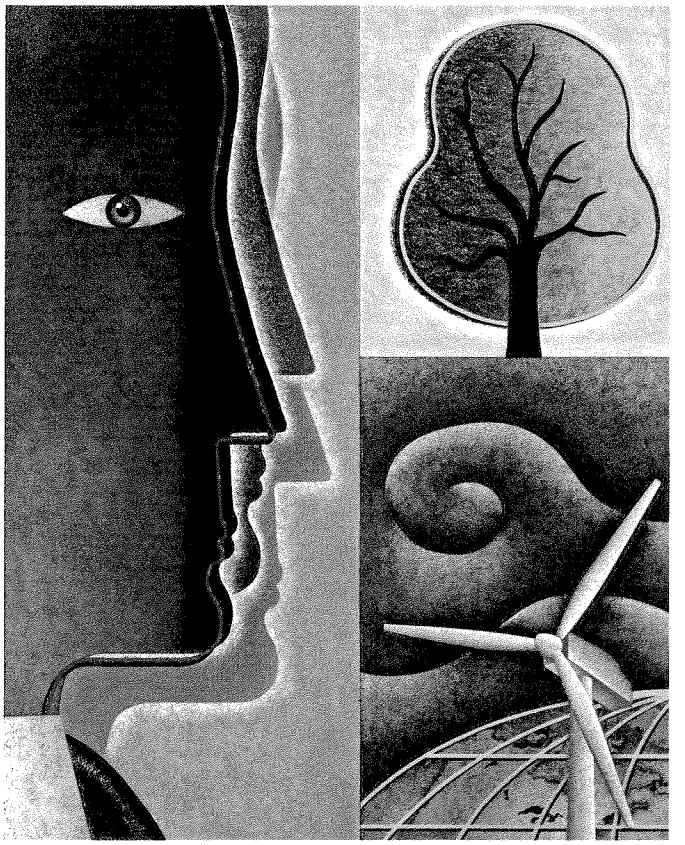

APPROVED
DIVISION OF WASTE MANAGEMENT
SOLID WASTE SECTION
DATE April 29, 2009 **BY** [signature]

RMT

• ENVIRONMENT • ENERGY • ENGINEERING

April 15, 2009

Mr. Ming-Tai Chao, P.E.
Review Engineer
North Carolina Department of Environment and Natural Resources
1646 Mail Service Center
Raleigh, North Carolina 27699-1646

Subject: Response to Comments and Revised Solid Waste Permit Modification
Landfill Gas-to-Energy (LFGTE) System
Closed Durham Sanitary Landfill, Durham, North Carolina
Permit No. 32-01, Document ID No. 6368

Dear Mr. Chao:

RMT North Carolina, Inc. (RMT) has prepared this letter on behalf of the City of Durham to address the requests for additional information transmitted by the North Carolina Department of Environment, and Natural Resources (NC DENR) Division of Waste Management (the "Division") in a letter to Nancy Newell, P.E., of the Department of Water Management, City of Durham, dated January 15, 2009. A copy of this letter is attached for reference. The requests for additional information were based on the Division's review of the above-referenced Application relative to compliance with the Solid Waste Management Rule (Rules), 15A NCAC 13B .1600.

The developer for this project is MP Durham, LLC (MP Durham). Based on discussions with the Division, MP Durham understands that the MP Durham is not precluded from commencing design and construction of the LFGTE system pending approval of these responses. However, MP Durham understands that it must receive the Division's approval of these responses before initiating operation of the LFGTE System.

To facilitate the Division's review, the full text of the Division's requests for information and/or comments are presented below in italicized font, and are followed by the prepared responses to each. In addition, the entire Application has been revised to incorporate the responses below (the "Revised Application") and a copy is attached.

I:\WPGVL\PJT\00-08029\01\L000802901-003.DOC

30 Patewood Drive, Suite 100 • Greenville, SC 29615-3535 • (864) 281-0030 • (864) 281-0288 FAX • www.rmtinc.com

Comments and Response

General

1. *Please provide the signed, sealed, & dated Engineer's Certification in the Application which states the proposed LFGTE system is designed, based on the engineers' best knowledge and information, and data collected and supplied, to meets the requirements in accordance with the Solid Waste Management Rule 15A NCAC 13B Section .1600. Additionally, drawings shall bear the seal of the project engineer who is registered in the State of North Carolina in accordance with the requirement stated in Rule .1603(b).*

   Response: The Engineer's Certification of the Application has been prepared and is included in the Revised Application attached to this response letter, as Section 1.1. An updated set of the Revised Application permit drawings are provided and each drawing has been sealed by the Project Engineer (P.E.).

Section 1 – Introduction

2. *(the first paragraph in Section 1.1) The Division knew that MP Durham LLC leased the property from the City of Durham for developing this LFGTE project but does not clearly understand which party will conduct the daily operation of the LFGTE system. Please clarify.*

   Response: MP Durham, LLC (MP Durham) will be responsible for the daily operation, monitoring, maintenance, and repair of the LFGTE system. MP Durham will secure the services of a local business entity to perform the required project services. The City of Durham will continue to be responsible for the existing closed landfill and its LFG collection system. However, because operation of the City's LFG collection system is closely tied to that of the LFGTE system, MP Durham has entered into a contract with the City to manage the operation and maintenance of the City's LFG collection system. This information has been added to the Revised Application in the first paragraph of Section 1.2.

3. *(the third paragraph in Section 1.1) The Application does not include an Operations Plan depicting the operation and maintenance [of] the proposed LFGTE system. Please revise the Section 4 accordingly.*

   Response: A LFGTE System Operations Plan will be prepared as part of the construction and installation activities. This approach is necessary since the final system components will continue to be refined throughout the design and installation process, along with the exact operational sequences. The Operations Plan will be a living document in that it will be

continually improved as operation of the LFGTE System commences and proceeds. A draft of the System Operations Plan is currently being prepared and will be submitted to NC DENR as part of the Construction Documentation Report within 30 days following successful System installation. A preliminary outline of the Operations Plan is attached for Reference. This information has been added to the Revised Application in Section 1.2.

Section 2 – Landfill Gas-To-Energy System Design

4. ***In addition to describing the estimated methane gas volume, please also submit data of the estimated service life of the LFTGE project, the designed peak and average operation loads, and projected power outputs provided by the LFTGE system.***

Response: Based on recent monitoring of the LFG collection system, the system is extracting between approximately 1,000 and 1,400 cfm of LFG, at 40% to 45% methane, by volume. The LFGTE System will include up to three Jenbacher engine gensets, model no. JGC-320. Each engine genset has a rated output of 1,059 KW (or approximately 1 MW), for a total potential project output of approximately 3 MWs. The base operation load of each genset unit is approximately 60 amps. The service life of the LFGTE System project is estimated to be approximately 20 to 25 years, based on projections of available methane gas volume and service life of the operational system. The LFGTE system will be maintained to maximize its service life. Continued operation will be dependent on its rate of return over time. This information has been added to the Revised Application to Section 2.12.

5. ***(Section 2.3) This Section proposes that "if the condensate tank operations fail, a high level alarm will result. Operation personnel will be automatically notified." Will this proposal suggest that there will be a 24-hour and 7-day on-call operational personnel on duty at the closed landfill facility? Please clarify.***

Response: If a high condensate level alarm is activated within the main condensate tank, which also acts as a lift station, the LFGTE System will be allowed to continue to operate. However, if the alarm is not addressed within a prescribed amount of time, the operation of the LFG collection system and LFGTE System will be terminated. The two condensate vessels included with the LFG compression and conditioning skid (that discharge to the main condensate tank), also include high condensate level alarms that will terminate operation of the compression and conditioning skids if activated. Operations personnel will be available during the typical work day, Monday through Friday, 8:00 a.m. to 5:00 p.m. and will be available on-call via pager 24/7 in accordance with the Plan of Operations. If an alarm occurs outside the work day, personnel will be notified of the alarm condition(s) by use of a telephone pager device. Based on the alarm that occurs, a decision will be made as to the

appropriate response, based on the Plan of Operations. This information has been added to the Revised Application to Section 2.3 and will be included in the Plan of Operations.

6. *(Section 2.3) Are there any data and calculations to support the proposal that the existing 4000-gallon condensate tank has sufficient capacity to accommodate the additional condensate generated from the LFGTE processes? Please clarify.*

Response: Based on our most conservative calculations, the LFG collection system and the LFGTE System are anticipated to generate, at most, a combined volume of approximately 505 gallons of condensate daily. Calculations to support these estimates are attached for reference, in Appendix C of the Revised Application. Therefore, the existing 4,000-gallon condensate tank will have sufficient capacity to handle the expected condensate generation. In addition, the float-controlled dual-pump system will adequately direct the condensate to the sanitary sewer manhole. This information has been added to the Revised Application in Section 2.3.

7. *(Sections 2.3 & 2.6 and Drawing Sheet 2 of 3) On Drawing Sheet 2 of 3 please provide the layout of the proposed condensate lines which convey condensate from the proposed LFGTE system to the existing underground condensate tank. The typical details of trenching and piping (LFG and condensate lines) and piping connections and fittings need to be present on drawing as well. Please revise the drawing accordingly.*

Response: The condensate that will be accumulated in the holding tank will be directed by forcemain piping to the designated manhole of the sanitary sewer line that is located on City property. The sewer line will carry the condensate to the City of Durham wastewater treatment plant (WWTP), which is also located on City property, just west of the LFGTE System. It is anticipated that the forcemain piping will be approximately 4-inch diameter inside a 6-inch diameter high-density polyethylene (HDPE) pipe. The outside containment pipe will day-light within the existing condensate tank, and within the sanitary sewer manhole, to allow for visual observation of the containment pipe for leak detection purposes. The updated project drawings, included with this Revised Application, have been updated to include the location of the forcemain piping and the designated manhole, and to include pipe trench details. This information has also been added to the Revised Application in Section 2.3.

8. *What are the operation hours of the proposed LFTGE system? If the system is an automatic-un-manned-24-hours-per-day operation system, how will the operation staff be promptly notified to properly respond any potential incidents such as the condensate spill (in*

Section 2.3) and the malfunction of the LFGTE system (in Section 2.4), or a fire/ an explosion? Please clarify.

Response: The operation of the LFGTE system is proposed to be continuous to maximize the energy produced and distributed to the local utility (Duke Energy). Operation staff will typically be monitoring the operation of the system in-person during typical work day periods. When not on site, operations personnel will be available 24/7 to be automatically notified by use of a telephone pager by the systems when specific alarm conditions occur. The system operations can also be interrogated through a computer internet connection. The internet connection may be used to observe current system status and to make system adjustments. This information has been added to the Revised Application in Section 4.4.

9. *(Section 2.8) Is there a plan to address the fire safety training and prevention issues, fire fighting equipment readiness and routine inspection requirements, explosive gas monitoring and sampling plan, emergency communication systems– internal and external?*

Response: A Safety Plan, including a safety training plan and emergency response plan for use by both management and operations personnel, will be included as part of the System Operations Plan prior to project implementation. Safety training will be provided by MP Durham, MP Inc., to MP Durham project engineers and operations personnel before the start of system operations. Safety training will include that for general operations, trenching, confined space, electrical safety, inspections, monitoring, maintenance, and emergency situations. Emergency situations may include leaks, system malfunctions or damage, fires and explosions. Inspections for leaks and spills, and spill response procedures, have been developed for the City of Durham Stormwater Division permitting process in a document titled, the Spill Prevention and Countermeasures Plan (SPCMP). A copy of the final SPCMP will be included in the Operations Plan following City review and approval.

The Operations Plan will include MP Durham Management and project staff contact and communications information, inspection requirements, emergency prevention and training details, monitoring and sampling plans, and other key operations plans. A preliminary outline of the Operations Plan is included in the Revised Application as new Appendix E for reference. This information has been added to the Revised Application in new Section 4.3.

10. *(Section 2.9) Where are the PLC and Master SCADA system located? If they are housed on-site, please note their locations on related drawings.*

Response: The PLC and Master SCADA systems will be located on site within the electrical and control building shown on the project drawings. The exact configuration and capabilities of the electrical and control system continues to be developed. Final details will be provided in the Construction Documentation Report. This information has been added to the Revised Application in Section 2.9.

11. *(Section 2.9) Will there be a back-up (off-site) data storage system and stand-by generators available for this project? In the event of power outrage or a natural disaster (flood, fire, etc.), how will the metering and control system be functioning? Please clarify.*

Response: At present, it is not anticipated that the project will include a significant off-site data storage or back-up power generation. Rather, the data gathered during operation of the LFGTE System operation will be down-loaded a minimum of once per day from the PLC systems using the Master SCADA System. Critical data will be safe from on site natural disasters in that it will be saved to an internet-based data storage file.

The LFG collection system and the LFGTE System will cease to operate in the event that power to either system is terminated. It is envisioned that the system will be designed such that following short duration power outages, it could be restarted remotely by operations personnel. Since there are no back-up power sources, the systems will not operate unless power is provided by the utility. This information has been added to the Revised Application in Section 2.10.

12. *All records of operation, maintenance, inspection, and monitoring LFGTE system and data from the automated metering and control system must be properly retained at the facility or an alternative location near the facility in accordance with Rule .1626 (10). Please add this requirement to the section.*

Response: All records of operation, maintenance, inspection, and monitoring of the LFGTE System, and data from the System's automated metering and control systems, will be retained at the facility and in internet-based storage files, in accordance with Rule .1626(10). The data will be available within the electrical and control building on the master computer or in hard-copy format. Duplicate copies of operations data will be periodically prepared and maintained at an off site location designated by MP Durham. These requirements have been added to the Revised Application text in Section 4.6.

13. *(Section 2.10) A copy of the Certificate of Public Convenience for this proposed LFGTE need to be included the Construction Document Report stated in Section 3.3.*

Response: The Certificate of Public Convenience has been prepared and recorded with the State of North Carolina Utilities Commission. A copy of this certificate for this LFGTE System is included in Appendix A of the Revised Application. This information has also been added to Section 2.10 of the Revised Application.

Section 3 – Construction Quality Assurance/Quality Control (CQA/QC) Program

14. *Please provide the specifications (including, but not limited to, material, equipment/device, machinery, construction procedures, QA/QC testing, etc.) of tasks mentioned in the Sections 2.5 through 2.9 and the activities described in the Sections 3.1 through 3.2 in the CQA/QC program.*

Response: Please refer to new Appendix F in the Revised Application for draft information for the LFG compression system, conditioning system, the electrical and control building, the engine gensets, and the main condensate tank/lift station pumps and floats. In addition, as this LFGTE System project is being developed as a "design-build" effort, please note that certain specific equipment and material specifications continue to be developed and refined as the project design and procurement processes progress. Therefore, to supplement the information presented in Appendix F, the details of the final selected equipment and materials will be provided with the Construction Documentation Report.

Electrical and mechanical work, including pipe connections, will be performed following manufacturers' requirements and industry-standard practices. Work and quality control, including CQA/QC testing as required, will be performed under the supervision of registered professional engineers experienced in the specific aspects of the project. The completed project will be inspected and approved by MP Durham and the City of Durham Engineering Department in accordance with the local permitting processes.

The concrete design information has been drafted and is provided as a single drawing in new Appendix F to the Revised Application. The concrete design information includes foundation sizes and specifications.

The updated project drawings show the proposed site contours that will serve as the basis for the LFGTE project area. The western area of the proposed LFGTE System will require placement of fill soil to reach design grades. The updated drawings include stormwater

management features as required by the City of Durham. This information has been added to new Section 2.13 of the Revised Application.

15. *(Section 3.2) Where and how are the excessive earthen material and construction wastes disposed of, if present, during the construction and after the entire LFGTE construction is completed? Please clarify.*

Response: The site work preparations for the LFGTE System will result in a net gain of soil. Soil fill is needed in the western part of the project to provide a level work area for the installation of System equipment. The soil fill will be selected to provide suitable structural support for the LFGTE System concrete slabs and vehicular access. Therefore, limited to no soil will be hauled away from the project site. Waste soil requiring off-project disposal will be placed in a City-approve manner on adjacent City property at a location approved by the City, if possible. If necessary, excess soil will be transported off-site and placed at a proper fill site.

Construction wastes will be managed using roll-off waste containers and wastes will be properly disposed of off site. Recycling of waste materials will be practiced to the extent practicable. These procedures have been added to Section 3.2 of the Revised Application.

16. *(Section 3.2.3) Please provide the City Durham-approved erosion and sediment control plan and related drawings to show BMPs locations and details.*

Response: Copies of the City of Durham-approved local permits will be provided to the Division as soon as they become available. The submitted documents are currently being reviewed by the City. The stormwater management practices are included on the revised project drawings and in the SPCMP included in new Appendix G to the Revised Application. A copy of the final approved and issued City Permits will be included in the Construction Documentation Report for the project. This information has been added to new Section 3.2.4 of the Revised Application.

17. *(Section 3.3) The meeting minutes, project-related correspondences, and QA/QC testing reports must be included in the Construction Document Report. Please add this requirement to the section.*

Response: Construction project meeting minutes, project-related correspondences, and project QA/QC testing reports will be included in the Construction Documentation Report. This requirement has been added to Section 3.3 of the Revised Application.

18. *(Section 3.3) Has the Startup, Shutdown, and Malfunction (SMM) Plan submitted to the Division of Air Quality for a review and approved? If so, please provide the approved plan in the Construction Document Report.*

Response: The landfill is not a "major source" for air permitting and is not required to control LFG under National Emission Standards for Hazardous Air Pollutants (NESHAPs) rules. Therefore, the landfill, and the associated LFG collection system and the LFGTE System, is not required to have a Startup, Shutdown, and Malfunction (SSM) Plan as part of operations. The Construction Air Permit was issued by NC DENR on February 18, 2009 and is included with the Revised Application in Appendix B for reference. This information has been added to new Section 4.5 of the Revised Application.

19. *(Section 3.3) Upon completion of the project, the Operation and Maintenance Plan/Manual for the as-built LFGTE system components – gas conditioning and compression system, gas combustion and generator system, the metering and controls (PLC), the back-up blower/flare system, the electric and control (SCADA) system shall be placed in the operating records. Please add this requirement to this section.*

Response: Upon completion of the project, the System Operations Plan for the completed LFGTE System will include the LFG conditioning and compression systems, LFG combustion and electrical generation systems, the metering and controls (PLC and SCADA), the back-up blower/flare systems, the electric and control systems, and other relevant information. This information will be included in the operating records for the project and a copy will be maintained in the electrical and control building on the site. Updated project component specifications will also be included in the Construction Documentation Report. This information has been added to Section 3.3 of the Revised Application.

20. *(Sections 2.11, 3.3 & 4.2) To be consistent with the proposal stated in Sections 2.11 & 4.2, please add the approval document of zoning and inspection permit issued by the City of Durham, the "Maintenance, Inspection, and Monitoring Plan" and Contingency and Response Plan to the Construction Document Report.*

Response: Copies of the City of Durham local approvals and permits granted to the LFGTE System project will be included in the Construction Documentation Report and in the System Operations Plan as appropriate. The System Operations Plan will include details regarding contingencies and responses to operational issues of concern that may develop during System operations. This information has been added to Sections 3.3 and 4.2 of the Revised Application.

21. *(Section 3.3) Please provide a time frame for submitting the completed Construction Document Report with as-built drawings to the Division.*

Response: The Construction Documentation Report, with the as-built drawings, will be prepared and submitted within 30 days of completion of LFGTE System installation and the initiation of full-time System operation. It is anticipated that the initial operation and shake-down period may result in minor System changes. The resulting final System configuration and components information will be critical to the final documents prepared for the Construction Documentation Report and the Operations Plan. This information has been added to Section 3.3 of the Revised Application.

Section 4 – Maintenance, Inspection, and Monitoring Plans

22. *A gas control and monitoring plan specifically designed for this LFGTE system needs to be prepared and submitted the Division for a review and approval. The gas control and monitoring plan stated in Appendix D is not adequate and applicable for this new LFGTE system during the operating period. Please refer the Rule .1626 for preparing the gas control and monitoring plan.*

Response: A Final Gas Control and Monitoring Plan (GCMP) for the LFG collection system and the LFGTE System will be prepared to supplement the existing plan that was approved by NC DENR on July 29, 1996 (included in Appendix D of the Revised Application). The Final Gas Control and Monitoring Plan will be included as part of the System Operations Plan. The System Operations Plan will be prepared during LFGTE System installation and the draft document will be submitted to NC DENR as part of the Construction Documentation Report. The System Operations Plan will be updated during System operations, and a current copy of the Plan will be maintained onsite in the Electrical and Control Building for reference and inspection.

As an initial step, however, a Draft outline of the proposed GCMP has been developed to indicate the activities that will be necessary for proper operation of the LFG collection system and the LFGTE System. This Draft outline is included in new Appendix E of the Revised Application with the draft outline of the Operations Plan. This information has been added to new Section 4.4 of the Revised Application.

23. *(Section 4.2) Please provide the qualification of the "trained personnel" to perform system monitoring and balancing.*

Response: The operations personnel that will be responsible for the LFG collection system and the LFGTE System will have demonstrated experience in operating, inspecting, maintaining, monitoring, balancing, and other pertinent duties related to the systems. The operations personnel will be selected and hired by MP Durham and will be trained in the specifics of the LFG collection system and the LFGTE System, including operational safety and emergency planning, prior to initiating their duties. A draft of a general job description for a "Closed Landfill Gas Technician" is included in new Appendix E for reference. MP Durham will use this general description as a basis for their selection of operations personnel. This information has been added to new Section 4.3 of the Revised Application.

Section 5 – Post- Closure Plan Addendum

24. *(Section 5.1) The Application needs to discuss how to manage or decommission the proposed LFGTE system when the LFG reaches the end of the service life. Please also provide a cost estimate for decommission the system and restoration of site to the Division.*

Response: Operation of the LFGTE System will be systematically reduced in magnitude as the landfill's LFG generation rate declines over time. The LFGTE System is anticipated to utilize three engine gensets initially. Each genset will utilize approximately 300 to 350 cfm of LFG during operation. As the LFG generation rate declines, System operation will eventually transition to the operation of two gensets, and ultimately one genset based on the amount of available LFG. Once the LFG generation rate is insufficient for the operation of one engine genset, or economics become unfavorable, operation of the LFGTE system will be terminated. At that time, the blower and flare will be utilized to extract and combust the LFG that remains available. When operation of the LFGTE System ends, the responsibilities of the operation of the LFG collection system will revert back to the City of Durham and MP Durham's involvement will cease. The operation of the LFGTE System is anticipated to operate for a period of approximately 20 years.

A draft cost estimate for the decommissioning of the LFGTE System and restoration of the site has been prepared for the enclosed Revised Application. The activities associated with the decommissioning include disconnection of LFGTE System equipment from the LFG collection system and from the electrical utility grid, and removal of applicable equipment from the site. For purposes of the decommissioning cost estimate, the concrete pads associated with the LFGTE System will be demolished, removed from the site and disposed of. The electrical and control building is assumed to remain at the site (following LFGTE System operations) for use

by the City as part of continued operation of the LFG collection system. The draft cost estimate is included as a new Appendix H of the Revised Application. The draft cost estimate is currently being evaluated by the City of Durham. The final estimate will be submitted to NC DENR in the Construction Documentation Report. This information has been added to the Revised Application in Section 5.2.

Appendix B – Air Construction Permit Application

25. ***Please provide the Division a copy of air quality permits – NSPS/EG, Title V, MACT, NSR or PSD which are applicable to this LFGTE project. The air quality permit for the existing landfill gas collection and control system (LFGCCS) expired on July 31, 2002.***

Response: The air permit that was in place prior to the start of the LFGTE System design was issued by the Division of Air Quality, NC DENR, on March 16, 2007. This permit is indicated as being valid until February 29, 2012. A copy of this permit is provided in Appendix B for your information.

A permit application for the Air Permit for the LFGTE System was prepared and submitted by RMT to NC DENR Bureau of Air Management on December 17, 2008. The Air Quality Permit was then issued by the Division of Air Quality, NC DENR, on February 18, 2009 and is included in Appendix B of the Revised Application. A copy of the permit will also be included with the Construction Documentation Report and will be maintained as part of the LFGTE System Operations Plan. This information has been added to Section of the Revised Application.

Appendix D – Approved Post-Closure Plan

26. ***(Section 3.1) The post-closure contact for the landfill facility is out-of-date. Please provide the revised contact information.***

Response: Ms. Nancy Newell of the City of Durham has been retained by the City to continue to be the direct City contact for this project, including that for the post-closure care period. Her contact information is provided in Section 1.3 of the Revised Application. Ms. Newell's back-up contact for the landfill is Mr. Don Greeley, P.E. Mr. Greeley's contact information is included in Section 1.3 of the Revised Application.

Drawings

27. ***Please provide a site-wide drawing to show the locations of the 62 landfill gas wells (refer to Section 2.1), the existing landfill gas collection and control system (LFGCCS), and the facility existing conditions***

Response: A copy of the best available drawing showing the existing LFG collection system, titled, "Phase II Gas Extraction Plan", prepared by Malcolm Pirnie, June 1998, is included in new Appendix I of the Revised Application. This drawing shows the location of the 62 LFG extraction wells, the as-built gas lateral and header pipe locations, the existing blower/flare location, the landfill final grades, and the proposed LFGTE System. This information has been added to Section 2.1 of the Revised Application.

Closing

As indicated in the responses to the Division's Request for Information, the revised information has also been incorporated into the Revised Application so that a single current document is available to facilitate future reference. The Revised Application is attached to this letter for Division review and for the basis for granting a modified solid waste permit for the LFGTE System project. MP Durham appreciates the Division's review of this information, including the Revised Application. If you have any questions, please contact Dean Free, of RMT, at (608) 662-5476.

Sincerely,

RMT North Carolina, Inc.

R. Kent Nilsson, P.E.
Project Engineer

NORTH CAROLINA PROFESSIONAL SEAL 17543 ENGINEER R. KENT NILSSON
4/16/09

Attachments as stated

cc: Dean R. Free, RMT
Curtis D. Madsen, RMT
Leon LeBlanc, MP Durham
Central Files

I:\WPGVL\PJT\00-08029\01\L000802901-003.DOC

RMT

• ENVIRONMENT • ENERGY • ENGINEERING

Solid Waste Permit Modification

Landfill Gas-to-Energy System

Durham Sanitary Landfill, Durham, North Carolina

Revised April 2009

NORTH CAROLINA PROFESSIONAL SEAL 17543 ENGINEER R. KENT NILSSON

4/16/09

R. Kent Nilsson, P.E.
Project Engineer

Dean Free
Senior Environmental Consultant

Curt Madsen
Senior Project Manager

RMT North Carolina, Inc. | Durham Sanitary Landfill
Solid Waste Permit Modification

© 2009 RMT, Inc.
All Rights Reserved

I:\WPGVL\PJT\00-08029\01\R000802901-003.DOC

30 Patewood Drive, Suite 100 • Greenville, SC 29615-3535 • (864) 281-0030 • (864) 281-0288 FAX • www.rmtinc.com

CREATING BALANCE℠

Table of Contents

1. Introduction 1
   - 1.1 Engineer's Certification 1
   - 1.2 Purpose and Scope 1
   - 1.3 General Site Information 3

2. Landfill Gas-to-Energy System Design 6
   - 2.1 Existing Landfill Gas Collection System Overview 6
   - 2.2 Gas Volume Estimates 6
   - 2.3 Condensate Handling System 7
   - 2.4 Back-up Flare System 8
   - 2.5 Site Work 8
     - 2.5.1 Concrete Pads 9
     - 2.5.2 Building Structures 9
   - 2.6 Landfill Gas Conditioning 10
   - 2.7 Landfill Gas Compression 10
   - 2.8 Landfill Gas Combustion and Electrical Interconnections 10
   - 2.9 Automated Metering and Control System 11
   - 2.10 Electrical Power Needs 11
   - 2.11 Local Zoning and Inspection Permits 12
   - 2.12 LFGTE System Design 12
   - 2.13 LFGTE Design Specifications 12

3. Construction Quality Assurance/ Quality Control Program 14
   - 3.1 Introduction 14
   - 3.2 General Construction Operations 14
     - 3.2.1 Concrete Construction 15
     - 3.2.2 Electrical Installation 15
     - 3.2.3 Site Restoration 16
     - 3.2.4 Local Permitting 16
   - 3.3 Construction Documentation Report 16

4. Maintenance, Inspection, and Monitoring Plans 18
4.1 Introduction 18
4.2 Overall LFGTE System Monitoring 18
4.3 System Operations Training 19
4.4 System Operational Plan 19
4.5 Air Permitting Requirements 20
4.6 Operating Records 21

5. Post-Closure Plan Addendum 22
5.1 Amendments to the Post-Closure Plan 22
5.2 Post-Closure Cost Estimate and Financial Assurance 22

List of Drawings

Sheet 1 Site Location Map
Sheet 2 Site Work Plan – Proposed Grading Plan
Sheet 3 Piping System Plan
Sheet 4 Existing System Connections
Sheet 5 Condensate Forcemain Detail

List of Appendices

Appendix A Guidance and Correspondence
Appendix B Air Construction Permit Application
Appendix C Technical Design Information
Appendix D Approved Post-Closure Plan
Appendix E Draft Operation Plan Outline and Job Description
Appendix F Draft Equipment Specifications
Appendix G Draft Spill Prevention and Countermeasures Plan
Appendix H Draft Cost Estimate for LFGTE System Decommissioning
Appendix I Existing LFG Collection System Layout Drawing

Section 1
Introduction

1.1 Engineer's Certification

I, R. Kent Nilsson, hereby certify that I am a licensed professional engineer in the State of North Carolina, that all the information in this document is correct to the best of my knowledge, and that the proposed Landfill Gas-To-Energy System will be designed and constructed based on the best of my knowledge and information, including the data collected and supplied during the project, to meet the requirements set forth in the Solid Waste Management Rule 15A NCAC, 13B, Section .1600 of the State of North Carolina Regulations.

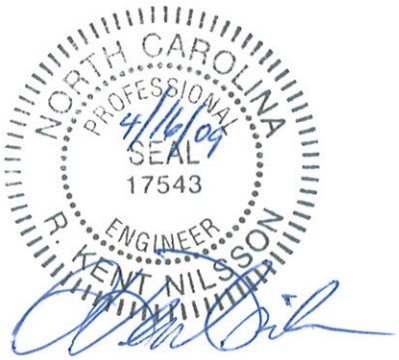

1.2 Purpose and Scope

This request for a solid waste permit modification to the Municipal Solid Waste Landfill Permit No. 3201-MSWLF-1979 has been prepared for the installation of a landfill gas-to-energy (LFGTE) system for the closed City of Durham Sanitary Landfill in Durham, North Carolina. This permit modification application has been revised ("Revised Application") and the only substantial edits are those indicated in the cover letter. Some additional references to drawings and appendices have been added. Refer to Drawing Sheet 1 for the project location map.

The landfill gas (LFG) generated by the closed Durham Sanitary Landfill and collected from the existing LFG collection system, will be conditioned and compressed by the proposed system. The LFG will then be conveyed to engine generators for combustion and conversion to electricity. The electricity will be fed to the Duke Energy electrical grid system for use by the utility. Methane Power Durham, LLC, the project developer, has entered into agreements with the City of Durham for the use of their LFG, and with Duke Energy to purchase the generated electricity. MP Durham, LLC (MP Durham) will be responsible for the daily operation, monitoring, maintenance, and repair of the LFGTE system. MP Durham will secure the services

of a local business entity to perform the required project services. The City of Durham will continue to be responsible for the existing closed landfill and its LFG collection system. However, because operation of the City's LFG collection system is closely tied to that of the LFGTE system, MP Durham has entered into a contract with the City to manage the operation and maintenance of the City's LFG collection system.

This modification request has been prepared in accordance with a guidance document titled "Permitting Guidance: Active Gas Collection Systems" (August 7, 1996), provided by the Solid Waste Section, Division of Waste Management, North Carolina Department of Environment and Natural Resources (SW-NCDENR). Refer to Appendix A for a copy of this guidance. North Carolina regulations 15A NCAC 13B .1603(a)(3) indicate that proposed modifications to the approved transition plan of the site's permit application shall be presented to the SW-NCDENR for review and approval in accordance with 15A NCAC 13B .1617(c). The transition plan was originally submitted in April 1994, with follow-on addenda, and was subsequently approved by SW-NCDENR July 29, 1996. Refer to the approval letter in Appendix A.

This modification provides the following items, which include applicable changes to approved permit documents, for review and approval by SW-NCDENR, in accordance with the provided guidance and applicable regulations:

- LFGTE system design information, including text and drawings
- LFGTE system construction quality assurance and quality control information
- Operations, maintenance, and monitoring (OM&M) plan details included in an Operations Plan

A LFGTE System Operations Plan will be prepared as part of the construction and installation activities. This approach is necessary since the final system components will continue to be refined throughout the design and installation process, along with the exact operational sequences. The Operations Plan will be a living document in that it will be continually improved as operation of the LFGTE System commences and proceeds. A draft of the System Operations Plan is currently being prepared and will be submitted to NCDENR as part of the Construction Documentation Report within 30 days following successful System installation. A preliminary outline of the Operations Plan is attached for Reference in Appendix E.

- Closure and post-closure care plan, including financial assurance responsibilities

Modifications are not proposed for the existing LFG management system well field or final cover system. Changes to the existing blower/flare station area are proposed in order to connect this existing station to the new LFGTE system, and to accept condensate that will be generated

from the operation of the new system. The LFGTE system will be designed and installed in accordance with applicable federal, state, and local regulations. The installation and operation of the LFGTE system represents an efficient, environmentally acceptable, and beneficial solid waste management practice for the closed City of Durham Landfill. The LFGTE system design and construction project is being fast-tracked to the extent possible so that the beneficial result of generating electricity can be realized as soon as possible. The current project schedule has been established to bring the system online in approximately spring to early summer 2009.

1.3 General Site Information

The authorized contacts, mailing addresses, and general information for the proposed LFGTE system are as follows:

Project title:	Solid Waste Permit Modification, Landfill Gas-to-Energy System
Authorized project contact:	Mr. Leon LeBlanc Vice President Operations MP Durham, LLC 240 Island Beach Road Wells, ME 04090 Phone: (207) 604-6964 email: leon.leblanc@yahoo.com

Landfill owner/contact:	Ms. Nancy Newell, P.E. Civil Engineer III City of Durham Department of Water Management 1600 Mist Lake Drive Durham, North Carolina 27704 Phone: (919) 560-4381 Fax: (919) 560-4479 e-mail: nancy.newell@durhamnc.gov Alternate contact: Mr. Don Greeley, P.E. Director City of Durham Department of Water Management 1600 Mist Lake Drive Durham, North Carolina 27704 Phone: (919) 560-4381 Fax: (919) 560-4479 e-mail: don.greeley@durhamnc.gov
Project Professional Engineer:	R. Kent Nilsson, P.E. RMT, Inc. 30 Patewood Drive, Suite 100 Patewood Plaza One Greenville, SC 29615 Phone: (864) 234-9436 Fax: (864) 281-0288 e-mail: kent.nilsson@rmtinc.com
Site location:	The landfill is located on the northeastern side of the City of Durham, North Carolina, west of I-85 and north of East Club Boulevard.

Electrical utility contact:	Mr. Tracey Kendrick Duke Energy/Engineering Department 4412 Hillsborough Road Durham, NC 27705 Phone: (919) 687-3139 e-mail: tlkendrick@duke-energy.com

Section 2
Landfill Gas-to-Energy System Design

2.1 Existing Landfill Gas Collection System Overview

A copy of the best available drawing showing the existing LFG collection system, titled, "Phase II Gas Extraction Plan", prepared by Malcolm Pirnie, June 1998, is included in new Appendix I of the Revised Application. This drawing shows the location of the 62 LFG extraction wells, the as-built LFG lateral and header pipe locations, the existing blower/flare location, the landfill final grades, and the proposed LFGTE System.

The LFGTE system will utilize the existing LFG collection system, including the existing wells, conveyance piping, and the condensate handling systems. The existing LFG collection system includes approximately 62 vertical LFG extraction wells spaced throughout the landfill. The wells are connected to a series of LFG conveyance piping systems, and the LFG is carried to the existing blower/flare station located at the southern end of the site, outside the limits of waste, along the main site access road. The existing blower system induces a vacuum within the waste mass to extract the LFG and to direct it to the existing enclosed ground flare for combustion. Condensate is collected throughout the collection system and is directed to the sanitary sewer system for ultimate disposal at the neighboring sanitary wastewater treatment plant.

The proposed LFGTE system components will be located immediately adjacent to the existing blower/flare station. The proposed site work will not disturb the existing landfill's final cover system or LFG collection system. The LFG collected from the landfill will be conveyed to the proposed LFGTE system, where it will be conditioned, compressed, and combusted to produce electricity. Refer to Drawing Sheet 1 for the Project Location Map.

2.2 Gas Volume Estimates

The United States Environmental Protection Agency's (USEPA's) LFG Emissions Estimation Model (LandGEM) had been previously prepared (by the City) to estimate the LFG generated throughout the life of the landfill. The LandGEM was again used as part of the Title V Air Permit Application recently submitted to the NCDENR by RMT. Refer to Appendix B for a copy of the air permit application recently submitted.

The volume of LFG being produced at the site is estimated to be between 800 and 1,500 cubic feet per minute (cfm) based on actual site data and modeling efforts. The volume of LFG extracted will vary based on site conditions, including the state of the existing collection system, the current and future maintenance performed, the operating and balancing efforts, and the

characteristics and age of the deposited waste. A study performed in 2008 (Hazen and Sawyer) indicated that the actual LFG generation rate was lower than that predicted by the LandGEM; therefore, they adjusted the generation curve. Their model estimated that, in 2009, the landfill would be generating approximately 1,300 cfm. Refer to Appendix C for the LFG generation information.

2.3 Condensate Handling System

LFG is typically saturated at the temperatures and pressures that occur within the landfill. As LFG enters the existing LFG extraction system, it cools, and the moisture in the LFG condenses and drops out of the LFG. This condensate must be removed from the LFG header piping system to prevent the liquids from impeding the flow of LFG. The condensate in the current system is removed from the LFG header pipes and is ultimately conveyed to the City's sanitary wastewater treatment plant for disposal.

Based on our most conservative calculations, the LFG collection system and the LFGTE System are anticipated to generate, at most, a combined volume of approximately 505 gallons of condensate daily. Calculations to support these estimates are attached for reference, in Appendix C of the Revised Application. Therefore, the existing 4,000-gallon condensate tank will have sufficient capacity to handle the expected condensate generation. In addition, the float-controlled dual-pump system will adequately direct the condensate to the sanitary sewer manhole. The tank includes two level-controlled condensate pumps. The condensate that will be accumulated in the holding tank will be directed by forcemain piping to the designated manhole of the sanitary sewer line that is located on City property. The sewer line will carry the condensate to the City of Durham wastewater treatment plant (WWTP), which is also located on City property, just west of the LFGTE System. It is anticipated that the forcemain piping will be approximately 4-inch–diameter inside a 6-inch–diameter high-density polyethylene (HDPE) pipe. The outside containment pipe will day-light within the existing condensate tank, and within the sanitary sewer manhole, to allow for visual observation of the containment pipe for leak detection purposes. The updated project drawings, included with this Revised Application, have been updated to include the location of the forcemain piping and the designated manhole, and to include pipe trench details. Refer to Drawing Sheet 3 for the location of the condensate handling system.

If a high condensate level alarm is activated within the main condensate tank, which also acts as a lift station, the LFGTE System will be allowed to continue to operate. However, if the alarm is not addressed within a prescribed amount of time, the operation of the LFG collection system and LFGTE System will be terminated. The two condensate vessels included with the LFG compression and conditioning skid (that discharge to the main condensate tank), also include high condensate level alarms that will terminate operation of the compression and conditioning

skids if activated. Operations personnel will be available during the typical work day, Monday through Friday, 8:00 a.m. to 5:00 p.m. and will be available on-call via pager 24/7 in accordance with the Plan of Operations. If an alarm occurs outside the work day, personnel will be notified of the alarm condition(s) by use of a telephone pager device. Based on the alarm that occurs, a decision will be made as to the appropriate response, based on the Plan of Operations.

2.4 Back-up Flare System

In the event that the LFGTE system does not function for a specified amount of time, piping, valves, and controls will be available to direct the LFG to the existing flare system for combustion. The two existing system's blowers will continue to operate as part of the new LFGTE system. One blower operates at a time and the other functions as a back-up. The new LFGTE blower will draw LFG from the discharge side of one of the operating existing blowers. If there is excess LFG that is not being used by the LFGTE system, it will also be combusted in either the existing flare system, or in a smaller flare system to be included with the new LFGTE system.

If the LFGTE system is not able to run for a period of time greater than approximately 4 hours, the system operation will revert back to the operation of the existing blower/flare station. Operations and Maintenance (O&M) personnel will be able to initiate automatic operation of the existing blower/flare systems using the blower/flare control panel on-site or the Master Supervisory Control and Data Acquisition (SCADA) system remotely. The Master SCADA system will monitor, report, and log the blower/flare systems operations. Refer to Drawing Sheet 2 for the location of the existing blower/flare station and the LFGTE system.

2.5 Site Work

The LFGTE project includes installing the following:

- Piping connections to the existing LFG collection system at the existing blower/flare station area
- Piping connections to the existing condensate handling system at the existing blower/flare station
- LFG conditioning/compression system components, including the conditioning systems, the compression systems, concrete pads, the electrical and controls systems, protective structures, and related appurtenances
- Monitoring and control connections (with SCADA) to the existing blower/flare station to control and monitor its use in a back-up role
- Electrical generation system, including engine generators to combust the LFG to generate electricity, with excess LFG being flared

- The electrical interconnection and supply systems, to operate the proposed equipment and to provide the generated power to the electrical grid, which will be coordinated with Duke Energy

The site work associated with these installations will include the following:

- Clearing and grubbing existing vegetation as necessary to facilitate grading
- Grading for positive surface drainage and preparing suitable base soil materials prior to the installation of concrete pads and buried conduits for the installation of the LFG conditioning/compression system, the engine gensets, and the electrical interconnection equipment
- Protecting existing site features and buried utilities during site work, including excavations and utility crossings
- Installing access roadways to the existing and proposed equipment in the project area to facilitate construction, operation, monitoring, and maintenance activities
- Providing sediment and erosion control during the construction activities, including restoring the ground surface areas disturbed during the work

2.5.1 Concrete Pads

Concrete pads will be designed and installed for the conditioning/compression system, for the engine gensets, and for the electrical equipment. Each pad will be placed on an engineered and compacted select granular fill foundation. The concrete pads will include reinforcement steel and will be designed for the anticipated loads.

2.5.2 Building Structures

Steel-sided structures or buildings will be installed for housing the master control center for the electrical and control systems. The structure will include various electrical and control systems, a computer system with internet connection, material storage areas, operator work space, lighting, air conditioning, and related appurtenances. The structures will be used to provide some protection of the equipment from the sun and precipitation. Similarly, structures may be installed over the LFG conditioning/ compression system, the engine gensets, and the electrical interconnection system (switch gear). The structures will be designed to meet local building code requirements, including those for wind loading. The structures will be placed on concrete footings, concrete slabs, or compacted granular soil, and will be located to protect the LFGTE system components. The structures will only be large enough to contain the necessary system components. The approximate footprint size of each system component is shown on attached Drawing Sheet 2 and 3.

2.6 Landfill Gas Conditioning

The LFG will be conditioned to remove sufficient moisture before being compressed to the necessary discharge pressure. The LFG will be taken from the discharge side of the existing blower system. Before entering the LFG conditioning portion of the system, the LFG will pass through a condensate knock-out device that includes a particulate filter. The condensate from the knock-out will be directed to the existing condensate management system at the blower/flare station for disposal. This consists of the existing buried 4,000-gallon tank with a level-controlled lift station. During compression, the LFG is further dried using an ethylene glycol chiller system. The condensate removed during the chilling process will also be directed to the existing condensate management system. All condensate generated as part of LFG conditioning and compression is collected and directed to the existing condensate handling system.

2.7 Landfill Gas Compression

The LFG compressor system, which utilizes a multi-stage centrifugal blower, will be selected to provide sufficient pressurization of the LFG, and to deliver the LFG at the proper delivery pressure to the engine gensets, which is approximately 5 pounds per square inch gauge (psig). The LFG conditioning/compression system will include all necessary appurtenances and controls, and operation will be linked with the site's Master SCADA system.

The instrumentation and controls for the LFG conditioning/compression system have been designed for safety and ease of troubleshooting. The system will shut down if the following conditions occur:

- Low inlet LFG pressure
- High blower temperature or pressure
- High heat exchanger drain level
- High particulate scrubber drain level
- High/Low delivery pressure

2.8 Landfill Gas Combustion and Electrical Interconnections

The LFG combustion system, using internal combustion engine gensets designed for LFG, will combust the LFG and generate electricity. The engine gensets will interface with the electrical and control system (SCADA) and with the electrical interconnection equipment that will feed the generated power onto the Duke Energy grid system. The interconnection equipment will be designed by the electrical interconnection contractor and will be approved by Duke Energy. The system will be designed to meet applicable regulations and will include the necessary operational and safety equipment.

2.9 Automated Metering and Control System

Overall system operation will be controlled and interlocked by a programmable logic controller (PLC) and monitored by the use of the Master SCADA system. The Master SCADA system's main control panel will be housed in a panel located within a separate structure near the LFG conditioning/compression system. The Master SCADA system will be accessible by authorized users via an on-site display or by use of the Internet. The Internet-based Master SCADA system provides live data maintenance and access, and can be queried for observation of trends, historical system reports, and for automatic alarm notifications. Additional control panels will be included for the LFGTE system as necessary to operate the other components. Electrical system components and wiring will be intrinsically-safe and applicable, and will meet local code requirements.

The metering systems that will be automated include a LFG flow meter, a LFG header pipe pressure transducer, automated monitoring systems associated with the LFG conditioning/compression system, and the flare system(s). The main LFG header pipe's flow meter provides the total cumulative flow extracted from the landfill and combusted. The flow meter will transmit the real-time flow data to the Master SCADA system, which will maintain flow records. The Master SCADA system will also track the main LFG header pipe pressure and other appropriate data to ensure proper system operation. LFG pipe pressure will indicate that the system, in general, is providing sufficient vacuum to the existing well field to extract available LFG to control migration.

The PLC and Master SCADA systems will be located on site within the electrical and control building shown on the project drawings. The exact configuration and capabilities of the electrical and control system continues to be developed. Final details will be provided in the Construction Documentation Report.

2.10 Electrical Power Needs

Duke Energy will assist with the design and supply of the electrical power needed by the LFGTE system. Electrical power is anticipated to be supplied to the proposed system from the existing transformers located near the existing blower/flare station. The electrical power used by the proposed equipment includes that for the LFG conditioning/compression system, the engine gensets, metering and controls, and associated lighting and appurtenances. In addition to interaction with Duke Energy, Methane Power Durham, LLC, has contacted the NC Utilities Commission to secure a Certificate of Public Convenience for the project.

At present, it is not anticipated that the project will include a significant off-site data storage or back-up power generation. Rather, the data gathered during operation of the LFGTE System operation will be down-loaded a minimum of once per day from the PLC systems using the

Master SCADA System. Critical data will be safe from on site natural disasters in that it will be saved to an internet-based data storage file.

The LFG collection system and the LFGTE System will cease to operate in the event that power to either system is terminated. It is envisioned that the system will be designed such that following short duration power outages, it could be restarted remotely by operations personnel. Since there are no back-up power sources, the systems will not operate unless power is provided by the utility.

The Certificate of Public Convenience has been prepared and recorded with the State of North Carolina Utilities Commission. A copy of this certificate for this LFGTE System is included in Appendix A of the Revised Application.

2.11 Local Zoning and Inspection Permits

The design information for the components and activities of the LFGTE system that are applicable to the review and approval of the local City of Durham zoning and inspection permitting process will be provided to the appropriate City entities for their action. The City approvals and permits will be forwarded to the SW-NCDENR when available and will be made part of the project's construction documentation report that will be submitted following project completion.

2.12 LFGTE System Design

Based on recent monitoring of the LFG collection system, the system is extracting between approximately 1,000 and 1,400 cfm of LFG, at 40% to 45% methane, by volume. The LFGTE System will include up to three Jenbacher engine gensets, model no. JGC-320. Each engine genset has a rated output of 1,059 KW (or approximately 1 MW), for a total potential project output of approximately 3 MWs. The base operation load of each genset unit is approximately 60 amps. The service life of the LFGTE System project is estimated to be approximately 20 to 25 years, based on projections of available methane LFG volume and service life of the operational system. The LFGTE system will be maintained to maximize its service life. Continued operation will be dependent on its rate of return over time.

2.13 LFGTE Design Specifications

Please refer to new Appendix F in the Revised Application for draft information for the LFG compression system, conditioning system, the electrical and control building, the engine gensets, and the main condensate tank/lift station pumps and floats. In addition, as this LFGTE System project is being developed as a "design-build" effort, please note that certain specific equipment and material specifications continue to be developed and refined as the project

design and procurement processes progress. Therefore, to supplement the information presented in Appendix F, the details of the final selected equipment and materials will be provided with the Construction Documentation Report.

Electrical and mechanical work, including pipe connections, will be performed following manufacturers' requirements and industry-standard practices. Work and quality control, including CQA/QC testing as required, will be performed under the supervision of registered professional engineers experienced in the specific aspects of the project. The completed project will be inspected and approved by MP Durham and the City of Durham Engineering Department in accordance with the local permitting processes.

The concrete design information has been drafted and is provided as a single drawing in new Appendix F to the Revised Application. The concrete design information includes foundation sizes and specifications.

The updated project drawings show the proposed site contours that will serve as the basis for the LFGTE project area. The western area of the proposed LFGTE System will require placement of fill soil to reach design grades. The updated drawings include storm water management features as required by the City of Durham.

Section 3
Construction Quality Assurance/ Quality Control Program

3.1 Introduction

This section presents general construction quality assurance/quality control program (CQA/QC program) information that will be employed during the construction of the LFGTE system. Prior to beginning construction activities that involve the mobilization of heavy equipment or soil excavation, buffer zones and setbacks will be established. Buffer zones will be clearly marked with stakes, flagging, erosion control fencing, and/or temporary fencing. The buffer zones between construction areas and adjacent perimeter areas will be established to prohibit improper access by non-project personnel.

The construction of the LFGTE system will be documented under the supervision of one or more professional engineers, based on applicable discipline, registered in the State of North Carolina, as the Project P.E. A registered P.E., or a qualified professional under the direct supervision of a Project P.E., will be present during key aspects of the implementation of the project as a CQA/QC Officer. Some of these activities may include site work preparations, grading and soil compaction efforts, the LFG and condensate piping connections to the existing system, flare modifications, and installations of the LFG conditioning/compression system, the engine gensets, the electrical interconnection, and the electrical and control system.

A CQA/QC Officer will be responsible for observations, testing, and other activities required to be implemented as part of the CQA/QC program. A construction documentation report, documenting the installation of the LFGTE system, will be prepared and submitted to SW-NCDENR following project completion and successful LFGTE system successful startup.

3.2 General Construction Operations

The area designated for the installation of the LFGTE system will be prepared to meet applicable local permitting requirements for storm water runoff management, safety, and accessibility. Existing site features and landfill components will be protected from site work activities. The area will initially be rough-graded to provide for sufficient work area platforms. The area will be surveyed and graded to establish the locations of the concrete pads and the system components, the electrical components, access, utilities, and positive surface water drainage. Existing soil that is not structurally sound will be removed and replaced with suitable compacted soil. Suitable base soil foundation will be necessary to support the concrete

pads and the site access roads, as well as the construction equipment. Fill soil will be tested by visual observation of compactive efforts and proof-rolling in accordance with project specifications.

The site work preparations for the LFGTE System will result in a net gain of soil. Soil fill is needed in the western part of the project to provide a level work area for the installation of System equipment. The soil fill will be selected to provide suitable structural support for the LFGTE System concrete slabs and vehicular access. Therefore, limited soil volumes will be hauled away from the project site. Waste soil requiring off-project disposal will be placed in a City-approve manner on adjacent City property at a location approved by the City, if possible. If necessary, excess soil will be transported off-site and placed at a proper fill site.

Construction wastes will be managed using roll-off waste containers and wastes will be properly disposed of off site. Recycling of waste materials will be practiced to the extent practicable.

3.2.1 Concrete Construction

Proposed concrete mix designs, concrete reinforcement requirements, and the use of prefabricated structures will be submitted to a Project P.E. for approval prior to installation.

- **Prefabricated structure** - Prefabricated structures will be inspected by a CQA/QC Officer for manufacturing defects. Defective structures will not be used. A CQA/QC Officer will document that prefabricated structures used for construction conform to the design requirements.
- **Cast-in-place structures** - Concrete for these structures, including reinforcement material, will be tested and inspected in accordance with the project specifications. The concrete specifications are included in new Appendix F to this Revised Application.

3.2.2 Electrical Installation

Duke Energy will provide design and construction support for the LFGTE system electrical power needs. Duke Energy will supply electrical power as needed to the project area, including that for the LFG conditioning and compression system, the metering and controls, the back-up blower/flare system, and associated lighting and appurtenances. The LFGTE system installation will include installation of the required foundations for the electrical system components, including that for ground-based transformers. Electrical and control systems will be designed and installed by qualified

project contractors and will meet applicable federal, state, and local electrical requirements.

3.2.3 Site Restoration

Following installation of the LFGTE system, the project areas disturbed during construction will be restored. Proper surface water drainage will be maintained as part of restoration. Restoration will include grading, fertilizing, seeding, and mulching of disturbed areas. Seed mixes will be selected as approved by the City of Durham facility manager. Erosion matting, ditch checks, and silt fencing will be installed as appropriate to control erosion while vegetation is being re-established. Gravel access and roadways will be extended as necessary to LFGTE system components to facilitate access for operations, monitoring, and maintenance activities.

3.2.4 Local Permitting

Copies of the City of Durham-approved local permits will be provided to the Division as soon as they become available. The submitted documents are currently being reviewed by the City. The storm water management practices are included on the revised project drawings and in the SPCMP included in new Appendix G to the Revised Application. A copy of the final approved and issued City Permits will be included in the Construction Documentation Report for the project.

3.3 Construction Documentation Report

Each CQA/QC Officer will complete, at a minimum, a daily summary report prepared that will include the following:

- Date
- Description of the weather conditions
- Description of the construction that occurred
- List of equipment and the name of the personnel on the project
- List of any meetings held and the names of attendees
- Description of all materials used and references or results of the testing and documentation of such material
- Calibration and recalibration of applicable equipment
- Daily inspection information from each inspector present
- Photographic records of construction activities will be maintained

Construction project meeting minutes, project-related correspondences, and project QA/QC testing reports will be included in the Construction Documentation Report. Upon completion of the work, a Project P.E. will submit a construction documentation report to the City of Durham (Landfill Owner) and the SW-NCDENR. The report will summarize the activities of the project, and will document the construction activities achieved in accordance with the engineering design. A Project P.E. will state in the report that the installation was completed in accordance with the CQA/QC program. At a minimum, the report will contain the following:

- A certification by a Project P.E. that the construction has been completed in accordance with the engineering design and approved permits
- A description of any deviations from the originally submitted design documents
- Record drawings

Upon completion of the project, the System Operations Plan for the completed LFGTE System will include the LFG conditioning and compression systems, LFG combustion and electrical generation systems, the metering and controls (PLC and SCADA), the back-up blower/flare systems, the electric and control systems, and other relevant information. This information will be included in the operating records for the project and a copy will be maintained in the electrical and control building on the site. Updated project component specifications will also be included in the Construction Documentation Report.

Copies of the City of Durham local approvals and permits granted to the LFGTE System project will be included in the Construction Documentation Report and in the System Operations Plan as appropriate. The System Operations Plan will include details regarding contingencies and responses to operational issues of concern that may develop during System operations.

The Construction Documentation Report, with the as-built drawings, will be prepared and submitted within 30 days of completion of LFGTE System installation and the initiation of full-time System operation. It is anticipated that the initial operation and shake-down period may result in minor System changes. The resulting final System configuration and components information will be critical to the final documents prepared for the Construction Documentation Report and the Operations Plan.

Section 4
Maintenance, Inspection, and Monitoring Plans

4.1 Introduction

The maintenance, inspection, and monitoring plans prepared and submitted as part of the landfill's Post-Closure Plan (April 1994) do not change with respect to the existing system. A copy of the approved Post-Closure Plan is attached in Appendix D. The existing system activities will continue to be followed to the extent applicable going forward. The existing documents do not include sections regarding an LFGTE system; therefore, this section provides information for the additional efforts that will be necessary for the LFGTE system.

Maintenance, inspection, and monitoring efforts are necessary for the efficient performance of the LFGTE system, in accordance with agreed-upon requirements. General monitoring activities are described below.

4.2 Overall LFGTE System Monitoring

Periodically, the entire existing LFG collection system will be monitored and balanced to maximize proper operation. Only trained personnel, with the proper experience and equipment, will perform system monitoring and balancing. These efforts will be critical to supplying suitable LFG to the LFGTE system while balancing migration control efforts. The closed landfill and its systems will continue to be operated to meet the landfill migration requirements of 15A NCAC 13B.1626(4).

The LFG collection system components will be routinely inspected by monitoring personnel, at a minimum frequency based on the component's monitoring schedule, to verify proper operation. System components will typically be inspected at the time monitoring or maintenance takes place. Inspections and maintenance of the system will be required to keep it operating properly and efficiently.

The frequency of monitoring will vary depending on the consistency of LFG generation. The Master SCADA System will continuously monitor and report specified operating data. The Master SCADA System will be Internet-based. Operating personnel will be able to evaluate operating parameters on an as-needed basis, and the system will automatically notify operating personnel when specified alarm conditions occur. The Master SCADA system will provide the current values of key parameters and will log specific key parameter data and record it at specified frequencies. The key parameters are as follows:

- The status of which systems are operating (LFG conditioning/LFG compression, blowers, flares, engine gensets, electrical interconnections, etc.)
- The key operating conditions of the LFG conditioning/compression system and of the engine gensets
- The flare combustion temperature
- The total LFG flow rate
- The total vacuum pressure being applied to the landfill
- The overall methane content of the LFG
- The specific parameters required by the LFG conditioning and compression system

A detailed Maintenance, Inspection, and Monitoring Plan for the LFGTE system will be developed during the construction phase of the project and will be provided to the SW-NCDENR with the construction documentation report. The detailed plan will include that information which is specific to the actual components, equipment, and instrumentation installed. The plan will include contingency and response plans for anticipated and unanticipated operational issues, including emergencies.

Copies of the City of Durham local approvals and permits granted to the LFGTE System project will be included in the Construction Documentation Report and in the System Operations Plan as appropriate. The System Operations Plan will include details regarding contingencies and responses to operational issues of concern that may develop during System operations.

4.3 System Operations Training

The operations personnel that will be responsible for the LFG collection system and the LFGTE System will have demonstrated experience in operating, inspecting, maintaining, monitoring, balancing, and other pertinent duties related to the systems. The operations personnel will be selected and hired by MP Durham and will be trained in the specifics of the LFG collection system and the LFGTE System, including operational safety and emergency planning, prior to initiating their duties. A draft of a general job description for a "Closed Landfill Gas Technician" is included in new Appendix E for reference. MP Durham will use this general description as a basis for their selection of operations personnel.

4.4 System Operational Plan

The operation of the LFGTE system is proposed to be continuous to maximize the energy produced and distributed to the local utility (Duke Energy). Operation staff will typically be monitoring the operation of the system in-person during typical work day periods. When not

on site, operations personnel will be available 24/7 to be automatically notified by use of a telephone pager by the systems when specific alarm conditions occur. The system operations can also be interrogated through a computer internet connection. The internet connection may be used to observe current system status and to make system adjustments.

A Final Gas Control and Monitoring Plan (GCMP) for the LFG collection system and the LFGTE System will be prepared to supplement the existing plan that was approved by NCDENR on July 29, 1996 (included in Appendix D of the Revised Application). The Final Gas Control and Monitoring Plan will be included as part of the System Operations Plan. The System Operations Plan will be prepared during LFGTE System installation and the draft document will be submitted to NCDENR as part of the Construction Documentation Report. The System Operations Plan will be updated during System operations, and a current copy of the Plan will be maintained onsite in the Electrical and Control Building for reference and inspection.

As an initial step, however, a Draft outline of the proposed GCMP has been developed to indicate the activities that will be necessary for proper operation of the LFG collection system and the LFGTE System. This Draft outline is included in new Appendix E of the Revised Application with the draft outline of the Operations Plan.

A Safety Plan, including a safety training plan and emergency response plan for use by both management and operations personnel, will be included as part of the System Operations Plan prior to project implementation. Safety training will be provided by MP Durham, MP Inc., to MP Durham project engineers and operations personnel before the start of system operations. Safety training will include that for general operations, trenching, confined space, electrical safety, inspections, monitoring, maintenance, and emergency situations. Emergency situations may include leaks, system malfunctions or damage, fires and explosions. Inspections for leaks and spills, and spill response procedures, have been developed for the City of Durham Storm Water Division permitting process in a document titled, the Spill Prevention and Countermeasures Plan (SPCMP). A copy of the final SPCMP will be included in the Operations Plan following City review and approval.

The Operations Plan will include MP Durham Management and project staff contact and communications information, inspection requirements, emergency prevention and training details, monitoring and sampling plans, and other key operations plans. A preliminary outline of the Operations Plan is included in the Revised Application as new Appendix E for reference.

4.5 Air Permitting Requirements

A permit application for the Air Permit for the LFGTE System was prepared and submitted by RMT to NCDENR Bureau of Air Management on December 17, 2008. The Air Quality Permit

was then issued by the Division of Air Quality, NCDENR, on February 18, 2009, and is included in Appendix B of the Revised Application. A copy of the permit will also be included with the Construction Documentation Report and will be maintained as part of the LFGTE System Operations Plan.

The landfill is not a "major source" for air permitting and is not required to control LFG under NESHAP rules. Therefore, the landfill, and the associated LFG collection system and the LFGTE System, is not required to have a Startup, Shutdown, and Malfunction (SSM) Plan as part of operations.

The air permit that was in place prior to the start of the LFGTE System design was issued by the Division of Air Quality, NCDENR, on March 16, 2007. This permit is indicated as being valid until February 29, 2012. A copy of this permit is provided in Appendix B for your information.

4.6 Operating Records

All records of operation, maintenance, inspection, and monitoring of the LFGTE System, and data from the System's automated metering and control systems, will be retained at the facility and in internet-based storage files, in accordance with Rule .1626(10). The data will be available within the electrical and control building on the master computer or in hard-copy format. Duplicate copies of operations data will be periodically prepared and maintained at an off site location designated by MP Durham.

Section 5
Post-Closure Plan Addendum

5.1 Amendments to the Post-Closure Plan

The Closure and Post-Closure Plan, submitted in April 1994, and followed by subsequent Addenda, was approved by the SW-NCDENR on July 29, 1996. A copy of the approved Post-Closure Plan is attached in Appendix D. These documents provided the agreed-upon requirements to be performed during the closure and post-closure care periods at the landfill. The landfill is now in its post-closure care period of operation, and the activities presented in the approved plans remain unchanged. This LFGTE project adds new equipment and infrastructure to the existing LFG management systems to beneficially utilize the LFG to generate electricity. And, as a result, additional activities are necessary to properly maintain proper operation of the proposed systems.

This section has been prepared to provide additional information to addend the existing Post-Closure Plan for the inclusion of the LFGTE system and its components. The following aspects of the Post-Closure Plan are discussed as part of this submittal:

- The inspection plan
- The maintenance plan
- The monitoring plan

Post-closure maintenance and monitoring activities are discussed in the previous sections of this modification request. Inspections, monitoring, and maintenance will be performed routinely to meet the equipment manufacturer's recommendations to maintain warranties and the longevity of equipment operation. Operations will be maintained to maximize the sale of electricity and to provide sufficient vacuum to the existing landfill collection system to control migration and emissions.

5.2 Post-Closure Cost Estimate and Financial Assurance

A post-closure cost estimate was originally prepared as part of the Post-Closure Plan. The cost estimate indicates the amount of money that was determined necessary on an annual basis to meet landfill post-closure obligations in accordance with 15A NCAC 13B.1627(d) and .1628. The City of Durham continues to financially assure the post-closure care period with annual updates to the determined dollar value. The installation and operation of the proposed LFGTE system is not included as part of this process. If operation of the LFGTE system is terminated,

the existing LFG collection system will continue to operate as originally intended. Financial assurance for maintaining the LFGTE system is currently under negotiation between the City and MP Durham, LLC.

Operation of the LFGTE System will be systematically reduced in magnitude as the landfill's LFG generation rate declines over time. The LFGTE System is anticipated to utilize three engine gensets initially. Each genset will utilize approximately 300 to 350 cfm of LFG during operation. As the LFG generation rate declines, System operation will eventually transition to the operation of two gensets, and ultimately one genset based on the amount of available LFG. Once the LFG generation rate is insufficient for the operation of one engine genset, or economics become unfavorable, operation of the LFGTE system will be terminated. At that time, the blower and flare will be utilized to extract and combust the LFG that remains available. When operation of the LFGTE System ends, the responsibilities of the operation of the LFG collection system will revert back to the City of Durham and MP Durham's involvement will cease. The operation of the LFGTE System is anticipated to operate for a period of approximately 20 years.

A draft cost estimate for the decommissioning of the LFGTE System and restoration of the site has been prepared for the enclosed Revised Application. The activities associated with the decommissioning include disconnection of LFGTE System equipment from the LFG collection system and from the electrical utility grid, and removal of applicable equipment from the site. For purposes of the decommissioning cost estimate, the concrete pads associated with the LFGTE System will be demolished, removed from the site and disposed of. The electrical and control building is assumed to remain at the site (following LFGTE System operations) for use by the City as part of continued operation of the LFG collection system. The draft cost estimate is included as a new Appendix H of the Revised Application. The draft cost estimate is currently being evaluated by the City of Durham. The final estimate will be submitted to NCDENR in the Construction Documentation Report.

PLOT DATA
Drawing Name: J:\08029\01\80290110.dwg
Operator Name: FIEBRANT Scale: 1"=1'

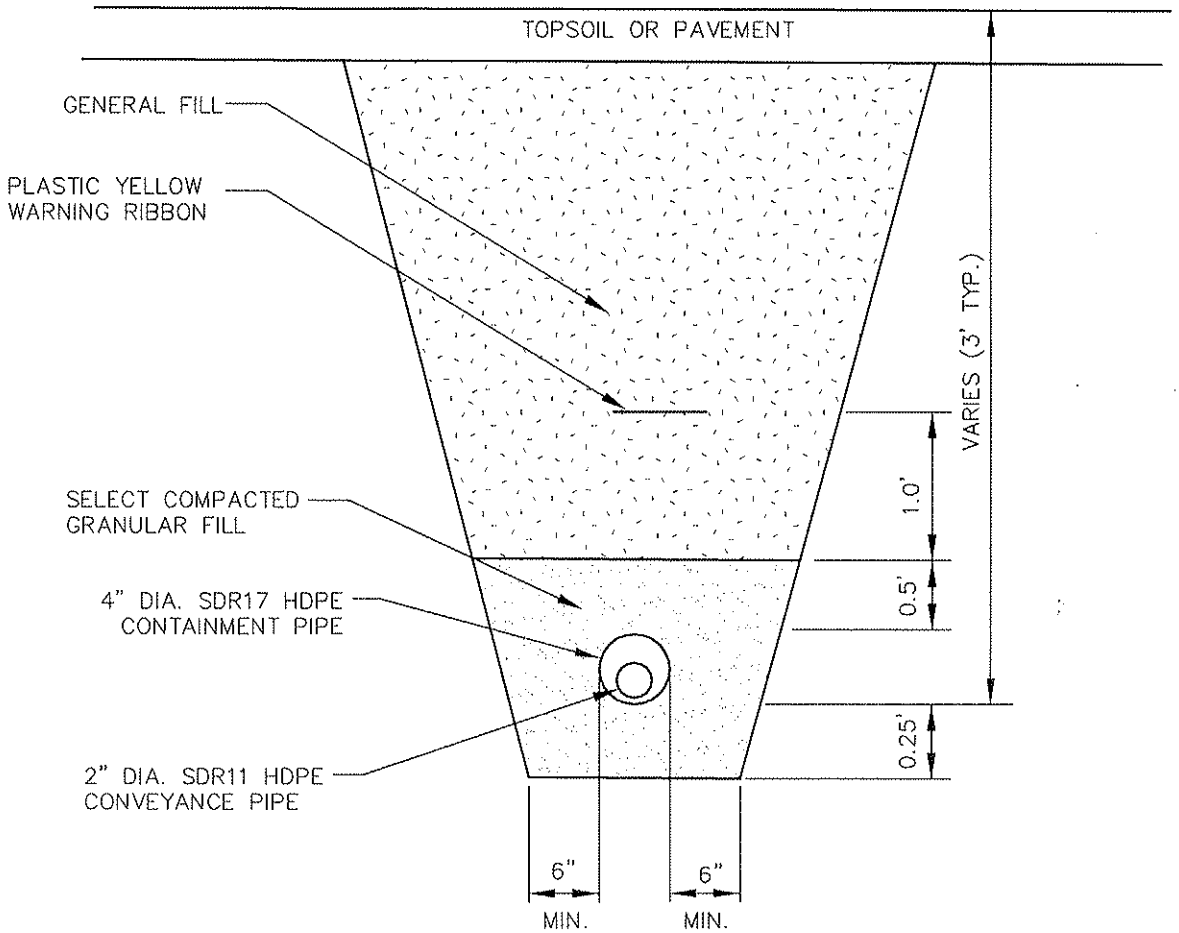

CONDENSATE FORCEMAIN PIPE TRENCH DETAIL (TYP.)

(NOT TO SCALE)

RMT

DURHAM LANDFILL
GAS-TO-ENERGY FACILITY
DURHAM, NORTH CAROLINA

CONDENSATE FORCEMAIN DETAIL

DRAWN BY:	TAF
APPROVED BY:	DRF
PROJECT NO.	08029.01
FILE NO.	80290110.DWG
DATE:	APRIL 2009

Appendix A
Guidance and Correspondence

August 7, 1996

PERMITTING GUIDANCE: ACTIVE GAS COLLECTION SYSTEMS

TO: Municipal Solid Waste Landfill Owners and Operators, Consultants, and Interested Parties

FROM: Solid Waste Section, Division of Waste Management

DISCUSSION: Owners, operators and vendors have contacted the Solid Waste Section (Section) regarding clarification of rules and requirements for active gas collection systems at municipal solid waste landfills (MSWLFs). Active gas collection systems are installed at MSWLFs for a variety of reasons, including the following:

In response to an operational violation of 15A NCAC 13B .1626(4), which requires a remediation plan for methane gas releases or as a preventive measure to ensure compliance with the rule.

As an element of the closure system required by 15A NCAC 13B .1627(c)(3)(B), which requires a gas venting or collection system below the low-permeability barrier to minimize pressures exerted on the barrier.

In response to the new emissions guidelines for MSWLFs regulated under the Clean Air Act, as recently amended.

Please note that pursuant to 15A NCAC 13B .1603(a)(3), an owner and operator proposing changes to the construction, operation, closure, and post-closure plans approved in the MSWLF permit shall request prior approval from the Section in accordance with 15A NCAC 13B Rule .1617(c).

PERMIT MODIFICATION REQUIREMENTS: Submittal of the following information and Section approval is required prior to the installation of an active gas collection system:

1. Submittal of a conceptual plan for placement of gas wells, blowers, flares or other control devices, and proposed location of related infrastructure.
2. Plan for disposal of gas condensate. Pursuant to .1626(9)(a)(ii), gas condensate derived from a MSWLF unit may not be placed in the unit unless the unit is designed with a composite liner. Requests or proposals for recirculation of gas condensate in MSWLF units designed with a composite liner and leachate collection system as described in Rule .1624 must be included in the submittal.
3. A modification to the operations plan which includes a detailed emergency response plan for a landfill fire. The plan should include provisions to train landfill employees in the proper response to a fire, specifically steps to be taken concerning the gas collection system.

4. A modification to the operations plan describing how the installation and presence of the gas collection system will be coordinated with the operation of the MSWLF unit.
5. A modification to the operations plan describing the routine maintenance requirements of the gas collection system.
6. A modification to the closure plan describing how the installation and presence of the gas collection system will be coordinated with the closure of the MSWLF unit. Plan should include proposed well design, engineering details concerning penetration through the final cover system, and provisions for maintenance and repair of the closure cap system should it become damaged during the operation, installation, or repair of the gas system.
7. A plan defining the steps necessary to decommission the wells at the end of their useful life.
8. All necessary approvals and permits from the Division of Air Quality.
9. Revisions to the closure and post-closure cost estimates for financial assurance.

Following installation of the gas collection system, as-built drawings and an engineering report sealed by a Professional Engineer registered in the State of North Carolina shall be submitted to the Section in accordance with the requirements of (1) above.

FINANCIAL ASSURANCE: The installation of an active gas collection system, regardless of the reason and timing of installation has ramifications for the closure and post-closure requirements for the MSWLF facility. Please note that in accordance with Rule.1628, financial assurance for a MSWLF is the responsibility of the facility owner and operator.

OSURE

Systems proposed for installation at closure, or additions to an active system required by closure must be included in closure cost estimates. (i.e. additional wells or vents that may be installed when the cap system is put in place, adjustments to blowers, flares, etc.)

POST-CLOSURE

The costs for post-closure operation, maintenance, and decommissioning of the landfill gas system must be included in the post-closure cost estimates for the facility.

The closure and post-closure cost adjustments must be submitted with the permit modification application for approval by the Section and placed in the facility operating record in accordance with .1628(a)(4) and (5). Financial assurance mechanisms must be updated on the next anniversary of their filing.

If there are any questions, please contact the permitting engineers in either the Raleigh Central Office or the Winston-Salem and Fayetteville Regional Offices.

State of North Carolina
Department of Environment,
Health and Natural Resources
Division of Solid Waste Management

James B. Hunt, Jr., Governor
Jonathan B. Howes, Secretary
William L. Meyer, Director

DEHNR

July 29, 1996

Ms. Nancy Newell, P.E.
Solid Waste Process Engineer
City of Durham
1833 Camden Avenue
Durham, NC 27704

Re: Full Approval of the Transition Plan for the Durham County MSW Landfill, Permit Number 32-01

Dear Ms. Newell:

The Division of Waste Management has completed its review of the Transition Plan for the referenced landfill submitted by the consultant, Malcom Pirnie, on behalf of the owner and operator, Durham County.

Rule .1603(a)(4)(A) of the Solid Waste Management Rules codified at 15A NCAC 13B requires the owner and operator of an existing MSWLF unit to submit a Transition Plan application for continuing operation and closure of the existing MSWLF unit by April 9, 1994. Rule .1617(d) requires that the plan contain: an operation plan in accordance with Rule .1625, a closure and post-closure plan in accordance with Rule .1629, a water quality plan in accordance with .1623(b)(3), and a report that contains a schedule for closure of the existing MSWLF unit and, if necessary, submittal of an application for a new facility, a lateral expansion or permit renewal.

Rule .1603(d)(2) requires the Division to establish a review schedule for the Transition Plan applications which determines the adequacy of all the plans by October 9, 1996. The rule allows the Division to issue full or partial approvals and to determine the schedule for closure of the existing MSWLF unit based on its review of the complete transition plan application.

In accordance with Rule .1603(d)(2), the Division has completed its review of the submitted application as amended through July 23, 1996, and hereby issues full approval of the Transition Plan for the referenced landfill.

The approved Transition Plan shall be effective through December 1997, or until the permitted contours are reached. Rule .1625(b)(3)(C) requires that operation drawings illustrate annual phases of development which are consistent with the minimum and maximum closure slope requirements. In accordance with this rule and Rule .1627(c)(10)(A), the existing unlined MSWLF unit shall be operated in such a manner as to cease receiving solid waste on or before

P.O. Box 27687,
Raleigh, North Carolina 27611-7687
Voice 919-733-4996

Reduce Reuse Recycle

FAX 919-715-3605
An Equal Opportunity Affirmative Action Employer
50% recycled/10% post-consumer paper

January 1,1998, regardless of the approved final contours.

If there are any questions or comments, please contact Greg Eades @ (919) 733-0692, extension 344.

Sincerely,

James C. Coffey

James C. Coffey, Head
Permitting Branch
Solid Waste Section

cc: Dexter Matthews, SWS
Terry Dover, SWS
Mark Fry, SWS
Richard Stahr, P.E., Malcom Pirnie

NCDENR

Dee Freeman., Secretary

Solid Waste Section

January 15, 2009

Ms. Nancy Newell, P.E.
Department of Water Management, City of Durham
1600 Mist Lake Drive
Durham, NC 27704

Re: Comments on Solid Waste Permit Modification (Application) – Landfill Gas-to-Energy (LFGTE) System, Durham Sanitary Landfill, Durham County, North Carolina
Permit No. 32-01, Document ID No. 6368

Dear Ms. Newell:

The Division of Waste Management (the Division) has received the above-referenced Application on December 5, 2008 and conducted a review of compliance with the Solid Waste Management Rule (Rules), 15A NCAC 13B .1600. The Solid Waste Section requests the following additional information:

General

1. Please provide the signed, sealed, & dated Engineer's Certification in the Application which states the proposed LFGTE system is designed, based on the engineers' best knowledge and information, and data collected and supplied, to meets the requirements in accordance with the Solid Waste Management Rule 15A NCAC 13B Section .1600. Additionally, drawings shall bear the seal of the project engineer who is registered in the State of North Carolina in accordance with the requirement stated in Rule .1603(b).

Section 1 – Introduction

2. (the first paragraph in Section 1.1) The Division knew that MP Durham LLC leased the property from the City of Durham for developing this LFGTE project but does not clearly understand which party will conduct the daily operation of the LFGTE system. Please clarify.

3. (the third paragraph in Section 1.1) The Application does not include an Operations Plan depicting the operation and maintenance the proposed LFGTE system. Please revise the Section 4 accordingly.

Section 2 – Landfill Gas-To-Energy System Design

4. In addition to describing the estimated methane gas volume, please also submit data of the estimated service life of the LFTGE project, the designed peak and average operation loads, and projected power outputs provided by the LFTGE system.

5. (Section 2.3) This Section proposes that "if the condensate tank operations fail, a high level alarm will result. Operation personnel will be automatically notified." Will this proposal suggest that there will be a 24-hour and 7-day on-call operational personnel on duty at the closed landfill facility? Please clarify.

6. (Section 2.3) Are there any data and calculations to support the proposal that the existing 4000-gallon condensate tank has sufficient capacity to accommodate the additional condensate generated from the LFGTE processes? Please clarify.

7. (Sections 2.3 & 2.6 and Drawing Sheet 2 of 3) On Drawing Sheet 2 of 3 please provide the layout of the proposed condensate lines which convey condensate from the proposed LFGTE system to the existing underground condensate tank. The typical details of trenching and piping (LFG and condensate lines) and piping connections and fittings need to be present on drawing as well. Please revise the drawing accordingly.

8. What are the operation hours of the proposed LFTGE system? If the system is an automatic-un-manned-24-hours-per-day operation system, how will the operation staff be promptly notified to properly respond any potential incidents such as the condensate spill (in Section 2.3) and the malfunction of the LFGTE system (in Section 2.4), or a fire/ an explosion? Please clarify.

9. (Section 2.8) Is there a plan to address the fire safety training and prevention issues, fire fighting equipment readiness and routine inspection requirements, explosive gas monitoring and sampling plan, emergency communication systems– internal and external?

10. (Section 2.9) Where are the PLC and Master SCADA system located? If they are housed on-site, please note their locations on related drawings.

11. (Section 2.9) Will there be a back-up (off-site) data storage system and stand-by generators available for this project? In the event of power outrage or a natural disaster (flood, fire, etc.), how will the metering and control system be functioning? Please clarify.

12. All records of operation, maintenance, inspection, and monitoring LFGTE system and data from the automated metering and control system must be properly retained at the facility or an alternative location near the facility in accordance with Rule .1626 (10). Please add this requirement to the section.

13. (Section 2.10) A copy of the Certificate of Public Convenience for this proposed LFGTE need to be included the Construction Document Report stated in Section 3.3.

Section 3 – Construction Quality Assurance/Quality Control (CQA/QC) Program

14. Please provide the specifications (including, but not limited to, material, equipment/device, machinery, construction procedures, QA/QC testing, etc.) of tasks mentioned in the Sections 2.5 through 2.9 and the activities described in the Sections 3.1 through 3.2 in the CQA/QC program.

15. (Section 3.2) Where and how are the excessive earthen material and construction wastes disposed of, if present, during the construction and after the entire LFGTE construction is completed? Please clarify.

16. (Section 3.2.3) Please provide the City Durham-approved erosion and sediment control plan and related drawings to show BMPs locations and details.

17. (Section 3.3) The meeting minutes, project-related correspondences, and QA/QC testing reports must be included in the Construction Document Report. Please add this requirement to the section.

18. (Section 3.3) Has the *Startup, Shutdown, and Malfunction (SMM) Plan* submitted to the Division of Air Quality for a review and approved? If so, please provide the approved plan in the Construction Document Report.

19. (Section 3.3) Upon completion of the project, the Operation and Maintenance Plan/Manual for the as-built LFGTE system components – gas conditioning and compression system, gas combustion and generator system, the metering and controls (PLC), the back-up blower/flare system, the electric and control (SCADA) system shall be placed in the operating records . Please add this requirement to this section.

20. (Sections 2.11, 3.3 & 4.2) To be consistent with the proposal stated in Sections 2.11 & 4.2, please add the approval document of zoning and inspection permit issued by the City of Durham, the "*Maintenance, Inspection, and Monitoring Plan*" and *Contingency and Response Plan* to the Construction Document Report.

21. (Section 3.3) Please provide a time frame for submitting the completed Construction Document Report with as-built drawings to the Division.

Section 4 – Maintenance, Inspection, and Monitoring Plans

22. A gas control and monitoring plan specifically designed for this LFGTE system needs to be prepared and submitted the Division for a review and approval. The gas control and monitoring plan stated in Appendix D is not adequate and applicable for this new LFGTE system during the operating period. Please refer the Rule .1626 for preparing the gas control and monitoring plan.

23. (Section 4.2) Please provide the qualification of the "trained personnel" to perform system monitoring and balancing.

Section 5 – Post- Closure Plan Addendum

(Section 5.1) The Application needs to discuss how to manage or decommission the proposed LFGTE system when the LFG reaches the end of the service life. Please also provide a cost estimate for decommission the system and restoration of site to the Division.

Appendix B – Air Construction Permit Application

24. Please provide the Division a copy of air quality permits – NSPS/EG, Title V, MACT, NSR or PSD which are applicable to this LFGTE project. The air quality permit for the existing landfill gas collection and control system (LFGCCS) expired on July 31, 2002.

Appendix D – Approved Post-Closure Plan

25. (Section 3.1) The post-closure contact for the landfill facility is out-of-date. Please provide the revised contact information.

Drawings

26. Please provide a site-wide drawing to show the locations of the 62 landfill gas wells (refer to Section 2.1), the existing landfill gas collection and control system (LFGCCS), and the facility existing conditions

Please incorporate requested information, document, revisions, and responses to a new submittal including a written hard copy and an electronic copy (including figures) of the revised Application. The Solid Waste Section appreciates your efforts and cooperation in this matter. If you have any questions or would like to schedule a meeting to discuss this matter further, please contact me at (919) 508- 8507.

Sincerely,

Ming-Tai Chao, P.E.
Environmental Engineer II
Solid Waste Section

cc: Dean R. Free, RMT North Carolina, Inc.
Ed Mussler, DWM
Leon LeBlanc, MP Durham, LLC
Donna Wilson, DWM

Chris Marriott, DWM
Central Files

Jason Watkins, DWM

ORIGINAL

STATE OF NORTH CAROLINA
UTILITIES COMMISSION
RALEIGH

FILE COPY

DOCKET NO. SP-368, SUB 0

BEFORE THE NORTH CAROLINA UTILITIES COMMISSION

In the Matter of		
Application of MP Durham, LLC, for a Certificate of Public Convenience and Necessity to Construct a 3.18 MW Electricity Generating Facility to be Located at 2115 East Club Boulevard, Durham, North Carolina	)	ORDER ISSUING CERTIFICATE OF PUBLIC CONVENIENCE AND NECESSITY

BY THE COMMISSION: On November 17, 2008, MP Durham, LLC (Applicant), filed an application with the North Carolina Utilities Commission seeking a certificate of public convenience and necessity pursuant to G.S. 62-110.1(a) for construction of a 3.18 MW electricity generating facility to be located at 2115 East Club Boulevard, Durham, North Carolina, north of the intersection of East Club Boulevard and Glenn Road, approximately one-half mile west of I-85, adjacent to the closed Durham City Landfill. It will be fueled by landfill methane gas from the Durham City Landfill. The Applicant plans to sell the electricity to Duke Energy Carolinas, LLC.

On December 1, 2008, the Commission issued an order requiring the Applicant (1) to publish a notice of the application in the manner required by G.S. 62- 82(a) and file an affidavit of publication with the Commission and (2) to mail a copy of the application and notice, no later than the first date that such notice is published, to the electric utility to which the Applicant plans to sell and distribute the electricity and file a signed and verified certificate of service that the application and notice have been provided to the utility. The Order specified that, if a complaint was received within 10 days after the last date of the publication of the notice, the Commission would schedule a public hearing to determine whether a certificate should be awarded. The Order further specified that, if no complaint was received within the time specified above, the Commission might, upon its own initiative, order and schedule a hearing to determine whether a certificate should be awarded, and, if the Commission ordered a hearing upon its own initiative, it would require notice of the hearing to be published by the Applicant in the newspaper in which the notice of the application was published. Finally, the Order specified that, if no complaint was received within the time specified and the Commission did not order a hearing upon its own initiative, the Commission would enter an order awarding the certificate.

On January 30, 2009, the Applicant filed a letter with the Commission that included an affidavit of publication stating that the last day of the required publishing of notice was January 1, 2009. The letter also included a signed and verified certificate of

service stating that Duke Energy Carolinas, LLC, had been provided a copy of the application no later than the first day of publication. No complaints have been received in this docket.

The Public Staff presented this item at the Commission's Staff Conference on February 23, 2009, recommending that the Commission approve the MP Durham, LLC's application and grant the requested certificate.

Based on the foregoing and the representations in the application, the Commission concludes that a certificate of public convenience and necessity should be granted.

IT IS, THEREFORE, ORDERED as follows:

1. That a certificate of public convenience and necessity should be, and hereby is, granted to the MP Durham, LLC.

2. That Appendix A shall constitute the certificate of public convenience and necessity for a 3.18 MW electric generating facility to be located at 2115 East Club Boulevard, Durham, North Carolina.

ISSUED BY ORDER OF THE COMMISSION.

This the 24th day of February, 2009.

NORTH CAROLINA UTILITIES COMMISSION

Gail L. Mount

Gail L. Mount, Deputy Clerk

Kc022309.06

APPENDIX A

STATE OF NORTH CAROLINA
UTILITIES COMMISSION
RALEIGH

DOCKET NO. SP-368, SUB 0

MP Durham, LLC,
2530 E Calle Sin Controversia, Tucson, AZ 85718

is hereby issued this

CERTIFICATE OF PUBLIC CONVENIENCE AND NECESSITY
PURSUANT TO G.S. 62-110.1

for a landfill gas-fueled generating facility with a capacity of 3.18 MW

located

adjacent to the closed landfill, north of the intersection of East Club Blvd
and Glenn Road, in the City of Durham,
in Durham County, North Carolina,

subject to all orders, rules, regulations and conditions as are now or may hereafter be lawfully made by the North Carolina Utilities Commission.

ISSUED BY ORDER OF THE COMMISSION.

This the 24th day of February, 2009.

NORTH CAROLINA UTILITIES COMMISSION

Gail L. Mount

Gail L. Mount, Deputy Clerk

Appendix B
Air Construction Permit Application

RECEIVED
MAR 21 2007
DWM DIRECTOR

NCDENR

North Carolina Department of Environment and Natural Resources

DIVISION OF AIR QUALITY

Michael F. Easley, Governor

William G. Ross Jr., Secretary
B. Keith Overcash, P.E., Director

March 16, 2007

Mr. A.T. Rolan
Director
City of Durham Sanitary Landfill
Department of Water Management
1600 Mist Lake Dr.
Durham, NC 27704

Subject: Air Permit No. 08456R02
City of Durham Sanitary Landfill
Durham, Durham County, North Carolina
Fee Class: Small
Site Number: 05/32/00296

Dear Mr. Rolan:

In accordance with your completed application received February 14, 2007, we are forwarding herewith Permit No. 08456R02 to City of Durham Sanitary Landfill, Durham, Durham County, North Carolina for the construction and operation of air emissions sources or air cleaning devices and appurtenances. Please note the records retention requirements are contained in General Condition 2 of the General Conditions and Limitations.

If any parts, requirements, or limitations contained in this permit are unacceptable to you, you have the right to request a formal adjudicatory hearing within 30 days following receipt of this permit, identifying the specific issues to be contested. Such a request will stay the effectiveness of the entire permit. This hearing request must be in the form of a written petition, conforming to G.S. 150B-23 of the North Carolina General Statutes, and filed with the Office of Administrative Hearings, 6714 Mail Service Center, Raleigh, NC 27699-6714. The form for requesting a formal adjudicatory hearing may be obtained upon request from the Office of Administrative Hearings. Unless a request for a hearing is made pursuant to G.S. 150B-23, this air permit shall be final and binding.

You may request modification of your air permit through informal means pursuant to G.S. 150B-22. This request must be submitted in writing to the Director and must identify the specific provisions or issues for which the modification is sought. Please note that the permit will become final and binding regardless of a request for informal modification unless a request for a hearing is

also made under G.S. 150B-23.

Unless exempted by a condition of this permit or the regulations, construction of new air pollution sources or air cleaning devices, or modifications to the sources or air cleaning devices described in this permit must be covered under a permit issued by the Division of Air Quality prior to construction. Failure to do so is a violation of G.S. 143-215.108 and may subject the Permittee to civil or criminal penalties as described in G.S. 143-215.114A and 143-215.114B.

This permit shall be effective from March 16, 2007 until February 29, 2012, is nontransferable to future owners and operators, and shall be subject to the conditions and limitations as specified therein.

Changes have been made to the permit stipulations. The Permittee is responsible for carefully reading the entire permit and evaluating the requirements of each permit stipulation. The Permittee shall comply with all terms, conditions, requirements, limitations and restrictions set forth in this permit. Noncompliance with any permit condition is grounds for enforcement action, for permit termination, revocation and reissuance, or modification, or for denial of a permit renewal application. Should you have any questions concerning this matter, please contact David Miller at (919) 791-4200.

Sincerely,

Ernie Fuller
Regional Air Quality Supervisor

ddm
Enclosures

c: Central Files
Raleigh Regional Office

NORTH CAROLINA ENVIRONMENTAL MANAGEMENT COMMISSION

DEPARTMENT OF ENVIRONMENT AND NATURAL RESOURCES

DIVISION OF AIR QUALITY

AIR PERMIT NO. 08456R02

Issue Date: March 16, 2007
Expiration Date: February 29, 2012

Effective Date: March 16, 2007
Replaces Permit: 08456R01

To construct and operate air emission source(s) and/or air cleaning device(s), and for the discharge of the associated air contaminants into the atmosphere in accordance with the provisions of Article 21B of Chapter 143, General Statutes of North Carolina (NCGS) as amended, and other applicable Laws, Rules and Regulations,

City of Durham Sanitary Landfill
2115 East Club Boulevard
Durham, Durham County, North Carolina
Fee Class: Small
Site Number: 05/32/00296

(the Permittee) is hereby authorized to construct and operate the air emissions sources and/or air cleaning devices and appurtenances described below:

Emission Source ID	Emission Source Description	Control System ID	Control System Description
ES-FL1	landfill gas - fired enclosed ground flare with automatic ignition and electric controls (107 million Btu/hr maximum heat input)	N/A	N/A

in accordance with the completed application 3200296.07A received February 14, 2007 including any plans, specifications, previous applications, and other supporting data, all of which are filed with the Department of Environment and Natural Resources, Division of Air Quality (DAQ) and are incorporated as part of this permit.

This permit is subject to the following specified conditions and limitations including any TESTING, REPORTING, OR MONITORING REQUIREMENTS:

A. SPECIFIC CONDITIONS AND LIMITATIONS

1. Any air emission sources or control devices authorized to construct and operate above must be operated and maintained in accordance with the provisions contained herein. The Permittee shall comply with applicable Environmental Management Commission

Regulations, including Title 15A North Carolina Administrative Code (NCAC), Subchapter 2D .0202, 2D .0516, 2D .0521, 2D .0535 and 2D .1806.

2. EMISSION INVENTORY REQUIREMENT - At least 90 days prior to the expiration date of this permit, the Permittee shall submit the air pollution emission inventory report in accordance with 15A NCAC 2D .0202, pursuant to N.C. General Statute 143 215.65. The report shall be submitted to the Regional Supervisor, DAQ. The report shall document air pollutants emitted for the 2010 calendar year. The Regional Office will send information on how to submit the emissions inventory, along with a reminder to renew your permit, about six months prior to your permit expiration. If you do not receive this information, please contact the Regional Supervisor, DAQ.

3. SULFUR DIOXIDE CONTROL REQUIREMENT - As required by 15A NCAC 2D .0516 "Sulfur Dioxide Emissions from Combustion Sources," sulfur dioxide emissions from the combustion sources shall not exceed 2.3 pounds per million Btu heat input.

4. VISIBLE EMISSIONS CONTROL REQUIREMENT - As required by 15A NCAC 2D .0521 "Control of Visible Emissions," visible emissions from the emission sources, manufactured after July 1, 1971, shall not be more than 20 percent opacity when averaged over a six-minute period, except that six-minute periods averaging not more than 87 percent opacity may occur not more than once in any hour nor more than four times in any 24-hour period. However, sources which must comply with 15A NCAC 2D .0524 "New Source Performance Standards" or .1110 "National Emission Standards for Hazardous Air Pollutants" must comply with applicable visible emissions requirements contained therein.

5. NOTIFICATION REQUIREMENT - As required by 15A NCAC 2D .0535, the Permittee of a source of excess emissions that last for more than four hours and that results from a malfunction, a breakdown of process or control equipment or any other abnormal conditions, shall:

    a. Notify the Director or his designee of any such occurrence by 9:00 a.m. Eastern time of the Division's next business day of becoming aware of the occurrence and describe:

        i. the name and location of the facility,

        ii. the nature and cause of the malfunction or breakdown,

        iii. the time when the malfunction or breakdown is first observed,

        iv. the expected duration, and

        v. an estimated rate of emissions.

    b. Notify the Director or his designee immediately when the corrective measures have been accomplished.

    This reporting requirement does not allow the operation of the facility in excess of Environmental Management Commission Regulations.

6. CONTROL AND PROHIBITION OF ODOROUS EMISSIONS - As required by 15A NCAC 2D .1806 "Control and Prohibition of Odorous Emissions" the Permittee shall not operate the facility without implementing management practices or installing and operating odor control equipment sufficient to prevent odorous emissions from the facility from causing or contributing to objectionable odors beyond the facility's boundary.

B. GENERAL CONDITIONS AND LIMITATIONS

1. TWO COPIES OF ALL DOCUMENTS, REPORTS, TEST DATA, MONITORING DATA, NOTIFICATIONS, REQUESTS FOR RENEWAL, AND ANY OTHER INFORMATION REQUIRED BY THIS PERMIT shall be submitted to the:

   Regional Air Quality Supervisor
   North Carolina Division of Air Quality
   Raleigh Regional Office
   3800 Barrett Drive
   Raleigh, NC 27609
   (919) 791-4200

2. RECORDS RETENTION REQUIREMENT - Any records required by the conditions of this permit shall be kept on site and made available to DAQ personnel for inspection upon request. These records shall be maintained in a form suitable and readily available for expeditious inspection and review. These records must be kept on site for a minimum of 2 years, unless another time period is otherwise specified.

3. PERMIT RENEWAL REQUIREMENT - The Permittee, at least 90 days prior to the expiration date of this permit, shall request permit renewal by letter in accordance with 15A NCAC 2Q .0304(d) and (f). Pursuant to 15A NCAC 2Q .0203(i), no permit application fee is required for renewal of an existing air permit. The renewal request should be submitted to the Regional Supervisor, DAQ.

4. ANNUAL FEE PAYMENT - Pursuant to 15A NCAC 2Q .0203(a), the Permittee shall pay the annual permit fee within 30 days of being billed by the DAQ. Failure to pay the fee in a timely manner will cause the DAQ to initiate action to revoke the permit.

5. EQUIPMENT RELOCATION - A new air permit shall be obtained by the Permittee prior to establishing, building, erecting, using, or operating the emission sources or air cleaning equipment at a site or location not specified in this permit.

6. This permit is subject to revocation or modification by the DAQ upon a determination that information contained in the application or presented in the support thereof is incorrect, conditions under which this permit was granted have changed, or violations of conditions contained in this permit have occurred. The facility shall be properly operated and maintained at all times in a manner that will effect an overall reduction in air pollution. Unless otherwise specified by this permit, no emission source may be operated without the concurrent operation of its associated air cleaning device(s) and appurtenances.

7. REPORTING REQUIREMENT - Any of the following that would result in previously unpermitted, new, or increased emissions must be reported to the Regional Supervisor, DAQ:

    a. changes in the information submitted in the application regarding facility emissions;

    b. changes that modify equipment or processes of existing permitted facilities; or

    c. changes in the quantity or quality of materials processed.

    If appropriate, modifications to the permit may then be made by the DAQ to reflect any necessary changes in the permit conditions. In no case are any new or increased emissions allowed that will cause a violation of the emission limitations specified herein.

8. This permit is nontransferable by the Permittee. Future owners and operators must obtain a new air permit from the DAQ.

9. This issuance of this permit in no way absolves the Permittee of liability for any potential civil penalties which may be assessed for violations of State law which have occurred prior to the effective date of this permit.

10. This permit does not relieve the Permittee of the responsibility of complying with all applicable requirements of any Federal, State, or Local water quality or land quality control authority.

11. Reports on the operation and maintenance of the facility shall be submitted by the Permittee to the Regional Supervisor, DAQ at such intervals and in such form and detail as may be required by the DAQ. Information required in such reports may include, but is not limited to, process weight rates, firing rates, hours of operation, and preventive maintenance schedules.

12. A violation of any term or condition of this permit shall subject the Permittee to enforcement pursuant to G.S. 143-215.114A, 143-215.114B, and 143-215.114C, including assessment of civil and/or criminal penalties.

13. Pursuant to North Carolina General Statute 143-215.3(a)(2), no person shall refuse entry or access to any authorized representative of the DAQ who requests entry or access for purposes of inspection, and who presents appropriate credentials, nor shall any person obstruct, hamper, or interfere with any such representative while in the process of carrying out his official duties. Refusal of entry or access may constitute grounds for permit revocation and assessment of civil penalties.

14. The Permittee must comply with any applicable Federal, State, or Local requirements governing the handling, disposal, or incineration of hazardous, solid, or medical wastes, including the Resource Conservation and Recovery Act (RCRA) administered by the Division of Waste Management.

15. PERMIT RETENTION REQUIREMENT - The Permittee shall retain a current copy of the air permit at the site. The Permittee must make available to personnel of the DAQ, upon request, the current copy of the air permit for the site.

16. CLEAN AIR ACT SECTION 112(r) REQUIREMENTS - Pursuant to 40 CFR Part 68 "Accidental Release Prevention Requirements: Risk Management Programs Under the Clean Air Act, Section 112(r)," if the Permittee is required to develop and register a risk management plan pursuant to Section 112(r) of the Federal Clean Air Act, then the Permittee is required to register this plan in accordance with 40 CFR Part 68.

17. PREVENTION OF ACCIDENTAL RELEASES - GENERAL DUTY - Pursuant to Title I Part A Section 112(r)(1) of the Clean Air Act "Hazardous Air Pollutants - Prevention of Accidental Releases - Purpose and General Duty," although a risk management plan may not be required, if the Permittee produces, processes, handles, or stores any amount of a listed hazardous substance, the Permittee has a general duty to take such steps as are necessary to prevent the accidental release of such substance and to minimize the consequences of any release. **This condition is federally-enforceable only.**

Permit issued this the 16th of March, 2007.

NORTH CAROLINA ENVIRONMENTAL MANAGEMENT COMMISSION

Ernie Fuller
Regional Air Quality Supervisor
By Authority of the Environmental Management Commission

Air Permit No. 08456R02

BOOKER PULLEN

NCDENR

North Carolina Department of Environment and Natural Resources
Division of Air Quality

Beverly Eaves Perdue
Governor

B. Keith Overcash, P.E.
Director

Dee Freeman
Secretary

February 18, 2009

Mr. Leon LeBlanc
Vice President of Operations
Methane Power Durham Landfill, LLC
240 Island Beach Road
Wells, Maine 04090

Dear Mr. LeBlanc:

SUBJECT: Air Quality Permit No. 09971R00
Facility ID: 3200375
Methane Power Durham Landfill, LLC
Durham, North Carolina
Durham County
Fee Class: Title V

In accordance with your completed Air Quality Permit Application received **December 17, 2008**, we are forwarding herewith Air Quality **Permit No. 09971R00** to Methane Power Durham Landfill, LLC, located at 2115 East Club Boulevard, Durham, North Carolina authorizing the construction and operation, of the emission sources and associated air pollution control devices specified herein. Additionally, any emissions activities determined from your Air Quality Permit Application as being insignificant per 15A North Carolina Administrative Code 2Q .0503(8) have been listed for informational purposes as an "ATTACHMENT." Please note the requirements for the annual compliance certification are contained in General Condition P in Section 3 of Part I. **The current owner is responsible for submitting a compliance certification for the entire year regardless of who owned the facility during the year.**

The Permittee shall file a Title V Air Quality Permit Application pursuant to 15A NCAC 2Q .0504 for the air emission sources (ID Nos. ES-EG1, EG2, and EG-3) on or before 12 months after commencing operation.

As the designated responsible official it is your responsibility to review, understand, and abide by all of the terms and conditions of the attached permit. It is also your responsibility to ensure that any person who operates any emission source and associated air pollution control device subject to any term or condition of the attached permit reviews, understands, and abides by the condition(s) of the attached permit that are applicable to that particular emission source.

Permitting Section
1641 Mail Service Center, Raleigh, North Carolina 27699-1641
2728 Capital Blvd., Raleigh, NC 27604
Phone: 919-715-6237 \ FAX: 919-733-5317 \ Internet: www.daq.state.nc.us

An Equal Opportunity \ Affirmative Action Employer

One NorthCarolina Naturally

If any parts, requirements, or limitations contained in this Air Quality Permit are unacceptable to you, you have the right to request a formal adjudicatory hearing within 30 days following receipt of this permit, identifying the specific issues to be contested. This hearing request must be in the form of a written petition, conforming to NCGS (North Carolina General Statutes) 150B-23, and filed with **both** the Office of Administrative Hearings, 6714 Mail Service Center, Raleigh, North Carolina 27699-6714 and the Division of Air Quality, Permitting Section, 1641 Mail Service Center, Raleigh, North Carolina 27699-1641. The form for requesting a formal adjudicatory hearing may be obtained upon request from the Office of Administrative Hearings. Please note that this permit will be stayed in its entirety upon receipt of the request for a hearing unless a request for a hearing is made pursuant to NCGS 150B-23, this Air Quality Permit shall be final and binding 30 days after issuance.

You may request modification of your Air Quality Permit through informal means pursuant to NCGS 150B-22. This request must be submitted in writing to the Director and must identify the specific provisions or issues for which the modification is sought. Please note that this Air Quality Permit will become final and binding regardless of a request for informal modification unless a request for a hearing is also made under NCGS 150B-23.

The construction of new air pollution emission source(s) and associated air pollution control device(s), or modifications to the emission source(s) and air pollution control device(s) described in this permit must be covered under an Air Quality Permit issued by the Division of Air Quality prior to construction unless the Permittee has fulfilled the requirements of GS 143-215-108A(b) and received written approval from the Director of the Division of Air Quality to commence construction. Failure to receive an Air Quality Permit or written approval prior to commencing construction is a violation of GS 143-215.108A and may subject the Permittee to civil or criminal penalties as described in GS 143-215.114A and 143-215.114B.

This Air Quality Permit shall be effective from **February 18, 2009** until **January 31, 2014**, is nontransferable to future owners and operators, and shall be subject to the conditions and limitations as specified therein.

Should you have any questions concerning this matter, please contact Mr. Booker T. Pullen, E.I.T at (919) 715-6248.

Sincerely yours,

Donald R. van der Vaart, Ph.D., P.E.,
Chief

Enclosure

c: Raleigh Regional Office
Central Files

NORTH CAROLINA ENVIRONMENTAL MANAGEMENT COMMISSION

DEPARTMENT OF ENVIRONMENT AND NATURAL RESOURCES

DIVISION OF AIR QUALITY

AIR PERMIT NO. 09971R00

Issue Date: February 18, 2009 **Effective Date:** February 18, 2009

Expiration Date: January 31, 2014 **Replaces Permit:** N/A

To construct and operate air emission source(s) and/or air cleaning device(s), and for the discharge of the associated air contaminants into the atmosphere in accordance with the provisions of Article 21B of Chapter 143, General Statutes of North Carolina (NCGS) as amended, and other applicable Laws, Rules and Regulations,

Methane Power Durham Landfill, LLC
2115 East Club Boulevard
Durham, Durham County, North Carolina
Fee Class: Title V
Site Number: 05/32/00375

(the Permittee) is hereby authorized to construct and operate the air emissions sources and/or air cleaning devices and appurtenances described below:

Emission Source ID	Emission Source Description	Control System ID	Control System Description
ES-EG1	Landfill gas-fired generator (1059 kW generator output, 1468 hp output)	N/A	N/A
ES-EG2	Landfill gas-fired generator (1059 kW generator output, 1468 hp output)	N/A	N/A
ES-EG3	Landfill gas-fired generator (1059 kW generator output, 1468 hp output)	N/A	N/A

in accordance with the completed application **3200375.08A** received **December 17, 2009** including any plans, specifications, previous applications, and other supporting data, all of which are filed with the Department of Environment and Natural Resources, Division of Air Quality (DAQ) and are incorporated as part of this permit.

This permit is subject to the following specified conditions and limitations including any TESTING, REPORTING, OR MONITORING REQUIREMENTS:

A. SPECIFIC CONDITIONS AND LIMITATIONS

1. Any air emission sources or control devices authorized to construct and operate above must be operated and maintained in accordance with the provisions contained herein. The Permittee shall comply with applicable Environmental Management Commission Regulations, including Title 15A North Carolina Administrative Code (NCAC), Subchapter 2D .0202, 2D .0516, 2D .0521, 2D .0524 (Subpart JJJJ), 2D .0535, and 2D .1111 (Subpart ZZZZ).

2. EMISSION INVENTORY REQUIREMENT - The Permittee shall report by **June 30 of each year** the actual emissions of each air pollutant listed in 15A NCAC 2Q .0207(a) from each emission source within the facility during the previous calendar year. The report shall be in or on such form as may be established by the Director. The accuracy of the report shall be certified by a responsible official of the facility.

3. SULFUR DIOXIDE CONTROL REQUIREMENT - As required by 15A NCAC 2D .0516 "Sulfur Dioxide Emission from Combustion Sources", sulfur dioxide emissions from the generators shall not exceed **2.3 pounds per million Btu heat input.**

4. VISIBLE EMISSIONS CONTROL REQUIREMENT - As required by 15A NCAC 2D .0521 "Control of Visible Emissions," visible emissions from the generators, manufactured after July 1, 1971, shall not be more than **20 percent opacity** when averaged over a six-minute period, except that six-minute periods averaging not more than 87 percent opacity may occur not more than once in any hour nor more than four times in any 24-hour period. However, sources which must comply with 15A NCAC 2D .0524 "New Source Performance Standards" or .1110 "National Emission Standards for Hazardous Air Pollutants" must comply with applicable visible emissions requirements contained therein.

5. NOTIFICATION REQUIREMENT - As required by 15A NCAC 2D .0535, the Permittee of a source of excess emissions that last for more than four hours and that results from a malfunction, a breakdown of process or control equipment or any other abnormal conditions, shall:

   a. Notify the Director or his designee of any such occurrence by 9:00 a.m. Eastern time of the Division's next business day of becoming aware of the occurrence and describe:

      i. the name and location of the facility,

      ii. the nature and cause of the malfunction or breakdown,

      iii. the time when the malfunction or breakdown is first observed,

      iv. the expected duration, and

      v. an estimated rate of emissions.

   b. Notify the Director or his designee immediately when the corrective measures have been accomplished.

   This reporting requirement does not allow the operation of the facility in excess of Environmental Management Commission Regulations.

6. **15A NCAC 2D .1111, 40 CFR Part 63, Subpart ZZZZ "National Emission Standards For Hazardous Air Pollutants For "New" Stationary Reciprocating Internal Combustion Engines (RICE) Located At An Area Source of Hazardous Air Pollutants (HAPs)**
   - ES-EG1 (Landfill gas-fired generator (1059 kW generator output, 1468 hp output)
   - ES-EG2 (Landfill gas-fired generator (1059 kW generator output, 1468 hp output)
   - ES-EG3 (Landfill gas-fired generator (1059 kW generator output, 1468 hp output)

Emission Limitations/Testing/Monitoring/Reporting/Recordkeeping

a. Owners and operators of a new stationary RICE located at area sources of HAP emissions shall meet the requirements of the final spark ignition (SI) NSPS (40 CFR part 60, Subpart JJJJ), as appropriate.
   i. Compliance with 40 CFR Part 60, Subpart JJJJ meets the compliance requirements of 40 CFR Part 63, Subpart ZZZZ, for a new SI RICE located at an area source of HAP emissions. [40 CFR §63.6590(c)]

b. Area sources of HAP emissions that become major sources.
   If an area source increases its emissions or its potential to emit such that it becomes a major source of HAP as defined in 40 CFR §63.2, the compliance dates are as follows:
   i. Any stationary RICE for which construction or reconstruction is commenced after the date when an area source becomes a major source of HAP, the IC RICE must be in compliance with 40 CFR Part 63, Subpart ZZZZ upon startup of the affected source.

   ii. Any stationary RICE for which construction or reconstruction is commenced before the area source becomes a major source of HAP must be in compliance with 40 CFR Part 63, Subpart ZZZZ within 3 years after the area source becomes a major source of HAP.

   iii. Owning or operating an affected source requires that the applicable notification requirements in 40 CFR §63.6645 and in 40 CFR Part 63, Subpart A are met.

7. **15A NCAC 2D .0524: New Source Performance Standards For Stationary Compression Internal Combustion Engines [40 CFR 60 Subpart JJJJ], "NOx, CO, VOCs"**
   - ES-EG1 (Landfill gas-fired generator (1059 kW generator output, 1468 hp output)
   - ES-EG2 (Landfill gas-fired generator (1059 kW generator output, 1468 hp output)
   - ES-EG3 (Landfill gas-fired generator (1059 kW generator output, 1468 hp output)

a. The Permittee shall comply with all applicable provisions, including the requirements for emission standards, notification, testing, reporting, record keeping, and monitoring, contained in Environmental Management Commission Standard 15A NCAC 2D .0524 "New Source Performance Standards (NSPS)" as promulgated in 40 CFR Part 60 Subpart JJJJ, including Subpart A "General Provisions." [15A NCAC 2D .0524]

Emission Standards

b. The Permittee shall comply with the following emission standards for spark ignition, landfill gas-fired generators.

Table 1 to NSPS, 40 CFR Part 60, Subpart JJJJ Standards for landfill gas-fired engines > 500 hp

Pollutant	Emission Standard (g/hp-hr) -or-	Emission Standard (ppmvd at 15% O_2)
NOx	3.0 g/hp-hr	220 ppmvd at 15% O_2
CO	5.0 g/hp-hr	610 ppmvd at 15% O_2
VOC	1.0 g/hp-hr	80 ppmvd at 15% O_2

Testing [15A NCAC 2D .0501(c)(3)]

c. If emissions testing is required, the testing shall be performed in accordance with General Condition JJ found in Section 3 of the Title V Air Permit. If the results of this test are above the limit given in Section 2.1 9 .b. above, the Permittee shall be deemed in noncompliance with 15A NCAC 2D .0524.

d. **Monitoring** [15A NCAC 2D .0524, 40 CFR Part 60, §60.4233(e)]

i. Owners and operators of landfill gas-fired stationary spark ignition internal combustion engines with a maximum engine power greater than or equal to 75 KW (100 HP) shall comply with the emission standards in Table 1 of 40 CFR Part 60, Subpart JJJJ. For owners and operators of stationary SI ICE with a maximum engine power greater than or equal to 100 HP manufactured prior to January 1, 2011 that were certified to the certification emission standards in 40 CFR part 1048 applicable to engines that are not severe duty engines, if such stationary SI ICE was certified to a carbon monoxide (CO) standard above the standard in Table 1 to this subpart, then the owners and operators may meet the CO certification (not field testing) standard for which the engine was certified.

ii. Owners or operators of landfill gas-fired stationary spark ignition internal combustion engines that are manufactured after July 1, 2008, that must comply with the emission standards specified in 40 CFR §60.4233(e), shall comply with these standards by purchasing an engine certified to the emission standards in 40 CFR §60.4231(a) through (c), as applicable, for the same engine class and maximum engine power. Engines shall also meet the requirements as specified in 40 CFR Part 1068, Subparts A through D, as they apply.

(A) If owners or operators adjust engine settings according to and consistent with the manufacturer's instructions, the stationary SI internal combustion engine will not be considered out of compliance. In addition, the engines shall meet one of the requirements specified below:

(B) If owners or operators operate and maintain the certified landfill gas-fired stationary spark ignition internal combustion engine and control device (if required) according to the manufacturer's emission-related written instructions, you must keep records of conducted maintenance to demonstrate compliance, but no performance testing is required if you are an owner or operator.

(B) If owners or operators **do not** operate and maintain the certified stationary spark ignition internal combustion engine and control device according to the manufacturer's emission-related written instructions, the engine will be considered a non-certified engine, and shall demonstrate compliance as follows:

(1) Owners or operators shall keep maintenance plans and records of conducted maintenance and shall, to the extent practicable, maintain and operate the engine in a manner consistent with good air pollution control practice for minimizing emissions. In addition, an initial performance test shall be conducted within 1 year of engine startup and conduct subsequent performance testing every 8,760 hours or 3 years, whichever comes first, thereafter to demonstrate compliance. [15A NCAC 2Q .0508(f), 40 CFR §60.4214]

iii. **Recordkeeping/Reporting** [15A NCAC 2Q .0508(f)]

Owners and operators of all stationary spark ignition internal combustion engines shall keep records of:

(A) All notifications submitted to comply with this subpart and all documentation supporting any notification.

(B) Maintenance conducted on the engine.

(C) If the stationary SI internal combustion engine is a certified engine, documentation from the manufacturer that the engine is certified to meet the emission standards and information as required in 40 CFR parts 90, 1048, 1054, and 1060, as applicable.

(D) If the stationary SI internal combustion engine is not a certified engine or is a certified engine operating in a non-certified manner and subject to §60.4243(a)(2), documentation that the engine meets the emission standards.

B. GENERAL CONDITIONS AND LIMITATIONS

1. TWO COPIES OF ALL DOCUMENTS, REPORTS, TEST DATA, MONITORING DATA, NOTIFICATIONS, REQUESTS FOR RENEWAL, AND ANY OTHER INFORMATION REQUIRED BY THIS PERMIT shall be submitted to the:

   Regional Air Quality Supervisor
   North Carolina Division of Air Quality
   Raleigh Regional Office
   3800 Barrett Drive, Suite 101
   Raleigh, North Carolina 27609
   (919) 791-4200

2. RECORDS RETENTION REQUIREMENT - Any records required by the conditions of this permit shall be kept on site and made available to DAQ personnel for inspection upon request. These records shall be maintained in a form suitable and readily available for expeditious inspection and review. These records must be kept on site for a minimum of 2 years, unless another time period is otherwise specified.

3. PERMIT RENEWAL REQUIREMENT - The Permittee, at least 90 days prior to the expiration date of this permit, shall request permit renewal by letter in accordance with 15A NCAC 2Q .0304(d) and (f). Pursuant to 15A NCAC 2Q .0203(i), no permit application fee is required for renewal of an existing air permit. The renewal request should be submitted to the Regional Supervisor, DAQ.

4. ANNUAL FEE PAYMENT - Pursuant to 15A NCAC 2Q .0203(a), the Permittee shall pay the annual permit fee within 30 days of being billed by the DAQ. Failure to pay the fee in a timely manner will cause the DAQ to initiate action to revoke the permit.

5. EQUIPMENT RELOCATION - A new air permit shall be obtained by the Permittee prior to establishing, building, erecting, using, or operating the emission sources or air cleaning equipment at a site or location not specified in this permit.

6. This permit is subject to revocation or modification by the DAQ upon a determination that information contained in the application or presented in the support thereof is incorrect, conditions under which this permit was granted have changed, or violations of conditions contained in this permit have occurred. The facility shall be properly operated and maintained at all times in a manner that will effect an overall reduction in air pollution. Unless otherwise specified by this permit, no emission source may be operated without the concurrent operation of its associated air cleaning device(s) and appurtenances.

7. REPORTING REQUIREMENT - Any of the following that would result in previously unpermitted, new, or increased emissions must be reported to the Regional Supervisor, DAQ:

   a. changes in the information submitted in the application regarding facility emissions;

   b. changes that modify equipment or processes of existing permitted facilities; or

   c. changes in the quantity or quality of materials processed.

   If appropriate, modifications to the permit may then be made by the DAQ to reflect any necessary changes in the permit conditions. In no case are any new or increased emissions allowed that will cause a violation of the emission limitations specified herein.

8. This permit is nontransferable by the Permittee. Future owners and operators must obtain a new air permit from the DAQ.

9. This issuance of this permit in no way absolves the Permittee of liability for any potential civil penalties which may be assessed for violations of State law which have occurred prior to the effective date of this permit.

10. This permit does not relieve the Permittee of the responsibility of complying with all applicable requirements of any Federal, State, or Local water quality or land quality control authority.

11. Reports on the operation and maintenance of the facility shall be submitted by the Permittee to the Regional Supervisor, DAQ at such intervals and in such form and detail as may be required by the DAQ. Information required in such reports may include, but is not limited to, process weight rates, firing rates, hours of operation, and preventive maintenance schedules.

12. A violation of any term or condition of this permit shall subject the Permittee to enforcement pursuant to G.S. 143-215.114A, 143-215.114B, and 143-215.114C, including assessment of civil and/or criminal penalties.

13. Pursuant to North Carolina General Statute 143-215.3(a)(2), no person shall refuse entry or access to any authorized representative of the DAQ who requests entry or access for purposes of inspection, and who presents appropriate credentials, nor shall any person obstruct, hamper, or interfere with any such representative while in the process of carrying out his official duties. Refusal of entry or access may constitute grounds for permit revocation and assessment of civil penalties.

14. The Permittee must comply with any applicable Federal, State, or Local requirements governing the handling, disposal, or incineration of hazardous, solid, or medical wastes, including the Resource Conservation and Recovery Act (RCRA) administered by the Division of Waste Management.

15. PERMIT RETENTION REQUIREMENT - The Permittee shall retain a current copy of the air permit at the site. The Permittee must make available to personnel of the DAQ, upon request, the current copy of the air permit for the site.

16. CLEAN AIR ACT SECTION 112(r) REQUIREMENTS - Pursuant to 40 CFR Part 68 "Accidental Release Prevention Requirements: Risk Management Programs Under the Clean Air Act, Section 112(r)," if the Permittee is required to develop and register a risk management plan pursuant to Section 112(r) of the Federal Clean Air Act, then the Permittee is required to register this plan in accordance with 40 CFR Part 68.

17. PREVENTION OF ACCIDENTAL RELEASES - GENERAL DUTY - Pursuant to Title I Part A Section 112(r)(1) of the Clean Air Act "Hazardous Air Pollutants - Prevention of Accidental Releases - Purpose and General Duty," although a risk management plan may not be required, if the Permittee produces, processes, handles, or stores any amount of a listed hazardous substance, the Permittee has a general duty to take such steps as are necessary to prevent the accidental release of such substance and to minimize the consequences of any release. **This condition is federally-enforceable only.**

Permit issued this the 18th day of February, 2009.

NORTH CAROLINA ENVIRONMENTAL MANAGEMENT COMMISSION

Donald R. van der Vaart, Ph.D., P.E., Chief, Air Permits Section
Division of Air Quality
By Authority of the Environmental Management Commission

Air Permit No. 09971R00

Appendix C
Technical Design Information

Table of Contents

- Landfill Gas Generation Information
- Condensate Generation Calculation

Landfill Gas Generation Information

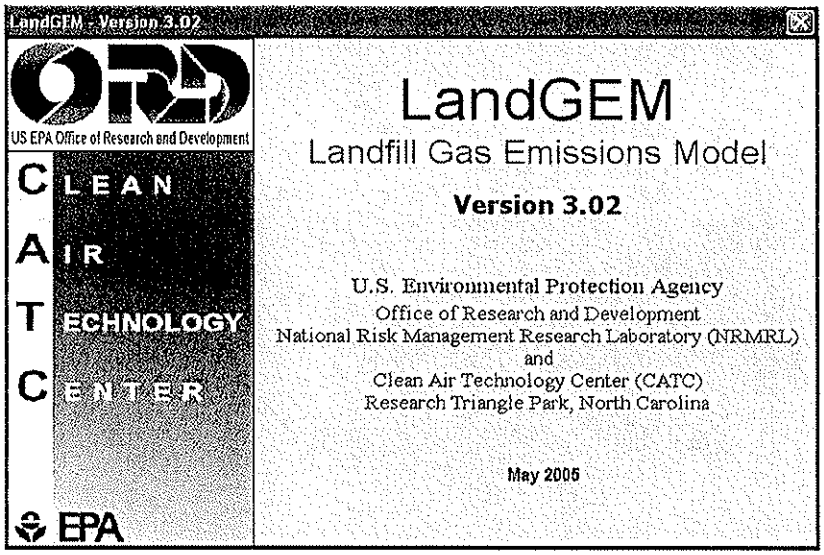

Summary Report

Landfill Name or Identifier: Durham Municipal Landfill, Durham, NC

Date: Wednesday, September 10, 2008

Description/Comments:

About LandGEM:

First-Order Decomposition Rate Equation:

$$Q_{CH_4} = \sum_{i=1}^{n} \sum_{j=0.1}^{1} k L_o \left(\frac{M_i}{10} \right) e^{-k t_{ij}}$$

Where,

Q_{CH_4} = annual methane generation in the year of the calculation *(m^3/year)*
i = 1-year time increment
n = (year of the calculation) - (initial year of waste acceptance)
j = 0.1-year time increment
k = methane generation rate *($year^{-1}$)*
L_o = potential methane generation capacity *(m^3/Mg)*

M_i = mass of waste accepted in the ith year *(Mg)*
t_{ij} = age of the jth section of waste mass M_i accepted in the ith year (*decimal years*, e.g., 3.2 years)

LandGEM is based on a first-order decomposition rate equation for quantifying emissions from the decomposition of landfilled waste in municipal solid waste (MSW) landfills. The software provides a relatively simple approach to estimating landfill gas emissions. Model defaults are based on empirical data from U.S. landfills. Field test data can also be used in place of model defaults when available. Further guidance on EPA test methods, Clean Air Act (CAA) regulations, and other guidance regarding landfill gas emissions and control technology requirements can be found at http://www.epa.gov/ttnatw01/landfill/landflpg.html.

LandGEM is considered a screening tool — the better the input data, the better the estimates. Often, there are limitations with the available data regarding waste quantity and composition, variation in design and operating practices over time, and changes occurring over time that impact the emissions potential. Changes to landfill operation, such as operating under wet conditions through leachate recirculation or other liquid additions, will result in generating more gas at a faster rate. Defaults for estimating emissions for this type of operation are being developed to include in LandGEM along with defaults for convential landfills (no leachate or liquid additions) for developing emission inventories and determining CAA applicability. Refer to the Web site identified above for future updates.

Input Review

LANDFILL CHARACTERISTICS

Landfill Open Year	1973	
Landfill Closure Year (with 80-year limit)	1997	
Actual Closure Year (without limit)	*1997*	
Have Model Calculate Closure Year?	No	
Waste Design Capacity		*megagrams*

MODEL PARAMETERS

Methane Generation Rate, k	0.050	*$year^{-1}$*
Potential Methane Generation Capacity, L_o	170	*m^3/Mg*
NMOC Concentration	4,000	*ppmv as hexane*
Methane Content	50	*% by volume*

GASES / POLLUTANTS SELECTED

Gas / Pollutant #1:	**Total landfill gas**
Gas / Pollutant #2:	**Methane**
Gas / Pollutant #3:	**Carbon dioxide**
Gas / Pollutant #4:	**NMOC**

WASTE ACCEPTANCE RATES

Year	Waste Accepted		Waste-In-Place	
	(Mg/year)	*(short tons/year)*	*(Mg)*	*(short tons)*
1973	22,680	24,948	0	0
1974	32,451	35,696	22,680	24,948
1975	42,221	46,443	55,131	60,644
1976	51,992	57,191	97,352	107,087
1977	61,762	67,938	149,344	164,278
1978	71,533	78,686	211,106	232,217
1979	81,303	89,433	282,639	310,903
1980	91,074	100,181	363,942	400,336
1981	100,844	110,928	455,016	500,518
1982	110,615	121,677	555,860	611,446
1983	120,217	132,239	666,475	733,123
1984	130,156	143,172	786,692	865,361
1985	169,068	185,975	916,848	1,008,533
1986	172,369	189,606	1,085,916	1,194,508
1987	197,363	217,099	1,258,285	1,384,114
1988	203,387	223,726	1,455,648	1,601,213
1989	207,208	227,929	1,659,035	1,824,939
1990	196,877	216,565	1,866,243	2,052,867
1991	189,021	207,923	2,063,120	2,269,432
1992	176,362	193,998	2,252,141	2,477,355
1993	187,402	206,142	2,428,503	2,671,353
1994	187,072	205,779	2,615,905	2,877,496
1995	160,898	176,988	2,802,977	3,083,275
1996	188,342	207,176	2,963,875	3,260,263
1997	191,968	211,165	3,152,217	3,467,439
1998	0	0	3,344,185	3,678,604
1999	0	0	3,344,185	3,678,604
2000	0	0	3,344,185	3,678,604
2001	0	0	3,344,185	3,678,604
2002	0	0	3,344,185	3,678,604
2003	0	0	3,344,185	3,678,604
2004	0	0	3,344,185	3,678,604
2005	0	0	3,344,185	3,678,604
2006	0	0	3,344,185	3,678,604
2007	0	0	3,344,185	3,678,604
2008	0	0	3,344,185	3,678,604
2009	0	0	3,344,185	3,678,604
2010	0	0	3,344,185	3,678,604
2011	0	0	3,344,185	3,678,604
2012	0	0	3,344,185	3,678,604

WASTE ACCEPTANCE RATES (Continued)

Year	Waste Accepted		Waste-In-Place	
	(Mg/year)	(short tons/year)	(Mg)	(short tons)
2013	0	0	3,344,185	3,678,604
2014	0	0	3,344,185	3,678,604
2015	0	0	3,344,185	3,678,604
2016	0	0	3,344,185	3,678,604
2017	0	0	3,344,185	3,678,604
2018	0	0	3,344,185	3,678,604
2019	0	0	3,344,185	3,678,604
2020	0	0	3,344,185	3,678,604
2021	0	0	3,344,185	3,678,604
2022	0	0	3,344,185	3,678,604
2023	0	0	3,344,185	3,678,604
2024	0	0	3,344,185	3,678,604
2025	0	0	3,344,185	3,678,604
2026	0	0	3,344,185	3,678,604
2027	0	0	3,344,185	3,678,604
2028	0	0	3,344,185	3,678,604
2029	0	0	3,344,185	3,678,604
2030	0	0	3,344,185	3,678,604
2031	0	0	3,344,185	3,678,604
2032	0	0	3,344,185	3,678,604
2033	0	0	3,344,185	3,678,604
2034	0	0	3,344,185	3,678,604
2035	0	0	3,344,185	3,678,604
2036	0	0	3,344,185	3,678,604
2037	0	0	3,344,185	3,678,604
2038	0	0	3,344,185	3,678,604
2039	0	0	3,344,185	3,678,604
2040	0	0	3,344,185	3,678,604
2041	0	0	3,344,185	3,678,604
2042	0	0	3,344,185	3,678,604
2043	0	0	3,344,185	3,678,604
2044	0	0	3,344,185	3,678,604
2045	0	0	3,344,185	3,678,604
2046	0	0	3,344,185	3,678,604
2047	0	0	3,344,185	3,678,604
2048	0	0	3,344,185	3,678,604
2049	0	0	3,344,185	3,678,604
2050	0	0	3,344,185	3,678,604
2051	0	0	3,344,185	3,678,604
2052	0	0	3,344,185	3,678,604

Pollutant Parameters

	Compound	Gas / Pollutant Default Parameters: Concentration (ppmv)	Molecular Weight	User-specified Pollutant Parameters: Concentration (ppmv)	Molecular Weight
Gases	Total landfill gas		0.00		
	Methane		16.04		
	Carbon dioxide		44.01		
	NMOC	4,000	86.18		
Pollutants	1,1,1-Trichloroethane (methyl chloroform) - HAP	0.48	133.41		
	1,1,2,2-Tetrachloroethane - HAP/VOC	1.1	167.85		
	1,1-Dichloroethane (ethylidene dichloride) - HAP/VOC	2.4	98.97		
	1,1-Dichloroethene (vinylidene chloride) - HAP/VOC	0.20	96.94		
	1,2-Dichloroethane (ethylene dichloride) - HAP/VOC	0.41	98.96		
	1,2-Dichloropropane (propylene dichloride) - HAP/VOC	0.18	112.99		
	2-Propanol (isopropyl alcohol) - VOC	50	60.11		
	Acetone	7.0	58.08		
	Acrylonitrile - HAP/VOC	6.3	53.06		
	Benzene - No or Unknown Co-disposal - HAP/VOC	1.9	78.11		
	Benzene - Co-disposal - HAP/VOC	11	78.11		
	Bromodichloromethane - VOC	3.1	163.83		
	Butane - VOC	5.0	58.12		
	Carbon disulfide - HAP/VOC	0.58	76.13		
	Carbon monoxide	140	28.01		
	Carbon tetrachloride - HAP/VOC	4.0E-03	153.84		
	Carbonyl sulfide - HAP/VOC	0.49	60.07		
	Chlorobenzene - HAP/VOC	0.25	112.56		
	Chlorodifluoromethane	1.3	86.47		
	Chloroethane (ethyl chloride) - HAP/VOC	1.3	64.52		
	Chloroform - HAP/VOC	0.03	119.39		
	Chloromethane - VOC	1.2	50.49		
	Dichlorobenzene - (HAP for para isomer/VOC)	0.21	147		
	Dichlorodifluoromethane	16	120.91		
	Dichlorofluoromethane - VOC	2.6	102.92		
	Dichloromethane (methylene chloride) - HAP	14	84.94		
	Dimethyl sulfide (methyl sulfide) - VOC	7.8	62.13		
	Ethane	890	30.07		
	Ethanol - VOC	27	46.08		

Pollutant Parameters (Continued)

	Compound	Gas / Pollutant Default Parameters: Concentration (*ppmv*)	Molecular Weight	User-specified Pollutant Parameters: Concentration (*ppmv*)	Molecular Weight
Pollutants	Ethyl mercaptan (ethanethiol) - VOC	2.3	62.13		
	Ethylbenzene - HAP/VOC	4.6	106.16		
	Ethylene dibromide - HAP/VOC	1.0E-03	187.88		
	Fluorotrichloromethane - VOC	0.76	137.38		
	Hexane - HAP/VOC	6.6	86.18		
	Hydrogen sulfide	36	34.08		
	Mercury (total) - HAP	2.9E-04	200.61		
	Methyl ethyl ketone - HAP/VOC	7.1	72.11		
	Methyl isobutyl ketone - HAP/VOC	1.9	100.16		
	Methyl mercaptan - VOC	2.5	48.11		
	Pentane - VOC	3.3	72.15		
	Perchloroethylene (tetrachloroethylene) - HAP	3.7	165.83		
	Propane - VOC	11	44.09		
	t-1,2-Dichloroethene - VOC	2.8	96.94		
	Toluene - No or Unknown Co-disposal - HAP/VOC	39	92.13		
	Toluene - Co-disposal - HAP/VOC	170	92.13		
	Trichloroethylene (trichloroethene) - HAP/VOC	2.8	131.40		
	Vinyl chloride - HAP/VOC	7.3	62.50		
	Xylenes - HAP/VOC	12	106.16		

Graphs

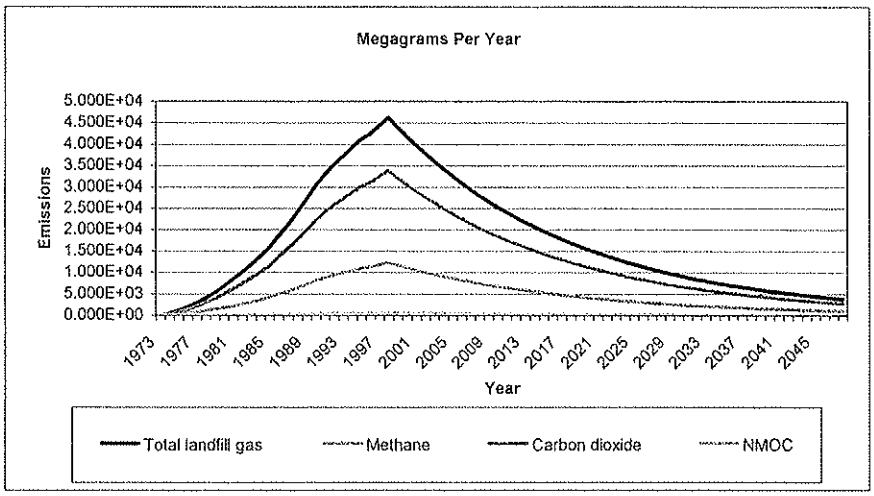
Megagrams Per Year
Emissions
5.000E+04
4.500E+04
4.000E+04
3.500E+04
3.000E+04
2.500E+04
2.000E+04
1.500E+04
1.000E+04
5.000E+03
0.000E+00
1973 1977 1981 1985 1989 1993 1997 2001 2005 2009 2013 2017 2021 2025 2029 2033 2037 2041 2045
Year
Total landfill gas
Methane
Carbon dioxide
NMOC

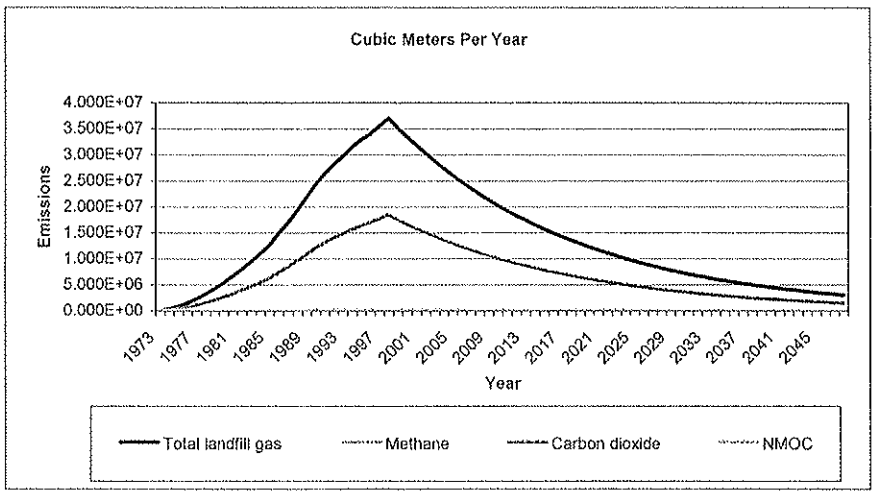
Cubic Meters Per Year
Emissions
4.000E+07
3.500E+07
3.000E+07
2.500E+07
2.000E+07
1.500E+07
1.000E+07
5.000E+06
0.000E+00
1973 1977 1981 1985 1989 1993 1997 2001 2005 2009 2013 2017 2021 2025 2029 2033 2037 2041 2045
Year
Total landfill gas
Methane
Carbon dioxide
NMOC

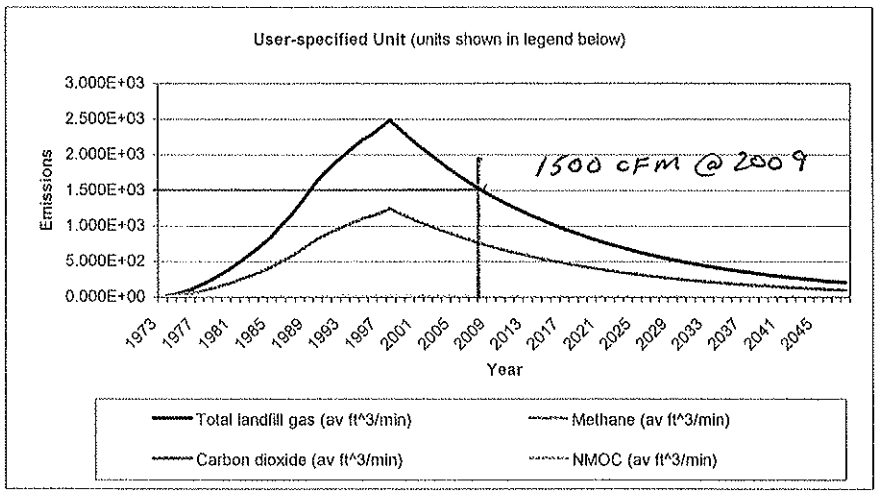
User-specified Unit (units shown in legend below)
Emissions
3.000E+03
2.500E+03
2.000E+03
1.500E+03
1.000E+03
5.000E+02
0.000E+00
1500 cFM @ 2009
1973 1977 1981 1985 1989 1993 1997 2001 2005 2009 2013 2017 2021 2025 2029 2033 2037 2041 2045
Year
Total landfill gas (av ft^3/min)
Methane (av ft^3/min)
Carbon dioxide (av ft^3/min)
NMOC (av ft^3/min)

Results

Year	Total landfill gas			Methane		
	(Mg/year)	(m^3/year)	(av ft^3/min)	(Mg/year)	(m^3/year)	(av ft^3/min)
1973	0	0	0	0	0	0
1974	4.708E+02	3.770E+05	2.533E+01	1.258E+02	1.885E+05	1.267E+01
1975	1.122E+03	8.981E+05	6.034E+01	2.996E+02	4.490E+05	3.017E+01
1976	1.943E+03	1.556E+06	1.046E+02	5.191E+02	7.781E+05	5.228E+01
1977	2.928E+03	2.345E+06	1.575E+02	7.821E+02	1.172E+06	7.876E+01
1978	4.067E+03	3.257E+06	2.188E+02	1.086E+03	1.628E+06	1.094E+02
1979	5.354E+03	4.287E+06	2.881E+02	1.430E+03	2.144E+06	1.440E+02
1980	6.781E+03	5.430E+06	3.648E+02	1.811E+03	2.715E+06	1.824E+02
1981	8.341E+03	6.679E+06	4.487E+02	2.228E+03	3.339E+06	2.244E+02
1982	1.003E+04	8.029E+06	5.395E+02	2.678E+03	4.015E+06	2.697E+02
1983	1.183E+04	9.477E+06	6.367E+02	3.161E+03	4.738E+06	3.184E+02
1984	1.375E+04	1.101E+07	7.400E+02	3.674E+03	5.506E+06	3.700E+02
1985	1.578E+04	1.264E+07	8.492E+02	4.216E+03	6.320E+06	4.246E+02
1986	1.852E+04	1.483E+07	9.967E+02	4.948E+03	7.417E+06	4.983E+02
1987	2.120E+04	1.698E+07	1.141E+03	5.663E+03	8.488E+06	5.703E+02
1988	2.426E+04	1.943E+07	1.305E+03	6.481E+03	9.714E+06	6.527E+02
1989	2.730E+04	2.186E+07	1.469E+03	7.293E+03	1.093E+07	7.344E+02
1990	3.027E+04	2.424E+07	1.629E+03	8.086E+03	1.212E+07	8.143E+02
1991	3.288E+04	2.633E+07	1.769E+03	8.783E+03	1.317E+07	8.846E+02
1992	3.520E+04	2.819E+07	1.894E+03	9.403E+03	1.409E+07	9.470E+02
1993	3.715E+04	2.975E+07	1.999E+03	9.922E+03	1.487E+07	9.993E+02
1994	3.923E+04	3.141E+07	2.110E+03	1.048E+04	1.571E+07	1.055E+03
1995	4.120E+04	3.299E+07	2.216E+03	1.100E+04	1.649E+07	1.108E+03
1996	4.253E+04	3.405E+07	2.288E+03	1.136E+04	1.703E+07	1.144E+03
1997	4.436E+04	3.552E+07	2.387E+03	1.185E+04	1.776E+07	1.193E+03
1998	4.618E+04	3.698E+07	2.485E+03	1.234E+04	1.849E+07	1.242E+03
1999	4.393E+04	3.518E+07	2.364E+03	1.173E+04	1.759E+07	1.182E+03
2000	4.179E+04	3.346E+07	2.248E+03	1.116E+04	1.673E+07	1.124E+03
2001	3.975E+04	3.183E+07	2.139E+03	1.062E+04	1.592E+07	1.069E+03
2002	3.781E+04	3.028E+07	2.034E+03	1.010E+04	1.514E+07	1.017E+03
2003	3.597E+04	2.880E+07	1.935E+03	9.608E+03	1.440E+07	9.676E+02
2004	3.421E+04	2.740E+07	1.841E+03	9.139E+03	1.370E+07	9.204E+02
2005	3.255E+04	2.606E+07	1.751E+03	8.693E+03	1.303E+07	8.755E+02
2006	3.096E+04	2.479E+07	1.666E+03	8.269E+03	1.240E+07	8.328E+02
2007	2.945E+04	2.358E+07	1.584E+03	7.866E+03	1.179E+07	7.922E+02
2008	2.801E+04	2.243E+07	1.507E+03	7.482E+03	1.122E+07	7.536E+02
2009	2.665E+04	2.134E+07	1.434E+03	7.118E+03	1.067E+07	7.168E+02
2010	2.535E+04	2.030E+07	1.364E+03	6.770E+03	1.015E+07	6.819E+02
2011	2.411E+04	1.931E+07	1.297E+03	6.440E+03	9.653E+06	6.486E+02
2012	2.293E+04	1.837E+07	1.234E+03	6.126E+03	9.183E+06	6.170E+02
2013	2.182E+04	1.747E+07	1.174E+03	5.827E+03	8.735E+06	5.869E+02
2014	2.075E+04	1.662E+07	1.117E+03	5.543E+03	8.309E+06	5.583E+02
2015	1.974E+04	1.581E+07	1.062E+03	5.273E+03	7.903E+06	5.310E+02
2016	1.878E+04	1.504E+07	1.010E+03	5.016E+03	7.518E+06	5.051E+02
2017	1.786E+04	1.430E+07	9.610E+02	4.771E+03	7.151E+06	4.805E+02
2018	1.699E+04	1.361E+07	9.141E+02	4.538E+03	6.803E+06	4.571E+02
2019	1.616E+04	1.294E+07	8.695E+02	4.317E+03	6.471E+06	4.348E+02
2020	1.537E+04	1.231E+07	8.271E+02	4.106E+03	6.155E+06	4.136E+02
2021	1.462E+04	1.171E+07	7.868E+02	3.906E+03	5.855E+06	3.934E+02
2022	1.391E+04	1.114E+07	7.484E+02	3.716E+03	5.569E+06	3.742E+02

Results (Continued)

Year	Total landfill gas			Methane		
	(Mg/year)	(m^3/year)	(av ft^3/min)	(Mg/year)	(m^3/year)	(av ft^3/min)
2023	1.323E+04	1.060E+07	7.119E+02	3.534E+03	5.298E+06	3.560E+02
2024	1.259E+04	1.008E+07	6.772E+02	3.362E+03	5.039E+06	3.386E+02
2025	1.197E+04	9.587E+06	6.442E+02	3.198E+03	4.794E+06	3.221E+02
2026	1.139E+04	9.120E+06	6.128E+02	3.042E+03	4.560E+06	3.064E+02
2027	1.083E+04	8.675E+06	5.829E+02	2.894E+03	4.338E+06	2.914E+02
2028	1.031E+04	8.252E+06	5.544E+02	2.753E+03	4.126E+06	2.772E+02
2029	9.803E+03	7.850E+06	5.274E+02	2.618E+03	3.925E+06	2.637E+02
2030	9.325E+03	7.467E+06	5.017E+02	2.491E+03	3.733E+06	2.508E+02
2031	8.870E+03	7.103E+06	4.772E+02	2.369E+03	3.551E+06	2.386E+02
2032	8.437E+03	6.756E+06	4.539E+02	2.254E+03	3.378E+06	2.270E+02
2033	8.026E+03	6.427E+06	4.318E+02	2.144E+03	3.213E+06	2.159E+02
2034	7.634E+03	6.113E+06	4.107E+02	2.039E+03	3.057E+06	2.054E+02
2035	7.262E+03	5.815E+06	3.907E+02	1.940E+03	2.908E+06	1.954E+02
2036	6.908E+03	5.531E+06	3.717E+02	1.845E+03	2.766E+06	1.858E+02
2037	6.571E+03	5.262E+06	3.535E+02	1.755E+03	2.631E+06	1.768E+02
2038	6.250E+03	5.005E+06	3.363E+02	1.670E+03	2.503E+06	1.681E+02
2039	5.946E+03	4.761E+06	3.199E+02	1.588E+03	2.380E+06	1.599E+02
2040	5.656E+03	4.529E+06	3.043E+02	1.511E+03	2.264E+06	1.521E+02
2041	5.380E+03	4.308E+06	2.894E+02	1.437E+03	2.154E+06	1.447E+02
2042	5.117E+03	4.098E+06	2.753E+02	1.367E+03	2.049E+06	1.377E+02
2043	4.868E+03	3.898E+06	2.619E+02	1.300E+03	1.949E+06	1.310E+02
2044	4.630E+03	3.708E+06	2.491E+02	1.237E+03	1.854E+06	1.246E+02
2045	4.405E+03	3.527E+06	2.370E+02	1.177E+03	1.764E+06	1.185E+02
2046	4.190E+03	3.355E+06	2.254E+02	1.119E+03	1.677E+06	1.127E+02
2047	3.985E+03	3.191E+06	2.144E+02	1.065E+03	1.596E+06	1.072E+02
2048	3.791E+03	3.036E+06	2.040E+02	1.013E+03	1.518E+06	1.020E+02
2049	3.606E+03	2.888E+06	1.940E+02	9.633E+02	1.444E+06	9.701E+01
2050	3.430E+03	2.747E+06	1.846E+02	9.163E+02	1.373E+06	9.228E+01
2051	3.263E+03	2.613E+06	1.756E+02	8.716E+02	1.306E+06	8.778E+01
2052	3.104E+03	2.485E+06	1.670E+02	8.291E+02	1.243E+06	8.350E+01
2053	2.953E+03	2.364E+06	1.589E+02	7.886E+02	1.182E+06	7.943E+01
2054	2.809E+03	2.249E+06	1.511E+02	7.502E+02	1.124E+06	7.555E+01
2055	2.672E+03	2.139E+06	1.437E+02	7.136E+02	1.070E+06	7.187E+01
2056	2.541E+03	2.035E+06	1.367E+02	6.788E+02	1.017E+06	6.836E+01
2057	2.417E+03	1.936E+06	1.301E+02	6.457E+02	9.678E+05	6.503E+01
2058	2.299E+03	1.841E+06	1.237E+02	6.142E+02	9.206E+05	6.186E+01
2059	2.187E+03	1.751E+06	1.177E+02	5.842E+02	8.757E+05	5.884E+01
2060	2.081E+03	1.666E+06	1.119E+02	5.557E+02	8.330E+05	5.597E+01
2061	1.979E+03	1.585E+06	1.065E+02	5.286E+02	7.924E+05	5.324E+01
2062	1.883E+03	1.507E+06	1.013E+02	5.029E+02	7.537E+05	5.064E+01
2063	1.791E+03	1.434E+06	9.635E+01	4.783E+02	7.170E+05	4.817E+01
2064	1.703E+03	1.364E+06	9.165E+01	4.550E+02	6.820E+05	4.582E+01
2065	1.620E+03	1.298E+06	8.718E+01	4.328E+02	6.488E+05	4.359E+01
2066	1.541E+03	1.234E+06	8.293E+01	4.117E+02	6.171E+05	4.146E+01
2067	1.466E+03	1.174E+06	7.888E+01	3.916E+02	5.870E+05	3.944E+01
2068	1.395E+03	1.117E+06	7.504E+01	3.725E+02	5.584E+05	3.752E+01
2069	1.327E+03	1.062E+06	7.138E+01	3.544E+02	5.312E+05	3.569E+01
2070	1.262E+03	1.011E+06	6.790E+01	3.371E+02	5.053E+05	3.395E+01
2071	1.200E+03	9.612E+05	6.458E+01	3.206E+02	4.806E+05	3.229E+01
2072	1.142E+03	9.143E+05	6.143E+01	3.050E+02	4.572E+05	3.072E+01
2073	1.086E+03	8.698E+05	5.844E+01	2.901E+02	4.349E+05	2.922E+01

Results (Continued)

Year	Total landfill gas			Methane		
	(Mg/year)	(m^3/year)	(av ft^3/min)	(Mg/year)	(m^3/year)	(av ft^3/min)
2074	1.033E+03	8.273E+05	5.559E+01	2.760E+02	4.137E+05	2.779E+01
2075	9.828E+02	7.870E+05	5.288E+01	2.625E+02	3.935E+05	2.644E+01
2076	9.349E+02	7.486E+05	5.030E+01	2.497E+02	3.743E+05	2.515E+01
2077	8.893E+02	7.121E+05	4.785E+01	2.375E+02	3.560E+05	2.392E+01
2078	8.459E+02	6.774E+05	4.551E+01	2.260E+02	3.387E+05	2.276E+01
2079	8.047E+02	6.443E+05	4.329E+01	2.149E+02	3.222E+05	2.165E+01
2080	7.654E+02	6.129E+05	4.118E+01	2.044E+02	3.065E+05	2.059E+01
2081	7.281E+02	5.830E+05	3.917E+01	1.945E+02	2.915E+05	1.959E+01
2082	6.926E+02	5.546E+05	3.726E+01	1.850E+02	2.773E+05	1.863E+01
2083	6.588E+02	5.275E+05	3.544E+01	1.760E+02	2.638E+05	1.772E+01
2084	6.267E+02	5.018E+05	3.372E+01	1.674E+02	2.509E+05	1.686E+01
2085	5.961E+02	4.773E+05	3.207E+01	1.592E+02	2.387E+05	1.604E+01
2086	5.670E+02	4.540E+05	3.051E+01	1.515E+02	2.270E+05	1.525E+01
2087	5.394E+02	4.319E+05	2.902E+01	1.441E+02	2.160E+05	1.451E+01
2088	5.131E+02	4.108E+05	2.760E+01	1.370E+02	2.054E+05	1.380E+01
2089	4.880E+02	3.908E+05	2.626E+01	1.304E+02	1.954E+05	1.313E+01
2090	4.642E+02	3.717E+05	2.498E+01	1.240E+02	1.859E+05	1.249E+01
2091	4.416E+02	3.536E+05	2.376E+01	1.180E+02	1.768E+05	1.188E+01
2092	4.201E+02	3.364E+05	2.260E+01	1.122E+02	1.682E+05	1.130E+01
2093	3.996E+02	3.200E+05	2.150E+01	1.067E+02	1.600E+05	1.075E+01
2094	3.801E+02	3.044E+05	2.045E+01	1.015E+02	1.522E+05	1.022E+01
2095	3.616E+02	2.895E+05	1.945E+01	9.657E+01	1.448E+05	9.726E+00
2096	3.439E+02	2.754E+05	1.850E+01	9.186E+01	1.377E+05	9.252E+00
2097	3.271E+02	2.620E+05	1.760E+01	8.738E+01	1.310E+05	8.801E+00
2098	3.112E+02	2.492E+05	1.674E+01	8.312E+01	1.246E+05	8.371E+00
2099	2.960E+02	2.370E+05	1.593E+01	7.907E+01	1.185E+05	7.963E+00
2100	2.816E+02	2.255E+05	1.515E+01	7.521E+01	1.127E+05	7.575E+00
2101	2.678E+02	2.145E+05	1.441E+01	7.154E+01	1.072E+05	7.205E+00
2102	2.548E+02	2.040E+05	1.371E+01	6.806E+01	1.020E+05	6.854E+00
2103	2.424E+02	1.941E+05	1.304E+01	6.474E+01	9.703E+04	6.520E+00
2104	2.305E+02	1.846E+05	1.240E+01	6.158E+01	9.230E+04	6.202E+00
2105	2.193E+02	1.756E+05	1.180E+01	5.858E+01	8.780E+04	5.899E+00
2106	2.086E+02	1.670E+05	1.122E+01	5.572E+01	8.352E+04	5.612E+00
2107	1.984E+02	1.589E+05	1.068E+01	5.300E+01	7.944E+04	5.338E+00
2108	1.887E+02	1.511E+05	1.016E+01	5.042E+01	7.557E+04	5.078E+00
2109	1.795E+02	1.438E+05	9.660E+00	4.796E+01	7.188E+04	4.830E+00
2110	1.708E+02	1.368E+05	9.189E+00	4.562E+01	6.838E+04	4.594E+00
2111	1.625E+02	1.301E+05	8.741E+00	4.339E+01	6.504E+04	4.370E+00
2112	1.545E+02	1.237E+05	8.314E+00	4.128E+01	6.187E+04	4.157E+00
2113	1.470E+02	1.177E+05	7.909E+00	3.926E+01	5.885E+04	3.954E+00

Results (Continued)

Year	Carbon dioxide			NMOC		
	(Mg/year)	(m^3/year)	(av ft^3/min)	(Mg/year)	(m^3/year)	(av ft^3/min)
1973	0	0	0	0	0	0
1974	3.451E+02	1.885E+05	1.267E+01	5.406E+00	1.508E+03	1.013E-01
1975	8.220E+02	4.490E+05	3.017E+01	1.288E+01	3.592E+03	2.414E-01
1976	1.424E+03	7.781E+05	5.228E+01	2.231E+01	6.225E+03	4.182E-01
1977	2.146E+03	1.172E+06	7.876E+01	3.362E+01	9.378E+03	6.301E-01
1978	2.981E+03	1.628E+06	1.094E+02	4.670E+01	1.303E+04	8.753E-01
1979	3.924E+03	2.144E+06	1.440E+02	6.147E+01	1.715E+04	1.152E+00
1980	4.969E+03	2.715E+06	1.824E+02	7.785E+01	2.172E+04	1.459E+00
1981	6.113E+03	3.339E+06	2.244E+02	9.576E+01	2.672E+04	1.795E+00
1982	7.349E+03	4.015E+06	2.697E+02	1.151E+02	3.212E+04	2.158E+00
1983	8.673E+03	4.738E+06	3.184E+02	1.359E+02	3.791E+04	2.547E+00
1984	1.008E+04	5.506E+06	3.700E+02	1.579E+02	4.405E+04	2.960E+00
1985	1.157E+04	6.320E+06	4.246E+02	1.812E+02	5.056E+04	3.397E+00
1986	1.358E+04	7.417E+06	4.983E+02	2.127E+02	5.933E+04	3.987E+00
1987	1.554E+04	8.488E+06	5.703E+02	2.434E+02	6.790E+04	4.562E+00
1988	1.778E+04	9.714E+06	6.527E+02	2.786E+02	7.771E+04	5.222E+00
1989	2.001E+04	1.093E+07	7.344E+02	3.135E+02	8.745E+04	5.876E+00
1990	2.219E+04	1.212E+07	8.143E+02	3.476E+02	9.696E+04	6.515E+00
1991	2.410E+04	1.317E+07	8.846E+02	3.775E+02	1.053E+05	7.077E+00
1992	2.580E+04	1.409E+07	9.470E+02	4.042E+02	1.128E+05	7.576E+00
1993	2.722E+04	1.487E+07	9.993E+02	4.265E+02	1.190E+05	7.994E+00
1994	2.875E+04	1.571E+07	1.055E+03	4.504E+02	1.256E+05	8.442E+00
1995	3.019E+04	1.649E+07	1.108E+03	4.730E+02	1.320E+05	8.866E+00
1996	3.117E+04	1.703E+07	1.144E+03	4.883E+02	1.362E+05	9.152E+00
1997	3.251E+04	1.776E+07	1.193E+03	5.093E+02	1.421E+05	9.547E+00
1998	3.385E+04	1.849E+07	1.242E+03	5.303E+02	1.479E+05	9.939E+00
1999	3.220E+04	1.759E+07	1.182E+03	5.044E+02	1.407E+05	9.455E+00
2000	3.063E+04	1.673E+07	1.124E+03	4.798E+02	1.339E+05	8.994E+00
2001	2.913E+04	1.592E+07	1.069E+03	4.564E+02	1.273E+05	8.555E+00
2002	2.771E+04	1.514E+07	1.017E+03	4.341E+02	1.211E+05	8.138E+00
2003	2.636E+04	1.440E+07	9.676E+02	4.130E+02	1.152E+05	7.741E+00
2004	2.508E+04	1.370E+07	9.204E+02	3.928E+02	1.096E+05	7.363E+00
2005	2.385E+04	1.303E+07	8.755E+02	3.737E+02	1.042E+05	7.004E+00
2006	2.269E+04	1.240E+07	8.328E+02	3.554E+02	9.916E+04	6.663E+00
2007	2.158E+04	1.179E+07	7.922E+02	3.381E+02	9.432E+04	6.338E+00
2008	2.053E+04	1.122E+07	7.536E+02	3.216E+02	8.972E+04	6.029E+00
2009	1.953E+04	1.067E+07	7.168E+02	3.059E+02	8.535E+04	5.735E+00
2010	1.858E+04	1.015E+07	6.819E+02	2.910E+02	8.119E+04	5.455E+00
2011	1.767E+04	9.653E+06	6.486E+02	2.768E+02	7.723E+04	5.189E+00
2012	1.681E+04	9.183E+06	6.170E+02	2.633E+02	7.346E+04	4.936E+00
2013	1.599E+04	8.735E+06	5.869E+02	2.505E+02	6.988E+04	4.695E+00
2014	1.521E+04	8.309E+06	5.583E+02	2.383E+02	6.647E+04	4.466E+00
2015	1.447E+04	7.903E+06	5.310E+02	2.266E+02	6.323E+04	4.248E+00
2016	1.376E+04	7.518E+06	5.051E+02	2.156E+02	6.014E+04	4.041E+00
2017	1.309E+04	7.151E+06	4.805E+02	2.051E+02	5.721E+04	3.844E+00
2018	1.245E+04	6.803E+06	4.571E+02	1.951E+02	5.442E+04	3.657E+00
2019	1.184E+04	6.471E+06	4.348E+02	1.856E+02	5.177E+04	3.478E+00
2020	1.127E+04	6.155E+06	4.136E+02	1.765E+02	4.924E+04	3.309E+00
2021	1.072E+04	5.855E+06	3.934E+02	1.679E+02	4.684E+04	3.147E+00
2022	1.019E+04	5.569E+06	3.742E+02	1.597E+02	4.456E+04	2.994E+00

Results (Continued)

Year	Carbon dioxide			NMOC		
	(Mg/year)	(m^3/year)	(av ft^3/min)	(Mg/year)	(m^3/year)	(av ft^3/min)
2023	9.698E+03	5.298E+06	3.560E+02	1.519E+02	4.238E+04	2.848E+00
2024	9.225E+03	5.039E+06	3.386E+02	1.445E+02	4.032E+04	2.709E+00
2025	8.775E+03	4.794E+06	3.221E+02	1.375E+02	3.835E+04	2.577E+00
2026	8.347E+03	4.560E+06	3.064E+02	1.308E+02	3.648E+04	2.451E+00
2027	7.940E+03	4.338E+06	2.914E+02	1.244E+02	3.470E+04	2.332E+00
2028	7.553E+03	4.126E+06	2.772E+02	1.183E+02	3.301E+04	2.218E+00
2029	7.184E+03	3.925E+06	2.637E+02	1.125E+02	3.140E+04	2.110E+00
2030	6.834E+03	3.733E+06	2.508E+02	1.071E+02	2.987E+04	2.007E+00
2031	6.501E+03	3.551E+06	2.386E+02	1.018E+02	2.841E+04	1.909E+00
2032	6.184E+03	3.378E+06	2.270E+02	9.687E+01	2.702E+04	1.816E+00
2033	5.882E+03	3.213E+06	2.159E+02	9.214E+01	2.571E+04	1.727E+00
2034	5.595E+03	3.057E+06	2.054E+02	8.765E+01	2.445E+04	1.643E+00
2035	5.322E+03	2.908E+06	1.954E+02	8.338E+01	2.326E+04	1.563E+00
2036	5.063E+03	2.766E+06	1.858E+02	7.931E+01	2.213E+04	1.487E+00
2037	4.816E+03	2.631E+06	1.768E+02	7.544E+01	2.105E+04	1.414E+00
2038	4.581E+03	2.503E+06	1.681E+02	7.176E+01	2.002E+04	1.345E+00
2039	4.357E+03	2.380E+06	1.599E+02	6.826E+01	1.904E+04	1.280E+00
2040	4.145E+03	2.264E+06	1.521E+02	6.493E+01	1.812E+04	1.217E+00
2041	3.943E+03	2.154E+06	1.447E+02	6.177E+01	1.723E+04	1.158E+00
2042	3.751E+03	2.049E+06	1.377E+02	5.875E+01	1.639E+04	1.101E+00
2043	3.568E+03	1.949E+06	1.310E+02	5.589E+01	1.559E+04	1.048E+00
2044	3.394E+03	1.854E+06	1.246E+02	5.316E+01	1.483E+04	9.965E-01
2045	3.228E+03	1.764E+06	1.185E+02	5.057E+01	1.411E+04	9.479E-01
2046	3.071E+03	1.677E+06	1.127E+02	4.810E+01	1.342E+04	9.017E-01
2047	2.921E+03	1.596E+06	1.072E+02	4.576E+01	1.277E+04	8.577E-01
2048	2.778E+03	1.518E+06	1.020E+02	4.353E+01	1.214E+04	8.159E-01
2049	2.643E+03	1.444E+06	9.701E+01	4.140E+01	1.155E+04	7.761E-01
2050	2.514E+03	1.373E+06	9.228E+01	3.938E+01	1.099E+04	7.382E-01
2051	2.391E+03	1.306E+06	8.778E+01	3.746E+01	1.045E+04	7.022E-01
2052	2.275E+03	1.243E+06	8.350E+01	3.564E+01	9.942E+03	6.680E-01
2053	2.164E+03	1.182E+06	7.943E+01	3.390E+01	9.457E+03	6.354E-01
2054	2.058E+03	1.124E+06	7.555E+01	3.224E+01	8.996E+03	6.044E-01
2055	1.958E+03	1.070E+06	7.187E+01	3.067E+01	8.557E+03	5.749E-01
2056	1.862E+03	1.017E+06	6.836E+01	2.918E+01	8.140E+03	5.469E-01
2057	1.772E+03	9.678E+05	6.503E+01	2.775E+01	7.743E+03	5.202E-01
2058	1.685E+03	9.206E+05	6.186E+01	2.640E+01	7.365E+03	4.949E-01
2059	1.603E+03	8.757E+05	5.884E+01	2.511E+01	7.006E+03	4.707E-01
2060	1.525E+03	8.330E+05	5.597E+01	2.389E+01	6.664E+03	4.478E-01
2061	1.450E+03	7.924E+05	5.324E+01	2.272E+01	6.339E+03	4.259E-01
2062	1.380E+03	7.537E+05	5.064E+01	2.161E+01	6.030E+03	4.052E-01
2063	1.312E+03	7.170E+05	4.817E+01	2.056E+01	5.736E+03	3.854E-01
2064	1.248E+03	6.820E+05	4.582E+01	1.956E+01	5.456E+03	3.666E-01
2065	1.188E+03	6.488E+05	4.359E+01	1.860E+01	5.190E+03	3.487E-01
2066	1.130E+03	6.171E+05	4.146E+01	1.770E+01	4.937E+03	3.317E-01
2067	1.075E+03	5.870E+05	3.944E+01	1.683E+01	4.696E+03	3.155E-01
2068	1.022E+03	5.584E+05	3.752E+01	1.601E+01	4.467E+03	3.001E-01
2069	9.723E+02	5.312E+05	3.569E+01	1.523E+01	4.249E+03	2.855E-01
2070	9.249E+02	5.053E+05	3.395E+01	1.449E+01	4.042E+03	2.716E-01
2071	8.798E+02	4.806E+05	3.229E+01	1.378E+01	3.845E+03	2.583E-01
2072	8.369E+02	4.572E+05	3.072E+01	1.311E+01	3.657E+03	2.457E-01
2073	7.960E+02	4.349E+05	2.922E+01	1.247E+01	3.479E+03	2.338E-01

Results (Continued)

Year	Carbon dioxide			NMOC		
	(Mg/year)	(m^3/year)	(av ft^3/min)	(Mg/year)	(m^3/year)	(av ft^3/min)
2074	7.572E+02	4.137E+05	2.779E+01	1.186E+01	3.309E+03	2.224E-01
2075	7.203E+02	3.935E+05	2.644E+01	1.128E+01	3.148E+03	2.115E-01
2076	6.852E+02	3.743E+05	2.515E+01	1.073E+01	2.994E+03	2.012E-01
2077	6.517E+02	3.560E+05	2.392E+01	1.021E+01	2.848E+03	1.914E-01
2078	6.200E+02	3.387E+05	2.276E+01	9.712E+00	2.709E+03	1.820E-01
2079	5.897E+02	3.222E+05	2.165E+01	9.238E+00	2.577E+03	1.732E-01
2080	5.610E+02	3.065E+05	2.059E+01	8.788E+00	2.452E+03	1.647E-01
2081	5.336E+02	2.915E+05	1.959E+01	8.359E+00	2.332E+03	1.567E-01
2082	5.076E+02	2.773E+05	1.863E+01	7.951E+00	2.218E+03	1.490E-01
2083	4.828E+02	2.638E+05	1.772E+01	7.564E+00	2.110E+03	1.418E-01
2084	4.593E+02	2.509E+05	1.686E+01	7.195E+00	2.007E+03	1.349E-01
2085	4.369E+02	2.387E+05	1.604E+01	6.844E+00	1.909E+03	1.283E-01
2086	4.156E+02	2.270E+05	1.525E+01	6.510E+00	1.816E+03	1.220E-01
2087	3.953E+02	2.160E+05	1.451E+01	6.193E+00	1.728E+03	1.161E-01
2088	3.760E+02	2.054E+05	1.380E+01	5.891E+00	1.643E+03	1.104E-01
2089	3.577E+02	1.954E+05	1.313E+01	5.603E+00	1.563E+03	1.050E-01
2090	3.402E+02	1.859E+05	1.249E+01	5.330E+00	1.487E+03	9.991E-02
2091	3.236E+02	1.768E+05	1.188E+01	5.070E+00	1.414E+03	9.504E-02
2092	3.079E+02	1.682E+05	1.130E+01	4.823E+00	1.345E+03	9.040E-02
2093	2.928E+02	1.600E+05	1.075E+01	4.588E+00	1.280E+03	8.599E-02
2094	2.786E+02	1.522E+05	1.022E+01	4.364E+00	1.217E+03	8.180E-02
2095	2.650E+02	1.448E+05	9.726E+00	4.151E+00	1.158E+03	7.781E-02
2096	2.521E+02	1.377E+05	9.252E+00	3.949E+00	1.102E+03	7.402E-02
2097	2.398E+02	1.310E+05	8.801E+00	3.756E+00	1.048E+03	7.041E-02
2098	2.281E+02	1.246E+05	8.371E+00	3.573E+00	9.968E+02	6.697E-02
2099	2.169E+02	1.185E+05	7.963E+00	3.399E+00	9.481E+02	6.371E-02
2100	2.064E+02	1.127E+05	7.575E+00	3.233E+00	9.019E+02	6.060E-02
2101	1.963E+02	1.072E+05	7.205E+00	3.075E+00	8.579E+02	5.764E-02
2102	1.867E+02	1.020E+05	6.854E+00	2.925E+00	8.161E+02	5.483E-02
2103	1.776E+02	9.703E+04	6.520E+00	2.783E+00	7.763E+02	5.216E-02
2104	1.690E+02	9.230E+04	6.202E+00	2.647E+00	7.384E+02	4.961E-02
2105	1.607E+02	8.780E+04	5.899E+00	2.518E+00	7.024E+02	4.719E-02
2106	1.529E+02	8.352E+04	5.612E+00	2.395E+00	6.681E+02	4.489E-02
2107	1.454E+02	7.944E+04	5.338E+00	2.278E+00	6.356E+02	4.270E-02
2108	1.383E+02	7.557E+04	5.078E+00	2.167E+00	6.046E+02	4.062E-02
2109	1.316E+02	7.188E+04	4.830E+00	2.061E+00	5.751E+02	3.864E-02
2110	1.252E+02	6.838E+04	4.594E+00	1.961E+00	5.470E+02	3.675E-02
2111	1.191E+02	6.504E+04	4.370E+00	1.865E+00	5.203E+02	3.496E-02
2112	1.133E+02	6.187E+04	4.157E+00	1.774E+00	4.950E+02	3.326E-02
2113	1.077E+02	5.885E+04	3.954E+00	1.688E+00	4.708E+02	3.164E-02

HAZEN AND SAWYER
Environmental Engineers & Scientists

TO:	Nancy Newell, P.E., City of Durham	DATE:	13 February 2008
FROM:	C. Michael Bullard, P.E.	REVISED:	11 March 2008
RE:	North Durham WRF Digester and Landfill Gas Utilization Study H&S Project No.: 30751-001-101		

1.0 Summary

1.1 Statement of Purpose

Hazen and Sawyer was tasked to evaluate utilization of biogas gas recovered from the landfill adjacent to the North Durham Water Reclamation Facility (NDWRF) to power process related equipment at the treatment facility. Specifically, Hazen and Sawyer was tasked to evaluate engine-driven equipment or microturbines for potential utilization of recovered biogas from the landfill. In addition to the landfill gas beneficial use study, Hazen and Sawyer was tasked to examine potential utilization of anaerobic digester gas for energy recovery beyond the current practice of driving gas-fired reciprocating engines attached to process air blowers in the existing treatment works.

1.2 Recommendation

Electrical power generation in both the 1.0 MW and 2.0 MW power increments appears to be an economically viable beneficial use of the landfill gas stream. Additional engineering development work is recommended to define project requirements, confirm environmental permitting requirements, and refine economic issues related to power production and generation to the Duke Energy grid.

2.0 Background

2.1 Gas Handling and Utilization Equipment

Digester gas and landfill gas handling equipment currently exists at the North Durham WRF (NDWRF). Existing digester gas and landfill gas equipment is described in the following sections.

2.2.1 Digester Gas

Currently, methane gas from the digesters is used to mix and heat digester contents. Additionally, digester gas fueled engine driven blowers can provide process air to sections of the wastewater treatment plant. Digester gas is also utilized to generate building heat for the Biosolids Handling Building and the "A-Side" Control Building via a heat recovery system associated with the engine driven blowers. Hot water boilers are also provided in the anaerobic digestion unit process to provide supplemental heating, beyond heat recovered from the engine driven blowers, for anaerobic digester process control. Lastly, surplus digester gas which is not utilized for digester heating or in the engine driven blower equipment is processed through waste gas flares installed on the NDWRF A-Side. Digester gas handling equipment installed at the North Durham WRF is summarized in **Table 2-1**.

Table 2-1
Digester Gas Handling Equipment

Engine Driven Blowers	
Manufacturer – Blower	Sutorbilt
Model – Blower	GFMBFBN
Maximum Speed – Blower	1125 rpm
Maximum Pressure – Blower	~ 9.0 psig
Manufacturer – Engine Driver	Waukesha
Model – Engine	F2895GU
Size – Engine	8 1/2 x 8 1/2
Hot Water Boilers	
Manufacturer	Cleaver Brooks
Model	CB700-125
Heat Capacity – Output	4,184,000 BTU/hr
Heat Capacity – Input	

Table 2-1 (Cont'd) Digester Gas Handling Equipment	
Digester Mixing Compressors	
Manufacturer	Nash
Model	SC4S
Speed	1170 rpm
Gas Flow Rate	270 SCFM
Discharge Pressure	13.1 psig
DG Compressor and Drying System	
Manufacturer	
Type	Multistage Centrifugal
Design Flow	400 SCFM
Design Pressure	3.5 to 7.0 psig
Waste Gas Flare	
Manufacturer	Oceco
Model	221
Flow Capacity (max)	24,000 CFH

2.2.2 Landfill Gas

Landfill gas (LFG) is collected via a system of gas wells and collection pipes located across the landfill cover area. Blowers located near the LFG waste gas flare provide a vacuum in the system which pulls gas from under the landfill cover and routes the LFG to the waste gas flare for combustion. Currently, 100% of the landfill gas collected in the system is routed to the waste gas flare. The landfill gas system is described in **Table 2-2**.

Table 2-2 Landfill Gas Handling Equipment	
Engine Driven Blowers	
Manufacturer – Blower	Hoffman
Model – Blower	38304C
Waste Gas Flare	
Manufacturer	John Zink
Model	B-F-907191-701
Flow Capacity (max)	3600 CFM

2.2 Digester and Landfill Gas Generation Rates

Gas generation rates from both the anaerobic digestion unit process and the landfill were prepared based on plant operating records for the anaerobic digester gas and from Title V emissions estimates for the landfill gas stream. Estimated gas production rates are summarized in the following sections.

2.2.1 Digester Gas

Digester gas generation rates are based on measurements provided by the NDWRF plant operations staff. Digester gas is currently generated at an average rate of approximately 200 SCFM. This rate should remain relatively constant barring any major process changes in the digesters.

2.2.2 Landfill Gas

Landfill gas generation rates were based on a computer estimation model [LANDGEM] and then corrected to correlate with data found in Title V emissions reports and data given by plant staff. The LANDGEM model was corrected to fit empirical data in two ways: 1) shifting the curve seven years into the future; 2) scaling the curve to 60% of its magnitude. Chronological shifting of the curve accounts for an apparent lag in the models prediction of peak digester gas production. Magnitude scaling of the gas generation rate curve accounts for fugitive emissions from the landfill which are not captured and routed to the waste gas flare. Typical values for landfill fugitive gasses range from 25% to 35% total gas production. These curves are shown in **Figure 2-1** alongside empirical data. It should be noted that the observed 1995 and 2005 gas production rates closely overlap the chronologically shifted, magnitude reduced gas production estimates.

~ 1326 @ 2008 CFM

~ 1250 @ 2009 CFM

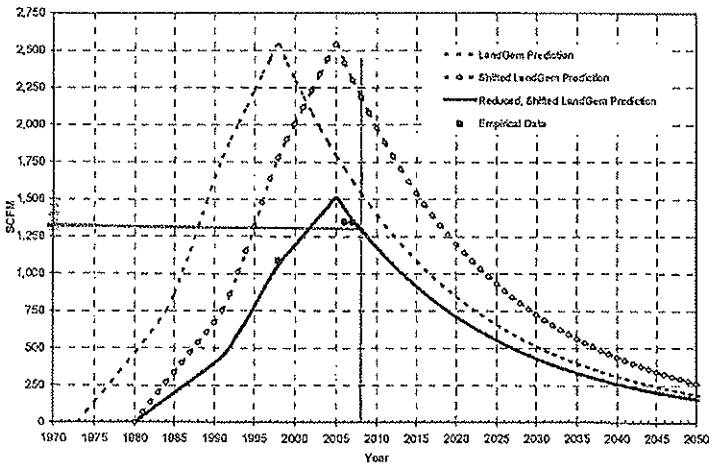

Figure 2-1
Estimated Landfill Gas Production Rate

Condensate Generation Calculation

CONDENSATE GENERATION CALCULATION FOR LANDFILL GAS MANAGEMENT SYSTEM

City of Durham Landfill

Durham, North Carolina

Table of Contents

- Purpose/Methodology/Assumptions/Results/References

744 Heartland Trail
Madison, WI 53717
Tel. (608) 831-4444 • Fax (608) 831-3334

PROJECT / PROPOSAL NAME / LOCATION: Durham Landfill, NC		PROJECT / PROPOSAL NO. 8021.01
SUBJECT: Condensate Generation Estimate		
PREPARED BY: D. Free	DATE: April. 7, 2009	FINAL
CHECKED BY: S. Inman	DATE: April 7, 2009	REVISION

CONDENSATE GENERATION CALCULATION FOR DURHAM LANDFILL

Purpose:

The purpose of the condensate generation calculation is to estimate the maximum quantity of condensate that could form in the landfill gas (LFG) header pipe system and landfill gas-to-energy system (LFGTE) under worst-case conditions.

Methodology:

Assumptions:

- As warm LFG exits the landfill and enters the LFG piping system it experiences cooling due to the cooler temperatures of the soils around the header pipe. As the LFG cools it loses water that it can no longer hold in the vapor phase. The LFG is also dehydrated as part of the LFGTE operations, which is worst-case moisture removal and condensate generation.
- Worst-case conditions assume the temperature around the pipe is at 32°F.
- The LFG enters the header pipe system at a maximum temperature of 100°F saturated with water vapor, and has a composition of 50 percent CH_4 and 50 percent CO_2 (by volume).
- LFG flow rate is constant at 1,200 cfm to be conservative.
- Specifically, the estimate assumes:
  - ΔT from 100°F → 32°F
  - All condensable water vapor is removed
  - The LFG is always saturated
  - Enthalpy released by condensation is neglected (conservative estimate)
- The blower vacuum is known or estimated.
- The actual volume of condensate formed in the header pipes should be less than the value calculated for several reasons:
  - The actual average LFG temperature at the wellheads will probably be less than 100°F.
  - The actual average temperature surrounding the header pipe will usually be greater than 32°F at the coldest. If the surrounding waste temperature is greater than 32°F, the change in LFG temperature will decrease, and condensate volume will decrease.

PROJECT / PROPOSAL NAME / LOCATION: Durham Landfill, NC		PROJECT / PROPOSAL NO. 8021.01
SUBJECT: Condensate Generation Estimate		
PREPARED BY: D. Free	DATE: April. 7, 2009	FINAL
CHECKED BY: S. Inman	DATE: April 7, 2009	REVISION

- The insulating properties of the pipe walls were neglected and it was assumed that the pipe wall temperature was equal to that of the surrounding fill.

- All of these assumptions are conservative in that they yield a greater condensation production and a lower LFG temperature at the system outlet.

Results:

The results of the condensate generation calculation are indicated in the table at the end of the following calculation.

References:

Perry, p. 20-5.

Standard Handbook of Chemistry and Physics, p. 6-10.

Condensate Generation Calculations

Calculation:

Calculate the humidity of the LFG entering the header system. The saturation humidity of a LFG is given by:

$$H_{ST} = \frac{P_s}{(P-P_s)} \frac{(MW_{VAP})}{(MW_{LFG})}$$ (Perry, p. 20-5)

Where:

	H_{ST} =	Saturation humidity at Temp. T (lb_m/lb_m dry gas)
	P =	Absolute pressure
	P_s =	Vapor pressure of H_2O at Temp. T
	MW_{VAP} =	Molecular weight of water = 18.0
	MW_{LFG} =	Molecular weight of LFG mixture = 30.0

Assume:

$P_{s\,100°F}$ = 6.6852 kPa = 50.176 mm Hg

(Standard Handbook of Chemistry and Physics, p. 6-10)

$P_{s\,32°F}$ = 0.6113 kPa = 4.588 mm Hg

Where: T(°C) = (T(°F) - 32) / 1.8

PROJECT / PROPOSAL NAME / LOCATION: Durham Landfill, NC		PROJECT / PROPOSAL NO. 8021.01
SUBJECT: Condensate Generation Estimate		
PREPARED BY: D. Free	DATE: April. 7, 2009	FINAL
CHECKED BY: S. Inman	DATE: April 7, 2009	REVISION

Therefore, 100°F= (100 - 32) / 1.8 = 37.78°C, and 32°F= (32 - 32) / 1.8 = 0°C

Assume:

P = 760 mm Hg (1 ATM) (atmospheric conditions)

Then:

$$H_{s\,100°F} = \frac{50.176}{760-50.176}\,\frac{(18.0)}{(30.0)} = 0.0424\ lb_m/lb_m \text{ dry LFG}$$

$$H_{s\,32°F} = \frac{4.587}{760-4.587}\,\frac{(18.0)}{(30.0)} = 0.00364\ lb_m/lb_m \text{ dry LFG}$$

The change in humidity of the gas due to cooling is:

$$\Delta H_s = H_{s\,100°F} - H_{s\,32°F} = 0.0424 - 0.00364 = 0.0388\ lb_m/lb_m \text{ dry LFG}$$

Assume a dry LFG density at temp. = 32°F of:

$$P_{LFG\,MIX\,32°F} = 0.5r = 0.5\,(1.9768 + 0.7167)$$

$CH_{4\,32°F}$ $CO_{2\,32°F}$ rCO_2 rCH_4

Where: r = density

$$P_{LFG\,MIX\,32°F} = 1.3468\ g/l = 0.0840\ lb_m/ft^3$$

Assuming a maximum total dry LFG flow rate (V_2) of approximately **1,200 cfm**. This value is converted to scfm (standard ft^3/min) as follows:

$$\frac{P_1V_1}{T_1} = \frac{P_2V_2}{T_2}$$

$$V_1\ (scfm) = \frac{V_2P_2T_1}{P_1T_2}$$

T(°R) = °F + 460

If the blower operates at -60 inches w.c. (1 psi = 27.72 inches w.c.), then,

744 Heartland Trail
Madison, WI 53717
Tel. (608) 831-4444 • Fax (608) 831-3334

PROJECT / PROPOSAL NAME / LOCATION: Durham Landfill, NC		PROJECT / PROPOSAL NO. 8021.01
SUBJECT: Condensate Generation Estimate		
PREPARED BY: D. Free	DATE: April. 7, 2009	FINAL
CHECKED BY: S. Inman	DATE: April 7, 2009	REVISION

P_2 = (-60 in. w.c.) (1 psig) / (27.72 in. w.c.) = -2.2 psig
-2.2 psig + 14.7 psi = 12.5 psia
P_1 = 14.7 psia (standard atmospheric pressure)
T_1 = 32°F = 492°R
T_2 = 100°F = 560°R

$$V_1 = \frac{(1{,}200\ ft^3)}{(min)} \frac{(12.5\ psia)}{(14.7\ psia)} \frac{(492°R)}{(560°R)} = 897\ scfm$$

The total maximum condensate volume is:

$$\frac{(897\ ft^3)}{(min)} \frac{(1{,}440\ min)}{(day)} \frac{(0.0840\ lbm\ gas)}{(ft^3)} \frac{(0.0388\ lbm\ condensate)}{(lb_m\ dry\ gas)} \frac{(1\ gal)}{(8.34\ lb_m)} = 505\ gal/day$$

System	Gas Flow Rate		Condensate (gal/day)
	(cfm)	(scfm)	
Total	1,200	897	505

Date: 4/7/09
By: DRF
Checked: SI

Appendix D
Approved Post-Closure Plan

CITY OF DURHAM SANITARY LANDFILL TRANSITION PLAN

DURHAM

1869

CITY OF MEDICINE

City of Durham, North Carolina

APPROVED
DIVISION OF SOLID WASTE MANAGEMENT
DATE 7/29/96 BY

April 1994

0759-022

MALCOLM PIRNIE

ENVIRONMENTAL ENGINEERS, SCIENTISTS & PLANNERS

CITY OF DURHAM SANITARY LANDFILL CLOSURE AND POST-CLOSURE PLAN

CITY OF DURHAM, NORTH CAROLINA

APRIL 1994

MALCOLM PIRNIE, INC.

11832 Rock Landing Drive, Suite 400
Newport News, Virginia 23606

0759-022-340

Transition Plan Amendment
December 1994

TABLE OF CONTENTS

		Page
1.0	**INTRODUCTION**	1-1
1.1	General	1-1
2.0	**CLOSURE**	2-1
2.1	Closure Activities	2-1
2.2	Final Cap	2-1
2.3	Estimate of Closure Area	2-3
2.4	Inventory of Wastes	2-3
2.5	Closure Schedule	2-4
2.6	Local Characterization Study	2-5
2.7	Interim Capacity Calculation	2-6
2.8	Compliance Report	2-7
	2.8.1 Location Restrictions	2-7
	2.8.2 Compliance Record	2-9
	2.8.3 Water Quality/Explosive Gas Monitoring Data	2-10
2.9	Closure Cost Estimate	2-10
3.0	**POST-CLOSURE**	3-1
3.1	Post-Closure Contact	3-1
3.2	Maintenance Plan	3-1
3.3	Inspection Plan	3-5
3.4	Monitoring Plan	3-7
3.5	Post-Closure Land Use	3-8
3.6	Post-Closure Cost Estimate	3-8

LIST OF TABLES

Table No.	Description	Following Page
2-1	Summary of Existing Cap Investigation	2-1
2-2	Summary of Potential Contaminant Sources	2-6
2-3	Potential Sources of Contamination	2-6
2-4	Interim Capacity Calculation	2- 6

TABLE OF CONTENTS

LIST OF TABLES
(Continued)

Table No.	Description	Following Page
3-1	Summary of Post-Closure Maintenance	3-1
3-2	Summary of Post-Closure Inspection	3-6
3-3	Summary of Post-Closure Monitoring	3-7

LIST OF FIGURES

Figure No.	Description	Following Page
1	Proposed Final Cap	2-1
2	Final Cap Details	2-1
3	Location Restriction Criteria - 100-Year Floodplain Ma	2-7

LIST OF APPENDICES

Appendix No.	Description
A	Landfill Cap Investigation
B	Low Permeability Soil Specification Section 02250
C	ERIIS Database Search - Potential Contaminant Sources
D	NCDEHNR Inspection Reports
E	Closure Cost Estimate
F	Post-Closure Cost Estimate

TABLE OF CONTENTS

LIST OF PLATES

Plate No.	Description
1	Local Characterization Study

3.0 POST-CLOSURE

3.1 POST-CLOSURE CONTACT

The City of Durham is the owner, permit holder and operator of the facility. The primary contact person and address is:

Mr. Don Robinson
Acting Director Sanitation Department
City of Durham
101 City Hall Plaza
Durham, North Carolina 27201

Telephone: (919) 560-4185

3.2 MAINTENANCE PLAN

In accordance with Rule .1629(c)(1) and Rule .1627(d), post-closure care will be conducted for 30 years. The following sections describe post-closure maintenance procedures, equipment requirements and material needs for preventative and corrective maintenance of active landfill systems including:

- Groundwater and surface water monitoring
- Gas control
- Gas monitoring
- Final cover
- Storm water management

Anticipated preventive and corrective maintenance requirements of these systems are summarized in Table 3-1 and the following sections.

Groundwater Monitoring System

The groundwater monitoring system will be maintained so as to remain operational in accordance with Rules .1631 through .1637. The system, shown on the Site Plan Sheet,

TABLE 3-1

SUMMARY OF POST-CLOSURE MAINTENANCE

CLOSURE SYSTEM	*SYSTEM COMPONENT*	*MAINTENANCE PROCEDURES*	*FREQUENCY*
Groundwater Monitoring	▪ Monitoring Wells	▪ Development in conjunction with water quality monitoring.	▪ Semi-Annual
	▪ Protective Casing	▪ N/A	▪ N/A
	▪ Lock Mechanism	▪ Lubricate	▪ As Necessary
Gas Control	▪ Extraction Wells	▪ Repair as necessary	▪ Annually
	▪ Gas Blower	▪ Check shaft packing and seals, repair as necessary.	▪ Monthly
		▪ Check oil level, add oil as required.	▪ Monthly
		▪ Check belts or drive, adjust as required.	▪ Monthly
		▪ Lubricate all bearings and grease fittings.	▪ Semi-Annually
		▪ Clean motor.	▪ Semi-Annually
		▪ Change oil.	▪ Annually
	▪ Moisture Separator	▪ Drain moisture trap, clean out collected debris, as necessary.	▪ Monthly

TABLE 3-1
(Continued)

SUMMARY OF POST-CLOSURE MAINTENANCE

CLOSURE SYSTEM	*SYSTEM COMPONENT*	*MAINTENANCE PROCEDURES*	*FREQUENCY*
Gas Control (Continued)	▪ Waste Gas Burner	▪ Fill propane tank, as required. ▪ Drain condensate traps. ▪ Clean flame trap. ▪ Check gas piping for leaks.	▪ Monthly ▪ Monthly ▪ Semi-Annually ▪ Semi-Annually
	▪ Valves and Appurtenances	▪ Exercise components and repair as required.	▪ Annually
Gas Monitoring System	▪ PVC piping, bentonite seal, valve and concrete pad	▪ Repair as necessary.	▪ As neccessary
Cap	▪ Final Cover	▪ Erosion Repair ▪ Re-vegetation	▪ As necessary
Storm Water Drainage System	▪ Storm Water Detention Basins	▪ Repair localized erosion ▪ Clear debris and sediment	▪ Semi-annual ▪ As necessary when sediment reaches 85 percent clean out elevation
	▪ Ditches, Reverse Slope Benches, Diversion Berms, Chutes ▪ Culverts	▪ Repair localized erosion ▪ Remove sediment ▪ Regrade ▪ Revegetate ▪ Remove debris or obstructions ▪ Clean-out via high pressure wash	▪ As necessary ▪ Semi-annual ▪ Annual ▪ As necessary ▪ Semi-annual ▪ As necessary

Sheet 1 of the Operation Plan drawings, is comprised of permanent, low maintenance, PVC monitoring wells with dedicated bladder sampling pumps. These PVC wells do not contain any other active components and will be maintained by monitoring well development coincident with groundwater quality sampling throughout the post-closure period. No other preventive maintenance of this system is required. Groundwater monitoring wells which sustain damage or become unable to provide representative samples will be replaced as necessary. This may include decommissioning and appropriate abandonment of any non-functional wells. Materials and equipment anticipated for well installation and/or decommissioning abandonment includes standard geotechnical drilling rig equipped with hollow stem augers, tri-cone rotary drilling bit, bentonite slurry and tremie pump. Bladder pumps will be subject to corrective maintenance as necessary to maintain.

Gas Control

The proposed gas control is shown on the Gas Monitoring and Collection Sheet, Sheet 4 of the Operation Plan drawings. The following information summarizes the anticipated preventive and corrective maintenance activities to be performed through the duration of the post-closure period.

Extraction Wells

The extraction wells will consist of 3-inch diameter High Density Polyethylene (HDPE) pipe. Wells will be spaced relatively uniformly across the landfill topdeck. The wells will be capped at the bottom, perforated for gas accumulation, screened through the waste, and surrounded with open graded coarse aggregate.

Preventive maintenance includes only an annual inspection of the extraction wells to determine the condition of the well head, valve, and flexible pipe. Corrective maintenance would consist of replacement of well head components as needed.

Gas Blower

A blower is proposed to extract gas from the wells and deliver collected gas to the adjacent flare.

Preventive maintenance for the blower should include the following:

- Check shaft packing and seals monthly. Under normal operating conditions, seals generally last up to 3 years.
- Inspect impeller vanes every 2 years. Replace if worn or show evidence of corrosion.

- Replace impeller vanes after 6 years of operation.
- Lubricate all bearings and grease fittings every 6 months.
- Check oil level at site glass monthly. Add to fill line as needed.
- Change oil annually.
- Inspect bearings annually. Replace after 6 years of operation.
- Check condition of drive mechanism monthly. Adjust as needed.

Corrective measures consist of replacing or repairing components as needed according to the preventive maintenance duties listed above.

Moisture Separator

A cyclone separator is proposed to remove and collect any moisture. Gas drawn from the landfill by the blower passes through the separator in a spiral pattern, forcing moisture out and down to be collected and drained.

Preventive maintenance consists of monthly moisture trap drainage and annual inspection of the internals of the separator to observe for any corrosion.

No corrective maintenance is anticipated.

Waste Gas Burner

An automatic ignition gas burner is proposed to ignite and burn the collected gas. A propane tank is proposed for the ignition pilot light. The blower forces the collected gas up through the flare and is ignited by the propane pilot. The system also includes a flame trap and back pressure regulator. A control panel performs all control functions automatically.

Preventive maintenance duties consist of the following:

- Refill propane tank as needed.
- Drain condensate traps monthly.
- Disassemble and clean flame trap (gas piping) semi-annually.
- Check all gas piping for leaks semi-annually. Repair as needed.

Corrective maintenance consists of repair and replacement of worn parts, as a result of the preventive maintenance inspections described above.

The City is currently reviewing the feasibility of recovery of landfill gas for use in the adjacent wastewater treatment plant. If it is determined that recovery is feasible, this system would operate either in lieu of or in parallel to the above mentioned control system.

Valves and Appurtenances

Valves and appurtenances proposed as part of the gas collection and flaring system should be exercised on an annual basis. Any components identified as damaged, corroded, or leaking during scheduled inspections will be repaired or replaced as necessary.

Gas Monitoring System

The gas monitoring system is comprised of a series of perimeter gas monitoring probes. A detail of the gas monitoring probe is shown on Sheet 5 of the Operation Plan drawings. During inspections of the gas monitoring probes, any damage to the probe will be repaired or replaced. If the probe is unrepairable, a new probe will be constructed adjacent to the existing probe.

Final Cap System

Landfill surface maintenance will be performed as necessary over the entire post-closure period. Signs of erosion, settling, cracking or other site maintenance problems detected during routine site inspections will be corrected as soon as possible. Eroded areas will be repaired by backfilling and stabilizing the effected areas or by providing additional drainage feature systems to prevent future erosion where settlement results in ponding of surface water, the cap will be regraded and re-vegetated to eliminate the ponding. All large areas without vegetation in the final cover will be reseeded and fertilized, as necessary, but not less than once every year.

Storm Drainage System

Storm water drainage systems shown on Sheet 3 of the Operation Plan drawings and described in detail in The Operation Plan, are comprised of passive components, including storm water detention basins, outfall structures, ditches, sideslope chutes, and reverse slope benches.

Preventive maintenance of the storm water detention basins and outlet structures will occur semi-annually, during late summer and early spring, prior to and following fall and winter periods which typically experience much higher rainfall events, and as required after heavy precipitation events. Sediment removal will occur annually to ensure adequate

capacity and function. Spillways and outlet structures will be cleared of all loose debris on an as needed basis. Basin sideslopes will be uniformly graded to their original design slope on an annual basis to minimize sloughing and potential impacts on storage capacity and water quality.

Corrective maintenance, including repair and/or replacement of damaged structures, will occur as needed for satisfactory performance.

3.3 INSPECTION PLAN

The following section describes post-closure inspection procedures, frequency and recordkeeping associated with the post-closure care of the following landfill closure systems:

- Groundwater monitoring
- Gas collection and flare
- Gas monitoring
- Landfill cap
- Storm drainage including run-on/run-off control devices such as storm water detention basins, outlet structures, ditches, chutes and reverse slope benches

Inspection of the landfill facility closure systems will be conducted by City personnel to prevent and/or detect malfunction or damage to system components. The following information will be recorded in conjunction with each inspection activity:

- Date and time of inspection
- Name of inspector
- Observation made
- Data measurements (if any)
- Recommended corrective measure (if any)

Inspection procedures, frequency and rationale are summarized in Table 3-2 and the following sections.

Groundwater Monitoring System

The groundwater monitoring system will be inspected on a semi-annual basis in conjunction with post-closure groundwater quality monitoring activities. The integrity of each well will be verified by visual inspection and observation of damage (if any) to the well installation, riser pipe, protective casing, and lock mechanism.

Gas Control System

Inspection of the gas control system will be inspected on a regular basis as described in Table 3-2. Visual inspection will be made of the condition of the extraction wells, gas blower, moisture separator, waste gas flare, and valves and appurtenances. Specifically, inspection will be made for any evidence of malfunction, corrosion, and operation of any of these components.

Gas Monitoring System

Inspection of gas monitoring probes will be performed prior to each monitoring event. The inspection will include examination of the PVC pipe, bentonite seal and valve for physical damage. Probes will also be examined for accumulation of water above the bentonite seal. Any excess water will be removed.

Final Cover System

Inspection of final cover system components will occur semi-annually for the first 5 years and annually throughout the remaining post-closure period, corresponding with site monitoring and other preventive maintenance activities, or on an as-needed basis following heavy precipitation events. Integrity of the final cover system will be evaluated over the entire landfill surface by visual inspection and observation of damage related to soil loss via erosion, differential settlement and resulting ponding of surface water, sloughing of surficial materials along slopes due to inadequate drainage of cover system, consistency and adequacy of vegetative cover condition.

Storm Water Drainage System

Storm water system components will be inspected on a semi-annual basis in late summer and late winter, prior to anticipated seasons with typically high precipitation levels, and subsequent to heavy rainfall events. Integrity of the drainage system components, including detention basins, ditches, culverts, diversion berms, release structures and reverse slope benches, as well as miscellaneous sediment and erosion control devices, will be verified

TABLE 3-2

SUMMARY OF POST-CLOSURE INSPECTION

CLOSURE SYSTEM	*SYSTEM COMPONENT*	*INSPECTION PROCEDURE*	*FREQUENCY*
Groundwater Monitoring System	▪ Monitoring Wells - Riser Pipe - Protective Casing - Lock Mechanism	▪ Visual inspection of damage, corrosion.	▪ Semi-Annual
Gas Control	▪ Extraction Wells	▪ Visual inspection for possible damage.	▪ Annually
	▪ Gas Blower	▪ Check shaft packing and seals.	▪ Monthly
		▪ Visual inspection of oil level.	▪ Monthly
		▪ Visual inspection of drive mechanism.	▪ Monthly
		▪ Measure pressure on either side.	▪ Monthly
		▪ Check gages via pitot tube.	▪ Monthly
		▪ Check bearings for wear.	▪ Annually
		▪ Check impeller vanes for wear.	▪ Bi-Annually
	▪ Moisture Separator	▪ Inspect condensate drainage system.	▪ Monthly
		▪ Internal inspection.	▪ Monthly ▪ Annually

TABLE 3-2
(Continued)

SUMMARY OF POST-CLOSURE INSPECTION

CLOSURE SYSTEM	*SYSTEM COMPONENT*	*INSPECTION PROCEDURE*	*FREQUENCY*
Gas Control (Continued)	▪ Waste Gas Burner	▪ Inspect propane tank status. ▪ Inspect gas piping for leaks. ▪ Inspect status of fire fighting equipment.	▪ Monthly ▪ Semi-Annually ▪ Semi-Annually
	▪ Valves and Appurtenances	▪ Inspect and exercise components for visable malfunction or leakage.	▪ Annually
Gas Monitoring Probe	▪ PVC Piping ▪ Bentonite Soil ▪ Valve	▪ Visual inspection of condition.	▪ Quarterly
Final Cover System	▪ Vegetation Cover ▪ Topsoil	▪ Visual inspection and observation of damage.	▪ Semi-Annual for first five years. ▪ Annual for remaining post-closure period or an as needed basis following heavy precipitation.

TABLE 3-2
(Continued)

SUMMARY OF POST-CLOSURE INSPECTION

CLOSURE SYSTEM	*SYSTEM COMPONENT*	*INSPECTION PROCEDURE*	*FREQUENCY*
Storm Water Drainage System	▪ Storm Water Detention Basins ▪ Ditches ▪ Culverts ▪ Chutes ▪ Release Structures ▪ Reverse Slope Benches ▪ Erosion and Sediment Control Devices	▪ Visual inspection and observation of damage.	▪ Semi-Annual

by visual inspection and observation of damage (if any) which would result or impact surface water flow and/or cause further soil loss or damage to structures. Specifically, visual inspection will be made for obstruction, accumulation of sediment or debris, vegetation stress, evidence of scour, erosion of channel lining and soils, as well as structural integrity and corrosion of release structures.

3.4 MONITORING PLAN

Post-closure monitoring activities and locations are shown on Table 3-3.

Post-closure activities will include monitoring of the following closure systems:

- Groundwater monitoring wells
- Storm water runoff
- Landfill gas

Groundwater Monitoring

Groundwater monitoring activities to be performed throughout the post-closure care period are summarized in the Water Quality Monitoring Plan. The plan indicates that groundwater monitoring wells will be monitored on a regular basis throughout the duration of the post-closure care period. These monitoring wells have been selected on the basis of their location relative to the landfill unit, and will be used to evaluate variations in groundwater quality and flow direction in the uppermost aquifer.

Landfill Gas Monitoring

Perimeter gas monitoring probes are shown on Sheet 4 of the Operations Drawings. All perimeter gas monitoring probes and structures will be monitored on a quarterly basis for percent lower explosive limit (percent LEL) and percent total volume (percent TV) of methane. All data will be recorded on a monitoring sheet and maintained on file at the landfill site.

In the event that any gas probe indicates a concentration of methane exceeding 25 percent LEL, contingency measures detailed in the Operations Plan will be taken to further evaluate the source of landfill gas and mitigate any detrimental effects.

TABLE 3-3

SUMMARY OF POST-CLOSURE MONITORING [1]

CLOSURE SYSTEM	*MONITORING LOCATION(S)*	*PARAMETERS*	*FREQUENCY*
Storm Water Management	▪ Storm Water Detention Basins	▪ Surface Water Quality	▪ Quarterly and/or following storm events for first year. ▪ Semi-annual basis after first year.
Gas Management	▪ Gas Monitoring Probes ▪ Buildings	▪ Methane Concentration (%LEL/%TV)	▪ Quarterly

[1] See Water Quality Monitoring Plan, for details of groundwater quality monitoring frequency and sampling protocol.

3.5 POST-CLOSURE LAND USE

The City of Durham plans a passive use of the landfill during the post-closure period. No disturbance will be made to the integrity of the final cap, waste containment systems, or monitoring systems. Following completion of the post-closure care period, the City shall notify the Solid Waste Section that a certification, signed by a registered Professional Engineer, has been placed in the operating record. The certification will verify that post-closure care has been completed in accordance with the post-closure plan.

3.6 POST-CLOSURE COST ESTIMATE

The capital cost estimate for post-closure activities for the City of Durham Sanitary Landfill is included in Appendix F. The estimated maximum annual total post-closure cost is approximately $256,300 (in 1994 dollars). Given a 30-year post-closure period, the estimated present worth of post-closure care and maintenance throughout the maximum anticipated post-closure period at year 1996 is approximately $8,477,000 (in 1996 dollars). The City will provide financial assurance for this amount in accordance with one of the financial instruments outlined in Rule .1628.2

Appendix E
Draft Operation Plan Outline and Job Description

DRAFT OUTLINE
Operations Plan
Landfill Gas-To-Energy System
Durham Sanitary Landfill
Durham, North Carolina

Table of Contents

1. Introduction 1-1

1.1 Background ..... ???
1.2 Scope ..... ???
1.3 Project Permit Management ..... ???

2. System Equipment and Operations Plan 2-1

2.1 General ..... ???
2.2 Existing Landfill Gas Collection System ..... ???
2.2.1 LFG Extraction Wells ..... ???
2.2.2 LFG Collection Header Network ..... ???
2.2.3 Back-up Blowers ..... ???
2.2.4 Back-up Flare ..... ???
2.2.5 Ancillary Equipment ..... ???
2.3 Landfill Gas-To-Energy System ..... ???
2.3.1 LFG Blower Skid System ..... ???
2.3.2 LFG Chiller (Dehydration) Skid System ..... ???
2.3.3 Engine Generators ..... ???
2.3.4 Electrical and Control Building ..... ???
2.3.5 Monitoring and Metering Systems ..... ???
2.3.6 Electrical Switchgear/Utility Interface ..... ???
2.3.7 Water Supply System ..... ???
2.3.8 Ancillary Equipment ..... ???
2.4 Condensate Management System ..... ???
2.4.1 Existing Condensate Management System ..... ???
2.4.2 Condensate Knock-out Scrubbers ..... ???
2.4.3 Condensate Tank/Lift Station ..... ???
2.4.4 Condensate Forcemain ..... ???
2.4.5 Ancillary Equipment ..... ???

3. Landfill Gas Control and Monitoring Plan 3.1

3.1 Existing Landfill Gas Collection System ..... ???

3.1.1 Well Monitoring ..... ???

3.1.2 Overall System Monitoring ..... ???

3.1.3 LFG System Interactions and Process Control ..... ???

3.1.4 Perimeter Gas Probe Monitoring ..... ???

3.1.5 Ancillary Monitoring ..... ???

3.2 Landfill Gas-To-Energy System Monitoring ..... ???

3.2.1 Blower Skid System Monitoring ..... ???

3.2.2 Chiller Skid Sytem Monitoring ..... ???

3.2.3 Engine Generator Systems Monitoring ..... ???

3.2.4 Back-up Blowers Monitoring ..... ???

3.2.5 Back-up Flare Monitoring ..... ???

3.2.6 Meter and Monitor (SCADA) Measurements ..... ???

3.2.7 Electrical Measurements ..... ???

3.2.8 Ancillary Monitoring ..... ???

4. Condensate Control and Monitoring Plan 4.1

4.1 Condensate Management Systems Monitoring ..... ???

4.1.1 Existing Condensate System Monitoring ..... ???

4.1.2 Condensate Knock-out Scrubbers Monitoring ..... ???

4.1.3 Condensate Tank/Lift Station Monitoring ..... ???

4.1.4 Condensate Forcemain Monitoring ..... ???

4.1.5 Ancillary Monitoring ..... ???

5. System Inspections and Maintenance Plan 5.1

5.1 General ..... ???

5.2 Existing Landfill Gas Collection System ..... ???

5.2.1 Landfill Gas Extraction Wells/Wellheads ..... ???

5.2.2 Landfill Gas Piping Network ..... ???

5.2.3 Back-up Blowers ..... ???

5.2.4 Back-up Flare ..... ???

5.2.5 Ancillary Equipment ..... ???

5.3 Landfill Gas-To-Energy System ..... ???

5.3.1 LFG Blower Skid System ..... ???

5.3.2 LFG Chiller Skid System ..... ???

5.3.3 Engine Generators ..... ???

5.3.4 Electrical and Control Building ..... ???

5.3.5 Monitoring and Metering Systems ..... ???

5.3.6 Electrical Switchgear/Utility Interface ..... ???

5.3.7 Ancillary Equipment ..... ???
5.4 Condensate Management System ..... ???
5.4.1 Existing Condensate Management System ..... ???
5.4.2 Condensate Knock-out Scrubbers ..... ???
5.4.3 Condensate Tank/Lift Station ..... ???
5.4.4 Condensate Forcemain ..... ???
5.4.5 Ancillary Equipment ..... ???
5.5 Overall Facility Condition ..... ???
5.5.1 Vegetated Surface Areas ..... ???
5.5.2 Crushed Aggregate Surface Areas ..... ???
5.5.3 Facility Fencing, Gates, and Signs ..... ???
5.5.4 Water Supply System ..... ???
5.5.5 Surface Water Management Systems ..... ???
5.5.6 Fencing and Signs ..... ???
5.5.7 Materials Inventory Management and Storage Areas ..... ???
5.5.8 Waste Management ..... ???
5.6 Maintenance Schedule Summary ..... ???
5.7 Operations Plan Update Requirements and Schedule ..... ???

6. Contingency Plan 6.1
6.1 Existing Landfill Gas Collection System ..... ???
6.1.1 Malfunctioning Surface Features ..... ???
6.1.2 Malfunctioning Subsurface Features ..... ???
6.1.3 Back-up Blowers Malfunctions ..... ???
6.1.4 Back-up Flare Malfunctions ..... ???
6.2 Landfill Gas-To-Energy System ..... ???
6.2.1 Blower Skid Malfunctions ..... ???
6.2.2 Chiller Skid Malfunctions ..... ???
6.2.3 Engine Generator Malfunctions ..... ???
6.2.4 Monitoring and Metering Malfunctions ..... ???
6.2.5 Electrical System Malfunctions ..... ???
6.2.6 Malfunctions ..... ???
6.2.7 Chiller Skid Malfunctions ..... ???
6.3 Condensate Management System ..... ???
6.3.1 Lift Station Malfunctions ..... ???
6.3.2 General Malfunctions ..... ???
6.4 Overall Facility ..... ???
6.4.1 Surface Condition Issues ..... ???
6.4.2 Facility Infrastructure Issues ..... ???
6.4.3 Spills ..... ???

7. Safety Training and Implementation Plan 7.1

7.1 General ..... ???
7.2 Landfill Safety ..... ???
7.3 Landfill Gas Collection System Safety ..... ???
7.4 Landfill Gas-To-Energy System Safety ..... ???
7.5 Electrical Safety ..... ???
7.6 Confined Space Safety ..... ???
7.7 Site Safety Protocol ..... ???
7.8 First Aid ..... ???
7.9 Training Documentation Records ..... ???
7.10 Incident Documentation and Records ..... ???

8. Reporting 8.1

8.1 Reporting Requirements and Schedule ..... ???
8.2 OM&M Progress Reports ..... ???
8.3 Inspection Reports ..... ???
8.4 Maintenance Reports ..... ???
8.5 Incident Reports ..... ???
8.6 Reporting Requirements and Schedule ..... ???

Operations Plan Attachments

List of Drawings

Drawings ??? LFG Collection System Plans ..... ???
Drawings ??? Landfill Gas-To-Energy System Plans ..... ???
Drawings ??? Condensate Management System Plans ..... ???
Drawings ??? Mechanical Plans ..... ???
Drawing ??? Electrical Plans ..... ???

List of Tables

Table ??? LFG Systems Monitoring Schedule ..... ???
Table ??? Condensate Management System Monitoring Schedule ..... ???
Table ??? Inspection Schedules ..... ???
Table ??? Maintenance Schedules ..... ???
Table ??? Facility Contact List ..... ???
Table ??? Troubleshooting Checklist ..... ???

List of Appendices

Appendix ? Landfill Gas Collection System Manufacturer's Information
Appendix ? Landfill Gas-To-Energy System Manufacturer's Information
Appendix ? Condensate Management System Manufacturer's Information
Appendix ? Facility Infrastructure Manufacturer's Information
Appendix ? Operation and Monitoring Forms
Appendix ? Maintenance Forms
Appendix ? Inspection Forms
Appendix ? Training Documentation Forms
Appendix ? Incident Documentation Forms
Appendix ? Spill Prevention and Countermeasures Plan (SPCMP)

Draft General Job Description - Closed Landfill Gas Technician

DRAFT General Job Description – Closed Landfill Gas Technician

I. Job Summary:

Independently performs a variety of technical duties requiring the application of standard scientific techniques. Individual must be capable of exercising independent judgment in operating, maintaining, and troubleshooting mechanical, electrical, air/gas handling equipment, and liquids/condensate (wastewater) pumping operations. This skilled labor position involves the operation and maintenance of landfill gas collection and control equipment, landfill gas-to-energy systems, and condensate/leachate pumping equipment.

II. Essential Duties and Responsibilities include the following:

To perform this job successfully, an individual must be able to perform each of the essential duties satisfactorily. Other minor duties may be assigned.

· Monitoring and adjusting landfill gas extraction wells.
· Collecting field data and managing data using a computer database to assure regulatory compliance. Use of Microsoft Excel spreadsheets is necessary.
· Operating, maintaining, and repairing landfill gas handling equipment including blowers, compressors, chillers, and flares.
Operating, maintaining, and repairing condensate pumping equipment and controls.
Operating, maintaining, and repairing landfill gas engine generator sets that produce electricity.
Operating and maintaining electronic and computer-based control systems including SCADA (supervisory control and data acquisition) and PLC (programmable logic controller) systems.
· Assisting Site Management, engineering staff, and contractors with landfill gas, condensate management, and control systems repairs or modifications and with regulatory compliance duties.
· Working outside

III. Supervisory Responsibilities

This job has no supervisory duties.

IV. Qualifications

The requirements listed below are representative of the qualifications necessary to perform the job.

A. Education and Experience

Required: A two- (2) year Associates degree in relevant discipline(s). Relevant job experience may be substituted.

Preferred: A two- (2) year Associates degree in relevant discipline plus additional or specialized training, and two to four years previous experience.

B. Certificates, Licenses, Registrations or Other Requirements

None required.

C. Other Knowledge, Skills or Abilities Required

· Knowledge of mechanical, electrical, and electrical control systems.
· Knowledge of air handling and air pollution control equipment is a plus.
· Ability and willingness to perform physical labor and to work outside for a majority of workday.
· Valid driver's license and good driving record necessary.
· Strong communication and organizational skills.
· Proficient with Microsoft computer programs.
· Excellent attendance and performance record.

Appendix F
Draft Equipment Specifications

UNISON

SOLUTIONS

City of Durham Landfill

Durham, NC

Gas Conditioning System

Unison Solutions
5451 Chavenelle Road
Dubuque, IA 52002

www.unisonsolutions.com

UNISON

SOLUTIONS

5451 Chavenelle Rd.
Dubuque, IA 52002

Phone: 563-585-0967
Fax: 563-585-0970

www.unisonsolutions.com

Field Services: 563-585-0967

TABLE OF CONTENTS

Section 1– Introduction

Section 2– Principle of Operation

Section 3– Blower Skid Component Information

a. BLR-331, Gas Blower
b. CHL-141, Chiller
c. FD-7##, Float Drain
d. FI-141, Flow Indicator
e. FIT-351, Flow Indicating Transmitter
f. FLT-321 Particulate Filter
g. FX-33#, Flex Hose
h. HX-341, Heat Exchanger
i. LI-721, Level Indicators
j. LS-7##, Level Switches
k. LZ-141, AutoVent
l. PDI-321, Pressure Differential Gauge
m. PI-141, Pressure Gauges
n. PI-3## Pressure Gauges
o. PIT-3##, Pressure Transmitters
p. PS-331, Pressure Switch
q. PSV-321, Pressure Safety Valve
r. STR-7##, Strainer
s. TE-3##, Temperature Element
t. TI-###, Temperature Gauge
u. TK-141, Expansion Tank
v. VA-311, Inlet Butterfly Valve
w. VB-### & VI-3##, Ball Valves
x. VC-331, Check Valve
y. VM-351, Modulating Valve
z. VY-3##, Butterfly Valves

Section 4– Drawings

a. Cover Page 1T-074-1-1
b. Mechanical Abbreviations/Symbols 1M-074-01
c. Electrical Abbreviations/Symbols 1E-074-01
d. Process & Instrumentation Diagram 3G-074-1-01
e. Parts List 3G-074-1-02
f. Skid Layout 6L-074-01
g. Electrical
    a. Control Panel Door Layout 4P-074-1-01
    b. One Line Diagram 4L-074-1-01
    c. Control Panel Interior 4P-074-1-02
    d. 480V Loads 4E-074-1-01

e.	Control Panel	4E-074-1-11 thru -14
f.	Control Panel	4E-074-1-21 & -22
g.	Control Panel	4E-074-1-31 & -32
h.	Control Panel	4E-074-1-41
i.	Control Panel	4E-074-1-51 thru -53
j.	Control Panel	4E-074-1-61
k.	Control Panel	4E-074-1-71 & -72
l.	Control Panel	4E-074-1-81

City of Durham, NC Landfill

MP Durham, LLC Purchase Order # MPD 0100

We are pleased to submit for your review this design for a gas conditioning system. Enclosed you will find a description of the system operation, detail of the system components, and our engineering drawings. We ask that you review and approve the enclosed materials. If changes or comments are required, please mark-up one copy of the submittal and return it to us.

This system will arrive in multiple pieces. The electrical control panel will be separate from the skid mounted equipment and must be mounted in a non-classified area. The blower, heat exchanger, particulate scrubber and piping will be skid mounted. Installation requirements will include:

1. Setting the skid, piping the gas and condensate connections.
2. Installing the flow indicating transmitter in the field piping (due to inlet and outlet straight pipe requirements)
3. Providing a 120 VAC feed to the electrical control panel and wiring between the electrical control panel and gas conditioning equipment.
4. Installing/wiring of the Unison provided VFD in the MCC.
5. Wiring and piping of the chiller in a non-classified location

Mechanical and electrical interconnection diagrams will be provided prior to shipment of the equipment.

We feel that our knowledge and experience with biogas will allow us to build a reliable gas drying system for the biogas stream. We look forward to working with you and anticipate a successful installation. If you have any questions or need further information, please do not hesitate to call me (563) 585-0901.

Regards,

Eric D. Dreier
Project Engineer

10/16/2008

Principle of Operation
Gas Conditioning System

This system is designed to treat and compress 1,000 scfm of digester gas at 10"WC and 100°F, saturated, to a final delivery pressure of 5.0 psig and temperature of 80°F. This system will consist of Gas Drying and Booster Skid, Chiller, and a remote mounted Control Panel. All components on the gas drying and booster skid will be pre-piped and pre-wired to junction boxes.

The incoming gas will first pass through a particulate scrubber (FLT-321). The gas will then enter the blower, which will compress the gas to approximately 5.5 psig. The hot gas leaving the blower will enter the first stage in the gas drying heat exchanger HX-341 to reheat cold gas from stage two. The hot gas will then flow to the second stage of the heat exchanger (using 50/50 ethylene glycol and water) and be cooled to a dew point of 40°F. Next, the dry gas will be reheated to 80°F. The clean dry gas will then be delivered at 5.0 psig.

The instrumentation and controls have been designed for safety and ease of trouble-shooting. The system will shut down if any of the following conditions occur: low inlet gas pressure, high blower temperature or pressure, high heat exchanger drain level, high particulate scrubber drain level or high/low delivery pressure. Manual instrumentation has been installed to help trouble-shoot any malfunctions. These gauges include:

- Inlet gas pressure and temperature
- Blower outlet pressure and temperature
- Gas saturation temperature
- Pressure drop across particulate scrubber
- Gas delivery pressure and temperature
- Glycol pressures and temperatures
- Glycol flow rate

EAIQ3940

Model 61

HSI MULTISTAGE CENTRIFUGAL BLOWERS

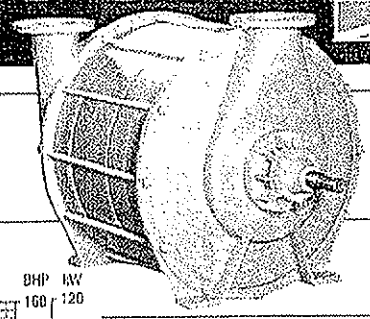

General Performance

MODEL 61 BLOWER

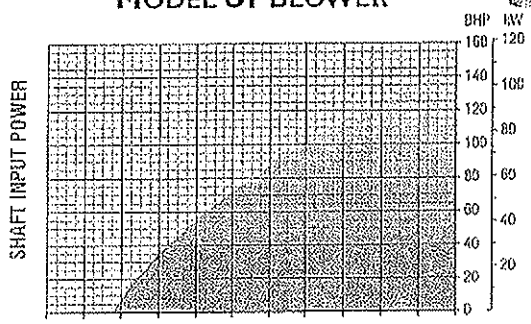

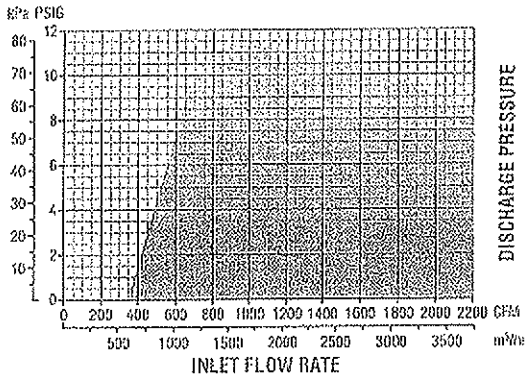

MODEL 61 EXHAUSTER

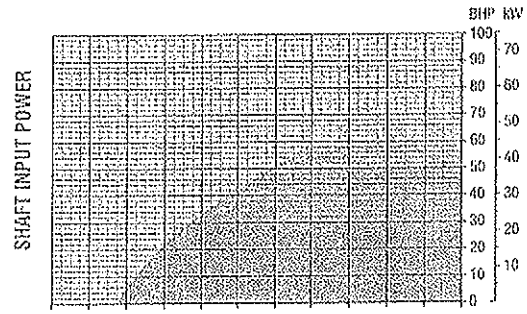

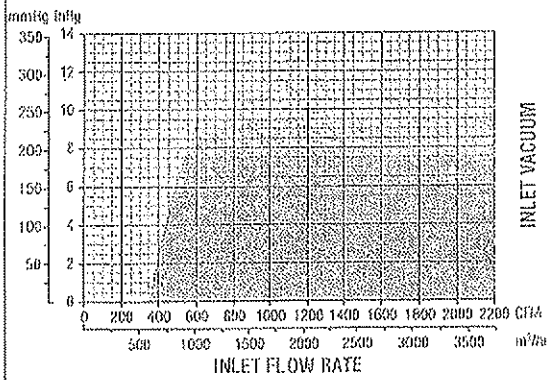

Specifications Standard

TECHNICAL DATA

Number of Stages	1 through 10
Inlet Connection	6" (152.4 mm) flange, ASA 125# / ANSI 150# drilling
Outlet Connection	6" (152.4 mm) flange, ASA 125# / ANSI 150# drilling
Operating Speed	3550 RPM (60 Hz), 2960 RPM (50 Hz)
Casing Pressure	20 PSIG (1.41 kg/cm²)
Seals (air)	Labyrinth type
Seals (gas)	Stuffing box type/custom available
Bearings	Ball, 10-year minimum life per AFBMA L_{10} standard
Lubrication	Grease (oil available)
Impeller Diameter	22.00 in (558.8 mm)
Impeller Tip Speed	341 ft/s (104 m/s) @ 3550 RPM
First Critical Speed	4560 RPM (9-stage)
Drive Type	Direct coupled or Belt driven, Inlet driven (standard) or Outlet driven
Shaft End	1.875 in (47.63 mm) diameter at coupling
Vibration Tolerence	.25 in/s (6.4 mm/s) ISO overall specification, 1.25 mils (0.03 mm) peak to peak
Rotor Balance	Military standard 167-1. Individual impellers statically and rotating assembly dynamically balanced

MATERIALS OF CONSTRUCTION

Casing	Cast iron ASTM A48 grade 25/30
Bearing Caps & Housings	Cast iron ASTM A48 grade 25/30
Oil Reservoir	Cast iron ASTM A48 grade 25/30
Shaft	Carbon steel AISI 4140 (stainless steel available)
Impellers	Cast aluminum ANSI AA319/356 or fabricated aluminum ANSI AA6061 with cast Al AA356 hub stainless steel/custom alloys available
Seals (air)	Cast iron ASTM A48 grade 30 with lead babbitt insert Zinc-Alloy, ZA-12
Seals (gas)	Cast aluminum ANSI AA319 stuffing box with braided packing
Tie Rods	.75 in (19.1 mm) diameter, high strength steel ASTM A193-B7/B7M available
Blower Base	Welded structural steel ASTM A36 ASME/AWS D1.1 WPS's available
Motor Pedestal	Welded steel plate ASTM A36
Joint Sealing Compound	RTV silicone
Base Isolation Pads	Neoprene rubber
Finish	HSI standard

Curves are based on atmospheric conditions of 1 Atm, 68F/20C, 36% RH, and 3550 rpm

MODEL 61 MULTISTAGE CENTRIFUGAL BLOWER

Inlet and Outlet Orientation Options

The orientation of the inlet and outlet is selectable from any of three different positions, as viewed when facing the exterior of the part:

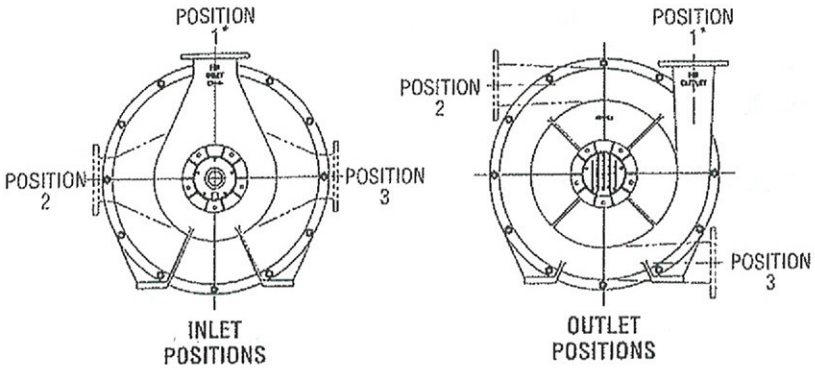

*Standard configuration.

Weight and Inertia

Model	Weight* lb	Weight* kg	Wk² lb-ft²	Wk² kg-m²
6101	870	395	8	0.35
6102	1120	508	16	0.68
6103	1370	621	24	1.02
6104	1620	735	32	1.35
6105	1870	848	40	1.68
6106	2120	962	48	2.02
6107	2370	1075	56	2.35
6108	2620	1188	63	2.68
6109	2895	1313	71	3.02

*Approximate weight for blower only.

General Arrangement

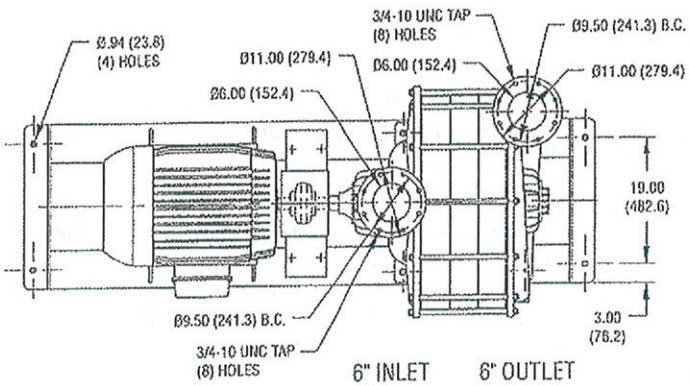

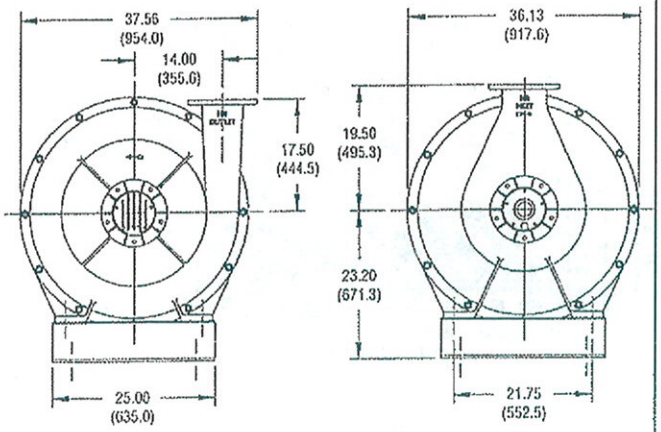

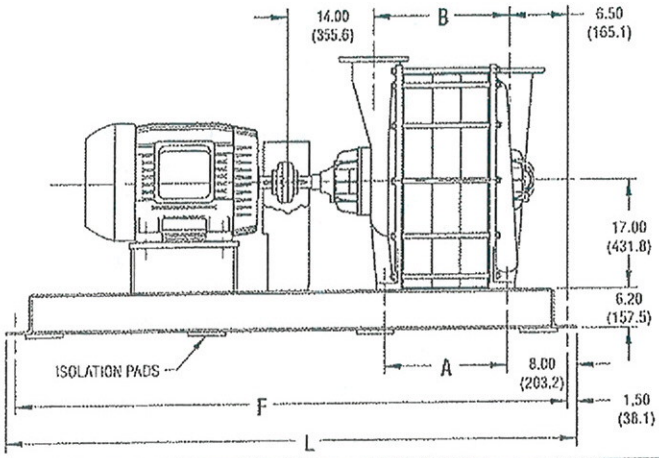

Model	Dimensions* A	B	F†	L†
6101	6.00 (152)	8.13 (206)	63 (1600)	66 (1676)
6102	10.50 (267)	12.63 (321)	63 (1600)	66 (1676)
6103	15.00 (381)	17.13 (435)	75 (1905)	78 (1981)
6104	19.50 (495)	21.63 (549)	75 (1905)	78 (1981)
6105	24.00 (610)	26.13 (664)	88 (2235)	91 (2311)
6106	28.50 (724)	30.63 (778)	88 (2235)	91 (2311)
6107	33.00 (838)	35.13 (892)	88 (2235)	91 (2311)
6108	37.50 (953)	39.63 (1006)	99 (2515)	102 (2591)
6109	42.00 (1067)	44.13 (1121)	99 (2515)	102 (2591)

*Dimensions in inches and (millimeters) and are approximate. Do not use for construction purposes.
†Dimension may vary depending on motor frame size.

HSI MULTISTAGE CENTRIFUGAL BLOWERS

Houston Service Industries, Inc.
7901 Hansen Rd., Houston, Texas 77061
713-947-1623
800-725-2291
Fax: 713-947-6409
www.houserv.com
hsi@hsiblowers.com

E-TS-126-001-03/06

EAIQ 3940
Rev A
10-10-08

Maximize®
Blower/Exhauster Design Datasheet

Datasheet No.: 27026
Design Date : 10/10/2008
Quote/Job No.:
Prepared By : mwells

Customer

Engineering America

Project

Site Data

Elevation: 800 ft a.s.l.

Gas Data

MW: 30.026
K : 1.2748 Cp: 0.3154

Gas	Pct
Methane (CH4)	50.000
Carbon Dioxide (CO2)	50.000

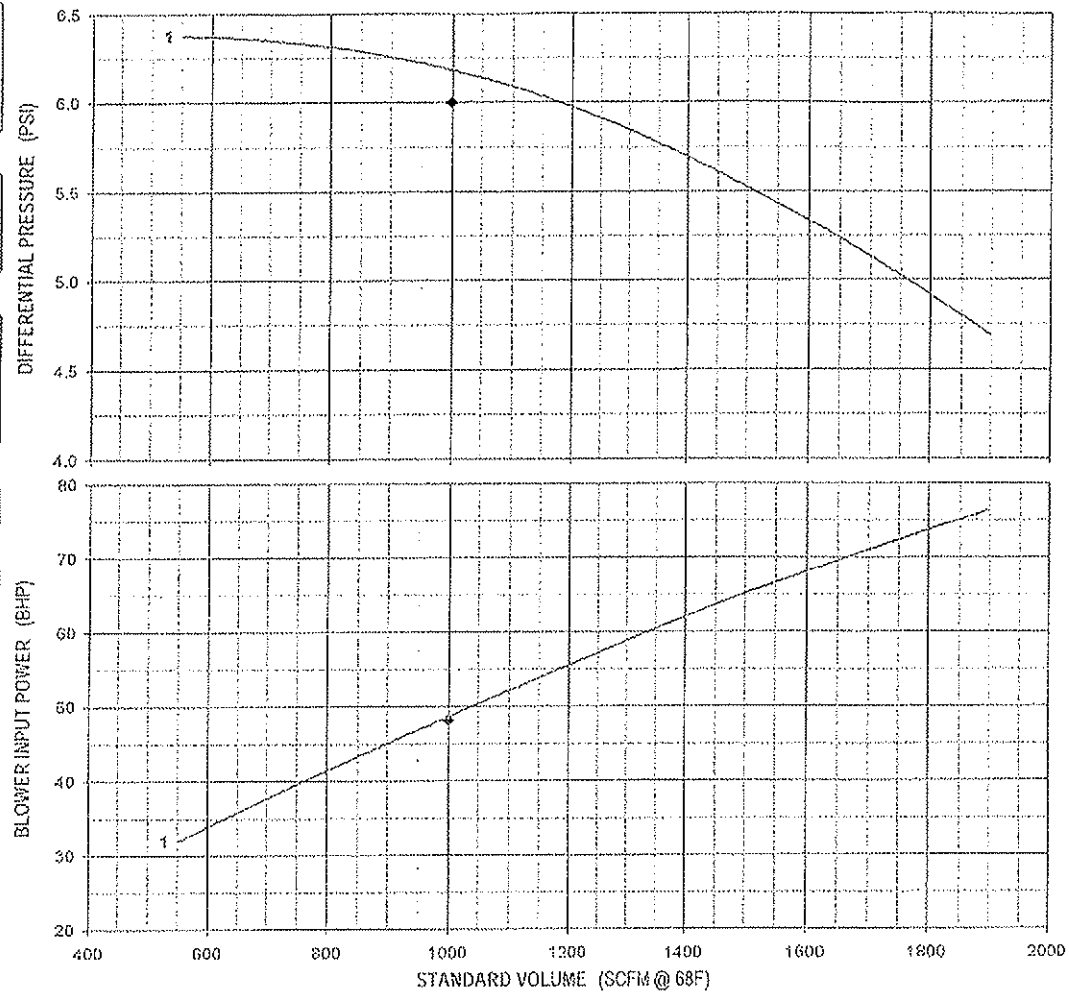

Curve Data

1. Primary Curve

EXHAUSTER	Model		HSI 6106
	Configuration		
	Impeller 1		(4) 5021
	Impeller 2		(2) 5011
	Impeller 3		
	Driver		
	Control Method		
CONDITIONS	Op. Speed	[RPM]	3,550
	Inlet Throttling	[valve/clsd]	none
	Bar. Pressure	[PSIA]	14.276
	Disch. Pressure	[PSIG]	6.00
	Inlet Temp.	[°F]	100.00
	Inlet Humidity	[% RH]	100.0
PERFORMANCE	Volume (Std.)	[SCFM]	1000.0
	Volume (Inlet)	[CFM]	1149.5
	Inlet Vacuum	[inWC]	0.010
	Diff. Pressure	[PSI]	6.00
	Power	[BHP]	48.12
	Efficiency	[%]	55.63
	Disch. Temp.	[°F]	180.58
	Rise to Surge	[PSI]	0.37
	Turndown	[%]	43.45
SURGE	Surge Pressure	[PSI]	6.37
	Surge Volume	[SCFM]	550.7

HSI, Inc. • 7901 Harwin Rd • Houston, Texas 77061 • Office 713-947-1623 • Fax 713-947-6409 • Toll Free 800-725-2281 • www.hsiblowers.com • sales@hsiblowers.com

Models 180-LD & 181-LD

Free Floating Lever Liquid Drainers
Entwässerer mit Freischwingendem Hebelmechanismus
Purgeurs de Liquide à Levier Libre Non-Guidé
Drenadores de Líquido con Palanca de Flotación Libre
Vloeistoflozers - met Bolvlotter
Scaricatori di Liquido da Gas in Pressione

These instructions should be used by experienced personnel !
Diese Gebrauchsanweisung ist durch Fachpersonal zu benutzen !
Ces instructions devraient être utilisées par du personnel expérimenté !
¡Estas instrucciones deben ser utilizadas por personal experimentado !
Onderhoud uitsluitend uit te voeren door ervaren personeel !
Queste istruzioni devono essere utilizzate da personale esperto !

PRODUCT DESCRIPTION - PRODUKTBESCHREIBUNG - DESCRIPTION DU PRODUIT DESCRIPCION DEL PRODUCTO - PRODUKT OMSCHRIJVING - DESCRIZIONE DEL PRODOTTO

Model shown on the picture: 181-LD - Die Abbildung zeigt das Modell 181-LD - Photo: modèle 181-LD
Modelo mostrado en la fotografía: 181-LD - Model op foto: 181-LD - Modello in figura: 181-LD

GB Armstrong Stainless Steel Free Floating Lever Liquid Drainer
3 Connections (Side Inlet - Top Gas Outlet - Side Liquid Outlet)

D Armstrong Entwässerer mit Freischwingendem Hebelmechanismus aus Edelstahl
3 Anschlußarten (Seitlicher Einlaß - Entlüftung Oben - Seitlicher Unten)

F Purgeur de Liquide en Acier Inoxydable, à Levier Libre et Non-Guidé
3 Raccordements (Entrée sur le Côté - Évent Dessus - Liquide sur le Côté)

E Drenador con Palanca de Flotación Libre Armstrong en Acero Inoxidable
3 Conexiones (Entrada Lateral - Salida de Gas Superior - Salida de Liquido Lateral)

NL Armstrong Roestvrijstalen met zwevend draaipunt
3 Aansluitingen (Zijde Inlaat - Top Ontluchting - Zijde Vloeistof Uitlaat)

I Scaricatore di Liquidi da Gas in Pressione In Acciaio Inossidabile
3 Connessioni (Entrata Laterale - Uscita Aria in Alto - Scarico Liquido/Bilanciamento Laterale)

For detailed material specifications, options, approximate dimensions and weights, see Armstrong literature or consult your local Representative.

Für detaillierte Werkstoffangaben, Zubehör, Abmessungen und Gewichte, sehen Sie die Armstrong Datenblätter oder fragen Sie Ihre Armstrong-Vertretung.

Pour toute spécification détaillée des matières, options, dimensions et poids, veuillez vous référer à la littérature Armstrong ou prendre contact avec votre Représentant local.

Para especificaciones de materiales detalladas, opciones, dimensiones aproximadas y pesos, ver catálogos Armstrong o consultar con su Representante local.

Voor gedetailleerde materiaal specificaties, afmetingen en gewichten, zie de Armstrong documentatie of neem contact op met uw plaatselijke Vertegenwoordiger.

Per la specifica dettagliata dei materiali, accessori opzionali, dimensioni e pesi approssimativi, vedere la documentazione appropriata o contattare il Distributore locale.

INSTALLATION - INSTALLATIONSANWEISUNG - INSTALLATION
INSTALACION - INSTALLATIE - INSTALLAZIONE

Model shown on the drawing: 181-LD - Die Zeichnung zeigt das Modell 181-LD - Schéma: modèle 181-LD
Modelo mostrado en el dibujo: 181-LD - Model op tekening: 181-LD - Modello in figura: 181-LD

Possible connections: screwed, socketweld or flanged - Mögliche Anschlußarten: Muffengewinde, Schweißmuffen oder Flansche
Raccordements possibles: taraudé, à souder ou à brides - Conexiones posibles: roscada, SW o bridada
Mogelijke aansluitingen: draad, las of flens - Connessioni disponibili: filettate, tasca a saldare o flangiate

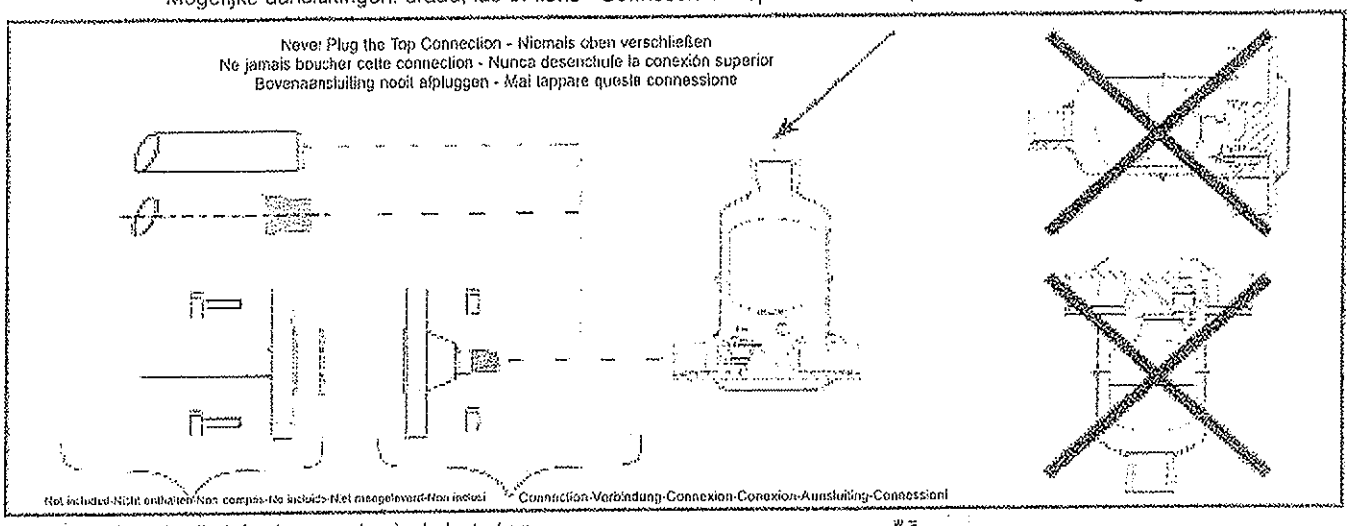

For detailed hookups and adapted start-up and shut-down procedures, see Armstrong literature or consult your local Representative.

Für detaillierte Informationen über Installation, Inbetriebnahme und Außerbetriebnahme sehen Sie die Armstrong Datenblätter oder fragen Sie Ihre Armstrong-Vertretung.

Pour plus de détails à propos des procédures de démarrage et d'arrêt, ainsi que pour l'installation, veuillez vous référer à la littérature Armstrong ou prendre contact avec votre Représentant local.

Para posibilidades de conexionado y procedimientos de parada y puesta en marcha, ver catálogos Armstrong o consultar con su Representante local.

Voor gedetailleerde montage en installatie instructies zie het betreffende Armstrong documentatieblad of neem contact op met uw plaatselijke Vertegenwoordiger.

Per procedure dettagliate di collegamento, d'avviamento e di fermata, vedere la documentazione Armstrong o consultare il Distributore locale.

START-UP PROCEDURE (Side Inlet - Top gas outlet - Bottom liquid outlet) - INBETRIEBNAHME (seitlicher Einlaß - Entlüftung oben - Ablauf unten) PROCEDURE DE DEMARRAGE (Entrée sur le côté - Event dessus - Sortie liquide vers le bas) - PROCEDIMIENTO DE PUESTA EN MARCHA (Entrada lateral - Salida de gas superior - Salida de líquido inferior) - OPSTARTPROCEDURE (Zijde inlaat - Top ontluchting - Bodem vloeistof uitlaat) - PROCEDURA D'AVVIAMENTO (Entrata laterale - Uscita alto - Scarico liquido/Bilanciamento sul fondo)

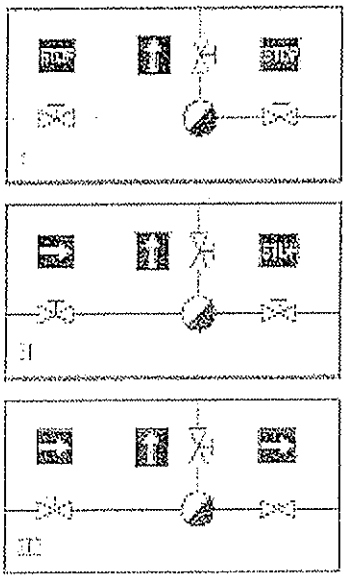

SHUT-DOWN PROCEDURE (Side Inlet - Top gas outlet - Bottom liquid outlet) - AUSERBETRIEBNAHME (seitlicher Einlaß - Entlüftung oben - Ablauf unten) - PROCEDURE D'ARRET (Entrée sur le côté - Event dessus - Sortie liquide vers le bas) - PROCEDIMIENTO DE PARADA (Entrada lateral - Salida de gas superior - Salida de líquido inferior) - UIT BEDRIJFNAME (Zijde inlaat - Top ontluchting - Bodem vloeistof uitlaat) - PROCEDURA DI FERMATA (Entrata laterale - Uscita alto - Scarico liquido/Bilanciamento sul fondo)

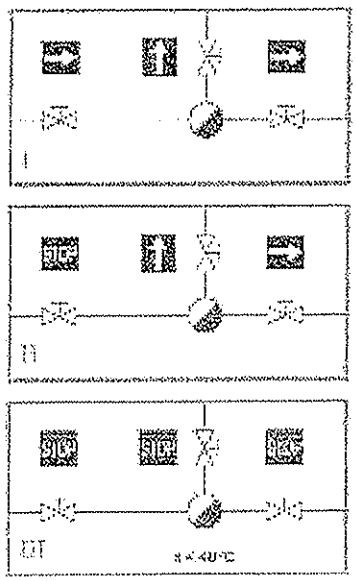

Armstrong International S.A., Parc Industriel des Hauts-Sarts, 4040 Herstal - Belgium Ph: +32.4.240.90.90 Fax: +32.4.240.40.33

PROPOSAL

October 14, 2008

Proposal # 81224 JMOEM
Revised October 14, 2008

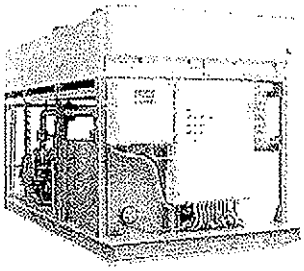

OACS-80D shown with optional tank heater

Mr. Eric Dreier
Unison Solutions Incorporated
5451 Chavenelle Rd.
Dubuque, IA 52002

Telephone: 563-585-0967
Fax: 563-585-0970
eric.dreier@unisonsolutions.com

Dear Mr. Brotherton:

At your request, we are pleased to offer the following ADVANTAGE proposal.

RE: Dunham NC 308kBtu/hr 50%EG 35°F LFT & 105°F Ambient

Outdoor Air Condensed Chiller System,
Model OACS-50D-MZC-2P, 460/3/60 .....$ 59,780 NET OEM Price

Features:

- Two independent air-cooled refrigeration circuits using R22 refrigerant
  - 360kBtu/hr cooling 75 GPM 50%EG from ~ 44.6°F to 35°F
  - Utilizing tandem scroll compressors per circuit
    - Compressor staging & hot gas bypass capacity staging to 25%
    - Crankcase heater
    - Suction line accumulator
    - Refrigerant discharge check valve
  - Two air cooled condensers
    - Horizontally mounted with vertical air discharge
    - Refrigerant piped and charged at factory (HCFC22 refrigerant)
    - Designed with ambient fan controls to -20°F
- Integral 200 gallon insulated stainless steel tank (wetted surfaces)
  - Non-ferrous divided reservoir with sight glass
  - Drain valve
  - Tank service cover
- PP-7.5, 7½ HP process pump #52, 5¾" IMP (75 GPM @ 60 PSI; 150 GPM @ 45 PSI)
  - TEFC motor with pre-wired motor starter
  - Suction & butterfly valve
  - "To process" pressure gauge
  - Triple duty discharge valve
- EP-5, 5 HP evaporator pump (120 GPM @ 35 PSI)
  - TEFC motor with pre-wired motor starter
  - Suction & discharge butterfly valves
- NEMA 4 Central control cabinets *(304 Stainless steel primary &microprocessor cabinets)*
  - Multi-zone instrument (capable of controlling six individual zones)
  - Compressor lead-lag switch per zone
  - Refrigerant zone lead-lag
  - Fused pump starters, compressor contactors & transformer
  - Pump lights & operators
  - Line voltage & phase monitor
  - Multi-tap control circuit transformer
  - Visual alarm
  - High fluid temperature shut down system
  - UL labeled electrical panel

Continued…

ADVANTAGE®
MAKING WATER WORK ™ since 1977

PROPOSAL

Mr. Adam Brotherton
Unison Solutions

October 14, 2008
page 2

Features: continued…

- Painted welded frame construction: includes 2-coats primer & 2-coats paint
- System designed for outdoor installation utilizing 30% EG
- *3" FPT process connections*
- Approximate dimensions: 99"H x 96"W x 140"L
- 132 Full load amps; 100 Run load amps; 460/3/60 power supply
- Approximate weight: 7,500lbs
- Warranty: 16 months from ship date or 12 months from start-up, parts & labor

Options:		NET OEM Price
1.	SP-7.5, 7½ HP standby pump & 3-pump manifold	$ 3,620
2.	50' remote display (for indoor monitoring)	$ 644
3.	4 year compressor warranty for parts only	$ 3,360
4.	200 AMP flange mount disconnect	consult factory
5.	Heresite coated on copper lines	$ 1,200
6.	Heresite coated condensers	$ 2,608

Estimated shipment lead-time: 9 to 11 Weeks ARO, subject to prior sales.
Terms: Net 30 days, subject to credit approval, or
4% discount available for full payment with order, or
2% discount for full payment before shipment.
Quoted prices do not include applicable sales tax.
Please provide tax exemption certificate with your order or tax will be added.
A written confirming purchase order is required.
FOB Greenwood, IN Freight collect.
This quotation is valid for 30 days from the above date.

If you have any questions, please do not hesitate to contact us at ADVANTAGE at 317/887-0729.

Sincerely,

Jeff Manifold
OEM Sales Manager

Encl.

JM/lj

MAX FLOW SIZES FROM 10 TO 160 GPM (60 TO 600 LPM)	MAX LIQUID PRESSURE 300 PSI	(20.69 BAR)	MN SERIES
	MAX LIQUID PRESSURE 500 PSI	(34.48 BAR)	MM SERIES
	MAX LIQUID PRESSURE 2000 PSI	(137.93 BAR)	MH SERIES

UNIVERSAL® Flow Meters

A Medium Vane-Style For Liquids

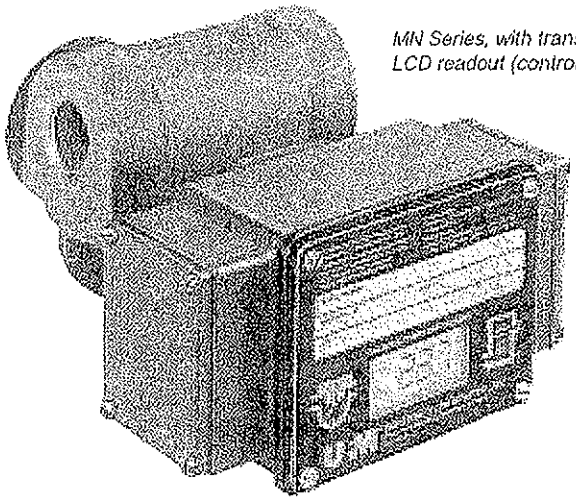

MN Series, with transmitter and LCD readout (control box TTL).

CSA Certified NRTL/C

CE Marked (as noted)

NIST Traceable Calibration Certificate Available

DESCRIPTION

These variable-area flow meters have a spring-loaded vane that swings open to accomindate more flow. Mounting is in-line and in any position. Straight pipe runs before or after the meter are not required. The all-mechanical sensing system responds quickly and directly drives the pointer and remote signaling devices. They handle shocks or flow surges beyond their rated capacities.

CALIBRATION

All flow meters are individually calibrated for fluids with the viscosity you specify (up to 3000 SSU/650 centipoise). We also compensate for your fluid's specific gravity. For NIST Traceability please consult factory.

CONSTRUCTION MATERIALS

The meter body, internal moving parts, and seals are offered in a variety of materials to suit a wide range of applications, such as: water, synthetic and petroleum based oils, paint, some corrosives, solvents, and air and gases. Meter bodies are available in aluminum, anodized aluminum, brass, cast-iron or nickel-plated cast-iron, naval bronze, carbon steel or nickel-plated carbon steel, and 316 stainless steel. Aluminum, brass, and naval bronze are also available with optional nylon orifice bowl. We offer internal moving parts in the following materials: 300 series stainless, 316 stainless steel, titanium, monel, and tantalum. Choices of materials for seals are: Buna N, EPR, Viton, Kalrez™, and Teflon™ (Kalrez™ can be combined with the others). Please consult the factory for compatibility of materials with your application.

LINE CONNECTION

Ports can be threaded or flanged. Threaded ports can be NPT (1/2 to 2") or SAE straight thread (1/2 to 1-1/2"). Metric threads such as BSPP, BSPT or JIS are also available. ANSI Flanges (1/2 to 2") are standard with DIN flanges also available.

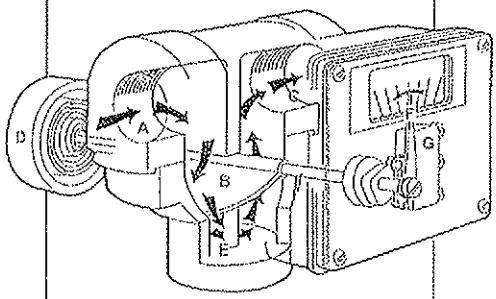

Fluid enters at A, passes around the semi-circular vane B, exits at outlet C. The vane resists the flow because of the spring D. The further the vane is pushed the larger the passageway E becomes. This minimizes the pressure drop. The vane shaft turns to operate the pointer F and remote signal devices such as the switch G.

Maintenance note: particulate can be cleared from the internals by removal of bowl-shaped part of housing, or by manipulating the vane using our manual override, special option E.

HOW TO ORDER Select appropriate symbols and build a model code number, as in example shown:

EXAMPLE: MN - A S B 30 GM V - 8 -

SERIES

Medium vane style
Normal pressure (300 PSI) = MN
Medium pressure (500 PSI) = MM
High pressure (1500 PSI) = MH

HOUSING MATERIAL (Series MN & MM)

Aluminum = D
Aluminum, nylon bowl = A*
Aluminum (hard coated) = E
Brass = F
Brass, nylon bowl = B*
Cast iron = C
Cast iron, nickel plated = N
Carbon steel = M
Carbon steel, nickel plated = J
Naval bronze = U
Naval bronze, nylon bowl = W*
Stainless steel (316) = I

*Available only on Series MN

HOUSING MATERIAL (Series MH)

Cast iron = C
Cast iron, nickel plated = N
Carbon steel = M
Stainless steel (316) = I

INTERNAL MOVING PARTS

Stainless steel (300 series) = S*
Stainless steel (316) = I*
Titanium (N/A in MH) = T
Monel (N/A in MH) = L
Tantalum (N/A in MH) = R

*MH available only in 300 and 316

SEAL MATERIAL

Buna N = B
EPR = E
Viton = F
Kalrez = J
Kalrez (dynamic) and Teflon (static) (all metal units only) = T
Kalrez (dynamic) & Buna N (static) = A
Kalrez (dynamic) and EPR (static) = H
Kalrez (dynamic) and Viton (static) = K

THREADED ATTACHMENT

Pipe Size In Inches	NPT	SAE	BSPP	BSPT
1/2	4	8T	8BP	8BT
3/4	6	12T	12BP	12BT
1	8	16T	16BP	16BT
1¼	10	20T	20BP	20BT
1½	12	24T	24BP	24BT
2	16			

FLANGED Ex: 4 FW CS 150 RF

Pipe Size	Attachment	Material	Pressure Rating	Style
4= 1/2 inch	FW= Welded	CS= Carbon Steel	150= 150PSI	RF= Ansi raised face
6= 3/4 inch	FT= Threaded	S= 316 Stainless	300= 300 PSI	D= Din raised face
8= 1 inch			600= 600 PSI	
10= 1¼ inch				
12= 1½ inch				
16= 2 inch				

VALVE (FLOW CONTROL) Series MN only

No Symbol = No Value
V = Valve (brass) Restricted to port sizes to 1-inch and flows to 30 GPM (50 GPM in 1-1/2-inch port housings)
Not available on carbon steel or stainless steel housings

SCALE CALIBRATIONS

GH = Calibrated in gallons per hour
GM = Calibrated in gallons per minute
LH = Calibrated in liters per hour
LM = Calibrated in liters per minute
CMH = Cubic meters per hour
GLM = Dual scales (GPM and LPM) (consult factory)
DGM = Dual viscosity on GPM scale (consult factory)
DLM = Dual viscosity on LPM scale (consult factory)
For specific calibrated increments and other scales consult factory.

MAX FLOW RATING LIQUIDS

These may be expressed in various engineering units as shown. Here we are selecting the maximum flow that the meter will see. The minimum reading is about 1/10th of the maximum. There are generally 5 to 7 major increments displayed on the analog scales (traditional mechanical pointer and inscribed scale) with that numbered roughly doubled for the high resolution "R" box which allows more accurate reading. Ultimate resolution is provided by the LCD digital displays standard with some transmitter selections. The following are the most commonly selected options for maximum flow rates for each engineering unit. More are available if you consult with the factory.

GPM	10, 15, 20, 30, 40, 50, 60, 70, 80, 90, 100, 110, 120, 130, 140, 150, 160
LPM	40, 50, 60, 70, 80, 90, 100, 150, 200, 250, 300, 350, 400, 500, 600
CMH	2.25, 2.5, 3, 4, 5, 6, 7, 8, 9, 10, 15, 20, 25, 30

Consult factory for compatibility of construction materials with the fluid involved.

320V.9 - A1 X R - ST - 10D

SWITCH SETTING

No symbol = Lowest possible
Or, give setting(s) in GPM or LPM. Also a symbol to indicate that accuracy is desired during increasing flow (U) or decreasing flow (D). (10D) would mean that switch should actuate when flow rate decreases to 10 GPM.)
Settings are field adjustable.

FLOW DIRECTION

R	=	Left to right
L	=	Right to left
U	=	Up
D	=	Down

SERVICE

N	=	Oil and dust tight (Type 12)
W	=	Weatherproof (Type 4)
X	=	Weatherproof, corrosion proof (Type 4X)

SPECIAL OPTIONS

Standard

HT	=	High-temp- 400°F for A & R Box, 300°F for transmitter options all boxes (RT, T & G)
ST	=	Stainless steel ID tag for customer supplied information
PC	=	Pin connector (See explanation for special options.)
FL	=	Fault light (See explanation for special options.)
C	=	CSA enclosure / PVC window
TG	=	Tempered glass window
E	=	Manual override
DS	=	Dual spring
Z86	=	Clearance vane for ≥ 16 GPM

STANDARD CONTROL BOX & READOUT (switches)

A Box

Simple indication with or without switches

AØ	=	Scale & pointer only
A1	=	One SPDT (3wire) , CE
A1B	=	One high vibration SPDT (3 wire), CE
A2	=	Two SPDT (3 wire), CE
A2B	=	Two SPDT (3wire) , CE
A3	=	One SPDT (4 wire)
A4	=	Two SPDT (4 wire)
A61	=	One SPDT (3 wire) high temperature
A62	=	Two SPDT (3 wire) high temperature
A71	=	One SPDT (3wire) gold contact
A72	=	Two SPDT (3wire) gold contact
A53	=	One SPDT (3 wire) hermetically sealed
A54	=	Two SPDT (3 wire) hermetically sealed
A11	=	Pneumatic

X Box

Hazardous location indication and switches

X7	=	One SPDT hazardous location
X7C	=	One SPDT, CE
X17	=	One DPDT hazardous location
X17C	=	One DPDT, CE
XØØ	=	One SPST hazardous location proximity
X31	=	Two SPST hazardous location proximity

G Box

Transmitter with digital display and 2 open collectors (standard), or remote display (optional)

GTLØ	=	internal 4-20 mA transmitter with two open collector alarms
GTLZØ	=	intrinsically safe 4-20 mA transmitter (no alarms)
GPØ	=	G Box with remote transmitter. This requires a remote display and transmitter to be ordered as a separate line item. Model UT-PM-DTLCD.

Note: G Box requires "W" service selection (weatherproof). G Box has a terminal strip but can be used with pin connectors ordered as Special Options as described on next page. Select PC5M for GTL and PC3M for GTLZ or GP.

SPECIAL CONTROL BOX OFFERINGS

R Box

High resolution pointer and scale for more accurate reading, optional switches

RØ	=	Scale & pointer only
R1	=	One SPDT (3wire) , CE
R2	=	Two SPDT (3 wire), CE
R3	=	One SPDT (4 wire)
R4	=	Two SPDT (4 wire)
R53	=	One SPDT (3 wire) hermetically sealed
R54	=	Two SPDT (3 wire) hermetically sealed
R61	=	One SPDT (3 wire) high temperature
R62	=	Two SPDT (3 wire) high temperature
R71	=	One SPDT (3wire) gold contact
R72	=	Two SPDT (3wire) gold contact

RT Box

High resolution pointer and scale for more accurate reading, 4-20 mA Transmitter, optional high amp mechanical switch

RTØ	=	Scale & pointer only
RT1	=	One SPDT (3wire) , CE
RT3	=	One SPDT (4 wire)
RT53	=	One SPDT (3 wire) hermetically sealed
RT61	=	One SPDT (3 wire) high temperature
RT71	=	One SPDT (3wire) gold contact

TT Box

4-20 mA Transmitter with pointer & scale, optional high amp mechanical switch, separate junction boxes for switch & transmitter

TTØ	=	Scale & pointer only
TT1	=	One SPDT (3wire) , CE
TT3	=	One SPDT (4 wire)
TT53	=	One SPDT (3 wire) hermetically sealed
TT61	=	One SPDT (3 wire) high temperature
TT71	=	One SPDT (3wire) gold contact

TTL Box

4-20 mA Transmitter with digital display, optional high amp mechanical switch, separate junction boxes for switch & transmitter

TTLØ	=	Scale & pointer only
TTL1	=	One SPDT (3wire) , CE
TTL3	=	One SPDT (4 wire)
TTL53	=	One SPDT (3 wire) hermetically sealed
TTL61	=	One SPDT (3 wire) high temperature
TTL71	=	One SPDT (3wire) gold contact

FLUID CHARACTERISTICS

Viscosity number followed by a 'V' (for SSU), 'C' (for centipoise), or 'CS' (for centistokes) followed by the specific gravity. (32V1.0) would mean water.) For dual viscosity give two numbers separated by a slash (example: 320/500V1.0)

ENGINEERING DATA

Maximum fluid temperature: 200°F (95°C)

Optional max. fluid temperature: 300 & 400°F (150 & 205°C) (option HT)

Maximum ambient temperature: 150°F (65°C)

Readout accuracy, full scale: ±2%

Series MN max. operating pressures: (3:1 safety factor): 300 PSI (20.69 BAR)

Series MM max. operating pressures: (3:1 safety factor): 500 PSI (34.48 BAR)

Series MH max. operating pressures: (3:1 safety factor): 2,000 PSI (137.93 BAR)

FLOW & PRESSURE DROP

Units with max flows to 80 GPM (300 LPM) impose a pressure drop that increases with flow from 1.9 to 3.8 PSI. Higher flow-rated models are made possible by having either a partial bypass (which raises minimum indicated flow), dual springs (which raises the pressure drop), or both. The table shows minimum flow rates and pressure drops (PSI) (at max flow rates) for models rated from 100 to 160 GPM.

MAX FLOW RATE GPM/LPM	BYPASS ONLY Minimum Flow GPM/LPM	BYPASS ONLY Max Pressure Drop PSI	DUAL SPRING* Minimum Flow GPM/LPM	DUAL SPRING* Max Pressure Drop PSI
90/340	20/75	4.5	10/40	6.0
100/380	30/100	4.5	10/50	8.0
110/400	30/100	5.0	20/90	6.8
120/450	40/150	5.8	20/90	6.8
130/500	40/150	5.8	20/90	6.8
140/550	50/170	6.5	20/90	6.8
150/570	50/170	6.5	30/100	6.8
160/600	50/170	6.5	30/100	7.5

*When dual-spring is ordered you must specify special option DS. Some dual-spring units also have partial bypass to achieve high flow ranges.

SPECIAL OPTIONS

High temperature: (option HT) requires all-metal construction of housing/orifice cover with seals of Viton, EPR, Kalrez or Teflon (compatible with fluid). A thermal barrier (heat-resistant cloth) is added between the housing and the control box, which must be used with service option "W" (weatherproof) or "X" (corrosion resistant). A metal scale is provided.

Identification tag: (option ST) customer-supplied information is stamped on a stainless steel tag that is attached to the nameplate.

Multi-pin connector: Pin connectors (option PC) are available for rapid field installation. Meters are provided with the male half of either a micro or a mini pin connector. Check the chart below for the number of pins required for your control box selection and current type. Insert the number of pins in the code PC__ for a mini connector or PC__M for a micro connector. For example, a PC5 would be a 5 pin mini and PC5M would be a 5 pin Micro.

Fault light: (option FL) a red LED in the nameplate to indicate when a flow limit has been reached by internal switch contact. Helpful with multiple meters. Add to end of symbol: 1 (1 light), 2 (2 lights), A (AC), D (DC), i.e. FL2D. Only available with service option "W" weatherproof enclosures or "X" corrosive service. For optional LED colors, consult factory.

Tempered-glass window: (option TG) replaces the standard window. A tempered-glass window is employed where airborne solvents or high-ambient temperatures are common.

Manual override: (option E) provides an extended shaft you can manipulate to clear debris, simulate flow, adjust switch settings, etc. Same material as internals specified.

CE marked switches: (option CE) SPDT 3-wire switch for general purpose use. Standard on switches 1, 1B, 2 and 2B.

Clearance vane: (option Z86) the swing vane is modified to pro-vide extra clearance for liquids that contain particulate. Available for maximum flow range of 16 GPM or greater, this reduces the turndown to a minimum of 4 GPM.

Number of pins required for various combinations of current type, box type and switch option.

	AC switch options			1, 1B, 61, 71		3		53
	DC switch options	0	1, 1B, 61, 71	3	2, 2B, 54, 62, 72		53	
Box	A		3	4	6	5	3	4
	M		3	4		5		
	R		3	4	6	5	3	4
	RT	3						
	TT	3	3	4			3	4
	TTL	3	3	4			3	4
	GTL*	5						
	GTLZ*	3						
	GP*	3						

*This box allows micro pin connectors only. Eg. PC3M or PC5M.

STANDARD OFFERING: Control Box "A"

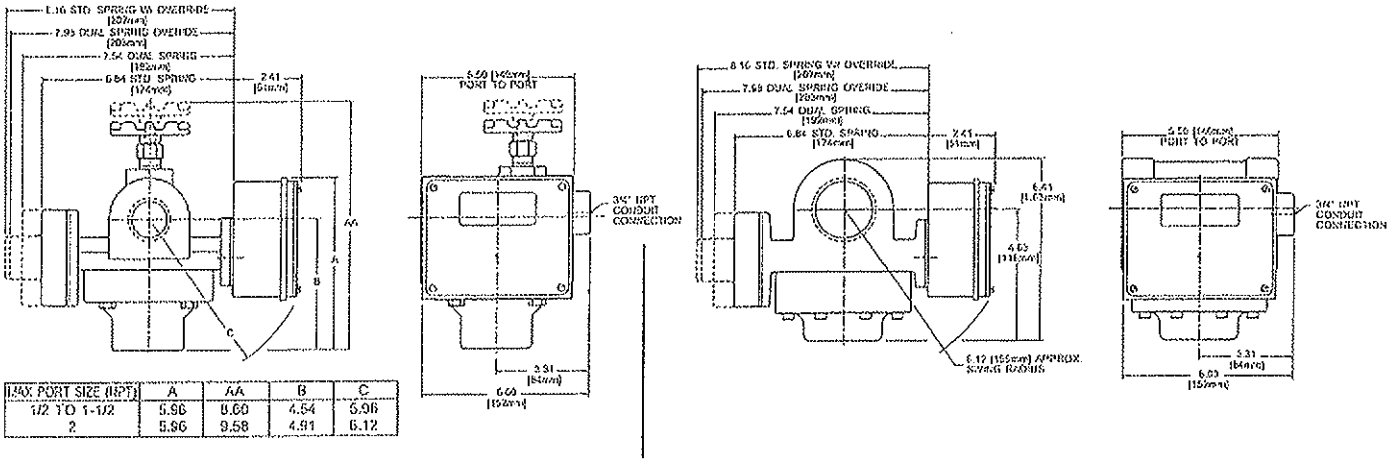

MAX PORT SIZE (NPT)	A	AA	B	C
1/2 TO 1-1/2	5.96	8.60	4.64	5.96
2	5.96	9.58	4.91	6.12

STANDARD OFFERING: Control Box "X"

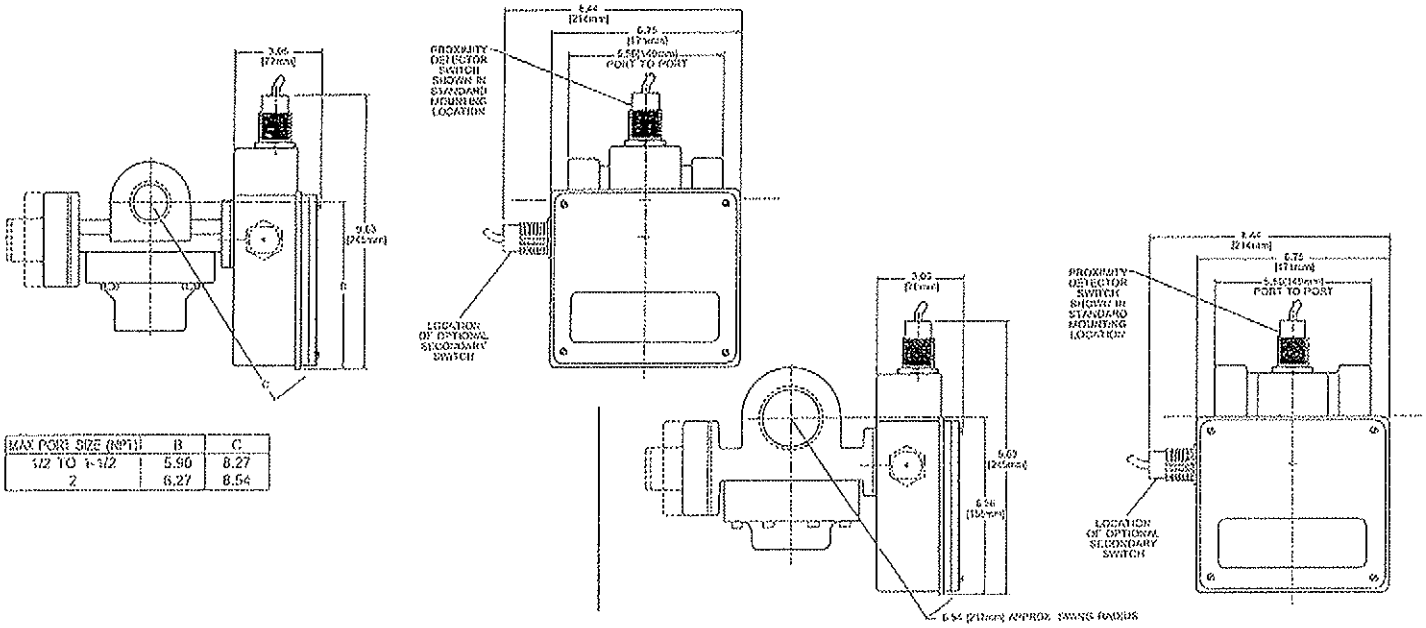

MAX PORT SIZE (NPT)	B	C
1/2 TO 1-1/2	5.96	8.27
2	6.27	8.54

STANDARD OFFERING: Control Box "G"

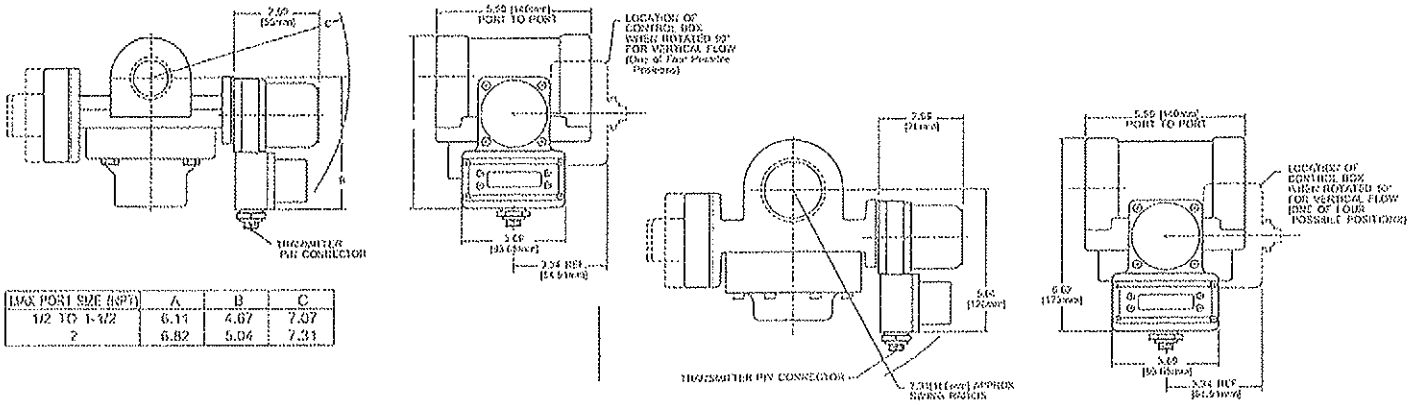

MAX PORT SIZE (NPT)	A	B	C
1/2 TO 1-1/2	6.11	4.67	7.07
2	6.82	5.04	7.31

SPECIAL OFFERING: Control Box "R"

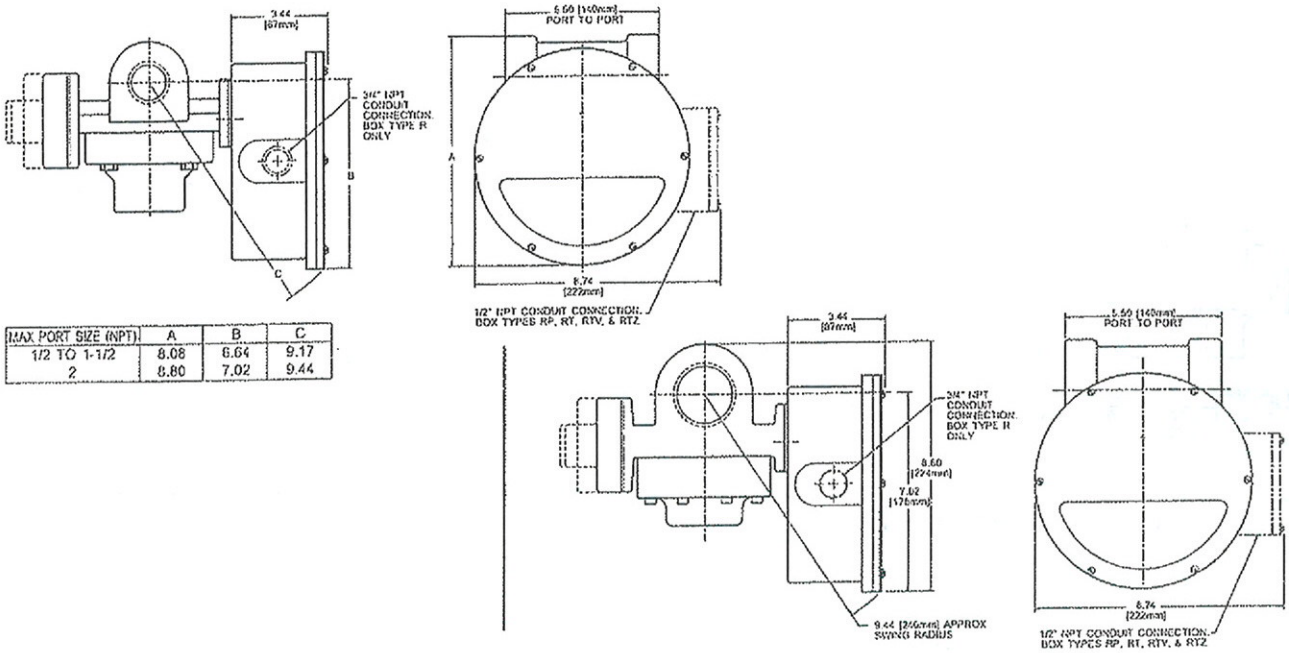

MAX PORT SIZE (NPT)	A	B	C
1/2 TO 1-1/2	8.08	6.64	9.17
2	8.80	7.02	9.44

SPECIAL OFFERING: Control Box "T"

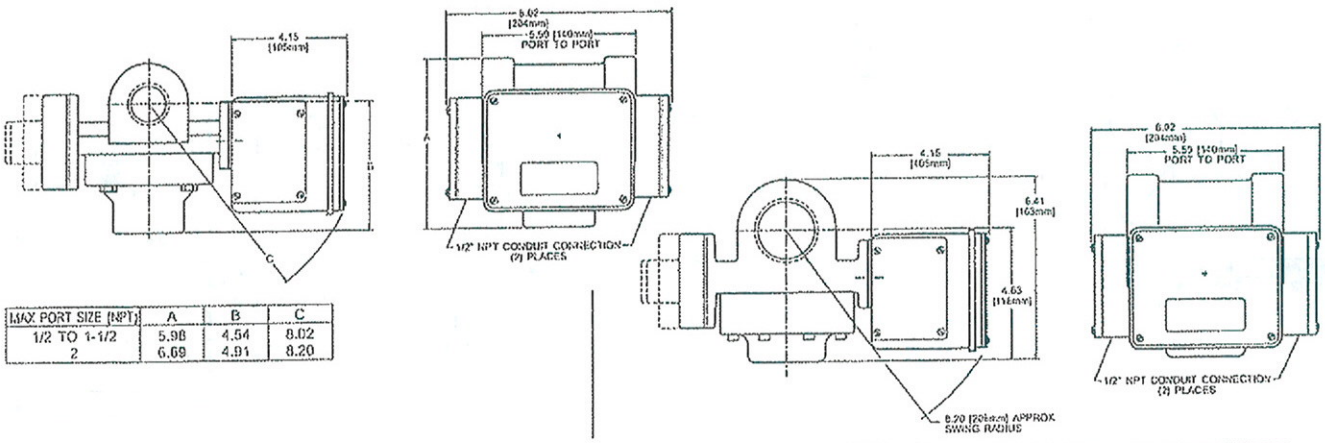

MAX PORT SIZE (NPT)	A	B	C
1/2 TO 1-1/2	5.98	4.54	8.02
2	6.69	4.91	8.20

With 150 lb R.F. flanges
(for other flanges consult factory)

Port Size (inches)	A
1/2	3-1/2
3/4	3-7/8
1	4-1/4
1-1/2	5
2	6

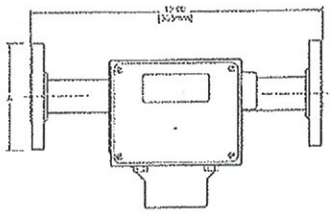

"Flow up" or "flow down" dimensions are the same. Scale numbers are turned 90° to be right reading.

Universal Flow Monitors, Inc.
1755 E. Nine Mile Road • P.O. Box 249
Hazel Park, MI 48030
Tel: 248-542-9635 • Fax: 248-398-4274
www.flowmeters.com
E-mail: ufm@flowmeters.com

T-masss 65I Insertion Version

	005		010	020	030	040	050	060	070	080	090	100	110	120
T-masss 65I		-												

005 Insertion tube length
- 20 9" (235 mm) for 3" to 20" (DN 80 to 500) pipe
- 30 13" (335 mm) for 3" to 40" (DN80 to 1000) pipe
- 40 17" (435 mm) for 3" to 60" (DN80 to 1500) pipe
- 50 24" (608 mm) for 3" to 36" (DN80 to 900) pipe

010 Insertion tube material / sensor material
- A 316L SS / 316L SS
- B 316L SS / Alloy C22

020 Process connection
- A 1" MNPT ANSI thread, compression fitting, 316L SS
- B G1A ISO 228 thread, compression fitting, 316L SS

030 Bonded seal
- 0 Not required, MNPT (only for process connection A)
- 1 Nitrile, -31 to +266°F (-35 to +130°C), only for process connection B
- 3 Kalrez, -4 to +266°F (-20 to +130°C), only for process connection B
- 4 EPDM, -40 to +266°F (-40 to +130°C), only for process connection B

040 Surface finish
- A Basic version
- B Cleaned/degreased for Oxygen service

050 Calibration
- D Factory calibration
- E Factory calibration, traceable ISO/IEC17025

060 Additional test, certificate
- 1 Without additional test
- 2 Material certificate (insertion tube + compression fitting + sensor)
- 5 CRN approval
- 7 CRN approval + material certificate (insertion tube + compression fitting + sensor)

070 Approval
- A Non-hazardous
- N FM XP Cl. I, Div. 1 / CSA Cl. I, Div. 1, Grps A-D + Zone 1 (not for housing C)
- R FM NI Cl. I, Div. 2 / CSA Cl. I, Div. 2, Grps A-D + Zone 2 (not for housing C, not for output/input R, S, T, U)

080 Housing
- A Compact aluminum, NEMA 4X
- C Wall mount aluminum, NEMA 4X
- G Field housing aluminum, NEMA 4X (not for approvals A, R)

090 Cable entry
- B 1/2" NPT
- X Not used, sensor only (only for housing A)

100 Display, operation
- 7 85 to 260 VAC, without display, remote configuration (not for housing C)
- 8 20 to 55 VAC / 16 to 62 VDC without display, remote configuration (not for housing C)
- A 85 to 260 VAC, 2-line display plus push buttons
- B 20 to 55 VAC / 16 to 62 VDC, 2-line display plus push buttons
- X Sensor only

110 Software
- B Factory setup, air
- C 1 channel, standard gas / mixture
- D 2 channel, standard gas / mixture
- E 1 channel, special gas / mixture
- F 2 channel, special gas / mixture
- X Sensor only

120 Output, input

Fixed I/O modules
- A 4 to 20 mA HART + frequency
- B 4 to 20 mA HART + frequency + two relays
- J Profibus-DP
- Q MODBUS RS 485
- R 4 to 20 mA HART + 0/4 to 20 mA, passive, Ex-i (not for approval A, R)
- S 4 to 20 mA HART active + frequency passive, Ex-i (not for approval A, R)
- T 4 to 20 mA HART + frequency passive, Ex-i (not for approval A, R)
- U 4 to 20 mA HART + 0/4 to 20 mA, passive, Ex-i (not for approval A, R)

Flexible I/O modules
- 2 4 to 20 mA HART + frequency + relay + 20 mA input
- 5 4 to 20 mA HART + frequency + 20 mA input + status input
- 6 4 to 20 mA HART + status input + 20 mA input (1 x out, 1 x in)
- 8 4 to 20 mA HART + 20 mA input + frequency + status input
- X Sensor only

Level | Pressure | Flow | Temperature | Liquid Analysis | Registration | Systems Components | Services | Solutions

Technical Information

Proline t-mass 65F, 65I

Thermal mass flow measuring system
Direct mass flow measurement of gases

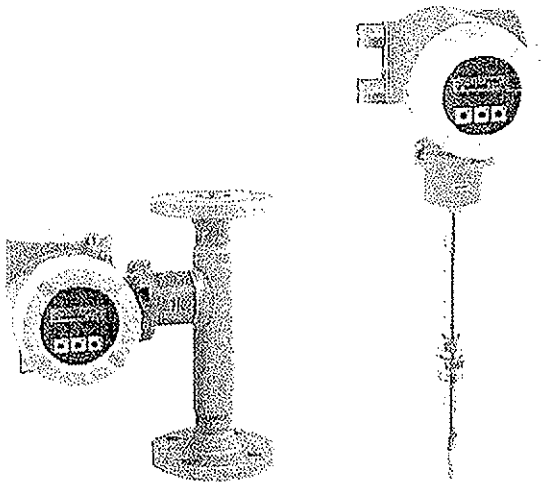

Application
For measuring the mass flowrate of a wide range of gas types e.g.

- Compressed air
- Natural gas flow to boilers / dryers
- Carbon Dioxide flow in breweries
- Biogas and aeration air in waste water plants
- Gas production (e. g. Ar, N_2, CO_2, He, O_2)
- Leakage detection

Approvals for hazardous area:
- ATEX, FM, CSA

Connection to all common process control systems:
- HART®, Profibus® DP, MODBUS® RS485

Your benefits
Direct measurement of gas mass flow. Provides temperature as an output.

The **Proline transmitter concept** comprises:
- Modular device and operating concept resulting in a higher degree of efficiency
- Quick setup operating menus for ease of commissioning
- On board software freely allows the selection of up to 20 pure gases and creation of mixed gases with a maximum of 8 components (e. g. Biogas)

The **t-mass sensors** offer:
- Negligible pressure drop or loss
- Wide turndown of up to 100:1
- Insertion version can be programmed for circular pipe or rectangular ducting installation
- Each device individually calibrated and delivered with a traceable certificate
- Can be calibrated with flow conditioner on request.
- Optional cold tap device for insertion allowing ease of removal/replacement for low pressure and non-toxic gas applications.

Endress+Hauser
People for Process Automation

Table of contents

Function and system design 3
Measuring principle 3
Measuring system 3

Input 4
Measured variable 4
Measuring range (air at ambient conditions) 4
Input signal 6

Output 6
Output signal 6
Signal on alarm 7
Load 7
Low flow cut off 7
Galvanic isolation 7
Switching output 7

Power supply 8
Electrical connection measuring unit 8
Terminal assignment 9
Electrical connection remote version 9
Supply voltage 10
Cable entries 10
Remote version cable specifications 10
Power consumption 10
Power supply failure 10
Potential equalisation 10

Performance characteristics 10
Reference calibration conditions 10
Maximum measured error 10
Repeatability 10
Response time 10

Operating conditons: Installation 11
Installation instructions 11
Inlet and outlet runs 12
Insertion version 16
Length of connecting cable 18

Operating conditions: Environment 18
Ambient temperature range 18
Storage temperature 18
Degree of protection 18
Shock resistance 18
Vibration resistance 18
Electromagnetic compatibility (EMC) 18

Operating conditions: Process 19
Medium temperature range 19
Pressure loss 19
Medium pressure range (nominal pressure) 19
Medium pressure 19

Mechanical construction 20
Design / dimensions 20
Weight (SI units) 32
Materials 32
Process connections 33

Human interface 34
Display elements 34
Operating elements 34
Remote operation 34

Certificates and approvals 34
CE mark 34
C-tick mark 34
Ex approval 34
PROFIBUS DP certification 34
MODBUS certification 34
Other standards and guidelines 35
Pressure Equipment Directive 35

Accessories 36
Device-specific accessories 36
Measuring principle-specific accessories 36
Communication-specific accessories 36
Service-specific accessories 36

Documentation 37

Registered trademarks 37

Ordering information 38

Function and system design

Measuring principle

Thermal dispersion principle

The thermal principle operates by monitoring the cooling effect of a gas stream as it passes over a heated transducer (PT100).
Gas flowing through the sensing section passes over two PT 100 RTD transducers one of which is used conventionally as a temperature sensing device, whilst the other is used as a heater. The temperature sensor monitors the actual process values whilst the heater is maintained at a constant differential temperature above this by varying the power consumed by the sensor. The greater the mass flow, the greater the cooling effect and power required to maintain the differential temperature. The measured heater power is therefore a measure of the gas mass flowrate.

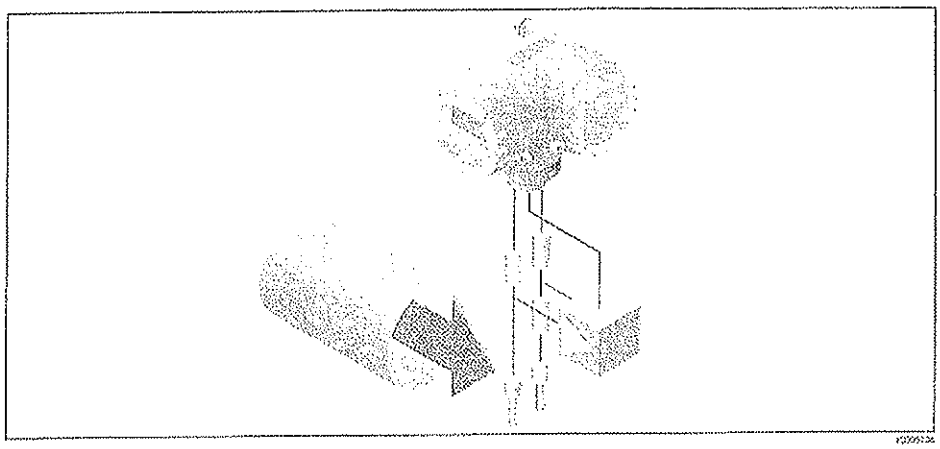

Measuring system

The measuring system consists of a transmitter and a sensor. Two versions are available:
- Compact version: transmitter and sensor form a single mechanical unit.
- Remote version: transmitter and sensor are mounted physically separate from one another.

Transmitter	
t-mass 65 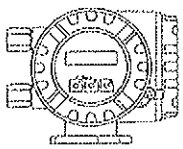	▪ Two-line liquid-crystal display ▪ Configuration using push button operation
Sensor	
F 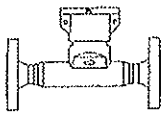	▪ Flanged version ▪ Nominal diameters DN 15 to 100 (1/2" to 4") ▪ Sensor body material: - 1.4404, 316L SS - CF3M ▪ Transducer body material: - 1.4404, 316L SS, Alloy C22
I	▪ Insertion version ▪ Sensor length 235/335/435/608 for DN 80 to 1500 (9.25"/13.2"/17.1"/23.9" for line size 3" to 60") ▪ Sensor body material: -1.4404, 316/316L SS ▪ Transducer body material: - 1.4404/316L SS, Alloy C22

Input

Measured variable

Mass flow
Gas temperature

Measuring range (air at ambient conditions)

The measuring range is dependant on the gas selection, line size and use of flow conditioner. Each meter is individually calibrated on air and mathematically converted to suit the customer specific gas, where required. The table below defines the ranges available for air without flowconditioner. Please refer to your Endress+Hauser representative or to Applicator, the selection tool, for other gases and process conditions.

Measuring range for the flanged version, metric units:

DN	kg/h		Nm^3/h at 0°C, 1.013 bar a		scf/min. at 15°C, 1.013 bar a	
	min.	max.	min.	max.	min.	max.
15	0.5	53	0.38	41	0.23	25
25	2	200	1.5	155	1.0	96
40	6	555	4.6	429	3.0	266
50	10	910	7.7	704	5.0	436
80	20	2030	15.5	1570	10	974
100	38	3750	29	2900	18	1800

Measuring range for the flanged version, US units:

DN	lb/h		Sm^3/h at 59 °F, 14.7 psi a		scf/min. at 59 °F, 14.7 psi a	
	minimum	maximum	minimum	maximum	minimum	maximum
1/2"	1.1	116	0.4	42	0.23	25
1"	4.4	440	1.6	160	1.0	96
1 1/2"	13.2	1220	4.8	450	3.0	266
2"	22	2002	8	740	5.0	436
3"	44	4466	16	1656	10	974
4"	84	8250	30	3060	18	1800

Measuring range for the insertion version, metric units:

DN	kg/h		Nm^3/h at 0°C, 1.013 bar a		scf/min. at 15°C, 1.013 bar a	
	min.	max.	min.	max.	min.	max.
80	20	2030	15.5	1570	9.6	974
100	38	3750	29.0	2900	18	1800
150	50	7500	38	5800	24	3600
200	80	12500	62	9666	38	6000
250	120	20000	93	15468	58	9600
300	180	28000	139	21655	86	13440
400	300	50000	232	38670	144	24000
500	500	80000	386	61870	240	38400
600	700	115000	540	88940	336	55200
700	900	159000	696	122970	432	76300
1000	2000	320000	1546	247846	960	153600
1500	2500	720000	1933	556844	1200	345600

In order to achieve optimum performance it is recommended that under operating conditions the maximum velocity is limited to a value below 70 m/sec.

Measuring range for the insertion version, US units:

DN	lb/h		Sm^3/h at 59°F, 14.7 psi a		scf/min. at 59°F, 14.7 psi a	
	minimum	maximum	minimum	maximum	minimum	maximum
3"	44	4466	16	1657	9	926
4"	84	8250	30	3060	17	1710
6"	110	16500	40	6120	22.8	3420
8"	176	27500	64	10200	36.5	5700
10"	264	44000	98	16300	55	9120
12"	396	61000	146	22855	82	12768
16"	660	110000	245	40810	136	22800
20"	1100	176000	408	65300	228	36480
24"	1540	253000	570	93870	319	52440
28"	1980	349800	735	129800	410	22504
40"	4400	704000	1630	261200	912	145920
60"	5500	1584000	2040	587750	1140	328320

In order to achieve optimum performance it is recommended that under operating conditions the maximum velocity is limited to a value below 230 ft/sec.

Caution!
The flowrates shown are representative of the calibrated conditions only and do not necessarily reflect what the meter can measure under operating conditions and actual internal pipe dimensions found on site. To correctly size and select a meter, it is recommended that you either contact your local Endress+Hauser representative or refer to the Endress+Hauser software package Applicator.

Examples in metric units:

Line Size	Gas	Process pressure	Temperature	Max. Flowrate
DN		bar a	°C	kg/h
50	Air	1	25	910
50	Air	3	25	3300
50	CO_2	1	25	1300
50	CO_2	3	25	3950
50	Methane	1	25	795
50	Methane	3	25	1500

Examples in US units:

Line Size	Gas	Process pressure	Temperature	Max. Flowrate
Dia		psia	°F	lb/hr
2"	Air	14.7	77	2002
2"	Air	44.1	77	7260
2"	CO_2	14.7	77	2860
2"	CO_2	44.1	77	8690
2"	Methane	14.7	77	1749
2"	Methane	44.1	77	3300

Input signal

Status input (auxiliary input) for HART version:

U = 3 to 30 V DC, R_i = 5 kΩ, galvanically isolated; switch level: ±3 to ±30 V DC
Configurable for: totalizer reset, positive zero return, zero point adjustment

Status input (auxiliary input) for MODBUS RS485 version:

U = 3 to 30 V DC, R_i = 3 kΩ, galvanically isolated; switch level: ±3 to ±30 V DC, independent of polarity
Configurable for: totalizer reset, positive zero return, zero point adjustment

Current input:

Active/passive selectable, galvanically isolated, resolution: 2 µA
- Active: 4 to 20 mA, $R_l \leq 150\ \Omega$, U_{out} = 24 V DC, short-circuit proof
- Passive: 0/4 to 20 mA, $R_l \leq 150\ \Omega$, U_{max} = 30 V DC

Output

Output signal

Current output:

Active/passive selectable, galvanically isolated, time constant selectable (0.0 to 100.0 s), full scale value selectable, temperature coefficient: typically 0.005% o.r./°C, resolution: 0.5 µA
- Active: 0/4 to 20 mA, $R_L < 700\ \Omega$ (at HART: $R_L \geq 250\ \Omega$)
- Passive: 4 to 20 mA; supply voltage V_S 18 to 30 V DC; $R_l \geq 700\ \Omega$

Note!
If the current output is used as a temperature output, please observe the following information:
Class B according to EN 6075

Pulse/frequency output:

Active: 24 V DC , 25 mA (max. 250 mA during 20 msec), $R_L > 100\ \Omega$
Passive: open collector, 30 V DC, 250 mA, galvanically isolated.
- Frequency output: full scale frequency 2 to 1000 Hz (f_{max} = 1250 Hz), on/off ratio 1:1, pulse width max. 2s, time constant selectable (0.0 to 100.0 s)
- Pulse output: pulse value and pulse polarity can be selected, pulse width adjustable (0.5 to 2000 ms).

PROFIBUS DP interface:

- PROFIBUS DP in accordance with IEC 61158, galvanically isolated
- Profile version 3.0
- Data transmission rate: 9.6 kBaud to 12 MBaud
- Automatic data transmission rate recognition
- Signal encoding: NRZ-Code
- Function blocks: 3 x Analog input, 2 x Totalizer
- Output data: Mass flow, Corrected volume flow, Temperature, Totalizer 1 to 2
- Input data: Positive zero return (ON/OFF), Zero point adjustment, Totalizer control and Pressure display value
- Bus address can be set at the measuring device via miniature switches or using local display (optional)

MODBUS RS485 interface:

- MODBUS device type: slave
- Address range: 1 to 247
- Bus address can be set at the measuring device via miniature switches or the on-site display (optional)
- Supported function codes: 03, 04, 06, 08, 16, 23
- Broadcast: supported with the function codes 06, 16, 23
- Physical interface: RS485 in accordance with EIA/TIA-485 standard
- Supported baudrate: 1200, 2400, 4800, 9600, 19200, 38400, 57600, 115200 Baud
- Transmission mode: RTU or ASCII
- Response times:
  Direct data access = typically 25 to 50 ms
  Auto-scan buffer (data block) = typically 3 to 5 ms

Signal on alarm	**Current output:** Failsafe mode selectable (e.g. in accordance with NAMUR Recommendation NE 43) **Current input:** Failsafe value selectable **Pulse/frequency output:** Failsafe mode selectable **Status output:** "Non conductive" in the event of fault or power supply failure. **Relay output:** "De-energized" in the event of fault or power supply failure. **PROFIBUS DP:** Status and alarm messages in accordance with PROFIBUS Profile Version 3.0. **MODBUS RS485:** If an error occurs, the value NaN (not a number) is output for the measured values.
Load	see "Output signal"
Low flow cut off	Switch points for low flow cut off are programmable
Galvanic isolation	All circuits for inputs, outputs, and power supply are galvanically isolated from each other.
Switching output	**Relay output:** Normally closed (NC) or normally open (NO) contacts available (factory setting: relay 1 = NO, relay 2 = NC), max. 30 V / 0.5 A AC; 60 V / 0.1 A DC, galvanically isolated. Configurable for: error messages, limit values

Power supply

Electrical connection measuring unit

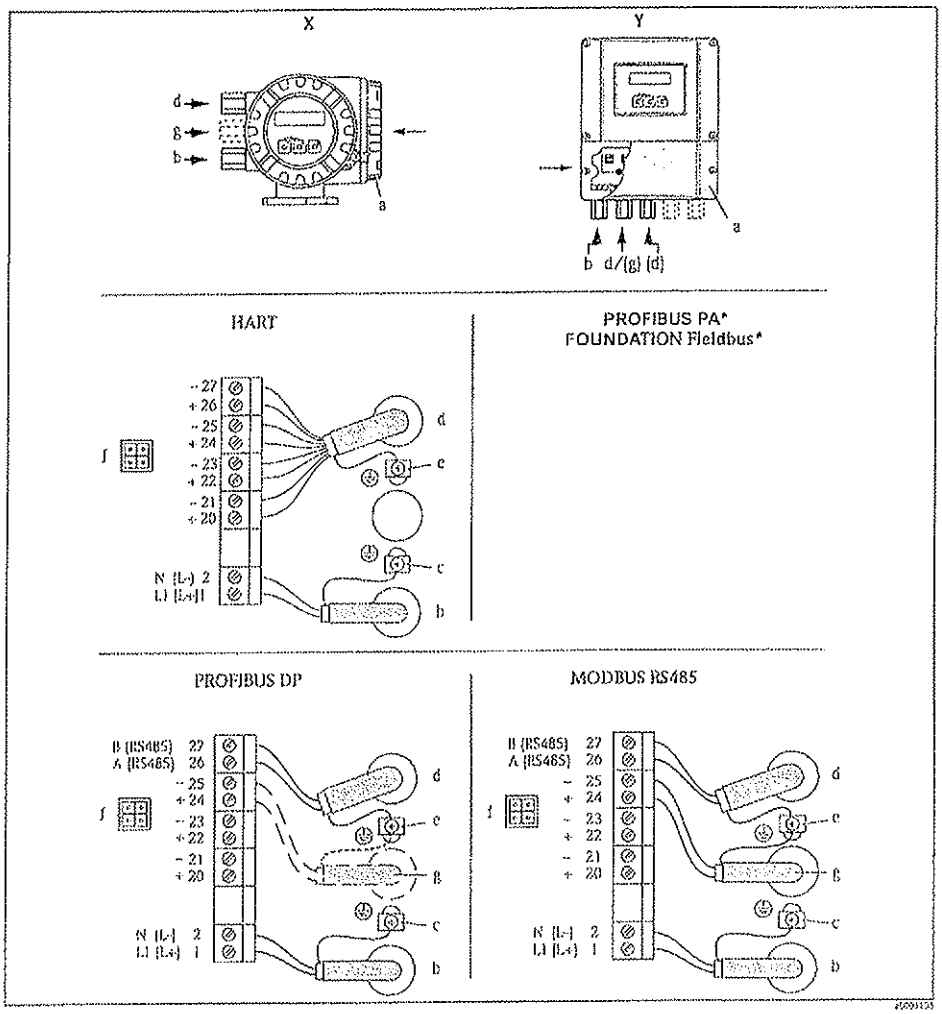

Connecting the transmitter, cable cross-section: max. 2.5 mm² (AWG 13)

A View X (field housing)
B View Y (wall-mount housing)

*) Not available yet (left in deliberately)
a Cover of the connection compartment
b Cable for power supply: 85 to 260 V AC, 20 to 55 V AC, 16 to 62 V DC
Terminal No. 1: L1 for AC, L+ for DC
Terminal No. 2: N for AC, L- for DC
c Ground terminal for protective conductor
d Signal cable: See Terminal assignment → Page 7
Fieldbus cable:
Terminal Nr. 26: PROFIBUS DP / MODBUS RS485 → A (RxD/TxD-P)
Terminal Nr. 27: PROFIBUS DP / MODBUS RS485 → B (RxD/TxD-N)
e Ground terminal for signal-cable shield / RS485 line
Observe that the stripped and twisted lengths of cable shield to the ground terminal are as short as possible (max. 5 mm)
f Service connector for connecting service interface FXA193 (Fieldcheck, Tof Tool - Fieldtool)
g Signal cable: See Terminal assignment → Page 7
PROFIBUS cable for external termination, optional:
Terminal No. 24: +5 V
Terminal No. 25: DGND
MODBUS RS485 cable for status input:
Terminal No. 24: 3 to 30 V DC, R_i = 3 kΩ
Terminal No. 25: GND

Terminal assignment

Order variant	Terminal No. (inputs/outputs) 20 (+) / 21 (–)	22 (+) / 23 (–)	24 (+) / 25 (–)	26 (+) / 27 (–)
Fixed communication boards (permanent assignment)				
65***_*********A	-	-	Frequency output	Current output HART
65***_*********B	Relay output	Relay output	Frequency output	Current output HART
65***_*********J	-	-	+5V (ext. termination)	PROFIBUS DP
65***_*********Q	-	-	Status input	MODBUS RS485
65***_*********R	-	-	Current output 2 Ex i, active	Current output 1 Ex i active, HART
65***_*********S	-	-	Frequency output Ex i, passive	Current output Ex i Active, HART
65***_*********T	-	-	Frequency output Ex i, passive	Current output Ex i Passive, HART
65***_*********U	-	-	Current output 2 Ex i, passive	Current output 1 Ex i passive, HART
Flexible communication boards				
65***_*********5	Status input	Current input	Frequency output	Current output HART
65***_*********6	Status input	Current input	Current output 2	Current output HART
65***_*********8	Status input	Frequency output	Current output 2	Current output HART

Electrical connection remote version

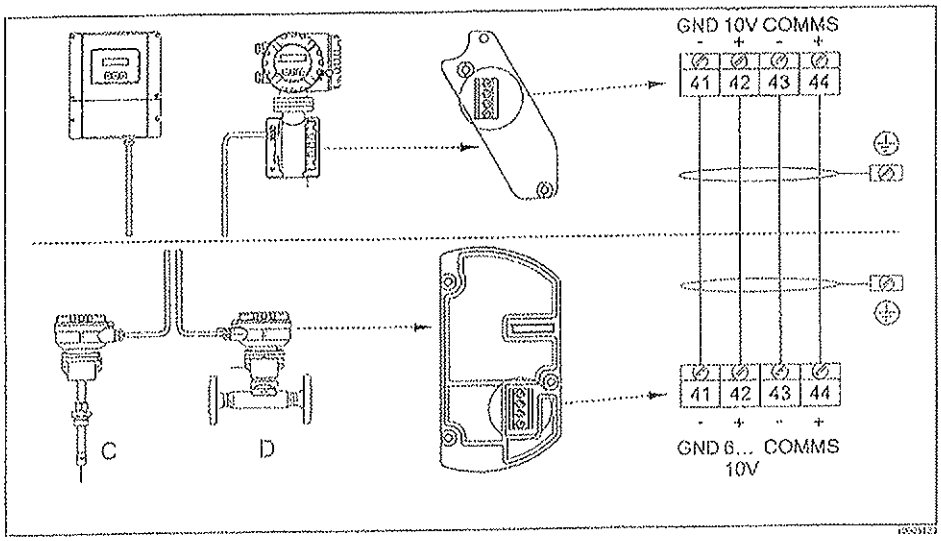

A Wallmount housing; Non-hazardous area and zone 2 (ATEX II3G)
B Wallmount housing; Zone 1 (ATEX II2G)
C Remote sensor insertion version
D Remote sensor flanged version

Wire colors (when supplied by Endress+Hauser):
Terminal no. 41 = white; 42 = brown; 43 = green; 44 = yellow
(Color code according to DIN 47100)

Warning!
Do not provide separate power to remote sensor. The power must be provided by the transmitter.

Supply voltage	85 to 260 V AC, 45 to 65 Hz 20 to 55 V AC, 45 to 65 Hz 16 to 62 V DC
Cable entries	Power-supply and signal cables (inputs/outputs): ▪ Cable entry M20 x 1.5, 8 to 12 mm (0.3 to 0.47") ▪ Thread for cable entries, G 1/2", 1/2" NPT Connecting cable for remote version: ▪ Cable entry M20 x 1.5, 8 to 12 mm (0.3 to 0.47") ▪ Thread for cable entries, G 1/2", 1/2" NPT
Remote version cable specifications	▪ 2 x 2 x 0.5 mm² (AWG 20) PVC cable with common shield (2 twisted pairs) ▪ Conductor resistance: ≤ 40 Ω/km (≤ 131.2 Ω /1000 ft) ▪ Capacitance, core/shield: ≤ 0.001 µF/m (≤ 3.280 nF/ft) ▪ Inductance: ≤ 0.9 µH/m (≤ 2.952 µH/ft) ▪ Operating voltage: ≥ 250 V ▪ Temperature range: -40 to +105°C (-40 to +221°F) ▪ Overall nominal diameter: 8.5 mm (0.335") ▪ Maximum cable length: 100 m (328 feet) Operation in zones of severe electrical interference: The measuring device complies with the general safety requirements in accordance with EN 61010, the EMC requirements of IEC/EN 61326, and NAMUR recommendation NE 21/43. Note! For cable specifications for hazardous area devices please see the additional Ex documentation.
Power consumption	AC: 85 to 260 V = 18.2 W ; 20 to 55 V = 14 W ; (including sensor) DC: 8 W (including sensor)
Power supply failure	Lasting minimum 1 power cycle ▪ EEPROM/HistoROM T-DAT saves measuring system data if the power supply fails ▪ HistoROM S-DAT is an exchangeable data storage chip with sensor specific data (pipe type, nominal diameter, serial number, flow conditioner, zero point, etc.) ▪ Totalizer stops at the last value determined
Potential equalisation	No measures necessary For devices in hazardous areas please refer to the additional Ex documentation

Performance characteristics

Reference calibration conditions	▪ Accredited according to ISO/IEC 17025 ▪ Tracable to National Standards ▪ Temperature controlled to within ±0.5°C (± 0.9°F) at atmospheric pressure and humidity controlled
Maximum measured error	Flanged version: ±1.5 % of reading for 100 % to 20 % of full scale at reference conditions ±0.3 % of full scale for 20 % to 1 % of full scale at reference conditions Insertion version: ±1.5 % of reading plus ±0.5 % of full scale Note! ▪ Calibration gas is normally air at reference calibration conditions and with a fully developed flow profile. ▪ On site performance is dependant on the standard of installation.
Repeatability	0.5 % for velocities above 0.2 m/s (0.65 ft/s)
Response time	Typically less than 2 seconds for 63 % of a given step change (in either direction).

Operating conditons: Installation

Thermal meters require a fully developed flow profile as a prerequisite for correct flow measurement. For this reason, please note the following points when installing the device.

Installation instructions

Orientation

The device can generally be installed in any position in the piping. In the case of wet/dirty gases, upward flow is prefered in vertical pipes to minimise condensation/contamination on or around the sensing element. In particular, where free condensation can occur (e.g. Biogas) the sensor should be orientated to prevent water collecting on or around the sensing elements (e.g. do not install the sensor at a low point in the installation without adequate drainage).
Make sure that the direction arrow on the sensor matches the direction of flow (direction of fluid flow through the pipe).

	Flanged version			Insertion version	
Vertical orientation					
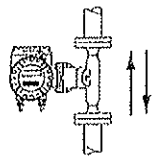	compact	remote	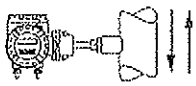	compact	remote
	YY	YY		Y (see note below)	YY
Horizontal orientation:					
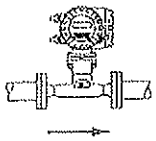	compact	remote		compact	remote
	YY	YY		YY	YY
Horizontal orientation:					
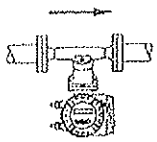	compact	remote	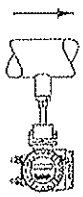	compact	remote
	X	X		X	X

YY = Recommended orientation
Y = Orientation recommended in certain situations; not recommended in high vibration or unstable installations
X = Not recommended

Caution!
When mounting an insertion meter in a vertical line it is recommended that a remote version is used or support is provided for the compact version.

Thermal insulation

When the gas is very humid or saturated with water (eg. Biogas) the pipeline and flowmeter body should be insulated to prevent water droplets condensing on the pipe wall and/or flow transducer. In extreme cases of moisture and temperature variation, it may be advisable to provide trace heating of the pipework and/or sensor body.

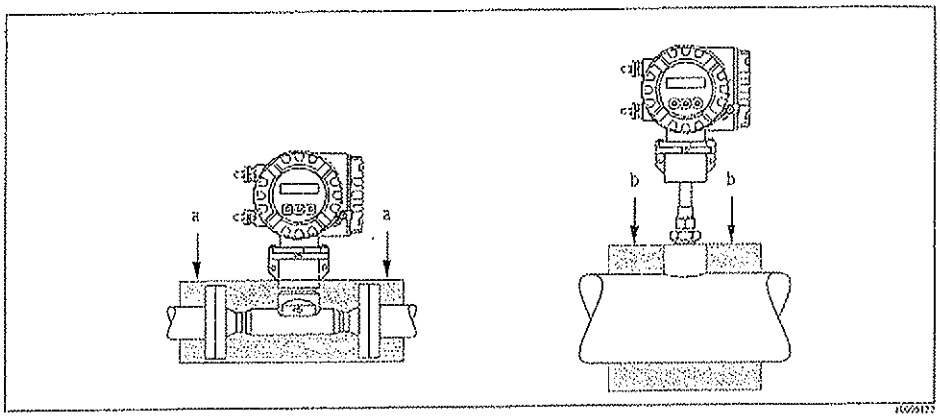

a = Maximum insulation height for the flanged version

b = Maximum insulation height for the insertion version

Inlet and outlet runs

The sensitivity of the thermal dispersion principle to low flow rates means the flowmeter can also be sensitive to internal disturbances in the flowing gas stream (e.g. swirl) especially in the larger pipe diameters (≥ DN 150 (≥ 6")).
As a general rule, the installed thermal flow sensor should always be installed as far away as possible from any flow disturbances. See ISO14511 for further information.

Process components or pipework configuration

When disturbances (e. g. pipe elbows, reducers, valves, T-pieces etc.) are located upstream of the thermal meter, precautions must be taken to minimise any effects on the measuring performance.
The figure on the following page illustrates the minimum recommended inlet and outlet runs expressed in multiples of the pipe diameter, longer lengths should always be used if they are available in the metering run.
Regardless of any other consideration, the minimum recommendations for inlet and outlet runs on either side of the sensor are:

Inlet runs:

Minimum 15 x Dia for the flanged version (65F)
Minimum 20 x Dia for the insertion version (65I)

Outlet runs:

Minimum 2 x Dia for the flanged version (65F)
Minimum 5 x Dia for the insertion version (65I)

Note!
- These are minimum values, increasing these dimensions will often improve the flowmeter perfomance.
- Where two or more disturbances are located upstream of the meter, the longest recommended upstream pipe run is to be observed as an absolute minimum.
- It is always recomended to install control valves downstream of the flowmeter.
- For very light gases such as Helium and Hydrogen all upstream distances should be doubled.

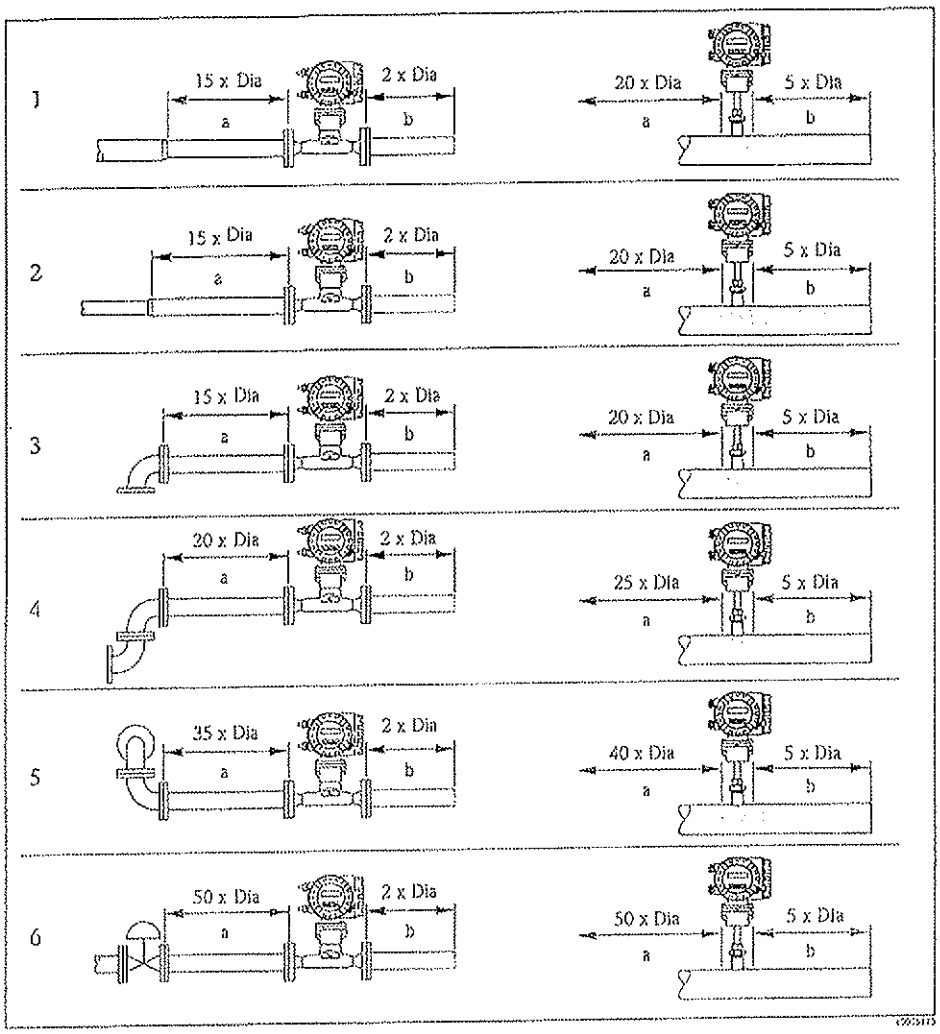

The figure above illustrates the minimum recommended inlet and outlet runs expressed in multiples of the pipe diameter.

1 = Reduction
2 = Extension
3 = 90° elbow or T-piece
4 = 2 x 90° elbow
5 = 2 x 90° elbow, 3-dimensional
6 = Control valve (where possible a modulating control valve should be mounted downstream of a flowmeter)

a = Inlet run
b = Outlet run

Caution!
Wherever possible mount any control and butterfly shut off valves downstream of flowmeter.

Outlet runs with pressure measuring points

The pressure measuring point should be installed downstream of the measuring device, so that there is no potential influence of the pressure transmitter process connection on the flow entering the measuring point.

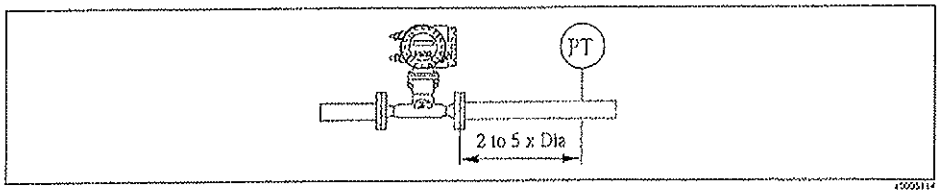

Installing a pressure measuring point (PT = pressure transmitter)

Perforated plate flow conditioner

It is recommended to install a perforated plate flow conditioner if the recommended inlet runs are not available.

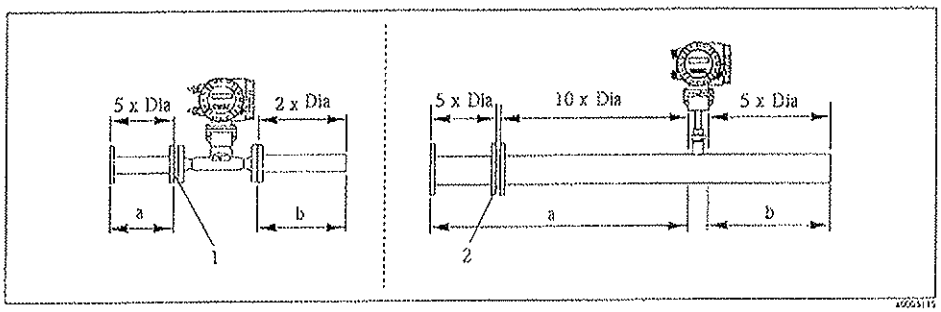

1 = Flow conditioner with flanged version / 2 = Flow conditioner with insertion version

a = Inlet run / b = Outlet run

Flow conditioner for use with insertion sensors

For the majority of gas types, the flow conditioner must be installed at a distance of 10 x Dia upstream of the sensor. A further 5 pipe diameters inlet run is required upstream of the actual conditioner itself.

Note!
Due to the range of pipe diameters it is not possible to calibrate insertion meters with a flow conditioner if ordered together. The conditioners used are based on the Mitsubishi design which are available from line sizes 80 mm (3") to 300 mm (12").

Flow conditoner for use with flanged sensors

This is a special Endress+Hauser version designed specially for use with the t-mass F sensor (Sizes DN 25 to 100 / 1" to 4"). The flow conditioner should be fitted immediately upstream of the flanged sensor. A further 5 pipe diameters inlet run is required upstream of the actual conditioner itself.

For optimum performance, it is advised that the t-mass F sensor and flow conditioner are ordered at the same time such that they are calibrated together. To retrospectively fit a flow conditioner will have a small effect on the measurement performance.

Note!
The use of other types of flow conditioners, other than the Endress+Hauser flow conditioner, with the t-mass F sensor will have an impact on the measurement performance due to the effects of flow profile and pressure drop.

The flow conditioner is fitted between two piping flanges and centered with mounting bolts.

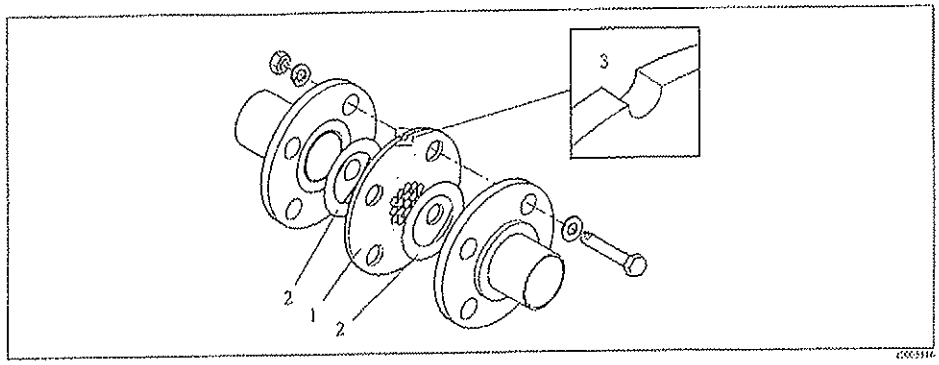

Flow conditioner mounting arrangement

1 = Perforated plate flow conditioner
2 = Seal/gasket
3 = Notch for positioning

Note!
The flow conditioner has a notch to indicate the mounting position. Mount vertically.

Pressure loss calculation

$$\Delta p = \text{constant} \cdot \frac{\dot{m}^2}{\rho} \cdot \frac{1}{D^4}$$

Pressure loss: Δp in mbar or psi
Mass flow : $\dot{m}$ in kg/h or lbm/h
Density: ρ in kg/m^3 or lbm/ft^3
Diameter: D in mm or inch
Constant = 1876 (metric) or $8.4 \cdot 10^{-7}$ (US units)

Metric units calculation:

$\dot{m}$ = 148 kg/h
ρ = 5.94 kg/m^3 (at 5 bar abs at 20 °C)
D = 28.5 mm (for a DN 25, PN 40 meter)

$$\Delta p = 1876 \cdot \frac{148^2}{5.94} \cdot \frac{1}{28.5^4} = 10.5 \text{ mbar}$$

US units calculation:

$\dot{m}$ = 326 lbm/h
ρ = 0.37 lbm/ft^3 (at 72.5 psia at 68°F)
D = 1.05 inch (for a 1" Class 150 Sched 40 meter)

$$\Delta p = 8.4 \cdot 10^{-7} \cdot \frac{326^2}{0.371} \cdot \frac{1}{1.05^4} = 0.198 \text{ psi}$$

Pipework requirements

Good installation practice should be followed at all times:

- Cleaned pipe and flange welded joints
- Correctly sized gaskets
- Correctly aligned flanges and gaskets
- The use of seamless pipe immediately upstream of the flowmeter.
- The use of pipework with a matching internal diameter to that of the flowmeter to ensure that no step disturbance greater than 1 mm (0.04 inch) can occur at the meter inlet or outlet, 3 mm (0.12 inch) for diameters > DN 200 (> 8").
- As a general comment, anything that disturbs the smoothness of the internal pipe wall (see figure below) should be eliminated; the goal should be a smooth uninterrupted internal surface.
  For further information please refer to ISO 14511.

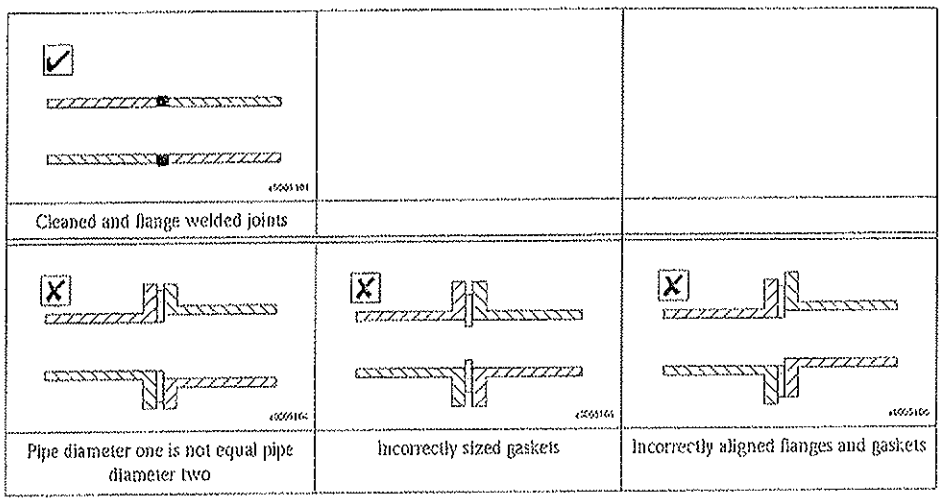

Insertion version

Insertion depth

When installing the sensor, the following three dimensions need to be taken into account to allow the correct insertion length to be specified:

- A = Internal diameter of the circular pipe or for a rectangular duct, the duct height if the sensor is to be mounted vertically or duct width if it is to be mounted horizontally
- B = Pipe wall thickness
- C = Height of the mounting boss on the pipe or duct including the sensor fitting and cold/hot tap if fitted.

The tube section is supplied with a graduated scale along its length calibrated in millimeters or inches. It is important that the sensor be installed so that the top of the adjustable fitting is aligned with the value on the scale that is equal to the following calculated value:

- For pipe diameters < DN 100 (4"):
  (0.3 x A) + B + C + 2 mm (0.079 inch)
- For pipe diameters ≥ DN 100 (4"):
  (0.2 x A) + B + C + 3 mm (0.12 inch)

When the sensor is at the correct insertion depth the sensor must next be aligned for the correct flow direction. After alignment, the sensor fitting must be tightened to secure and seal the insertion tube.

It is essential that all installation dimensions are supplied at the time of order to allow correct manufacture and calibration, especially when the mounting boss is provided by the customer. The same requirement exists for insertion sensors supplied to fit DN80 to 100 (3" to 4") pipe sizes (regardless of the type of process connection) since they require calibration with the identical mechanical setup as the final installation.

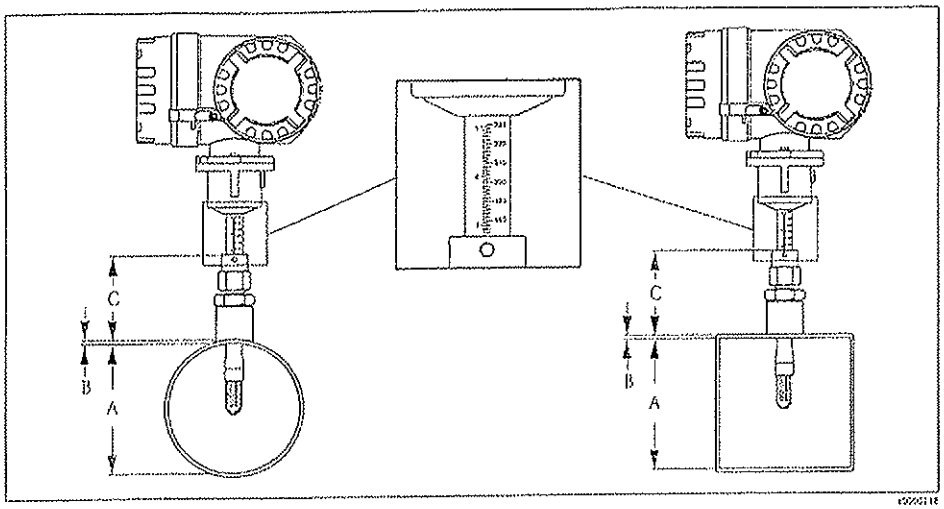

Note!

- Insertion sensors mounted in DN 80 and 100 (3" and 4") pipes are calibrated in the factory at the actual line size specified, all insertion sensors for pipe sizes ≥ DN 150 (6") are calibrated on a DN 175 (7") pipe and numerically scaled to suit the process pipe size (this pipe configuration together with the engineering units selection is programmable via the integral keyboard and display when fitted).
- Unless stated otherwise, any installation guidance assumes that a standard mounting boss provided by Endress+Hauser is being used.

Vertical alignment

It is important that the sensor mounting boss is welded to the pipe or duct such that the sensor is mounted at 90 degrees to the flow direction. Any deviation from this angle in any plane may cause flow disturbances around the measuring point that could cause errors.

Flow direction alignment

It is very important that the sensor is aligned correctly with the direction of flow. There are two guidelines for correct alignment:

- The arrows on the sides of the sensor housing assembly are pointing in the same direction as the flow.
- The graduated scale on the insertion tube section should be aligned directly upstream of the flow direction.

To ensure optimum exposure of the measuring transducers to the flowing gas stream, the sensor must not be rotated more than 7 degrees from this alignment.

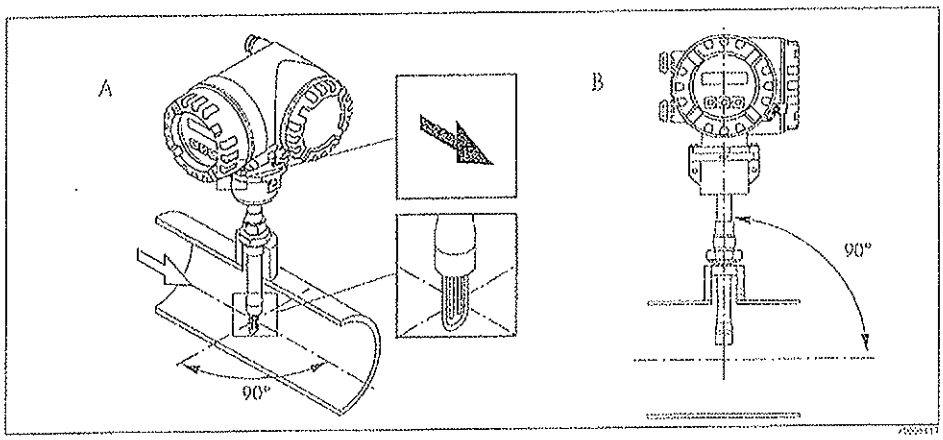

It is important to keep the 90° degree angle

A = Vertical alignment
B = Flow direction alignment

Insertion version with cold tap process connection

The device can be fitted to a "cold tap" process connection.

It allows the removal of an insertion meter from a pipe or duct when the process is stopped and no pressure and extreme temperature are present. Following removal the isolation valve permits the restarting of the process.

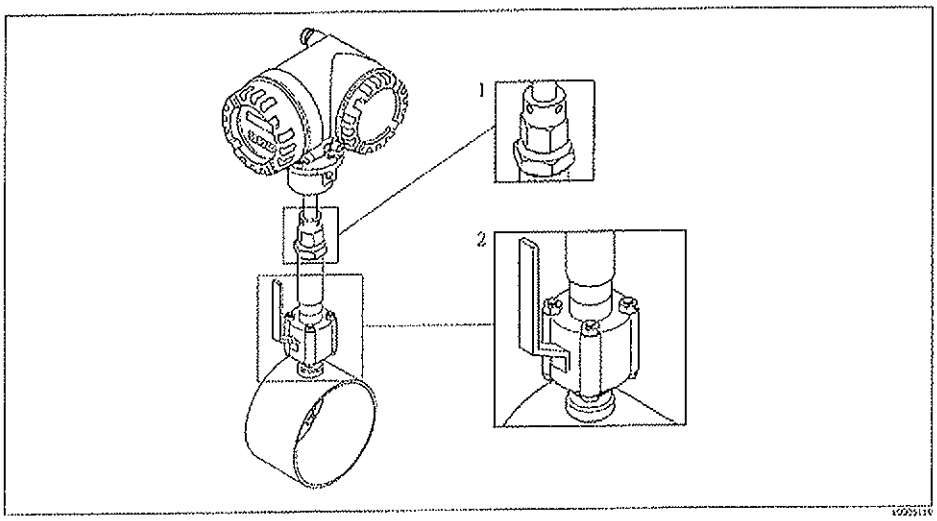

Cold tap version

1 = Compression gland
2 = Isolation valve

Length of connecting cable	Maximum 100 meters (328 ft), remote version

Operating conditions: Environment

Ambient temperature range	Standard: –20 to +60°C (–4 to 140°F); –40°C/°F available on request Note! ▪ Install the device in a shaded location. Avoid direct sunlight, particularly in warm climatic regions. (a protective hood is available on request) ▪ At ambient temperatures below –20°C (–4°F) the readability of the display may be impaired. It must be remembered that the sensor operating principle is based on a heat loss mechanism, therefore the sensor performs best when the ambient and/or gas temperatures are relatively stable.
Storage temperature	–40 to +80°C (–40 to 176°F), recomended +20°C (+68°F)
Degree of protection	Standard: IP 67 (NEMA 4X) for transmitter and sensor
Shock resistance	In accordance with IEC 60068-2-31
Vibration resistance	Acceleration up to 1 g, 10 to 150 Hz, following IEC 60068-2-6
Electromagnetic compatibility (EMC)	To IEC/EN 61326 and NAMUR recommendation NE 21

Operating conditions: Process

Medium temperature range

Sensor

t-mass F:

–40 to +100°C (–40 to 212°F)

t-mass I:

–40 to +130°C (–40 to 266°F)

Seals:

t-mass F:

Viton –20°C to +100°C (–4°F to +212°F)
Kalrez –20°C to +100°C (–4°F to +212°F)
EPDM –40°C to +100°C (–40°F to +212°F)

t-mass I:

Nitrile –35°C to +130°C (–3°F to +266°F)
Kalrez –20°C to +130°C (–4°F to +266°F)
EPDM –40°C to +130°C (–40°F to +266°F)

Pressure loss

2 mbar (0.029 psi) maximum (without flow conditioner)

Medium pressure range (nominal pressure)

t-mass F:

–0.5 to 40 bar gauge (–7.25 to 580 psig)

t-mass I:

–0.5 to 20 bar gauge (–7.25 to 290 psig)

Medium pressure

Pressure temperature curve to EN (DIN), stainless steel

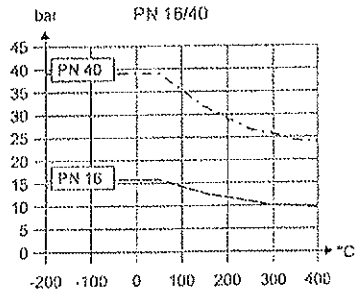

Pressure temperature curve to JIS B2238 and ANSI 16.5, stainless steel

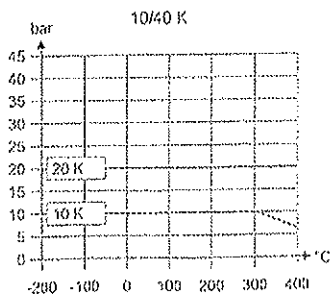

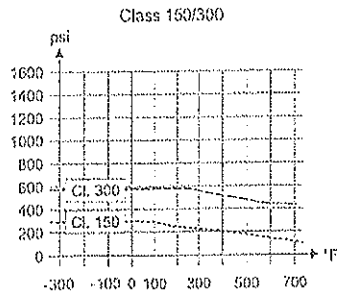

Mechanical construction

Design / dimensions

Dimensions: Wall-mount housing (non hazardous area and II3G / zone 2)

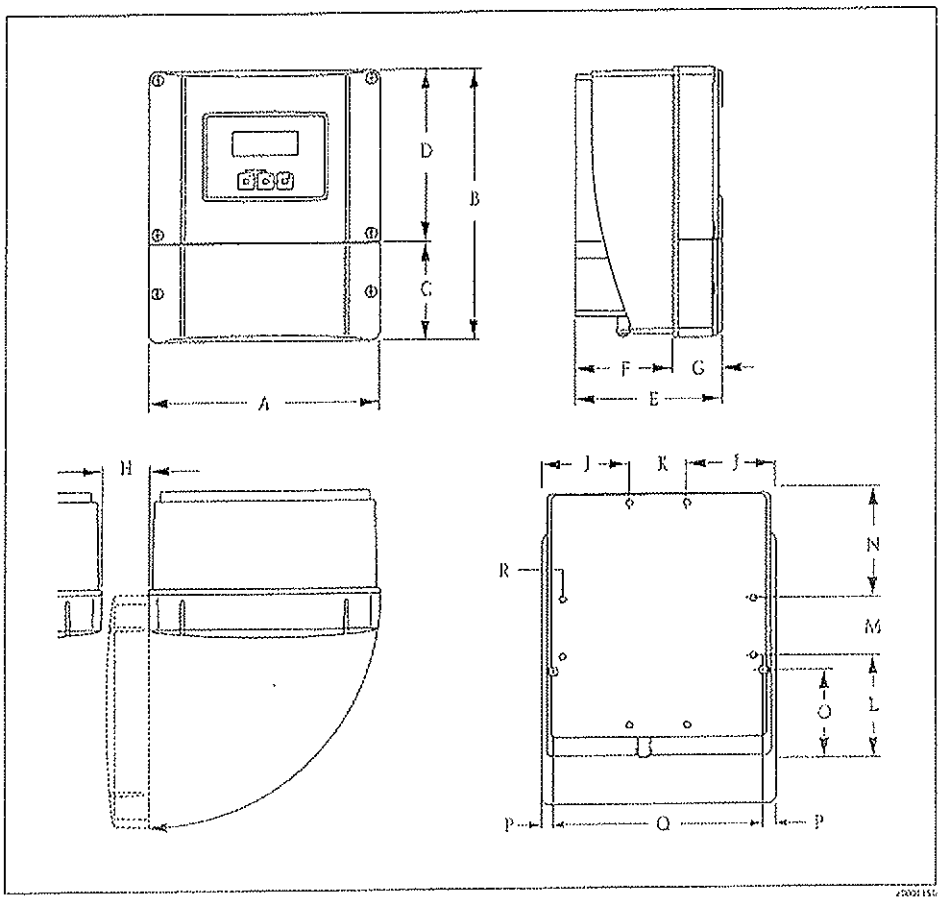

Metric units [mm]

A	B	C	D	E	F	G	H	J	K	L	M	N	O	P	Q	R
215	250	90.5	159.5	135	90	45	>50	81	53	95	53	102	81.5	11.5	192	8xM5

US units [inch]

A	B	C	D	E	F	G	H	J	K	L	M	N	O	P	Q	R
8.46	9.84	3.56	6.28	5.32	3.54	1.77	>1.97	3.19	2.09	3.74	2.09	4.02	3.21	0.45	7.56	8xM5

Installing the wall-mount transmitter housing

Caution!

- Make sure that the ambient temperature does not go beyond the permissible range – 20 to +60°C (–4 to 140°F), optional – 40 to +60°C (–40 to 140°F). Install the device in a shaded location. Avoid direct sunlight.
- Always install the wall-mount housing in such a way that the cable entries are pointing down.

Mounted directly on the wall

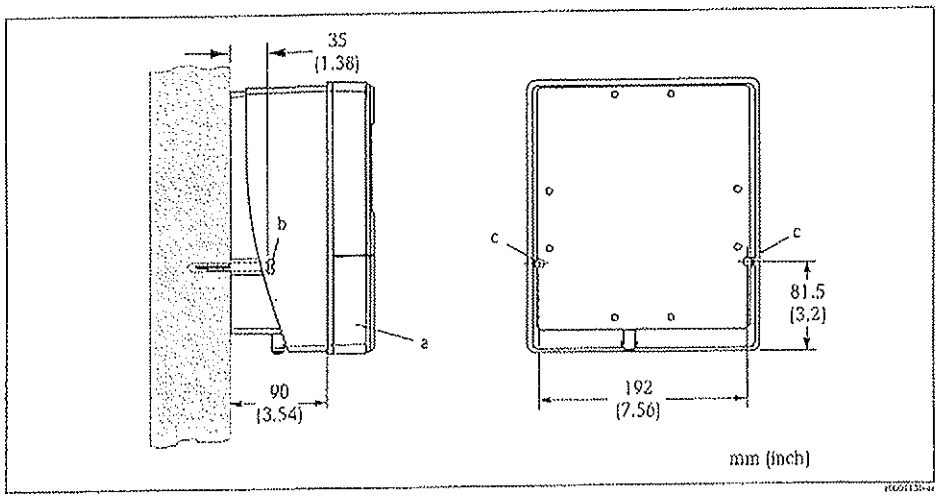

a = Wallmount housing

b = Securing screws (M6): maximum. Ø 6.5 mm (0.25 inch); Screw head: maximum Ø 10.5 mm (0.41 inch)

c = Appropriate bores in the housing

Pipe mounting and installation in control panel

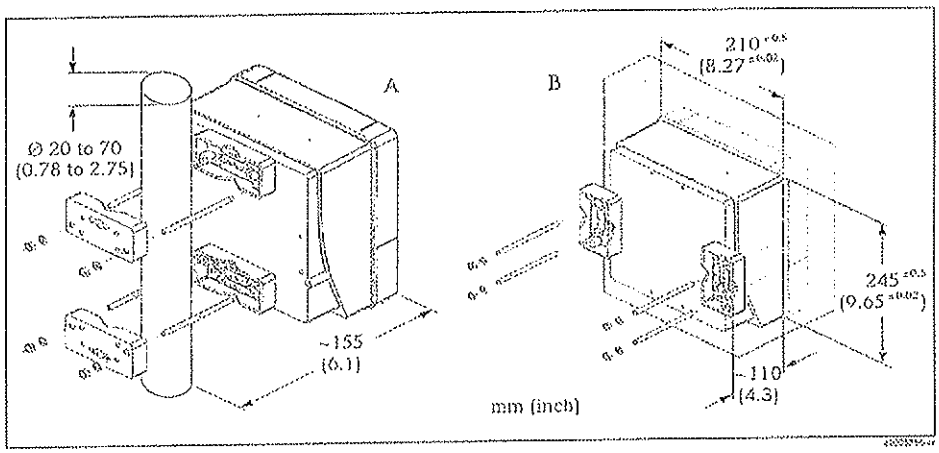

A = Pipe mounting of wallmount housing

B = Installation in control panel of wallmount housing

Caution!
If a warm pipe is used for installation, make sure that the housing temperature does not exceed the maximum permitted value of +60°C (+140°F).

Dimensions: Remote field housing (II2GD / zone 1)

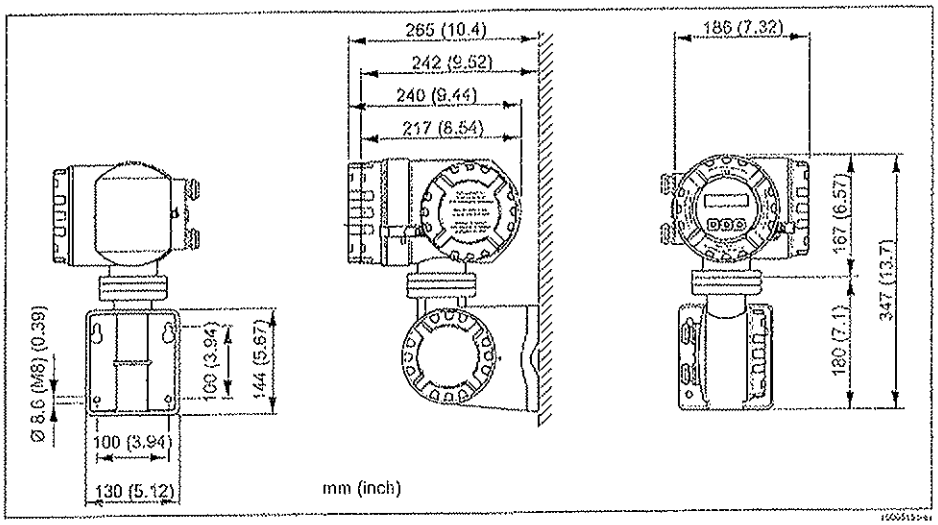

Pipe mounting of the remote field housing

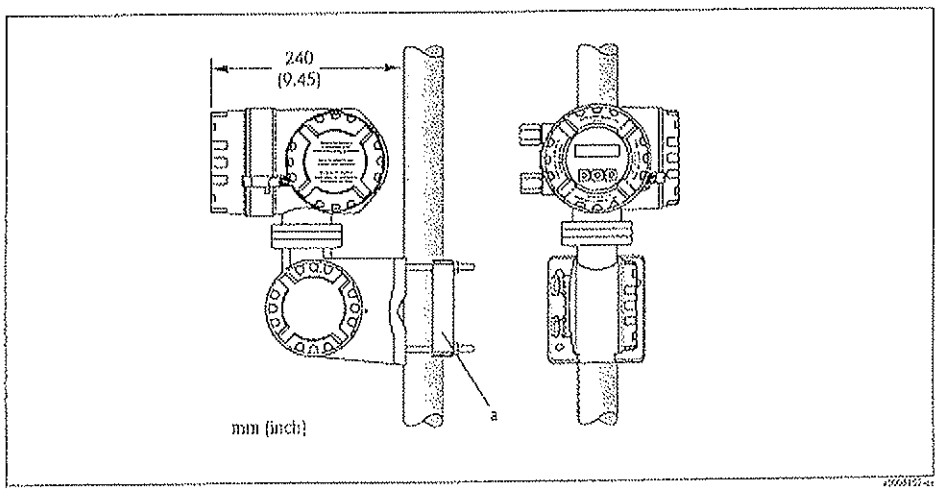

a = Pipe mounting (separate mounting set, see accessories)

Caution!
If a warm pipe is used for installation, make sure that the housing temperature does not exceed the maximum permitted value of +60°C (140°F).

Dimensions: Remote sensor housing flanged version (II2GD / zone 1)

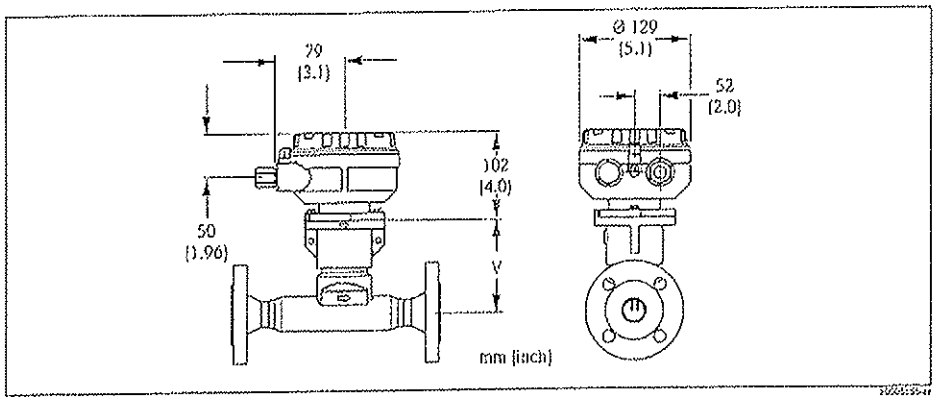

For dimension V of the flanged remote sensor version please refer for the metric units to Page 24 and for the US units to Page 28

Dimensions, t-mass 65F, metric units: Flange connections according to EN (DIN), JIS

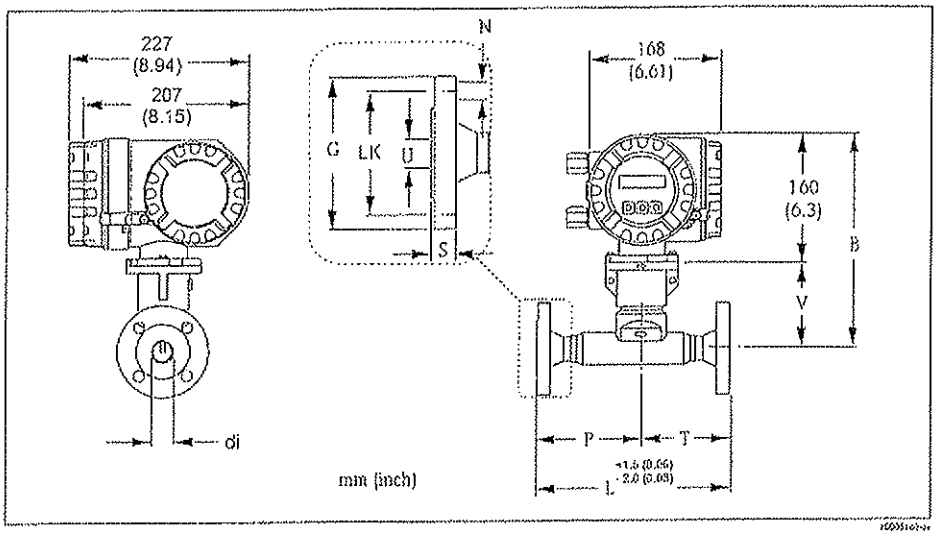

Flange EN 1092-1 (DIN 2501 / DIN 2512N [1]) / PN 16: 1.4404/316L/316											
Surface roughness (flange): EN 1092-1 Form B1 (DIN 2526 Form C), Ra 6.3 to 12.5 µm											
DN	di	B	G	L	LK	N	P	S	T	U	V
100	97	303	220	800	180	8 x Ø18	500.5	20	299.5	107.1	143

[1] Flange with groove to EN 1092-1 Form D (DIN 2512N) available

Flange EN 1092-1 (DIN 2501 / DIN 2512N [1]) / PN 40: 1.4404/316L/316											
Surface roughness (flange): EN 1092-1 Form B1 (DIN 2526 Form C), Ra 6.3 to 12.5 µm											
DN	di	B	G	L	LK	N	P	S	T	U	V
15	13.9	276.5	95	245	65	4 x Ø14	132.5	16	112.5	17.3	116.5
25	24.3	276.5	115	245	85	4 x Ø14	132.5	18	112.5	28.5	116.5
40	38.1	173.5	150	320	110	4 x Ø18	200	18	120	43.1	113.5
50	49.2	278.5	165	400	125	4 x Ø18	250	20	150	54.5	118.5
80	73.7	291	200	640	160	8 x Ø18	400	24	240	82.5	131
100	97	303	235	800	190	8 x Ø22	500.5	24	299.5	107.1	143

[1] Flange with groove to EN 1092-1 Form D (DIN 2512N) available

Flange JIS B2238/ 10K / Sched 40: 1.4404/316L/316

Surface roughness (flange): Ra 3.2 to 6.3 µm

DN	di	B	G	L	LK	N	P	S	T	U	V
50	49.2	278.5	155	400	120	4 x Ø19.1	250.0	16	150.0	52.7	118.5
80	73.7	291.0	185	640	150	4 x Ø19.1	400.0	18	240.0	78.1	131.0
100	97.0	303.0	210	800	175	4 x Ø19.1	500.5	18	299.5	102.3	143.0

Flange JIS B2238/ 10K / Sched 80: 1.4404/316L/316

Surface roughness (flange): Ra 3.2 to 6.3 µm

DN	di	B	G	L	LK	N	P	S	T	U	V
50	49.2	278.5	155	400	120	4 x Ø19.1	250.0	16	150.0	49.2	118.5
80	73.7	291.0	185	640	150	4 x Ø19.1	400.0	18	240.0	73.7	131.0
100	97.0	303.0	210	800	175	4 x Ø19.1	500.5	18	299.5	97.0	143.0

Flange JIS B2238/ 20K / Sched 40: 1.4404/316L/316

Surface roughness (flange): Ra 3.2 to 6.3 µm

DN	di	B	G	L	LK	N	P	S	T	U	V
15	13.9	276.5	95	245	70	4 x Ø15	132.5	14	112.5	16.1	116.5
25	24.3	276.5	125	245	90	4 x Ø19	132.5	16	112.5	27.2	116.5
40	38.1	273.5	140	320	105	4 x Ø19	200	18	120	41.2	113.5
50	49.2	278.5	155	400	120	8 x Ø19	250	18	150	52.7	118.5
80	73.7	291.0	200	640	160	8 x Ø23	400	22	240	78.1	131.0
100	97	303.0	225	800	185	8 x Ø23	500.5	24	299.5	102.3	143.0

Flange JIS B2238/ 20K / Sched 80: 1.4404/316L/316

Surface roughness (flange): Ra 3.2 to 6.3 µm

DN	di	B	G	L	LK	N	P	S	T	U	V
15	13.9	276.5	95	245	70	4 x Ø15	132.5	14	112.5	13.9	116.5
25	24.3	276.5	125	245	90	4 x Ø19	132.5	16	112.5	24.3	116.5
40	38.1	273.5	140	320	105	4 x Ø19	200	18	120	38.1	113.5
50	49.2	278.5	155	400	120	8 x Ø19	250	18	150	49.2	118.5
80	73.7	291.0	200	640	160	8 x Ø23	400	22	240	73.7	131.0
100	97	303.0	225	800	185	8 x Ø23	500.5	24	299.5	97	143.0

Dimensions, t-mass 65I, metric units: Compact insertion version

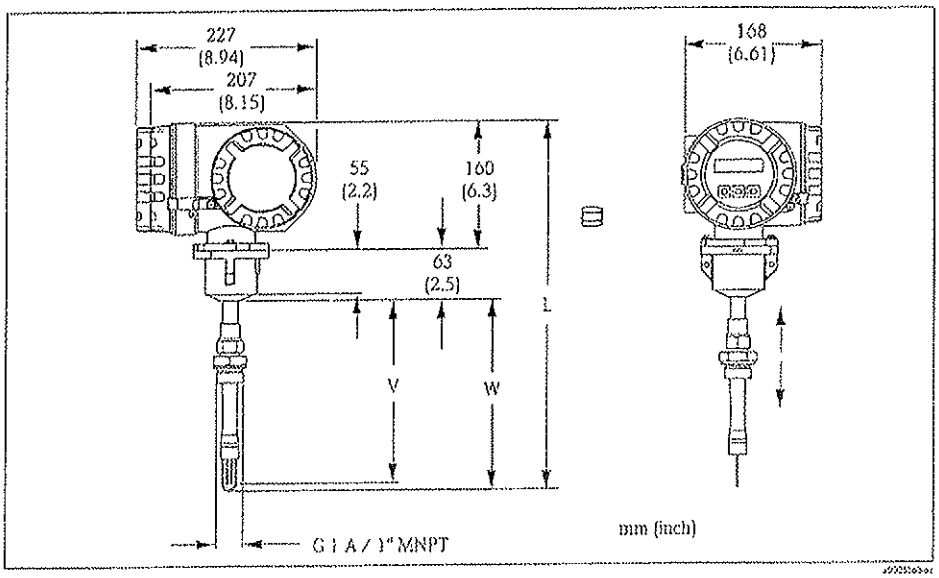

Dimensions, t-mass 65I, metric units: Remote sensor housing insertion version

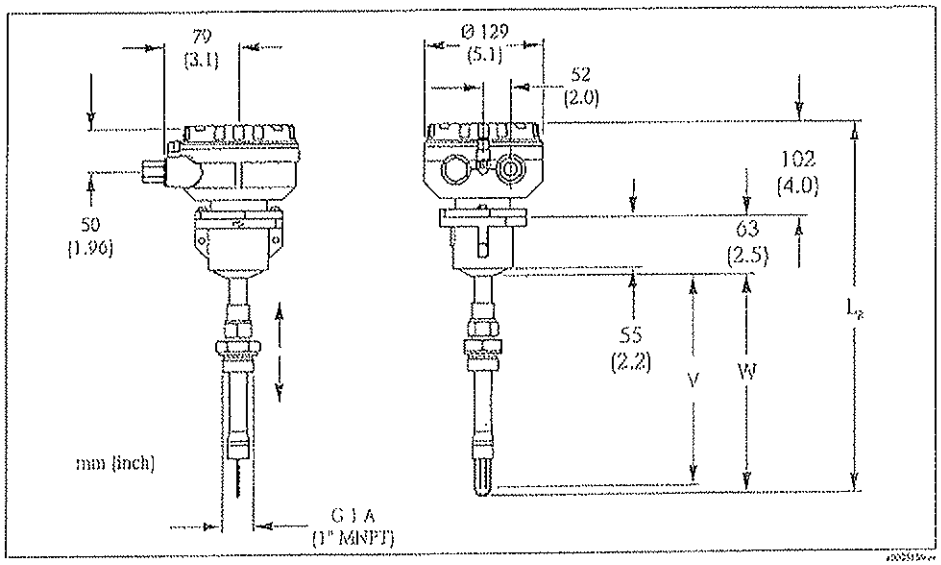

Insertion version length	V	W	L	L_R
235	235	244.5	467.5	409.5
335	335	344.5	567.5	509.5
435	435	444.5	667.5	609.5
608	608	617.5	840.5	782.5

Dimensions, flow conditioner, metric units: According to EN (DIN) / JIS

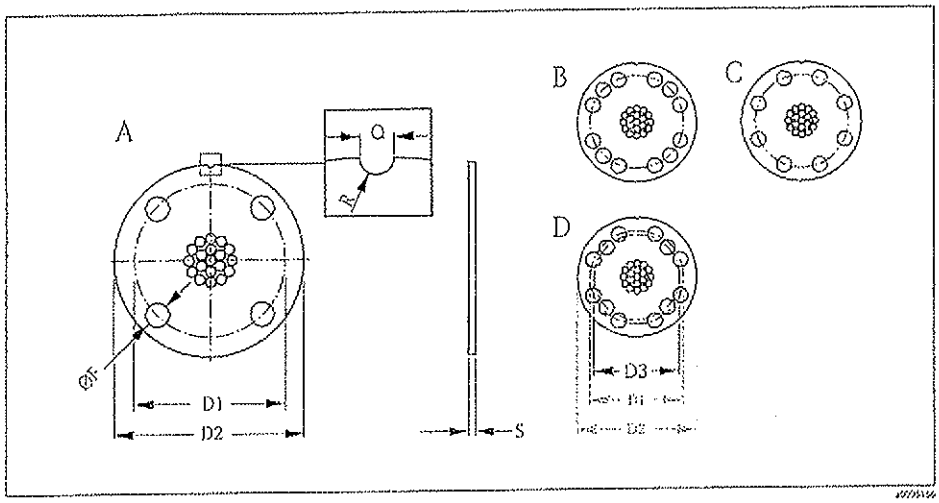

							EN (DIN)			
							PN 16		PN 40	
DN	Type	D1	D2	F	Q	R	S	Weight [kg]	S	Weight [kg]
25	A	83	105	13	5	2.5	–	–	4.5	0.3
40	A	108	135	17	5	2.5	–	–	7.0	0.7
50	A	123	150	17	5	2.5	–	–	8.5	1.0
80	C	158	185	17	5	2.5	–	–	13.0	2.3
100	C	187	220	22	5	2.5	17.0	4.1	17.0	4.1

							JIS 10K/20K			
							Sched 40		Sched 80	
DN	Type	D1	D2	F	Q	R	S	Weight [kg]	S	Weight [kg]
25	A	87	115	17	5	2.5	4.5	0.4	4.0	0.4
40	A	102	130	17	5	2.5	6.5	0.7	6.0	0.7
50	B	117	145	17	5	2.5	8.5	1.2	8.0	1.1
80	C	157	188	21	5	2.5	12.5	3.0	12.0	2.8
100	C	182	214	21	5	2.5	16.5	5.1	15.5	4.8

Dimensions, t-mass 65F, US units: Flange connections according to ANSI

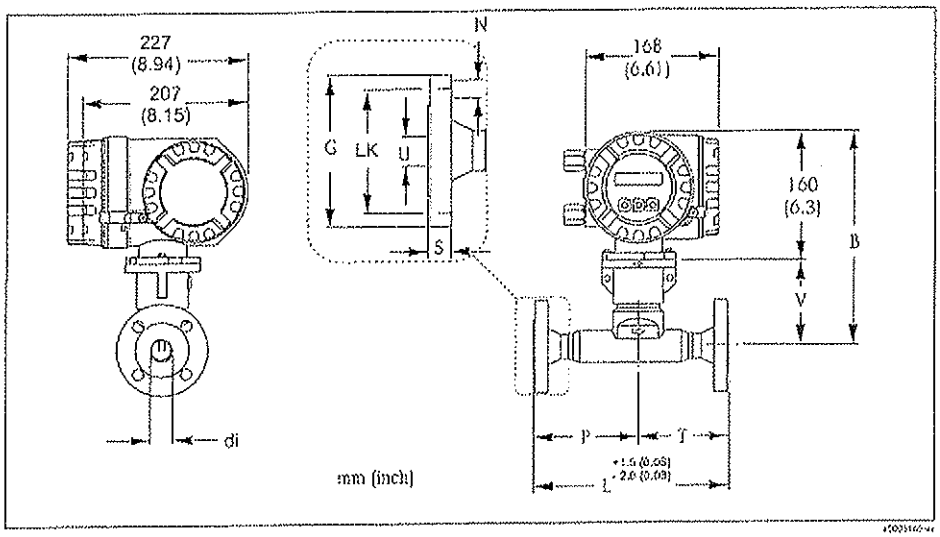

Flange ANSI B16.5 / Cl 150 / Sched 40: 1.4404/316L/316											
Surface roughness (flange): Nº / 250 µinch											
Dia	di	B	G	L	LK	N	P	S	T	U	V
1/2"	0.87	10.88	3.50	9.6	2.38	4 x Ø 5/8	5.22	0.44	4.43	0.62	4.59
1"	1.28	10.88	4.25	9.6	3.12	4 x Ø 5/8	5.22	0.56	4.43	1.05	4.59
1-1/2"	1.74	10.77	5.00	12.6	3.88	4 x Ø 5/8	7.87	0.69	4.72	1.61	4.47
2"	2.21	10.96	6.00	15.7	4.75	4 x Ø 3/4	9.84	0.75	5.90	2.07	4.66
3"	3.29	11.46	7.50	25.2	6.00	4 x Ø 3/4	15.7	0.94	9.45	3.07	5.16
4"	4.29	11.93	9.00	31.5	7.50	8 x Ø 3/4	19.7	0.94	11.8	4.03	5.63

Flange ANSI B16.5 / Cl 150 / Sched 80: 1.4404/316L/316											
Surface roughness (flange): Nº / 250 µinch											
Dia	di	B	G	L	LK	N	P	S	T	U	V
1/2"	0.87	10.88	3.50	9.6	2.38	4 x Ø 5/8	5.22	0.44	4.43	0.55	4.59
1"	1.28	10.88	4.25	9.6	3.12	4 x Ø 5/8	5.22	0.56	4.43	0.96	4.59
1-1/2"	1.74	10.77	5.00	12.6	3.88	4 x Ø 5/8	7.87	0.69	4.72	1.50	4.47
2"	2.21	10.96	6.00	15.7	4.75	4 x Ø 3/4	9.84	0.75	5.90	1.94	4.66
3"	3.29	11.46	7.50	25.2	6.00	4 x Ø 3/4	15.7	0.94	9.45	2.90	5.16
4"	4.29	11.93	9.00	31.5	7.50	8 x Ø 3/4	19.7	0.94	11.8	3.82	5.63

Flange ANSI B16.5 / Cl 300 / Sched 40: 1.4404/316L/316											
Surface roughness (flange): N9 / 250 µinch											
Dia	di	B	G	L	LK	N	P	S	T	U	V
1/2"	0.87	10.88	3.75	9.6	2.62	4 x Ø 5/8	5.22	0.56	4.43	0.62	4.59
1"	1.28	10.88	4.88	9.6	3.50	4 x Ø 3/4	5.22	0.69	4.43	1.05	4.59
1-1/2"	1.74	10.77	6.12	12.6	4.50	4 x Ø 7/8	7.87	0.81	4.72	1.61	4.47
2"	2.21	10.96	6.50	15.7	5.00	8 x Ø 3/4	9.84	0.88	5.90	2.07	4.66
3"	3.29	11.46	8.25	25.2	6.62	8 x Ø 7/8	15.7	1.12	9.45	3.07	5.16
4"	4.29	11.93	10.00	31.5	7.88	8 x Ø 7/8	19.7	1.25	11.8	4.03	5.63

Flange ANSI B16.5 / Cl 300 / Sched 80: 1.4404/316L/316											
Surface roughness (flange): N9 / 250 µinch											
Dia	di	B	G	L	LK	N	P	S	T	U	V
1/2"	0.87	10.88	3.75	9.6	2.62	4 x Ø 5/8	5.22	0.56	4.43	0.55	4.59
1"	1.28	10.88	4.88	9.6	3.50	4 x Ø 3/4	5.22	0.69	4.43	0.96	4.59
1-1/2"	1.74	10.77	6.12	12.6	4.50	4 x Ø 7/8	7.87	0.81	4.72	1.50	4.47
2"	2.21	10.96	6.50	15.7	5.00	8 x Ø 3/4	9.84	0.88	5.90	1.94	4.66
3"	3.29	11.46	8.25	25.2	6.62	8 x Ø 7/8	15.7	1.12	9.45	2.90	5.16
4"	4.29	11.93	10.00	31.5	7.88	8 x Ø 7/8	19.7	1.25	11.8	3.82	5.63

Dimensions, t-mass 65I, US units: Compact insertion version

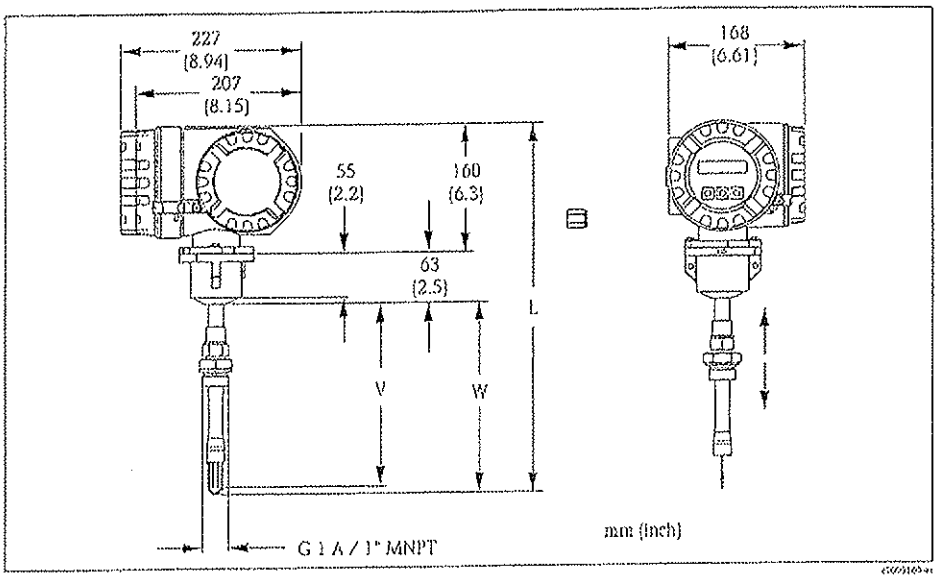

Dimensions, t-mass 65I, US units: Remote sensor housing insertion version

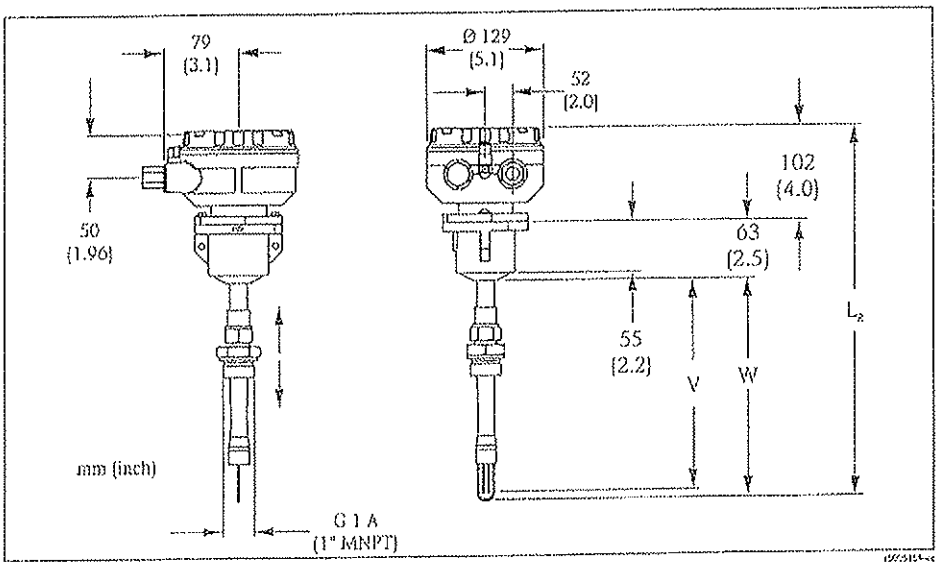

Insertion length version	V	W	L	L_R
9.25"	9.25	9.63	18.4	16.1
13.2"	13.2	13.6	22.3	20.1
17.1"	17.1	17.5	26.3	24.0
23.9"	23.9	24.3	33.1	30.8

Dimensions, flow conditioner, US units: According to ANSI

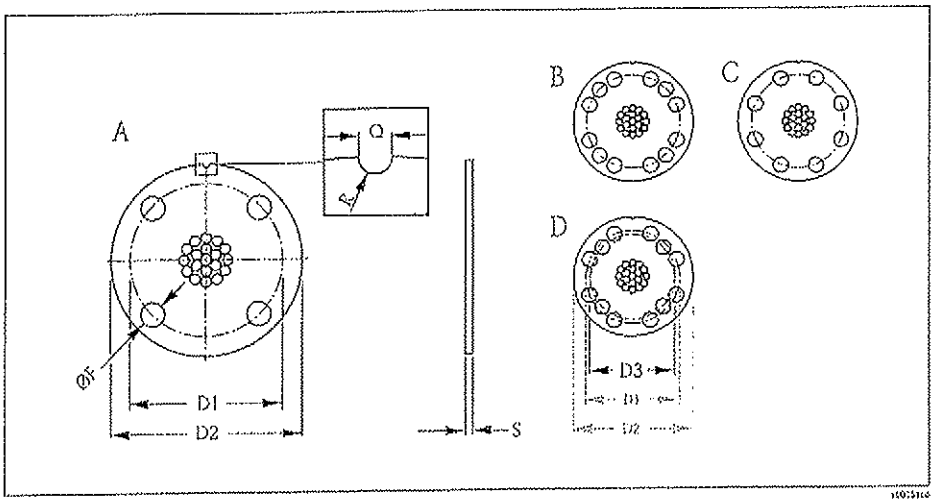

								ANSI Cl. 150/300			
								Sched 40		Sched 80	
Dia	Type	D1	D2	D3	F	Q	R	S	Weight [lb]	S	Weight [lb]
1"	A	3.36	4.33	--	0.67	0.2	0.1	0.18	0.8	0.16	0.7
1-1/2"	A	4.31	5.51	--	0.85	0.2	0.1	0.26	1.9	0.24	1.7
2"	D	4.80	5.90	4.55	0.75	0.2	0.1	0.33	2.8	0.31	2.7
3"	D	6.41	7.67	5.67	0.87	0.2	0.1	0.49	7.0	0.42	6.8
4"	C	7.75	8.97	--	0.81	0.2	0.1	0.65	11.7	0.61	11.9

Weight (SI units)

- Compact version: see table below
- Remote version
  - Sensor: see table below
  - Wall-mount housing: (non hazardous area and zone 2 ATEX II3G)
    - 5 kg (11 lb)
  - Remote field housing: (zone 1 ATEX II2GD)
    - 7 kg (15.4 lb)

Metric units [kg]

t-mass F / DN	15	25	40	50	80	100
Compact version	7.5	8.0	12.5	12.5	18.7	27.9
Remote version (sensor only)	5.5	6.0	10.5	10.5	16.7	25.9

Metric units [kg]

t-mass I / sensor length	235	335	435	608
Compact version	6.4	6.6	7.0	7.4
Remote version (sensor only)	4.4	4.6	5.0	5.4

US units [lb]

t-mass F / DN	1/2"	1"	1 1/2"	2"	3"	4"
Compact version	16.5	17.6	27.5	27.5	41.2	61.5
Remote version (sensor only)	12.1	13.2	23.1	23.1	36.7	57.1

US units [lb]

t-mass I / sensor length	9.25"	13.2"	17.1"	23.9"
Compact version	14.1	14.5	15.4	16.3
Remote version (sensor only)	9.7	10.1	11.0	11.9

For flanged versions, all values (weight) refer to devices with EN/DIN PN 40 (Class 150) flanges.

Materials

Transmitter housing:

- Compact housing: powder coated die-cast aluminium
- Wall-mount housing: powder coated die-cast aluminium
- Remote field housing: powder-coated die-cast aluminium

Connection housing, sensor (remote version):

Powder coated die-cast aluminium

t-mass F sensor:

Sensor body:

- DN 15 to 25 (1/2" to 1"): stainless steel cast CF3M – A351
- DN 40 to 100 (1-1/2" to 4"): 1.4404 to EN10216-5 and 316/316L SS to A312

Flanges (process connections):

According to EN 1092-1 (DIN 2501/DIN 2512N) / ANSI B16.5 / JIS B2238
→ stainless steel 1.4404 to EN 10222-5 and 316L/316 SS to A182

Transducer body:

- 1.4404 to EN10272 and 316L SS to A479
- Alloy C22 and UNS N06022 to B574

Transducer elements:

- 1.4404 to EN10217-7 / 316L SS to A249 or
- 1.4404 to EN 10216-5 / 316L SS to A213
- Alloy C22 and UNS N06022 to B626

O-ring seals:

EPDM, Kalrez, Viton

t-mass I sensor:

Insertion tube:

Sensor length 235 (9"), 335 (13"), 435 (17"), 608 (24"):
1.4404 to EN 10216-5 and 316/316L SS to A312

Transducer body:

- 1.4404 to EN10272 and 316L SS to A479
- Alloy C22 and UNS N06022 to B574

Transducer elements:

- 1.4404 to EN10217-7 / 316L SS to A249 or
- 1.4404 to EN 10216-5 / 316L SS to A213
- Alloy C22 and UNS N06022 to B626

Compression fitting:

1.4404 to EN 10272 and 316/316L SS to A479

Compression fitting seal:

PEEK

Bonded seals:

EPDM, Kalrez, Nitrile
316/316L SS (outer ring)

Low pressure retractable insertion fitting (Cold tap):

Lower tube section:

1.4404 to EN 10272 and 316/316L SS to A479

Upper tube section:

1.4404 to EN 10216-5 and 316/316L SS to A312

Ball valve:

1.4408 to EN 10213-4 and CF8M

Seal:

PTFE

Process connections

t-mass F:
Flanges according EN 1092-1, JIS B2238 and ANSI B16.5

t-mass I:
G 1A or 1" MNPT thread

Note!
For both the flanged and insertion meters it is possible to have wetted parts degreased for oxygen service. Contact your Endress+Hauser service representative for further details.

Human interface

Display elements	▪ Liquid-crystal display: backlit, two lines ▪ Selectable display of different measured values and status variables ▪ At ambient temperatures below –20°C (-4°F) the readability of the display may be impaired.
Operating elements	▪ Local operation with three keys (–, +, E) ▪ Quick Setup menus for straight forward commissioning
Remote operation	Remote operation via HART, PROFIBUS DP, MODBUS RS485

Certificates and approvals

CE mark	The measuring system is in conformity with the statutory requirements of the EC Directives. Endress+Hauser confirms successful testing of the device by affixing to it the CE mark.
C-tick mark	The measuring system meets the EMC requirements of the Australian Communications and Media Authority (ACMA).
Ex approval	Information about currently available Ex versions (ATEX, FM, CSA, etc.) can be supplied by your Endress+Hauser Sales Center on request. All explosion protection data are given in a separate documentation which is available upon request.

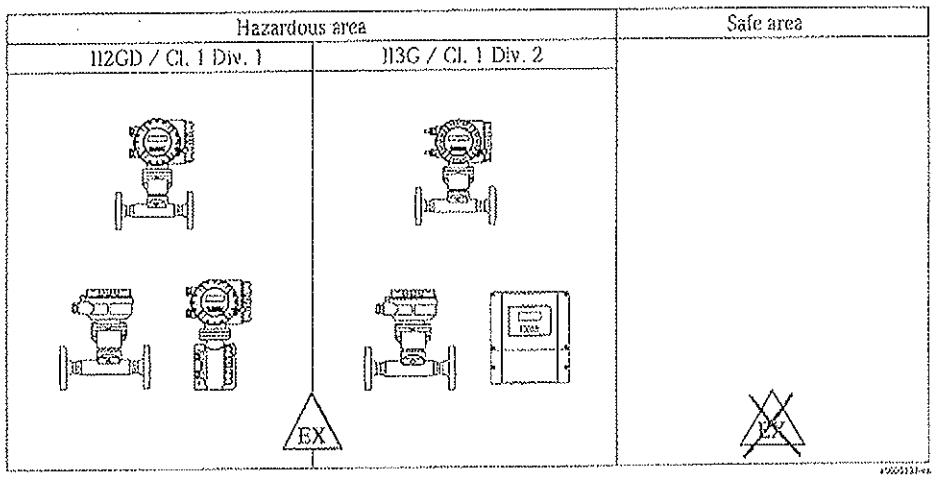

Example of t-mass devices in the hazardous area (Example t-mass 65F)

PROFIBUS DP certification	The flow device has successfully passed all the test procedures carried out and is certified and registered by the PNO (PROFIBUS User Organization). The device thus meets all the requirements of the following specifications: The device can also be operated with certified devices of other manufacturers (interoperability)
MODBUS certification	The measuring device meets all the requirements of the MODBUS/TCP conformity test and has the "MODBUS/TCP Conformance Test Policy, Version 2.0". The measuring device has successfully passed all the test procedures carried out and is certified by the "MODBUS/TCP Conformance Test Laboratory" of the University of Michigan.

Other standards and guidelines	EN 60529: Degrees of protection by housing (IP code) EN 61010-1 Protection Measures for Electrical Equipment for Measurement, Control, Regulation and Laboratory Procedures. EN 61326/A1 (IEC 61326) "Emission in accordance with Class A requirements". Electromagnetic compatibility (EMC- requirements) NAMUR NE 21: Electromagnetic compatibility (EMC) of industrial process and laboratory control equipment. NAMUR NE 43: Standardisation of the signal level for the breakdown information of digital transmitters with analogue output signal. NAMUR NE 53: Software of field devices and signal-processing devices with digital electronics
Pressure Equipment Directive	Flow meters with a nominal diameter smaller or equal DN 25 (1") are covered by Art. 3(3) of the European directive 97/23/EC (Pressure Equipment Directive) and are designed according to sound engineering practice. For larger nominal diameters, optional approvals according to Cat. III are available when required (dependant on fluid and process pressure).

Accessories

The Endress+Hauser service organisation can provide detailed information on request.

Device-specific accessories

Accessory	Description	Order code
Mounting boss	Mounting boss for the t-mass insertion version	DK6MB - *
Cable remote version	Connecting cable for the remote version	DK6CA - *

Measuring principle-specific accessories

Accessory	Description	Order code
Mounting set for transmitter	Mounting set for remote version. Suitable for: – Wall mounting – Pipe mounting – Installation in control panel Mounting set for aluminium field housing: Suitable for pipe mounting (3/4" to 3")	DK6WM - *
Cold Tap mounting set	Insertion mounting set for low pressure	DK6ML - *
Hot Tap mounting set	Insertion mounting set for high pressure	Contact your local Endress+Hauser sales representative for more information.
Flow conditioners	Perforated plate flow conditioners for various line sizes and schedules. (t-mass F sensor only)	Contact your local Endress+Hauser sales representative for more information.

Communication-specific accessories

Accessory	Description	Order code
HART Communicator DXR 375 handheld terminal	Handheld terminal for remote parameterisation and for obtaining measured values via the current output HART (4 to 20 mA).	DXR375 - * * * * Contact your local Endress+Hauser sales representative for more information.

Service-specific accessories

Accessory	Description	Order code
Applicator	Software for selecting and configuring flowmeters. Applicator can be downloaded from the Internet or ordered on CD-ROM for installation on a local PC.	DKA80 - * Contact your local Endress+Hauser sales representative for more information.
ToF Tool - Fieldtool Package	Modular software package consisting of the service program "ToF Tool" for configuration and diagnosis of ToF level measuring devices (time-of-flight measurement) and the "Fieldtool" service program for the configuration and diagnosis of Proline flowmeters. The Proline flowmeters are accessed via a service interface or via the service interface FXA 193. Contents of the "ToF Tool - Fieldtool Package": – Commissioning, maintenance analysis – Configuring flowmeters – Service functions – Visualisation of process data – Trouble-shooting – Controlling the "Fieldcheck" tester/simulator	DXS10 - * * * * * Contact your local Endress+Hauser sales representative for more information.
Fieldcheck	Tester/simulator for testing flowmeters in the field. When used in conjunction with the "ToF Tool - Fieldtool Package" software package, test results can be imported into a database, printed and used for official certification.	50098801 Contact your local Endress+Hauser sales representative for more information.

Accessory	Description	Order code
FieldCare	FieldCare is Endress+Hauser's FDT based Plant Asset Management Tool. It can configure all intelligent field devices in your plant and supports you in managing them. By using status information, it also provides a simple but effective means of checking their health.	Please refer to the product page of the Endress+Hauser Internet page: www.endress.com

Documentation

- ❑ Technical Information (TI069D/24/ae)
- ❑ Operating Instructions HART (BA111D/06/en)
- ❑ Operating Instructions PROFIBUS DP (BA113D/06/en)
- ❑ Operating Instructions MODBUS (BA115D/06/en)
- ❑ Description of Device Functions HART (BA112D/06/en)
- ❑ Description of Device Functions PROFIBUS DP (BA114D/06/en)
- ❑ Description of Device Functions MODBUS (BA116D/06/en)
- ❑ Ex documentation for ATEX (II2G) (XA089D/06/A3)
- ❑ Ex documentation for ATEX (II3G) (XA090D/06/A3)
- ❑ Ex documentation for FM/CSA (Div. 1) (XA091D/06/en)

Registered trademarks

KALREZ® and VITON®
Registered trademarks of E.I. Du Pont de Nemours & Co., Wilmington, USA

HART®
Registered trademark of HART Communication Foundation, Austin, USA

PROFIBUS®
Registered trademark of the PROFIBUS User Organisation, Karlsruhe, Germany

MODBUS®
Registered trademark of the MODBUS Organisation

t-mass™, HistoROM™, S-DAT®, T-DAT™, F-CHIP®, ToF Tool - Fieldtool® Package, Fieldcheck®, Applicator®
Registered or registration-pending trademarks of Endress+Hauser Flowtec AG, Reinach, CH

FLT - 321

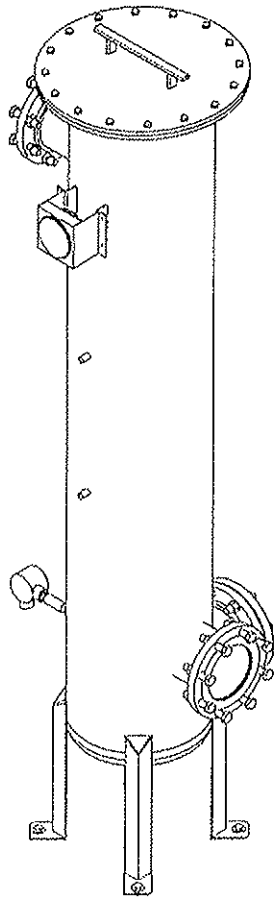

Unison Solutions
B-GON[R] Mist Eliminator Performance Data

Pad Composition: 3 x 37/94 PP (Inlet)
(Option 2) 4 x 16/97 PP
10 x 8/96 PP
1 x 37/94 PP (Outlet)

Operating Conditions:
Gas density: 0.064 lb/ft3
Gas viscosity: 0.0113 cp
Liquid density: 62.4 lb/ft3
Liquid viscosity: 1 cps
Temperature: 70°F
Pressure: 1 Atm (abs)

Air Velocity (feet/sec)	Pressure Drop (" WC)	Collection Efficiencies					
		1 micron	2 microns	3 microns	4 microns	5 microns	6 microns
2	0.15	9%	34%	78%	96%	99.6%	99.9%
4	0.5	16%	78%	99%	99.9%	99.95%	99.99%
6	1	28%	95%	99.9%	99.95%	99.99%	99.99%
8	1.7	45%	99%	99.95%	99.99%	99.99%	99.99%
10	2.5	60%	99.5%	99.99%	99.99%	99.99%	99.99%

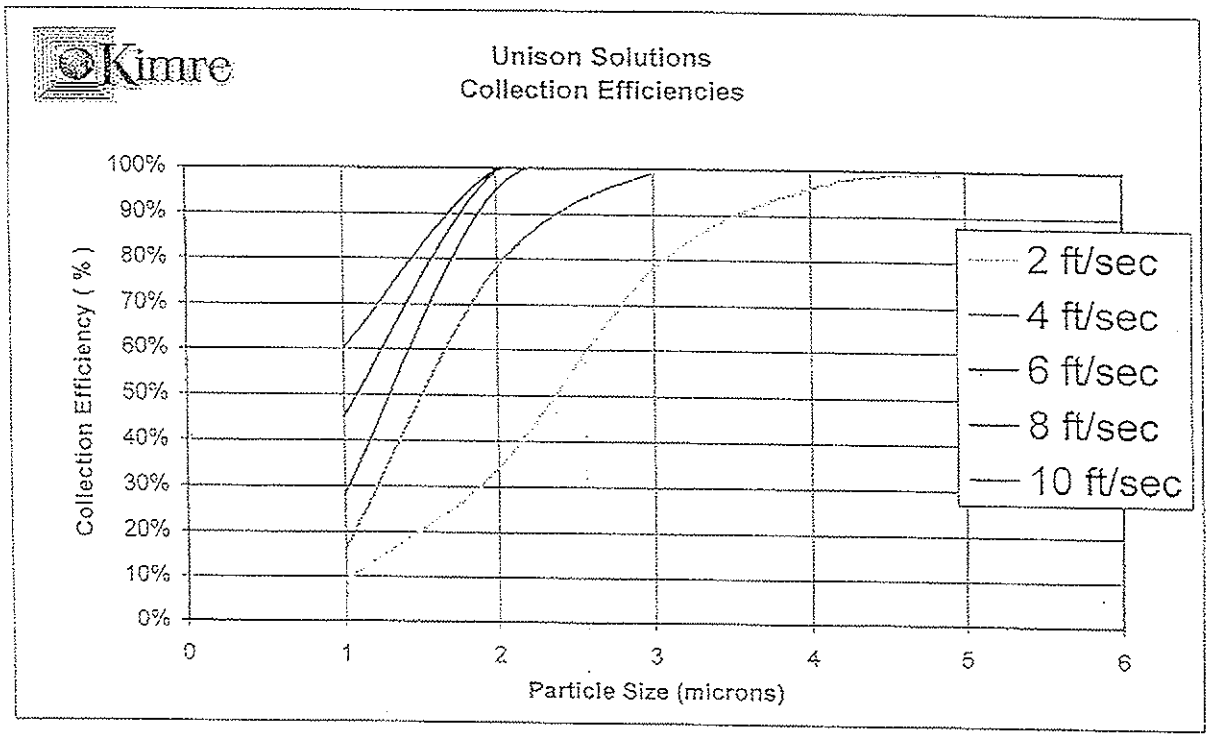

TWIN CITY HOSE, INC.

20615 COMMERCE BLVD. ROGERS, MN 55374
PHONE 763-428-5100 FAX 763-428-5111

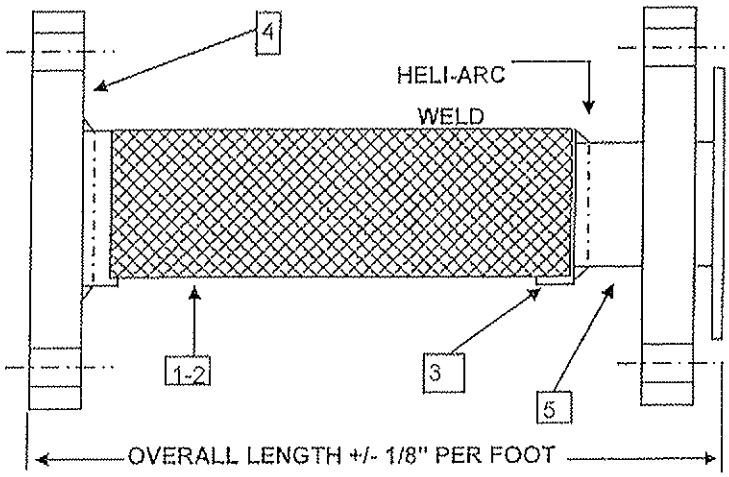

MATERIALS:

#1-2 HOSE: T-321 FLEXONICS 1-LAYER T-304 BRAID

#3 BRAID COLLAR: T-304 STAINLESS STEEL

#4 FLANGES: 150# T-304 STAINLESS STEEL PLATE FLANGES

#5 STUB END: SCH.10 TYPE "C" T-304 STAINLESS STEEL

QTY	SIZE	OVERALL LENGTH	MAX O.D.	WRK. PSIG	TEMP	MAX TEST	LATERAL OFFSET
	1.25"		4.625"	450	70° F	675	
	1.5"		5.5"	410	70° F	615	
	2"		6"	450	70° F	675	
	2.5"		7"	570	70° F	855	
	3"		7.5"	450	70° F	675	
	4"		9"	285	70° F	428	
	5"		10"	210	70° F	315	
	6"	10"	11"	240	70° F	360	0
	8"		13.5"	217	70° F	326	
	10"		16"	165	70° F	248	
	12"		19"	155	70° F	233	
	14"		21"	125	70° F	188	
	16"		23.5"	110	70° F	165	

TEMPERATURE DERATING FACTORS: MULTIPLY X WRK. PSIG

200° F	250° F	300° F	350° F	400° F	500° F	600° F	700° F
0.94	0.92	0.88	0.86	0.83	0.78	0.74	0.7

Notes: Too Short To Warranty

DISTRIBUTED BY:

ENGINEER

Xchanger, Inc. Rating for Model TV-225 ref #91522

Engineer: Paul Boedecker

October 10, 2008

Prepared for:

Unison Solutions

Durham

PERFORMANCE	PROCESS MEDIA SIDE	SERVICE MEDIA SIDE
Fluid Circulated	Mixture (See Page 2)	Ethylene Glycol 50%
Volumetric Flow Rate	1,000.0 Std. ft^3/min	150.7 gal/min
Total Fluid Entering	4,415.4 lb/hr	80,847.8 lb/hr
Liquid		80,847.8 lb/hr
Vapor	See Page 2	
Non-Condensibles	See Page 2	
Vaporized or (Cond.)	(160.9 lb/hr)	
Temperature In	145.0 °F	35.0 °F
Temperature Out	40.0 °F	40.0 °F
Inlet Pressure (Absolute)	20.275 lb/in²	
Velocity (Standard)	284.4 ft/min	6.1 ft/sec
Pressure Loss	0.08 lb/in²	11.8 lb/in²
Fouling Factor	0.00010 ft²-°F-hr/BTU	0.00100 ft²-°F-hr/BTU

Total Heat Exchanged: 308,193 BTU/hr (167,218 BTU/hr Latent)

AVERAGE MEDIA PROPERTIES		
Thermal Conductivity	See Page 2	0.190 BTU/hr-ft-°F
Specific Heat	See Page 2	0.762 BTU/lb-°F
Absolute Viscosity	See Page 2	19.158 lb/ft-hr
Density	See Page 2	66.887 lb/ft^3
Latent Heat of Vapor	See Page 2	

CONSTRUCTION		
Design Temperature	-100 to 200 °F	-400 to 200 °F
Design Pressure (Gauge)	-4.0 to 8.0 lb/in²	-14.3 to 100.0 lb/in²
Test Pressure (Gauge)	12.0 lb/in²	300.0 lb/in²
Cyclic Pressure	No	Not Applicable
Test Procedure	Bubble Test	Bubble Test
Design Calculations	Not Supplied	Not Supplied
ASME Code Stamp	Not Applicable	Not Applicable

Tube Material	: 304L Stainless Steel	Housing Material	: 304 Stainless Steel
Fin Material	: Aluminum	Casing Material	: 304L Stainless Steel
Sealant Material	: Teflon	Phenolic Coating	: None
Removable Core	: Yes, Front Only	Mist Eliminator	: None
Tube Circuit Type	: Nontrapped	Gas Flow Dir.	: Right Hand Horizontal
Drawing Number	:	Weight (Dry/Wet)	: 1,098 / 1,193 lb

CONNECTIONS

Process Inlet : 6" ANSI 150 lb RFF
Process Outlet : 6" ANSI 150 lb RFF
Service Inlet : 2 1/2" S.S. ANSI 150 lb RFF
Service Outlet : 2 1/2" S.S. ANSI 150 lb RFF

NOTES

Construction material suitability must be determined by customer.
The process flow must be uniform, smooth and free of pulsation.
This unit is not designed for cycling process gas pressure.
It is unlikely that condensate will carry-over in process stream.

Xchanger, Inc. Rating for Model TV-225 ref #91522

October 10, 2008

Engineer: Paul Boedecker

Prepared for:

Unison Solutions

Durham

AVERAGE PROCESS GAS PROPERTIES

MEDIA NAME	MW	k	Cp	mu	Hfg	rho
Methane	16.04	0.020	0.536	0.028	0.0	0.055
Carbon Dioxide	44.01	0.010	0.204	0.037	93.5	0.151
Nitrogen	28.01	0.015	0.248	0.044	0.0	0.096
Oxygen	32.00	0.016	0.219	0.050	0.0	0.110
Water	18.02	0.012	0.446	0.023	1039.5	0.062

MW = Molecular Weight
Cp = Specific Heat (BTU/lb-°F)
Hfg = Heat of Vaporization (BTU/lb)
%SAT= % of Saturation
k = Thermal Conductivity (BTU/hr-ft-°F)
mu = Abs. Viscosity (lb/ft-hr)
rho = Density (lb/ft^3)

PROCESS GAS FLOW DATA

	FLOW IN @ 145.0 °F		FLOW OUT @ 40.0 °F		CONDENSED	
MEDIA NAME	lb/hr	%SAT.	lb/hr	%SAT.	lb/hr	% COND.
Methane	1,168.3	0.0	1,168.3	0.0	0.0	0.0
Carbon Dioxide	2,819.8	0.0	2,819.8	0.0	0.0	0.0
Nitrogen	203.8	0.0	203.8	0.0	0.0	0.0
Oxygen	46.8	0.0	46.8	0.0	0.0	0.0
Water	176.7	39.0	15.8	100.0	160.9	91.0
TOTAL	4,415.4		4,254.5		160.9	

Xchanger, Inc. Rating for Model HR-500 ref #91523

October 10, 2008

Engineer: Paul Boedecker

Prepared for:

Unison Solutions

Durham

PERFORMANCE	COLD SIDE	HOT SIDE
Fluid Circulated	LFG	LFG
Volumetric Flow Rate	352 Std. ft^3/min	1,000 Std. ft^3/min
Total Fluid Entering	1,554 lb/hr	4,416 lb/hr
Liquid		
Vapor		
Non-Condensibles	1,554 lb/hr	4,416 lb/hr
Vaporized or (Cond.)		
Temperature In	40 °F	181 °F
Temperature Out	147 °F	145 °F
Inlet Pressure (Absolute)	20.7 lb/in²	20.2 lb/in²
Velocity (Standard)	1,967 ft/min	723 ft/min
Pressure Loss	0.08 lb/in²	0.24 lb/in²
Fouling Factor	0.0001 ft²-°F-hr/BTU	0.0001 ft²-°F-hr/BTU

Total Heat Exchanged: 50,551 BTU/hr

PROPERTIES		
Thermal Conductivity	0.0150 BTU/hr-ft-°F	0.0170 BTU/hr-ft-°F
Specific Heat	0.3040 BTU/lb-°F	0.3150 BTU/lb-°F
Viscosity	0.0340 lb/ft-hr	0.0370 lb/ft-hr
Density	0.0993 lb/ft^3	0.0861 lb/ft^3
Latent Heat of Vapor		

CONSTRUCTION		
Design Temperature	200 °F	225 °F
Design Pressure (Gauge)	8 lb/in²	8 lb/in²
Test Pressure (Gauge)	12 lb/in²	12 lb/in²
Cyclic Pressure	No	Not Applicable
Flow Direction	Right Hand Horizontal	Horizontal
Coating	None	None

Plate-Fin Core : Aluminum	Transitions : Aluminum
Drawing Number :	Weight : 110 lb

CONNECTIONS

Process Inlet : Internal
Process Outlet : 6 inch 150 lb. ANSI RFF
Service Inlet : Internal
Service Outlet : Internal

NOTES

Construction material suitability must be determined by customer.
The process flow must be uniform, smooth and free of pulsation.
This unit is not designed for cycling process gas pressure.

INDUSTRIAL HEAT EXCHANGERS
XCHANGER

1401 7th STREET S.
HOPKINS, MN 55343
952-933-2559
XCHANGER.COM

TV Series Heat Exchanger

TV Series exchangers are designed to reduce VOC emissions by condensing vapors from tank & reactor vents. Designs for service from cooling water, refrigerant & cryogenic liquids are available. TV Series heat exchangers consist of fin-tube core(s) inside an air tight housing. The coolant fluid flows inside the tubes, while the vapors flow across the fins. Cores can optionally be removed through the front or rear covers.

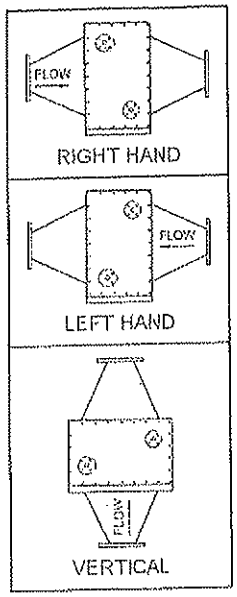

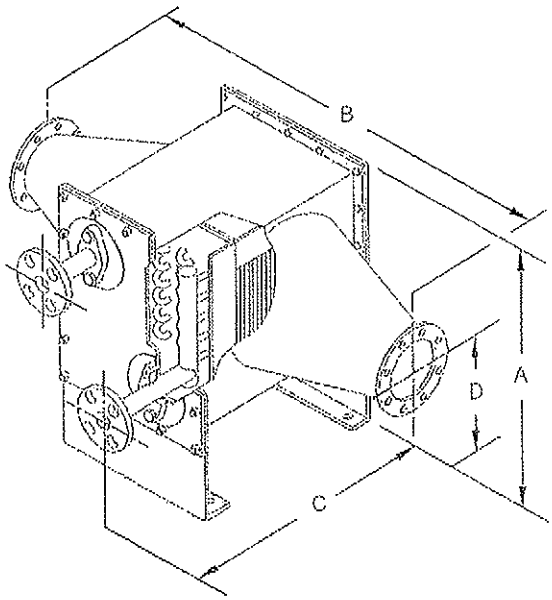

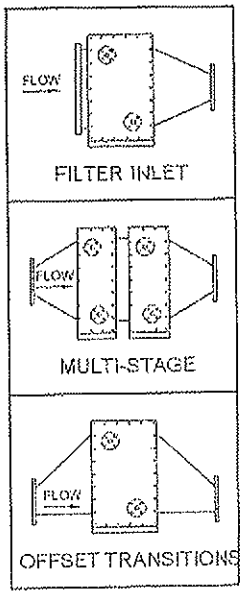

SEE LINE #54 OF DATA SHEET FOR APPROXIMATE DIMENSIONS

Std. Lead Time: 8 Weeks

Expedited Shipping Schedule (If Available)		
Working Days After Drawing Approval	Complete Units	Repl. Cores
5	---	50%
10	50%	25%
15	25%	15%
20	15%	10%
30	10%	---
40	---	---

Add 10 days to schedule for epoxy phenolic coating

Design Options:

Connection types: tube, pipe, flange, NPT, ferrule, etc
Materials of construction: carbon or stainless steel, copper, aluminum, cupro-nickel, Hastelloy, etc
Epoxy phenolic coating for corrosion protection
Mist eliminator to prevent condensate carryover
Inspection/Access ports
Air filters: HEPA, pleated, metal, etc
Units can be built to required dimensions
Drainable tube circuiting for freezing protection

Accessories: (Prices Subject To Change)

Instrument Coupling:		$ 60
Thermometer (Coupling Included):		$ 90
Differential Pressure Gauge:		$ 280
Automatic Drain Trap:	3/4", 330 lb/hr	$ 320
Temperature Control Valve:	3/4", 30 GPM	$ 600
(Regulates coolant flow to maintain a constant exiting gas temperature)	1", 50 GPM	$ 630

Others available upon request

INDUSTRIAL HEAT EXCHANGERS
XCHANGER

1401 7th STREET S.
HOPKINS, MN 55343
952-933-2559
XCHANGER.COM

HR Series Heat Exchanger

HR Series heat exchangers recover heat from one gas stream to another. Unit sizes for air flows up to 3,500 CFM and 500°F are available. Both airstreams should be filtered and pulsating flow, such as that produced by rotary lobe blowers, should be dampened by a chambered silencer prior to entering the heat exchanger.

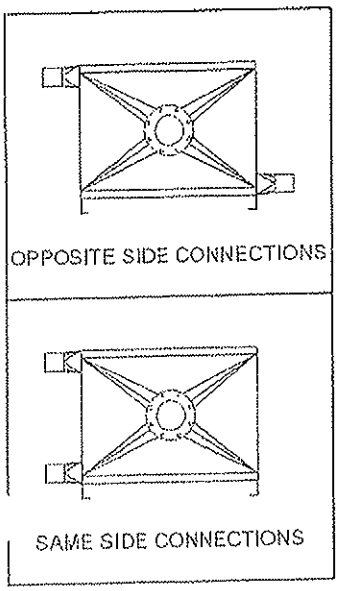

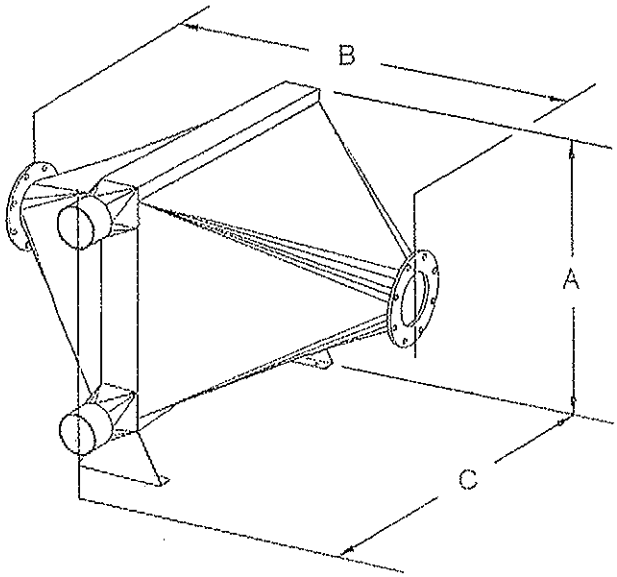

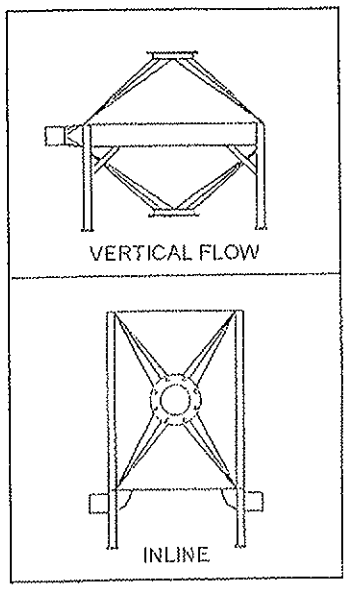

SEE LINE #49 OF DATA SHEET FOR APPROXIMATE DIMENSIONS

Std. Lead Time: 6 weeks

Expedited Shipping Schedule (If Available)	
Working Days After Drawing Approval	HR Series
5	20%
10	10%
15	5%
20	2.5%
30	---

Add 10 days to schedule for epoxy phenolic coating.

Design Options:

- Connection types: tube, pipe, flange, NPT, ferrule, etc
- Epoxy phenolic coating for corrosion protection
- Inspection/Access ports
- Air Filters: HEPA, pleated, metal, etc
- Units can be built to required dimensions

Accessories: (Prices Subject To Change)

Instrument Coupling:	$ 60
Thermometer (Includes Coupling):	$ 90
Differential Pressure Gauge:	$ 280

Others available upon request

X7F08

INDUSTRIAL HEAT EXCHANGERS
XCHANGER

1401 7th STREET S.
HOPKINS, MN 55343
952-933-2559
XCHANGER.COM

CONDITIONS OF SALE

PROPOSAL - Prices are firm for 30 days. This proposal is confidential and has been prepared for your use solely in considering the purchase of the equipment described. Transmission of this information to others or use by you for other purposes is unauthorized without our written consent.

TERMS OF PAYMENT - Unless otherwise specified, terms are net cash 30 days after date of shipment. Invoices not paid within these terms of payment are subject to an interest charge of one and one half percent (1½%) per month.

SHIPMENT - F.O.B. plant as per our proposal with machinery mounted on skids only, suitable for domestic shipment, unless otherwise specified. Shipping dates given therein are approximate and are computed from time of receipt at our main office of all details pertaining to the order essential to its proper execution. We are not liable for any delay in the performance of contracts and orders, or in the shipment and delivery of goods, or for any damage suffered by the buyer by reason of delay, when such delay is, directly or indirectly, caused by or in any manner arises from fires, floods, accidents, riots, war, government interference, priorities, embargoes, strikes, shortage of labor, fuel, materials of supplies, inadequate transportation facilities or any other cause or causes (whether or not similar in nature to any of those herein-before specified) beyond our control. If more than one shipment is made, each may be separately invoiced.

DELIVERY - All costs incident to the erection of the equipment in purchaser's plant shall be borne by the purchaser, unless otherwise specified. When delivery of material is extended beyond 6 months from date of receipt of order, at your request, the price may be adjusted to compensate for any increase in costs prevailing at time of shipment, or any storage charges.

GUARANTEE DURATION - 1 year of date of start-up, not to exceed 18 months from the date of shipment of this equipment to the original purchaser

GUARANTEE - Within the guarantee term,. Xchanger Inc. will replace or repair any part or parts free of charge, F.O.B. our factory, provided our examination shows the item to be truly defective by reason of inferior materials or poor workmanship. The part or parts must have been used for the purpose as intended and in accordance with our instruction. No allowance will be made for repairs or alterations not previously agreed to by our written consent., or for cost of removal or reinstallation of the equipment.

This guarantee does not cover damages resulting from misuse, neglect, alteration, or accident, specifically including operating at temperatures or pressures in excess of those for which the equipment was specified and furnished. Motors, controls and other purchased parts are warranted by their original manufacturers and such warranties will be carried out in accordance with the usual terms thereof.

Xchanger Inc. reserves the right to invoice for all charges incurred by reason of inferior materials or poor workmanship when repairs are made in the field at the customer's specific request.

PERFORMANCE - Performance figures are estimates only, based on the best reliable engineering practice. The actual performance may be influenced by prevailing conditions during operation.

CLAIMS - Claims for loss or damage in transit are the responsibility of the consignee, however, we will lend every possible assistance. Any claims for shortages not covered by the common carrier, in order to receive consideration, must be made within 10 days from date of delivery.

LIMITATION OF LIABILITY - Our liability on any claim of any kind, including negligence, for any loss or damage arising out of, connected with, or resulting from an order or from the performance, design, manufacture, sale, delivery, resale, installation, technical direction of installation, inspection, repair, operation or use of any equipment covered by or furnished under this order shall in no case, exceed the price allocable to the equipment or unit thereof which gives rise to the claim and shall terminate 1 year after the completion of installation of the equipment.

In offering this proposal the seller warrants that it has exercised its best efforts to satisfy the guidelines indicated in the Occupational Safety and Health Act of 1970. However, the Occupational Safety and Health Act of 1970 does not clearly define product specifications, nor will the endorsement agency for the Occupational Safety and Health Act of 1970 certify a product as in compliance with the Occupational Safety and Health Act of 1970. For items designed by others, Seller will pass on to Buyer whatever warranty/indemnity it has obtained from its supplier and will cooperate with Buyer in Buyer's enforcement thereof.

In no event, whether as a result of breach of our warranty or alleged negligence, shall we be liable for special or consequential damages including, but not limited to, loss of profits or revenue, loss of use of the equipment or any associated equipment, cost of capital, cost of substitute equipment, facilities or services, downtime costs, or claims of customers of the purchaser for such damages.

CANCELLATION -Cancellation will be accepted upon payment of a percentage of the total special equipment price equal to the percentage of total work completed.

TAXES - Our proposal does not include federal, state or local sales, privilege, use or other taxes of any kind applicable to the sale of the equipment involved. These taxes shall be paid by the purchaser or, in lieu thereof, the purchaser shall provide us with a tax exemption certificate acceptable to the proper taxing authority.

DRAWINGS & MANUALS - The price quoted therein includes three (3) sets of applicable drawing prints, or, one (1) set of suitable reproducible transparencies, and one (1) installation, operation and maintenance manual. Additional drawings or manuals will be furnished at a nominal charge.

Thomas Products, Ltd.
987 West Street • Southington, CT 06489-1023
Toll Free: (800) 666-9101 • Telephone: (860) 621-9101 • Fax: (860) 621-1470
E-Mail: Sales@ThomasProd.com • Website: www.ThomasProd.com

All Categories > Level Switch > Liquid Level Indicators > Liquid Level Indicators - 5100 Series > Item # 43677

Item # 43677 Liquid Level Indicators - 5100 Series

$85.00

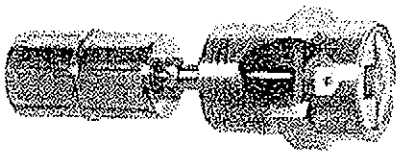

larger image

Liquid Level Indicators - 5100 Series

The housing has 2 separate chambers. In the front chamber behind a transparent lens is a 2 color roller, half red, half green and it is equipped with a magnet. In the rear chamber is a magnet equipped float free to swing with the action of the liquid's level. The poles of the 2 magnets are opposite creating a permanent interlock. As the liquid level falls, the float and magnet swing to rotate the roller exposing the red side indication low liquid level. Accordingly, as the level rises, the green side indicating a satisfactory liquid level condition appears.

Specifications · Operation · Notes

Specifications

Mounting Sizes	3/4" NPT
Floats	316 SST
Operating Temperature	-40^0 to 225^0F
Operating Pressure	400 psi
Housing Material	316 SST
Indication	Red - Liquid level is Low / Green - Liquid level is OK
Application	Side of tank indicator, use in hazardous locations, non-electrical, 2 color flag, (red & green)
Notes	Please refer to notes 1, 2 & 5

Operation

The housing has 2 separate chambers. In the front chamber behind a transparent lens is a 2 color roller, half red, half green and it is equipped with a magnet. In the rear chamber is a magnet equipped float free to swing with the action of the liquid's level. The poles of the 2 magnets are opposite creating a permanent interlock. As the liquid level falls, the float and magnet swing to rotate the roller exposing the red side indication low liquid level. Accordingly, as the level rises, the green side indicating a satisfactory liquid level condition appears.

Series L6

FLOTECT® Liquid Level Switch

Easy In-wall or External Installation, Up to 2000 psig (138 bar)

MODEL L6 WITH EXTERNAL FLOAT CHAMBER

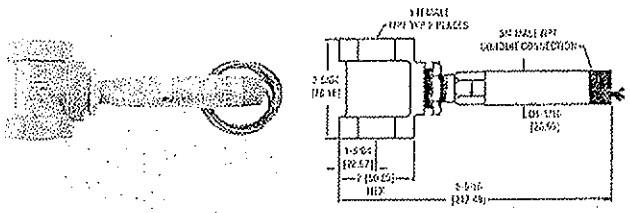

MODEL L6 WITH SPHERICAL FLOAT

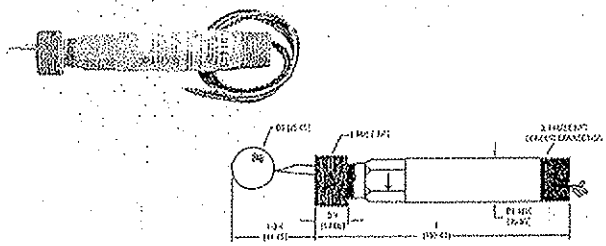

MODEL L6 WITH CYLINDRICAL FLOAT

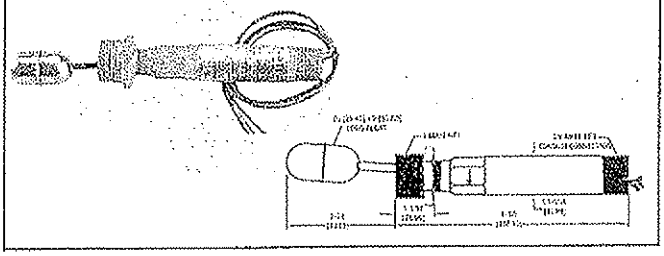

SPECIFICATIONS

Service: Liquids compatible with wetted materials.
Wetted Materials:
- **Float:** Solid polypropylene or 304 SS.
- **Lower Body:** Brass or 303 SS.
- **Magnet:** Ceramic.
- **External Float Chamber (Tee):** Matches lower body choice of brass or 303 SS.
- **Other:** Lever Arm, Spring, Pin, etc.: 301 SS.

Temperature Limit: -4 to 220°F (-20 to 105°C) Standard, MT high temperature option 400°F (205°C)(MT not UL, CSA or ATEX). ATEX compliant AT option ambient temperature: -4 to 167°F (-20 to 75°C) process temperature: -4 to 220°F (-20 to 105°C).
Pressure Limits: See chart below.

Enclosure Rating: Weatherproof and Explosion-proof. Listed with UL and CSA for Class I, Groups A, B, C and D; Class II, Groups E, F, and G. (Group A on stainless steel body models only).ATEX CE0344 Ex II 2 G EEx d IIC T6 Process Temps≤75°C. EC-Type Certificate No.: KEMA 04ATEX2128
Switch Type: SPDT snap switch standard, DPDT snap switch optional.
Electrical Rating: UL models: 5A @ 125/250 VAC (V~). CSA and ATEX models: 5A @ 125/250 VAC (V~); 5A res., 3A ind. @ 30 VDC (V=). MV option: .1A @ 125 VAC (V~). MT option: 5A @125/250 VAC (V~). [MT option not UL, CSA or ATEX].
Electrical Connections: UL models: 18 AWG, 18" (460 mm) long. CSA and ATEX models: terminal block.
Upper Body: Brass or 303 SS.
Conduit Connection: 3/4" male NPT standard, 3/4" female NPT on junction box models.
Process Connection: 1" male NPT on models without external float chamber, 1" female NPT on models with external float chamber.
Mounting Orientation: Horizontal with index arrow pointing down.
Weight: Approximately 1 lb (.5 kg) without external float chamber, 1.75 lb (.8 kg) with external float chamber.
Specific Gravity: See chart below.
Agency Approvals: UL, CSA, CE and ATEX.

MODELS

Model No.	Body	Installation	Float Material	Max. Pressure psig (bar)	Min. Sp. Gr.	
L6EPB-B-S-3-O	Brass	Side Wall Mounting	Polypropylene Spherical	1000 (69)	0.9	
L6EPB-B-S-3-A	Brass	Side Wall Mounting	304 SS Cylindrical	200 (13.8)	0.5	
L6EPB-B-S-3-C	Brass	Side Wall Mounting	304 SS Spherical	350 (24.1)	0.7	
L6EPB-B-S-3-B	Brass	Brass External Float Chamber (Tee)	Polypropylene Spherical	250 (17.2)	0.9	
L6EPB-B-S-3-H	Brass	Brass External Float Chamber (Tee)	304 SS Spherical	250 (17.2)	0.7	
L6EPB-S-S-3-O	303 SS	Side Wall Mounting	Polypropylene Spherical	2000 (138)	0.9	
L6EPB-S-S-3-A	303 SS	Side Wall Mounting	304 SS Cylindrical	200 (13.8)	0.5	
L6EPB-S-S-3-C	303 SS	Side Wall Mounting	304 SS Spherical	350 (24.1)	0.7	
L6EPB-S-S-3-S	303 SS	304 SS External Float Chamber (Tee)	Polypropylene Spherical	2000 (138)	0.9	
L6EPB-S-S-3-L	303 SS	304 SS External Float Chamber (Tee)	304 SS Spherical	350 (24.1)	0.7	

Surprisingly compact, the Flotect® L6 is designed and built for years of trouble-free service in a wide variety of process liquid level applications. Operation is simple and dependable with no mechanical linkage as the level switch is magnetically actuated. The float lever pivoted within the body moves when the process liquid displaces the float. A magnet on the opposite end of the float lever controls a second magnet on the switch actuating lever located in the switch housing.

FEATURES

- Leak proof lower body machined from bar stock
- Choice of models for direct side wall mounting or mounted in a tee to act as an external float chamber
- Weatherproof
- Explosion-proof (listings included in specifications)
- Electrical assembly can be easily replaced without removing the unit from the installation so that the process does not have to be shut down
- Sensitive to level changes of less than 1/2" (12 mm)

Options:

Gold Plated Contacts option for dry circuits,add suffix -MV (see electrical rating in specifications)
High Temperature option rated 400°F (204°C), add suffix -MT (see electrical rating in specifications, no listings or approvals, only available on models with stainless steel floats)
CSA and UL approved construction, includes weatherproof and explosion-proof junction box, add suffix -CSA
ATEX approved construction includes, weatherproof and explosion-proof, junction box add suffix -AT
DPDT contacts, change seventh character in model number to "D". Example: L6EPB-B-D-3-O
303 Stainless Steel Upper Body, change fifth character in model number to "S". Example: L6EPS-S-S-3-S

Options Not Shown: 1-1/2" and 2" male NPT process connection, 2" female NPT connection tee, and top mount.

PV Series SuperVent™ Air Eliminator

Honeywell

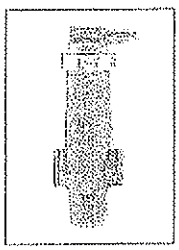

The unique design of the Honeywell PV Series SuperVent™ breaks apart air bubbles, absorbs stagnant air pockets and eliminates troublesome air from hydronic heating systems. This results in the elimination of annoying gurgling and sometimes-costly maintenance. Its rugged design stands up to tough conditions and continuous service, providing you with leak-proof operation, reduced service intervals and the elimination of callbacks.

PV Series SuperVent™ Air Eliminator

EFFECTIVELY ELIMINATES AIR AND NOISE FROM HYDRONIC HEATING SYSTEMS

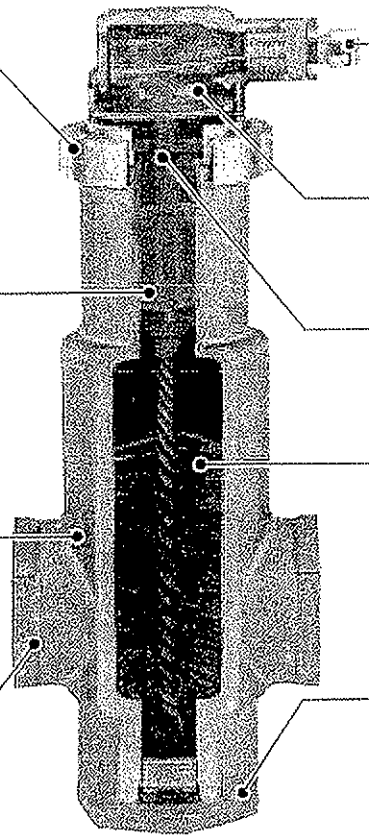

MODEL #	SIZE	CV	CONNECTION TYPE
PV075	3/4"	13 Cv	NPT
PV075S	3/4"	13 Cv	Sweat
PV100	1"	22 Cv	NPT
PV100S	1"	22 Cv	Sweat
PV125	1-1/4"	38 Cv	NPT
PV125S	1-1/4"	38 Cv	Sweat
PV150	1-1/2"	53 Cv	NPT
PV200	2"	95 Cv	NPT
PVU	Universal models available for vertical risers.		

Automation and Control Solutions

In the US:

Honeywell

1985 Douglas Drive North

Golden Valley, MN 55422

In Canada:

Honeywell Limited

35 Dynamic Drive

Toronto, Ontario M1V 4Z9

Phone: (800) 328-5111

Email: info@honeywell.com

customer.honeywell.com

Honeywell

50-8142

July 2005

© 2005 All Rights Reserved. Honeywell, Inc.

Series 4000

Capsuhelic® Differential Pressure Gages

Measures Pressure, Vacuum or Differential, Suitable for Internal Pressures to 500 psig

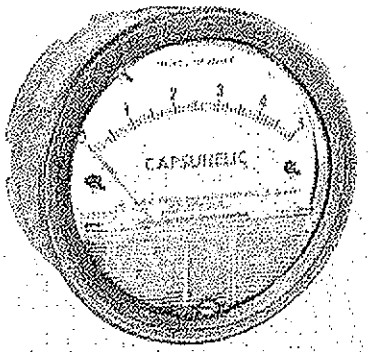

Capsuhelic® Pressure Gage has a large, easy-to-read 4" (102 mm) dial.

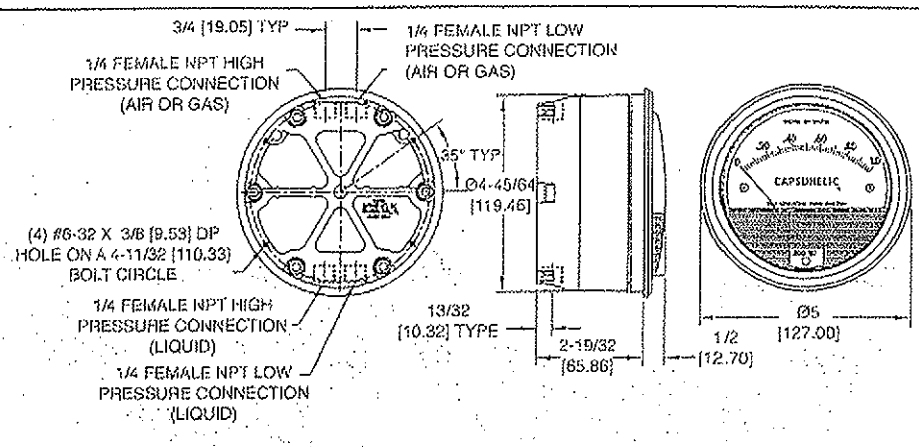

Dimensions, Series 4000 Capsuhelic® Pressure Gages.

The Capsuhelic® gage is designed to give fast, accurate indication of differential pressures. The gage may be used as a read-out device when measuring flowing fluids, pressure drop across filters, liquid levels in storage tanks and many other applications involving pressure, vacuum or differential pressure.

Using the basic design of Dwyer's time-proven Magnehelic® gage, the Capsuhelic® gage contains a simple, frictionless movement that permits full scale readings as low as 0.5 inch water column. The pressure being measured is held within a capsule which is an integral part of the gage. This containment of the pressure permits the use of the gage on system pressures of up to 500 psig, even when differentials to be read are less than 0.1 inch w.c.

The diaphragm-actuated Capsuhelic® gage requires no filling liquid which might limit its outdoor applications. Zero and range adjustments are made from outside the gage, and there is no need to disassemble the gage in normal service.

Note: May be used with hydrogen where pressures are less than 35 psi.

SPECIFICATIONS

Service: Aluminum Case: Air and compatible gases and oil based liquids. Brass Case: Air and compatible gases and water based liquids.
Wetted Materials: Consult factory.
Housing: Die cast aluminum with impregnated hard coating, standard. Optional forged brass housing is required for water or water based fluids. Special material diaphragms available, contact factory.
Accuracy: ±3% of full scale at 70°F (21.1°C). (±2% on 4000S models, ±4% on 4200, 4210, 4215, 4220, 4300, 4400, and 4500).
Pressure Limits: -20" Hg to 500 psig. (-0.677 bar to 34.4 bar).
Temperature Limits: 20 to 200°F (-6.67 to 93.3°C).
Size: 4" (101.6 mm) diameter dial face.
Mounting Orientation: Diaphragm in vertical position. Consult factory for other position orientations.
Process Connections: 1/4" female NPT high and low pressure taps, duplicated - one pair top for air and gas, and one pair bottom for liquids.
Weight: 3 lb, 3 oz (1.45 kg) aluminum case; 7 lb, 13 oz (3.54 kg) brass case.
Standard Accessories: Two 1/4" NPT plugs for duplicate pressure taps, four flush mounting adapters with screws and four surface mounting screws.

MOUNTING

Capsuhelic® gages may be flush mounted in a panel or surface mounted. Hardware is included for either. For flush mounting, a 4 1/8" diameter cutout in panel is required. Where high shock or vibration are problems, order optional A-496 Heavy Duty flush mount bracket. Optional A-610 kit provides simple means of attaching gage to 1 1/2"-2" horizontal or vertical pipe. Installation is same as Magnehelic® gage shown on page 4. All standard models are calibrated for vertical mounting. Gages with ranges above 5 in. w.c. can be factory calibrated for horizontal or inclined mounting on special order.

Flush mounted in panel.

Back view shows flush mounting adapters.

Back view for surface mounting.

OPTIONS AND ACCESSORIES

Adjustable Signal Flag — Integral with plastic gage cover; has external reset screw. May be ordered factory installed on gage or separately for field installation. Specify ASF suffix after model number.

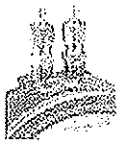

A-314 Bleed Fitting — For easier, safer purging of trapped air when using gage with liquids. Also useful for draining condensate when installed in lower ports. To open, simply loosen hex nut. Solid brass.

Forged Brass Case — For applications involving water or water based liquids. To order, add suffix "B" after model number. Example: 4205B.

Transparent Scale Overlays — Available in bright red, green or yellow to accent critical pressure zones. Specify which color and portion of scale to be covered with each.

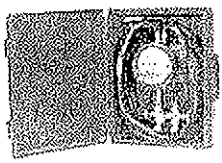

A-471 Portable Kit — Includes plastic case, mounting bracket, A-309 3-way manifold valve, (2) A-230 high pressure hoses and all necessary fittings. Assembly required. Gage not included.

Straightforward design assures maintenance-free performance

Top low pressure connection *(for Air or Gas)* connects to chamber in back of diaphragm. High pressure air or gas port (cut away; not shown) connects with chamber in front of diaphragm through passageways in case.

Precision made case is offered in two materials. Standard is die cast aluminum coated inside for resistance to most oils and similar fluids. Optional forged brass case is recommended when using water or water based liquids. One case size for all pressure ranges — can be either surface or flush mounted.

Silicone rubber diaphragm with integrally molded O-ring is sealed between the case and backplate. Diaphragm motion is restricted to prevent damage due to over-pressure.

Diaphragm support plate of stainless steel minimizes position or attitude sensitivity.

Calibrated range spring is a flat leaf of nickel plated spring steel. Small amplitude of motion assures consistency and long life. It reacts to pressure on diaphragm. Live length factory adjusted for calibration.

Bottom high pressure connection *(for Liquids)* connects to chamber in front of diaphragm. Low pressure liquid connection (not visible) connects with chamber in back of diaphragm through passageways in case.

Range spring calibration is set by custom camlock. Rate adjust and rate adjust lock are coaxial and are factory set and sealed.

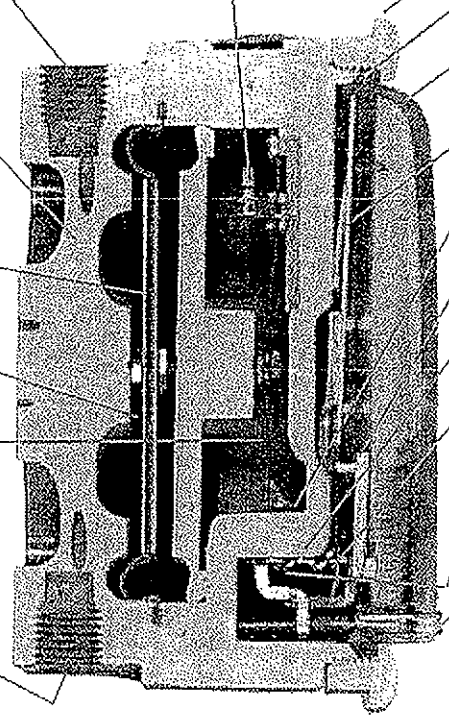

Bezel provides flange for flush mounting in panel.

O-ring seal for cover assures dust tight integrity of case.

Clear plastic front cover is highly resistant to breakage. Provides undistorted viewing of pointer and scale.

Precision scale, screen printed on aluminum, is accurate and easy to read.

Samarium cobalt magnet mounted at end of range spring rotates helix without mechanical linkages.

"Wishbone" assembly provides mounting for helix, helix bearings and pointer shaft.

Thin wall magnetic "window" is well braced and of minimum area for maximum pressure capability.

Jeweled bearings for helix are shock resistant mounted. They provide virtually friction-free rotation for helix. Rotation is damped with high viscosity silicone fluid.

Helix is precision milled from an alloy of high magnetic permeability, mounted in jeweled bearings, and rotates to align with magnetic field of magnet and transmit pressure indication to pointer.

Zero adjustment screw is conveniently located in plastic cover, accessible without removing cover. "O" ring seal provides dust seal.

Patent Nos. 4,011,759
4,030,365

SERIES 4000 CAPSUHELIC® GAGE

Scales reading directly in flow, heights, etc., are also available.

Model Number	Range, Inches of Water
*4000-0	0-.50
*4001	0-1.0
*4002	0-2.0
*4003	0-3.0
*4004	0-4.0
*4005	0-5.0
4006	0-6.0
4008	0-8.0
4010	0-10
4015	0-15
4020	0-20
4025	0-25
4030	0-30
4040	0-40
4050	0-50
4060	0-60
4080	0-80
4100	0-100
4150	0-150
4200	0-200
4300	0-300
4400	0-400
4500	0-500

Model Number	Range Zero Center Inches of Water
*4302	1-0-1
*4304	2-0-2
4310	5-0-5
4320	10-0-10
4330	15-0-15

Model Number	Range PSI
4201	0-1
4202	0-2
4203	0-3
4204	0-4
4205	0-5
4210	0-10
4215	0-15
4220	0-20
†4230S	0-30
†4240S	0-40
†4260S	0-60
†4280S	0-80
†42100S	0-100
†42200S	0-200
†42300S	0-300

Model Number	Range MM of Water
*4000-25MM	0-25
*4000-50MM	0-50
*4000-80MM	0-80
*4000-100MM	0-100

Special Purpose Ranges

Scale No. 4401
Square Root
Specify Range

Scale No. 4402
Blank Scale
Specify Range

Model Number	Range, CM of Water
4000-15CM	0-15
4000-20CM	0-20
4000-25CM	0-25
4000-40CM	0-40
4000-50CM	0-50
4000-80CM	0-80
4000-100CM	0-100
4000-150CM	0-150
4000-200CM	0-200
4000-250CM	0-250
4000-300CM	0-300

Zero Center Ranges

*4300-4CM	2-0-2
*4300-10CM	5-0-5
4300-30CM	15-0-15

Model Number	Range, Pascals
*4000-125PA	0-125
*4000-250PA	0-250
*4000-500PA	0-500
*4000-750PA	0-750

Zero Center Ranges

*4300-500PA	250-0-250

Model Number	Range, Kilopascals
*4000-1KPA	0-1
4000-1.5KPA	0-1.5
4000-2KPA	0-2
4000-3KPA	0-3
4000-4KPA	0-4
4000-5KPA	0-5
4000-8KPA	0-8
4000-10KPA	0-10
4000-15KPA	0-15
4000-20KPA	0-20
4000-25KPA	0-25
4000-30KPA	0-30

Zero Center Ranges

*4300-1KPA	.5-0-.5
4300-3KPA	1.5-0-1.5

Model Number	Range Feet of Water
4616B	0-16
4635B	0-35

Available with brass case only

Accessories
A-298 Flat Flush Mounting Bracket
A-309 3-way Manifold Valve
A-314 Bleed Fitting
A-370 Mounting Bracket
A-471 Portable Kit
A-496 Flush Mount Bracket
A-610 Pipe Mount Kit

Options

Add Options as Suffix, Example 4001-ASF
-ASF (Adjustable Signal Flag)
B (Brass Case)
Scale Overlays - Red, Green, Mirrored or combination. Specify Locations

*These ranges available for vertical scale position only. †These ranges use Sparkalic® gage movement.

PRECISION INSTRUMENT COMPANY

MODEL '301L', LIQUID FILLED GAUGES

Our '300' Series Gauge Line Is A High Quality Line Of Liquid Filled Gauges. The Glycerine Filling Helps Dampen The Effects Of Pulsation And Vibration, While Also Perpetually Lubricating The Movement (And Keeping Contaminates Such As Dirt Away From All Moving Parts) Which Will Extend The Life Of The Gauge.

This Gauge Has Been Specifically Designed With The Original Equipment Manufacturers In Mind And Are Typically Used On Hydraulic & Pneumatic Systems As Well As Any Commercial Or Industrial Application Not Corrosive To 316LSS Wetted Parts Where Glycerine Filling Is Suitable For Use.

SPECIFICATIONS:

- Available Dial Sizes: 2 ½, 4", 6"
- Available Connection Sizes:
  1/4"MNPT on 2", 2 ½ and 4"
  1/2"MNPT on 4" and 6"
- Stainless Steel Case And Bezel
- SS Internals
- 316 SS Bourdon Tube & Connection
- Liquid Filled (Dry Available)
- Accuracy : 2 ½ Dial Size = 1.5 %
  4" and 6" Dial Size = 1 %
- Dual Scale: PSI & Bar (x100=kPa)
  (Single Scale available)
- Ambient temperature: FILLED: 30'F to 160'F
  DRY: -30'F to 180'F

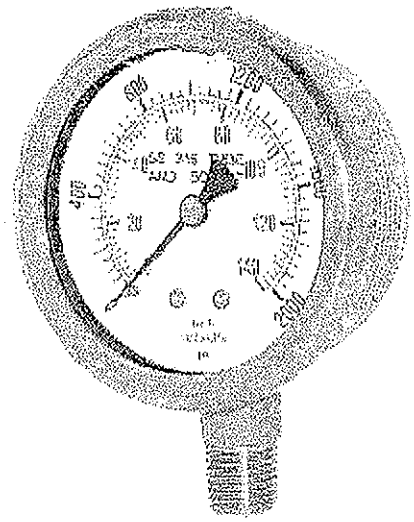

RANGE	CODE	Major In	Minor In
30/0"VAC	A	5	0.5
30/0/15	CB	5	0.5
30/0/30	CC	10	1
30/0/60	CD	10	1
30/0/100	CE	20	2
30/0/150	CF	20	2
30/0/300	CH	50	10
0/15	B	2	0.2
0/30	C	5	0.5
0/60	D	10	1
* 0/100	E	20	2
0/160	F	20	2
0/200	G	40	4
0/300	H	50	5
0/400	I	50	5
0/500	J	100	10
0/600	K	100	10
0/800	L	100	10
0/1000	M	200	20
0/1500	N	200	20
0/2000	O	400	50
0/3000	P	500	50
0/4000	Q	500	50
0/5000	R	1000	100
0/6000	S	2000	200
0/10,000	U	2000	200
0/15,000	V	2000	200

Some ranges not available in all dial sizes, please call with your particular application

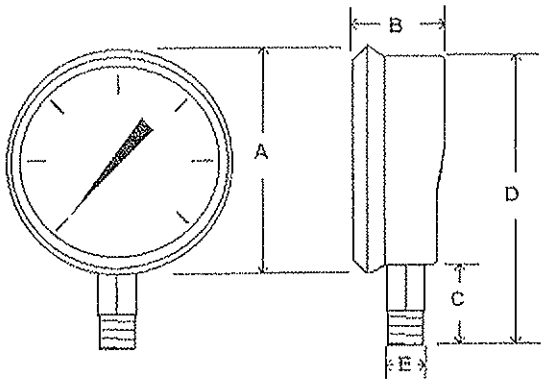

		A	B	C	D	E
2 ½ Dial	In	2.80	1.28	1.07	3.55	1/4" Npt
	MM	71	33	27	90	
4" Dial	In	4.32	1.63	1.25	5.57	1/4" or ½npt
	MM	110	42	32	141	
6" Dial	In	6.54	1.70	1.68	8.22	1/4" or ½npt
	MM	166	43	43	210	

Series 4000

Capsuhelic® Differential Pressure Gages

Measures Pressure, Vacuum or Differential, Suitable for Internal Pressures to 500 psig

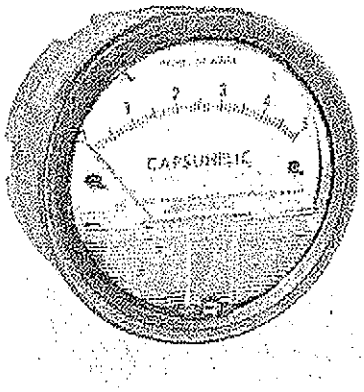

Capsuhelic® Pressure Gage has a large, easy-to-read 4" (102 mm) dial.

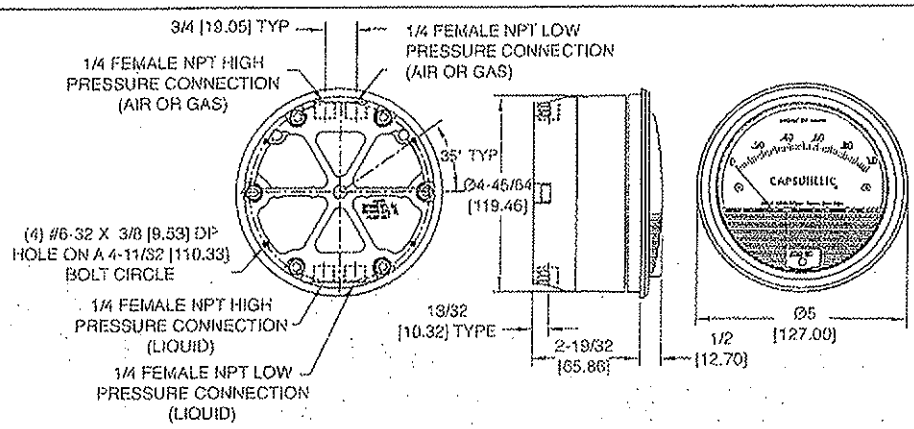

Dimensions, Series 4000 Capsuhelic® Pressure Gages.

The Capsuhelic® gage is designed to give fast, accurate indication of differential pressures. The gage may be used as a read-out device when measuring flowing fluids, pressure drop across filters, liquid levels in storage tanks and many other applications involving pressure, vacuum or differential pressure.

Using the basic design of Dwyer's time-proven Magnehelic® gage, the Capsuhelic® gage contains a simple, frictionless movement that permits full scale readings as low as 0.5 inch water column. The pressure being measured is held within a capsule which is an integral part of the gage. This containment of the pressure permits the use of the gage on system pressures of up to 500 psig, even when differentials to be read are less than 0.1 inch w.c.

The diaphragm-actuated Capsuhelic® gage requires no filling liquid which might limit its outdoor applications. Zero and range adjustments are made from outside the gage, and there is no need to disassemble the gage in normal service.

Note: May be used with hydrogen where pressures are less than 35 psi.

SPECIFICATIONS

Service: Aluminum Case: Air and compatible gases and oil based liquids. Brass Case: Air and compatible gases and water based liquids.
Wetted Materials: Consult factory.
Housing: Die cast aluminum with impregnated hard coating, standard. Optional forged brass housing is required for water or water based fluids. Special material diaphragms available, contact factory.
Accuracy: ±3% of full scale at 70°F (21.1°C). (±2% on 4000S models, ±4% on 4200, 4210, 4215, 4220, 4300, 4400, and 4500).
Pressure Limits: -20" Hg to 500 psig. (-0.677 bar to 34.4 bar).
Temperature Limits: 20 to 200°F (-6.67 to 93.3°C).
Size: 4" (101.6 mm) diameter dial face.
Mounting Orientation: Diaphragm in vertical position. Consult factory for other position orientations.
Process Connections: 1/4" female NPT high and low pressure taps, duplicated - one pair top for air and gas, and one pair bottom for liquids.
Weight: 3 lb, 3 oz (1.45 kg) aluminum case; 7 lb, 13 oz (3.54 kg) brass case.
Standard Accessories: Two 1/4" NPT plugs for duplicate pressure taps, four flush mounting adapters with screws and four surface mounting screws.

MOUNTING

Capsuhelic® gages may be flush mounted in a panel or surface mounted. Hardware is included for either. For flush mounting, a 4⅛" diameter cutout in panel is required. Where high shock or vibration are problems, order optional A-496 Heavy Duty flush mount bracket. Optional A-610 kit provides simple means of attaching gage to 1½"-2" horizontal or vertical pipe. Installation is same as Magnehelic® gage shown on page 4. All standard models are calibrated for vertical mounting. Gages with ranges above 5 in. w.c. can be factory calibrated for horizontal or inclined mounting on special order.

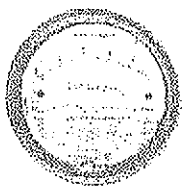

Flush mounted in panel.

Back view shows flush mounting adapters.

Back view for surface mounting.

OPTIONS AND ACCESSORIES

Adjustable Signal Flag — Integral with plastic gage cover; has external reset screw. May be ordered factory installed on gage or separately for field installation. Specify ASF suffix after model number.

A-314 Bleed Fitting — For easier, safer purging of trapped air when using gage with liquids. Also useful for draining condensate when installed in lower ports. To open, simply loosen nex nut. Solid brass.

Forged Brass Case — For applications involving water or water based liquids. To order, add suffix "B" after model number. Example: 4205B.

Transparent Scale Overlays — Available in bright red, green or yellow to accent critical pressure zones. Specify which color and portion of scale to be covered with each.

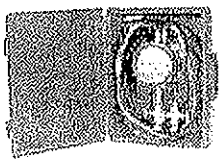

A-471 Portable Kit — Includes plastic case, mounting bracket, A-309 3-way manifold valve, (2) A-230 high pressure hoses and all necessary fittings. Assembly required. Gage not included.

Straightforward design assures maintenance-free performance

Top low pressure connection *(for Air or Gas)* connects to chamber in back of diaphragm. High pressure air or gas port (cut away; not shown) connects with chamber in front of diaphragm through passageways in case.

Precision made case is offered in two materials. Standard is die cast aluminum coated inside for resistance to most oils and similar fluids. Optional forged brass case is recommended when using water or water based liquids. One case size for all pressure ranges — can be either surface or flush mounted.

Silicone rubber diaphragm with integrally molded O-ring is sealed between the case and backplate. Diaphragm motion is restricted to prevent damage due to over-pressure.

Diaphragm support plate of stainless steel minimizes position or attitude sensitivity.

Calibrated range spring is a flat leaf of nickel plated spring steel. Small amplitude of motion assures consistency and long life. It reacts to pressure on diaphragm. Live length factory adjusted for calibration.

Bottom high pressure connection *(for Liquids)* connects to chamber in front of diaphragm. Low pressure liquid connection (not visible) connects with chamber in back of diaphragm through passageways in case.

Range spring calibration is set by custom camlock. Rate adjust and rate adjust lock are coaxial and are factory set and sealed.

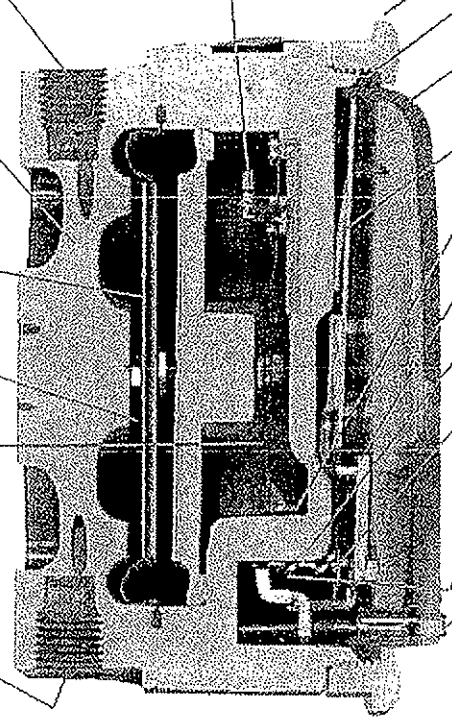

Bezel provides flange for flush mounting in panel.

O-ring seal for cover assures dust tight integrity of case.

Clear plastic front cover is highly resistant to breakage. Provides undistorted viewing of pointer and scale.

Precision scale, screen printed on aluminum, is accurate and easy to read.

Samarium cobalt magnet mounted at end of range spring rotates helix without mechanical linkages.

"Wishbone" assembly provides mounting for helix, helix bearings and pointer shaft.

Thin wall magnetic "window" is well braced and of minimum area for maximum pressure capability.

Jeweled bearings for helix are shock resistant mounted. They provide virtually friction-free rotation for helix. Rotation is damped with high viscosity silicone fluid.

Helix is precision milled from an alloy of high magnetic permeability, mounted in jeweled bearings, and rotates to align with magnetic field of magnet and transmit pressure indication to pointer.

Zero adjustment screw is conveniently located in plastic cover, accessible without removing cover. "O" ring seal provides dust seal.

Patent Nos. 4,011,759
4,030,365

SERIES 4000 CAPSUHELIC® GAGE

Scales reading directly in flow, heights, etc., are also available.

Model Number	Range, Inches of Water
*4000-0	0-.50
*4001	0-1.0
*4002	0-2.0
*4003	0-3.0
*4004	0-4.0
*4005	0-5.0
4006	0-6.0
4008	0-8.0
4010	0-10
4015	0-15
4020	0-20
4025	0-25
4030	0-30
4040	0-40
4050	0-50
4060	0-60
4080	0-80
4100	0-100
4150	0-150
4200	0-200
4300	0-300
4400	0-400
4500	0-500

Model Number	Range Feet of Water
4616B	0-16
4635B	0-35

Available with brass case only

Model Number	Range Zero Center Inches of Water
*4302	1-0-1
*4304	2-0-2
4310	5-0-5
4320	10-0-10
4330	15-0-15

Model Number	Range PSI
4201	0-1
4202	0-2
4203	0-3
4204	0-4
4205	0-5
4210	0-10
4215	0-15
4220	0-20
14230S	0-30
14240S	0-40
14260S	0-60
14280S	0-80
142100S	0-100
142200S	0-200
142300S	0-300

Model Number	Range MM of Water
*4000-25MM	0-25
*4000-50MM	0-50
*4000-80MM	0-80
*4000-100MM	0-100

Special Purpose Ranges

Scale No. 4401
Square Root
Specify Range

Scale No. 4402
Blank Scale
Specify Range

Model Number	Range, CM of Water
4000-15CM	0-15
4000-20CM	0-20
4000-25CM	0-25
4000-40CM	0-40
4000-50CM	0-50
4000-80CM	0-80
4000-100CM	0-100
4000-150CM	0-150
4000-200CM	0-200
4000-250CM	0-250
4000-300CM	0-300

Zero Center Ranges

*4300-4CM	2-0-2
*4300-10CM	5-0-5
4300-30CM	15-0-15

Model Number	Range, Pascals
*4000-125PA	0-125
*4000-250PA	0-250
*4000-500PA	0-500
*4000-750PA	0-750

Zero Center Ranges

*4300-500PA	250-0-250

Model Number	Range, Kilopascals
*4000-1KPA	0-1
4000-1.5KPA	0-1.5
4000-2KPA	0-2
4000-3KPA	0-3
4000-4KPA	0-4
4000-5KPA	0-5
4000-8KPA	0-8
4000-10KPA	0-10
4000-15KPA	0-15
4000-20KPA	0-20
4000-25KPA	0-25
4000-30KPA	0-30

Zero Center Ranges

*4300-1KPA	.5-0-.5
4300-3KPA	1.5-0-1.5

Accessories
A-298 Flat Flush Mounting Bracket
A-309 3-way Manifold Valve
A-314 Bleed Fitting
A-370 Mounting Bracket
A-471 Portable Kit
A-496 Flush Mount Bracket
A-610 Pipe Mount Kit

Options
Add Options as Suffix, Example 4001-ASF
-ASF (Adjustable Signal Flag)
B (Brass Case)
Scale Overlays - Red, Green, Mirrored or combination. Specify Locations

*These ranges available for vertical scale position only. †These ranges use Spiralelic® gage movement.

Ordering information

PMC71

This overview does not mark options which are mutually exclusive.

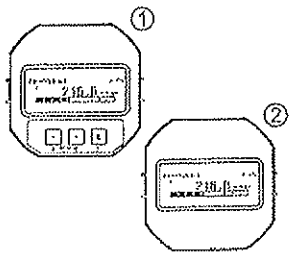

10	Approval:
A	For non-hazardous areas
1	ATEX II 1/2 G EEx ia IIC T6
6	ATEX II 1/2 G EEx ia IIC T6, overspill protection WHG
2	ATEX II 1/2 D EEx ia IIC T6
8	ATEX II 1 GD EEx ia IIC T6
3	ATEX II 1/2 GD EEx ia IIC T6
5	ATEX II 2 G EEx d[ia] IIC T6
7	ATEX II 3 G EEx nA II T6
S	FM IS, Class I, II, III Division 1, Groups A – G; NI Class I Division 2, Groups A – D; AEx ia
T	FM XP, Class I Division 1, Groups A – D; AEx d
R	FM NI, Class I, Division 2, Groups A – D
U	CSA IS, Class I, II, III Division 1, Groups A – G; Class I Division 2, Groups A – D, Ex ia
V	CSA XP, Class I Division 1, Groups B – D; Ex d
G	NEPSI Ex d[ia] IIC T4/T6
H	NEPSI Ex ia IIC T6
I	IECEx Zone 0/1 Ex ia IIC T6

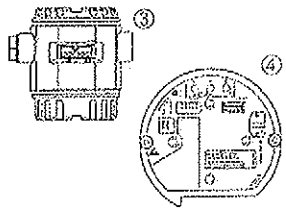

20	Output; Operation:
A	4...20 mA HART, operation outside, LCD (→ see Fig. ①, ③)
B	4...20 mA HART, operation inside, LCD (→ see Fig. ①, ④)
C	4...20 mA HART, operation inside (→ see Fig. ④)
M	PROFIBUS PA, operation outside, LCD (→ see Fig. ①, ③)
N	PROFIBUS PA, operation inside, LCD (→ see Fig. ①, ④)
O	PROFIBUS PA, operation inside (→ see Fig. ④)
P	FOUNDATION Fieldbus, operation outside, LCD (→ see Fig. ②, ③)
Q	FOUNDATION Fieldbus, operation inside, LCD (→ see Fig. ②, ④)
R	FOUNDATION Fieldbus, operation inside (→ see Fig. ④)

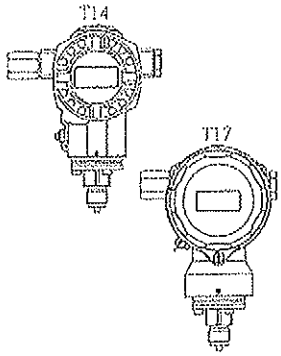

30	Housing; Cable entry; Protection:
A	Aluminum T14 housing, optional display on the side, IP 66/67/NEMA 4X/ 6P, Gland M 20x1,5
B	Aluminum T14 housing, optional display on the side, IP 66/67/NEMA 4X/ 6P, Thread G 1/2
C	Aluminum T14 housing, optional display on the side, IP 66/67/NEMA 4X/ 6P, Thread 1/2 NPT
D	Aluminum T14 housing, optional display on the side, IP 66/67/NEMA 4X/ 6P, M 12x1 PA plug
E	Aluminum T14 housing, optional display on the side, IP 66/67/NEMA 4X/ 6P, 7/8" FF plug
F	Aluminum T14 housing, optional display on the side, IP 65/NEMA 4X, Hand 7D plug 90°
1	AISI 316L T14 housing, optional display on the side, IP 66/67/NEMA 4X/ 6P, Gland M 20x1,5
2	AISI 316L T14 housing, optional display on the side, IP 66/67/NEMA 4X/ 6P, Thread G 1/2
3	AISI 316L T14 housing, optional display on the side, IP 66/67/NEMA 4X/ 6P, Thread 1/2 NPT
4	AISI 316L T14 housing, optional display on the side, IP 66/67/NEMA 4X/ 6P, M 12x1 PA plug
5	AISI 316L T14 housing, optional display on the side, IP 66/67/NEMA 4X/ 6P, 7/8" FF plug
6	AISI 316L T14 housing, optional display on the side, IP 65/NEMA 4X, Hand 7D plug 90°
P	AISI 316L T17 housing, optional display on the side, IP 66/68/NEMA 4X/ 6P, Gland M 20x1,5
S	AISI 316L T17 housing, optional display on the side, IP 66/68/NEMA 4X/ 6P, Thread G 1/2
T	AISI 316L T17 housing, optional display on the side, IP 66/68/NEMA 4X/ 6P, Thread 1/2 NPT
U	AISI 316L T17 housing, optional display on the side, IP 66/68/NEMA 4X/ 6P, M 12x1 PA plug
V	AISI 316L T17 housing, optional display on the side, IP 66/68/NEMA 4X/ 6P, 7/8" FF plug

PMC71										order code

→ For continuation of ordering information for PMC71, see the following page.

PMC71 (continued)

40 — Sensor range; Sensor overload limit (= OPL):

Sensors for gauge pressure

Measurement limits: −100 % (−1 bar)...+100 % of sensor nominal range

	Sensor nominal value (URL)	OPL (Over pressure limit)
1C	100 mbar/10 kPa/1.5 psi g PIT-311	4 bar/400 kPa/60 psi g
1E	250 mbar/25 kPa/3.75 psi g	5 bar/500 kPa/75 psi g
1F	400 mbar/40 kPa/6 psi g	8 bar/800 kPa/120 psi g
1H	1 bar/100 kPa/15 psi g PIT-351	10 bar/1 MPa/150 psi g
1K	2 bar/200 kPa/30 psi g	18 bar/1,8 MPa/270 psi g
1M	4 bar/400 kPa/60 psi g	25 bar/2,5 MPa/375 psi g
1P	10 bar/1 MPa/150 psi g	40 bar/4 MPa/600 psi g
1S	40 bar/4 MPa/600 psi g	60 bar/6 MPa/900 psi g

Sensors for absolute pressure

	Sensor nominal value (URL)	OPL (Over pressure limit)
2C	100 mbar/10 kPa/1.5 psi abs	4 bar/400 kPa/60 psi abs
2E	250 mbar/25 kPa/3.75 psi abs	5 bar/500 kPa/75 psi abs
2F	400 mbar/40 kPa/6 psi abs	8 bar/800 kPa/120 psi abs
2H	1 bar/100 kPa/15 psi abs	10 bar/1 MPa/150 psi abs
2K	2 bar/200 kPa/30 psi abs	18 bar/1,8 MPa/270 psi abs
2M	4 bar/400 kPa/60 psi abs	25 bar/2,5 MPa/375 psi abs
2P	10 bar/1 MPa/150 psi abs	40 bar/4 MPa/600 psi abs
2S	40 bar/4 MPa/600 psi abs	60 bar/6 MPa/900 psi abs

50 — Calibration; Unit:

1	Sensor range; mbar/bar
2	Sensor range; kPa/MPa
3	Sensor range; mmH_2O/mH_2O
4	Sensor range; mH_2O/ftH_2O
6	Sensor range; psi
B	Customised; see additional specification
C	Factory certificate 5-point; see additional specification
D	DKD certificate; see additional specification
K	Platinum; see additional specification
L	Platinum and factory certificate 5-point; see additional specification
M	Platinum and DKD certificate; see additional specification

70 — Process connection; Material:

	Thread, internal diaphragm
GA	Thread ISO 228 G 1/2 A EN 837, AISI 316L (CRN)
GB	Thread ISO 228 G 1/2 A EN 837, Alloy C (CRN)
GC	Thread ISO 228 G 1/2 A EN 837, Monel
GD	Thread ISO 228 G 1/2 A EN 837, PVDF (max. 15 bar/225 psi, −10...+60°C/+14...+140°F)
GE	Thread ISO 228 G 1/2 A G 1/4 (female), AISI 316L (CRN)
GF	Thread ISO 228 G 1/2 A G 1/4 (female), Alloy C (CRN)
GG	Thread ISO 228 G 1/2 A G 1/4 (female), Monel
GH	Thread ISO 228 G 1/2 A hole 11.4 mm, AISI 316L (CRN)
GJ	Thread ISO 228 G 1/2 A hole 11.4 mm, Alloy C (CRN)
GK	Thread ISO 228 G 1/2 A hole 11.4 mm, Monel
RA	Thread ANSI 1/2 MNPT 1/4 FNPT, AISI 316L (CRN)
RB	Thread ANSI 1/2 MNPT 1/4 FNPT, Alloy C (CRN)
RC	Thread ANSI 1/2 MNPT 1/4 FNPT, Monel
RD	Thread ANSI 1/2 MNPT, hole 11.4 mm, AISI 316L (CRN)
RE	Thread ANSI 1/2 MNPT, hole 11.4 mm, Alloy C (CRN)
RF	Thread ANSI 1/2 MNPT, hole 11.4 mm, Monel
RG	Thread ANSI 1/2 MNPT hole 3 mm, PVDF (max. 15 bar/225 psi, −10...+60°C/+14...+140°F)
RH	Thread ANSI 1/2 FNPT, AISI 316L (CRN)
RJ	Thread ANSI 1/2 FNPT, Alloy C (CRN)
RK	Thread ANSI 1/2 FNPT, Monel
GL	Thread JIS B0202 G 1/2 (male), AISI 316L
RL	Thread JIS B0203 R 1/2 (male), AISI 316L
GP	Thread DIN 13 M 20x1.5 EN 837 hole 3 mm, AISI 316L
GQ	Thread DIN 13 M 20x1.5 EN 837 hole 3 mm, Alloy C

For continuation 'Process connection, Material' see next page.

PMC71										order code

→ For continuation of ordering information for PMC71, see the following page.

PMC71 (continued)

70		Process connection; Material (continued):
		Thread, flush-mounted diaphragm
	1G	Thread ISO 228 G 1 1/2 A, AISI 316L
	1H	Thread ISO 228 G 1 1/2 A, Alloy C
	1J	Thread ISO 228 G 1 1/2 A, Monel
	1K	Thread ISO 228 G 2 A, AISI 316L
	1L	Thread ISO 228 G 2 A, Alloy C
	1M	Thread ISO 228 G 2 A, Monel
	2D	Thread ANSI 1 1/2 MNPT, AISI 316L (CRN)
	2E	Thread ANSI 1 1/2 MNPT, Alloy C (CRN)
	2F	Thread ANSI 1 1/2 MNPT, Monel (CRN)
	2G	Thread ANSI 2 MNPT, AISI 316L (CRN)
	2H	Thread ANSI 2 MNPT, Alloy C
	2J	Thread ANSI 2 MNPT, Monel
	1R	Thread DIN 13 M 44x1.25, AISI 316L
	1S	Thread DIN 13 M 44x1.25, Alloy C
		EN/DIN flanges, flush-mounted diaphragm
	CP	DN 32 PN 10-40 B1, AISI 316L
	CQ	DN 40 PN 10-40 B1, AISI 316L
	BR	DN 50 PN 10-16 A, PVDF (max. 15 bar/150 psi, -10...+60°C/+14...+140°F)
	B3	DN 50 PN 10-40 B1, AISI 316L
	C3	DN 50 PN 63 B2, AISI 316L
	BS	DN 80 PN 10-16 A, PVDF (max. 15 bar/150 psi, -10...+60°C/+14...+140°F)
	B4	DN 80 PN 10-40 B1, AISI 316L
		ANSI flanges, flush-mounted diaphragm
	AE	1 1/2" 150 lbs RF, AISI 316/316L (CRN)
	AQ	1 1/2" 300 lbs RF, AISI 316/316L (CRN)
	AF	2" 150 lbs RF, AISI 316/316L (CRN)
	JR	2" 150 lbs RF, AISI 316L with ECTFE-coating
	A3	2" 150 lbs RF, PVDF (max. 15 bar/225 psi, -10...+60°C/+14...+140°F)
	AR	2" 300 lbs RF, AISI 316/316L (CRN)
	AG	3" 150 lbs RF, AISI 316/316L (CRN)
	JS	3" 150 lbs RF, AISI 316L with ECTFE-coating
	A4	3" 150 lbs RF, PVDF (max. 15 bar/225 psi, -10...+60°C/+14...+140°F)
	AS	3" 300 lbs RF, AISI 316/316L (CRN)
	AH	4" 150 lbs RF, AISI 316/316L (CRN)
	JT	4" 150 lbs RF, AISI 316L with ECTFE-coating
	AT	4" 300 lbs RF, AISI 316/316L (CRN)
		JIS flanges, flush-mounted diaphragm
	KF	10K 50A RF, AISI 316L
	KL	10K 80A RF, AISI 316L
	KH	10K 100A RF, AISI 316L
		Hygienic connections, flush-mounted diaphragm
	MP	DIN 11851 DN 40 PN 25, AISI 316L, 3A with HNBR/EPDM seal (CRN)
	MR	DIN 11851 DN 50 PN 25, AISI 316L, 3A with HNBR/EPDM seal (CRN)
	TD	Tri-Clamp ISO 2852 DN 51 (2"), AISI 316L, 3A with HNBR/EPDM seal (CRN)
	TF	Tri-Clamp ISO 2852 DN 76.1 (3"), AISI 316L, 3A with HNBR/EPDM seal (CRN)
	TK	DRD DN50 (65 mm), PN 25, AISI 316L, 3A with HNBR/EPDM seal
	TR	Varivent type N for tubes DN 40 – DN 162, PN 40, AISI 316L, 3A with HNBR/EPDM seal (CRN)
80		Seal:
	A	FKM Viton
	B	EPDM
	D	Kalrez
	E	Chemraz
	F	NBR/3A: HNBR (FDA)
	L	FKM Viton, cleaned for silicone-free service
	M	Kalrez, cleaned for silicone-free service
	1	FKM Viton, cleaned from oil and grease
	2	FKM Viton, oxygen service Note application limits pressure/temp.

PMC71		order code

→ For continuation of ordering information for PMC71, see the following page.

PMC71 (continued)

100		**Additional option 1:**
	A	not selected
	E	SIL3/IEC 61508 Declaration of conformity
	T	High temperature version
	B	Material test certificate for wetted parts, inspection certificate as per EN 10204 3.1 acc. to specification 52005759
	M	Overvoltage protection
	N	HistoROM/M-DAT
	S	GL (German Lloyd)/ABS marine certificate
	V	Mounting on shut-off valve from above
	2	Test report acc. to EN 10204 2.2
	3	Routine test with certificate, inspection certificate as per EN 10204 3.1
	4	Overpressure test with certificate, inspection certificate as per EN 10204 3.1

110		**Additional option 2:**
	A	not selected
	E	SIL3/IEC 61508 Declaration of conformity
	G	Remote housing, cable length see additional spec. + mounting bracket, wall/pipe, 316L
	T	High temperature version
	M	Overvoltage protection
	N	HistoROM/M-DAT
	S	GL (German Lloyd)/ABS marine certificate
	U	Mounting bracket for wall/pipe, AISI 304
	2	Test report acc. to EN 10204 2.2
	3	Routine test with certificate, inspection certificate as per EN 10204 3.1
	4	Overpressure test with certificate, inspection certificate as per EN 10204 3.1
	5	Helium leak test EN 1518 with test certificate, inspection certificate as per EN 10204 3.1

PMC71	complete order code

Level | Pressure | Flow | Temperature | Liquid Analysis | Registration | Systems Components | Services | Solutions

Technical Information

Cerabar S (PMC71), PMP71, PMP75

Gauge and absolute pressure with ceramic and monosilicon sensors
High accuracy with excellent long-term stability
HART®, PROFIBUS PA® or FOUNDATION™ Fieldbus protocols

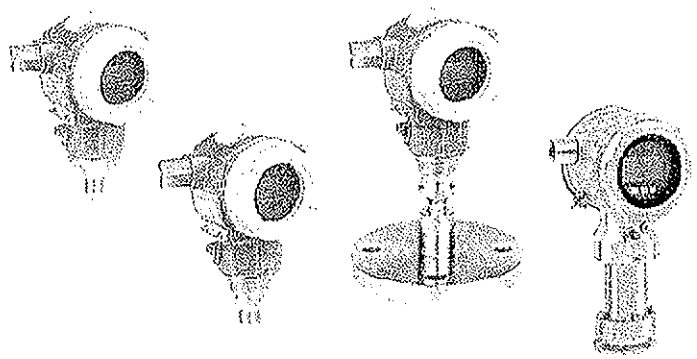

Application

The Cerabar S pressure transmitters are suitable for:
- Gauge and absolute pressure measurement in gases, liquids or steam, in all areas of process engineering
- Level, volume or mass measurement in liquids
- Corrosive or abrasive applications using unique ceramic sensor technology (PMC71)
- High process temperatures up to 752°F (400°C) with remote diaphragm seals (PMP75); without remote, up to 302°F (150°C)
- High pressure applications up to 10,150 psi (700 bar), PMP71
- International usage thanks to a wide range of approvals

Your benefits

Top of the line technical specifications
- High long-term stability (0.05% of URL/year)
- High reference accuracy: up to ±0.075%, optional PLATINUM version: ±0.05%
- Turn down 100:1, higher on request

Designed with safety in mind to keep your plant, equipment and personnel safe:
- Meets PED (Pressure Equipment Directive)
- SIL3 certified according to IEC 61508 by TÜV SÜD
- Electronic function-monitoring of the measuring cell provides alert should sensor fail
- HistoROM®/M-DAT memory module
  - quick duplication of measuring points
  - process monitoring via periodic recording of pressure and temperature values
  - monitoring of events and configuration changes
- Built-in diagnostic software functionality (e.g., user-defined max/min operating window)
- Secondary seals standard in every transmitter
- Modularity for easy, cost-effective repair
  - replaceable display
  - universal electronics for pressure and differential pressure
- Quick setup menu for standard application modes including pressure, level or flow
- Easy and safe menu-guided operation for quick setup via 4 to 20 mA with HART, Profibus PA or FOUNDATION Fieldbus
- On-board push buttons (external, or inside housing)
- Extensive diagnostic functions
- Optional FM and CSA certificates, plus combination certificates
- Ceramic diaphragm biological reactivity tested per USP Class VI

TI038P/24/en/07.05

Endress+Hauser

People for Process Automation

Table of contents

Function and system design 4
Device selection 4
Overview of diaphragm seal for PMP75 5
Measuring principle 7
Level measurement (level, volume and mass) 8
Communication protocol 8

Human interface 9
Local display (optional) 9
Operating elements 10
HistoROM®/M-DAT (optional) 11
Functional Safety SIL/IEC 61508 Declaration of conformity (optional) 11
Local operation 11
Handheld terminals – HART 11
Handheld terminal DXR375 – FOUNDATION Fieldbus 11
FieldCare 12
Remote operation – FOUNDATION Fieldbus 12
Commubox FXA291 12
ToF Adapter FXA291 12

Input 13
Measured variable 13
Measuring range 13
Explanation of terms 15

Output 16
Output signal 16
Signal range – 4...20 mA HART 16
Signal on alarm 16
Load – 4...20 mA HART 17
Resolution 17
Dynamic behavior current output 17
Dynamic behavior HART 17
Dynamic behavior PROFIBUS PA 18
Dynamic behavior FOUNDATION Fieldbus 18
Damping 18

Power supply 19
Electrical connection 19
Supply voltage 21
Current consumption 21
Cable entry 21
Cable specification 21
Residual ripple 21
Influence of power supply 21

Performance characteristics – general 22
Reference operating conditions 22
Uncertainty of measurement for small absolute pressure ranges . . 22
Long-term stability 22
Influence of the installation position 22

Performance characteristics – ceramic diaphragm . . . 23
Reference accuracy – PMC71 23
Total performance – PMC71 23
Total Error – PMC71 23
Warm-up period – PMC71 23
Thermal change of the zero output and the output span – PMC71 24

Performance characteristics – metallic diaphragm . . . 25
Reference accuracy – PMP71, PMP75 25
Total performance – PMP71 25
Total Error – PMP71 26
Warm-up period – PMP71, PMP75 26
Thermal change of the zero output and the output span – PMP71 and PMP75 26

Operating conditions (installation) 27
General installation instructions 27
Installation instructions for devices without diaphragm seal – PMC71 and PMP71 27
Heat insulation – PMC71 high temperature version and PMP75 . 27
Mounting with temperature isolator 28
Wall and pipe-mounting 28
Remote housing version 29
Rotating the housing 29
Oxygen applications 30
LABS-free applications 30
Ultra pure gas applications 30
Diaphragm seals for materials with hydrogen build-up (Gold-Rhodium coating) 30

Operating conditions (environment) 31
Ambient temperature limits 31
Storage temperature range 31
Degree of protection 31
Climate class 31
Vibration resistance 31
Electromagnetic compatibility 32
Overvoltage protection 32

Operating conditions (Process) 32
Process temperature limits 32
Process temperature range, seals 33
Pressure specifications 33

Mechanical construction 34
Housing dimensions T14 34
Housing dimensions T17 34
Process connections PMC71 (with ceramic measuring diaphragm) 35
Process connections PMP71 (with metallic measuring diaphragm) 42
PMP75 Basic unit 49
Process connections PMP75 (with metallic measuring diaphragm) 49
Remote housing version 62
Weight 63
Material 63

Planning instructions, diaphragm seal systems 65
Applications 65

Planning instructions 65
Diaphragm seal filling oils 66
Influence of the temperature on the zero point 66
Ambient temperature range 70
Installation instructions 70

Certificates and approvals 72
CE mark 72
Ex approvals 72
Suitability for hygenic processes 72
Marine certificate 72
Overspill protection 72
CRN approvals 72
Pressure Equipment Directive (PED) 72
Standards and guidelines 73

Ordering information 74
PMC71 74
PMC71 (continued) 75
PMC71 (continued) 76
PMC71 (continued) 77
PMP71 78
PMP71 (continued) 79
PMP71 (continued) 80
PMP71 (continued) 81
PMP75 82
PMP75 (continued) 83
PMP75 (continued) 84
PMP75 (continued) 85
PMP75 (continued) 86

Additional documentation 86
Innovation 86
Field of Activities 86
Technical Information 86
Operating Instructions 86
Brief operating instructions 86
Manual for Functional Safety (SIL) 86
Safety Instructions 86
Installation/Control Drawings 87
Overspill protection 87

Accessories 87
Block and bleed valves 87

Function and system design

Device selection

Cerabar S – Product family	PMC71	PMP71	PMP75
	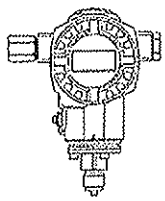 With capacitive measuring cell and ceramic measuring diaphragm (Ceraphire®)	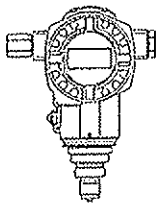 With piezoresistive measuring cell and metallic welded diaphragm	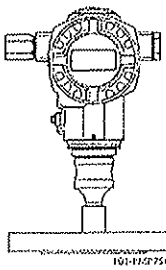 With diaphragm seal
Field of application	– Gauge pressure and absolute pressure – Level	– Gauge pressure and absolute pressure – Level	– Gauge pressure and absolute pressure – Level
Process connections	– Diverse thread – DN 32 – DN 80 – ANSI 1 1/2" – 4" – JIS 50 A – 100 A	– Diverse thread – DN 25 – DN 80 – ANSI 1 1/2" – 4" – JIS 25 A – 100 A – Oval flange adapter – Prepared for diaphragm seal mount	– Wide range of diaphragm seals, → see the following section "Overview of diaphragm seal for PMP 75"
Measuring ranges	from -100/0 to 100 mbar (-1.5/0 to 1.5 psi) to -1/0 to 40 bar (-14.5/0 to 600 psi)	from -100/0 to 100 mbar (-1.5/0 to 1.5 psi) to -1/0 to 700 bar (-14.5 to 10,150 psi)	from -400/0 to 400 mbar (-6/0 to 6 psi) to -1/0 to 400 bar (-14.5 to 6000 psi)
OPL [1]	max. 60 bar (870 psi)	max. 1050 bar (15,200 psi)	max. 600 bar (8700 psi)
Process temp. range	-25 to +125°C/-20 to +150°C [2] (-13 to +257°F/-4 to +302°F)	-40 to +125°C (-40 to +257°F)	-70 to 400°C (-94 to +752°F)
Ambient temp. range	-40 to +85°C (-40 to +185°F)	-40 to +85°C (-40 to +185°F) [3]	-40 to +85°C (-40 to +185°F)
Ambient temperature range remote housing	-40 to +60°C (-40 to +140°F)		
Reference accuracy	– Up to ±0.075% of the set span – PLATINUM version: up to ±0.05% of the set span		Up to ±0.075% of the set span
Supply voltage	– For non-hazardous areas: 10.5 to 45 V DC – EEx ia (intrinsically safe): 10.5 to 30 V DC		
Output	4 to 20 mA with superimposed HART protocol, PROFIBUS PA, FOUNDATION Fieldbus		
Options	– PMP71, PMP75: Gold-Rhodium-coated diaphragm – PMP71, PMP75: NACE-compliant materials – PMC71, PMP71, PMP75: inspection certificate 3.1 – HistoROM®/M-DAT memory module – Remote housing		
Specialities	– Metal-free measurement with PVDF connection – Cleaning of the transmitter for the use in paint shops	– Oil volume-minimised process connections – gas-tight, elastomer-free	– Wide range of diaphragm seals – For high media temperatures – Oil volume-minimised process connections – Completely welded versions

1) OPL = Over pressure limit; dependent on the lowest-rated element, with regard to pressure, of the selected components

2) High temperature version "T" for feature 100 "Additional option 1" or for feature 110 "Additional option 2"

3) lower temperature on request

Overview of diaphragm seal for PMP75

Design	Diaphr. seal	Connection	Version	Standard	Nominal diameter	Nom. press./Class
Thread	Membrane diaphragm seal (MDM)	G		ISO 228	– G 1A – G 1 1/2 A – G 2A	700 bar (10,150 psi)
		NPT		ANSI	– 1 MNPT – 1 1/2 MNPT – 2 MNPT	700 bar (10,150 psi)
Tri-Clamp	Membrane diaphragm seal (MDM)	Clamp		ISO 2852	– DN 25 (1") – DN 38 (1-1/2") – DN 51 (2") – DN 76.1 (3")	Dependent on the clamp used
	Pipe diaphragm seal (RDM)	Clamp		ISO 2852	– DN 25 (1") – DN 38 (1-1/2") – DN 51 (2")	Dependent on the clamp used
Hygienic connections	Membrane diaphragm seal (MDM)	Varivent (EHEDG and 3-A approval)	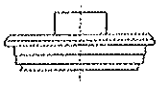		Type N for pipes DN 40 – DN 162	PN 40
		DRD	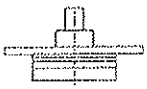		DN50 (65 mm)	PN 25
		Taper adapter with coupling nut	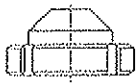	DIN 11851	– DN 50 – DN 65 – DN 80	PN 25
		Threaded adapter		DIN 11851	– DN 50 – DN 65 – DN 80	PN 25
Versions in conformity with ASME-BPE for use in biotechnical processes; wetted surfaces $R_a \leq 0.4$ µm (15.75 µin; 180 grit), electropolished	Membrane diaphragm seal (MDM)	Clamp		ISO 2852	– DN 25 (1 1/2") – DN 51 (2")	Dependent on the clamp used
		Varivent (EHEDG and 3-A approval)			– Type N for pipes DN 40 – DN 162	PN 40
Flange	Membrane diaphragm seal (MDM)	EN/DIN flange	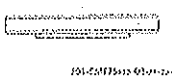	EN 1092-1/ DIN 2527 and DIN 2501-1	– DN 25, DN 50 – DN 32, DN 40 – DN 80 – DN 100	– up to PN 400 – PN 40 – up to PN 100 – PN 100
		ANSI flange		ANSI B 16.5	– 1", 2" – 1-1/2", 3", 4"	– 2500 lbs – 300 lbs
		JIS flange		B 2220 BL	25A, 50A, 80A, 100A	10 K
Flange with extended diaphragm seal	Membrane diaphragm seal (MDM)	EN/DIN flange	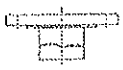	EN 1092-1/ DIN 2527	DN 50/DN 80 + 50/100/200 mm ext. diaphr. seal	PN 10 – PN 40
		ANSI flange		ANSI B 16.5	2"/3"/4" + 2"/4"/6"/8" ext. diaphr. seal	Up to 300 lbs

Design	Diaphr. seal	Connection	Version	Standard	Nominal diameter	Nom. press./Class
Threaded connection with separator	Membrane diaphragm seal (MDM)	G		ISO 228/ EN837	– G 1/2 B – G 1/2 A – G 1/2 A	– 40 bar – 160 bar – 400 bar
		NPT		ANSI	– 1/2" MNPT	– 40 bar (600 psi) – 160 bar (2320 psi) – 400 bar (6000 psi)
		NPT Off line thread		ANSI	– 1/2" FNPT – 1" FNPT	250 bar (3625 psi)

Measuring principle

Ceramic measuring diaphragm used for PMC71 (Ceraphire®)

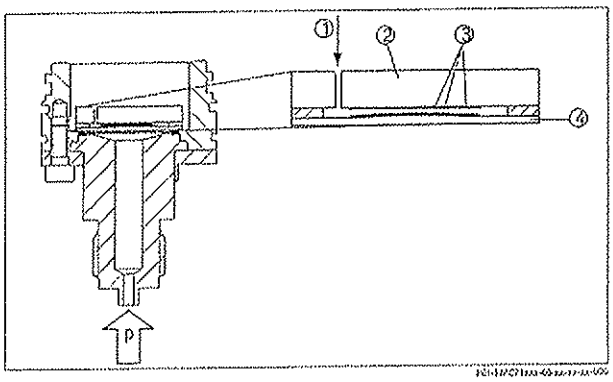

Ceramic sensor

1 Atmospheric vent (gauge pressure only)
2 Ceramic substrate
3 Electrodes
4 Ceramic diaphragm

Metallic measuring diaphragm used for PMP71 and PMP75

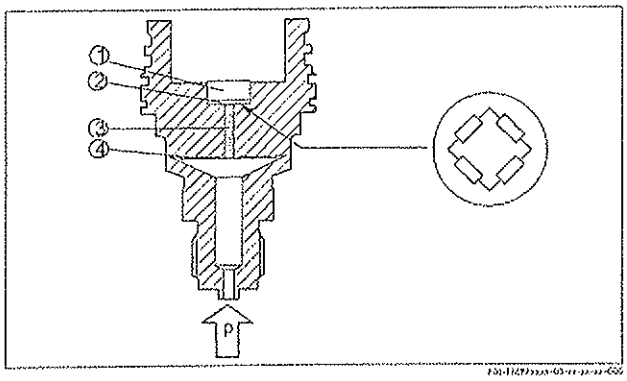

Metal sensor

1 Measuring element
2 Measuring diaphragm with Wheatstone bridge
3 Channel with fill fluid
4 Process diaphragm, Metal separating diaphragm

Ceramic measuring diaphragm used for PMC71 (Ceraphire®)

The ceramic sensor is a dry sensor, i.e. the process pressure acts directly on the robust ceramic diaphragm and deflects it. A pressure-dependent change in capacitance is measured at the electrodes of the ceramic carrier and the diaphragm. The measuring range is determined by the thickness of the ceramic diaphragm.

Advantages:
- Guaranteed overload resistance up to 40 times the nominal pressure
- Thanks to highly-pure 99.9% ceramic (Ceraphire®, see also "www.endress.com/ceraphire")
  - extremely high chemical resistance compared to Alloy
  - less relaxation
  - high mechanical stability
- Suitable for vacuums
- Second process barrier (Secondary Containment) for enhanced integrity
- Process temperature up to 150°C (302°F)

Metallic measuring diaphragm used for PMP71 and PMP75

PMP71

The operating pressure deflects the separating diaphragm and a fill fluid transfers the pressure to a resistance measuring bridge (semi-conductor technology). The pressure-dependent change of the bridge output voltage is measured and evaluated.

Advantages:
- Can be used with process pressures up to 700 bar (10,150 psi)
- High long-term stability
- Guaranteed overload resistance up to 4 times the nominal pressure
- Second process barrier (Secondary Containment) for enhanced integrity
- Significantly less thermal effect compared to diaphragm seal systems

PMP75

The operating pressure acts on the diaphragm of the diaphragm seal and is transferred to the separating diaphragm of the sensor by a diaphragm seal fill fluid. The separating diaphragm is deflected and a fill fluid transfers the pressure to a resistance measuring bridge. The pressure-dependent change of the bridge output voltage is measured and evaluated.

Advantages:
- Can be used with process pressures up to 400 bar (6000 psi)
- High long-term stability
- Guaranteed overload resistance up to 4 times the nominal pressure
- Second process barrier (Secondary Containment) for enhanced integrity

Level measurement (level, volume and mass)

Design and operation mode

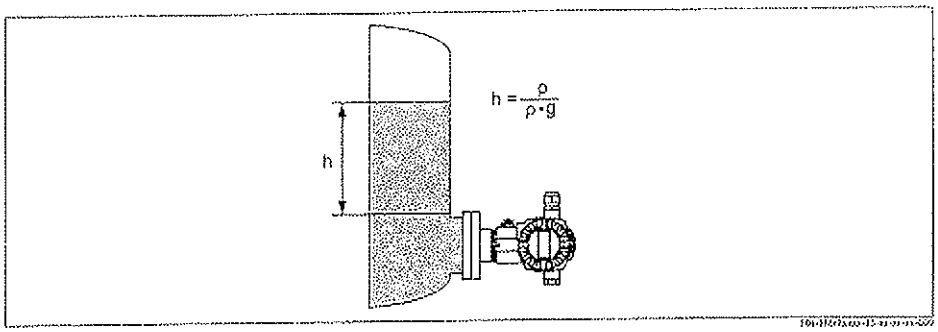

Level measurement with Cerabar S

- h Height (level)
- p Pressure
- ρ Density of the medium
- g Gravitation constant

Your benefits

- Choice of three level operating modes in the device software
- Volume and mass measurements in any tank shapes by means of a freely programmable characteristic curve
- Choice of diverse level units with automatic unit conversion
- A customised unit can be specified
- Has a wide range of uses, as well
  - in the event of foam formation
  - in tanks with agitators or screen fittings
  - in the event of liquid gases

Communication protocol

- 4 to 20 mA with HART communication protocol
- PROFIBUS PA
  - The Endress+Hauser devices meet the requirements as per the FISCO model.
  - Due to the low current consumption of 13 mA ± 1 mA
    - up to 7 Cerabar S for EEx ia, CSA IS and FM IS applications
    - up to 27 Cerabar S for all other applications, e.g. in non-hazardous areas, EEx nA, etc.

    can be operated at one bus segment with installation as per FISCO.

  Further information on PROFIBUS PA, such as requirements for bus system components, can be found in the Operating Instructions BA034S "PROFIBUS DP/PA: Guidelines for planning and commissioning" and in the PNO guideline.
- FOUNDATION Fieldbus
  - The Endress+Hauser devices meet the requirements as per the FISCO model.
  - Due to the low current consumption of 15 mA ± 1 mA
    - up to 6 Cerabar S for EEx ia, CSA IS and FM IS applications
    - up to 24 Cerabar S for all other applications, e.g. in non-hazardous areas, EEx nA, etc.

    can be operated at one bus segment with installation as per FISCO.

  Further information on FOUNDATION Fieldbus, such as requirements for bus system components can be found in the Operating Instructions BA013S "FOUNDATION Fieldbus Overview".

Human interface

Local display (optional)

A 4-line liquid crystal display (LCD) is used for display and operation. The local display shows measured values, dialog text as well as fault and notice messages in plain text, thereby supporting the user in every stage of operation.

4 to 20 mA HART and PROFIBUS PA

Functions:
- 8-digit measured value display including sign and decimal point, bar graph for 4 to 20 mA HART as current display or for PROFIBUS PA as graphical display of the scaled value of the AI Block
- Simple and complete menu guidance thanks to separation of the parameters into three levels
- Each parameter is given a 3-digit ID number for easy navigation.
- Option for configuring the display according to individual requirements and desires, such as language, alternating display, display of other measured values such as sensor temperature, contrast setting
- Comprehensive diagnostic functions (fault and warning message, peak-hold indicators, etc.)
- Rapid and safe commissioning with the Quick Setup menu

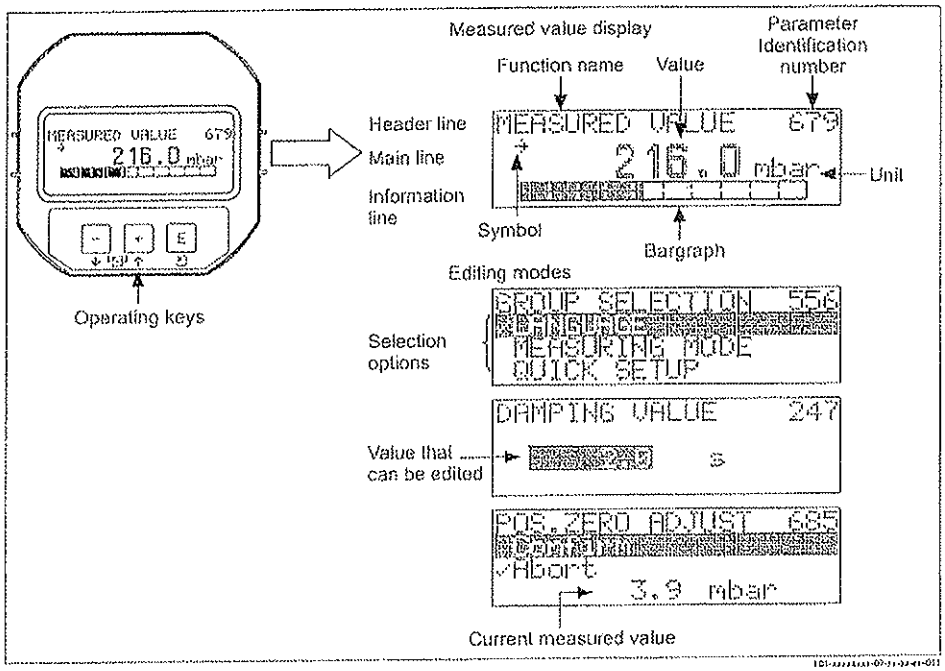

FOUNDATION Fieldbus

Functions:
- 8-digit measured value display including sign and decimal point, bargraph for current display
- Option for configuring the display according to individual requirements and desires, such as language, alternating display, display of other measured values such as sensor temperature, contrast setting
- Comprehensive diagnostic functions (fault and warning message)

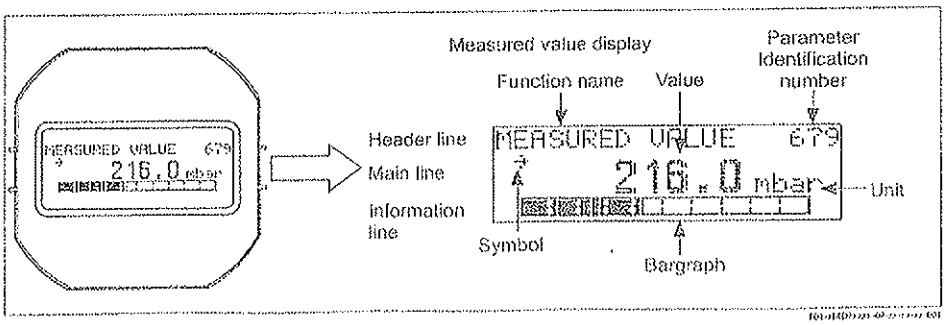

Operating elements

With regard to T14 housings, the operating keys are located either outside the device under the protection cap or inside on the electronic insert. In T17 housings, the operating keys are always located inside on the electronic insert.
In addition, devices with an on-site display and a 4 to 20 mA HART or PROFIBUS PA electronic insert have operating keys on the on-site display.

Operating keys on the exterior of the device

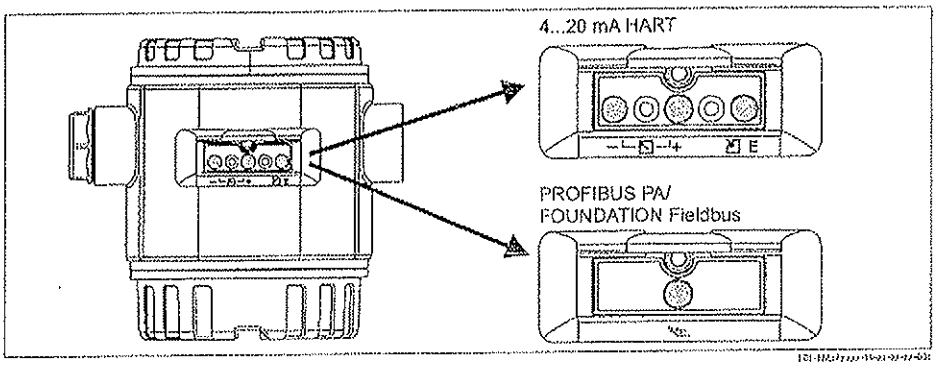

The operating keys located externally on the device work on the Hall sensor principle. As a result, no additional openings are required in the device. This guarantees:
- Complete protection against environmental influences such as moisture and contamination
- Simple operation without any tools
- No wear.

Operating keys and elements located internally on the electronic insert

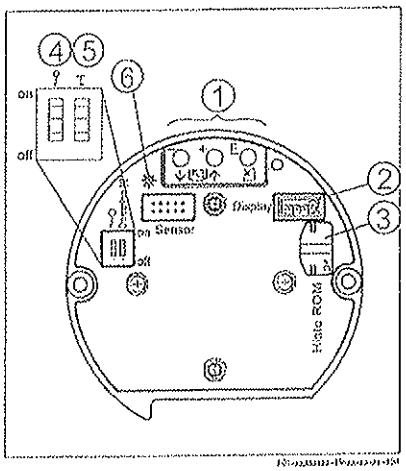

Electronic insert HART

1 Operating keys
2 Slot for optional display
3 Slot for optional HistoROM®/M-DAT
4 DIP-switch for locking/unlocking measured-value-relevant parameters
5 DIP-switch for damping on/off
6 Green LED to indicate value being accepted

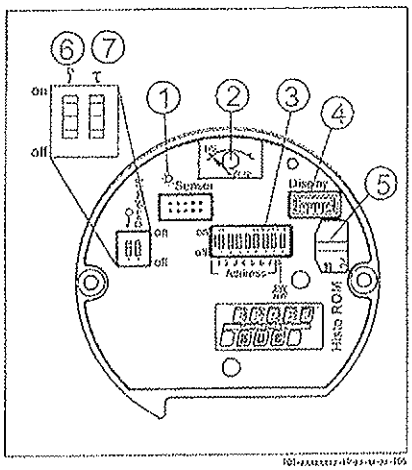

Electronic insert PROFIBUS PA

1 Green LED to indicate value being accepted
2 Key for position calibration and device reset
3 DIP-switch for bus address
4 Slot for optional display
5 Slot for optional HistoROM®/M-DAT
6 DIP-switch for locking/unlocking measured-value-relevant parameters
7 DIP-switch for damping on/off

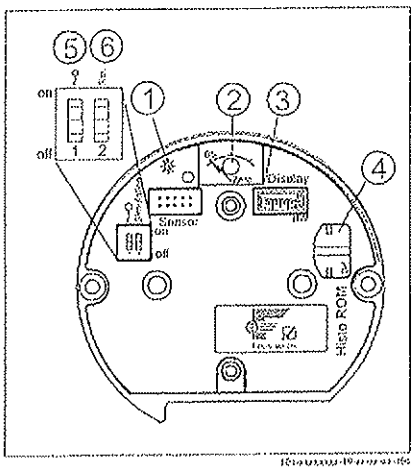

Electronic insert FOUNDATION Fieldbus

1 Green LED to indicate value being accepted
2 Key for position calibration
3 Slot for optional display
4 Slot for optional HistoROM®/M-DAT
5 DIP-switch for locking/unlocking measured-value-relevant parameters
6 DIP-switch for simulation mode on/off

HistoROM®/M-DAT (optional)	HistoROM®/M-DAT is a memory module, which is attached to the electronic insert. The HistoROM®/M-DAT can be retrofitted at any stage (Order number: 52027785). **Your benefits** ▪ Quick and safe commissioning of the same measuring points by copying the configuration data of one transmitter to another transmitter ▪ Reliable process monitoring thanks to cyclical recording of pressure and sensor temperature measured values ▪ Simple diagnosis by recording diverse events such as alarms, configuration changes, counters for measuring range undershoot and overshoot for pressure and temperature as well as user limit overshoot and undershoot for pressure and temperature etc. ▪ Analysis and graphic evaluation of the events and process parameters via software (contained in scope of supply). HistoROM®/M-DAT can be ordered via feature 100 "Additional options 1" or feature 110 "Additional options 2" or as spare parts. → See also page 74 ff. A CD with an Endress+Hauser operating program is also included in the scope of delivery. You can copy data from one transmitter to another transmitter when operating a FOUNDATION Fieldbus device via an FF configuration program. You need the Endress+Hauser ToF Tool operating program and the Commbox FXA291 service interface and the ToF Adapter FXA291 to be able to access the data and events saved in the HistoROM®/M-DAT.
Functional Safety SIL3/ IEC 61508 Declaration of conformity (optional)	The Cerabar S pressure transmitters with 4 to 20 mA output signal have been developed to IEC 61508 standard and have been certified by TÜV SÜD. These devices can be used for process pressure monitoring up to SIL3. → For a detailed description of the safety functions with Cerabar S, settings and characteristic quantities for functional safety, please refer to the "Functional Safety Manual - Cerabar S" SD190P. → For devices with SIL3/IEC 61508 declaration of conformity, see page 78 ff, Feature 100 "Additional option 1" and Feature 110 "Additional option 2", version E "SIL3/IEC 61508, Declaration of Conformity".
Local operation	**Functions 4 to 20 mA HART and PROFIBUS PA** ▪ With local display: navigate through the operating menu using three operating keys ▪ Without local display: – Position calibration (zero point correction) – Setting lower-range value and upper-range value – reference pressure present at device (HART only) – Value acceptance indicated by green LED ▪ Device reset ▪ Locking and unlocking measured-value-relevant parameters ▪ Switching damping on and off ▪ Setting bus address (PROFIBUS PA only) The display of the device can be turned in 90° steps. Depending on the installation position of the device, this makes it easy to operate the device and read the measured values. **Functions FOUNDATION Fieldbus** ▪ Position calibration (zero point correction) ▪ Value acceptance indicated by green LED ▪ Locking and unlocking measured-value-relevant parameters ▪ Switching simulation mode on and off
Handheld terminals – HART	With a handheld terminal, all the parameters can be configured anywhere along the 4 to 20 mA line via menu operation.
Handheld terminal DXR375 – FOUNDATION Fieldbus	With a handheld terminal DXR375, all the parameters can be configured via menu operation.

FieldCare	FieldCare is an Endress+Hauser asset management tool based on FDT technology. With FieldCare, you can configure all Endress+Hauser devices as well as devices from other manufacturers that support the FDT standard. The following operating systems are supported: WinNT4.0, Win2000 and Windows XP. FieldCare supports the following functions: ▪ Configuration of transmitters in offline and online operation ▪ Loading and saving device data (upload/download) ▪ HistoROM®/M-DAT analysis ▪ Documentation of the measuring point Connection options: ▪ HART via Commubox FXA191 and the RS 232 C serial interface of a computer ▪ HART via Commubox FXA195 and the USB port on a computer ▪ PROFIBUS PA via segment coupler and PROFIBUS interface card ▪ Service interface with adapter Commubox FXA291 and ToF Adapter FXA291 (USB).
Remote operation – FOUNDATION Fieldbus	An FF configuration program is required to integrate a device with "FOUNDATION Fieldbus signal" into an FF network or to set the FF-specific parameters. Please contact your local Endress+Hauser Sales Center for more information.
Commubox FXA291	The Commubox FXA291 connects Endress+Hauser field instruments with CDI interface (= Endress+Hauser Common Data Interface) to the USB interface of a personal computer or a notebook. For details refer to TI405C/07/en. Note! For the following Endress+Hauser instruments you need the "ToF Adapter FXA291" as an additional accessory: ▪ Cerabar S PMC71, PMP7x ▪ Deltabar S PMD7x, FMD7x ▪ Deltapilot S FMB70
ToF Adapter FXA291	The ToF Adapter FXA291 connects the Commubox FXA291 via the USB interface of a personal computer or a notebook. For details refer to KA271F/00/a2.

Input

Measured variable

Absolute pressure and gauge pressure, from which level (level, volume or mass) is derived

Measuring range

PMC71 – with ceramic measuring diaphragm (Ceraphire®) for gauge pressure

Nominal value	Measurement limit		Smallest calibratable Span [4]	MWP [1]	OPL [2]	Vacuum resistance	Order code [3]
	lower (LRL) bar (psi)	upper (URL) bar (psi)	bar (psi)	bar (psi)	bar (psi)	bar_{abs} (psia)	
100 mbar (1.5 psi)	-0.1 (-1.5)	+0.1 (1.5)	0.005 (0.07)	2.7 (39)	4 (60)	0.7 (10.1)	1C
250 mbar (4 psi)	-0.25 (-3.75)	+0.25 (3.75)	0.005 (0.07)	3.3 (48)	5 (80)	0.5 (7.3)	1E
400 mbar (6 psi)	-0.4 (-6)	+0.4 (6)	0.005 (0.07)	5.3 (77)	8 (120)	0	1F
1 bar (15 psi)	-1 (-15)	+1 (15)	0.01 (0.15)	6.7 (97)	10 (150)	0	1H
2 bar (30 psi)	-1 (-15)	+2 (30)	0.02 (0.30)	12 (174)	18 (260)	0	1K
4 bar (60 psi)	-1 (-15)	+4 (60)	0.04 (0.60)	16.7 (242)	25 (360)	0	1M
10 bar (150 psi)	-1 (-15)	+10 (150)	0.1 (1.5)	26.7 (387)	40 (600)	0	1P
40 bar (600 psi)	-1 (-15)	+40 (600)	0.4 (6)	40 (600)	60 (900)	0	1S

PMC71 – with ceramic measuring diaphragm (Ceraphire®) for absolute pressure

Nominal value	Measurement limit		Smallest calibratable Span [4]	MWP [1]	OPL [2]	Order code [3]
	lower (LRL) bar_{abs} (psia)	upper (URL) bar_{abs} (psia)	bar (psi)	bar_{abs} (psia)	bar_{abs} (psia)	
100 mbar (1.5 psi)	0	+0.1 (1.5)	0.005 (0.07)	2.7 (39)	4 (60)	2C
250 mbar (4 psi)	0	+0.25 (3.75)	0.005 (0.07)	3.3 (48)	5 (80)	2E
400 mbar (6 psi)	0	+0.4 (6)	0.005 (0.07)	5.3 (77)	8 (120)	2F
1 bar (15 psi)	0	+1 (15)	0.01 (0.15)	6.7 (97)	10 (150)	2H
2 bar (30 psi)	0	+2 (30)	0.02 (0.30)	12 (174)	18 (260)	2K
4 bar (60 psi)	0	+4 (60)	0.04 (0.60)	16.7 (242)	25 (360)	2M
10 bar (150 psi)	0	+10 (150)	0.1 (1.5)	26.7 (387)	40 (600)	2P
40 bar (600 psi)	0	+40 (600)	0.4 (6)	40 (600)	60 (900)	2S

1) The MWP (maximum working pressure) for the measuring device depends on the weakest element of the components selected with regard to pressure, i.e. the process connection (→ see page 35 ff) has to taken into consideration in addition to the sensor (→ see Table above). Pay attention to the pressure-temperature dependence also. For the appropriate standards and further information, see page 33, "Pressure specification".
2) OPL: Over Pressure Limit; depends on the weakest link in terms of pressure of the selected components.
3) Versions in the order code → See also page 75 ff, feature 40 "Sensor range; Sensor overload limit (= OPL)"
4) Turn down > 100:1 on request or can be set at the device

PMP71 and PMP75 – with metallic measuring diaphragm for gauge pressure

Nominal value	Measurement limits		Smallest calibratable Span [5]	MWP [1]	OPL [2]	Vacuum resistance [3]	Order code [4]
	lower (LRL)	upper (URL)				Silicone oil/Inert oil	
	bar (psi)	bar (psi)	bar (psi)	bar_{abs} (psia)	bar_{abs} (psia)	bar_{abs} (psia)	
100 mbar [6] (1.5 psi)	-0.1 (-6)	+0.1 (6)	0.005 (0.07)	2.7 (39)	4 (60)	0.01/0.04 (0.14/0.58)	1C
250 mbar [6] (4 psi)	-0.25 (-3.75)	+0.25 (3.75)	0.005 (0.07)	2.7 (39)	4 (60)	0.01/0.04 (0.14/0.58)	1E
400 mbar (6 psi)	-0.4 (-6)	+0.4 (6)	0.005 (0.07)	4 (60)	6 (90)	0.01/0.04 (0.14/0.58)	1F
1 bar (15 psi)	-1 (-15)	+1 (15)	0.01 (0.15)	6.7 (100)	10 (150)	0.01/0.04 (0.14/0.58)	1H
2 bar (30 psi)	-1 (-15)	+2 (30)	0.02 (0.30)	13.3 (200)	20 (300)	0.01/0.04 (0.14/0.58)	1K
4 bar (60 psi)	-1 (-15)	+4 (60)	0.04 (0.06)	18.7 (270)	28 (400)	0.01/0.04 (0.14/0.58)	1M
10 bar (150 psi)	-1 (-15)	+10 (150)	0.1 (1.5)	26.7 (400)	40 (600)	0.01/0.04 (0.14/0.58)	1P
40 bar (600 psi)	-1 (-15)	+40 (600)	0.4 (6)	100 (1500)	160 (2320)	0.01/0.04 (0.14/0.58)	1S
100 bar (1500 psi)	-1 (-15)	+100 (1500)	1.0 (15)	100 (1500)	400 (6000)	0.01/0.04 (0.14/0.58)	1U
400 bar (6000 psi)	-1 (-15)	+400 (6000)	4.0 (60)	400 (6000)	600 (8700)	0.01/0.04 (0.14/0.58)	1W
700 bar [6] (10,150 psi)	-1 (-15)	+700 (10,150)	7.0 (101)	700 (10,150)	1050 (15,230)	0.01/0.04 (0.14/0.58)	1X

PMP71 and PMP75 – with metallic measuring diaphragm for absolute pressure

Nominal value	Measurement limits		Smallest calibratable Span [5]	MWP [1]	OPL [2]	Vacuum resistance [3]	Order code [4]
	lower (LRL)	upper (URL)				Silicone oil/Inert oil	
	bar_{abs} (psia)	bar_{abs} (psia)	bar (psi)	bar_{abs} (psia)	bar_{abs} (psia)	bar_{abs} (psia)	
100 mbar [6] (1.5 psi)	0	+0.1 (6)	0.005 (0.07)	2.7 (39)	4 (60)	0.01/0.04 (0.14/0.58)	2C
250 mbar [6] (4 psi)	0	+0.25 (3.75)	0.005 (0.07)	2.7 (39)	4 (60)	0.01/0.04 (0.14/0.58)	2E
400 mbar (6 psi)	0	+0.4 (6)	0.005 (0.07)	4 (60)	6 (90)	0.01/0.04 (0.14/0.58)	2F
1 bar (15 psi)	0	+1 (15)	0.01 (0.15)	6.7 (100)	10 (150)	0.01/0.04 (0.14/0.58)	2H
2 bar (30 psi)	0	+2 (30)	0.02 (0.30)	13.3 (200)	20 (300)	0.01/0.04 (0.14/0.58)	2K
4 bar (60 psi)	0	+4 (60)	0.04 (0.06)	18.7 (270)	28 (400)	0.01/0.04 (0.14/0.58)	2M
10 bar (150 psi)	0	+10 (150)	0.1 (1.5)	26.7 (400)	40 (600)	0.01/0.04 (0.14/0.58)	2P
40 bar (600 psi)	0	+40 (600)	0.4 (6)	100 (1500)	160 (2320)	0.01/0.04 (0.14/0.58)	2S
100 bar (1500 psi)	0	+100 (1500)	1.0 (15)	100 (1500)	400 (6000)	0.01/0.04 (0.14/0.58)	2U
400 bar (6000 psi)	0	+400 (6000)	4.0 (60)	400 (6000)	600 (8700)	0.01/0.04 (0.14/0.58)	2W
700 bar [6] (10,150 psi)	0	+700 (10,150)	7.0 (101)	700 (10,150)	1050 (15,230)	0.01/0.04 (0.14/0.58)	2X

1) The MWP (maximum working pressure) for the measuring device depends on the weakest element of the components selected with regard to pressure, i.e. the process connection (→ see page 35 ff) has to taken into consideration in addition to the sensor (→ see Table above). Pay attention to the pressure-temperature dependence also. Pay attention to the pressure-temperature dependence also. For the appropriate standards and further information, see Page 33, "Pressure specification".
2) OPL: Over pressure limit (= Sensor overload limit)
3) The vacuum resistance applies to the measuring cell at a reference conditions. The pressure and temperature application limits of the selected filling oil must also be observed for the PMP75. → See also page 66, section "Diaphragm seal filling oils".
4) Versions in the order code → See also page 74 ff, feature 40 "Sensor range; Sensor Overload limit (= OPL)"
5) Turn down > 100:1 on request or can be set at the device
6) PMP71 only, PMP75 on request

Explanation of terms

Explanation of terms: Turn down (TD), set span and on zero based span

Case 1:
- |Lower range value (LRV)| ≤ |Upper range value (URV)|

Example:
- Lower range value (LRV) = 0 bar
- Upper range value (URV) = 0.5 bar (7 psi)
- Nominal value (URL) = 1 bar (14.5 psi)

Turn down:
- TD = URL / |URV| = 2:1

set span:
- URV – LRV = 0.5 bar (7 psi)
  This span is based on the zero point.

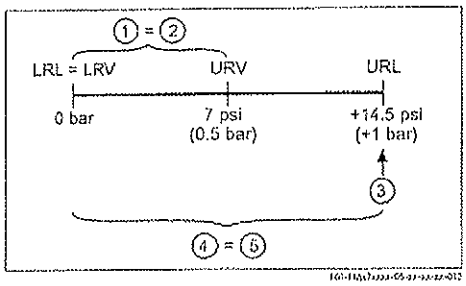

Example: 1 bar (15 psi) measuring cell

Case 2:
- |Lower range value (LRV)| ≤ |Upper range value (URV)|

Example:
- Lower range value (LRV) = 0 bar
- Upper range value (URV) = 0.5 bar (7 psi)
- Nominal value (URL) = 1 bar (14.5 psi)

Turn down:
- TD = URL / |URV| = 2:1

set span:
- URV – LRV = 0.5 bar (7 psi)
  This span is based on the zero point.

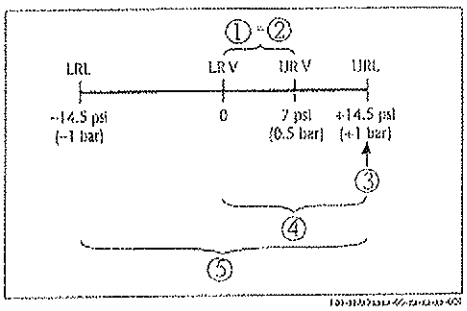

Example: 1 bar (15 psi) measuring cell

Case 3:
- |Lower range value| ≥ |Upper range value|

Example:
- Lower range value (LRV) = –0.6 bar (8 psi)
- Upper range value (URV) = 0 bar
- Nominal value (URL) = 1 bar (14.5 psi)

Turn down:
- TD = URL / |LRV| = 1,67:1

set span:
- URV – LRV = 0.6 bar (8 psi)
  This span is based on the zero point.

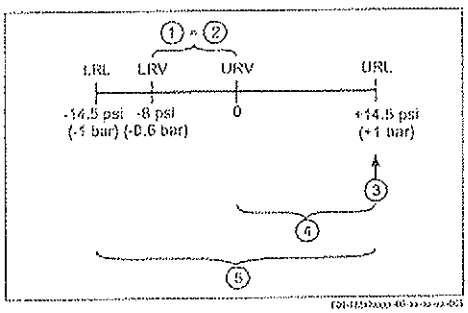

Example: 1 bar measuring cell

1	Set span
2	Zero based span
3	Nominal value ≙ Upper range limit (URL)
4	Nominal measuring range
5	Sensor measuring range
LRL	Lower range limit
URL	Upper range limit
LRV	Lower range value
URV	Upper range value

Output

Output signal

- 4 to 20 mA with superimposed digital communication protocol HART 5.0, 2-wire
- Digital communication signal PROFIBUS PA (Profile 3.0), 2-wire
- Digital communication signal FOUNDATION Fieldbus, 2-wire

Signal range – 4...20 mA HART

3.8 mA to 20.5 mA

Signal on alarm

- 4 to 20 mA HART
  Options:
  – Max. alarm*: can be set from 21 to 23 mA
  – Keep measured value: last measured value is kept
  – Min. alarm: 3.6 mA
  * Factory setting: 22 mA
- PROFIBUS PA: can be set in the Analog Input block,
  options: Last Valid Out Value, Fsafe Value (factory setting), Status bad
- FOUNDATION Fieldbus: can be set,
  options: Last good Value, Fail Safe Value (factory setting), Wrong Value

Load – 4 to 20 mA HART

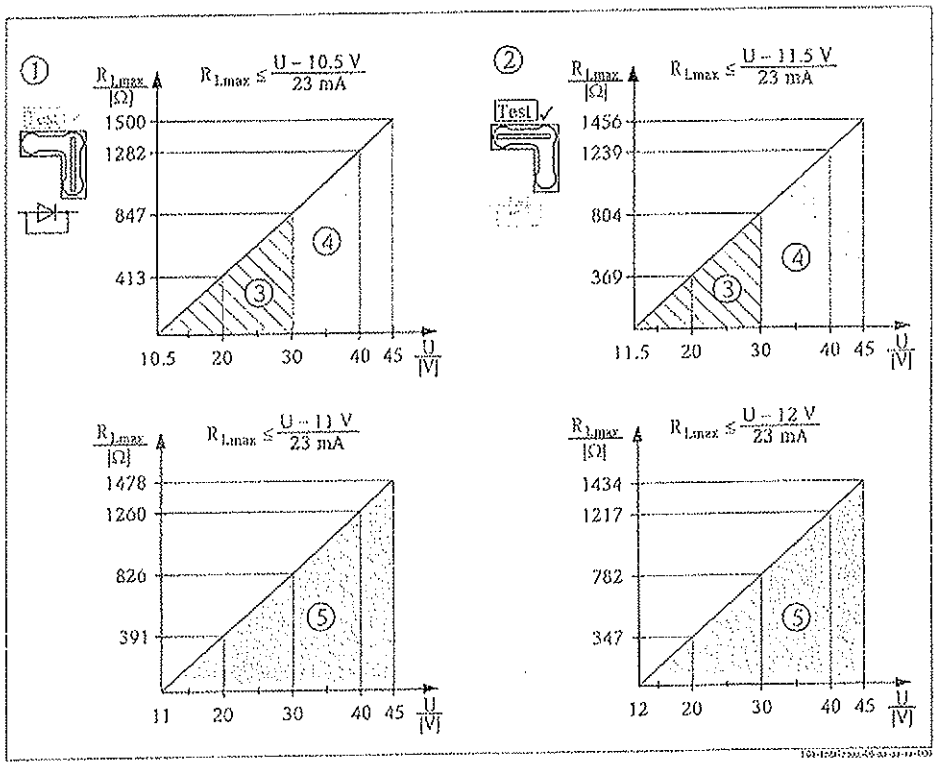

Load diagram, observe the position of the jumper and the explosion protection. (→ See also page 21, section "Measuring 4 to 20 mA test signal".)

1 Jumper for the 4 to 20 mA test signal inserted in "Non-test" position
2 Jumper for the 4 to 20 mA test signal inserted in "Test" position
3 Supply voltage 10.5 (11.5)...30 V DC for 1/2 G, 1 GD, 1/2 GD, FM IS, CSA IS, IECEx ia, NEPSI Ex ia
4 Supply voltage10.5 (11.5)...45 V DC for devices for non-hazardous areas, 1/2 D, 1/3 D, 2 G EEx d, 3 G EEx nA, FM XP, FM DIP, FM NI, CSA XP, CSA Dust-Ex, NEPSI Ex d
5 Supply voltage 11 (12)...45 V DC for PMC71, EEx d[ia], NEPSI Ex d[ia]
R_{Lmax} Maximum load resistance
U Supply voltage

Note!
When operating via a handheld terminal or via PC with an operating program, a minimum communication resistance of 250 Ω must exist within the loop.

Resolution

- Current output: 1 µA
- Display: can be set (setting at the factory: presentation of the maximum accuracy of the transmitter)

Dynamic behavior current output

Dead time, Time constant (T63)

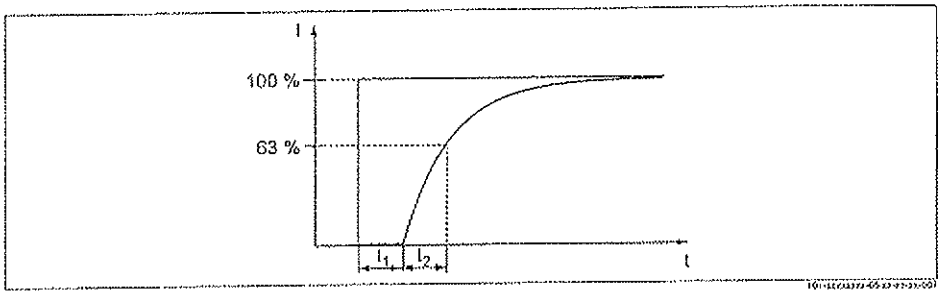

Presentation of the dead time and the time constant

Type	Dead time t_1	Time constant (T63), t_2
PMC71	90 ms	120 ms
PMP71	45 ms	▪ 100 mbar, 250 mbar, 400 mbar (1.5, 3.6, 6 psi) measuring cell: 70 ms ▪ measuring cells ≥ 1 bar (15 psi): 35 ms
PMP75	PMP71 + influence from the diaphragm seal	

Dynamic behavior HART

Dead time, Time constant (T63)

A typical parametrization for the PLC of 3 to 4 values per second results in the following total dead time:

Type	Dead time t_1	Time constant (T63), t_2
PMC71	90 ms	120 ms
PMP71	45 ms	▪ 100 mbar, 250 mbar, 400 mbar (1.5, 3.6, 6 psi) measuring cell: 70 ms ▪ measuring cells ≥ 1 bar (15 psi): 35 ms
PMP75	PMP71 + influence from the diaphragm seal	

Reading cycle

- HART commands: on average 3 to 4 per second on average.
  The Cerabar S commands the BURST MODE functionfor cyclic value transmission via the HART communication protocol.

Response time

≤ 250 ms

Cycle time (Update time)

On average 250 to 330 ms.

Dynamic behavior PROFIBUS PA

Dead time, Time constant (T63)

A typical cyclic parametrization for the PLC of 20 values per second results in the following total dead time:

Type	Dead time t_1	Time constant (T63), t_2
PMC71	340 ms	120 ms
PMP71	295 ms	▪ 100 mbar, 250 mbar, 400 mbar (1.5, 3.6, 6 psi) measuring cell: 70 ms ▪ measuring cells ≥ 1 bar (15 psi): 35 ms
PMP75	PMP71 + influence from the diaphragm seal	

Response time

- cyclic: approx. 10 ms per request
- acyclic: < 50 ms

All values are typical values.

Cycle time (Update time)

The cycle time in a bus segment in cyclic data communication depends on the number of devices, on the segment coupler used and on the internal PLC cycle time.

Dynamic behavior FOUNDATION Fieldbus

Dead time, Time constant (T63)

If the macro cycle time (of the PLC) is set to a typical value of 250 ms, the following total dead time results:

Type	Dead time t_1	Time constant (T63), t_2
PMC71	340 ms	120 ms
PMP71	295 ms	▪ 100 mbar, 250 mbar, 400 mbar (1.5, 3.6, 6 psi) measuring cell: 70 ms ▪ measuring cells ≥ 1 bar (15 psi): 35 ms
PMP75	PMP71 + influence from the diaphragm seal	

Reading cycle

- cyclic: up to 5/s, dependent on the number and type of function blocks used in a closed-control loop
- acyclic: 10/s

Response time

- cyclic: < 80 ms
- acyclic: < 40 ms

All values are typical values.

Cycle time (Update time)

250 ms

Damping

A damping affects all outputs (output signal, display).

- Via on-site display, handheld terminal or PC with operating program, continuous from 0 to 999 s
- Additionally for HART and PROFIBUS PA: via DIP-switch on the electronic insert, switch position "on" = set value and "off"
- Factory setting: 2 s

Power supply

Electrical connection

Note!
- When using the measuring device in hazardous areas, installation must comply with the corresponding national standards and regulations and the Safety Instructions or Installation or Control Drawings. → See also page 87 ff, sections "Safety Instructions" and "Installation/Control Drawings".
- Devices with integrated overvoltage protection must be grounded. → See also page 32.
- Protective circuits against reverse polarity, HF influences and overvoltage peaks are installed.

4 to 20 mA HART

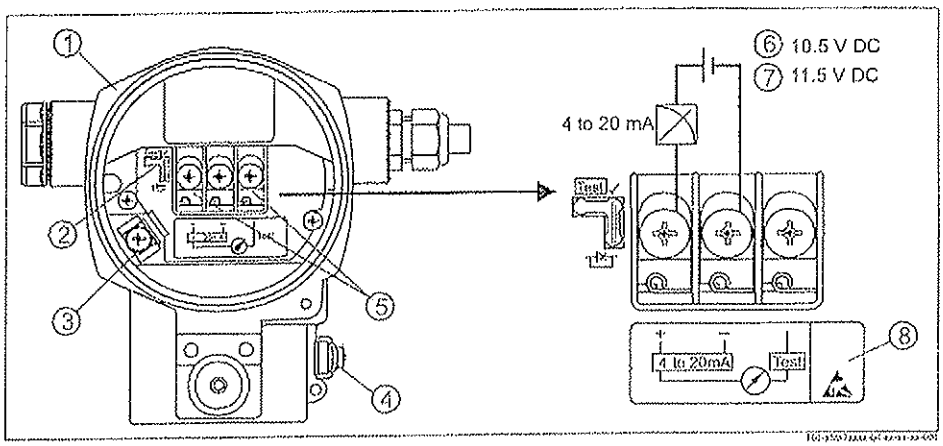

Electrical connection 4 to 20 mA HART

1 Housing
2 Jumper for 4 to 20 mA test signal
→ See also page 21, section "Measuring 4 to 20 mA test signal".
3 Internal ground terminal
4 External ground terminal
5 4 to 20 mA test signal between plus and test terminal
6 Minimum supply voltage 10.5 V DC, if the jumper is inserted in accordance with the illustration.
7 Minimum supply voltage 11.5 V DC, if the jumper is inserted in "Test" position.
8 Devices with integrated overvoltage protection are labelled OVP (overvoltage protection) here (→ see also page 32).

PROFIBUS PA

The two-wire cable must be connected to the "PA+" and "PA–" terminals.

FOUNDATION Fieldbus

The two-wire cable must be connected to the "FF+" and "FF–" terminals.

Devices with Harting plug Han7D

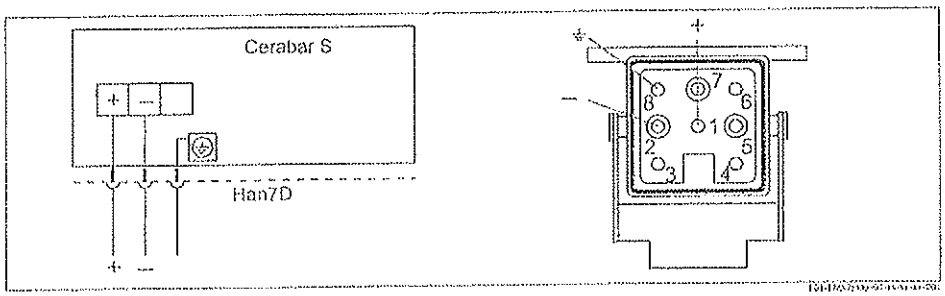

Left: electrical connection for devices with Harting plug Han7D
Right: view of the plug connector at the device

Devices with M12 plug

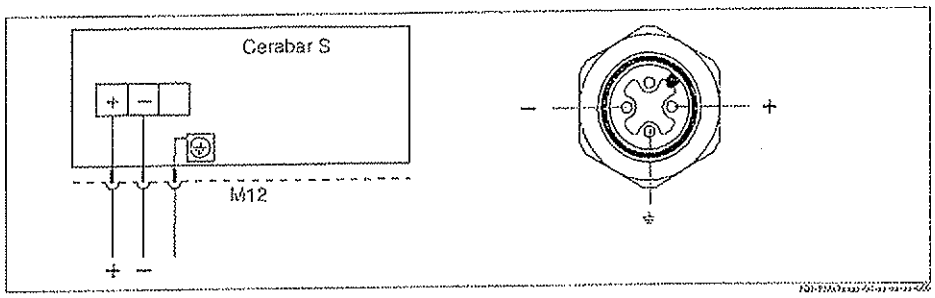

Left: electrical connection for devices with M12 plug
Right: view of the plug at the device

Endress+Hauser offers for devices with M12 plug the following accessories:

Plug-in jack M 12x1, straight
- Material: Body PA; coupling nut CuZn, nickel-plated
- Degree of protection (fully locked): IP67 (NEMA 4X)
- Order number: 52006263

Plug-in jack M 12x1, elbowed
- Material: Body PBT/PA; coupling nut GD-Zn, nickel-plated
- Degree of protection (fully locked): IP67 (NEMA 4X)
- Order number: 51006327

Cable 4x0.34 mm² with M12 socket, elbowed, screw plug, 5 m (16 ft) length
- Material: Body PUR; coupling nut CuSn/Ni; cable PVC
- Degree of protection (fully locked): IP67 (NEMA 4X)
- Order number: 52010285

Devices with 7/8" plug

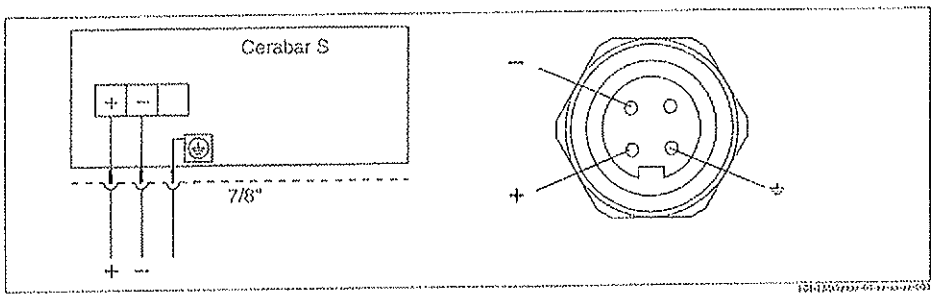

Left: electrical connection for devices with 7/8" plug
Right: view of the plug at the device

Measuring 4 to 20 mA test signal

A 4 to 20 mA signal may be measured via the positive and test terminal without interrupting the measurement. The minimum supply voltage of the device can be reduced by simply changing the position of the jumper. As a result, operation is also possible with lower voltage sources. Observe the position of the jumper in accordance with the following table.

Jumper position for test signal	Description
	– Measuring 4 to 20 mA test signal via plus and test terminal: possible. (Thus, the output current can be measured without interruption via the diode.) – Delivery status – minimum supply voltage: 11.5 V DC
	– Measuring 4 to 20 mA test signal via plus and test terminal: not possible. – minimum supply voltage: 10.5 V DC

Supply voltage

Note!
- When using the measuring device in hazardous areas, installation must comply with the corresponding national standards and regulations and the Safety Instructions or Installation or Control Drawings.
- All explosion protection data are given in separate documentation which is available upon request. The Ex documentation is supplied as standard with all devices approved for use in explosion hazardous areas. → See also page 87 ff sections "Safety Instructions" and "Installation/Control Drawings".

4 to 20 mA HART

- Version for non-hazardous areas, jumper for 4 to 20 mA test signal in "Test" position (delivery status): 11.5 to 45 V DC
- Version for non-hazardous areas, jumper for 4 to 20 mA test signal in "Non-test" position: 10.5 to 45 V DC

PROFIBUS PA

- Version for non-hazardous areas: 9 to 32 V DC

FOUNDATION Fieldbus

- Version for non-hazardous areas: 9 to 32 V DC

Current consumption

- PROFIBUS PA: 13 mA ± 1 mA, switch-on current corresponds to IEC 61158-2, Clause 21
- FOUNDATION Fieldbus: 15 mA ± 1 mA, switch-on current corresponds to IEC 61158-2, Clause 21

Cable entry

→ See also page 74 ff, feature 30 "Housing, Cable entry, Protection".

Cable specification

- Endress+Hauser recommends using shielded, twisted-pair two-wire cables.
- Terminals for wire cross-sections 20 to 14 AWG (0.5 to 2.5 mm^2)
- Cable external diameter: 5 to 9 mm (0.2 to 0.4")

Residual ripple

Without influence on 4 to 20 mA signal up to ± 5% residual ripple within the permitted voltage range [according to HART hardware specification HCF_SPEC-54 (DIN IEC 60381-1)]

Influence of power supply

≤ 0.0006% of URL/1 V

Performance characteristics – general

Reference operating conditions	▪ As per IEC 60770 ▪ Ambient temperature T_U = constant, in the range of: +21 to +33°C (+69.8 to +91.4°F) ▪ Humidity φ = constant, in the range of: 5 to 80 % r.H ▪ Ambient pressure p_U = constant, in the range of: 860 to 1060 mbar (12.5 to 15.4 psi) ▪ Position of the measuring cell: constant, in the range of: ±1° ▪ Input of LOW SENSOR TRIM and HIGH SENSOR TRIM for lower range value and upper range value ▪ Zero based span ▪ Membrane material PMC71: Al_2O_3 (Aluminum oxide ceramic) ▪ Membrane material PMP71 and PMP75: AISI 316L/1.4435 ▪ Filling oil PMP71 and PMP75: silicone oil ▪ Supply voltage: 24 V DC ± 3 V DC ▪ Load with HART: 250 Ω
Uncertainty of measurement for small absolute pressure ranges	The smallest extended uncertainty of measurement that can be returned by our standards is: ▪ 0.4% of the set span in the range of 1 to 30 mbar (0.01 to 0.4 psi) and ▪ 1% of the set span in the range < 1 mbar (0.01 psi).
Long-term stability	PMC71/PMP71/PMP75: ▪ For measuring ranges ≥ 1 bar (15 psi): ± 0.05 % of URL/year PMC71: ▪ 100 mbar to 40 bar (1.5 to 600 psi): ±0.2 % of URL/10 years ▪ 100 mbar to 40 bar (1.5 to 600 psi), absolute pressure sensor: ±0.3 % of URL/10 years PMP71: ▪ 1 bar to 10 bar (15 to 1500 psi): ±0.175 % of URL/5 years ▪ 40 bar (600 psi): ±0.2 % of URL/5 years ▪ 40 bar (600 psi): ±0.4 % of URL/10 years ▪ 100 bar (1500 psi): ±0.2 % of URL/10 years ▪ 400 bar (6000 psi): ±1 % of URL/10 years
Influence of the installation position	▪ PMC71 [1]: ≤ 0.18 mbar (0.003 psi) ▪ PMP71 [1, 2] – Process connections thread G 1 A, G 1 1/2, G 2, 1 1/2 MNPT, 2 MNPT, M 44x1.25, EN/DIN, ANSI and JIS flanges: ≤ 10 mbar (0.15 psi) – Process connections thread: G 1/2, 1/2 MNPT, JIS G 1/2, JIS R 1/2, M20x1.5: ≤ 4 mbar (0.06 psi) 1) Device rotated 180°, process connection pointing upwards. 2) This value is doubled for devices with inert oil. Position-dependent zero shift can be corrected. → See also page 27, section "General installation instructions" and page 70 ff section "Installation instructions, Diaphragm seal systems".

Performance characteristics – ceramic diaphragm

Reference accuracy – PMC71

The reference accuracy comprises the non-linearity according to limit point setting, hysteresis and non-reproducibility as per IEC 60770.

Measuring cell	Gauge pressure sensor	Absolute pressure sensor
	% of the set span	
100 mbar (1.5 psi)	▪ TD 1:1 to TD 10:1 = ±0.075 ▪ TD > 10:1 = ±0.0075 x TD	▪ TD 1:1 to TD 5:1 = ±0.075 ▪ TD > 5:1 = ±0.015 x TD
250 mbar (4 psi)	▪ TD 1:1 to TD 15:1 = ±0.075 ▪ TD > 15:1 = ±0.005 x TD	▪ TD 1:1 to TD 10:1 = ±0.075 ▪ TD > 10:1 = ±0.0075 x TD
400 mbar, 1 bar, 2 bar, 4 bar, 10 bar (6, 15, 30, 60, 150 psi)	▪ TD 1:1 to TD 15:1 = ±0.075 ▪ TD > 15:1 = ±0.005 x TD	▪ TD 1:1 to TD 15:1 = ±0.075 ▪ TD > 15:1 = ±0.005 x TD
40 bar (600 psi)	▪ TD 1:1 to TD 10:1 = ±0.075 ▪ TD > 10:1 = ±0.0075 x TD	▪ TD 1:1 to TD 10:1 = ±0.075 ▪ TD > 10:1 = ±0.0075 x TD
Platinum version: 1 bar, 2 bar, 4 bar, 10 bar (15, 30, 60, 150 psi)	▪ TD 1:1 = ±0.05	▪ TD 1:1 = ±0.05

Total performance – PMC71

The "Total performance" specification comprises the non-linearity including hysteresis, non-reproducibility as well as the thermal change of the zero point.

Measuring cell	PMC71	PMC71 High temperature version
	% of URL	
100 mbar, 250 mbar, 400 mbar (1.5, 4, 6 psi)	±0.2	—
1 bar, 2 bar, 4 bar, 10 bar, 40 bar (15, 30, 60, 150, 600 psi)	±0.15	—
all measuring cells	—	±0.46
All specifications apply to the temperature range −10 to +60°C (+14 to +140°F).		

Total Error - PMC71

The total error comprises the long-term stability and the total performance:

Measuring cell	PMC71	PMC71 High temperature version
	% of URL/year	
100 mbar, 250 mbar, 400 mbar (1.5, 4, 6 psi)	±0.25	—
1 bar, 2 bar, 4 bar, 10 bar, 40 bar (15, 30, 60, 150, 600 psi)	±0.2	—
all measuring cells	—	±0.51

Warm-up period – PMC71

- 4 to 20 mA HART : < 10 s
- PROFIBUS PA: 6 s
- FOUNDATION Fieldbus: 50 s

Thermal change of the zero output and the output span – PMC71

PMC71

Measuring cell	–10 to +60 °C (+14 to +140 °F)	–20 to –10 °C, +60 to +125 °C (–4 to +14°F, +140 to +257°F)
	% of the set span	
100 mbar, 250 mbar, 400 mbar (1.5, 4, 6 psi)	±(0.088 x TD + 0.088)	±(0.138 x TD + 0.138)
1 bar, 2 bar, 4 bar, 10 bar, 40 bar (15, 30, 60, 150, 600 psi)	±(0.088 x TD + 0.04)	±(0.175 x TD + 0.075)

PMC71 High temperature version

Measuring cell	–10 to +60 °C (+14 to +140 °F)	–20 to –10 °C, +60 to +150 °C (–4 to +14°F, +140 to +302°F)
	% of the set span	
100 mbar, 250 mbar, 400 mbar (1.5, 4, 6 psi)	±(0.088 x TD + 0.088)	—
1 bar, 2 bar, 4 bar, 10 bar, 40 bar (15, 30, 60, 150, 600 psi)	±(0.088 x TD + 0.04)	±(0.50 x TD)
100 mbar (1.5 psi) (Absolute pressure sensor)	—	±(1.25 x TD)
250 mbar, 400 mbar, 1 bar, 2 bar, 4 bar, 10 bar (4, 6, 15, 30, 60, 150 psi) (Absolute pressure sensor)	—	±(0.75 x TD)
40 bar (600 psi) (Absolute pressure sensor)	—	±(0.50 x TD)

Performance characteristics – metallic diaphragm

Reference accuracy – PMP71, PMP75

The reference accuracy comprises the non-linearity according to limit point setting, hysteresis and non-reproducibility as per IEC 60770.

Measuring cell	Sensor	without capillary (PMP71 and PMP75)	with capillary (only PMP75)
		% of the set span	
400 mbar (6 psi)	Gauge pressure/ Absolute pressure	▪ TD 1:1 = ±0.15 ▪ TD > 1:1 = ±0.15 x TD	▪ TD 1:1 = ±0.15 ▪ TD > 1:1 = ±0.15 x TD
1 bar (15 psi)	Gauge pressure/ Absolute pressure	▪ TD 1:1 to TD 2,5:1 = ±0,075 ▪ TD > 2,5:1 = ±0.03 x TD	▪ TD 1:1 to TD 2.5:1 = ±0.1 ▪ TD > 2.5:1 = ±0.04 x TD
2 bar (30 psi)	Gauge pressure	▪ TD 1:1 to TD 5:1 = ±0.075 ▪ TD > 5:1 = ±0.015 x TD	▪ TD 1:1 to TD 2.5:1 = ±0.1 ▪ TD > 2.5:1 = ±0.04 x TD
2 bar (30 psi)	Absolute pressure	▪ TD 1:1 to TD 5:1 = ±0.075 ▪ TD > 5:1 = ±0.015 x TD	▪ TD 1:1 to TD 5:1 = ±0.075 ▪ TD > 5:1 = ±0.015 x TD
4 bar (60 psi)	Gauge pressure/ Absolute pressure	▪ TD 1:1 to TD 10:1 = ±0.075 ▪ TD > 10:1 = ±0.0075 x TD	▪ TD 1:1 to TD 10:1 = ±0.075 ▪ TD > 10:1 = ±0.0075 x TD
10 bar, 40 bar (15, 600 psi)	Gauge pressure/ Absolute pressure	▪ TD 1:1 to TD 15:1 = ±0.075 ▪ TD > 15:1 = ±0.005 x TD	▪ TD 1:1 to TD 15:1 = ±0.075 ▪ TD > 15:1 = ±0.005 x TD
100 bar (1500 psi)	Gauge pressure/ Absolute pressure	▪ TD 1:1 to TD 10:1 = ±0.075 ▪ TD > 10:1 = ±0.0075 x TD	▪ TD 1:1 to TD 10:1 = ±0.075 ▪ TD > 10:1 = ±0.0075 x TD
400 bar (6000 psi)	Gauge pressure/ Absolute pressure	▪ TD 1:1 to TD 5:1 = ±0.15 ▪ TD > 5:1 = ±0.03 x TD	▪ TD 1:1 to TD 5:1 = ±0.15 ▪ TD > 5:1 = ±0.03 x TD
700 bar (10,150 psi) (only PMP71)	Absolute pressure	▪ TD 1:1 to TD 5:1 = ±0.15 ▪ TD > 5:1 = ±0.03 x TD	—

Total performance – PMP71

The "Total performance" specification comprises the non-linearity including hysteresis, non-reproducibility as well as the thermal change of the zero point.

Measuring cell	PMP71	PMP71 with Gold-Rhodium-coated membrane
	% of URL	
400 mbar (6 psi)	±0.25	±1.25
1 bar (15 psi)	±0.15	±0.75
2 bar (30 psi)	±0.15	±0.45
4 bar (60 psi)	±0.15	±0.3
10 bar, 40 bar (15, 600 psi)	±0.15	±0.15
100 bar (1500 psi)	±0.25	±0.25
400 bar (6000 psi)	±0.3	±0.3
700 bar (10,150 psi)	±0.3	±0.3
All specifications apply to the temperature range –10 to +60°C (+14 to +140°F).		

Total Error - PMP71

The total error comprises the long-term stability and the total performance:

Measuring cell	% of URL/year
400 mbar (6 psi)	± 0.3
1 bar, 2 bar, 4 bar, 10 bar, 40 bar (15, 30, 60, 150, 600 psi)	± 0.2
100 bar (1500 psi)	± 0.3
400 bar (6000 psi)	± 0.35
700 bar (10,150 psi)	± 0.35

Warm-up period – PMP71, PMP75

- 4 to 20 mA HART : < 10 s
- PROFIBUS PA: 6 s
- FOUNDATION Fieldbus: 50 s

Thermal change of the zero output and the output span – PMP71 and PMP75

PMP71 and PMP75 (basic device)

Measuring cell	–10 to +60 °C (+14 to +140°F)	–40 to –10 °C, +60 to +85 °C (–40 to +14°F, +140 to +185°F)
	% of the set span	
400 mbar (6 psi)	±(0.2 x TD + 0.015)	±(0.4 x TD + 0.03)
1 bar, 2 bar, 4 bar, 10 bar, 40 bar (15, 30, 60, 150, 600 psi)	±(0.1 x TD + 0.01)	±(0.4 x TD + 0.02)
100 bar (1500 psi)	±(0.2 x TD + 0.015)	±(0.4 x TD + 0.03)
400 bar (6000 psi)	±(0.35 x TD + 0.02)	±(0.7 x TD + 0.04)
700 bar (10,150 psi)	±(0.35 x TD + 0.02)	±(0.7 x TD + 0.04)

Note!
When using a PMP75, the influence from the respective diaphragm seal must be taken into account.
(→ See also page 65 ff "Planning instructions, diaphragm seal systems" and page 49 ff "Process connections PMP75 (with metallic measuring diaphragm)").

Operating conditions (installation)

General installation instructions

- For PMP75: See page 70 ff, "Installation instructions, Diaphragm seal systems" section.
- The position-dependent zero shift can be corrected directly at the device via operating key, for devices with external operation even in hazardous areas. Diaphragm seals also shift the zero point, depending on the installation position.
  (→ See also page 70 ff, section "Installation instructions, Diaphragm seal systems").
- The housing of the Cerabar S can be rotated up to 380°. → See also page 29, section "Rotate the housing".
- Endress+Hauser offers a mounting bracket for installing on pipes or walls. → See also page 28, section "Wall and pipe-mounting".

Installation instructions for devices without diaphragm seal – PMC71 and PMP71

Cerabar S transmitters without diaphragm seal are mounted as per the norms for a manometer (DIN EN 839-2). We recommend the use of shut-off devices and siphons. The orientation depends on the measuring application.

Pressure measurement in gases

- Mount Cerabar S with shut-off device above the tapping point so that condensate can flow into the process.

Pressure measurement in steams

- Mount Cerabar S with siphon above the tapping point.
  The siphon reduces the temperature to almost ambient temperature.
- Fill the siphon with fluid before commissioning.

Pressure measurement in liquids

- Mount Cerabar S with shut-off device below or at the same level as the tapping point.

Level measurement

- Mount Cerabar S below the lowest measuring point.
- Do not mount the device at the following positions:
  In the fill flow, in the tank outlet or at a point in the container which could be affected by pressure pulses from an agitator or a pump.
- The calibration and functional test can be carried out more easily if you mount the device after a shut-off device.

Heat insulation – PMC71 high temperature version and PMP75

The PMC71 high temperature version and the PMP75 must only be insulated up to a certain height. The maximum permitted insulation height is labelled on the devices and applies to an insulation material with a heat conductivity ≤ 0.04 W/(m x K) and to the maximum permitted ambient and process temperature (→ see table below). The data were determined under the most critical application "quiescent air".

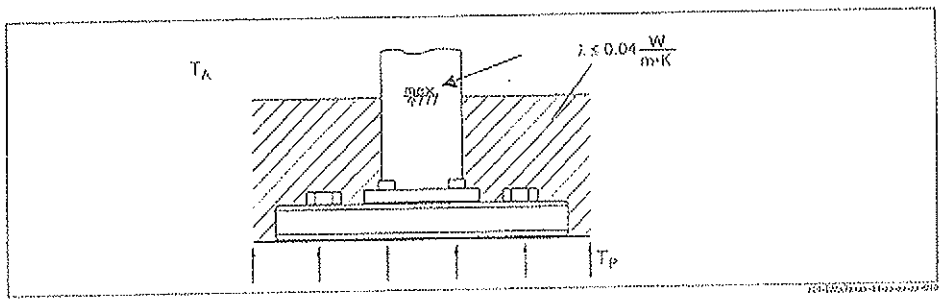

Maximum insulation height, here e.g. PMC71 with flange

	PMC71 high temperature version	PMP75
Ambient temperature (T_A)	≤ 70°C (158°F)	≤ 70°C (158°F)
Process temperature (T_P)	≤ 150°C (302°F)	max. 350°C (662°F), depending on the diaphragm seal filling oil used (→ see page 66)

Mounting with temperature isolator

Endress+Hauser recommends the use of temperature isolators in the event of constant extreme fluid temperatures which lead to the maximum permissible ambient temperature of +85°C (+185°F) being exceeded. Depending on the filling oil used, Cerabar S devices with temperature isolators can be used for maximum temperatures of up to 260°C (+500°F). → For the temperature application limits of filling oils, see page 66, "Diaphragm seal filling oil" section.
To minimise the influence of rising heat, Endress+Hauser recommends the device be mounted horizontally or with the housing pointing downwards.
The additional installation height also brings about a zero point shift of maximum 21 mbar due to the hydrostatic columns in the temperature isolator. The position-dependent zero shift can be corrected.

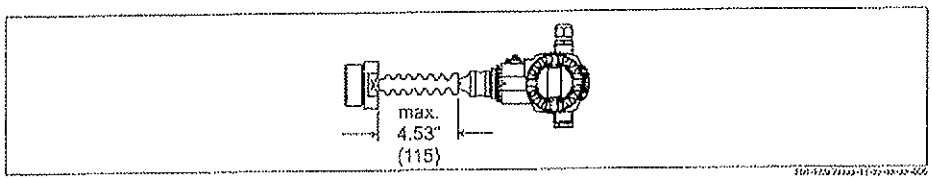

PMP75 with temperature isolator

Wall and pipe-mounting

Endress+Hauser offers a mounting bracket for installing the device on pipes or walls. → See also page 74 ff, feature 110, "Additional options 2".

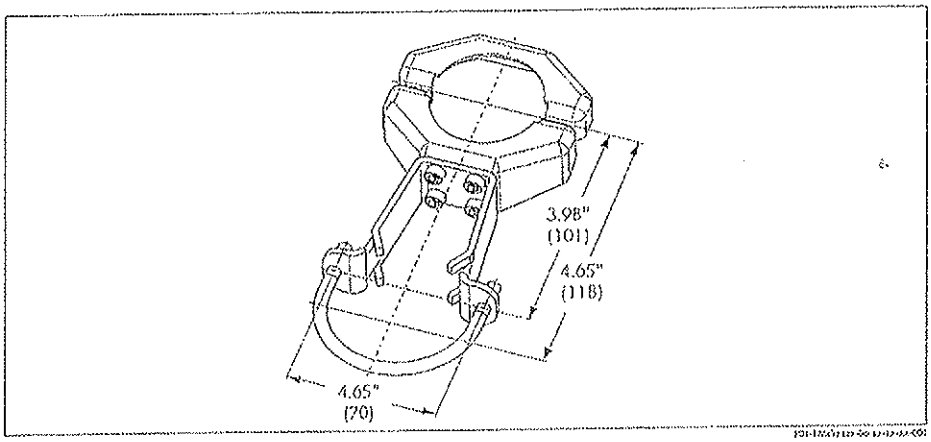

Remote version

With the remote version, you are able to mount the housing with the electronics insert at a distance from the measuring point. This facilitates zero-interference measurement:
- Under particularly difficult measuring conditions (at installation locations that are cramped or difficult to access)
- If rapid cleaning of the measuring point is required
- If the measuring point is exposed to vibrations.

You can choose between different cable versions:
- PE: 2 m, 5 m and 10 m (6, 16, 33 feet)
- FEP: 5 m (16 ft).

→ See also Page 81 ff, Feature 110, "Additional options 2", Version "G".

→ For the dimensions, see Page 62.

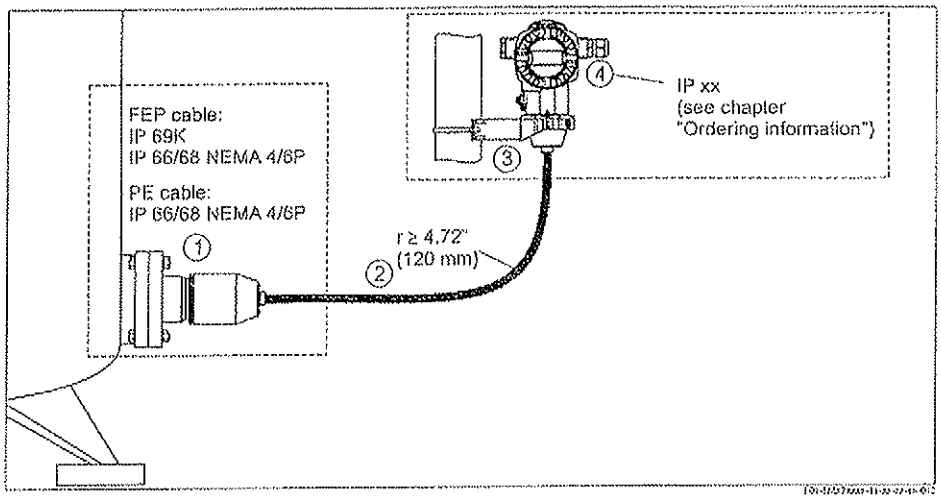

In the case of the remote version, the sensor is delivered with the process connection and cable ready mounted. The housing and a mounting bracket are enclosed as separate units. The cable is provided with a socket at both ends. These sockets are simply connected to the housing and the sensor.

1 Process connection with sensor
2 Cable, both ends are fitted with a socket
3 Mounting bracket provided, suitable for pipe and wall mounting
4 Housing with electronic insert

Degree of protection for the process connection with sensor with the use of
- FEP cable:
  - IP 69K
  - IP 66/68 NEMA 4/6P
- PE cable:
  - IP 66/68 NEMA 4/6P

Technical data of the PE and FEP cable:
- Minimum bending radius: 120 mm (4.72 inch)
- Cable extraction force: max. 450 N (101 lbf)
- Resistance to UV light

Use in hazardous area:
- Intrinsically safe installations (Ex ia/IS)
- FM/CSA IS: for Div.1 installatin only

Rotating the housing

The housing can be rotated up to 380° after loosening the Allen screw.

Your benefits
- Simple mounting by optimally aligning the housing
- Good, accessible device operation
- Optimum readability of the local display (optional).

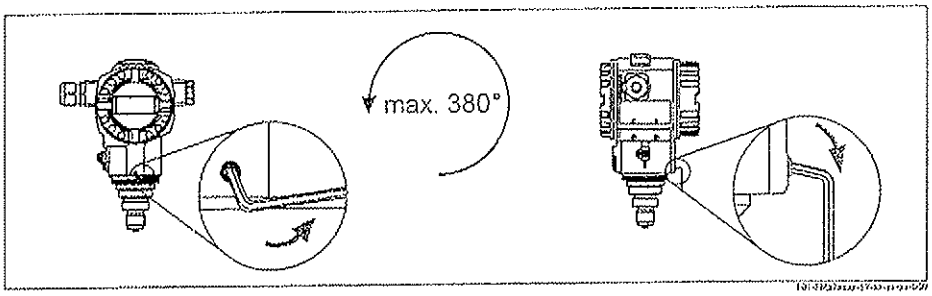

Align the housing by loosening the Allen screw.
T14 housing: 2 mm Allen key; T17 housing: 3 mm Allen key

Oxygen applications

Oxygen and other gases can react explosively to oils, grease and plastics, such that, among other things, the following precautions must be taken:
- All components of the system, such as measuring devices, must be cleaned in accordance with the BAM (DIN 19247) requirements.
- Dependent on the materials used, a certain maximum temperature and a maximum pressure for oxygen applications must not be exceeded.

The devices suitable for gaseous oxygen applications are listed in the following table with the specification p_{max}.

Order code for devices cleaned for oxygen applications	p_{max} for oxygen applications	T_{max} for oxygen applications
PMC71 – * * * ** * ** 2 * *, Devices with sensors, nominal value < 10 bar (150 psi)	Overpressure limit (OPL) of sensor[1, 2]	60°C (140°F)
PMC71 – * * * ** * ** 2 * *, Devices with sensors, nominal value ≥ 10 bar (150 psi)	30 bar (435 psi)	60°C (140°F)
PMP71 – * * * ** * * ** N * *	Depends on the weakest link in terms of pressure of the selected components: over pressure limit (OPL) of sensor[1] or process connection (1.5 x PN) or filling fluid (160 bar / 2400 psig)	85°C (185°F)
PMP75 – * * * ** * * * ** N * *	Depends on the weakest link in terms of pressure of the selected components: over pressure limit (OPL) of sensor[1] or process connection (1.5 x PN) or filling fluid (160 bar / 2400 psig)	85°C (185°F)

1) → See page 74 ff "Ordering information", feature 40 "Sensor range; sensor overload limit (= OPL)"

2) PMC71 with PVDF thread or flange p_{max} = 15 bar (225 psi)

LABS-free applications

Cleaning of the transmitter for the use e.g. in paint shops.

Ultra pure gas applications

Endress+Hauser also offers the degreased device for special applications, such as ultra pure gas.
No special restrictions regarding the process conditions apply to this device.

→ See also page 76, "Ordering information PMC71", feature 80 "Seal" or page 80, "Ordering information PMP71", feature 90 "Fill fluid".

Diaphragm seals for materials with hydrogen build-up (Gold-Rhodium coating)

With regard to materials in which hydrogen build-up takes place, hydrogen atoms can diffuse through the metal diaphragms. This can result in incorrect measurement results.
Endress+Hauser offers diaphragms with Gold-Rhodium coating for this application.

→ See also page 78 "Ordering information PMP71" and page 83 "Ordering information PMP75", feature 60 "Membrane material" version "6".

Operating conditions (environment)

Ambient temperature limits

- PMC71:
  - −40 to +85°C (−40 to +185°F)
  - High temperature version: −20 to +70°C (−4 to +158°F)
    (Version "T" for feature 100 "Additional options 1" or feature 110 "Additional options 2"),
    → For the maximum insulation height see page 27.
- PMP71: −40 to +85°C (−40 to +185°F)
  devices for lower temperatures on request
- PMP75: −40 to +85°C (−40 to +185°F)
  devices for lower temperatures on request
  → For the maximum insulation height see page 27.
- Local display: −20 to +70°C (−4 to +158°F)
  Extended temperature application range with restrictions in optical properties such as display speed and contrast: −40 to +85°C (−40 to +185°F)
- Remote housing: −40 to +60°C (−40 to +140°F)

Note!
For high-temperature applications, either a PMP75 with a temperature isolator or with a capillary can be used. If vibration also occurs in the application, Endress+Hauser recommends you use a PMP75 with a capillary. If a PMP75 with a temperature isolator or capillary is used, we recommend a suitable retaining unit for mounting (see "Wall and pipe-mounting" Section on page 28).

For devices for use in hazardous areas, see Safety instructions, Installation or Control Drawing. (→ See also page 87, sections "Safety Instructions" and "Installation/Control Drawings".)

The device can be used in this temperature range. The values of the specification, such as thermal change, may be exceeded. → See also DIN 16086.

Storage temperature range

- −40 to +100°C (−40 to +212°F)
- On-site display: −40 to +85°C (−40 to +185°F)
- Separate housing: −40 to +60°C (−40 to +140°F)

Degree of protection

- → See page 74 ff, feature 30 "Housing, Cable entry, Protection".
- Degree of protection IP 68 (NEMA 6P) for T17 housing: 1.83 mH_2O (6 ftH_2O) for 24 h
- Remote housing → see Page 29.

Climate class

Class 4K4H (air temperature: −20 to 55°C/−4 to +131°F, relative humidity: 4 to 100%) fulfilled as per DIN EN 60721-3-4 (condensation possible)

1) With PMC71, avoid condensate in the device (avoid moisture collecting in the device).

Vibration resistance

Device/Additional option	Test standard	Vibration resistance
PMC71 [1]	GL	guaranteed for 3 to 25 Hz: ±16 mm (0.63"); 25 to 100 Hz: 4 g in all 3 planes
PMP71		
PMP75 [2,3]		
with mounting bracket	IEC 61298-3	guaranteed for 10 to 60 Hz: ±0.15 mm (0.006"); 60 to 500 Hz: 2 g in all 3 planes

1) not for high temperature version with EEx d[ia], CSA XP or FM XP

2) with aluminum T14 housing only

3) For applications with high temperatures, either a PMP75 with a temperature isolator or with a capillary can be used. If vibration also occurs in the application, Endress+Hauser recommends using a PMP75 with a capillary. If a PMP75 with a temperature isolator or capillary is used, it must be mounted with a mounting bracket. (→ see also page 28).

Electromagnetic compatibility

- Electromagnetic compatibility to EN 61326 and NAMUR recommendation EMC (NE21). For details refer to the declaration of conformity.
- With enhanced immunity against electromagnetic fields as per EN 61000-4-3: 30 V/m with closed cover [1]
- Maximum deviation: < 0.5% of span
- All EMC measurements were performed with a turn down (TD) = 2:1.

1) for devices with T14 housing

Overvoltage protection

- Overvoltage protection:
  - Nominal functioning DC voltage: 600 V
  - Nominal discharge current: 10 kA
- Surge current check I = 20 kA as per DIN EN 60079-14: 8/20 µs satisfied
- Arrester AC current check I = 10 A satisfied

→ See also page 77 ff, feature 100 "Additional options 1" and feature 110 "Additional options 2", version "M Overvoltage protection".

Note!
Devices with integrated overvoltage protection must be grounded.

Operating conditions (Process)

Process temperature limits

PMC71 (with ceramic measuring diaphragm)

- –25 to +125°C (–13 to +257°F)
- High temperature version: –20 to +150°C (–4 to +302°F)
  → See also page 77, feature 100 "Additional options 1", Version "T".
- Observe the process temperature range of the seal. See also the following section "Process temperature range, seals".

Extreme jumps in temperature can result in temporary measuring errors. Temperature compensation takes effect after several minutes. Internal temperature compensation is faster the smaller the temperature jump and the longer the time interval.

PMP71 (with metallic measuring diaphragm)

Description	Temperature operating range
Process connections with internal diaphragm	–40 to +125°C (–40 to +257°F) (+150 °C/302°F for max. one hour)
Process connections with flush-mounted diaphragm, G 1 A, G 1 1/2 A, G 2 A, 1 NPT, 1 1/2 NPT, 2 NPT, M 44 x 1.25, EN/DIN, ANSI and JIS flanges	–40 to +100°C (–40 to +212°F)
Process connections with flush-mounted diaphragm, G 1/2 A, M 20	–20 to +85°C (–4 to +185°F)

Lower temperatures on request.

PMP75 (with metallic measuring diaphragm)

- depending on the diaphragm seal and filling oil from –70°C (–94°F) up to +400°C (+752°F). Observe the temperature application limits of the diaphragm seal oil. → See also page 66, section "Diaphragm seal filling oils".

Note!
- Do not use diaphragm seals with 0.09 mm (0.004") PTFE foil on AISI 316L SS (1.4435/1.4404) for vacuum applications, upper temperature limit +204°C (+400°F).
- For oxygen applications, observe page 30, section "Oxygen applications".

Process temperature range, seals

PMC71 (with ceramic measuring diaphragm)

Version for feature 80 in the order code	Seal	Process temperature range
A, L	FKM Viton	–25 to +125°C/150°C [1] (–4 to +257°F/302°F)
B [2, 3]	EPDM (FDA 21CFR177.2600; 3A Class II; USP Class VI) DVGW (KTW, W270, W534), WRAS, ACS, NSF61	–20 to +125°C/150°C [1] (–4 to +257°F/302°F)
B [3]	EPDM	–20 to +125°C (–4 to +257°F)
D, M	Kalrez, Compound 4079	+5 to +125°C/150°C [1] (+41 to 257°F/302°F)
E	Chemraz, Compound 505	–10 to +125°C/150°C [1] (14 to +257°F/302°F)
F [2, 4]	HNBR (FDA 21CFR177.2600; 3A Class II; KTW; AFNOR; BAM)	–25 to +125°C (–4 to +257°F)
F [4]	NBR	–10 to +100°C (14 to +212°F)
1	FKM Viton, cleaned from oil and grease	–10 to +125°C (+14 to +257°F)
2	FKM Viton, cleaned for oxygen service	–10 to +60 °C (+14 to +140°F)
The process temperature ranges specified here refer to permanent application of the PMC71. They may be exceeded for a short time (e.g. for cleaning).		

1) +150°C (+302°F): for high temperature version
→ See also page 77, feature 100 "Additional options 1" and feature 110 "Additional options 2", Version "T".

2) These seals are used for devices with 3A-approved process connections.

3) With applications of saturated steam a Cerabar S with metallic diaphragm seal is to be used.

4) For devices with NBR or HNBR seals, the values for "Toatal Performance" (→ see page 23) and "Thermal change" (→ see page 24) must be multiplied by the factor 3.

Pressure specifications

- The maximum pressure for the measuring device is dependent on the lowest-rated element with regard to pressure, see the following sections for this:
  - → page 13 ff, section "Measuring range"
  - → chapter "Mechanical construction".
  The MWP (maximum working pressure) is specified on the nameplate. This value refers to a reference temperature of 20°C (68°F) or 100°F for ANSI flanges and may be applied to the device for an unlimited time. Observe temperature dependency.
- The pressure values permitted at higher temperatures can be found in the following standards:
  - EN 1092-1: 2001 Tab. 18 [1]
  - ASME B 16.5a – 1998 Tab. 2-2.2 F316
  - ASME B 16.5a – 1998 Tab. 2.3.8 N10276
  - JIS B 2220.
- The test pressure corresponds to the over pressure limit of the measuring instrument (Over Pressure Limits OPL = 1.5 x MWP [2]) and may fit only temporally limited, so that no permanent damage develops.
- The Pressure Equipment Directive (EC Directive 97/23/EC) uses the abbreviation "PS". The abbreviation "PS" corresponds to the MWP (maximum working pressure) of the measuring device.
- In the case of sensor range and process connections where the OPL (Over pressure limit) of the pressure connection is smaller than the nominal value of the sensor, the device is set at the factory, at the very maximum, to the OPL value of the process connection. If you want to use the entire sensor range, select a process connection with a higher OPL value (1.5 x PN; PN = MWP).
- In oxygen applications, the values for "p_{max} and T_{max} for oxygen applications" as per page 30, "Oxygen applications" may not be exceeded.

1) With regard to their stability-temperature property, the materials 1.4435 and 1.4404 are grouped together under 13E0 in EN 1092-1 Tab. 18. The chemical composition of the two materials can be identical.

2) The equation does not apply for PMP71 and PMP75 with a 40 bar (600 psi) or 100 bar (1500 psi) measuring cell.

Mechanical construction

Housing dimensions T14

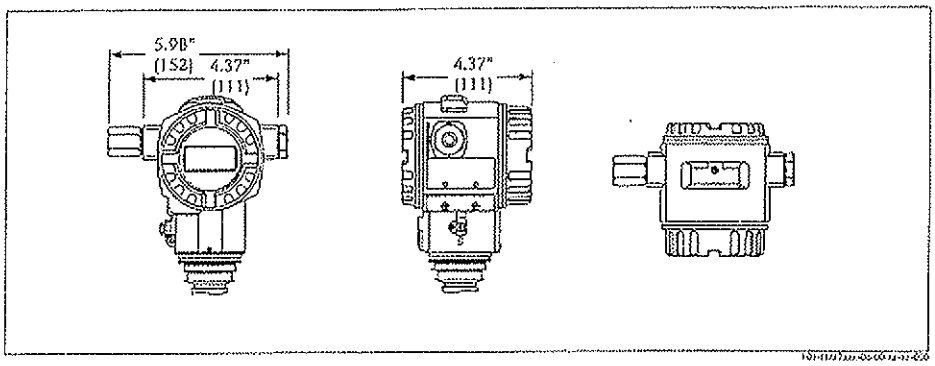

Front view, left-hand side view, top view
→ See the process connection in question for installation height. Housing weight see page 63.

Housing dimensions T17

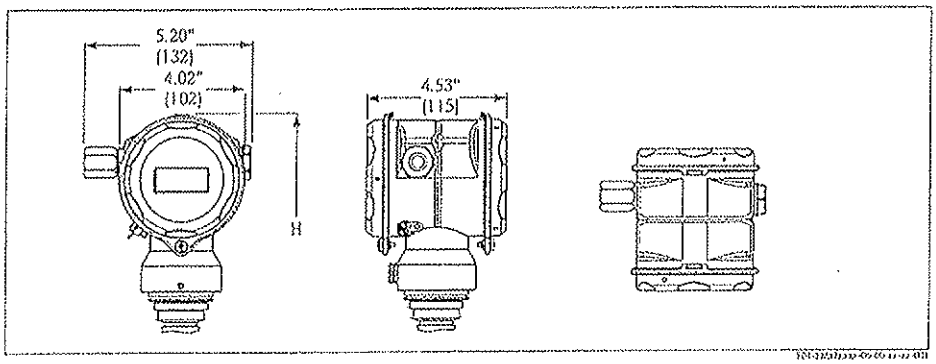

Front view, left-hand side view, top view
→ See the process connection in question for installation height. Housing weight see page 63.

Process connections PMC71 (with ceramic measuring diaphragm)

Note!
Some device versions have CRN approval. For a CRN-approved device, a CRN-approved process connection (→ see page 75, feature 70 "Process connection") has to be ordered with a CSA approval (→ see page 74, feature 10 "Approval"). These devices are fitted with a separate plate bearing the registration number 0F10525.5C.

Thread, internal diaphragm

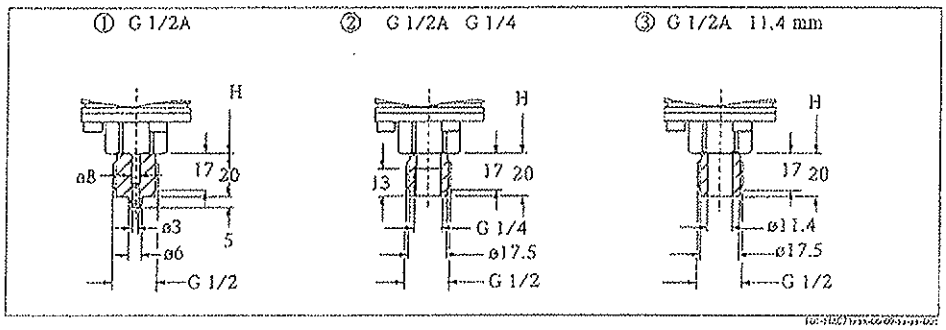

Process connections PMC71, thread ISO 228
→ Installation height see page 36.

1 Thread ISO 228 G 1/2 A EN 837: Material version GA: AISI 316L/1.4435, version GB: Alloy C276/2.4819, version GC: Monel, Version GD: PVDF (max.: 15 bar/225 psi, max.: –10 to +60°C/+14 to +140°F); mount version "GD" with a mounting bracket only (→ see also page 28); Weight: 0.63 kg (1.4 lb)
2 Thread ISO 228 G 1/2 A G 1/4 (female): Material version GE: AISI 316L/1.4435, version GF: Alloy C276/2.4819, version GG: Monel; Weight: 0.63 kg (1.4 lb)
3 Thread ISO 228 G 1/2 A hole 11.4 mm (0.45"): Material version GH: AISI 316L/1.4435, version GJ: Alloy C276/2.4819, version GK: Monel; Weight: 0.63 kg (1.4 lb)

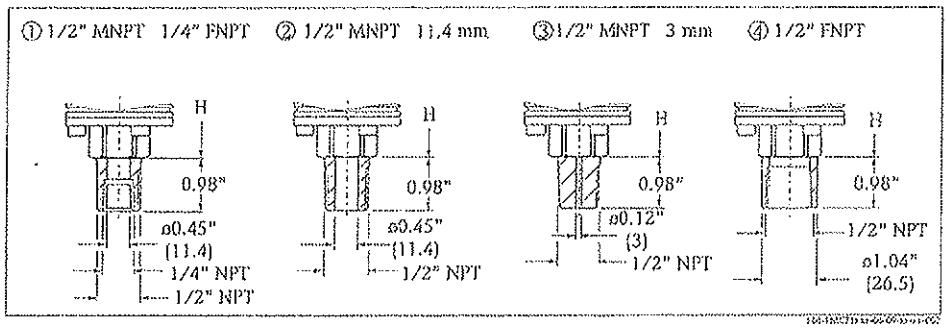

Process connections PMC71, thread ANSI
→ Installation height see page 36.

1 Thread ANSI 1/2 MNPT 1/4 FNPT: Material version RA: AISI 316L/1.4435, version RB: Alloy C276/2.4819, version RC: Monel; Weight: 0.63 kg (1.4 lb)
2 Thread ANSI 1/2 MNPT hole 11.4 mm (0.45"): Material version RD: AISI 316L/1.4435, version RE: Alloy C276/2.4819, version RF: Monel; Weight: 0.63 kg (1.4 lb)
3 Thread ANSI 1/2 MNPT hole 3 mm (0.12"): Material version RG: PVDF(max.: 15 bar/225 psi, max.: –10 to +60°C/+14 to +140°F), mount with mounting bracket only (→ see also page 28); Weight: 0.63 kg (1.4 lb)
4 Thread ANSI 1/2 FNPT: Material version RH: AISI 316L/1.4435, version RJ: Alloy C276/2.4819, version RK: Monel; Weight: 0.63 kg (1.4 lb)

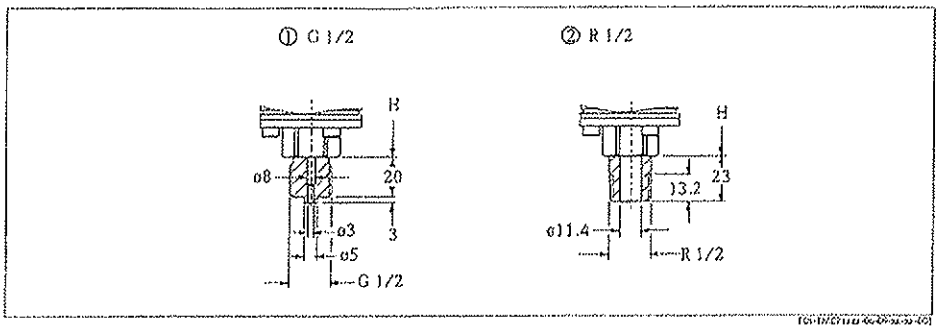

Process connections PMC71, thread JIS
→ Installation height see table below.

1 Version GL: thread JIS B0202 G 1/2 (male), material: AISI 316L/1.4435; Weight: 0.63 kg (1.4 lb)
2 Version RL: thread JIS B0203 R 1/2 (male), material: AISI 316L/1.4435; Weight: 0.63 kg (1.4 lb)

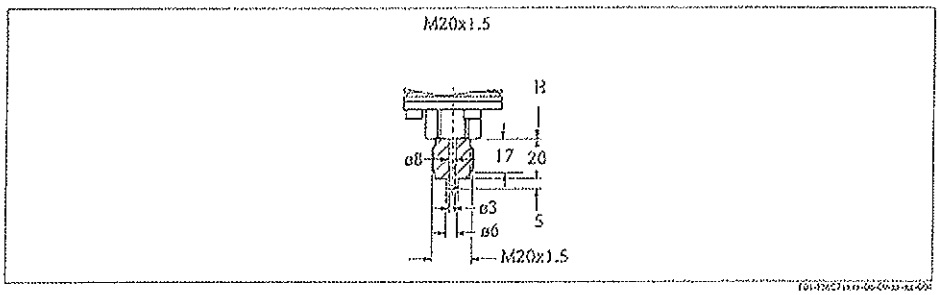

Process connections PMC71 thread DIN 13 M 20x1.5 hole 3 mm
Material version GP: AISI 316L/1.4435, version GQ: Alloy C276/2.4819
→ Installation height see table below; Weight: 0.63 kg (1.4 lb)

Installation height H for devices with thread connection and internal diaphragm

Description	Housing T14	Housing T17
PMC71	155 mm (6.10")	171 mm (6.73")
PMC71 with EEx d[ia], CSA XP or FM XP	225 mm (8.86")	241 mm (Ex d = 311 mm/12.2")
PMC71 High temperature version [1]	235 mm (9.25")	251 mm (9.88")
PMC 71 High temperature version [1] with EEx d[ia], CSA XP or FM XP	305 mm (12.0")	321 mm (Ex d = 391 mm/15.4")

1) High temperature version, see also page 77, feature 100 "Additional options 1" and feature 110 "Additional options 2", versions "T"

Thread, flush-mounted diaphragm

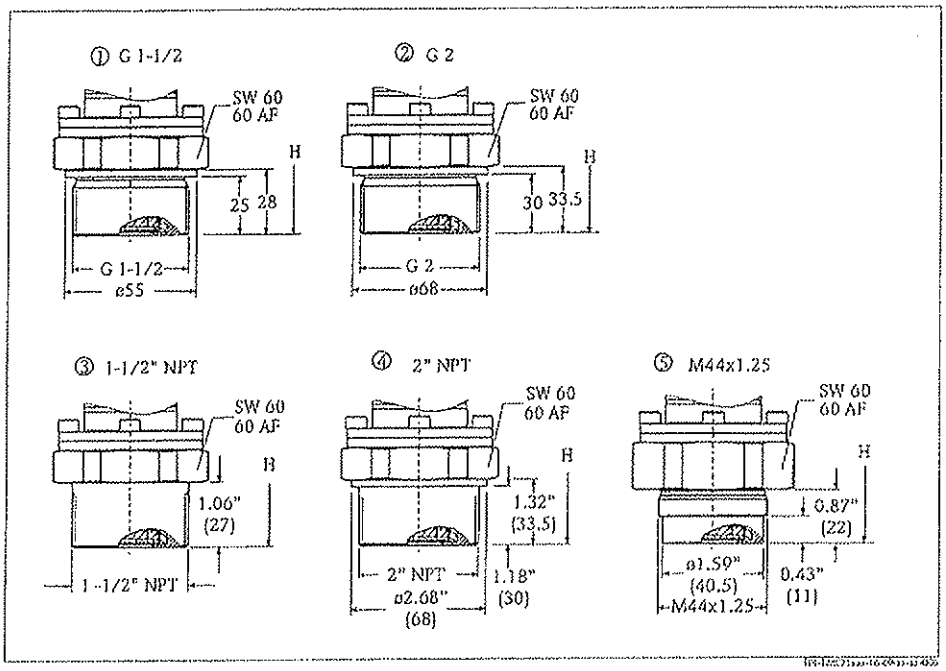

Process connections PMC71,
→ Installation height see table below.

1 Thread ISO 228 G 1 1/2 A: Material version 1G: AISI 316L/1.4435, version 1H: Alloy C276/2.4819, version 1J: Monel; Weight: 0.63 kg (1.4 lb)
2 Thread ISO 228 G 2 A: Material version 1K: AISI 316L/1.4435, version 1L: Alloy C276/2.4819, version 1M: Monel; Weight: 0.63 kg (1.4 lb)
3 Thread ANSI 1 1/2 MNPT: Material version 2D: AISI 316L/1.4435, version 2E: Alloy C276/2.4819, version 2F: Monel; Weight: 0.63 kg (1.4 lb)
4 Thread ANSI 2 MNPT: Material version 2G: AISI 316L/1.4435, version 2H: Alloy C276/2.4819, version 2J: Monel; Weight: 0.63 kg (1.4 lb)
5 Thread DIN 13 M 44x1.25: Material version 1R: AISI 316L/1.4435, version 1S: Alloy C276/2.4819; Weight: 0.63 kg (1.4 lb)

Installation height H for devices with thread connection and flush-mounted diaphragm

Description	Housing T14	Housing T17
PMC71	215 mm (8.46")	231 mm (9.09")
PMC71 with EEx d[ia], CSA XP or FM XP	280 mm (11.0")	296 mm (11.7")

EN/DIN flanges, connection dimensions as per EN 1092-1/DIN 2527

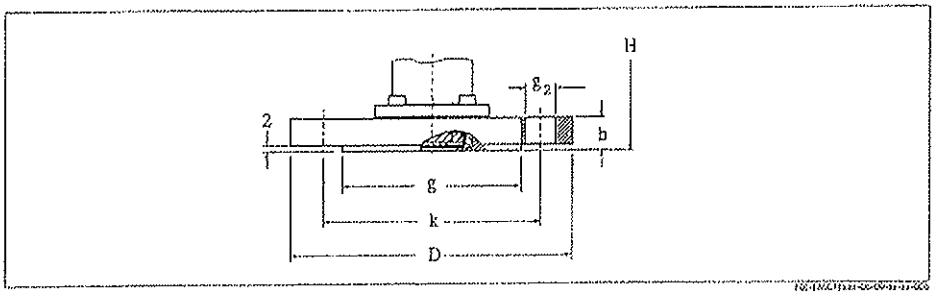

Process connection PMC71, EN/DIN flange with raised face (flush-mounted diaphragm)
→ Installation height see page 40.

	Flange[1]							Bolt holes			
Version	Material	Nominal diameter	Nominal pressure	Shape [2]	Diameter D [mm]	Thickness b [mm]	Raised face g [mm]	Quantity	Diameter g_2 [mm]	Bolt circle k [mm]	Flange weight [3] [kg]
CP	AISI 316L	DN 32	PN 10-40	B1 (D)	140	18	77	4	18	100	1.9
CQ	AISI 316L	DN 40	PN 10-40	B1 (D)	150	18	87	4	18	110	2.2
BR	PVDF [4]	DN 50	PN 10-16	B1 (D)	165	21.4	102	4	18	125	0.6
B3	AISI 316L	DN 50	PN 10-40	B1 (D)	165	20	102	4	18	125	3.0
C3	AISI 316L	DN 50	PN 63	B2 (D)	180	26	108	4	22	135	4.6
BS	PVDF [4]	DN 80	PN 10/16	B1 (D)	200	21.4	138	8	18	160	1.0
B4	AISI 316L	DN 80	PN 10-40	B1 (D)	200	24	138	8	18	160	5.4

1) The roughness of the surface in contact with the medium, including the sealing surface of the flanges (all standards), made of Hastelloy C, Monel or Tantalum is Ra 0.8. Lower surface roughness on request.

2) Designation in brackets as per DIN 2527

3) Housing weight see page 63

4) Max.: 15 bar (225 psi), max.: −10 to +60°C (+14 to +140°F)

ANSI flange, connection dimensions as per ANSI B 16.5, raised face RF

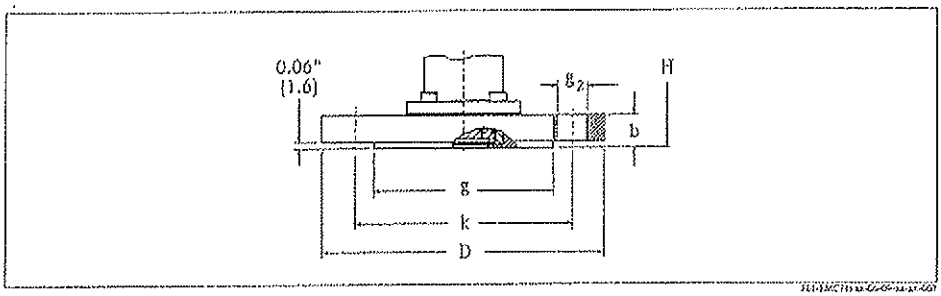

Process connection PMC71, ANSI flange with raised face (flush-mounted diaphragm)
→ Installation height see page 40.

	Flange [1]						Bolt holes			
Version	Material	Nominal diameter inches	Class [lb./sq.in]	Diameter D inches (mm)	Thickness b inches (mm)	Raised face g inches (mm)	Quantity	Diameter g_2 inches (mm)	Bolt circle k inches (mm)	Flange weight [2] lbs (kg)
AE	AISI 316/316L [3]	1 1/2	150	5 (127)	0.69 (17.5)	2.88 (73.2)	4	0.62 (15.7)	3.88 (98.6)	2.2 (1.0)
AQ	AISI 316/316L [3]	1 1/2	300	6.12 (155.4)	0.81 (20.6)	2.88 (73.2)	4	0.88 (22.4)	4.5 (114.3)	5.7 (2.6)
AF	AISI 316/316L [3]	2	150	6 (152.4)	0.75 (19.1)	3.62 (91.9)	4	0.75 (19.1)	4.75 (120.7)	5.3 (2.4)
JR	ECTFE [4]	2	150	6 (152.4)	0.75 (19.1)	3.62 (91.9)	4	0.75 (19.1)	4.75 (120.7)	5.3 (2.4)
A3	PVDF [5]	2	150	6 (152.4)	0.75 (19.1)	3.62 (91.9)	4	0.75 (19.1)	4.75 (120.7)	1.1 (0.5)
AR	AISI 316/316L [3]	2	300	6.5 (165.1)	0.88 (22.4)	3.62 (91.9)	8	0.75 (19.1)	5 (127)	7.1 (3.2)
AG	AISI 316/316L [3]	3	150	7.5 (190.5)	0.94 (23.9)	5 (127)	4	0.75 (19.1)	6 (152.4)	10.8 (4.9)
JS	ECTFE [4]	3	150	7.5 (190.5)	0.94 (23.9)	5 (127)	4	0.75 (19.1)	6 (152.4)	10.8 (4.9)
A4	PVDF [5]	3	150	7.5 (190.5)	0.94 (23.9)	5 (127)	4	0.75 (19.1)	6 (152.4)	2.0 (0.9)
AS	AISI 316/316L [3]	3	300	8.25 (209.5)	1.12 (28.4)	5 (127)	8	0.88 (22.4)	6.62 (168.1)	15 (6.8)
AH	AISI 316/316L [3]	3	150	9 (228.6)	0.94 (23.9)	6.19 (157.2)	8	0.75 (19.1)	7.5 (190.5)	16 (7.1)
JT	ECTFE [4]	4	150	9 (228.6)	0.94 (23.9)	6.19 (157.2)	8	0.75 (19.1)	7.5 (190.5)	16 (7.1)
AT	AISI 316/316L [3]	4	300	10 (254)	1.25 (31.8)	6.19 (157.2)	8	0.88 (22.4)	7.88 (200.2)	26 (11.6)

1) The roughness of the surface in contact with the medium, including the sealing surface of the flanges (all standards), made of Hastelloy C, Monel or Tantalum is Ra 0.8. Lower surface roughness on request.

2) Housing weight see page 63

3) Combination of AISI 316 SS for required pressure resistance and AISI 316L SS for required chemical resistance (dual rated)

4) ECTFE coating on AISI 316L SS/1.4435
When operating in hazardous area, avoid electrostatic charge of the plastic surface.

5) max.: 15 bar (225 psi), max.: −10 to +60°C (+14 to +140°F)

JIS flange, connection dimensions as per JIS B 2220 BL, raised face RF

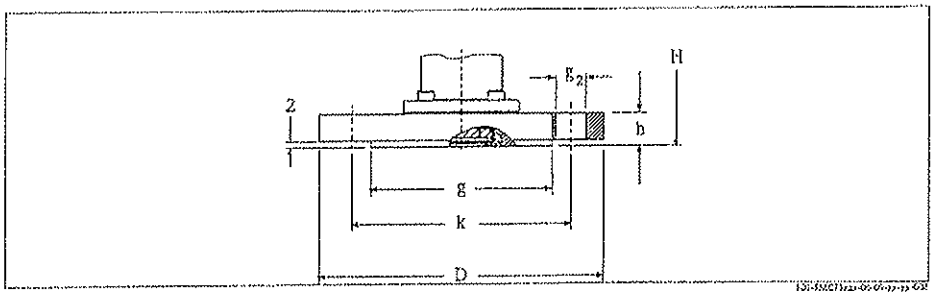

Process connection PMC71, JIS flange with raised face RF (flush-mounted diaphragm), AISI 316L/1.4435
→ Installation height see table below.

	Flange [1]					Bolt holes			
Versions	Nominal dimension	Nominal pressure	Diameter D [mm]	Thickness b [mm]	Raised face g [mm]	Quantity	Diameter g_2 [mm]	Bolt circle k [mm]	Flange weight [2] [kg]
KF	50 A	10 K	155	16	96	4	19	120	2.0
KL	80 A	10 K	185	18	127	8	19	150	3.3
KH	100 A	10 K	210	18	151	8	19	175	4.4

1) The roughness of the surface in contact with the medium, including the sealing surface of the flanges (all standards), made of Hastelloy C, Monel or Tantalum is Ra 0.8. Lower surface roughness on request.

2) Housing weight see page 63

Installation height H for devices with flange

Description	T14 housing	T17 housing
PMC71	215 mm (8.46")	231 mm (9.09")
PMC71 with EEx d(ia), CSA XP or FM XP	280 mm (11.0")	296 mm (11.7")

Hygienic connections, flush-mounted diaphragm

Note!
Many process connections with an EPDM or HNBR seal are in accordance with the 3A-sanitary standard approved for PMC71. This means that a 3A-approved process connection in combination with an EPDM or HNBR seal must be selected when ordering for the 3A approval for the PMC71 version to be valid. → For ordering information on EPDM or HNBR seals, see page 76 "Ordering information PMC71", feature 80 "Sensor seal", version B or F.

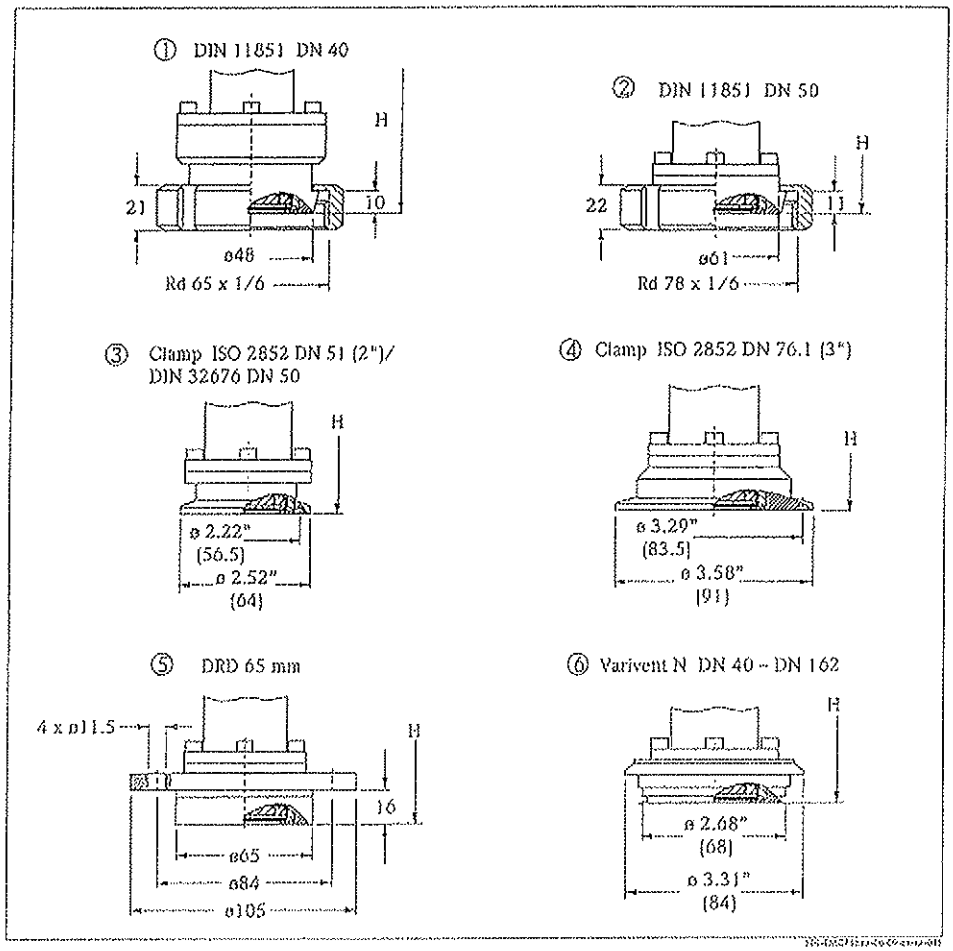

Process connections PMC71, Hygienic connections, material AISI 316L/1.4435
surface roughness of the surfaces in contact with the medium ≤ 0.8 µm as standard. Lower surface roughness on request.

1 Version MP: DIN 11851 DN 40 PN 25, 3-A with HNBR or EPDM seal
2 Version MR: DIN 11851 DN 50 PN 25, 3-A with HNBR or EPDM seal
3 Version TD: Tri-Clamp ISO 2852 (2"), DIN 32675 DN 50, 3-A with HNBR or EPDM seal
4 Version TF: Tri-Clamp ISO 2852 (3"), 3-A with HNBR or EPDM seal
5 Version TK: DRD DN50 (65 mm) PN 25, 3-A with HNBR or EPDM seal
6 Version TR: Varivent Type N for pipes 40 – 162, PN 40, 3-A with HNBR or EPDM seal

Installation height H for devices with hygienic connection and flush-mounted diaphragm

Description	T14 housing	T17 housing
PMC71	215 mm (8.46")	231 mm (9.09")
PMC71 with EEx d[ia], CSA XP or FM XP	280 mm (11.0")	296 mm (11.7")

Process connections PMP71 (with metallic measuring diaphragm)

Note!
Some device versions have CRN approval. For a CRN-approved device, a CRN-approved process connection (→ see page 75, feature 70 "Process connection") has to be ordered with a CSA approval (→ see page 74, feature 10 "Approval"). These devices are fitted with a separate plate bearing the registration number 0F10525.5C.

Thread, internal diaphragm

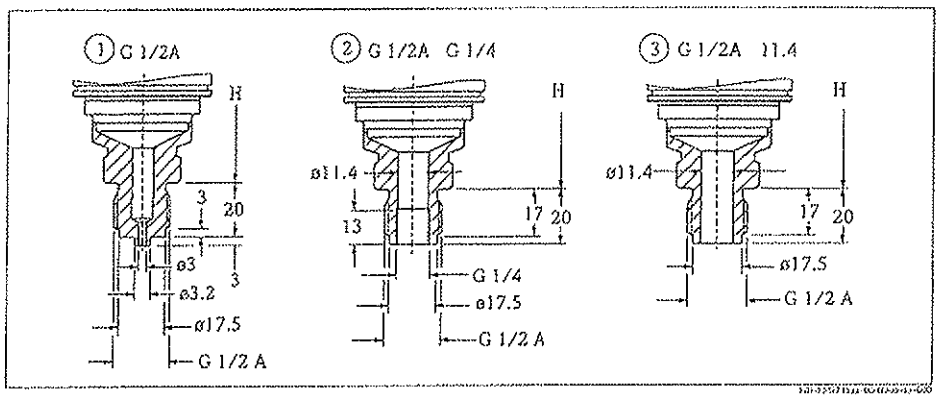

Process connections PMP71, thread ISO 228
→ Installation height H see page 43.

1 Thread ISO 228 G 1/2 A EN 837;
Material version GA: AISI 316L/1.4435, version GB: Alloy C276/2.4819; Weight: 0.6 kg (1.3 lb)
2 Thread ISO 228 G 1/2 A G 1/4 (female);
Material version GE: AISI 316L/1.4435, version GF: Alloy C276/2.4819; Weight: 0.6 kg (1.3 lb)
3 Thread ISO 228 G 1/2 A hole 11.4 mm (0.45");
Material version GH: AISI 316L/1.4435, version GJ: Alloy C276/2.4819; Weight: 0.6 kg (1.3 lb)

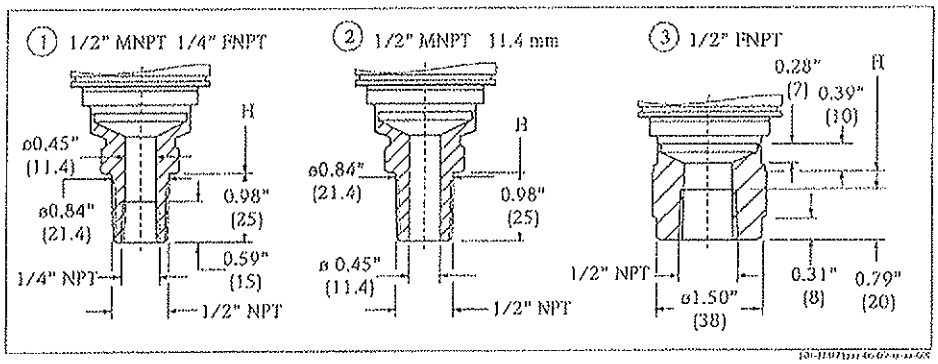

Process connections PMP71, thread ANSI
→ Installation height see page 43.

1 Thread ANSI 1/2 MNPT 1/4 FNPT;
Material version RA: AISI 316L/1.4435, version RB: Alloy C276/2.4819; Weight: 0.6 kg (1.3 lb)
2 Thread ANSI 1/2 MNPT; hole: 400 bar (6000 psi) = 11.4 mm (0.45"), 700 bar (10,150 psi) = 3.2 mm (0.13")
Material version RD: AISI 316L/1.4435, version RE: Alloy C276/2.4819; Weight: 0.6 kg (1.3 lb)
3 Thread ANSI 1/2 FNPT;
Material version RH: AISI 316L/1.4435, version RJ: Alloy C276/2.4819; Weight: 0.6 kg (1.3 lb)

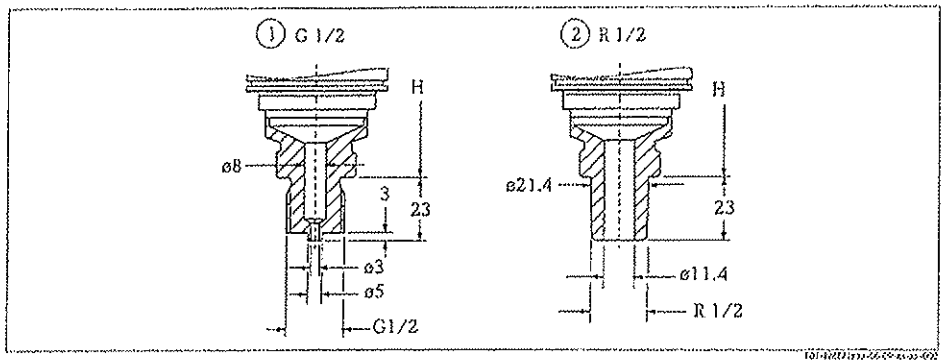

Process connections PMP71, thread JIS
→ Installation height H see table, below.

1 Version GL: thread JIS B0202 G 1/2 (male), material: AISI 316L/1.4435; Weight: 0.6 kg (1.3 lb)
2 Version RL: thread JIS B0203 R 1/2 (male), material: AISI 316L/1.4435; Weight: 0.6 kg (1.3 lb)

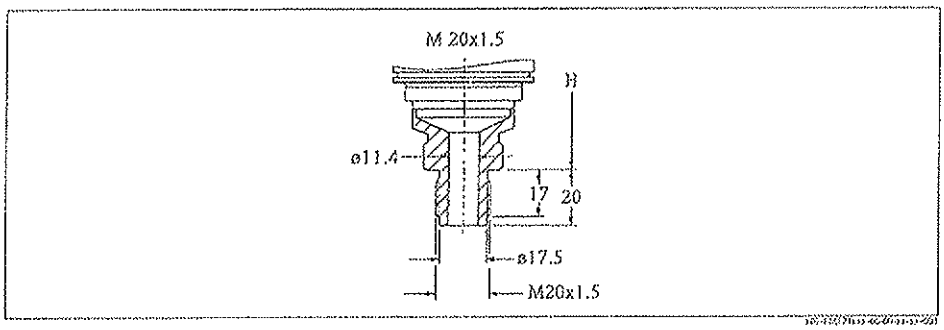

Process connections PMP71 thread DIN 13 M 20x1.5 hole 11.4 mm (0.45")
Material version GP: AISI 316L/1.4435, version GQ: Alloy C276/2.4819; Weight: 0.6 kg (1.3 lb)
→ Installation height H see table, below.

Installation height H for devices with thread connection and internal flush-mounted diaphragm

	T14 housing	T17 housing
Height H	165 mm (6.50")	181 mm (7.13")
	Note! The versions with 700 bar (10,150 psi) sensor are approx. 20 mm (0.79") higher.	

Thread, flush-mounted diaphragm

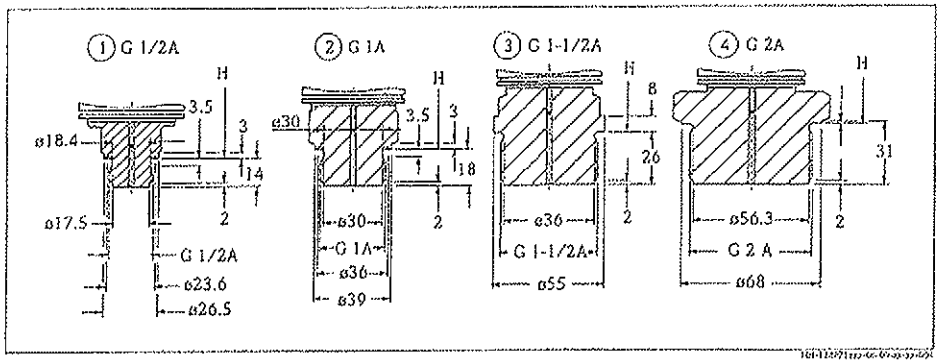

Process connections PMP71, thread ISO 228
→ Installation height see page 45.

1 Thread ISO 228 G 1/2 A DIN 3852;
Material version 1A: AISI 316L/1.4435, version 1B: Alloy C276/2.4819; Weight: 0.4 kg (0.9 lb)
2 Thread ISO 228 G 1 A;
Material version 1D: AISI 316L/1.4435, version 1E: Alloy C276/2.4819; Weight: 0.7 kg (1.5 lb)
3 Thread ISO 228 G 1 1/2 A
Material version 1G: AISI 316L/1.4435, version 1H: Alloy C276/2.4819; Weight: 1.1 kg (2.4 lb)
4 Thread ISO 228 G 2 A
Material version 1K: AISI 316L/1.4435, version 1L: Alloy C276/2.4819; Weight: 1.5 kg (3.3 lb)

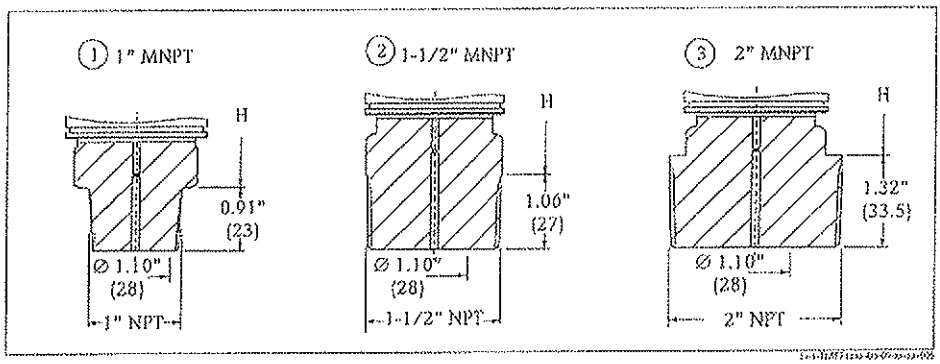

Process connections PMP71, thread ANSI
→ Installation height see page 45.

1 Thread ANSI 1 MNPT;
Material version 2A: AISI 316L/1.4435, version 2B: Alloy C276/2.4819; Weight: 0.7 kg (1.5 lb)
2 Thread ANSI 1 1/2 MNPT;
Material version 2D: AISI 316L/1.4435, version 2E: Alloy C276/2.4819; Weight: 1.0 kg (2.2 lb)
3 Thread ANSI 2 MNPT
Material version 2G: AISI 316L/1.4435, version 2H: Alloy C276/2.4819; Weight: 1.3 kg (2.9 lb)

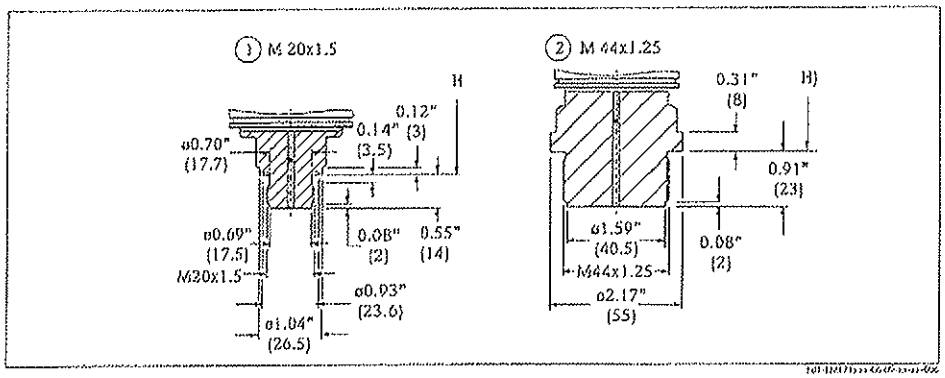

Process connections PMP71, thread DIN
→ Installation height see table, below.

1 Thread DIN 16288 M20;
Material version 1N: AISI 316L/1.4435, version 1P: Alloy C276/2.4819; Weight: 0.4 kg (0.9 lb)

2 Thread DIN 13 M 44 x 1.25;
Material version 1R: AISI 316L/1.4435, version 1S: Alloy C276/2.4819; Weight: 1.1 kg (2.4 lb)

Installation height H for devices with thread connection and flush-mounted diaphragm

Description	Housing T14	Housing T17
G 1/2	163 mm	179 mm
G 1	167 mm	183 mm
G 1 1/2 A	163 mm	179 mm
G 2 A	162 mm	178 mm
1 MNPT	162 mm (6.38")	178 mm (7.01")
1 1/2 MNPT	165 mm (6.50")	181 mm (7.13")
2 MNPT	159 mm (6.26")	175 mm (6.89")
M 20x1.5	163 mm	179 mm
M 44x1.25	170 mm	186 mm

EN/DIN flanges, connection dimensions as per EN 1092-1/DIN 2527

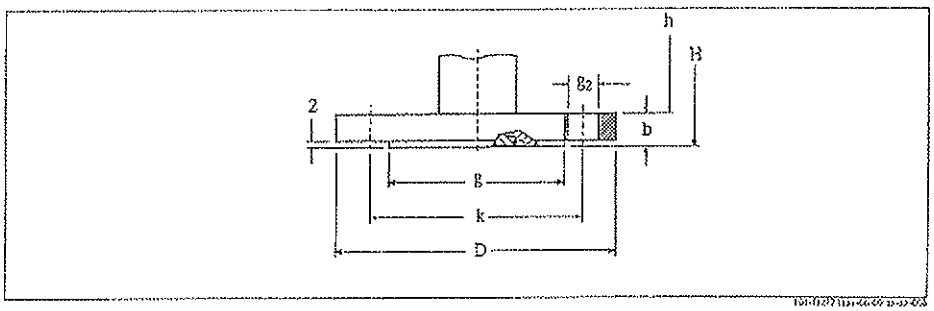

Process connection PMP71, EN/DIN flange with raised face, material AISI 316L.

H: device height = height of device without flange h + flange thickness b
→ Height h see page 47.

	Flange [1]						Bolt holes			
Version	Nominal diameter	Nominal pressure	Shape [2]	Diameter D [mm]	Thickness b [mm]	Raised face g [mm]	Quantity	Diameter g_2 [mm]	Bolt circle k [mm]	Flange weight [3] [kg]
CN	DN 25	PN 10-40	B1 (D)	115	18	66 [4]	4	14	85	1.2
CP	DN 32	PN 10-40	B1 (D)	140	18	77 [4]	4	18	100	1.9
CQ	DN 40	PN 10-40	B1 (D)	150	18	87 [4]	4	18	110	2.2
B3	DN 50	PN 10-40	B1 (D)	165	20	102	4	18	125	3.0
B4	DN 80	PN 10-40	B1 (D)	200	24	138	8	18	160	5.3

1) The roughness of the surface in contact with the medium, including the sealing surface of the flanges (all standards), made of Hastelloy C, Monel or Tantalum is Ra 0.8. Lower surface roughness on request.

2) Designation as per DIN 2527 in brackets

3) Housing weight see page 63

4) With these process connections the sealing surface is smaller than described in the standard. To achieve sufficient sealing, a flat seal with a thickness < 2mm has to be selected. For further information please contact your local Endress+Hauser Sales Center.

ANSI flanges, connection dimensions as per ANSI B 16.5, raised face RF
JIS flanges, connection dimensions as per B 2220 BL, Raised face RF

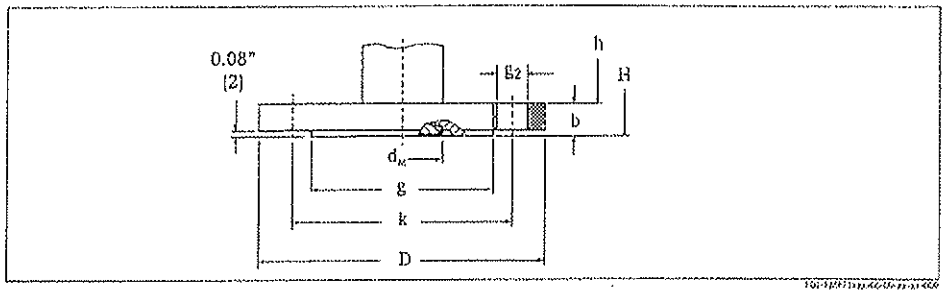

Process connection PMP71, ANSI flange or JIS flange with raised face RF; material

H: device height = height of device without flange h + flange thickness b. For the height h see table bottom of page.

	Flange [1]							Bolt holes			
Version	Material	Nom. dia. inches	Class/ Nominal pressure	Diameter D inch (mm)	Thickness b inch (mm)	Diameter raised face g inch (mm)	Height raised face f inch (mm)	Quantity	Diameter g_2 inch (mm)	Bolt circle k inch (mm)	Flange weight [2] lb (kg)
ANSI flange											
AN	AISI 316/316L [3]	1	300 lb./sq.in	4.88 (124)	0.69 (17.5)	2 [4] (50.8)	0.06 (1.6)	4	0.75 (19.1)	3.5 (88.9)	2.9 (1.3)
AE	AISI 316/316L [3]	1 1/2	150 lb./sq.in	5 (127)	0.69 (17.5)	2.88 [4] (73.2)	0.06 (1.6)	4	0.62 (15.7)	3.88 (98.6)	3.3 (1.5)
AQ	AISI 316/316L [3]	1 1/2	300 lb./sq.in	6.12 (155.4)	0.81 (20.6)	2.88 [4] (73.2)	0.06 (1.6)	4	0.88 (22.4)	4.5 (114.3)	5.7 (2.6)
AF	AISI 316/316L [3]	2	150 lb./sq.in	6 (152.4)	0.75 (19.1)	3.62 (91.9)	0.06 (1.6)	4	0.75 (19.1)	4.75 (120.7)	5.3 (2.4)
AR	AISI 316/316L [3]	2	300 lb./sq.in	7.5 (190.5)	0.88 (22.3)	3.62 (91.9)	0.06 (1.6)	8	0.75 (19.1)	5 (127)	7.1 (3.2)
AG	AISI 316/316L [3]	3	150 lb./sq.in	7.5 (190.5)	0.94 (23.9)	5 (127)	0.06 (1.6)	4	0.75 (19.1)	6 (152.4)	10.8 (4.9)
AS	AISI 316/316L [3]	3	300 lb./sq.in	8.25 (209.5)	1.12 (28.4)	5 (127)	0.06 (1.6)	8	0.88 (22.4)	6.62 (168.1)	14.8 (6.7)
AH	AISI 316/316L [3]	4	150 lb./sq.in	9 (228.6)	0.94 (23.9)	6.19 (157.2)	0.06 (1.6)	8	0.75 (19.1)	7.5 (190.5)	15.6 (7.1)
AT	AISI 316/316L [3]	4	300 lb./sq.in	10 (254)	1.25 (31.8)	6.19 (157.2)	0.06 (1.6)	8	0.88 (22.4)	7.88 (200.2)	25.6 (11.6)
JIS flange											
KA	AISI 316L [5]	25 A	20 K	125 mm	16 mm	67 mm	1 mm	4	19 mm	90 mm	1.5 kg
KF	AISI 316L [4]	50 A	10 K	155 mm	16 mm	96 mm	2 mm	4	19 mm	120 mm	2.0 kg
KL	AISI 316L [4]	80 A	10 K	185 mm	18 mm	127 mm	2 mm	8	19 mm	150 mm	3.3 kg
KH	AISI 316L [4]	100 A	10 K	210 mm	18 mm	151 mm	2 mm	8	19 mm	175 mm	4.4 kg

1) The roughness of the surface in contact with the medium, including the sealing surface of the flanges (all standards), made of Hastelloy C, Monel or Tantalum is Ra 0.8. Lower surface roughness on request.

2) Housing weight see page 63

3) Combination of AISI 316 for required pressure resistance and AISI 316L for required chemical resistance (dual rated)

4) With these process connections the sealing surface is smaller than described in the standard. To achieve sufficient sealing, a flat seal with a thickness < 2mm has to be selected. For further information please contact your local Endress+Hauser Sales Center.

5) AISI 316L/1.4435

Height h for devices with flange

	T14 housing	T17 housing
Height h	165 mm (6.50")	181 mm (7.13")

Oval flange

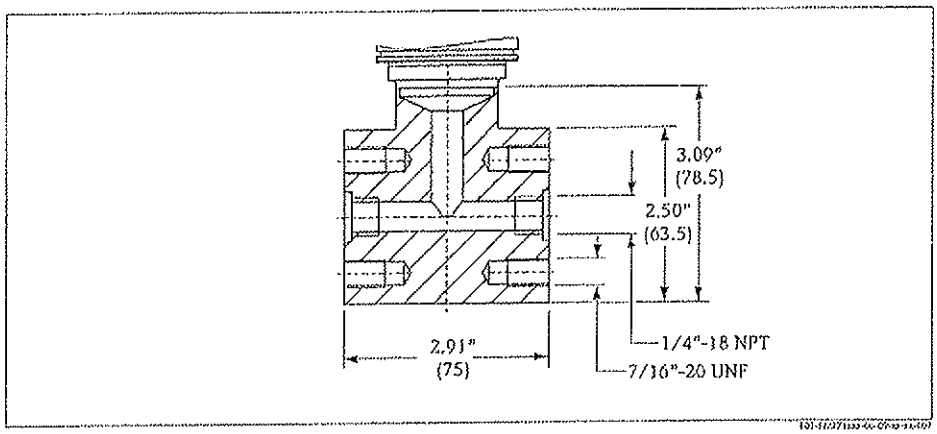

Version UR: oval flange adapter 1/4-18 NPT according to IEC 61518, mounting: 7/16-20 UNF; Weight: 1.9 kg (4.2 lb)

Prepared for diaphragm seal mount

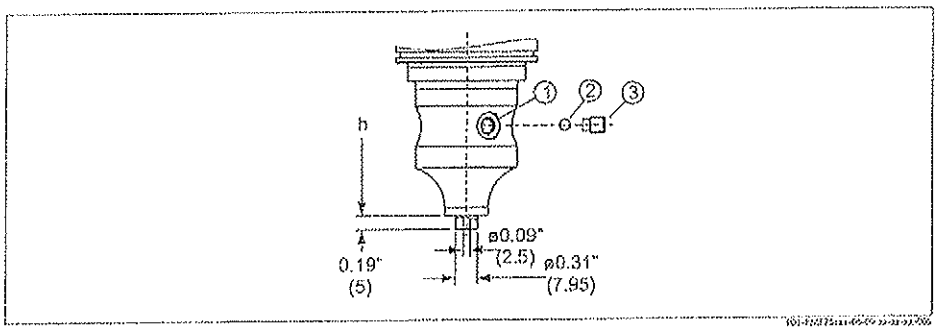

Version U1: prepared for diaphragm seal mount

1 Hole for filling fluid
2 Bearing
3 Threaded pin with an internal hexagon 4 mm

	T14 housing	T17 housing
Height h	190 mm (7.48")	204 mm (8.03")

PMP75 Basic unit

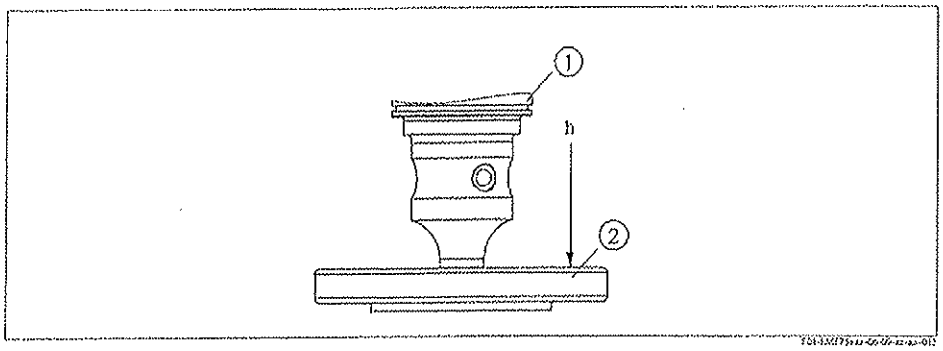

PMP75 Basic unit with diaphragm seal

1 PMP75 Basic unit
2 Diaphragm seal, here e.g. flange diaphragm seal

	T14 housing	T17 housing
Height	190 mm (7.48")	204 mm (8.03")

Process connections PMP75 (with metallic measuring diaphragm)

Note!

- Some device versions have CRN approval. For a CRN-approved device, a CRN-approved process connection (→ see page 83, feature 70 "Process connection") has to be ordered with a CSA approval (→ see page 82, feature 10 "Approval"). Devices with capillary are not CRN-approved. These devices are fitted with a separate plate bearing the registration number 0F10525.5C.
- Specifications for the "T_K Process" are listed in the following tables. These are typical values. The temperature coefficients apply to silicone oil and the membrane material AISI 316L/1.4435. For other filling oils, this temperature coefficient must be multiplied by the T_K correction factor of the corresponding filling oil. For the T_K correction factors, see page 66, section "Diaphragm seal filling oils".
- With regard to the temperature coefficient "T_K Ambient", devices with a temperature isolator behave like devices with the same process connection with 0.1 m capillary.
- In addition, the temperature coefficient "T_K Ambient" is listed in relation to the capillary length for the diaphragm seal versions which can be supplied with capillaries as standard. This information is found on page 67 ff, section "Influence of the temperature on the zero point".
- The weights of the diaphragm seals are given in the tables. See page 63 for the weight of the housing.
- The following drawings are drawings that illustrate how the system works in principle. In other words, the dimensions of a diaphragm seal supplied can deviate from the dimensions given in this document.

Thread, flush-mounted diaphragm

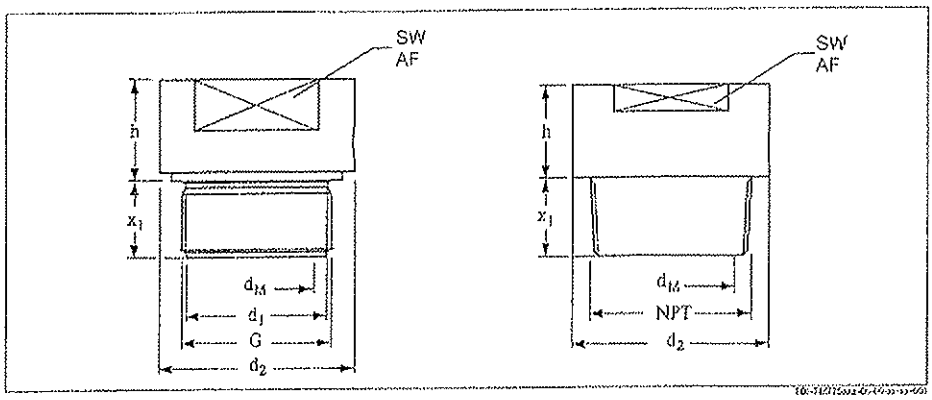

Process connections PMP75, left: thread ISO 228, right: thread ANSI

Threaded connection								Diaphragm seal					
Version	Material [1]	Thread	Nominal pressure PN	Diameter d_1 (mm)	Diameter d_2 (mm)	Screw-in length x_1 (mm)	Across flats SW/AF	max. Diaphragm diameter d_M (mm)	T_K Ambient ≤ 40 bar	T_K Ambient > 40 bar (mbar/10 K)	T_K Process	Height h (mm)	Diaphragm seal weight (kg)
1D	AISI 316L	G 1 A	400	30	39	21 [2]	41	30	+16.03	+24.33	+4.70	19	0.4
1E	Alloy C276								–	–	–		0.5
1G	AISI 316L	G 1 1/2 A	400	44	55	30	50	42	+5.4	+8.18	+3.50	20	0.9
1H	Alloy C276								–	–	–		1.0
1K	AISI 316L	G 2	400	56	68	30	65	50	+1.76	+2.68	+1.60	20	1.9
1L	Alloy C276								–	–	–		2.1
2A	AISI 316L	1 MNPT	6000 psi	–	1.89" (48)	1.10" (28)	41	0.94" (24)	+15.66	+24.42	+8.50	1.46" (37)	1.3 lbs
2B	Alloy C276								–	–	–		1.5 lbs
2D	AISI 316L	1 1/2 MNPT	6000 psi	–	1.97" (52)	1.18" (30)	46	1.42" (36)	+8.14	+12.39	+3.90	0.79" (20)	2.0 lbs
2E	Alloy C276								–	–	–		2.2 lbs
2G	AISI 316L	2 MNPT	6000 psi	–	3.07" (78)	1.18" (30)	65	1.50" (38)	+5.4	+8.18	+2.59	1.38" (35)	4.0 lbs
2H	Alloy C276								–	–	–		4.4 lbs

1) AISI 316L/1.4435; Alloy C276/2.4819

2) 28 mm (1.1") in conjuction with high temperature oil

Note!
With the use of high temperature oils the design can deviate strongly.
For further information please contact your local Endress+Hauser Sales Center.

Tri-Clamp ISO 2852

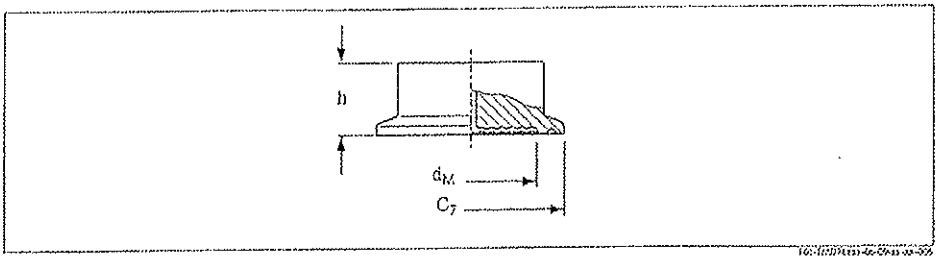

Process connection PMP75, material: AISI 316L/1.4435, surface roughness of the surfaces in contact with the medium R_a ≤ 0.8 µm as standard. Lower surface roughness on request.

Version	Nominal diameter ISO 2852	Nominal diameter DIN 32676	Nominal diameter [in]	Diameter C_7 in (mm)	max. Diaphragm diameter d_M in (mm)	Height h in (mm)	T_K Ambient ≤ 40 bar [mbar/10 K]	T_K Ambient > 40 bar [mbar/10 K]	T_K Process [mbar/10 K]	Diaphragm seal weight lbs (kg)
TB	DN 25	DN 25	1	2.0 (50.5)	0.94 (24)	1.46 (37)	+15.33	+24.0	+4.25	3.7 (0.32)
TC [1]	DN 38	DN 40	1 1/2	2.0 (50.5)	1.34 (34)	1.18 (30)	+8.14	+12.39	+1.91	2.2 (1.0)
TD [1]	DN 51	DN 50	2	2.5 (64)	1.89 (48)	1.18 (30)	+3.45	+4.81	+1.25	2.4 (1.1)
TF	DN 76.1	–	3	3.6 (91)	2.87 (73)	1.18 (30)	+0.3	+0.35	+0.18	2.6 (1.2)

1) Diaphragm seal versions in conformity with ASME-BPE for use in biochemical processes, wetted surfaces R_a ≤ 0.4 µm (15.75 µin; 180 grit), electropolished; to be ordered using feature 60 "Additional option", version "P" in the order code

Tri-Clamp pipe diaphragm seal ISO 2852

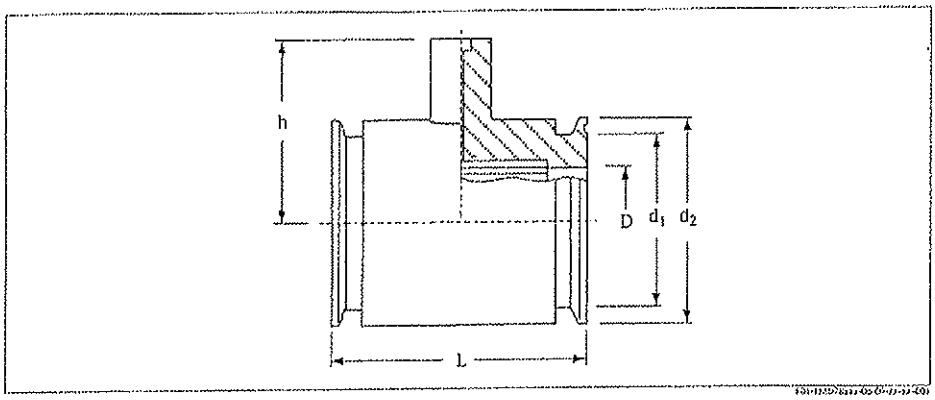

Process connection PMP75, material AISI 316L, surface roughness of the surfaces in contact with the medium $R_a \leq 0.8$ µm as standard. Lower surface roughness on request.

Version	Nominal diameter ISO 2852	Nominal diameter	Diameter D [in]	Diameter d_1 in (mm)	Diameter d_2 in (mm)	Height h in (mm)	Face-to-face-length L in (mm)	T_K Ambient ≤ 40 bar	T_K Ambient > 40 bar	T_K Process	Diaphragm seal weight lbs (kg)
								[mbar/10 K]			
SB	DN 25	1	0.98 (22.5)	1.71 (43.5)	2.0 (50.5)	2.64 (67)	126	+7.75	+8.69	+4.49	3.7 (1.7)
SC [1]	DN 38	1 1/2	1.40 (35.5)	1.71 (43.5)	2.0 (50.5)	2.64 (67)	126	+5.17	+5.69	+3.46	2.2 (1.0)
SD [1]	DN 51	2	1.91 (48.6)	2.22 (56.5)	2.5 (64)	3.11 (79)	100	+3.56	+3.91	+2.69	3.7 (1.7)

1) Including 3.1 and pressure test as per Pressure Equipment Directive, category II

Varivent N for pipes DN 40 – DN 162

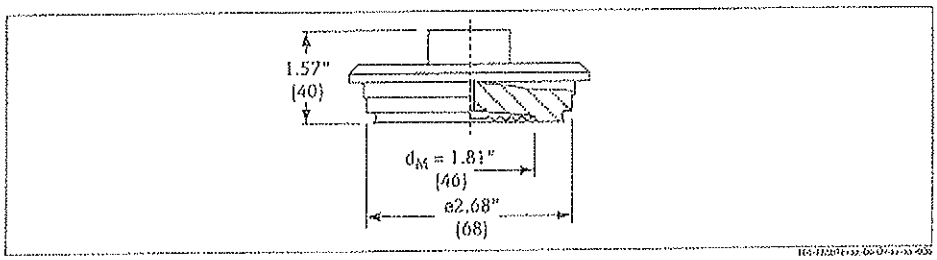

Process connection PMP75, surface roughness of the surfaces in contact with the medium $R_a \leq 0.8$ µm as standard. Lower surface roughness on request.

Version	Material	Nominal pressure	T_K Ambient ≤ 40 bar	T_K Ambient > 40 bar	T_K Process	Diaphragm seal weight
			[mbar/10 K]			
TR [1]	AISI 316L SS/ 1.4435	PN 40 (600 psi)	+2.26	+3.11	+1.65	2.9 lbs (1.3 kg)

1) Diaphragm seal versions in conformity with ASME-BPE for use in biochemical processes, wetted surfaces $R_a \leq 0.4$ µm (15.75 µin; 180 grit), electropolished; to be ordered using feature 60 "Additional option", version "P" in the order code

DRD DN50 (65 mm)

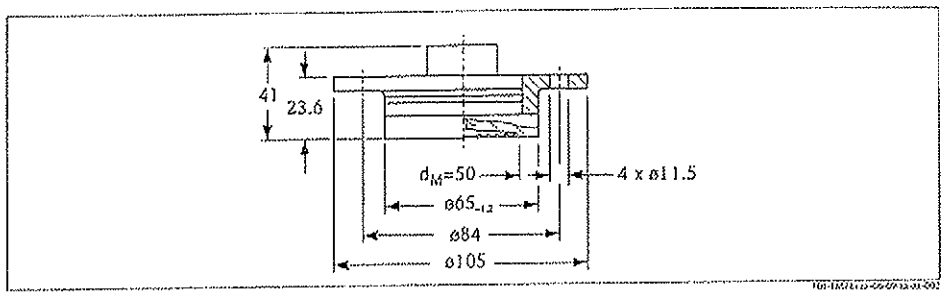

Process connection PMP75, surface roughness of the surfaces in contact with the medium $R_a \leq 0.8$ µm as standard. Lower surface roughness on request.

Version	Material	Nominal pressure	T_K Ambient ≤ 40 bar	T_K Ambient > 40 bar	T_K Process	Diaphragm seal weight
			[mbar/10 K]			[kg]
TK	AISI 316L/ 1.4435	PN 25	+2.26	+3.11	+1.65	0,75

SMS nozzles with coupling nut

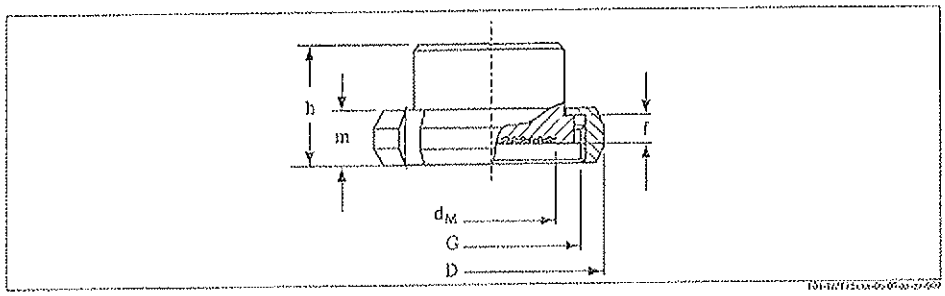

Process connection PMP75, material AISI 316L/1.4435, surface roughness of the surfaces in contact with the medium $R_a \leq 0.8$ µm as standard. Lower surface roughness on request.

Version	Nominal diameter	Nominal pressure	Diameter D	Adapter height f	Thread G	Height m	Height h	max. diaphragm diameter d_M	T_K Ambient ≤ 40 bar	T_K Ambient > 40 bar	T_K Process	Weight diaphragm seal
	[inch]	[bar]	[mm]	[mm]		[mm]	[mm]	[mm]	[mbar/10 K]			[kg]
TC	1	PN 25	54	3,5	Rd 40 – 1/6	20	42.5	24	+15.66	+24.22	+7.25	0.25
TH	1 1/2	PN 25	74	4	Rd 60 – 1/6	25	57	36	+8.18	+12.39	+2.59	0.65
TI	2	PN 25	84	4	Rd 70 – 1/6	26	62	48	+5.4	+8.18	+1.10	1.05

APV-RJT nozzles with coupling nut

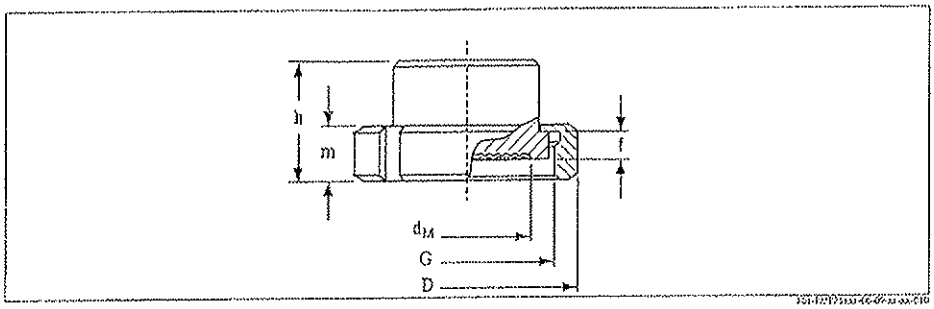

Process connection PMP75, material AISI 316L SS/1.4435, surface roughness of the surfaces in contact with the medium $R_a \leq 0.8$ µm as standard. Lower surface roughness on request.

Version	Nominal diameter	Nominal pressure	Diameter	Adapter height	Thread	Height	Height	max. diaphragm diameter	T_K Ambient ≤ 40 bar	T_K Ambient > 40 bar	T_K Process	Weight diaphragm seal
		PN	D	f	G	m	h	d_M				
	inch	psi	in (mm)	in (mm)		in (mm)	in (mm)	in (mm)	[mbar/10 K]			lbs (kg)
TL	1	600	3.03 (77)	0.26 (6.5)	1 13/16 – 1/8"	0.87 (22)	1.7 (42.6)	0.83 (21)	+15.66	+24.42	+4.21	1 (0.45)
TM	1 1/2	600	2.83 (72)	0.25 (6.4)	2 5/16 – 1/8"	0.87 (22)	1.7 (42.6)	1.10 (28)	+8.18	+12.39	+2.59	2 (0.75)
TN	2	600	3.39 (86)	0.25 (6.4)	2 7/8 – 1/8"	0.87 (22)	1.7 (42.6)	1.50 (38)	+5.4	+8.18	+1.76	3 (1.2)

APV-ISS nozzles with coupling nut

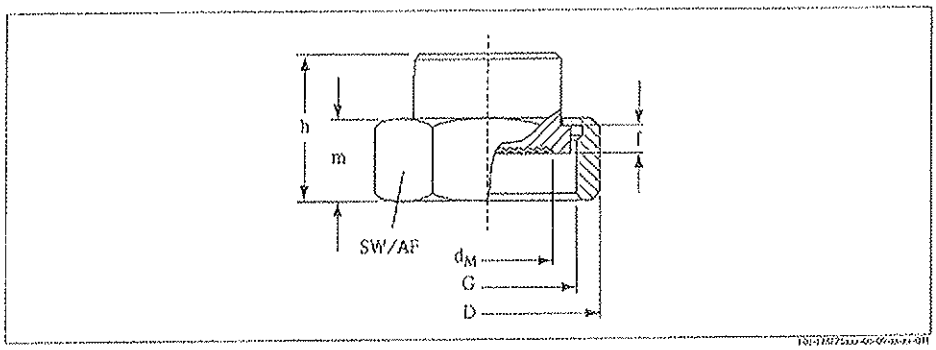

Process connection PMP75, material AISI 316L SS/1.4435, surface roughness of the surfaces in contact with the medium $R_a \leq 0.8$ µm as standard. Lower surface roughness on request.

Version	Nominal diameter	Nominal pressure	Diameter	Adapter height	Thread	Height	Across flat	Height	max. diaphragm seal	T_K Ambient ≤ 40 bar	T_K Ambient > 40 bar	T_K Process	Weight Diaphragm seal
			D	f	G	m	AF	h	d_M				
	(inch)	psi	in (mm)	in (mm)		in (mm)		in (mm)	in (mm)	[mbar/10 K]			lb (kg)
TP	1	600	2.13 (54.1)	0.16 (4)	1 1/2" – 1/8"	1.18 (30)	46.8	1.97 (50)	0.94 (24)	+15.66	+24.42	+4.21	1 (0.4)
TQ	1 1/2	600	2.83 (72)	0.16 (4)	2" – 1/8"	1.18 (30)	62	1.97 (50)	1.34 (34)	+8.14	+12.39	+2.59	1.3 (0.6)
TS	2	600	3.50 (89)	0.16 (4)	2 1/2" – 1/8"	1.18 (30)	77	1.97 (50)	1.77 (45)	+5.4	+8.18	+1.76	2.4 (1.1)

Taper adapter with coupling nut, DIN 11851

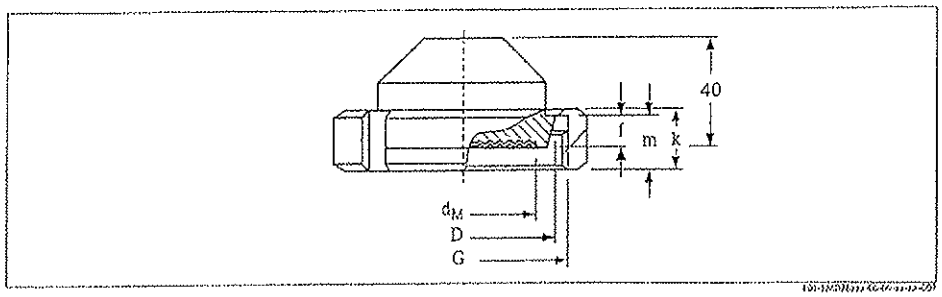

Process connection PMP75, material AISI 316L SS/1.4435, surface roughness of the surfaces in contact with the medium $R_a \leq 0.8$ µm as standard. Lower surface roughness on request.

	Taper adapter				Slotted nut			Diaphragm seal				
Version	Nominal diameter	Nominal pressure	Diameter D [mm]	Adapter height f [mm]	Thread G	Height k [mm]	Height m [mm]	max. Diaphragm diameter d_M [mm]	T_K Ambient ≤ 40 bar [mbar/10 K]	T_K Ambient > 40 bar [mbar/10 K]	T_K Process [mbar/10 K]	Diaphragm seal weight [kg]
MR	DN 50	PN 25	68.5	11	Rd 78 x 1/6"	22	19	52	+2.21	+3.02	+1.40	1.1
MS	DN 65	PN 25	86	12	Rd 95 x 1/6"	35	21	66	+1.6	+2.1	+0.60	2.0
MT	DN 80	PN 25	100	12	Rd 110 x 1/4"	30	26	81	+0.66	+0.81	+0.40	2.55

Threaded adapter, DIN 11851

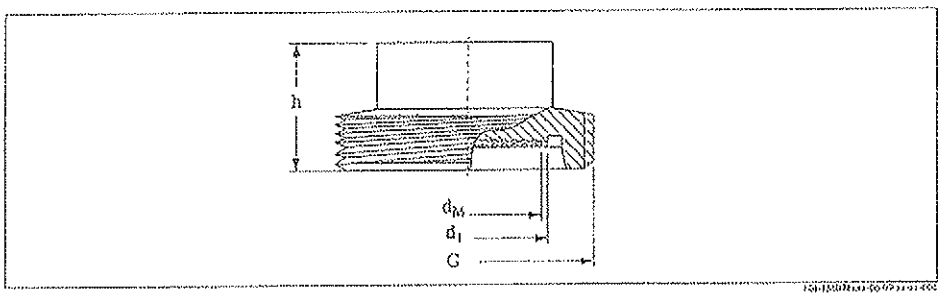

Process connection PMP75, material AISI 316L SS/1.4435, surface roughness of the surfaces in contact with the medium $R_a \leq 0.8$ µm as standard. Lower surface roughness on request.

	Threaded adapter					Diaphragm seal				
Version	Nominal diameter	Nominal pressure	Diameter d_1 [mm]	Thread G	Height h [mm]	max. Diaphragm diameter d_M [mm]	T_K Ambient ≤ 40 bar [mbar/10 K]	T_K Ambient > 40 bar [mbar/10 K]	T_K Process [mbar/10 K]	Diaphragm seal weight [kg]
M3	DN 50	PN 25	54	Rd 78 x 1/6"	35	52	+2.21	+3.02	+0.88	0.9
M4	DN 65	PN 25	71	Rd 95 x 1/6"	40	66	+1.6	+2.1	+0.60	1.7
M5	DN 80	PN 25	85	Rd 110 x 1/4"	40	81	+0.66	+0.81	+0.40	2.0

EN/DIN flanges, connection dimensions as per EN 1092-1/DIN 2527 and DIN 2501-1

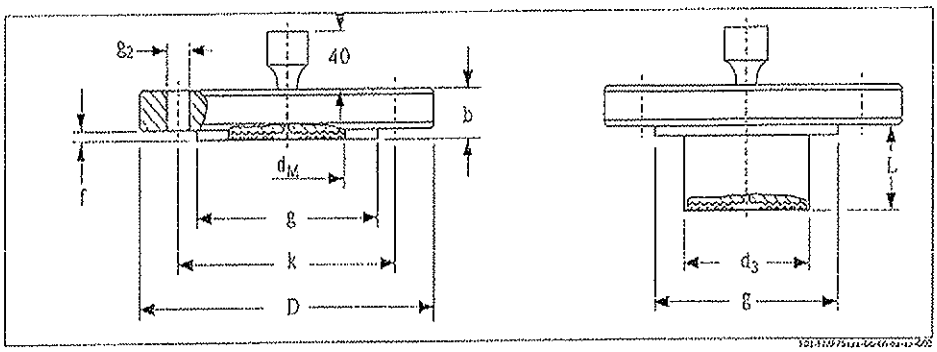

Process connection PMP75, EN/DIN flange with flush-mounted diaphragm, material AISI 316L

	Flange [1]							Bolt holes			Diaphragm seal				
Version	Nominal diameter	Nominal pressure	Shape [2]	Diameter D [mm]	Thickness b [mm]	Raised face g [mm]	Raised face f [mm]	Quantity	Diameter g_2 [mm]	Bolt circle k [mm]	max. Diaphragm diameter d_M [mm]	T_K Ambient ≤ 40 bar [mbar/10 K]	T_K Ambient > 40 bar [mbar/10 K]	T_K Process [mbar/10 K]	Diaphragm seal weight [kg]
CN	DN 25	PN 10-40	B1 (D)	115	18	66	3	4	14	85	32	+16.03	+24.33	+3.20	2.1
DN	DN 25	PN 63-160	E	140	24	68	2	4	18	100	28	+16.03	+24.33	+3.20	2.5
EN	DN 25	PN 250	E	150	28	68	2	4	22	105	28	+16.03	+24.33	+5.17	3.7
EI	DN 25	PN 400	E	180	38	68	2	4	26	130	28	+16.03	+24.33	+5.17	7.0
CP	DN 32	PN 10-40	B1 (D)	140	18	77	2.6	4	18	100	34	+8.14	+12.39	+2.59	1.9
CQ	DN 40	PN 10-40	B1 (D)	150	18	87	2.6	4	18	110	48	+5.40	+8.18	+2.15	2.2
B3	DN 50	PN 10-40	B1 (D)	165	26	102	3	4	18	125	59	+2.21	+3.02	+1.50	3.0
C3	DN 50	PN 63	B2 (E)	180	26	102	3	4	22	135	59	+2.21	+3.02	+1.00	4.6
EF	DN 50	PN 100/160	E	195	30	102	3	4	26	145	59	+2.21	+3.02	+1.00	6.2
ER	DN 50	PN 250	E	200	38	102	3	8	26	150	59	+2.21	+3.02	+1.15	7.7
E3	DN 50	PN 400	E	235	52	102	3	8	30	180	59	+2.21	+3.02	+1.15	14.7
B4	DN 80	PN 10-40	B1 (D)	200	24	138	3.5	8	18	160	89	+0.19	+0.25	+0.20	5.3
C4	DN 80	PN 100	B2 (E)	230	32	138	4	8	24	180	89	+0.19	+0.25	+0.35	8.9
C5	DN 100	PN 100	B2 (E)	265	36	175	5	8	30	210	89	+0.19	+0.25	+0.11	13.7
D3 [3]	DN 50	PN 10-40	B1 (D)	165	20	102	3	4	18	125	47	+3.45	+4.81	+1.67	[3]
D4 [3]	DN 80	PN 10-40	B1 (D)	200	24	138	3.5	8	18	160	72	+0.19	+0.25	+0.70	[3]

1) The roughness of the surface in contact with the medium, including the sealing surface of the flanges (all standards), made of Hastelloy C, Monel or Tantalum is Ra 0.8. Lower surface roughness on request.

2) Designation as per DIN 2527 in brackets

3) 50 mm, 100 mm or 200 mm extension selectable, for extension diameter and weight see the following table

Version	Nominal diameter	Nominal pressure	Extension length [mm]	Extension diameter d_3 [mm]	Diaphragm seal weight [kg]
D3	DN 50	PN 10-40	50 / 100 / 200	48.3	3.2 / 3.8 / 4.4
D4	DN 80	PN 10-40	50 /100 / 200	76	6.2 / 6.7 / 7.8

ANSI flanges, connection dimensions as per ANSI B 16.5, raised face RF

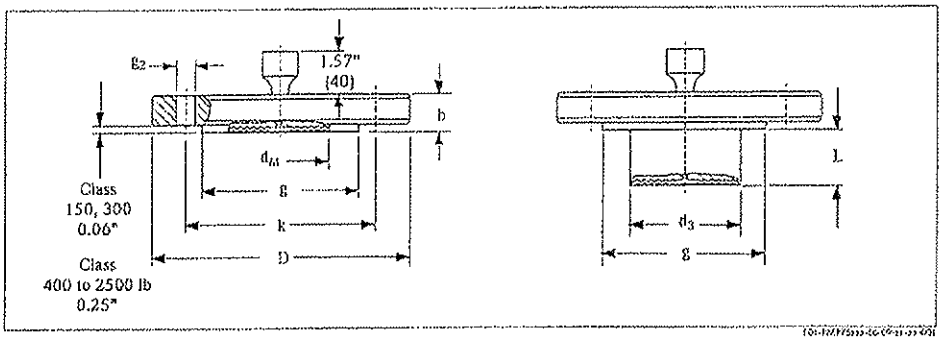

Process connection PMP75, ANSI flange with and without extended diaphragm seal

	Flange [1]						Bolt holes			Diaphragm seal				
Version	Material [2]	Nominal diameter	Class	Diameter	Thickness	Raised face	Quantity	Diameter	Bolt circle	max. Diaphragm diameter	T_K Ambient ≤ 40 bar	T_K Ambient > 40 bar	T_K Process	Diaphragm seal weight
				D	b	g		g_2	k	d_M				
		inches	[lb./sq.in]	in (mm)	in (mm)	in (mm)		in (mm)	in (mm)	in (mm)	[mbar/10 K]			lbs (kg)
AC	AISI 316/ 316L	1	150	4.25 (108)	0.56 (14.2)	2 (50.8)	4	0.62 (15.7)	3.12 (79.2)	1.26 (32)	+16.03	+24.33	+3.65	2.6 (1.2)
AN	AISI 316/ 316L	1	300	4.88 (124)	0.69 (17.5)	2 (50.8)	4	0.75 (19.1)	3.5 (88.9)	1.26 (32)	+16.03	+24.33	+3,65	2.9 (1.3)
HC	AISI 316/ 316L	1	400/ 600	4.88 (124)	0.69 (17.5)	2 (50.8)	4	0.75 (19.1)	3.5 (88.9)	1.2)6 (32	+16.03	+24.33	+5.17	3.1 (1.4)
HN	AISI 316/ 316L	1	900/ 1500	5.88 (149.4)	1.12 (28.4)	2 (50.8)	4	1 (25.4)	4 (101.6)	1.26 (32)	+16.03	+24.33	+5.17	7 (3.2)
HO	AISI 316/ 316L	1	2500	6.25 (158.8)	1.38 (35.1)	2 (50.8)	4	1 (25.4)	4.25 (108)	1.26 (32)	+16.03	+24.33	+5.17	10 (4.6)
AE	AISI 316/ 316L	1 1/2	150	5 (127)	0.69 (17.5)	2.88 (73.2)	4	0.62 (15.7)	3.88 (96.6)	1.89 (48)	+8.14	+12.39	+1.90	3.3 (1.5)
AQ	AISI 316/ 316L	1 1/2	300	6.12 (155.4)	0.81 (20.6)	2.88 (73.2)	4	0.88 (22.4)	4.5 (114.3)	1.89 (48)	+8.14	+12.39	+2.59	5.7 (2.6)
AF	AISI 316/ 316L	2	150	6 (152.4)	0.75 (19.1)	3.62 (91.9)	4	0.75 (19.1)	4.75 (120.7)	2.32 (59)	+2.21	+3.02	+1.60	4.9 (2.2)
J3 [3]	AISI 316/ 316L	2	150	6 (152.4)	0.75 (19.1)	3.62 (91.9)	4	0.75 (19.1)	4.75 (120.7)	1.85 (47)	+3.45	+4.81	+1.67	[5]
AR	AISI 316/ 316L	2	300	6.5 (165.1)	0.88 (22.4)	3.62 (91.9)	8	0.75 (19.1)	5 (127)	2.32 (59)	+2.21	+3.02	+0.85	7.5 (3.4)
HF	AISI 316/ 316L	2	400/ 600	6.5 (165.1)	1 (25.4)	3.62 (91.9)	8	0.75 (19.1)	5 (127)	2.32 (59)	+2.21	+3.02	+0.85	9.5 (4.3)
HR	AISI 316/ 316L	2	900/ 1500	8.5 (215.9)	1.5 (38.1)	(3.62) (91.9)	8	1 (25.4)	6.5 (165.1)	2.32 (59)	+2.21	+3.02	+0.75	23 (10.3)
H3	AISI 316/ 316L	2	2500	9.25 (235)	2 (50.8)	3.62 (91.9)	8	1.12 (28.4)	6.75 (171.5)	2.32 (59)	+2.21	+3.02	+0.75	35 (15.8)
AG	AISI 316/ 316L	3	150	7.5 (190.5)	0.94 (23.9)	5 (127)	4	0.75 (19.1)	6 (152.4)	3.50 (89)	+0.19	+0.25	+0.18	11.2 (5.1)
AS	AISI 316/ 316L	3	300	8.25 (209.5)	1.12 (28.4)	5 (127)	8	0.75 (19.1)	6 (152.4)	3.5 (89)	+0.19	+0.25	+0.11	15.4 (7.0)

	Flange [1]						Bolt holes			Diaphragm seal				
Version	Material [2]	Nominal diameter	Class	Diameter	Thickness	Raised face	Quantity	Diameter	Bolt circle	max. Diaphragm diameter	T_K Ambient ≤ 40 bar	T_K Ambient > 40 bar	T_K Process	Diaphragm seal weight
				D	b	g		g_2	k	d_M				
		inches	[lb./sq.in]	in (mm)	in (mm)	in (mm)		in (mm)	in (mm)	in (mm)	[mbar/10 K]			lbs (kg)
J4 [3]	AISI 316/ 316L	3	150	7.5 (190.5)	0.94 (23.9)	5 (127)	4	0.75 (19.1)	6 (152.4)	2.83 (72)	+0.19	+0.25	+0.70	[3]
J7 [3]	AISI 316/ 316L	3	300	8.25 (209.5)	1.12 (28.4)	5 (127)	8	0.88 (22.4)	6.62 (168.1)	2.83 (72)	+0.19	+0.25	+0.70	[3]
AH	AISI 316/ 316L	4	150	9 (228.6)	0.94 (23.9)	6.19 (157.2)	8	0.75 (19.1)	7.5 (190.5)	3.50 (89)	+0.19	+0.25	+0.33	17 (7.2)
AT	AISI 316/ 316L	4	300	10 (254)	1.25 (31.8)	6.19 (157.2)	8	0.88 (22.4)	7.88 (200.2)	3.50 (89)	+0.19	+0.25	+0.11	26 (11.7)
J5 [3]	AISI 316/ 316L	4	150	9 (228.6)	0.94 (23.9)	6.19 (157.2)	8	0.75 (19.1)	7.5 (190.5)	3.50 (89)	+0.19	+0.25	+0.11	[3]
J8 [3]	AISI 316/ 316L	4	300	10 (254)	1.25 (31.8)	6.19 (157.2)	8	0.88 (22.4)	7.88 (200.2)	3.50 (89)	+0.19	+0.25	+0.11	[3]

1) The roughness of the surface in contact with the medium, including the sealing surface of the flanges (all standards), made of Hastelloy C, Monel or Tantalum is Ra 0.8. Lower surface roughness on request.

2) Combination of AISI 316 SS for required pressure resistance and AISI 316L SS for required chemical resistance (dual rated)

3) 2", 4", 6" or 8" extension selectable, for extension diameter and weight see the following table

Version	Nominal diameter	Class	Extension length (L)	Extension diameter	Diaphragm seal weight
	inches	[lb./sq.in]	in (mm)	in (mm)	lbs (kg)
J3	2	150	– 2 (50.8) – 4 (101.6) – 6 (152.4) – 8 (203.2)	1.9 (48.3)	– 6.6 (3.0) – 7.5 (3.4) – 8.6 (3.9) – 9.7 (4.4)
J4	3	150	– 2 (50.8) – 4 (101.6) – 6 (152.4) – 8 (203.2)	2.99 (75.9)	– 13.2 (6.0) – 14.6 (6.6) – 15.7 (7.1) – 17.2 (7.8)
J7	3	300	– 2 (50.8) – 4 (101.6) – 6 (152.4) – 8 (203.2)	2.99 (75.9)	– 17.4 (7.9) – 18.7 (8.5) – 19.8 (9.0) – 21.2 (9.6)
J5	4	150	– 2 (50.8) – 4 (101.6) – 6 (152.4) – 8 (203.2)	3.7 (94)	– 19.0 (8.6) – 21.8 (9.9) – 24.7 (11.2) – 27.3 (12.4)
J8	4	300	– 2 (50.8) – 4 (101.6) – 6 (152.4) – 8 (203.2)	3.7 (94)	– 28.9 (13.1) – 31.7 (14.4) – 34.6 (15.7) – 37.3 (16.9)

JIS flanges, connection dimensions as per JIS B 2220 BL, raised face RF

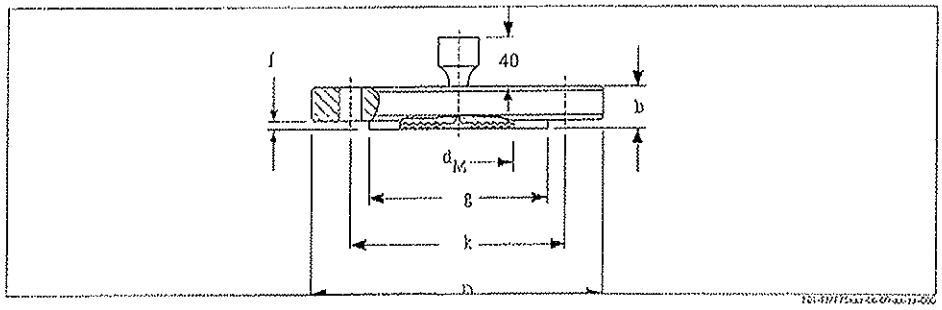

Process connection PMP75, JIS flange with raised face RF, material AISI 316L

	Flange [1]						Bolt holes			Diaphragm seal				
Version	Nominal diameter	Nominal pressure	Diameter D [mm]	Thickness b [mm]	Diameter raised face g [mm]	Height raised face f [mm]	Quantity	Diameter g_2 [mm]	Bolt circle k [mm]	max. Diaphragm diameter d_M [mm]	T_K Ambient ≤ 40 bar [mbar/10 K]	T_K Ambient > 40 bar [mbar/10 K]	T_K Process [mbar/10 K]	Diaphragm seal weight [2] [kg]
KC	25 A	10 K	125	14	67	1	4	19	90	32	+16.03	+24.33	+5.17	1.5
KF	50 A	10 K	155	16	96	2	4	19	120	59	+2.21	+3.02	+1.00	2.3
KL	80 A	10 K	185	18	127	2	8	19	150	89	+0.19	+0.25	+0.11	3.3
KH	100 A	10 K	210	18	151	2	8	19	175	89	+0.19	+0.25	+0.11	4.4

1) The roughness of the surface in contact with the medium, including the sealing surface of the flanges (all standards), made of Hastelloy C, Monel or Tantalum is Ra 0.8. Lower surface roughness on request.

2) Housing weight see page 63

Thread 1/2 NPT und 1 NPT, seperator

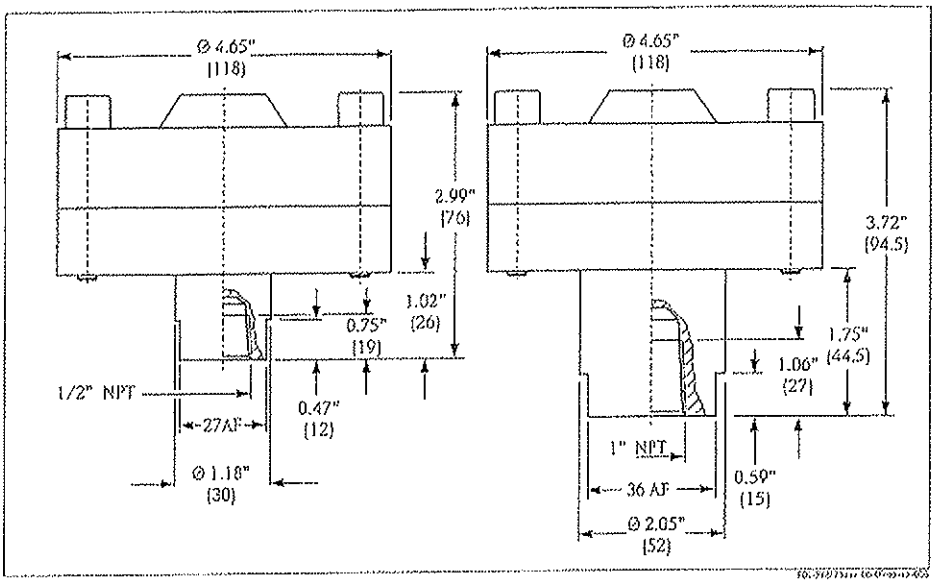

Process connection PMP75, versions "UG" and "UL", screwed, material AISI 316L SS, seal Viton

Version	Description	Nominal pressure	T_K Ambient	T_K Process	Diaphragm seal weight
			[mbar/10 K]		lbs [kg]
UG	1/2 NPT	3625 psi	+3.45	+1.28	10.5 [4.75]
UH	1 NPT	3625 psi	+3.45	+1.28	11.0 [5.0]

Thread ISO 228 G 1/2 A and ANSI 1/2 MNPT, seperator

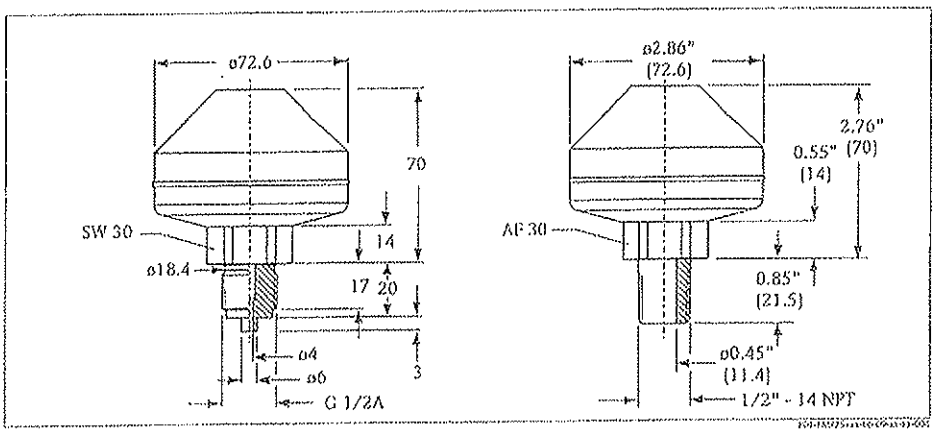

Process connection PMP75, versions "UA" and "UB", welded, material AISI 316L SS

Version	Description	Nominal pressure	T_K Ambient	T_K Process	Diaphragm seal weight
			[mbar/10 K]		lbs [kg]
UA	ISO 228 G 1/2 A	PN 160	+0.9	+0.30	3.2 [1.43]
UB	ANSI 1/2 MNPT	2320 psi	+0.9	+0.30	3.2 [1.43]

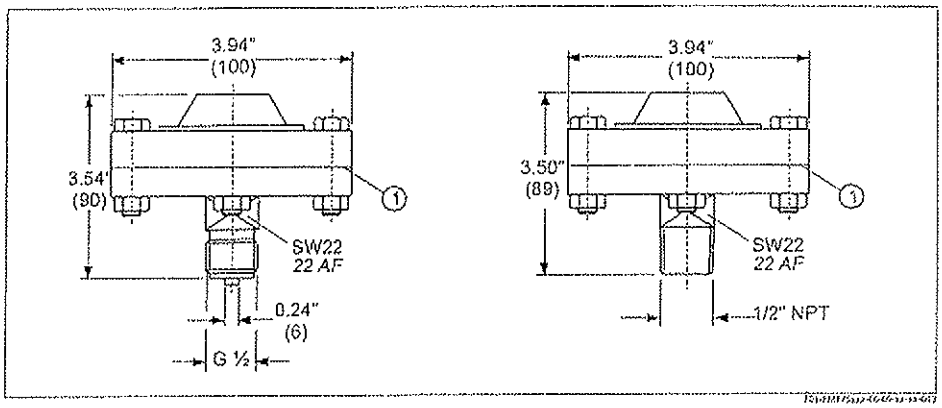

Process connection PMP75, left: version "UC" with threaded connection ISO 228 G 1/2 B, right: version "UD" with threaded connection ANSI 1/2 MNPT

1 PTFE seal as standard max. 260 °C/500 °F (higher temperatures on request)

Version	Measuring range	Description	Nominal pressure	T_K Process [mbar/10 K]	Diaphragm seal weight lbs (kg)
UC	≤ 40 bar	ISO 228 G 1/2 B	PN 40	+0.75	3.2 (1.43)
UD	≤ 600 psi	ANSI 1/2 MNPT	600 psi	+0.55	3.2 (1.43)

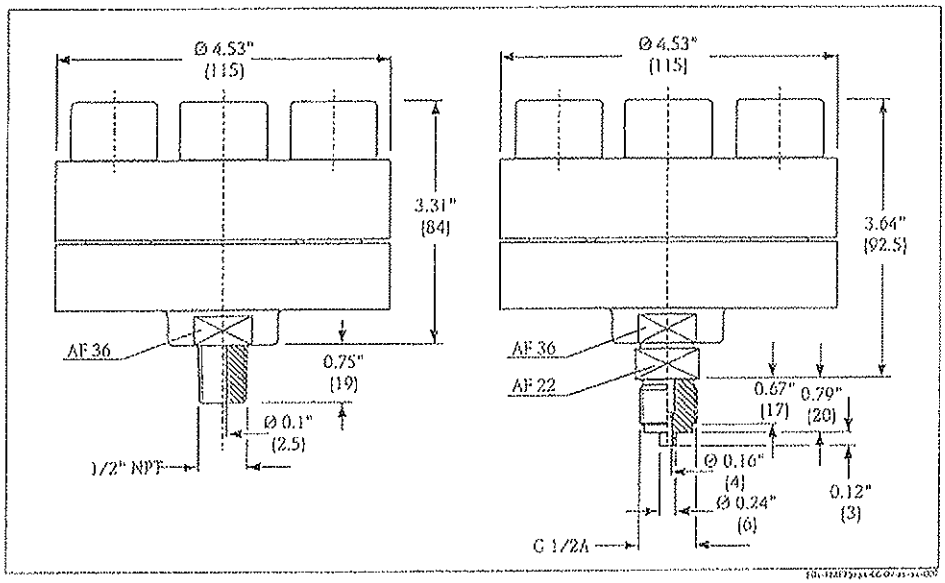

Process connection PMP75, versions "UC" and "UD", screwed, with integrated sealing lip, material AISI 316L SS

Version	Measuring range	Description	Nominal pressure	T_K Ambient [mbar/10 K]	T_K Process	Diaphragm seal weight lbs (kg)
UC	> 40 bar	ISO 228 G 1/2 A	PN 400	+3.45	+1.28	10.5 (4.75)
UD	> 600 psi	ANSI 1/2 MNPT	6000 psi	+3.45	+1.28	10.5 (4.75)

Note!
With the use of high temperature oils the design can deviate strongly.
For further information please contact your local Endress+Hauser Sales Center.

Remote version

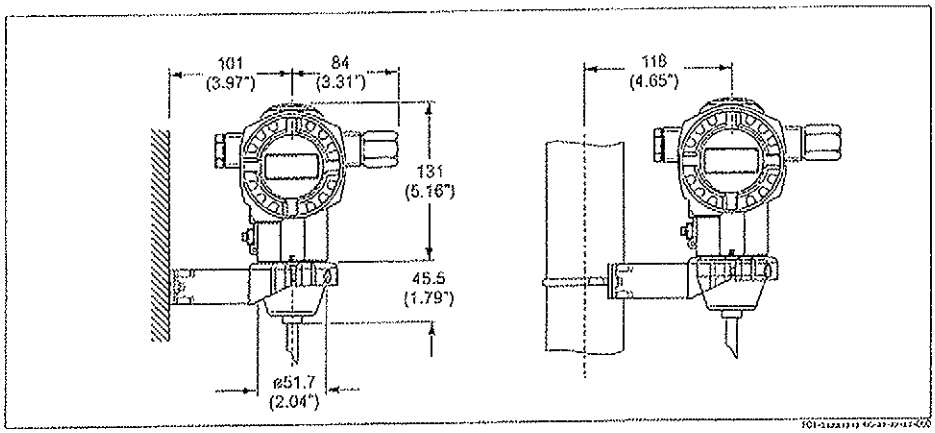

Dimensions T14 housing, optional display on the side. Housing weight see page 63.

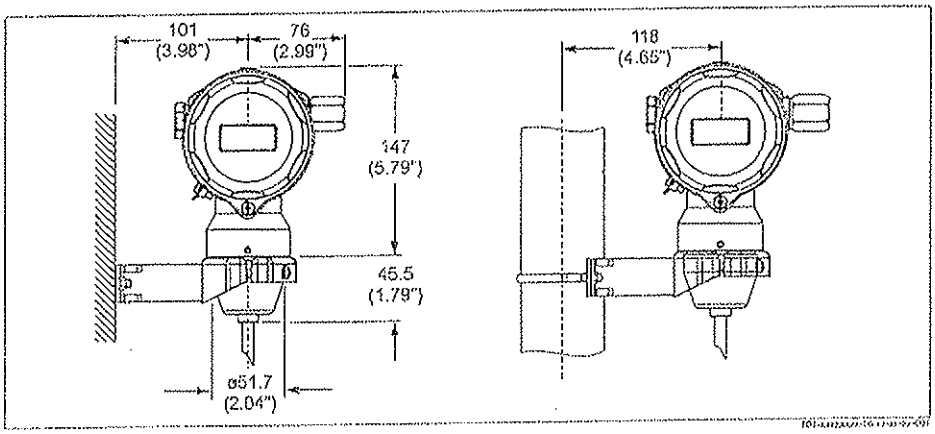

Dimensions T17 housing, optional display on the side. Housing weight see page 63.

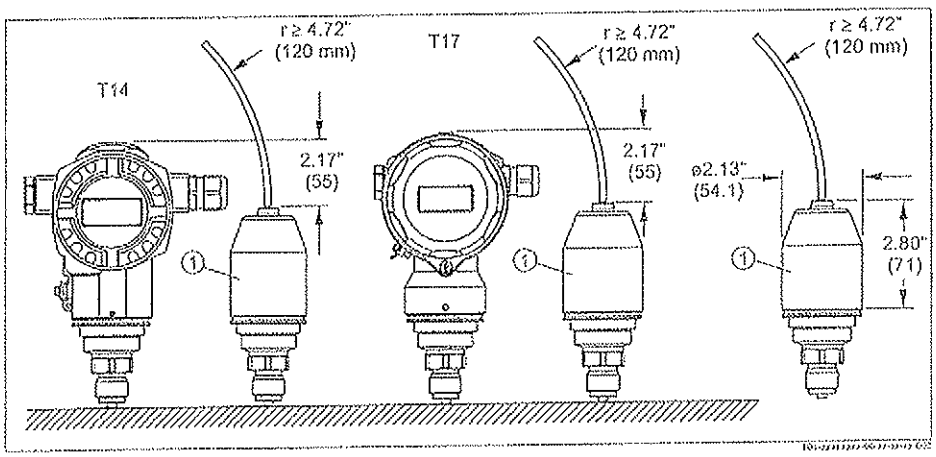

Reduction of the mounting height of the process connection, for application of the remote housing.
1 Process connection adapter.

If the remote housing is used, the mounting height of the process connection is reduced by approximately 2.17" (55 mm) as compared to the dimensions of the standard version.
The minimum bending radius (r) for the cable is 4.7" (120 mm).

Weight

Housing

	T14		T17	Separate housing
	Aluminum	AISI 316L SS	AISI 316L SS	
With electronic insert and local display	2.6 lb (1.2 kg)	4.6 lb (2.1 kg)	2.6 lb (1.2 kg)	Weight of housing T14 or T17 + 1.1 lb (0.5 kg) Weight of sensor + 1.1 lb (0.5 kg)
With electronic insert without local display	2.6 lb (1.1 kg)	4.4 lb (2.0 kg)	2.6 lb (1.1 kg)	

Process connections

- Process connections PMC71 (with ceramic measuring diaphragm): from page 35 ff
- Process connections PMP71 (with metallic measuring diaphragm): from page 42 ff
- Process connections PMP75 (with metallic measuring diaphragm): from page 49 ff

Material

T14 housing:
- T14 housing, selectable:
  - Die-cast aluminum with protective powder-coating on polyester basis: RAL 5012 (blue), cover: RAL 7035 (grey)
  - Precision cast stainless steel AISI 316L (1.4435)
- External operation (keys and key covering): Polycarbonate PC-FR, RAL 7035 (grey)
- Sight glass: Mineral glass
- Cable gland: Polyamid (PA)
- Pressure compensation filter: PA6 GF10
- Blind plug: PBT-GF30 FR, for Dust Ex, EEx d, FM XP and CSA XP: AISI 316L (1.4435)
- Seals:
  - Cable and blind plug seal: Silicone (VMQ)
  - Pressure compensation filter o-ring: Silicone (VMQ)
  - Cover: EPDM
  - Sight glass: Silicone (VMQ)
- Nameplates: AISI 304 (1.4301)

T17 housing:
- Housing: Stainless steel AISI 316L (1.4404)
- Sight glass:
  - Version for non-hazardous area, ATEX EEx ia, NEPSI Zone 0/1 Ex ia, IECEx Zone 0/1 Ex ia, FM NI, FM IS, CSA IS: Polycarbonate (PC)
  - ATEX 1/2 D, ATEX 1/3 D, ATEX 1 GD, ATEX 1/2 GD, ATEX 3 G, FM DIP, CSA Dust Ex: Mineral glass
- Cable gland: Polyamid PA, for Dust-Ex: CuZn nickel-plated
- Blind plug: PBT-GF30 FR, for Dust-Ex: AISI 316L (1.4435)
- Pressure compensation filter: PA6 GF10
- Seals:
  - Cable and blind plug seal: Silicone (VMQ)
  - Pressure compensation filter o-ring: Silicone (VMQ)
  - Cover: EPDM
  - Sight glass: EPDM
- Nameplates: lasered

DIN/EN flanges

Endress+Hauser supplies DIN/EN flanges made of stainless steel AISI 316L as per material numbers 1.4435 or 1.4404. With regard to their stability-temperature property, the materials 1.4435 and 1.4404 are grouped together under 13EO in EN 1092-1 Tab. 18. The chemical composition of the two materials can be identical.

Cable for remote housing:
- PE cable:
  Slip-resistant cable with strain-relief members made of Dynemo; shielded using aluminum-coated film; insulated with polyethylene (PE-LD), black; copper wires, twisted, UV resistant
- FEP cable:
  Slip-resistant cable; shielded using galvanized steel wire netting; insulated with fluorinated ethylene propylene (FEP), black; copper wires, twisted, UV resistant

Miscellaneous:

- Process diaphragm PMC71: Al_2O_3 Aluminum-oxide-ceramic (FDA 21CFR186.1256, USP Class VI), ultrapure 99.9% (→ See also www.endress.com/ceraphire)
- Mounting accessories: Mounting kit with screws AISI 304 (1.4301)
- Capillary: AISI 316 Ti (1.4571)
- Protective hose for capillary: AISI 304 (1.4301)
- External earth terminal: AISI 304 (1.4301)

→ For process connections, process diaphragms, seals and filling oils see ordering information, page 74 ff.

Planning instructions, diaphragm seal systems

Applications

Diaphragm seal systems should be used if the process media and the device should be separated. Diaphragm seal systems offer clear advantages in the following instances:
- In the case of high process temperatures (→ See also page 32, section "Process temperature limits".)
- For aggressive media
- If good and rapid measuring point cleaning is necessary
- If the measuring point is exposed to vibrations
- For mounting locations that are difficult to access
- For very humid mounting locations

Planning instructions

Diaphragm seals are separating equipment between the measuring system and the process medium.

A diaphragm seal system consists of:
- A diaphragm seal in a one-sided system
- Capillary tube
- Fill fluid and
- A pressure transmitter.

The process pressure acts via the diaphragm seal membrane on the liquid-filled system, which transfers the process pressure via the capillary tube onto the sensor of the pressure transmitter.
Endress+Hauser delivers all diaphragm seal systems as welded versions. The system is hermetically sealed, which ensures the highest reliability.

Note!
The correlations between the individual diaphragm seal components are presented in the following section. For further information and comprehensive diaphragm seal system designs, please contact your local Endress+Hauser Sales Center.

Diaphragm seal

The diaphragm seal determines the application range of the system by
- the diaphragm diameter
- the diaphragms: stiffness and material
- the design (oil volume).

Diaphragm diameter

The larger the diaphragm diameter (less stiffness), the smaller the temperature effect on the measurement result.
Note: To keep the temperature effect in practice-oriented limits, you should select diaphragm seals with a nominal diameter of ≥ DN 80 (3"), in as far as the process connection allows for it.

Diaphragm stiffness

The stiffness is dependent on the diaphragm diameter, the material, any available coating and on the diaphragm thickness and shape. The diaphragm thickness and the shape are defined constructively. The stiffness of a diaphragm seal membrane influences the temperature operating range and the measuring error caused by temperature effects.

Capillary

Capillaries with an internal diameter of 1 mm are used as standard.
The capillary tube influences the T_K zero point, the ambient temperature operating range and the response time of a diaphragm seal system as a result of its length and internal diameter.
→ See also page 66 ff, sections "Influence of the temperature on the zero point" and "Ambient temperature range".
→ Observe the installation instructions regarding capillary tubes. See page 70 ff, section "Installation instructions".

Filling oil

When selecting the filling oil, fluid and ambient temperature as well as the operating pressure are of crucial importance. Observe the temperatures and pressures during commissioning and cleaning. A further selection criterion is the compatibility of the filling oil with the requirements of the process medium. For this reason, only filling oils that are harmless to health are used in the food industry, such as vegetable oil or silicone oil
→ See also the following section "Diaphragm seal filling oils" section.
The filling oil used influences the T_K zero point and the temperature operating range of a diaphragm seal system and the response time. → See also page 66 ff, section "Influence of the temperature on the zero point".

Pressure transmitter

The pressure transmitter influences the temperature operating range, the T_K zero point and the response time as a result of its volume change. The volume change is the volume that has to be shifted to pass through the complete measuring range.
Pressure transmitters from Endress+Hauser are optimised with regard to minimum volume change.

Diaphragm seal filling oils

Version [1]	Filling oil	Permissible temperature range [2] at 0.05 bar ≤ p_{abs} ≤ 1 bar	Permissible temperature [2] range at p_{abs} ≥ 1 bar	Density [g/cm³]	Viscosity [cSt at 25°C (77°F)]	Coefficient of thermal expansion [1/K]	T_K correction factor	Note
A, H, 1 or 2	Silicone oil (DC 200)	–40 to +180°C (–40 to +356°F)	–40 to +250°C (–40 to 482°F)	0.96	100	0.00096	1	suitable for foods FDA 21 CFR 175.105
G, 3 or 4	High tem silicone oil (DC 704)	–10 to +200°C (+14 to +392°F)	–10 to +400°C (+14 to +752°F)	1.07	37	0.0007	0.72	high temperatures
F or N	Inert oil (Halocarbon)	–40 to +80°C (–40 to +176°F)	–40 to +175°C (–40 to +347°F)	1.87	27	0.000876	0.91	Oil for ultra pure gas and oxygen applications
D, 5 or 6	Neobee M-20 Vegetable oil	–10 to +120°C (+14 to +248°F)	–10...+200°C (+14 to +392°F)	0.94	9.5	0.00101	1.05	suitable for foods FDA 21 CFR 172.856
7 or 8	Low temperature oil	–70 to +80°C –94 to +176°F	–70 to +180°C –94 to +356°F	0.92	4.4	–	–	low temperatures

1) Version for feature 90 in the order code

2) Observe temperature limits of the device (→ Page 31 and Page 33).

Influence of the temperature on the zero point

A temperature change results in a volume change of the filling oil. The volume change is dependent on the coefficient of thermal expansion of the filling oil and on the volume of the filling oil at calibration temperature (constant in the range: +21 to +33°C (+69.8 to 91.4°F)). → See also page 48, "Filling oils, technical data" section.
For example, the filling oil expands in the event of a temperature increase. The additional volume presses against the diaphragm seal membrane. The stiffer a diaphragm is, the greater its return force, which counteracts a volume change and acts on the measuring cell together with the operating pressure, thus shifting the zero point. For the "T_K Process" and "T_K Ambient (for devices without capillary)", see page 50 ff, section "Process connections PMP75".

The following diagrams display the temperature coefficient "T_K Ambient" dependent on the capillary length. The following application is displayed: capillary temperature and transmitter temperature (ambient temperature) change, the process temperature corresponds to the calibration temperature.
The temperature coefficients obtained from the diagrams apply to silicone oil and the membrane material AISI 316L SS/1.4435. For other filling oils, these temperature coefficients must be multiplied by the T_K correction factor of the corresponding filling oil. For the T_K correction factors, see page 67, section "Diaphragm seal filling oils".
With regard to the temperature coefficient "T_K Ambient", devices with temperature isolator behave like devices with the same process connection and 0,1 m capillary.

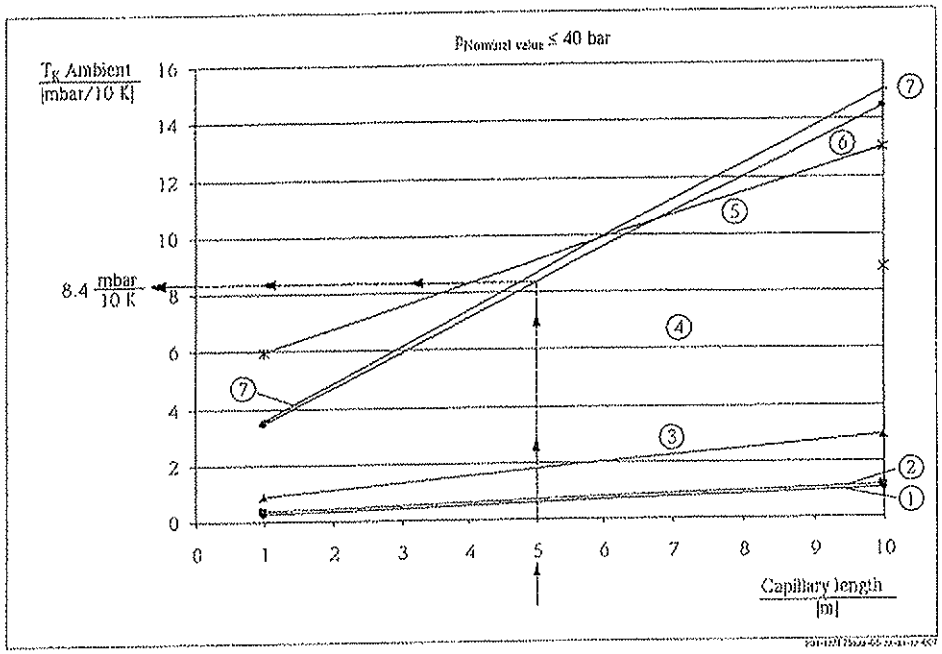

Diagram T_K Ambient dependent on the capillary length for PMP75, PN ≤ 40 bar

Example for:
- Diaphragm seal versions "B3, EN/DIN flange DN 50 PN 10-40 B1, AISI 316L"
- Capillary length: 5 m
- Ambient temperature, capillary/transmitter: 45°C
- Filling oil: silicone oil

1. Select characteristic curve type for the diaphragm seal versions "B3" in accordance with the following table.
   Result: characteristic curve type 6
2. Obtain value for T_K Ambient from the diagram.
   Result: 8.4 mbar/10 K
3. $T_{Ambient} - T_{Calibration} = 45°C - 25°C = 20°C \Rightarrow 8.4$ mbar/10 K x 20 K = 16.8 mbar

Result: In this application, the zero point is shifted by 16.8 mbar.

Note!
- The influence of temperature on the zero point can be corrected with position calibration.
- The temperature influence can be minimised by using a filling oil with a smaller coefficient of thermal expansion, shorter capillary, diaphragm seal with larger diaphragm diameter or by using a smaller capillary internal diameter.

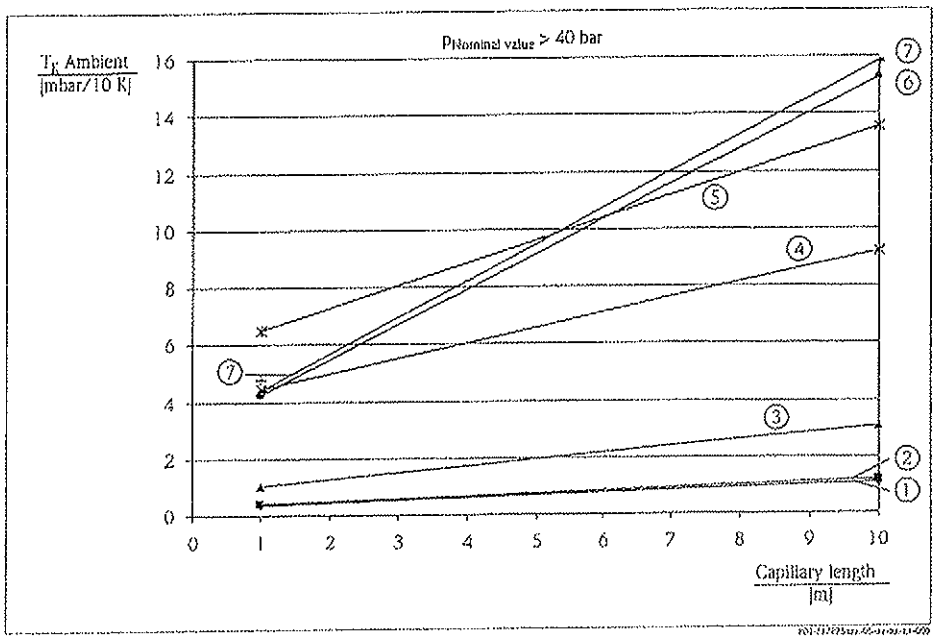

Diagram T_K Ambient dependent on the capillary length for PMP75, PN > 40 bar / 600 psi

Characteristic curve type	Version	Diaphragm seal
1	B4	EN/DIN flange DN 80 PN 10-40 B1, AISI 316L
	C4	EN/DIN flange DN 80 PN 100 B2, AISI 316L
	C5	EN/DIN flange DN 100 PN 100 B2, AISI 316L
	KL	JIS flange 10K 80A RF, AISI 316L
	KB	JIS flange 10K 100A RF, AISI 316L
	D4	EN/DIN flange DN 80, PN 10-40 B1, Extensions: 50 mm/100 mm/200 mm, AISI 316L
	AG	ANSI flange 3" 150 lbs RF, AISI 316/316L
	AS	ANSI flange 3" 300 lbs RF, AISI 316/316L
	AH	ANSI flange 4" 150 lbs RF, AISI 316/316L
	AT	ANSI flange 4" 300 lbs RF, AISI 316/316L
	J4	ANSI flange 3" 150 lbs RF, Extensions: 2"/4"/6"/8", AISI 316/316L
	J7	ANSI flange 3" 300 lbs RF, Extensions: 2"/4"/6"/8", AISI 316/316L
	J5	ANSI flange 4" 150 lbs RF, Extensions: 2"/4"/6"/8", AISI 316/316L
	J8	ANSI flange 4" 300 lbs RF, Extensions: 2"/4"/6"/8", AISI 316/316L
2	TF	Tri-Clamp, ISO 2852 DN 76.1 (3"), AISI 316L/1.4435
3	MT	DIN 11851 DN 80 PN 25, AISI 316L/1.4435
	M5	DIN 11851 DN 80 PN 25 socket, AISI 316L/1.4435
4	SD	Pipe diaphragm seal Tri-Clamp, ISO 2852 DN 51 (2"), AISI 316L
5	SC	Pipe diaphragm seal Tri-Clamp, ISO 2852 DN 38 (1 1/2"), AISI 316L
6	B3	EN/DIN flange DN 50 PN 1040 B1, AISI 316L
	C3	EN/DIN flange DN 50 PN 63 B2, AISI 316L
	EF	EN/DIN flange DN 50 PN 100-160 E, AISI 316L
	ER	EN/DIN flange DN 50 PN 250 E, AISI 316L
	E3	EN/DIN flange DN 50 PN 400 E, AISI 316L
	AF	ANSI flange 2" 150 lbs RF, AISI 316/316L
	AR	ANSI flange 2" 300 lbs RF, AISI 316/316L
	HF	ANSI flange 2" 400/600 lbs RF, AISI 316/316L
	HR	ANSI flange 2" 900/1500 lbs RF, AISI 316/316L
	H3	ANSI flange 2" 2500 lbs RF, AISI 316/316L
	KF	JIS 10K 50A RF, AISI 316L
	MR	DIN 11851 DN 50 PN 25, AISI 316L/1.4435
	M5	DIN 11851 DN 65 PN 25, AISI 316L/1.4435
	M3	DIN 11851 DN 50 PN 25 socket, AISI 316L/1.4435
	M4	DIN 11851 DN 65 PN 25 socket, AISI 316L/1.4435
7	TR	Varivent Type N for tubes DN 40 – DN 162, PN 40, AISI 316L/1.4435
	TK	DRD DN50 (65 mm), PN 25, AISI 316L/1.4435

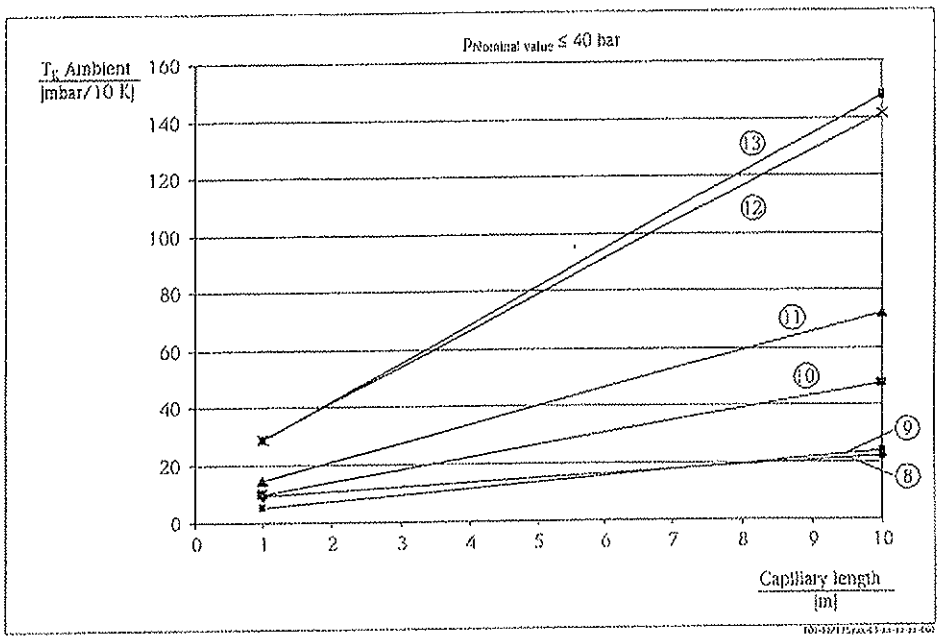

Diagram T_K Ambient dependent on the capillary length for PMP75, PN ≤ 40 bar / 600 psi

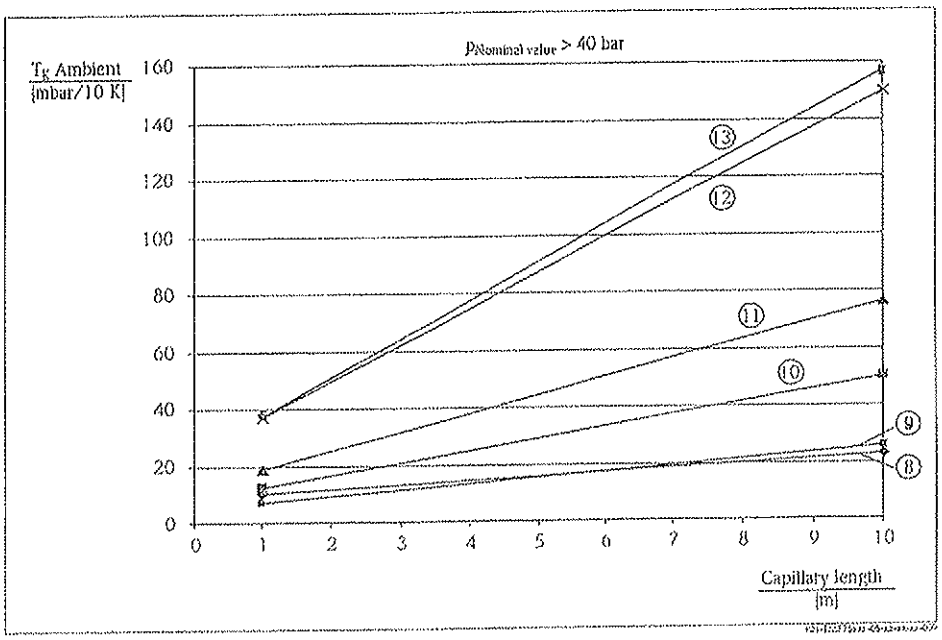

Diagram T_K Ambient dependent on the capillary length for PMP75, PN > 40 bar / 600 psi

Characteristic curve type	Version	Diaphragm seal
8	SB	Pipe diaphragm seal Tri-Clamp, ISO 2852 DN 25 (1"), AISI 316L
9	D3	EN/DIN flange PN10-40 B1, Extensions: 50 mm/100 mm/200 mm, AISI 316L
	J3	ANSI flange 2" 150 lbs, Extensions: 2"/4"/6"/8", AISI 316/316L
	TD	Tri-Clamp, ISO 2852 DN 51 (2"), AISI 316L/1.4435
10	CQ	EN/DIN flange DN 40 PN 10-40 B1, AISI 316L
	TI	SMS 2" PN 25, AISI 316L/1.4435
	TN	APV-RJT 2" PN 40, AISI 316L/1.4435
	TS	APV-ISS 2" PN 40, AISI 316L/1.4435
11	CP	EN/DIN flange DN32 PN 10-40 B1, AISI 316L
	AE	ANSI flange 1 1/2" 150 lbs RF, AISI 316/316L
	AQ	ANSI flange 1 1/2" 300 lbs RF, AISI 316/316L
	TC	Tri-Clamp, ISO 2852 DN 38 (1 1/2"), DIN 32676 DN 40, AISI 316L/1.4435
	TB	SMS 1 1/2" PN 25, AISI 316L/1.4435
	TM	APV-RJT 1 1/2" PN 40, AISI 316L/1.4435
	TS	APV-ISS 1 1/2" PN 40, AISI 316L/1.4435
12	CN	EN/DIN flange PN 10-40 B1, AISI 316L
	DN	EN/DIN flange PN 64-160 E, AISI 316L
	EN	EN/DIN flange PN 250 E, AISI 316L
	E1	EN/DIN flange PN 400 E, AISI 316L
	AC	ANSI flange 1" 150 lbs RF, AISI 316/316L
	AN	ANSI flange 1" 300 lbs RF, AISI 316/316L
	HC	ANSI flange 1" 400/600 lbs RF, AISI 316/316L
	HN	ANSI flange 1" 900/1500 lbs RF, AISI 316/316L
	HO	ANSI flange 1" 2500 lbs RF, AISI 316/316L
	KC	JIS flange 10K 25 A RF, AISI 316L
13	TB	Tri-Clamp, ISO 2852 DN 25 (1"), DIN 32676 DN 25, AISI 316L/1.4435

Ambient temperature range

The filling oil, capillary length, capillary internal diameter, process temperature and the oil volume of the diaphragm seal determine the ambient temperature operating range of the diaphragm seal system.
The operating range can be extended by using a filling oil with a smaller coefficient of expansion and by using shorter capillaries.

Installation instructions

Instructions for diaphragm seal systems

- The diaphragm seal together with the transmitter form a closed, calibrated system, which is filled through ports in the diaphragm seal and in the measurement system of the transmitter. These ports are sealed and must not be opened.
- In the case of devices with diaphragm seals and capillaries, the zero point shift caused by the hydrostatic pressure of the filling liquid column in the capillaries must be taken into account when selecting the measuring cell. If a measuring cell with a small measuring range is selected, a position adjustment can cause an overdrive. See the following diagram and the following example.
- For devices with temperature isolator or capillary a suitable fastening device (mounting bracket) is recommended.
- When using a mounting bracket, sufficient strain relief must be allowed for in order to prevent the capillary bending down (bending radius ≥ 100 mm/4").

Installation instructions

In order to obtain more precise measurement results and to avoid a defect in the device, mount the capillaries as follows:
- vibration-free (in order to avoid additional pressure fluctuations)
- not in the vicinity of heating or cooling lines
- insulate if the ambient temperature is below ore above the reference temperature
- with a bending radius of ≥ 100 mm (4").

Vacuum applications

For applications under vacuum, Endress+Hauser recommends mounting the pressure transmitter below the diaphragm seal. A vacuum load of the diaphragm seal caused by the presence of fill fluid in the capillary prevents is hereby prevented.

When the pressure transmitter is mounted above the diaphragm seal, the maximum height difference H1 in accordance with the following illustration on the left must not be exceeded. The maximum height difference is dependent on the density of the filling oil and the smallest ever pressure that is permitted to occur at the diaphragm seal (empty tank), see the following illustration, on the right.

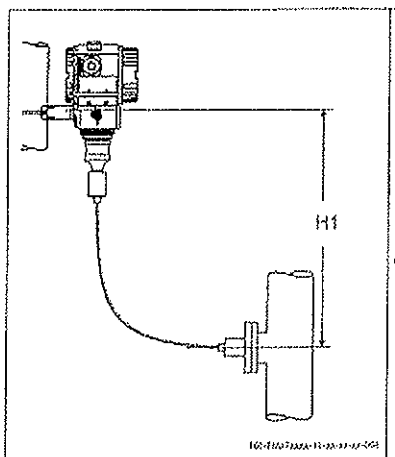

Installation above the diaphragm seal

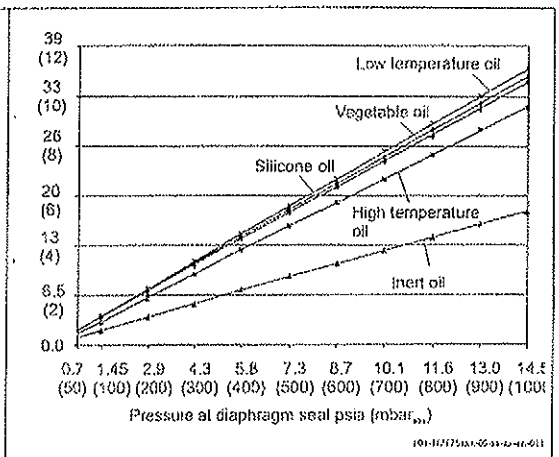

Diagram of maximum installation height above the diaphragm seal for vacuum applications

Certificates and approvals

CE mark	The device meets the legal requirements of the relevant EC directives. Endress+Hauser confirms that the device has been successfully tested by applying the CE mark.
Ex approvals	▪ ATEX ▪ FM ▪ CSA ▪ NEPSI ▪ IECEx ▪ GOST ▪ also combinations of different approvals All explosion protection data are given in separate documentation which is available upon request. The Ex documentation is supplied as standard with all devices approved for use in explosion hazardous areas. → See also page 87 ff, sections "Safety Instructions" and "Installation/Control Drawings".
Suitability for hygenic processes	The Cerabar S PMC71/PMP75 is suitable for the employment in hygenic processes. Overview of permitted process connections from page 5. Many versions meet the requirements of 3A-Sanitary Standard No. 74 and are certified by the EHEDG. Note! The gap-free connections can be cleaned without residue using the usual cleaning methods.
Marine certificate	▪ GL ▪ ABS
Overspill protection	WHG
CRN approvals	Some device versions have CRN approval. For a CRN-approved device, a CRN-approved process connection (→ see page 75, feature 70 "Process connection") has to be ordered with a CSA approval (→ see page 74, feature 10 "Approval"). PMP75 devices with capillary are not CRN-approved. These devices are fitted with a separate plate bearing the registration number 0F10525.5C.
Pressure Equipment Directive (PED)	The devices PMC71, PMP71 and PMP75 correspond to Article 3 (3) of the EC directive 97/23/EC (Pressure Equipment Directive) and has been designed and manufactured according to good engineering practice. Additionally applies: – PMP71 with threaded connection and internal diaphragm PN > 200 (2900 psi) as well as oval flange adapter PN > 200 (2900 psi): Suitable for stable gases in group 1, category I – PMP75 with pipe diaphragm seal ≥ 1.5"/PN 40: Suitable for stable gases in group 1, category II – PMP75 with separator PN > 200 (2900 psi): Suitable for stable gases in group 1, category I – PMP75 with threaded connection PN > 200 (2900 psi)

Standards and guidelines	DIN EN 60770 (IEC 60770): Transmitters for use in industrial-process control systems Part 1: Methods for inspection and routine testing DIN 16086: Electrical pressure measuring instruments, pressure sensors, pressure transmitters, pressure measuring instruments, concepts, specifications in data sheets EN 61326-X: EMC product family standard for electrical equipment for measurement, control and laboratory use.

Series H3

Explosion-Proof Differential Pressure Switches

Setpoints from 10" w.c. to 200 psid – Rated 1500 psig, Weatherproof

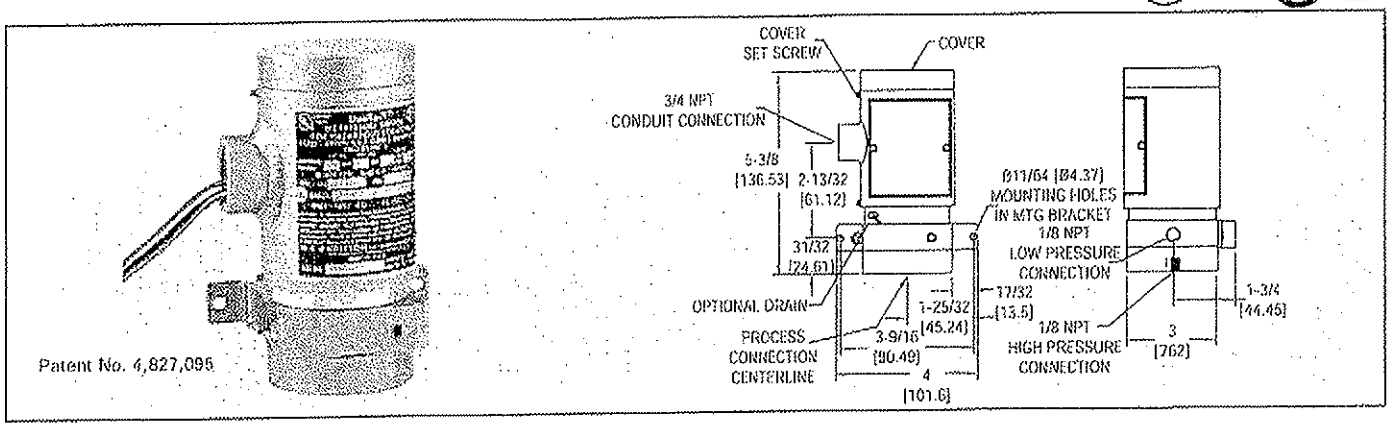

Explosion-proof, heavy duty, industrial unit has patented and unique new design which provides sensitivity to differential pressures as low as 10 inches of water (254 mm w.c.), yet handles total pressure of 1500 psi (103 bar). Unlike common differential pressure switches that use a piston-type motion transfer, the Series H3 utilizes a rotary motion transfer shaft that prevents a change in total pressure from causing a setpoint shift. Unit yields deadbands approximately 5% of range, with zero setpoint shift due to variation in working pressures. Friction is minimized and repeatability increased by allowing range spring to act directly on diaphragm plate. Rolling diaphragm design maintains constant effective area to further reduce friction. Diaphragm is allowed to "seat", allowing application of full rated pressure, up to 1500 psi (103 bar), on either high or low pressure port, without damage. Special overtravel feature prevents overtightening of range adjust screw. Choose optional 316SS chamber for water and water-based fluids or harsher applications.

HAZARDOUS LOCATION/WEATHERPROOF RATINGS

MODEL	UL	CSA	Directive 94/9/EC ATEX Compliant
H3 _ - _ _ C	—	—	CE 0344 Ex II 2 G EEx d IIB -20°C≤ T amb ≤ 75°C T6 EC-Type Certificate No. KEMA 03ATEX 2584
H3 _ - _ _ L H3 _ - _ _ T	Cl. I, Gr.B, C & D Cl. II, Gr.E, F & G NEMA 4X	Cl. I, Gr.B, C & D Cl. II, Gr.E, F & G NEMA 4	—
H3 _ - _ _ C-DR	—	—	CE 0344 Ex II 2 G EEx d IIB -20°C≤ T amb ≤ 75°C T6 EC-Type Certificate No. KEMA 03ATEX 2584
H3 _ - _ _ L-DR	Cl. I, Gr.B, C & D Cl. II, Gr.E, F & G NEMA 3	—	—

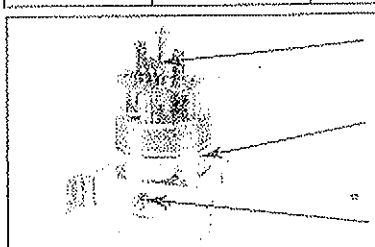

Internal terminal blocks for conductors up to 18 gauge are optional.

Optional NEMA 3 (IP 54) housing includes explosion-proof drain. Standard NEMA 4X (IP 56) version is without drain.

External Ground Connection Standard — Internal ground connection also standard — use either one.

Note: Shown without housing and cover.

SPECIFICATIONS

Wetted Materials: See pressure chamber and diaphragm material in model chart.
Temperature Limit: -4 to 220°F (-20 to 104°C).
ATEX: -20 to 90°C (-4 to 194°F).
Pressure Limit: 1500 psig (103 bar).
Enclosure Rating: See ratings chart.
Switch Type: SPDT or DPDT snap switch.
Electrical Rating: 5A @ 125/250 VAC, 30 VDC.
Electrical Connections: See model chart.
Conduit Connection: 3/4" female NPT.
Process Connection: 1/8" female NPT.
Mounting Orientation: Vertical.
Set Point Adjustment: Internal screw.
Weight: 4 lb, 2 oz (2 kg).
Deadband: Approximately 5% of range.
Agency Approvals: UL, CSA, CE, and ATEX see ratings chart.

Model H3A-1SL .....
Model H3A-2SL .....
Model H3A-3SL .....
Model H3S-1SL .....
Model H3S-2SL .....
Model H3S-3SL .....
A-610-Pipe Mounting Kit for 1-1/4 to 2" pipe .....

Model Chart - Series H3

Example	H3	S	2	S	C	MV	H3S-2SC-MV Differential Pressure Control; 316 SS pressure chamber and fluoroelastomer diaphragm; weatherproof and ATEX; SPDT snap action switch with gold contacts; fixed deadband, automatic reset; adjustable range 0.5-15 psid
Construction	H3						Series designator, weatherproof and explosion-proof
Pressure Chamber & Diaphragm Material (Wetted)		A					Aluminum chamber with Nitrile diaphragm
		S					316 SS chamber with Fluoroelastomer diaphragm
Adjustable Operating Range			1				Adjustable range 10-100 in. w.c. (2.48-44.70 kPa)
			2				Adjustable range 0.5-15 psid (0.03-1 bar)
			3				Adjustable range 5-70 psid (.34-4.8 bar)
Deadband approximately 5% of range			4				Adjustable range 10-200 psid (.7-13.8 bar) Maximum pressure for all ranges is 1500 psi (103 bar)
Circuit (Switch) Options				S			SPDT snap action switch rated 5A @ 125/250 VAC, 30 VDC
				D			DPDT snap action switch rated 5A @ 125/250 VAC, 30 VDC
Electrical Connection					T		18 AWG x 18 inch lead wires UL, CSA approved internal terminal block
Options						C	ATEX approved internal terminal block
						DRAIN	Housing with drain - allows condensate to be drained from inside enclosure (meets NEMA 3 instead of 4X)
						MV	Gold contacts on snap switch for dry circuits rated 1A @ 125 VAC, 1A resistive or 0.5 A inductive @ 30 VDC
						VIT	Fluoroelastomer diaphragm option where not standard

Section VIII
Pressure

500 Series
Multi-Purpose Safety Relief Valves

Versatile safety relief valve available in bronze, carbon steel or all stainless steel construction, suitable for a wide range of steam, air, gas and liquid applications. High capacity full nozzle design is available with metal to metal, PCTFE or elastomer O-ring seating. Short tuned blowdown and backpressure tight body minimizes fugitive emissions and product losses in the event of valve operation.

ASME Section VIII Air, Steam, and Liquid service
Sizes 1/2" through 2" NPT
Set pressure range 5-900 psig @ 800°F max.
(See press. / temp. limit chart below for specific ratings for each model).

Applications:
- Pressure Vessels and Pressure Piping Systems
- Pumps, Tanks and Hydraulic Systems
- Thermal Relief of Liquid Filled Vessels
- Chemical, Process and other Industrial Plants.
- Power Plant Auxiliary Systems
- Cryogenic and Industrial Gases
- Air and Gas Compressors and Dryers
- Vacuum Relief

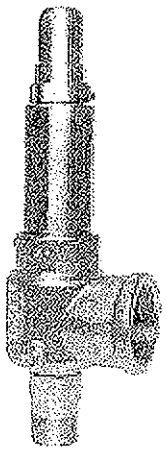

Features
- Wide Range of Materials and Options
- One Trim Design is Suitable for Steam, Air / Gas and Liquid Service
- High Capacity Full Nozzle Design
- Stainless Steel Springs
- Integral Lift Stop
- Self - Aligning Pivoting Disc
- API 527 Seat Tightness, standard for all models
- Tuned Blowdown - Short and Adjustable, reduces product losses.
- Backpressure Tight Design Minimizes Fugitive Emissions
- CSA B51 CRN OG8547.5C

Options
- Screwed Cap (standard), Packed Lift Lever
- Test gags
- Elastomer or PCTFE Soft Seat for Exceptional Seat Tightness
- High Temperature Alloy Springs for 422°F - 800°F Service
- Special Cleaning Available
- Cryogenic Preparation (Consult factory)
- New! - European pressure equipment directive compliant option

500 Series Model Numbering System

52	3	J	H	B	K	M	AA	0425
Series Body/Trim Mat'l	Cap	Orifice Letter	Inlet Size	Connection	Service	Seal	Special Options	Set Pressure
51=Bronze/Brass 52=Bronze/ Stainless 53=Carbon/ Stainless 54=All Stainless	1=Screwed Cap 2=Screwed + Gag 3=Packed Lever 4=Packed + Gag	D E F G H J	C=1/2 D=3/4 E=1 F=1-1/4 G=1-1/2 H=2	B=MNPT X FNPT D=3/4 Outlet (Model 510 & 520 D Orifice Only	J=Sec VIII Liquid K=Sec VIII Air/Gas L=SEC VIII Steam M=Non Code Liquid N=Non Code Air P=NON CODE Steam O=Vacuum	M=Metal B=BUNA-N E=EPR K=PCTFE N=Neoprene S=Silicone V=Viton	Factory Issued Letters / Numbers For Special Options Or Features "AA"=Default Standard "CE"=CE/PED "HT" High Temp Spring "OX"=Cleaned For Oxygen	Set pressure psig (4 Digits) Vacuum "HG" Prefix + 2 Digits

Notes:
1. *The ASME Code Section VIII requires a lift lever for the following services: air, steam, or hot water over 140°F*
2. *Maximum back pressure is 50 psig.*
3. *High temperature stainless steel alloy spring is required above 422°F / 217°C. Specify option "HT"*

500 Series
Multi-Purpose Safety Relief Valves

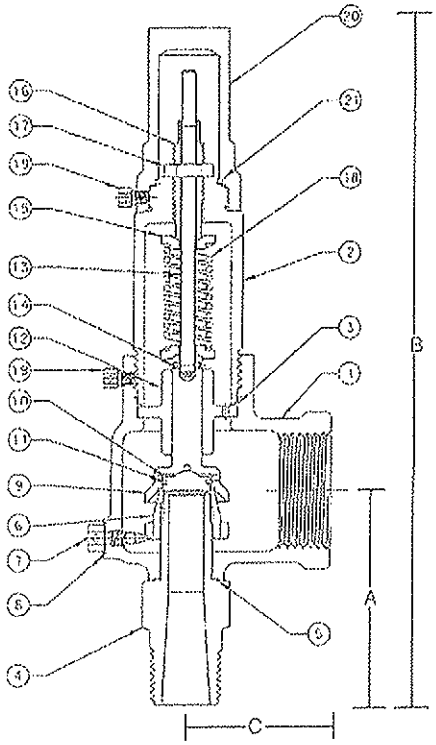

500 Assembly w/Screwed Cap

Materials

Item	Component	Material 510 Series	Material 520 Series	Material 530 Series	Material 540 series
1	BODY	BRONZE B-584-C844	BRONZE B-584-C844	STEEL SA-216 WCB	SS SA-351-CF8M
2	BONNET	BRASS*	BRASS*	STEEL**	SS TYPE 316***
3	BONNET SEAL	PTFE	PTFE	PTFE	PTFE
4	NOZZLE	BRASS B-16	SS TYPE 316	SS TYPE 316	SS TYPE 316
5	NOZZLE SEAL	PTFE	PTFE	PTFE	PTFE
6	NOZZLE RING	SS TYPE 316	SS TYPE 316	SS TYPE 316	SS TYPE 316
7	SET SCREW	BRASS	BRASS	SS TYPE 316	SS TYPE 316
8	SET SCREW SEAL	PTFE	PTFE	PTFE	PTFE
9	DISC HOLDER	BRASS	SS TYPE 316	SS TYPE 316	SS TYPE 316
10	DISC	SS TYPE 316	SS TYPE 316	SS TYPE 316	SS TYPE 316
11	RETAINING RING	STAINLESS STEEL	STAINLESS STEEL	STAINLESS STEEL	STAINLESS STEEL
12	DISC GUIDE	BRASS	BRASS	SS TYPE 316	SS TYPE 316
13	STEM	BRASS	BRASS	SS TYPE 316	SS TYPE 316
14	SPRING PIN	STAINLESS STEEL	STAINLESS STEEL	STAINLESS STEEL	STAINLESS STEEL
15	SPRING WASHER	BRASS	BRASS	SS TYPE 316	SS TYPE 316
16	ADJUSTING BOLT	BRASS	BRASS	SS TYPE 316	SS TYPE 316
17	LOCK NUT	BRASS	BRASS	SS TYPE 316	SS TYPE 316
18	SPRING	STAINLESS STEEL	STAINLESS STEEL	STAINLESS STEEL	STAINLESS STEEL
	SPRING, HIGH TEMP.	INCONEL	INCONEL	INCONEL	INCONEL
19	LOCK SCREW	STAINLESS STEEL	STAINLESS STEEL	STAINLESS STEEL	STAINLESS STEEL
20	CAP, SCREWED	BRASS	BRASS	STEEL	SS TYPE 316
21	SEAL, CAP	VITON	VITON	VITON	VITON
-	NAMEPLATE	STAINLESS STEEL	STAINLESS STEEL	STAINLESS STEEL	STAINLESS STEEL
-	DRIVE SCREW	STAINLESS STEEL	STAINLESS STEEL	STAINLESS STEEL	STAINLESS STEEL
-	SEAL & WIRE	LEAD/SS	LEAD/SS	LEAD/SS	LEAD/SS

Notes:

* *Sizes G, H and J are Cast Bronze*

** *Sizes H and J are Cast Steel*

*** *Sizes H and J are Cast Stainless Steel Type 316*

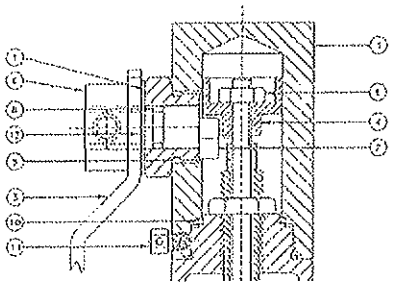

Packed Lever Detail

Materials of Construction, Lift Lever Option

Item	Component	Material 513, 523 Series	Material 533 Series	Material 543 Series
1	CAP, PACKED LEVER	BRASS	STEEL	SS TYPE 316
2	CAM BUSHING	STAINLESS STEEL	STAINLESS STEEL	STAINLESS STEEL
3	LEVER	STAINLESS STEEL	STAINLESS STEEL	STAINLESS STEEL
4	LIFT WASHER	STAINLESS STEEL	STAINLESS STEEL	STAINLESS STEEL
5	LOCKNUT	STAINLESS STEEL	STAINLESS STEEL	STAINLESS STEEL
6	COLLAR	STAINLESS STEEL	STAINLESS STEEL	STAINLESS STEEL
7	CAM BUSHING	BRASS	STAINLESS STEEL	STAINLESS STEEL
8	CAM O-RING	VITON	VITON	VITON
9	BUSHING O-RING	VITON	VITON	VITON
10	SEAL, CAP	VITON	VITON	VITON
11	SET SCREW	STAINLESS STEEL	STAINLESS STEEL	STAINLESS STEEL
12	WASHER	PTFE	PTFE	PTFE

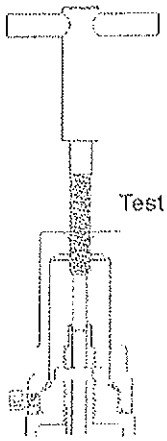

Test Gag Detail

500 Series Soft Seat Detail

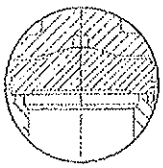

PCTFE

O-Ring

500 Series

Multi-Purpose Safety Relief Valves

Soft Seat Pressure & Temperature Limits* - 500 Series

Seat Material	Set Pressure Min.	Set Pressure Max.	Temperature Min.	Temperature Max.	Service Recommendations**
VITON	15	900	-15°F	400°F	AIR, BENZENE, BUTANE, CARBON DIOXIDE, CARBON DISULPHIDE, CARBON TETRACHLORIDE, DOWTHERM A, ETHYL ALCOHOL, ETHYL CHLORIDE, ETHYLENE, ETHYLENE GLYCOL, FUEL OIL, GASOLINE, HYDRAULIC FLUID, JP-4 AND -5 FUEL, KEROSENE, LUBE OIL, NATURAL GAS, NAPHTHA, NITROGEN, PROPANE, PROPYL ALCOHOL, PROPYLENE, SULPHUR DIOXIDE, TOLUENE, TRICHLORETHYLENE, TURPENTINE, VINYL CHLORIDE, WATER
EPDM	15	900	-70°F	250°F	STEAM, WATER, HOT WATER, ACETONE, BEER, BRAKE FLUID, HYDROGEN GAS, HYDROGEN SULPHIDE, PHOSPHATE ESTER HYDRALIC FLUID, SULPHUR DIOXIDE, ACIDS, ALKALIS
SILICONE	15	900	-60°F	450°F	AIR, HELIUM, NITROGEN, OXYGEN (GASEOUS)
NEOPRENE	15	900	-35°F	225°F	AIR, ANHYDROUS AMMONIA, BUTANE, BUTYL ALCOHOL, CASTOR OIL, DENATURED ALCOHOL, ETHANOL, ETHYL ALCOHOL, FREON 12, 13, 14 & 22, GLYCOLS, NATURAL GAS, OXYGEN (GASEOUS), SILICATE ESTERS
NITRILE / BUNA-N	15	900	-30°F	250°F	AIR, ANHYDROUS AMMONIA, BUTANE, CARBON DIOXIDE, DIESEL OIL, FREON 11 & 12, FUEL OIL, GASOLINE, HELIUM, HYDRAULIC FLUID (PETROLEUM BASED), HYDROGEN SULPHIDE, HYDROGEN GAS, KEROSENE, LUBE OIL, NATURAL GAS, NITROGEN, OXYGEN (GASEOUS), PROPANE, PROPYLENE, SULPHUR DIOXIDE, VINYL CHLORIDE
PCTFE	15	500	-320°F	250°F	CRYOGENIC SERVICE INCLUDING ARGON, CARBON DIOXIDE, HELIUM, HYDROGEN, NITROGEN, OXYGEN

Notes:

- *Subject to valve body material pressure / temperature limitations. See chart below.*
- *** Service recommendations are provided for guidance only. Material suitability and selection should be determined by the end user based on their prior experience with the service and materials involved.*

Pressure and Temperature Ratings

Series	510	520	530	540
Body	Bronze	Bronze	Carbon Steel	Stainless Steel
Trim	Brass	Stainless	Stainless	Stainless
Max. Set-Steam	250 PSI	300 PSI	900 PSI (D/E) 600 PSI (F/G) 500 PSI (H/J)	900 PSI (D/E) 600 PSI (F/G) 500 PSI (H/J)
Max. Set-Air/Gas/Liquid	300 PSI	900 PSI (D/E) 600 PSI (F/G) 500 PSI (H/J)	900 PSI (D/E) 600 PSI (F/G) 500 PSI (H/J)	900 PSI (D/E) 600 PSI (F/G) 500 PSI (H/J)
Temp. Limits*	-60/405°F	-60/422°F	-20/800°F	-60/800°F

Notes:

- *Limits based upon materials of construction and use of metal to metal seating. Refer to 500 series soft seat chart for limitations based upon elastomer.*
- *Specify "HT" high temperature Inconel springs for service temperature beyond 422°F.*
- *Models 510, 520 and 540 are suitable for cryogenic service to -320°F, subject to special preparation and use of "K" option PCTFE seat. Consult factory for details.*

Selection/Dimensions and Weights

Model Number	Orifice Letter	Size Inlet x Outlet	A (in./mm.)	B (in./mm.)	C (in./mm.)	Weight (Lb./kg.)
5xxDC	D	1/2 X 1	2.38 *60*	7.5 *191*	1.63 *41*	2 *0.9*
5xxDCD*	D	1/2 X 3/4	2.38 *60*	7.5 *191*	1.63 *41*	2 *0.9*
5xxDD	D	3/4 X 1	2.38 *60*	7.5 *191*	1.63 *41*	2 *0.9*
5xxDDD*	D	3/4 X 3/4	2.38 *60*	7.5 *191*	1.63 *41*	2 *0.9*
5xxED	E	3/4 X 1-1/4	2.63 *67*	9 *229*	2 *51*	3 *1.4*
5xxEE	E	1 X 1-1/4	2.63 *67*	9 *229*	2 *51*	3 *1.4*
5xxFE	F	1 X 1-1/2	2.83 *73*	10.25 *260*	2.38 *60*	5 *2.3*
5xxFF	F	1-1/4 X 1-1/2	2.83 *73*	10.25 *260*	2.38 *60*	5 *2.3*
5xxGF	G	1-1/4 X 2	3.25 *83*	13.25 *337*	2.63 *67*	9 *4.1*
5xxGG	G	1-1/2 X 2	3.25 *83*	13.25 *337*	2.68 *67*	9.5 *4.31*
5xxHG	H	1-1/2 X 2-1/2	3.5 *89*	15 *381*	2.75 *70*	15.5 *7.0*
5xxHH	H	2 X 2-1/2	3.5 *89*	15 *381*	2.75 *70*	16 *7.3*
5xxJH	J	2 X 3	4 *102*	17 *432*	3.25 *83*	24 *10.9*

** 3/4" Outlet option available with 510 and 520 bronze bodied models only.*

500 Series

Multi-Purpose Safety Relief Valves

ASME Section VIII Steam

POUNDS PER HOUR (KILOGRAMS PER HOUR) SATURATED STEAM AT 10% OVERPRESSURE.
NATIONAL BOARD CERTIFIED. RATINGS ARE 90% OF ACTUAL.

U.S. Customary Units lbs./hr.

Orifice Letter	D	E	F	G	H	J
Area (in.²)	0.1295	0.2282	0.3589	0.5890	0.9195	1.5044
Set Pressure psig						
5*	122	216	339	557	869	1,422
10*	168	295	465	762	1,190	1,947
15	188	331	520	853	1,332	2,180
20	216	381	600	984	1,536	2,513
25	245	432	679	1,114	1,740	2,846
30	274	482	759	1,245	1,943	3,180
35	305	538	846	1,388	2,168	3,546
40	337	593	934	1,532	2,392	3,913
45	368	649	1,021	1,676	2,616	4,280
50	400	705	1,108	1,819	2,840	4,646
55	431	760	1,196	1,963	3,064	5,013
60	463	816	1,283	2,106	3,288	5,380
65	494	872	1,371	2,250	3,512	5,746
70	526	927	1,458	2,393	3,736	6,113
75	558	983	1,546	2,537	3,960	6,479
80	589	1,038	1,633	2,680	4,184	6,846
85	621	1,094	1,721	2,824	4,408	7,213
90	652	1,150	1,808	2,968	4,632	7,579
95	684	1,205	1,896	3,111	4,857	7,946
100	715	1,261	1,983	3,255	5,081	8,313
125	873	1,539	2,421	3,972	6,201	10,146
150	1,031	1,817	2,858	4,690	7,322	11,979
175	1,189	2,095	3,295	5,408	8,442	13,812
200	1,346	2,373	3,733	6,126	9,562	15,645
225	1,504	2,651	4,170	6,843	10,683	17,478
250	1,662	2,929	4,607	7,561	11,803	19,312
275	1,820	3,207	5,045	8,279	12,924	21,145
300	1,977	3,485	5,482	8,997	14,044	22,978
325	2,135	3,763	5,919	9,714	15,165	24,811
350	2,293	4,041	6,357	10,432	16,285	26,644
375	2,451	4,319	6,794	11,150	17,405	28,477
400	2,608	4,597	7,231	11,867	18,526	30,311
425	2,766	4,875	7,669	12,585	19,646	32,144
450	2,924	5,153	8,106	13,303	20,767	33,977
475	3,082	5,431	8,543	14,021	21887	35,810
500	3,239	5,709	8,981	14,738	23,008	37,643
525	3,397	5,987	9,418	15,456	-	-
550	3,555	6,266	9,855	16,174	-	-
575	3,713	6,544	10,293	16,892	-	-
600	3,870	6,822	10,730	17,609	-	-
625	4,028	7,100	-	-	-	-
650	4,186	7,378	-	-	-	-
675	4,344	7,656	-	-	-	-
700	4,501	7,934	-	-	-	-
725	4,659	8,212	-	-	-	-
750	4,817	8,490	-	-	-	-
775	4,975	8,768	-	-	-	-
800	5,132	9,046	-	-	-	-
825	5,290	9,324	-	-	-	-
850	5,448	9,602	-	-	-	-
875	5,606	9,880	-	-	-	-
900	5,763	10,158	-	-	-	-
Approx. 1 psi Increment	6.3	11.1	17.5	28.7	44.8	73.3

Metric Units kg./hr.

Orifice Letter	D	E	F	G	H	J
Area (Cm.²)	0.8352	1.4721	2.3155	3.8001	5.9321	9.7058
Set Pressure barg						
0.4*	60	105	165	271	423	692
0.8*	82	145	228	374	583	955
1.1	88	154	243	398	622	1,018
2	122	214	337	553	863	1,412
3	163	287	451	741	1,156	1,892
4	204	360	566	930	1,451	2,374
5	246	433	681	1,118	1,746	2,857
6	287	506	797	1,307	2,041	3,339
7	329	580	912	1,496	2,336	3,821
8	370	653	1,027	1,685	2,630	4,304
9	412	726	1,142	1,874	2,925	4,786
10	453	799	1,257	2,063	3,220	5,269
12	536	945	1,487	2,441	3,810	6,233
14	619	1,092	1,717	2,818	4,400	7,198
16	702	1,238	1,947	3,196	4,989	8,163
18	786	1,384	2,178	3,574	5,579	9,128
20	869	1,531	2,408	3,952	6,169	10,093
22	952	1,677	2,638	4,329	6,758	11,058
24	1,035	1,823	2,868	4,707	7,348	12,022
26	1,118	1,970	3,098	5,085	7,938	12,987
28	1,201	2,116	3,329	5,463	8,527	13,952
30	1,284	2,262	3,559	5,840	9,117	14,917
32	1,367	2,409	3,789	6,218	9,707	15,882
34	1,450	2,555	4,019	6,596	10,297	16,846
36	1,533	2,701	4,249	6,974	-	-
38	1,616	2,848	4,479	7,351	-	-
40	1,699	2,994	4,710	7,729	-	-
42	1,782	3,140	-	-	-	-
44	1,865	3,287	-	-	-	-
46	1,948	3,433	-	-	-	-
48	2,031	3,579	-	-	-	-
50	2,114	3,726	-	-	-	-
52	2,197	3,872	-	-	-	-
54	2,280	4,019	-	-	-	-
58	2,446	4,311	-	-	-	-
62	2,612	4,604	-	-	-	-
Approx. 0.1 bar Increment	4.15	7.32	11.51	18.89	29.48	48.24

Set Pressure Limits
510 Series - 250 psig/17.3 barg
520 Series - 300 psig/20.7 barg
530 Series - 900 psig/62.1 barg
540 Series - 900 psig/62.1 barg

Note: For steam service beyond 300 psig or 422°F specify option "HT" high temperature stainless steel alloy spring.

**Pressure settings below 15 psig/1.03 barg are non-ASME code.*

500 Series

Multi-Purpose Safety Relief Valves

ASME Section VIII Air

STANDARD CUBIC FEET PER MINUTE (NORMALIZED CUBIC METERS PER HOUR) OF AIR AT 10% OVERPRESSURE. NATIONAL BOARD CERTIFIED. RATINGS ARE 90% OF ACTUAL.

U.S. Customary Units SCFM

Orifice Letter	D	E	F	G	H	J
Area (In.²)	0.1295	0.2282	0.3589	0.5890	0.9195	1.5044
Set Pressure psig						
5*	39	69	108	178	277	454
10*	54	96	151	248	387	633
15	67	118	185	304	474	776
20	77	136	213	350	547	895
25	87	154	242	397	619	1,013
30	97	172	270	443	692	1,132
35	109	191	301	494	772	1,262
40	120	211	332	545	851	1,393
45	131	231	363	596	931	1,523
50	142	251	395	648	1,011	1,654
55	154	271	426	699	1,091	1,784
60	165	290	457	750	1,170	1,915
65	176	310	488	801	1,250	2,045
70	187	330	519	852	1,330	2,176
75	198	350	550	903	1,410	2,306
80	210	370	581	954	1,489	2,437
85	221	389	612	1,005	1,569	2,567
90	232	409	644	1,056	1,649	2,698
95	243	429	675	1,107	1,729	2,828
100	255	449	706	1,158	1,808	2,959
125	311	548	862	1,414	2,207	3,611
150	367	647	1,017	1,669	2,606	4,264
175	423	746	1,173	1,925	3,005	4,916
200	479	845	1,329	2,180	3,404	5,569
225	535	944	1,484	2,436	3,802	6,221
250	592	1,043	1,640	2,691	4,201	6,874
275	648	1,142	1,796	2,947	4,600	7,526
300	704	1,240	1,951	3,202	4,999	8,179
325	760	1,339	2,107	3,458	5,398	8,831
350	816	1,438	2,263	3,713	5,796	9,484
375	872	1,537	2,418	3,969	6,195	10,136
400	928	1,636	2,574	4,224	6,594	10,789
425	985	1,735	2,730	4,480	6,993	11,441
450	1,041	1,834	2,885	4,735	7,392	12,094
475	1,097	1,933	3,041	4,991	7,791	12,746
500	1,153	2,032	3,197	5,246	8,189	13,399
525	1,209	2,131	3,352	5,501	-	-
550	1,265	2,230	3,508	5,757	-	-
575	1,321	2,329	3,664	6,012	-	-
600	1,378	2,428	3,819	6,268	-	-
625	1,434	2,527	-	-	-	-
650	1,490	2,626	-	-	-	-
675	1,546	2,725	-	-	-	-
700	1,602	2,824	-	-	-	-
725	1,658	2,923	-	-	-	-
750	1,715	3,022	-	-	-	-
775	1,771	3,121	-	-	-	-
800	1,827	3,220	-	-	-	-
825	1,883	3,319	-	-	-	-
850	1,939	3,418	-	-	-	-
875	1,995	3,517	-	-	-	-
900	2,051	3,616				
Approx.1 psi Increment	2.2	4.0	6.2	10.2	16.0	26.1

Metric Units Nm³./hr.

Orifice Letter	D	E	F	G	H	J
Area (Cm.²)	0.8352	1.4721	2.3155	3.8001	5.9321	9.7058
Set Pressure barg						
0.4*	67	119	187	307	479	784
0.8*	94	165	260	427	667	1,091
1.1	110	195	306	503	784	1,283
2	153	270	425	697	1,088	1,781
3	205	362	569	934	1,458	2,386
4	258	454	714	1,172	1,830	2,994
5	310	546	859	1,411	2,202	3,603
6	362	639	1,005	1,649	2,574	4,211
7	415	731	1,150	1,887	2,946	4,819
8	467	823	1,295	2,125	3,317	5,428
9	519	916	1,440	2,363	3,689	6,036
10	572	1,008	1,585	2,601	4,061	6,644
12	676	1,192	1,875	3,078	4,805	7,861
14	781	1,377	2,166	3,554	5,548	9,078
16	886	1,561	2,456	4,031	6,292	10,295
18	991	1,746	2,746	4,507	7,036	11,511
20	1,095	1,931	3,037	4,983	7,779	12,728
22	1,200	2,115	3,327	5,460	8,523	13,945
24	1,305	2,300	3,617	5,936	9,267	15,162
26	1,409	2,484	3,907	6,413	10,010	16,378
28	1,514	2,669	4,198	6,889	10,754	17,595
30	1,619	2,853	4,488	7,365	11,498	18,812
32	1,724	3,038	4,778	7,842	12,241	20,029
34	1,828	3,222	5,069	8,318	12,985	21,245
36	1,933	3,407	5,359	8,795	-	-
38	2,038	3,591	5,649	9,271	-	-
40	2,142	3,776	5,939	9,747	-	-
42	2,247	3,961	-	-	-	-
44	2,352	4,145	-	-	-	-
46	2,457	4,330	-	-	-	-
48	2,561	4,514	-	-	-	-
50	2,666	4,699	-	-	-	-
52	2,771	4,883	-	-	-	-
54	2,875	5,068	-	-	-	-
58	3,085	5,437	-	-	-	-
62	3,294	5,806	-	-	-	-
Approx. 0.1 bar Increment	5.24	9.23	14.51	23.82	37.18	60.84

Set Pressure Limits
510 Series - 300 psig/20.7 barg
520 Series - 900 psig/62.1 barg
530 Series - 900 psig/62.1 barg
540 Series - 900 psig/62.1 barg

Pressure settings below 15 psig/1.03 barg are non-ASME code.

500 Series

Multi-Purpose Safety Relief Valves

ASME Section VIII Water

U.S. GALLONS PER MINUTE (CUBIC METERS PER HOUR) OF WATER AT 10% OVER PRESSURE.
NATIONAL BOARD CERTIFIED. RATINGS ARE 90% OF ACTUAL.

U.S. Customary Units GPM

Orifice Letter	D	E	F	G	H	J
Area (In.²)	0.1295	0.2282	0.3589	0.5890	0.9195	1.5044
Set Pressure psig						
5*	13	24	37	61	95	156
10*	14	24	38	63	98	161
15	14	25	40	65	102	167
20	16	29	45	74	115	189
25	18	32	50	82	127	208
30	19	34	54	89	138	226
35	21	37	58	96	149	244
40	22	40	62	102	160	261
45	24	42	66	108	169	277
50	25	44	70	114	178	292
55	26	46	73	120	187	306
60	28	48	76	125	195	320
65	29	50	79	130	203	333
70	30	52	82	135	211	345
75	31	54	85	140	218	357
80	32	56	88	145	226	369
85	33	58	91	149	233	381
90	34	59	93	153	239	392
95	35	61	96	158	246	402
100	36	63	98	162	252	413
125	40	70	110	181	282	462
150	44	77	121	198	309	506
175	47	83	130	214	334	546
200	50	89	139	229	357	584
225	53	94	148	242	378	619
250	56	99	156	256	399	653
275	59	104	163	268	418	685
300	62	108	171	280	437	715
325	64	113	178	291	455	744
350	66	117	184	302	472	772
375	69	121	191	313	489	799
400	71	125	197	323	505	826
425	73	129	203	333	520	851
450	75	133	209	343	535	876
475	77	136	215	352	550	900
500	79	140	220	361	564	923
525	81	143	226	370	-	-
550	83	147	231	379	-	-
575	85	150	236	388	-	-
600	87	153	241	396	-	-
625	89	157	-	-	-	-
650	91	160	-	-	-	-
675	92	163	-	-	-	-
700	94	166	-	-	-	-
725	96	169	-	-	-	-
750	97	171	-	-	-	-
775	99	174	-	-	-	-
800	100	177	-	-	-	-
825	102	180	-	-	-	-
850	104	183	-	-	-	-
875	105	185	-	-	-	-
900	107	188	-	-	-	-

Metric Units m³/hr.

Orifice Letter	D	E	F	G	H	J
Area (Cm.²)	0.8352	1.4721	2.3155	3.8001	5.9321	9.7058
Set Pressure barg						
0.4*	2.0	3.6	5.6	9.2	14.4	23.6
0.8*	2.9	5.1	8.0	13.1	20.4	33.3
1.1	3.3	5.9	9.3	15.2	23.8	38.9
2	4.4	7.7	12.1	19.8	30.9	50.6
3	5.3	9.4	14.8	24.2	37.8	61.8
4	6.1	10.8	17.0	28.0	43.6	71.4
5	6.9	12.1	19.0	31.3	48.8	79.8
6	7.5	13.3	20.9	34.2	53.4	87.4
7	8.1	14.3	22.5	37.0	57.7	94.5
8	8.7	15.3	24.1	39.5	61.7	101.0
9	9.2	16.2	25.6	41.9	65.5	107.1
10	9.7	17.1	26.9	44.2	69.0	112.9
12	10.6	18.8	29.5	48.4	75.6	123.7
14	11.5	20.3	31.9	52.3	81.6	133.6
16	12.3	21.7	34.1	55.9	87.3	142.8
18	13.0	23.0	36.1	59.3	92.6	151.5
20	13.7	24.2	38.1	62.5	97.6	159.7
22	14.4	25.4	39.9	65.6	102.3	167.5
24	15.1	26.5	41.7	68.5	106.9	174.9
26	15.7	27.6	43.4	71.3	111.3	182.0
28	16.3	28.7	45.1	74.0	115.5	188.9
30	16.8	29.7	46.7	76.6	119.5	195.5
32	17.4	30.6	48.2	79.1	123.4	202.0
34	17.9	31.6	49.7	81.5	127.2	208.2
36	18.4	32.5	51.1	83.9	-	-
38	18.9	33.4	52.5	86.2	-	-
40	19.4	34.2	53.9	88.4	-	-
42	19.9	35.1	-	-	-	-
44	20.4	35.9	-	-	-	-
46	20.8	36.7	-	-	-	-
48	21.3	37.5	-	-	-	-
50	21.7	38.3	-	-	-	-
52	22.2	39.0	-	-	-	-
54	22.6	39.8	-	-	-	-
58	23.4	41.2	-	-	-	-
62	24.2	42.6	-	-	-	-

Set Pressure Limits
510 Series - 300 psig/20.7 barg
520 Series - 900 psig/62.1 barg
530 Series - 900 psig/62.1 barg
540 Series - 900 psig/62.1 barg

Note: To determine water capacity at 25% overpressure, multiply the capacity at 10% by 1.066.

**Pressure settings below 15 psig/1.03 barg are non-ASME code.*

KECKLEY

Style SSB-7

Y-Strainer
Stainless Steel (ASTM A 351, Grade CF8M)
600 lb. Threaded
600 lb. Socket Weld

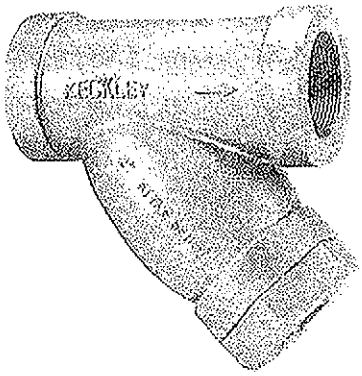

Cast 316 Stainless Steel Y-Strainer

APPLICATIONS

Steam, water, oil or gas where protection from foreign matter in a pipeline is required.

CONSTRUCTION

The Keckley Style SSB-7 strainers are constructed from rugged 316 stainless steel castings and are machined to exacting specifications.

Socket Weld bore is in compliance with ASME B16.11 unless otherwise specified.

FEATURES

The Keckley Style SSB-7 strainer features a machined groove in both the body and cap for proper alignment and to ensure accurate reseating when servicing is required. This strainer has a straight threaded cap and is furnished standard with a NPT blow-off connection. The gasket is 304 stainless steel spiral wound and is compressed between the body and cap (for maximum strength and durability) and designed for high pressure and high temperature service. Keckley Style SSB-7 strainers can be furnished with a stainless steel blow-off plug upon request.

SCREENS

Standard perforated 304 stainless steel screens are spot welded along the seam for maximum strength. Different size perforations and meshes are available in stainless steel, monel, and brass to meet specific media requirements. If media is not indicated, screens for *steam* will be supplied.

SELF CLEANING

Self cleaning is accomplished by opening the valve or drain plug connected to the blow-off port. **Warning:** See Maintenance Instructions on page S6 of the Strainer Information Section for additional precautions and detailed information on servicing the strainer.

WORKING PRESSURES – NON SHOCK

NOM. RATING	MEDIA	1/4" - 3"	3 mm to 80 mm
600# (THREADED & SOCKET WELD)	STEAM	600 PSI @ 1125°F	4138 KPa @ 607°C
	W.O.G.	1440 PSI @ 100°F	9932 KPa @ 38°C

KECKLEY

TECHNICAL DATA
DIMENSIONS AND WEIGHTS

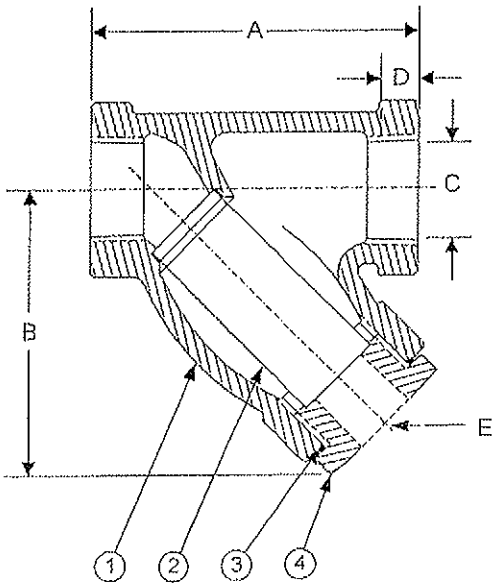

Style SSB-7

Y-Strainer, 600 lb. Threaded & Socket Weld
Cast 316 Stainless Steel (ASTM A 351, Grade CF8M)

PARTS LIST		
ITEM	DESCRIPTION	MATERIAL
1	BODY	CAST STAINLESS STEEL (ASTM A 351, GRADE CF8M)
2	SCREEN	STAINLESS STEEL (304)
3	GASKET	SPIRAL WOUND STAINLESS STEEL (304)
4	CAP	CAST STAINLESS STEEL (ASTM A 351, GRADE CF8M)

Optional: Blow-off Plug, Stainless Steel (304)

STANDARD SCREENS SUPPLIED

SIZE		SCREEN GAGE	SCREEN PERFORATION					
			FOR STEAM		OPEN AREA	FOR LIQUID		OPEN AREA
in	mm		in	mm		in	mm	
1/4 to 3	8 to 80	22	3/64	1.2	33%	1/16	1.6	30%

Standard screens supplied are for steam service, unless otherwise specified.
Options: Other perforations, meshes, and screen materials are available.

SIZE		DIMENSIONS										WEIGHTS	
		A		B		C		D		E			
in	mm	in	mm	in	mm	in	mm	in	mm	in	mm	lbs	kgs
1/4	8	2-15/16	75	2-7/16	62	.555	14	3/8	10	1/4	8	3	1
3/8	10	2-15/16	75	2-7/16	62	.690	18	3/8	10	1/4	8	3	1
* 1/2	15	2-15/16	75	2-7/16	62	.855	22	3/8	10	1/4	8	3	1
3/4	20	3-11/16	94	3	76	1.065	27	1/2	13	3/8	10	5	2
1	25	4-9/16	116	4-5/16	110	1.330	34	1/2	13	3/8	10	6	3
1-1/4	32	4-15/16	125	4-3/16	106	1.675	43	1/2	13	3/4	20	8	4
1-1/2	40	5-9/16	141	4-11/16	119	1.915	49	1/2	13	3/4	20	10	5
2	50	6-15/16	176	6-1/4	159	2.406	61	5/8	16	1	25	16	7
2-1/2	65	12	305	9-3/8	238	2.906	74	5/8	16	1-1/4	32	43	20
3	80	12	305	9-3/8	238	3.535	90	5/8	16	1-1/4	32	43	20

Certified dimensional drawings are available upon request.
†This table reflects only the nearest metric equivalents.

FLOW COEFFICIENTS

Size	C_v	Size	C_v	Size	C_v
1/4"	9.5	1"	30	2-1/2"	129.7
3/8"	9.5	1-1/4"	44.9	3"	161.3
1/2"	9.5	1-1/2"	61		
3/4"	18.7	2"	98		

TOTAL SCREEN AREA

Size	(in^2)	Size	(in^2)	Size	(in^2)
1/4"	2.75	1"	10.08	2-1/2"	78.14
3/8"	2.75	1-1/4"	12.79	3"	78.14
1/2"	2.75	1-1/2"	16.33		
3/4"	4.71	2"	27.04		

*See DETERMINING RATIOS on page S5 of the Strainer Information Section for calculating NET FREE AREA of the screen to inside pipe area.

PRESSURE vs. TEMPERATURE CHART
600# Threaded & Socket Weld Cast 316 Stainless Steel (ASTM A 351, Grade CF8M)

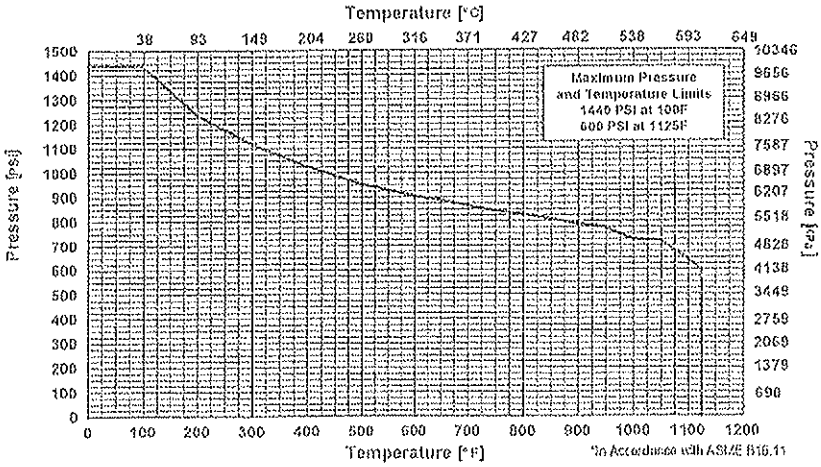

Head Assemblies - (Head & Connection)

Thermocouples & RTD's

REOTEMP INSTRUMENTS

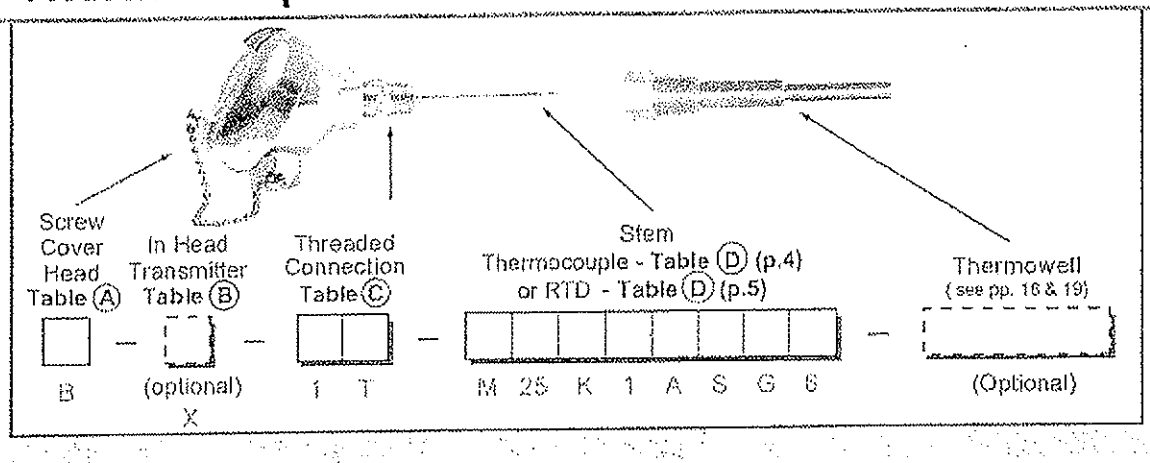

Table (A) - Connection Heads

TYPE B Universal Cast Aluminum	TYPE A Universal Cast Iron
TYPE G 316SS	TYPE H Aluminum Flip-Top
TYPE I Epoxy Coated Aluminum	TYPE W (use with digital display) Aluminum, Window
TYPE E Explosion Proof, Aluminum	TYPE T ATEX Explosion Proof, Aluminum
TYPE J Explosion Proof 316SS	TYPE Z (use with digital display) Explosion Proof, Window
TYPE S Poly Plastic (white)	TYPE C Poly Plastic (Black)

Table (B) - Transmitters - (optional)

In Head Standard	In Head with Digital Display (use window head Z or W)
X = 4-20mA 2-wire trans. R = 4-20mA 2-wire Hart trans.	WX = 4-20mA 2-wire trans. WR = 4-20mA 2-wire Hart trans.

Table (C) - Threaded Connections

Use spring loaded connection with thermowells. Use welded connection when stem goes directly into the process medium.	Spring Loaded		Welded
	Standard 316SS Fittings	Steel Fittings	Standard 316SS Fittings
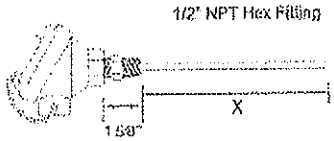	1T	---	1F
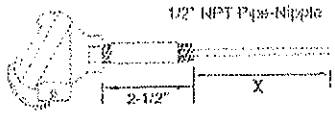	2T	2L	---
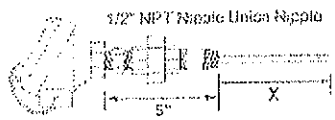	4T	4L	4F
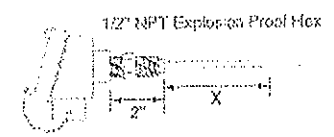	7T	---	---

Table (D) - Stems

Thermocouples see p.4
RTD's see p.5

REOTEMP INSTRUMENTS

Stem Only Assemblies
Thermocouples & RTD's

STEP 1 - Fitting Style

A = Plain stem (choose this for all lead assemblies)

B = Welded SS bushing

C = Male mini plug

D = Female mini jack

F = Male standard plug

G = Female standard jack

H = Spring loaded bushing

P = 1/2" NPT Nipple w/ Bayonet

R = Bayo Cap w/ spring

S = Lead Spring only

T = 1/4" NPT Compression fitting, loose on stem

U = 1/2" NPT Compression fitting, loose on stem

W = Weld Pad

R

STEP 1 - RTD Style

Choose RTD Style from Table A

STEP 2 - Element Material (Pick Standard)

Insert Letter designated below.

PA - Platinum 0.00385 Ω/Ω/°C
P - Platinum 0.00392 Ω/Ω/°C
N - Nickel 0.00672 Ω/Ω/°C
C - Copper 0.00421 Ω/Ω/°C

STEP 3 - Configuration

Insert single-digit number designated below.

1 (std. range) -40°F / 600°F
2 (Extended range) -328°F / 1100°F

STEP 4 - Sheath Diameter

Insert two-digit number designated below

25 = .250 dia. 12 = .125 dia. 18 = .188 dia. 37 = .375 dia.

STEP 5 - Sheath Material

Insert single-digit number designated below. 1 = 316 SS

STEP 6 - Resistance/Resistor Value (Pick Standard)

Insert single-digit number designated below.

2 = 100Ω (Pt. .00385 & .00392)
4 = 1,000Ω (Pt. .00385 only) 5 = 500Ω (Pt. .00385 only)
7 = 120Ω (Nickel only) 8 = 10Ω (Copper only)

STEP 7 - Stem Length (L)

See "X" dimensions in table A

STEP 8 - Number of Leadwires

Single RTD	Leads RTD	Duplex RTD
X	3-wire	XX
Y	4-wire	YY

STEP 9 - Leadwire

If leadwire, add lead wire part # (see p. 7)
Ex. LR2P36T1S

T

STEP 1

Metal Sheathed thermocouple Assembly - insert "M"

STEP 2 - Sheath Diameter

Insert 2 digit number designated below.

06 = .062in. 12 = .125in. 18 = .188in. 25 = .250 in. 37 = .375in. 60 = .500in.

STEP 3 - Thermocouple Type

Insert designation below. K = Chromel Alumel T = Copper Constantan
J = Iron Constantan E = Chromel Constantan

STEP 4 - Sheath Material

Insert single-digit number designated below

1 = 316 SS 3 = 304 SS
2 = 310 SS 5 = Inconel 600

STEP 5 - Style

Choose Thermocouple style from table A

STEP 6 - Number of Elements

S = Single element assembly D = Dual element assembly

STEP 7 - Grounding Option

Elements: G = Grounded E = Exposed
U = Ungrounded DU = Ungrounded, Uncommon

STEP 8 - Stem Length (L)

See "X" dimensions in table A 2.5" 4.0"

STEP 9 - Leadwire

If leadwire, leadwire part # (see p.7)
Ex. LJ2P36F1F

THERMOCOUPLE

Ph (800) 648-7737 Fx (858) 784-0720 www.reotemp.com

PRECISION INSTRUMENT COMPANY

BIMETAL THERMOMETER

90° BACK ANGLE TYPE

STANDARD FEATURES

- All Stainless Construction
- With Glass Lens
- Anti-Parallax Dial
- Vibration Resistant (No Needle Flutter)
- Fast Response To Temperature Change
- Hermetically Sealed (Moisture Proof)
- +/- 1 % Full Scale Accuracy
- Stem Welded To Connection
- Zero Adjustment on Back of Case

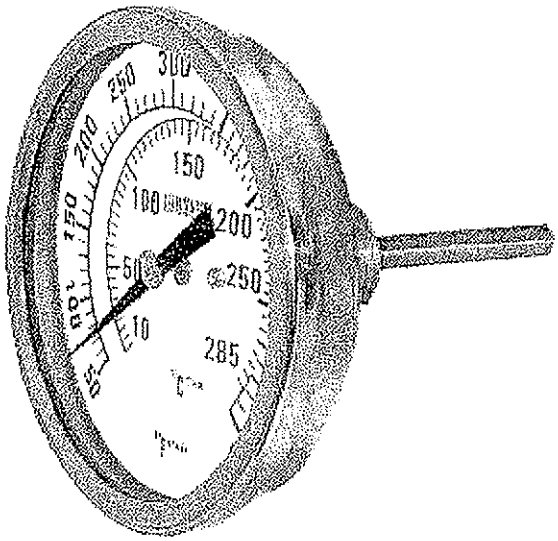

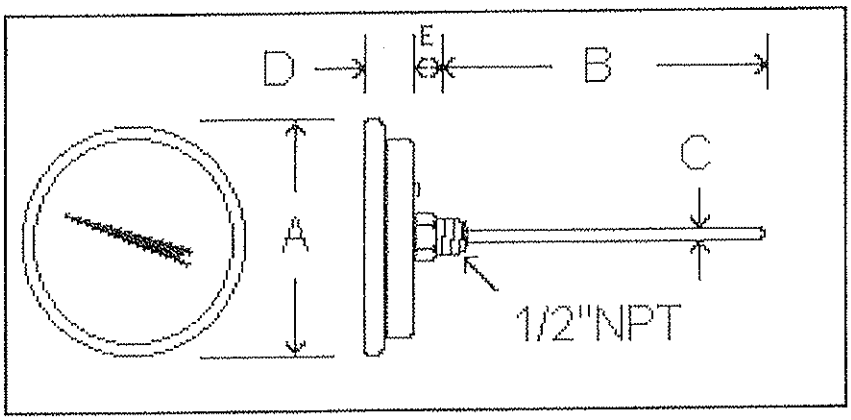

STEM LENGTH*	PART NUMBER	
	3" DIAL	5" DIAL
2 ½	B3B2	B5B2
4"	B3B4	B5B4
6"	B3B6	B5B6
9"	B3B9	B5B9
12"	B3B12	B5B12
15"	B3B15	B5B15
18"	B3B18	B5B18
24"	B3B24	B5B24

		A	B	C	D	E
3" Dial	IN.	3.18"	STEM LENGTH	.25"	.60"	.38"
	MM	80.78	STEM LENGTH	6.45	15.24	9.76
5" Dial	IN.	5.13"	STEM LENGTH	.25"	.67"	.38"
	MM	130.87	STEM LENGTH	6.45	16.95	9.76

STANDARD RANGES*	
CODE	RANGE
AA	-40/120 F & C
BB	-40/160 F & C
EE	0/150 F & C
GG	0/200 F & C
JJ	20/240 F & C
II	0/250 F & C
MM	50/300 F & C
PP	50/400 F & C
RR	50/550 F & C
SS	150/750 F & C
TT	200/1000 F & C

*Note:

- Other Ranges, Stem Lengths And Configurations Are Available Upon Request.
- Thermowells of all sizes and materials of construction are available also.
- Please Call With Any Inquiries.

Bulletin A-352

Bell & Gossett

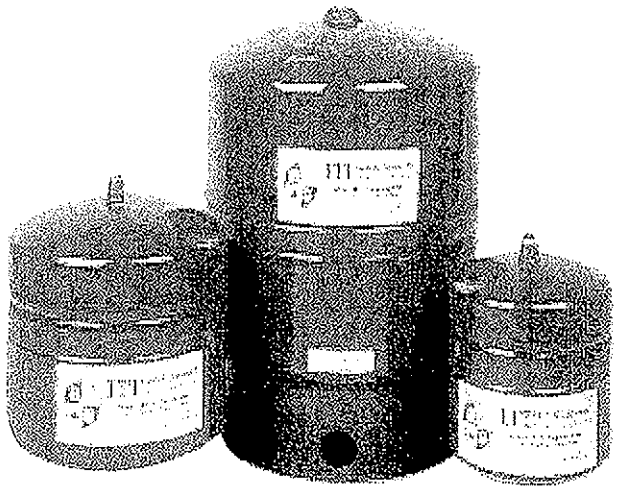

Designed for Closed Hydronic
Heating and Cooling Systems

Non-ASME Expansion Tanks
Series "HFT" Pre-Charged Diaphragm Tanks

- Residential and Light Commercial Applications
- Helps Prevent Excessive Pressures in Heating Systems
- Increases System Performance
- Reduces Oxygen Corrosion
- Prevents Waterlogging
- In-line and Floor Mount Installation
- Maximum Operating Temperature 240°F
- Maximum Working Pressure of 100 PSI

Bell & Gossett

ITT Industries
Engineered for life

Series "HFT" Hydronic Heating Tanks

DESCRIPTION

The Series HFT tank is designed to absorb the force of thermal expansion of heating water and to maintain proper pressurization in a closed hydronic system. The heavy duty butyl diaphragm separates system water from the air in the tank preventing water logging problems.

OPERATING DATA

Maximum working pressure . . . . . .100 PSI (689kPa)
Maximum operating temperature . . . . . .240°F (115°C)

MATERIALS OF CONSTRUCTION

Shell . . . . . .Carbon Steel
Diaphragm . . . . . .Heavy Duty Butyl Rubber

Dimensions: Gallons (Ltrs.), Inches (mm), Weights: LBS. (KG)

MODEL NUMBER	PART NUMBER	VOLUME GALLONS (Liters) TANK	VOLUME GALLONS (Liters) ACCEPTANCE	A HEIGHT	B DIAMETER	SYSTEM CONNECTION	APPROX. SHPG. WT. LBS. (Kg)
HFT-15	1BN201	2 (7.5)	1.0 (3.7)	12⅝ (321)	8 (203)	½" NPTM	5 (2.3)
HFT-30	1BN202	4.4 (16.6)	2.5 (9.4)	15½ (394)	11 (279)		9 (4.1)
HFT-60	1BN203	7.6 (28.7)	2.5 (9.4)	23 (584)	11 (279)		14 (6.4)
HFT-90	1BN204	14 (53)	11.3 (42.8)	21 (533)	15⅜ (390)		23 (10.4)
HFT-30V	1BN205	14 (53)	11.3 (42.8)	24¾ (629)	15⅜ (390)	1" NPTF	25 (11.3)
HFT-40V	1BN206	20 (75.7)	11.3 (42.8)	32½ (826)	15⅝ (390)		33 (14.9)
HFT-60V	1BN207	32 (121.1)	11.3 (42.8)	47½ (1207)	15⅝ (390)		43 (19.5)
HFT-90V	1BN208	44 (166.5)	34 (128.7)	36 (914)	22 (559)	1¼" NPTF	69 (31.2)
HFT-110V	1BN209	62 (234.6)	34 (128.7)	46¾ (1186)	22 (559)		92 (41.7)
HFT-160V	1BN210	86 (325.5)	46 (174.1)	47¼ (1199)	22 (559)		123 (55.8)

Dimensions subject to change. Not to be used for construction purposes. Tanks are factory pre-charged at 12 PSI (83kPa).

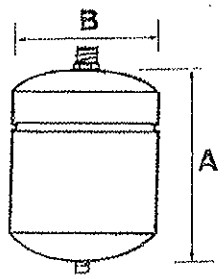

HFT-15 THROUGH HFT-90

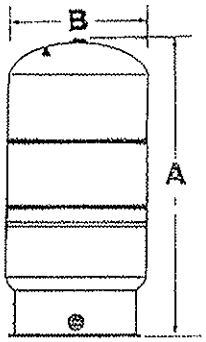

HFT-30V THROUGH HFT-160V

TYPICAL APPLICATION

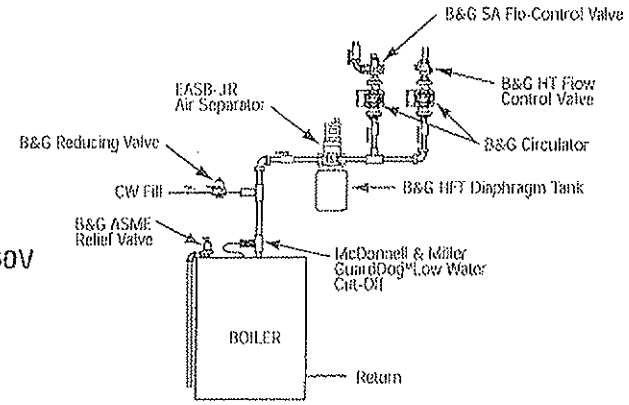

ITT Industries

Bell & Gossett

© COPYRIGHT 2003 BY ITT INDUSTRIES, INC.

PRINTED IN U.S.A. 12-03

USA
Bell & Gossett
8200 N. Austin Avenue
Morton Grove, IL 60053
Phone: (847) 966-3700
Facsimile: (847) 966-9052
www.bellgossett.com

ISO 9001 Certified

INTL.
Bell & Gossett / Export Dept.
8200 N. Austin Avenue
Morton Grove, IL 60053
Phone: (847) 966-3700
Facsimile: (847) 966-8366
www.bellgossett.com

CANADA
Fluid Products Canada
55 Royal Road
Guelph, Ontario,
N1H 1T1, Canada
Phone: (519) 821-1900
www.ittfpc.ca

Resilient Seated Butterfly Valves: 2"-12"

Sanitary & Chemical Applications, Wafer & Lug Bodies

399 SERIES 392

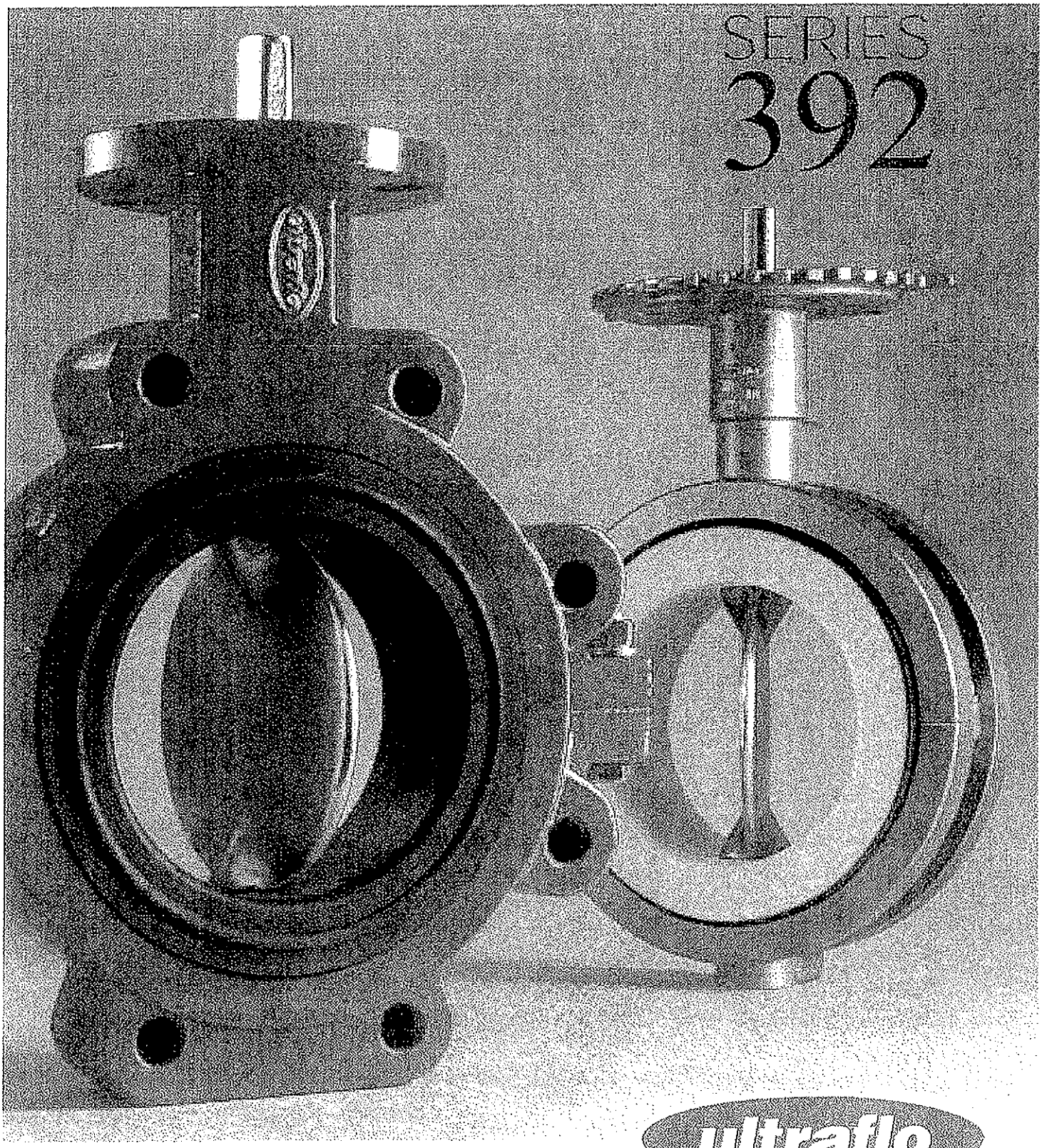

ultraflo®

399/392 SERIES

Ultraflo proudly offers the 399/392 Series sanitary/chemical butterfly valve. The 399/392 Series provides a bi-directional pressure rating of ***150 psi*** with stainless steel disc/stems and ***100 psi*** with encapsulated disc/stems. The 399/392 Series has been designed for applications requiring high flow, minimal product entrapment and complete protection of valve components from the line media. Valve sizes are from ***2"–12"***.
399 valves are ***Wafer*** style bodies offered in ***Stainless Steel, Cast Iron*** and ***Aluminum***. 392 valves are ***Lug*** style bodies offered in ***Stainless Steel*** and ***Nodular Iron***.

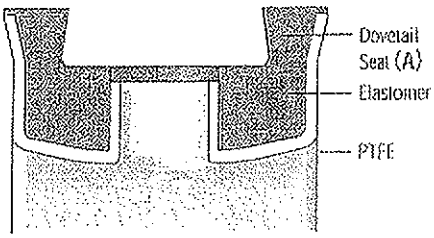

PTFE encapsulated seat. Section view at stem hole.

Ultraflo's resilient ***Seat*** (A) is the heart of all 300 Series valves. The seat incorporates a dovetail retention system ensuring positive alignment and ease of assembly. The PTFE liner, as shown above, is isostatically molded to extend up through the stem hole, completely isolating the elastomer backing from the line media in the event of primary seal failure. All 300 Series seats include a flange seal molded into the seat face providing a positive seal with all popular flanges. Valves installed in dead end service (downstream flange removed) are derated to 75 psi for 2"–12" valves, 50 psi for 14"–24" valves.

Features ***Primary and Secondary Seals*** (B) The primary seal is formed by an interference fit between the disc hub and the seat flat. The secondary seal is an interference fit between the stem and seat stem hole. These seals prevent line media from coming into contact with other valve components. Ultraflo's ultrathin one-piece ***Disc/Stem*** (C) provides a high flow capacity with smooth flow characteristics that greatly reduce line media pressure drops. The disc edge is CNC machined and hand polished to produce bubble tight shut off, minimum torque and longer seat life. The ***Upper Stem Bushing*** (D) absorbs operator side thrusts, provides precision alignment to ensure less wear and lowers operating torque. The ***Lower Stem Bushing*** (E) eliminates gaulding and frozen stems. Both upper and lower bushings are heavy duty non-corrosive thermoplastic polymer. A ***Stem Packing*** (F) prevents external contaminants from entering the stem bore.

The ***Split Body*** (G) design simplifies field maintenance by eliminating the need for special tools or presses during installation of replacement seats. All 300 Series valve bodies are designed to fit between ASME/ANSI 125 or 150 lb. flanges. ***Body Recesses*** (H) accommodate lightweight flanges. ***Body Bolt*** (I) materials are zinc plated carbon steel or stainless steel as standard.

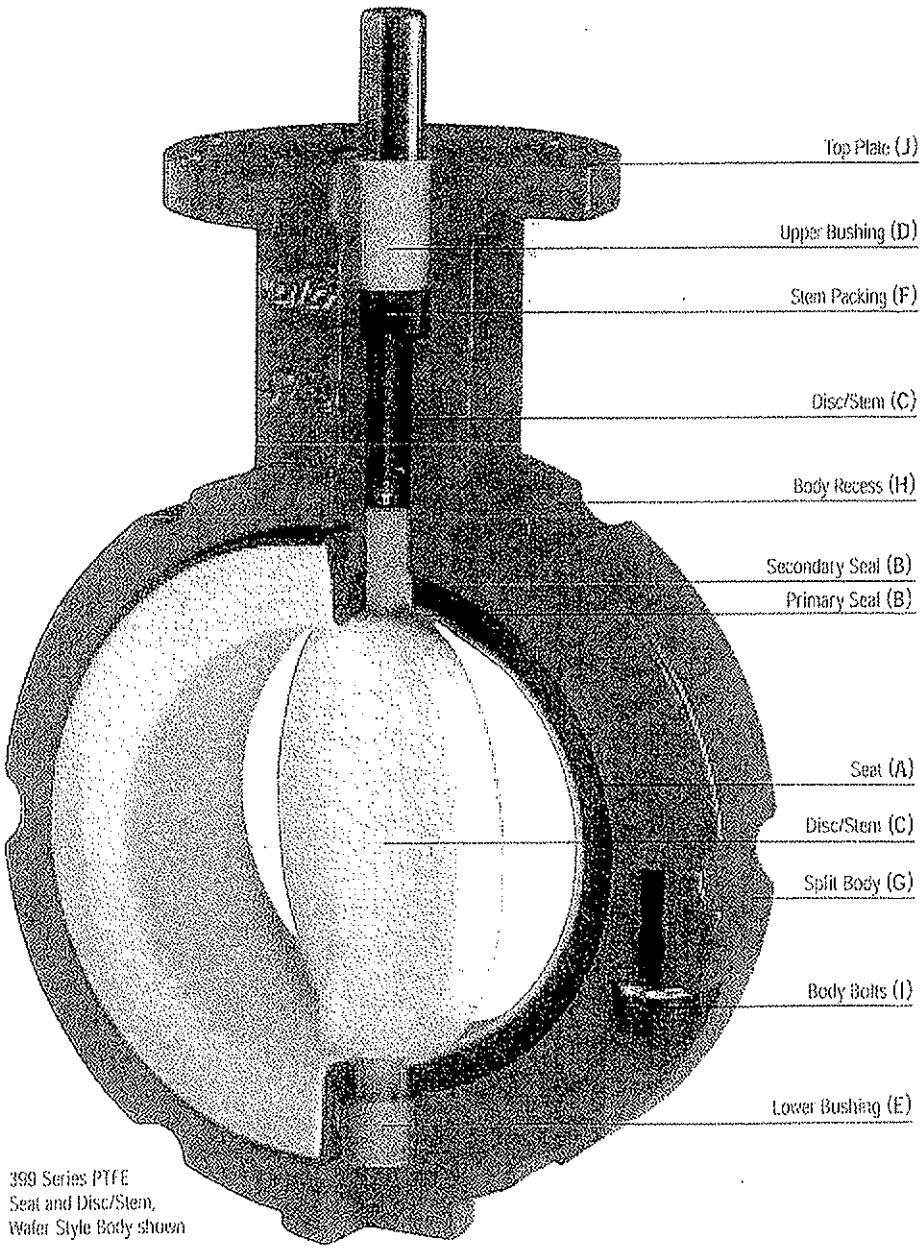

399 Series PTFE Seat and Disc/Stem, Wafer Style Body shown

399/392 SERIES

Ideal for Sanitary, Chemical and Corrosive Applications The 300 Series is one of the true sanitary butterfly valves on the market today. The two-piece split body allows for a one-piece investment cast disc/stem with a smooth finish free of porosity, voids or cracks. This design provides complete protection from particle entrapment. A variety of coatings are available for chemical and abrasive service as well as sanitary applications.

All sizes of Cast Iron, Nodular Iron and Aluminim bodies and 8"-12" Stainless Steel bodies have a CNC machined *Top Plate* (J) with standardized drilling for total actuator and operator interchangeability. A handle notch plate is supplied with the manual handle kit.

2"-6" Stainless Steel valve bodies feature an integrally cast *Throttling Top Plate* with a self draining recess ensuring complete drainage of wash-down media.

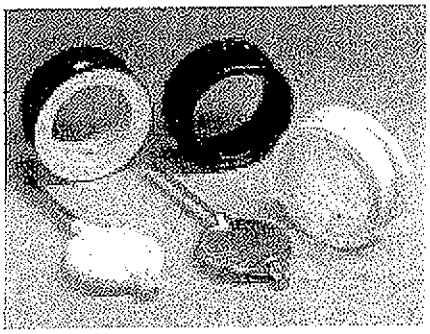

For high corrosive and sanitary applications, discs/stems are offered in high polish or satin finish 316 Stainless Steel, PTFE encapsulated and a variety of other coatings. Bodies are offered in investment cast 316 Stainless Steel for these demanding applications.

Seats are available as standard in PTFE, Nitrile, EPDM, Buna and FKM. All compounds other than FKM are FDA approved.

All Ultraflo valves are tested to 110% of pressure rating for bubble tight shut off before shipment.

All 399/392 Series valves are designed to meet MSS SP67 dimensional standards.

Components

Item	Description	Qty.
1	Split Body	1
2	Seat	1
3	Disc	1
4	Upper Bushing	1
5	Stem Packing	1
6	Lower Bushing	1
7	Body Bolt	2
8	Lock Washer	2

Materials of Construction

Bodies: Cast Iron, Nodular Iron and Investment Cast 316 Stainless Steel in both wafer and lug style split bodies. Aluminum bodies are available in wafer only.

Seats: PTFE, EPDM, Nitrile, Buna, FKM. Nitrile and EPDM seats are available in FDA food grade white.

Disc/Stems: 17-4 Stainless Steel and Investment Cast 316 Stainless Steel, available with satin or high polish finish. PTFE encapsulated and other custom disc coatings are available.

Upper and Lower Bushings: Thermoplastic Polymer

Stem Packing: Buna-N

Body Bolts and Lock Washers: Zinc Plated Carbon Steel or Stainless Steel

Temperature Range of Seats

Type	Minimum	Maximum
EPDM	-40°F	+250°F
Buna	0°F	+212°F
Nitrile	-20°F	+275°F
PTFE	-20°F	+300°F
FKM	0°F	+400°F

399 Series Cast Iron Wafer Style Body

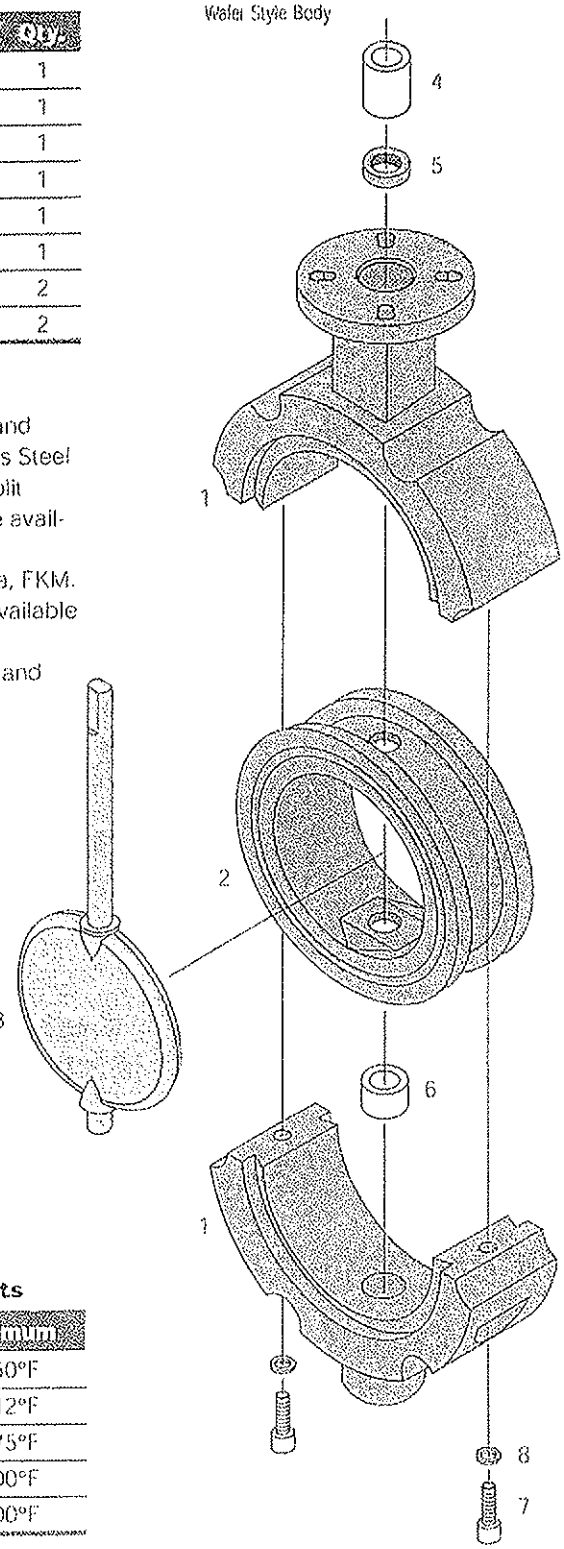

399/392 SERIES

Dimensions

Valve Size In.	Valve Size mm	A	B	C	D	E	F	G	H	Q	R	S	T	U	Lug Data BC	Lug Data Tap
2	50	4.00	.375	.563	1.250	4.063	4.125	2.00	1.625	1.313	3.250	.438	2.760	.375	4.750	.625-11
3	75	4.00	.375	.563	1.250	5.00	5.375	3.00	1.750	2.563	3.250	.438	2.760	.375	6.00	.625-11
4	100	4.00	.438	.625	1.250	6.00	6.875	4.00	2.00	3.563	3.250	.438	2.760	.375	7.50	.625-11
5	125	4.00	.438	.625	1.250	6.00	7.750	5.00	2.125	4.531	3.250	.438	2.760	.375	8.50	.750-10
6	150	4.00	.500	.750	1.250	6.625	8.750	5.750	2.125	5.438	3.250	.438	2.760	.438	9.50	.750-10
8	200	6.00	.625	.875	1.250	8.313	11.00	7.750	2.50	7.438	5.00	.563	4.020	.438	11.750	.750-10
10	250	6.00	—	1.125*	2.00	9.125	13.375	9.750	2.50	9.531	5.00	.563	4.020	.438	14.250	.875-9
12	300	6.00	—	1.125*	2.00	10.645	16.125	11.750	3.00	11.50	5.00	.563	4.020	.438	17.00	.875-9

All 399/392 Series are designed to meet MSS SP67 dimensional standards.

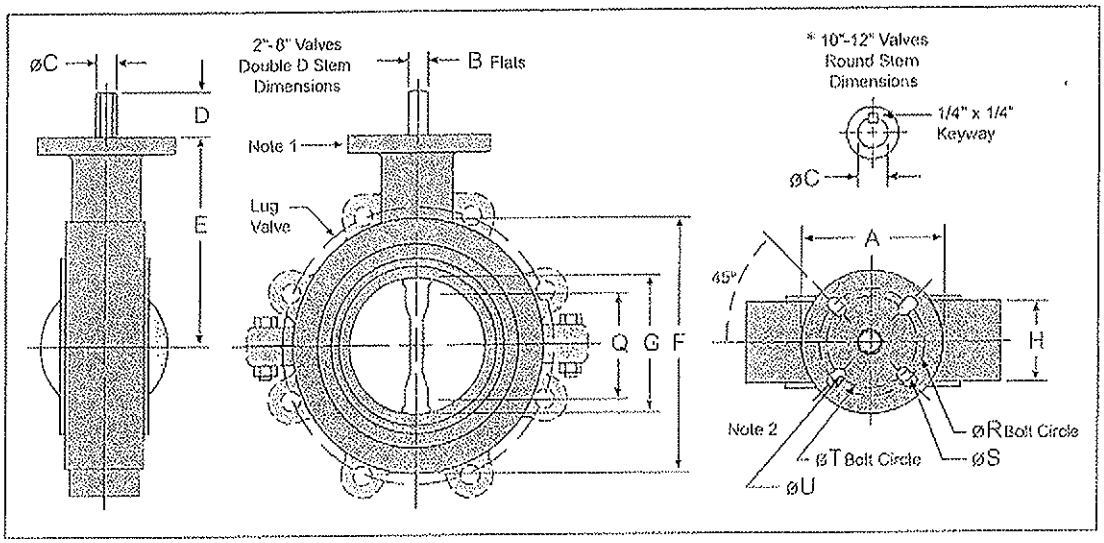

Notes:

1. 2"-6" Stainless Steel Valve Bodies have an integral Throttling Top Plate. 8", 10" and 12" SS Valves, and all sizes Cast Iron, Nodular Iron & Aluminum Valves have standard Top Flanges, notch plates are supplied with handle.
2. Bolt Circle T and Hole Diameter U meet ISO 5211 standards for Top Flange Drilling:
   2"-6" = F7
   8"-12" = F12
   Not applicable to Aluminum bodies.

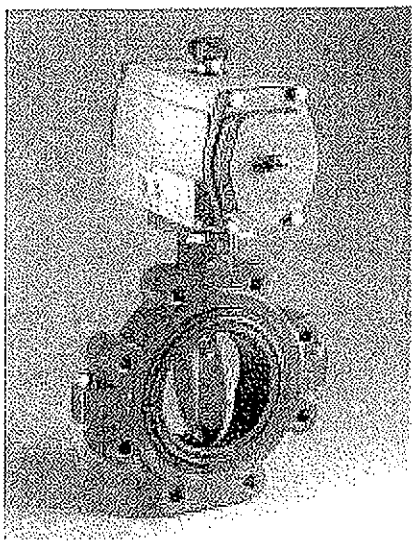

Operator and Actuator Mounting

Ultraflo has designed the 300 Series operator mounting Top Flange to ISO 5211 specifications for direct mounting of manual operators and actuators. Designed to recognized industrial standards, the Double D stem connection provides a secure connection with most actuators eliminating the need for brackets.

Ultraflo offers a wide range of automation products including handles, gear operators, rack and pinion pneumatic actuators, pneumatic cylinder and wrench arm assemblies, electric actuators, pneumatic and electro-pneumatic positioners, solenoids, valve position indicators, proximity and limit switches.

Flange Requirements

The valve O.D. and flange bolt circle must share a common center line. The valve is designed to be placed between ASME/ANSI 125 or 150 lb. flanges.

The data represented in this brochure is for general information only. Manufacturer is not responsible for acceptability of these products in relation to system requirements. Consult your Ultraflo representative for specific performance data and proper materials selection for your particular application.

© 2005 Ultraflo Corporation. All rights reserved. 399/392S 3/05

Ultraflo Corporation
A Subsidiary of Bray International, Inc.
8 Trautman Industrial Drive
Ste. Genevieve MO 63670
800.950.1762 Fax 573.883.8882
www.ultraflovalve.com

SURE 100

NEMA 4, 6, 7 AND 9 DIMENSIONAL INFORMATION

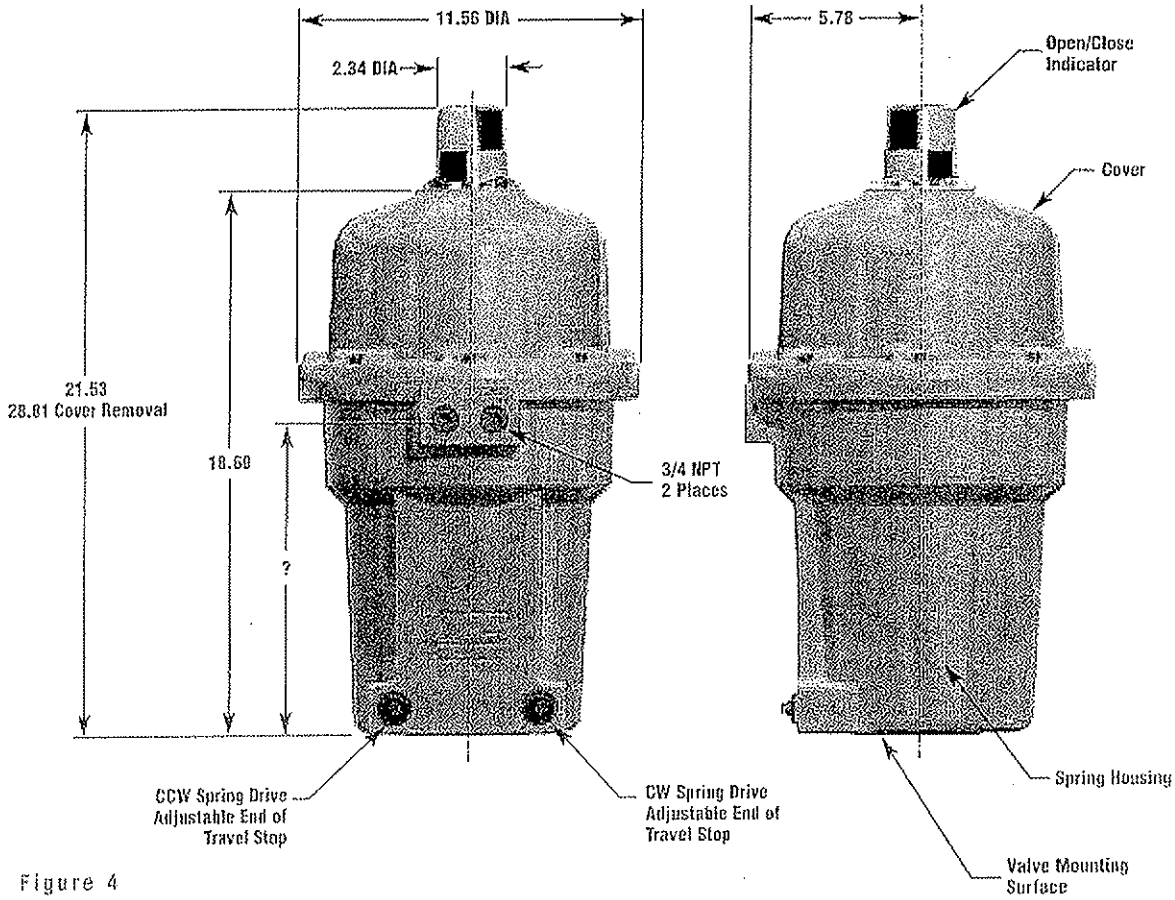

Figure 4

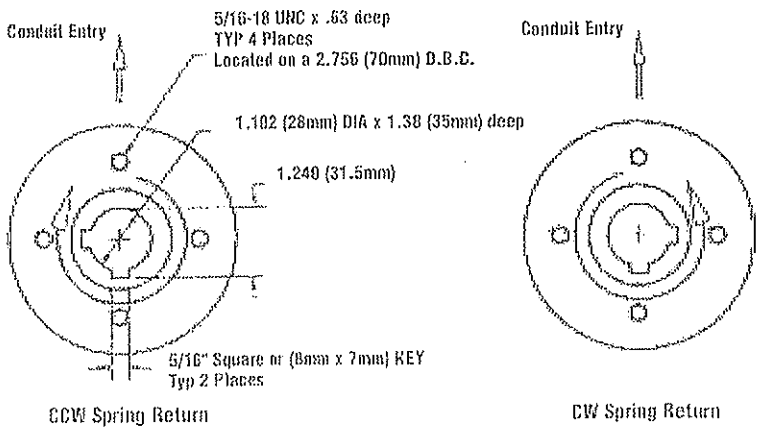

Figure 5

NOTES

1. Direction of rotation is based on viewing actuator from top.
2. Actuator shown in power fail position.
3. Mounting geometry complies with ISO 5211 flange type F07 (except bolt thread).

*4. Two keys are recommended for driving device.

Dwg. No. 90-853

CAUTION To prevent ignition of hazardous atmospheres, do not remove actuator cover while circuits are live. **CAUTION**

Operation

Power On: The electric motor drives the gear train, which in turn winds the spring and turns the device. An internal limit switch de-energizes the motor and the brake, which holds the return spring and device in position.

Power Off: When the current is interrupted by either a control signal or a power failure, the return spring drives the device to its original position.

Note: It is recommended that the actuator be driven electrically in both directions for normal operation to prolong cycle life.

Maintenance

Gear train is permanently lubricated at the factory for the average life of the actuator. No further attention is required.

Thermal Overload

The internal thermal overload switch de-energizes the motor and prevents overheating of the motor windings due to excessive operation, stalling or high ambient temperatures.

Duty Cycle

The maximum duty-cycle to be expected without interruption by thermal cut-off at an ambient temperature of 65C° is 25% (3 "OFF" times for every 1 "ON" time) for the 5 and 10 second design, and 50% (1 "OFF" time for every 1 "ON" time) for the 30 second design.

Storage

The Surepowr actuator must be stored in a clean, dry, temperature controlled building which is protected from the weather. Precautions shall be taken to prevent condensation inside or outside the actuator. If there is insufficient external temperature and humidity control, internal heaters must be installed and energized to protect the unit against condensation from extreme temperature variations. The actuators shall be stored off the floor on suitable pallets and must be covered with an unsealed dust protector allowing side and bottom ventilation.

Isolation Relays

To operate multiple actuators in parallel from a single signal requires isolating relays in the field wiring. Consult Factory.

Troubleshooting (New Unit)

Note: Most actuator problems occur due to incorrect cam/travel limit switch setting, or the use of an external travel stop on the device that the actuator is operating.

Problem 1: Actuator is receiving electric power but the motor does not respond.

Instructions:

1a. Check actuator nameplate to insure correct model, voltage type and spring return direction.

1b. Check all wiring against installation wiring diagram.

1c. **Actuator with clockwise fail position:** Using a volt meter, check that power is available between terminals 1 and 2. Then check the voltage between terminal 1 (common) and the two legs of the motor and capacitor. The meter should indicate a value equal to or greater than the supply voltage indicated on the actuator nametag.

Actuator with counter-clockwise fail position: Using a volt meter, check that power is available between terminals 1 and 3. Then check the voltage between terminal 1 (common) and the two legs of the motor and capacitor. The meter should indicate a value equal to or greater than the supply voltage indicated on the actuator nametag.

If power is not present at the motor or capacitor leads:

- Cam adjustments are required
- Switch malfunction
- Improper wiring

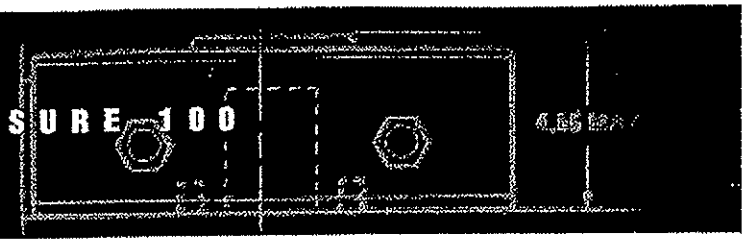

Problem 2: Actuator is receiving electric power but the motor only hums.
Instructions: 2a .Perform steps 1a through 1c listed above.
2b. Check to insure the brake is completely disengaged when power is applied.

Problem 3: Actuator runs but operation is erratic.
Instructions: 3a. Perform steps 1a through 1c listed above.
3b. Check ambient temperature. Standard Surepowr actuators have a maximum ambient operating temperature rating of 65°C.
3c. Check duty cycle (frequency of operation). See above for details.
3d. Ensure that actuator is not continuously stalled.

Problem 4: Motor runs continuously in spring return direction after actuator output shaft has stopped.
Instructions: 4a. Adjust spring return side travel cam/switch so that the cam trips the switch before the shaft stops motion.

Problem 5: Motor runs continuously but output shaft does not turn.
Instructions: 5a. Check for power to the bridge rectifier and clutch solenoid.

Note: Standard Surepowr actuators are manufactured with thermal overload protectors in series with the motor common. Should any of the above problems cause the protector to open, it will automatically reset when the motor temperature is lowered to a safe level.

Locating and Ordering Parts

For ease and accuracy in identifying and ordering spare or replacement parts, submit the following information from unit nameplate.

1. Serial Number
2. Model Number
3. Voltage

Copyright© 2002 by Textstream Operations
All rights reserved. Printed in U.S.A.
Reproduction in whole or in part is prohibited by law
Bulletin No. 6005
2.5M 3/02 SPI

1020 Rankin Rd., Houston, TX 77073
P.O. Box 60706, Houston, TX 77205
Tel: (281) 443-7000
Fax: (281) 443-6308
Fax: (281) 443-4802

SHARPE® VALVES

STAINLESS STEEL

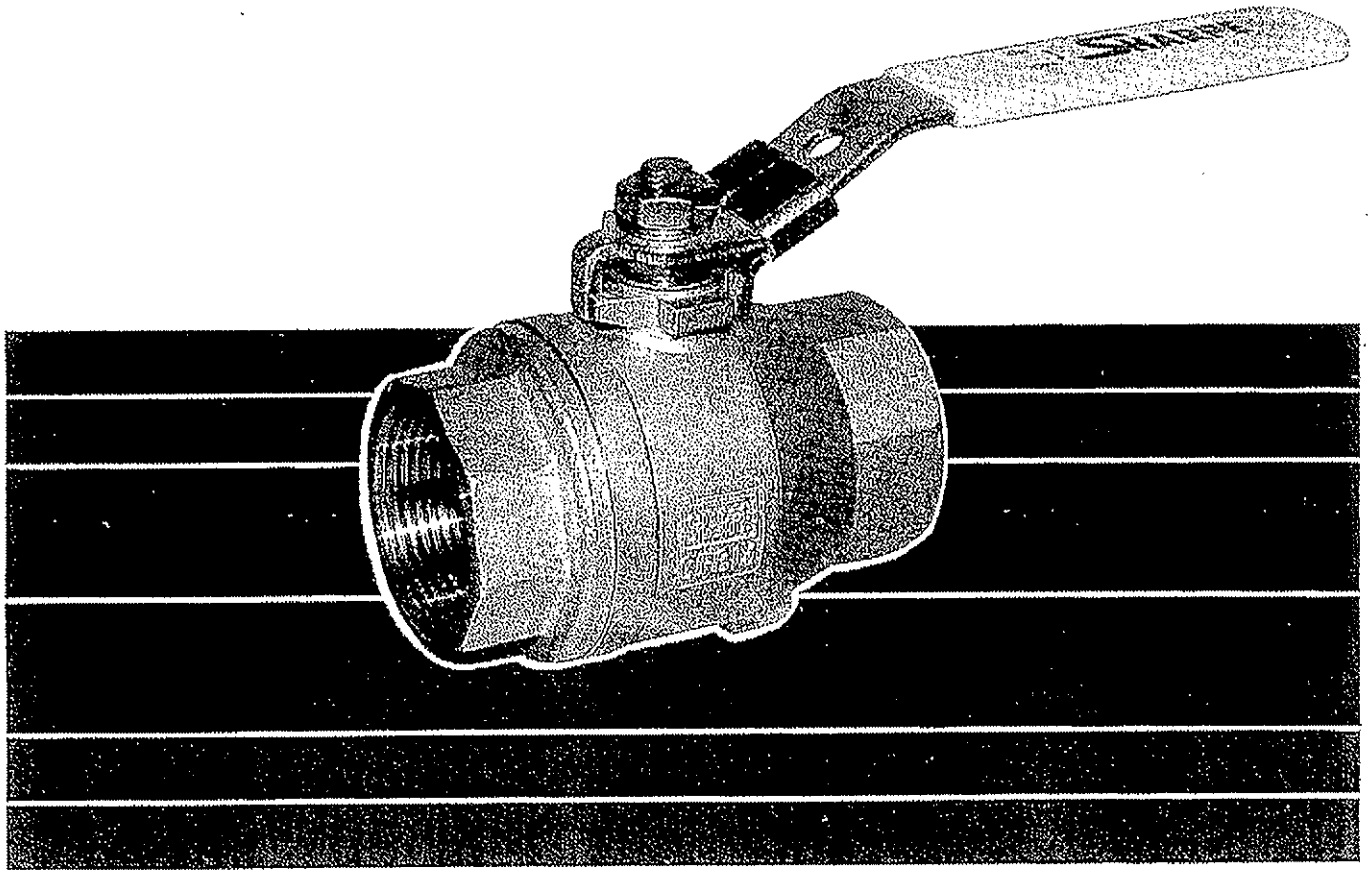

50M76
THREADED FULL PORT BALL VALVE

Threaded Full Port Ball Valve

CLASS 1000 WOG
ASTMA-351
BLOWOUT PROOF STEM
LOCKING DEVICE AND
OVAL HANDLE OPTIONAL

Fig. No. 50M76

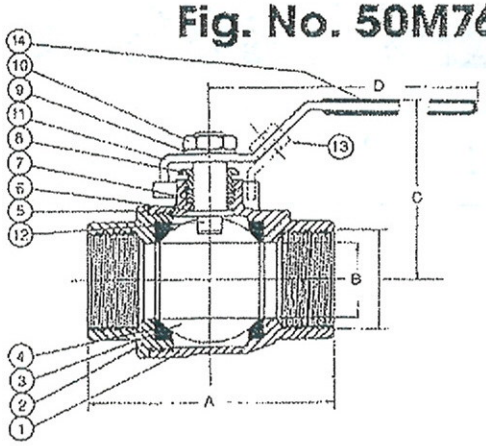

PART NAME	MATERIAL
1 Body	CF8M
2 Cap	CF8M
3 Ball	SST. 316
4 Seal	R.TFE
5 Joint Gasket	PTFE
6 Thrust Washer	PTFE
7 Stem Packing	PTFE
8 Gland Nut	SST.304
9 Handle Washer	SST. 304
10 Handle Nut	SST. 304
11 Handle	SST. 304
12 Stem	SST. 316
13 Latch Lock	SST. 304
14 Cover	Plastic

DIMENSIONS IN INCHES				
Size/Dim	A	B	C	D
1/4	2.00	0.43	1.81	4.00
3/8	2.00	0.43	1.81	4.00
1/2	2.36	0.50	1.89	4.00
3/4	2.75	0.80	2.04	5.00
1	3.25	1.00	2.44	5.75
1-1/4	3.80	1.25	2.56	5.75
1-1/2	4.33	1.50	2.96	7.50
2	5.27	2.00	3.25	7.50
2-1/2	6.58	2.50	5.00	9.73
3	7.55	3.00	5.40	9.73

SIZE (INCHES)	APPROX. CV	WEIGHT (LBS)
1/4	6	0.5
3/8	6	0.5
* 1/2	24	0.6
3/4	35	1.1
1	47	2.00
1-1/4	81	3.00
1-1/2	105	4.85
2	241	8.00
2-1/2	319	14.00
3	580	20.00

CV-the volume of water in Gal./Min. that will pass through a given valve with a pressure drop of 1PSI

Pressure Temperature Ratings

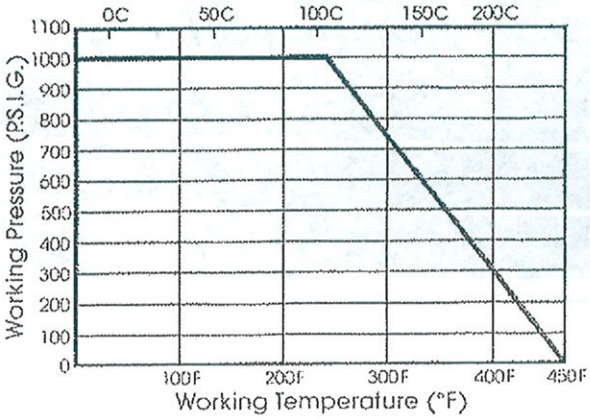

SHARPE® VALVES
A DIVISION OF Sharon

Toll-Free 1-877-7SHARPE
E-Mail:sharpediv@aol.com
www.sharpevalves.com

504 West Wrightwood Ave.
Elmhurst , IL 60126

Due to continuous development of our product range we reserve the right to change the dimensions and information contained in this leaflet as required
Teflon® is a registered trademark of E. I. DuPont

Model T-710

1 PC. Stainless Steel Ball Valve

LEGEND VALVE

NO	PART	MATERIAL
1	HANDLE NUT	304 S.S.
2	HANDLE	304 S.S.
3	PACKING GLAND	304 S.S.
4	STEM PACKING	*TEFLON
5	THRUST WASHER	*TEFLON
6	SEATS	*TEFLON
7	STEM	316 S.S.
8	BALL	316 S.S.
9	BODY	316 S.S.
10	SEAT RETAINER	316 S.S.
11	LATCH-LOCK	304 S.S.

*TEFLON IS A REGISTERED TRADEMARK OF DUPONT

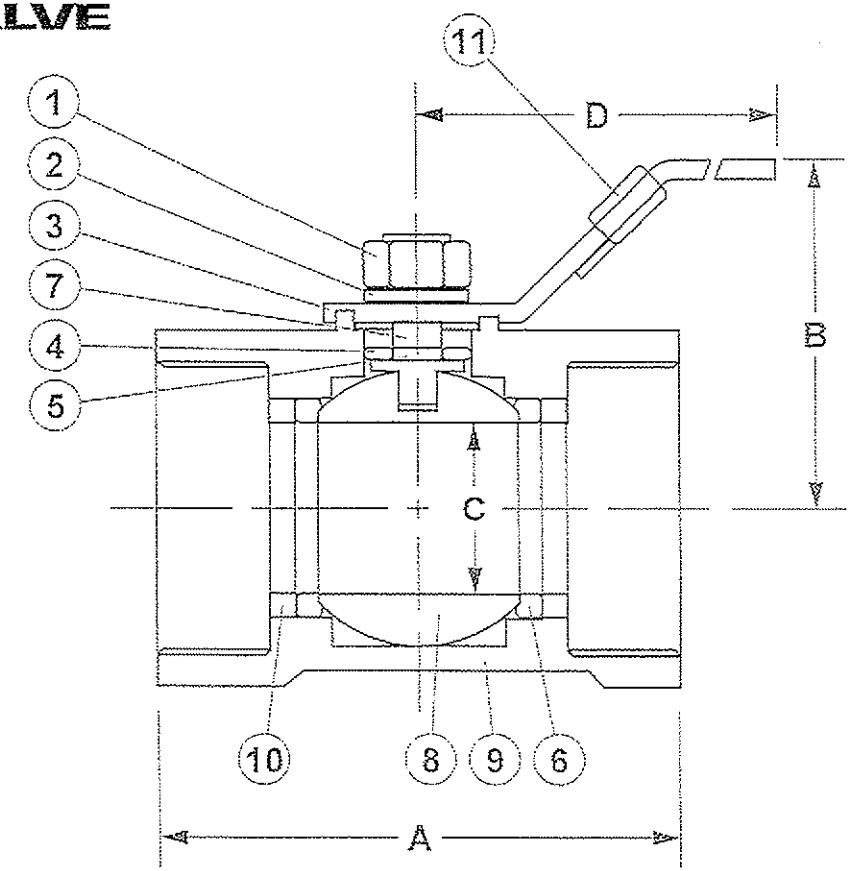

SIZE	1/4"	3/8"	1/2"	3/4"	1"	1-1/4"	1-1/2"	2"				
A	1.59	1.75	2.23	2.11	2.82	3.09	3.29	3.94				
B	1.50	1.46	1.73	1.85	2.00	2.13	2.64	3.07				
C	2.00	.28	.36	.49	.59	.79	1.38	1.50				
D	2.75	3.25	3.90	4.00	4.50	1.38	1.50	5.50				

- NOTES:
- 150 P.S.I. W.S.P.
- 800 P.S.I. W.O.G.

Check-All VALVE

FLANGE INSERT

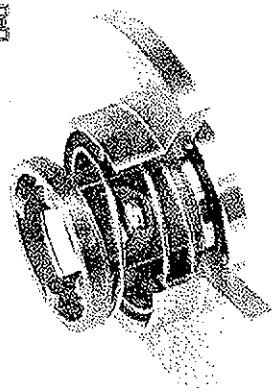

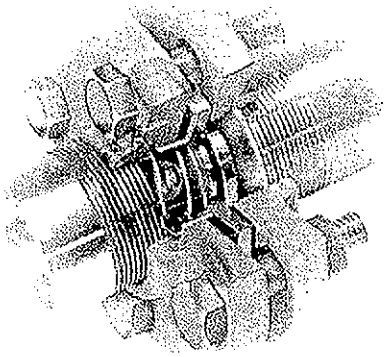

PED 97/23/EC COMPLIANT

Valve shown in flanges.
Flanges not included.

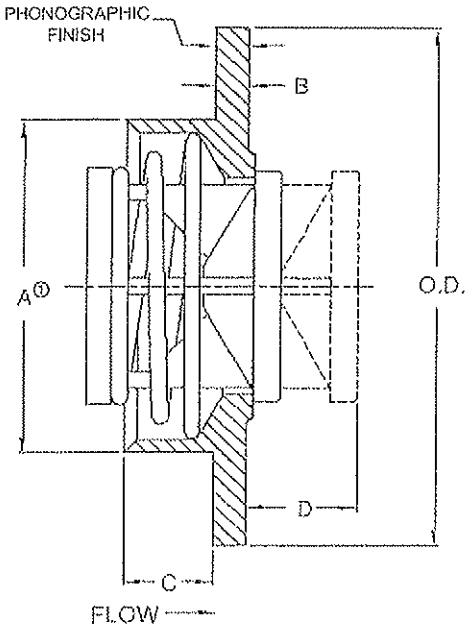

Flange Insert valves are the ultimate check valves in flanged systems. They provide the simplest most economical way to install check valves in a piping system, the valve body automatically positions the valve and holds it in place while bolts are being installed and tightened. All that is required is two gaskets in place of the one normally used in a flanged joint. Consult the factory for additional installation guidelines.

Flange Insert valves are designed to fit between two mating ANSI flanges. The "Spring Housing" designated by the "A" dimension is designed to be inserted into the upstream pipe, thereby centering it in the pipe. Therefore, there must be clearance between the spring housing and the pipe or flange. Generally speaking, the FIV Class 150 and 300 valves (F1) are designed for standard schedule pipe or Class 150 or 300 flanges, and the FIV Class 600 (F6) valves are designed for schedule 80 pipe or Class 600 flanges.

Flange Insert valves can be used as check valves, low pressure relief valves, and vacuum breakers by simply using different spring settings.

Body Material ②	Nominal Pipe Size	Non-Shock Pressure Rating		
		ANSI Class 150	ANSI Class 300	ANSI Class 600
316 Stainless Steel (SS) Carbon Steel (CS) Alloy 20 (A2) *Hastelloy*® C (HC) *Hastelloy*® B (HB) *Inconel*® 600 (IG) *Monel*® (MO) Titanium (TI)	1/2 - 4	X	X	X
	5 - 20	X		
Brass (BR)	1/2 - 4	X	X	
	5 - 20	X		
PTFE (TF)	1/2 - 1-1/2	55 PSIG @100°F ③		
	2 - 6	20 PSIG @ 100°F ③		
PVC (PV)	1/2 - 6	200 PSIG @ 100°F ③		

①Check "A" dimension for clearance with pipe ID. Generally "A" dimension is designed for use in standard schedule pipe for class 150 & 300 valves (F1). Order class 600 (F6) valves for schedule 80 pipe.

②Consult the factory for material grade information.

③Consult the factory for reduced P–T rating above 100°F. Standard spring material is 316 Stainless Steel.

FIV (F1, F6, FP) Dimensions

Nominal Pipe Size	Size Code	ANSI Rating & Material	A	B	C	D①	O.D.	Orifice ② Diameter
1/2	D	150 & 300 600 PTFE & PVC	0.605 N/A 0.600	1/4	0.26 N/A 0.27	0.53	1-3/8	0.348
3/4	F	150 & 300 600 PTFE & PVC	0.762 0.719 0.720	1/4	0.26 0.24 0.26	0.61	1-3/4	0.464
1	H	150 & 300 600 PTFE & PVC	1.000 0.922 0.930	1/4	0.36 0.32 0.36	0.78	2	0.593
1-1/4	I	150 & 300 600 PTFE & PVC	1.340 1.234 1.240	1/4	0.44 0.39 0.44	0.85	2-1/2	0.890
1-1/2	J	150 & 300 600 PTFE & PVC	1.570 1.490 1.490	1/4	0.44 0.40 0.50	1.01	2-7/8	1.135
2	K	150 & 300 600 PTFE & PVC	2.005 1.890 1.890	1/4	0.49 0.43 0.52	1.19	3-5/8	1.385
2-1/2	L	150 & 300 600	2.407 2.266	1/4	0.66 0.59	1.43	4-1/8	1.555
3	M	150 & 300 600 PTFE & PVC	3.006 2.844 2.865	5/16	0.70 0.64 0.73	1.59	5	2.025
4	N	150 & 300 600 PTFE & PVC	3.964 3.766 3.766	3/8	1.00 0.96 1.00	1.91	6-3/16	2.560
5	O	150	4.985	1/2	1.07	2.12	7-5/16	3.280
6	P	150 PTFE & PVC	6.003 5.700	3/8 9/16	1.52 1.55	2.46	8-1/2	3.875
8	Q	150	7.919	1/2	2.27	3.30	10-5/8	5.110
10	R	150	9.958	1/2	2.84	3.47	12-3/4	6.380
12	S	150 Brass Other Metals	11.876	5/8 1/2	3.12 3.24	4.14	15	7.670
14	T	150 Brass Other Metals	13.062	11/16 1/2	3.18 3.37	4.42	16-1/4	8.460
16	U	150 Brass Other Metals	14.938	3/4 9/16	3.69 3.88	5.02	18-1/2	9.650
18	V	150 Brass Other Metals	16.814	7/8 5/8	3.87 4.12	5.60	21	10.860
20	W	150 Brass Other Metals	18.750	15/16 11/16	3.88 4.13	6.23	23	12.110

①Maximum nominal dimension for a fully open valve with no spring.
②Due to molding process, orifice in plastic valves may vary.
Sizes 5" and larger are only available in class 150. *Consult the factory if using Schedule 80 pipe.*

Flange Insert

Flow Curves assume Schedule 40 pipe
For Water at 72°F

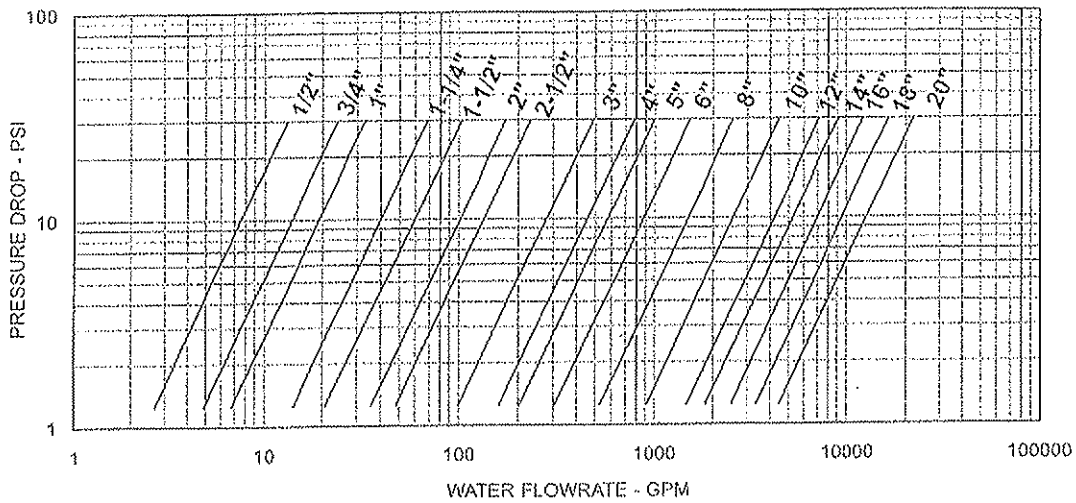

Note: All flow curves and Cv values presume the valves are fully open with 1/2 PSI cracking pressure springs. Consult the factory for more information.

STYLE FIV (F1, F6, FP) C_V VALUES & VALVE WEIGHTS					
C_V	SIZE	SS & CS	BRASS	PTFE	PVC
2.4	1/2	1.7 oz.	1.9 oz.	0.5 oz.	0.3 oz.
4.4	3/4	2.9 oz.	3.2 oz.	0.8 oz.	0.5 oz.
6.1	1	4.2 oz.	4.6 oz.	1.1 oz.	0.7 oz.
12.7	1-1/4	7.0 oz.	7.4 oz.	1.9 oz.	1.4 oz.
18.8	1-1/2	9.5 oz.	9.8 oz.	2.6 oz.	1.7 oz.
32.0	2	16.3 oz.	17.3 oz.	3.8 oz.	2.6 oz.
42.5	2-1/2	1.4 lb.	1.5 lb.	---	---
89.0	3	2.3 lb.	2.6 lb.	9.6 oz.	6.1 oz.
144	4	4.5 lb.	4.9 lb.	1.2 lb.	12.7 oz.
182	5	7.8 lb.	8.3 lb.	---	---
277	6	10.4 lb.	11.7 lb.	1.8 lb.	1.2 lb.
470	8	21.2 lb.	26.4 lb.	---	---
810	10	36 lb.	42 lb.	---	---
1320	12	54 lb.	70 lb.	---	---
1650	14	74 lb.	93 lb.	---	---
2230	16	105 lb.	130 lb.	---	---
3010	18	157 lb.	201 lb.	---	---
4000	20	207 lb.	262 lb.	---	---

C_V values assume Schedule 40 pipe
Consult the factory for Flow Formulae

HOW TO ORDER
CHECK-ALL STYLE FIV (F1, F6, FP)

BODY MATERIAL

ALLOY 20	=	A2
BRASS	=	BR
CARBON STEEL	=	CS
HASTELLOY® B	=	HB
HASTELLOY® C	=	HC
INCONEL® 600	=	I6
MONEL®	=	MO
PVC	=	PV
316SS	=	SS
PTFE	=	TF
TITANIUM	=	TI

Temperature ratings

SPRING CRACKING PRESSURES

CRACKING PRESSURE① (PSI)		DECIMAL FORMAT
0.000 TO 0.999	=	.XXX
1.00 TO 9.99	=	X.XX
10.0 TO 99.9	=	XX.X
NO SPRING	=	NOSPRG

STANDARD CRACKING PRESSURES②

.125 (Sizes D-H Only) .500 1.50 (Sizes D-H Only) 3.50 (Sizes D-J Only)

SPECIAL OPTIONS

T = FEP ENCAPSULATED SPRING
Temperature rating
Contact the factory for more options

F

VALVE STYLE

Class 150 & 300 (FIT UP TO SCH 40 PIPE)	=	F1
Class 600 (FIT UP TO SCH 80 PIPE)	=	F6
PTFE & PVC	=	FP

SIZE
(SEE BELOW)

SEAT MATERIAL③

AFLAS®	=	AS
BUNA-N	=	BN
EPDM	=	EP
KALREZ®	=	KZ
"METAL-TO-METAL"	=	MT
NEOPRENE	=	NE
PTFE	=	TF
VITON®	=	VT

Temperature ratings

SPRING MATERIAL

316 SS	=	SS
HASTELLOY® C	=	HC
INCONEL® X-750	=	IX
MONEL®	=	MO
17-7PH SS	=	PH
TITANIUM	=	TI

Temperature ratings

STYLE F1
(All Metals)
SIZES

1/2	=	D
3/4	=	F
1	=	H
1-1/4	=	I
1-1/2	=	J
2	=	K
2-1/2	=	L
3	=	M
4	=	N
5	=	O
6	=	P
8	=	Q
10	=	R
12	=	S
14	=	T
16	=	U
18	=	V
20	=	W

STYLE F6
(Except Brass)
SIZES

1/2	=	D
3/4	=	F
1	=	H
1-1/4	=	I
1-1/2	=	J
2	=	K
2-1/2	=	L
3	=	M
4	=	N

STYLE FP
(PTFE or PVC Only)
SIZES

1/2	=	D
3/4	=	F
1	=	H
1-1/4	=	I
1-1/2	=	J
2	=	K
3	=	M
4	=	N
6	=	P

Note: Consult the factory for an optional Flag Tag which indicates that a check valve is present in the line.

Listed above are the most common material selections. Please contact the factory for additional options.

①Shown for part numbering format only: Contact factory for non-standard cracking pressure availability.
②.500 PSI is the only standard cracking pressure for spring materials other than Stainless Steel. Cracking pressure tolerance is +/- 15%. 1/8 PSI springs are not recommended for installations with flow vertical down.
③PTFE seals are not resilient. Consult factory for allowable leakage rates.

Resilient Seated Butterfly Valves: 2"-12"

Sanitary & Chemical Applications, Wafer & Lug Bodies

399 SERIES 392

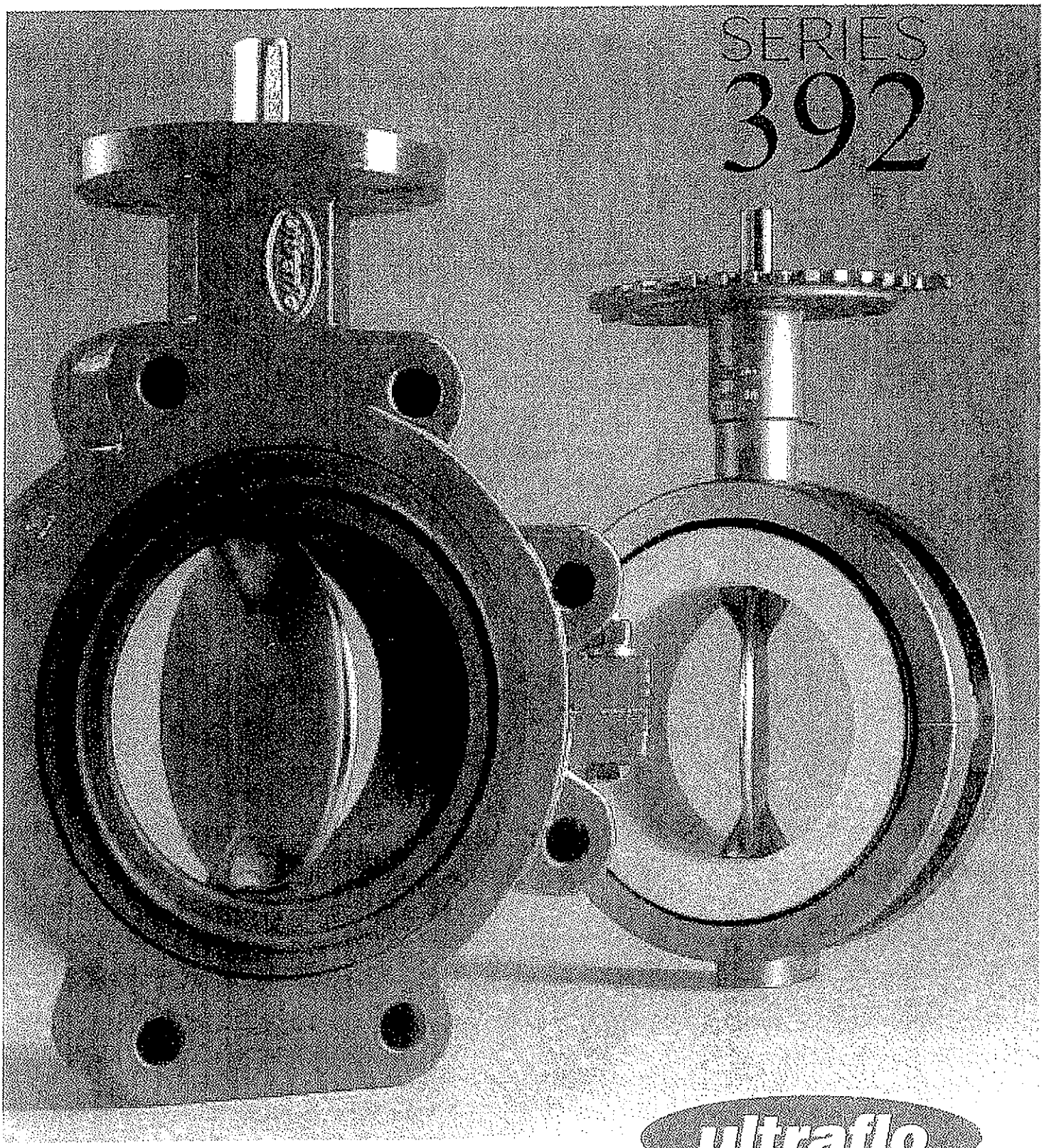

ultraflo®

399/392 SERIES

Ultraflo proudly offers the 399/392 Series sanitary/chemical butterfly valve. The 399/392 Series provides a bi-directional pressure rating of ***150 psi*** with stainless steel disc/stems and ***100 psi*** with encapsulated disc/stems. The 399/392 Series has been designed for applications requiring high flow, minimal product entrapment and complete protection of valve components from the line media. Valve sizes are from ***2"–12"***.
399 valves are ***Wafer*** style bodies offered in ***Stainless Steel, Cast Iron*** and ***Aluminum***. 392 valves are ***Lug*** style bodies offered in ***Stainless Steel*** and ***Nodular Iron***.

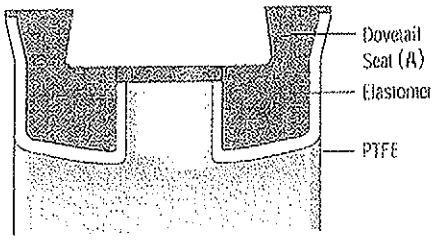

PTFE encapsulated seat. Section view at stem hole.

Ultraflo's resilient ***Seat*** (A) is the heart of all 300 Series valves. The seat incorporates a dovetail retention system ensuring positive alignment and ease of assembly. The PTFE liner, as shown above, is isostatically molded to extend up through the stem hole, completely isolating the elastomer backing from the line media in the event of primary seal failure. All 300 Series seats include a flange seal molded into the seat face providing a positive seal with all popular flanges. Valves installed in dead end service (downstream flange removed) are derated to 75 psi for 2"–12" valves, 50 psi for 14"–24" valves.

Features ***Primary and Secondary Seals*** (B) The primary seal is formed by an interference fit between the disc hub and the seat flat. The secondary seal is an interference fit between the stem and seat stem hole. These seals prevent line media from coming into contact with other valve components. Ultraflo's ultrathin one-piece ***Disc/Stem*** (C) provides a high flow capacity with smooth flow characteristics that greatly reduce line media pressure drops. The disc edge is CNC machined and hand polished to produce bubble tight shut off, minimum torque and longer seat life. The ***Upper Stem Bushing*** (D) absorbs operator side thrusts, provides precision alignment to ensure less wear and lowers operating torque. The ***Lower Stem Bushing*** (E) eliminates gaulding and frozen stems. Both upper and lower bushings are heavy duty non-corrosive thermoplastic polymer. A ***Stem Packing*** (F) prevents external contaminants from entering the stem bore.

The ***Split Body*** (G) design simplifies field maintenance by eliminating the need for special tools or presses during installation of replacement seats. All 300 Series valve bodies are designed to fit between ASME/ANSI 125 or 150 lb. flanges. ***Body Recesses*** (H) accommodate lightweight flanges. ***Body Bolt*** (I) materials are zinc plated carbon steel or stainless steel as standard.

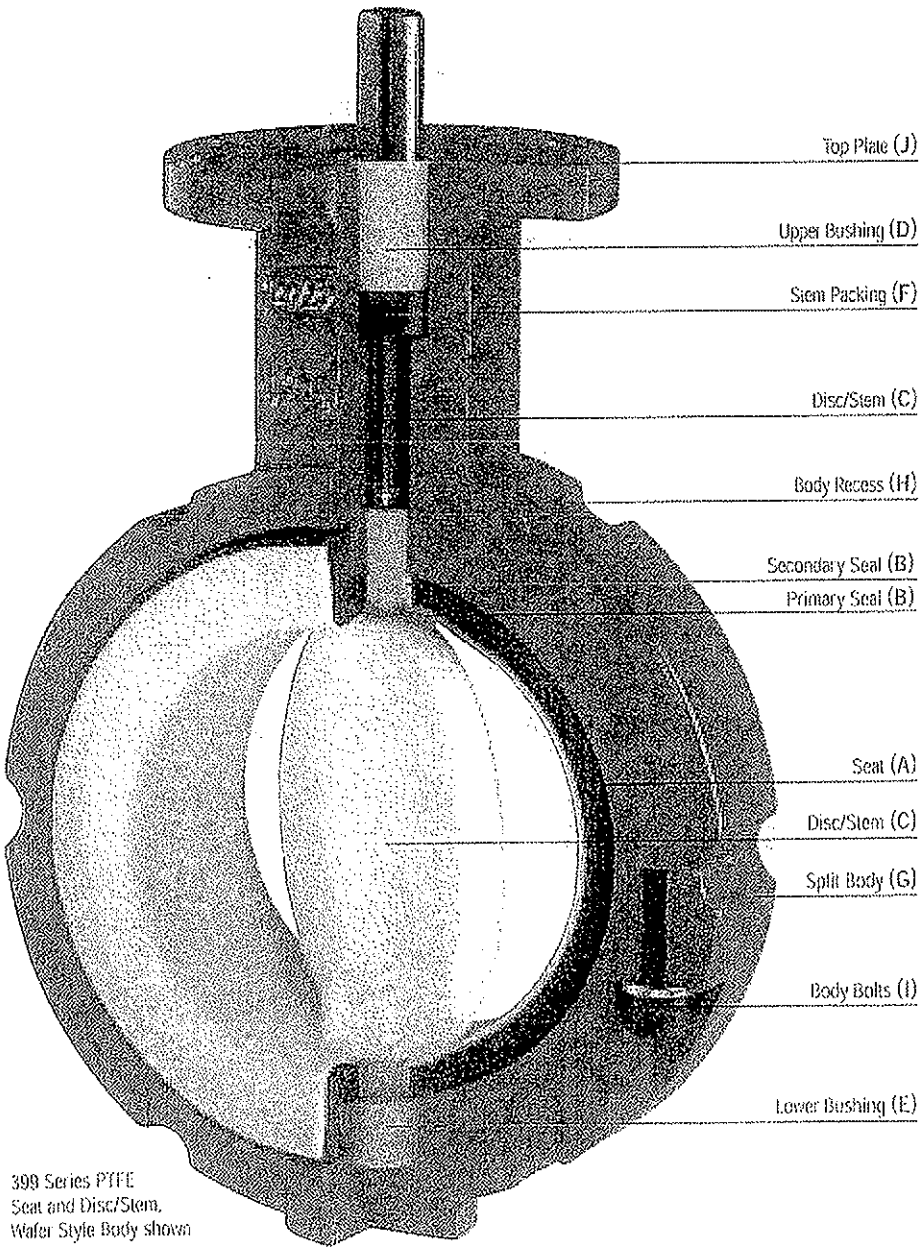

399 Series PTFE Seat and Disc/Stem, Wafer Style Body shown

399/392 SERIES

Ideal for Sanitary, Chemical and Corrosive Applications The 300 Series is one of the true sanitary butterfly valves on the market today. The two-piece split body allows for a one-piece investment cast disc/stem with a smooth finish free of porosity, voids or cracks. This design provides complete protection from particle entrapment. A variety of coatings are available for chemical and abrasive service as well as sanitary applications.

All sizes of Cast Iron, Nodular Iron and Aluminim bodies and 8"-12" Stainless Steel bodies have a CNC machined *Top Plate (J)* with standardized drilling for total actuator and operator interchangeability. A handle notch plate is supplied with the manual handle kit.

2"-6" Stainless Steel valve bodies feature an integrally cast *Throttling Top Plate* with a self draining recess ensuring complete drainage of wash-down media.

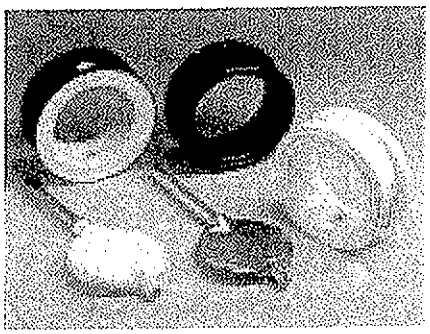

For high corrosive and sanitary applications, discs/stems are offered in high polish or satin finish 316 Stainless Steel, PTFE encapsulated and a variety of other coatings. Bodies are offered in investment cast 316 Stainless Steel for these demanding applications.

Seats are available as standard in PTFE, Nitrile, EPDM, Buna and FKM. All compounds other than FKM are FDA approved.

All Ultraflo valves are tested to 110% of pressure rating for bubble tight shut off before shipment.

All 399/392 Series valves are designed to meet MSS SP67 dimensional standards.

Components

Item	Description	Qty.
1	Split Body	1
2	Seat	1
3	Disc	1
4	Upper Bushing	1
5	Stem Packing	1
6	Lower Bushing	1
7	Body Bolt	2
8	Lock Washer	2

Materials of Construction

Bodies: Cast Iron, Nodular Iron and Investment Cast 316 Stainless Steel in both wafer and lug style split bodies. Aluminum bodies are available in wafer only.

Seats: PTFE, EPDM, Nitrile, Buna, FKM. Nitrile and EPDM seats are available in FDA food grade white.

Disc/Stems: 17-4 Stainless Steel and Investment Cast 316 Stainless Steel, available with satin or high polish finish. PTFE encapsulated and other custom disc coatings are available.

Upper and Lower Bushings: Thermoplastic Polymer

Stem Packing: Buna-N

Body Bolts and Lock Washers: Zinc Plated Carbon Steel or Stainless Steel

Temperature Range of Seats

Type	Minimum	Maximum
EPDM	-40°F	+250°F
Buna	0°F	+212°F
Nitrile	-20°F	+275°F
PTFE	-20°F	+300°F
FKM	0°F	+400°F

399 Series Cast Iron Wafer Style Body

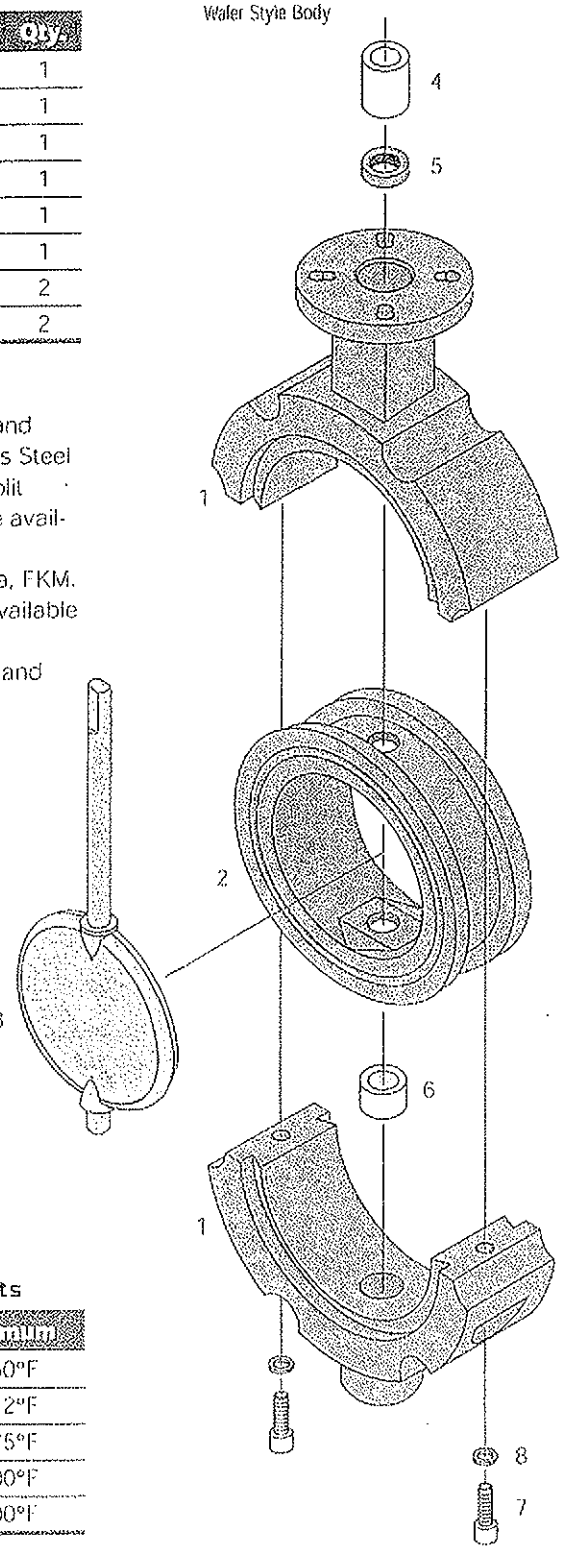

399/392 SERIES

Dimensions

Valve Size Inc	mm	A	B	C	D	E	F	G	H	Q	R	S	T	U	Lug Data BC	Tap
2	50	4.00	.375	.563	1.250	4.063	4.125	2.00	1.625	1.313	3.250	.438	2.760	.375	4.750	.625-11
3	75	4.00	.375	.563	1.250	5.00	5.375	3.00	1.750	2.563	3.250	.438	2.760	.375	6.00	.625-11
4	100	4.00	.438	.625	1.250	6.00	6.875	4.00	2.00	3.563	3.250	.438	2.760	.375	7.50	.625-11
5	125	4.00	.438	.625	1.250	6.00	7.750	5.00	2.125	4.531	3.250	.438	2.760	.375	8.50	.750-10
6	150	4.00	.500	.750	1.250	6.625	8.750	5.750	2.125	5.438	3.250	.438	2.760	.438	9.50	.750-10
8	200	6.00	.625	.875	1.250	8.313	11.00	7.750	2.50	7.438	5.00	.563	4.020	.438	11.750	.750-10
10	250	6.00	—	1.125*	2.00	9.125	13.375	9.750	2.50	9.531	5.00	.563	4.020	.438	14.250	.875-9
12	300	6.00	—	1.125*	2.00	10.645	16.125	11.750	3.00	11.50	5.00	.563	4.020	.438	17.00	.875-9

All 399/392 Series are designed to meet MSS SP67 dimensional standards.

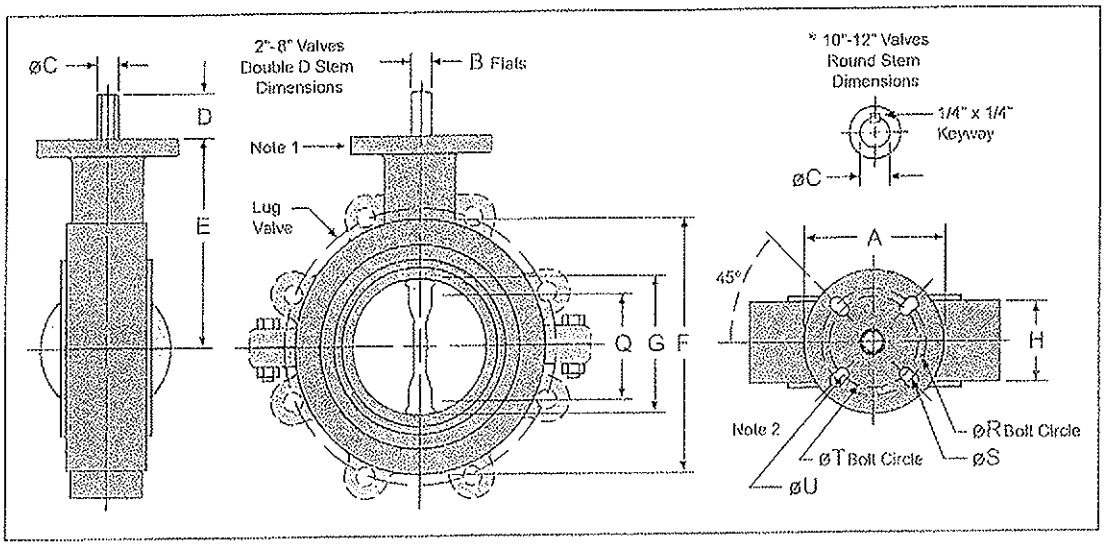

Notes:

1. 2"-6" Stainless Steel Valve Bodies have an integral Throttling Top Plate. 8", 10" and 12" SS Valves, and all sizes Cast Iron, Nodular Iron & Aluminum Valves have standard Top Flanges, notch plates are supplied with handle.
2. Bolt Circle T and Hole Diameter U meet ISO 5211 standards for Top Flange Drilling: 2"-6" = F7 8"-12" = F12 Not applicable to Aluminum bodies.

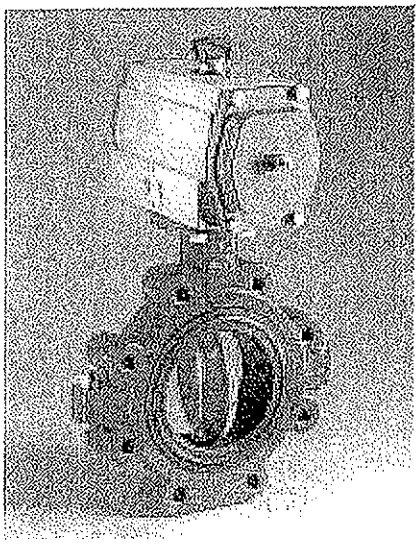

Operator and Actuator Mounting

Ultraflo has designed the 300 Series operator mounting Top Flange to ISO 5211 specifications for direct mounting of manual operators and actuators. Designed to recognized industrial standards, the Double D stem connection provides a secure connection with most actuators eliminating the need for brackets.

Ultraflo offers a wide range of automation products including handles, gear operators, rack and pinion pneumatic actuators, pneumatic cylinder and wrench arm assemblies, electric actuators, pneumatic and electro-pneumatic positioners, solenoids, valve position indicators, proximity and limit switches.

Flange Requirements

The valve O.D. and flange bolt circle must share a common center line. The valve is designed to be placed between ASME/ANSI 125 or 150 lb. flanges.

The data represented in this brochure is for general information only. Manufacturer is not responsible for acceptability of these products in relation to system requirements. Consult your Ultraflo representative for specific performance data and proper materials selection for your particular application.

© 2005 Ultraflo Corporation. All rights reserved. 399/392S 3/05

Ultraflo Corporation
A Subsidiary of Bray International, Inc.
8 Trautman Industrial Drive
Ste. Genevieve MO 63670
800.950.1762 Fax 573.883.8882
www.ultraflovalve.com

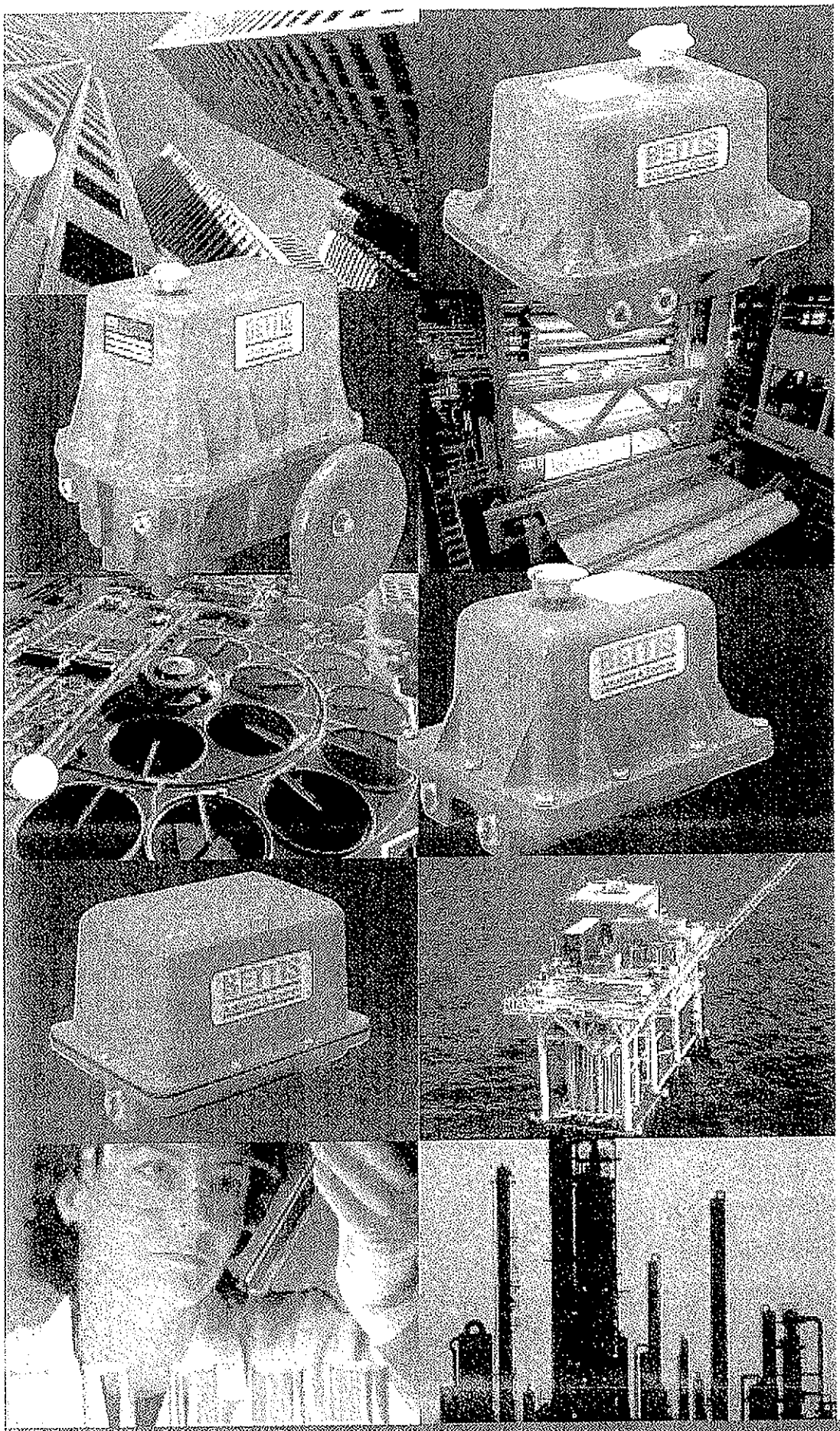

TorqPlus™

Electric Valve Actuators and Controls

EMERSON.

EMERSON. CONSIDER IT SOLVED.

Torque 350 IN/LB – 1600 IN/LB

The Engineered Solution

Bettis TorqPlus quality line of electric actuators are designed for quarter turn applications — ball, butterfly and plug valves; dampers; vents and similar uses. TorqPlus actuators are manufactured in a wide range of guaranteed output torques and operating speeds to fit your specific requirements.

The Model EM-500 Series are designed for the entire mid-range of torques and operating speeds, with a rugged versatility that is hard to beat.

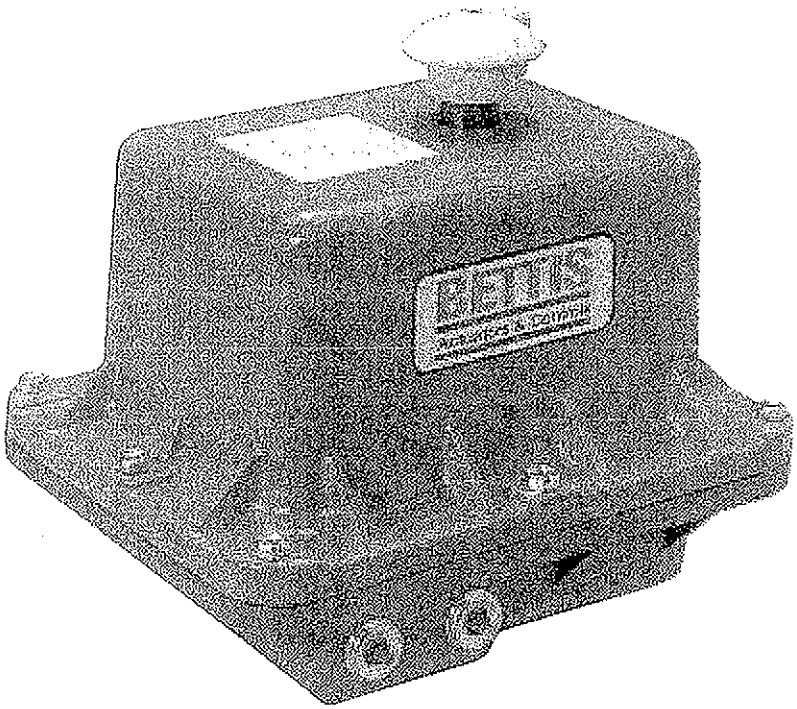

STANDARD FEATURES

- Two year warranty
- Heater and thermostat installed in all actuators
- Hardened steel spur gear train is permanently lubricated
- Hardened steel drive shaft
- Female DIN/ISO F07 output drive and F07/F10 bolt pattern or male output drive
- Operating temperatures:
  -40° F with standard heater activated, to +140° F
- Single phase capacitor run motor with thermal overload protection
- Enclosure certified to weatherproof C.S.A. specifications that conform to NEMA type 1, 2, 3, 3R, 4, 4X and 12
- Declutchable manual override with position indicator
- Dual 1/2-inch NPT machined conduit entrances
- Captive hex bolts on enclosure
- Operational in any mounting orientation
- Two single pole double throw end of travel stop limit switches with adjustable cams
- Weight: 17 to 18 lbs

OPTIONAL FEATURES

- Electromechanical brake
- Standard 1KΩ potentiometer, other ranges provided upon request
- Electronic proportional positioner for 4-20mA, 1-5 VDC, or 0-10 VDC control input, and 4-20mA output signal
- Relay control
- Optional voltages
  220 VAC 50/60 Hz single phase
  12/24 VDC
  24 VAC
- Maximum of four additional single pole double throw auxiliary limit switches with adjustable cams
- Handwheel
- Dual purpose weatherproof and explosion-proof enclosures are certified by Canadian Standards Association for services: Class I Groups C,D, Division I; Class II Groups E,F,G Division I that conform to NEMA type 7 and 9
- Canadian Standards Association general purpose for electrical certification available under file #LR90062

Torque 350 IN/LB – 1600 IN/LB

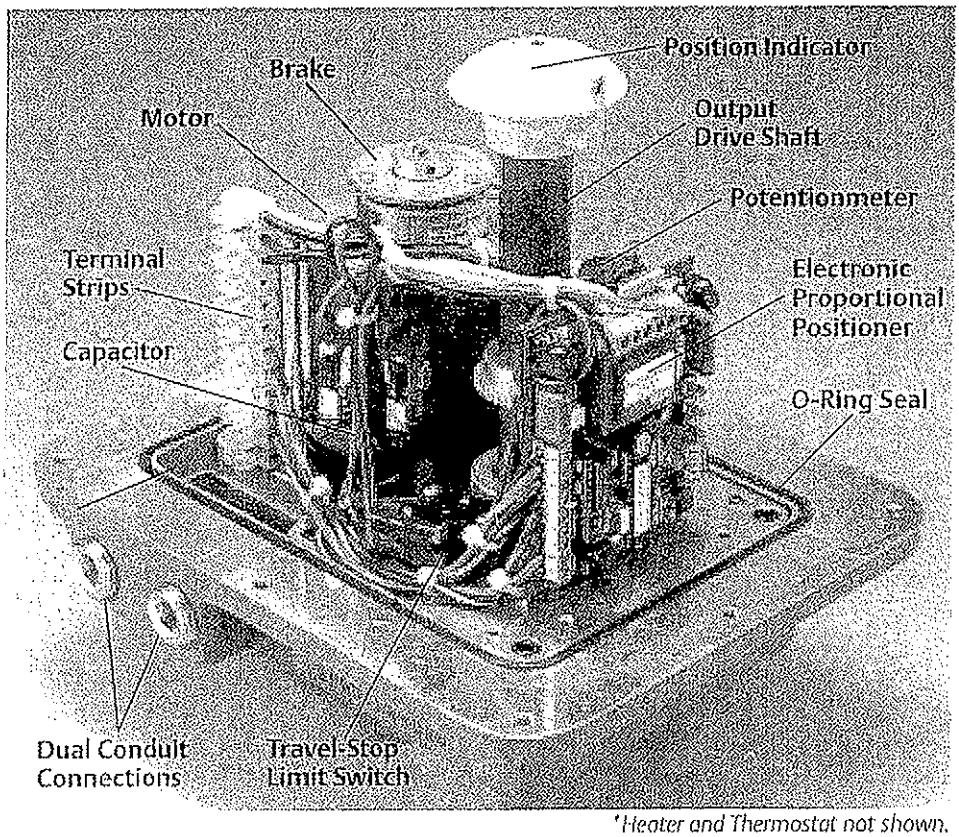

*Heater and Thermostat not shown.

MODEL EM-500 SERIES									
TORQUE		SPEED 90°	MODEL	LOCKED ROTOR AMP				MOTOR DUTY CYCLE @ 75°F	
IN/IB	NM			115VAC	230VAC	12VDC	24VDC	AC	DC
350	39	5 SEC	500-05	0.69	0.36	4.3	5.0	100%	100%
700	79	10 SEC	500-10	0.69	0.36	4.3	5.0	100%	100%
1000	113	15 SEC	500-15	0.69	0.36	4.3	5.0	100%	100%
1600	181	30 SEC	500-30	0.35	0.45	4.3	5.0	100%	100%
325	36	2 SEC	510-02	1.57	0.80	4.3	8.5	100%	100%
600	68	5 SEC	510-05	1.57	0.80	4.3	8.5	100%	100%
1000	113	7 SEC	510-07	1.57	0.80	4.3	8.5	100%	100%
180	20	5 SEC	520-05	0.57	0.29	1.2	2.5	30%	100%
450	51	10 SEC	520-10	0.57	0.29	1.2	2.5	30%	100%
600	68	15 SEC	520-15	0.57	0.29	1.2	2.5	30%	100%
1000	113	30 SEC	520-30	0.57	0.29	1.2	2.5	30%	100%

Bettis Electric Mansfield, OH U.S.A. T 419-529-4296 Website: www.EmersonProcess.com

© 2002 Emerson. All rights reserved. 5M/01-02

Assembly Layout Drawings

MODEL EM-500 EM-510 EM-520

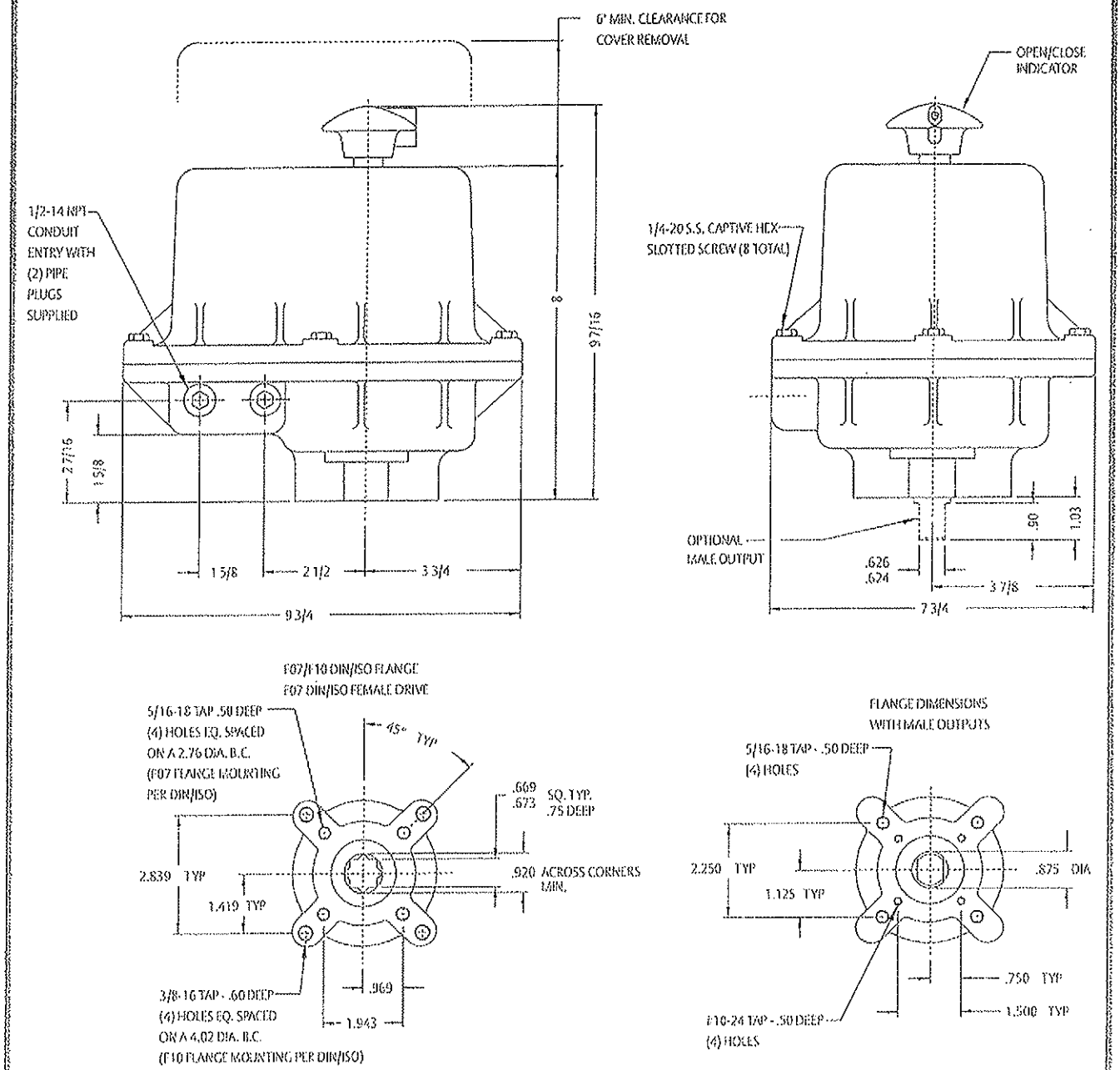

Bettis Electric
2500 Park Avenue West
Mansfield, OH 44906 U.S.A.
T 419-529-4296
F 419-529-4484
Website: www.EmersonProcess.com
E-Mail: Info.Bettis@EmersonProcess.com

Bettis USA
P.O. Box 508
Waller, TX 77484 U.S.A.
T 281-463-5100
F 281-463-5103
Website: www.EmersonProcess.com
E-mail: Info.Bettis@EmersonProcess.com

Bettis UK Ltd.
3 Furze Court
114 Wickham Rd.
Fareham, Hampshire PO 16 7SH
T 44-1329-848-900
F 44-1329-848-901

Bettis Canada Ltd.
4112-91 A Street
Edmonton, Alberta T6E 5V2
Canada
T 780-450-3600
F 780-450-1400

Bettis France:
30/36 Allee du Plateau
93250 Villemomble
France
T 331-48-122610
F 331-48-122619

Bettis Int'l Sales Office:

Calgary, Canada
Rheinberg, Germany
New Bombay, India
Singapore

Important: Due to Emerson's continuing commitment to engineered product advancement, data presented herein is subject to change.

Certified dimensional drawings and wiring diagrams are available on request. Consult factory with model designation and serial number.

Bettis Bulletin # 10.10 Rev: 02/02

©: 2002 Emerson. All rights reserved. 5M/02/02

BETTIS

EMERSON.
Process Management

Resilient Seated Butterfly Valves: 2"-24"

General Service Applications, Wafer & Lug Bodies

400 SERIES 422

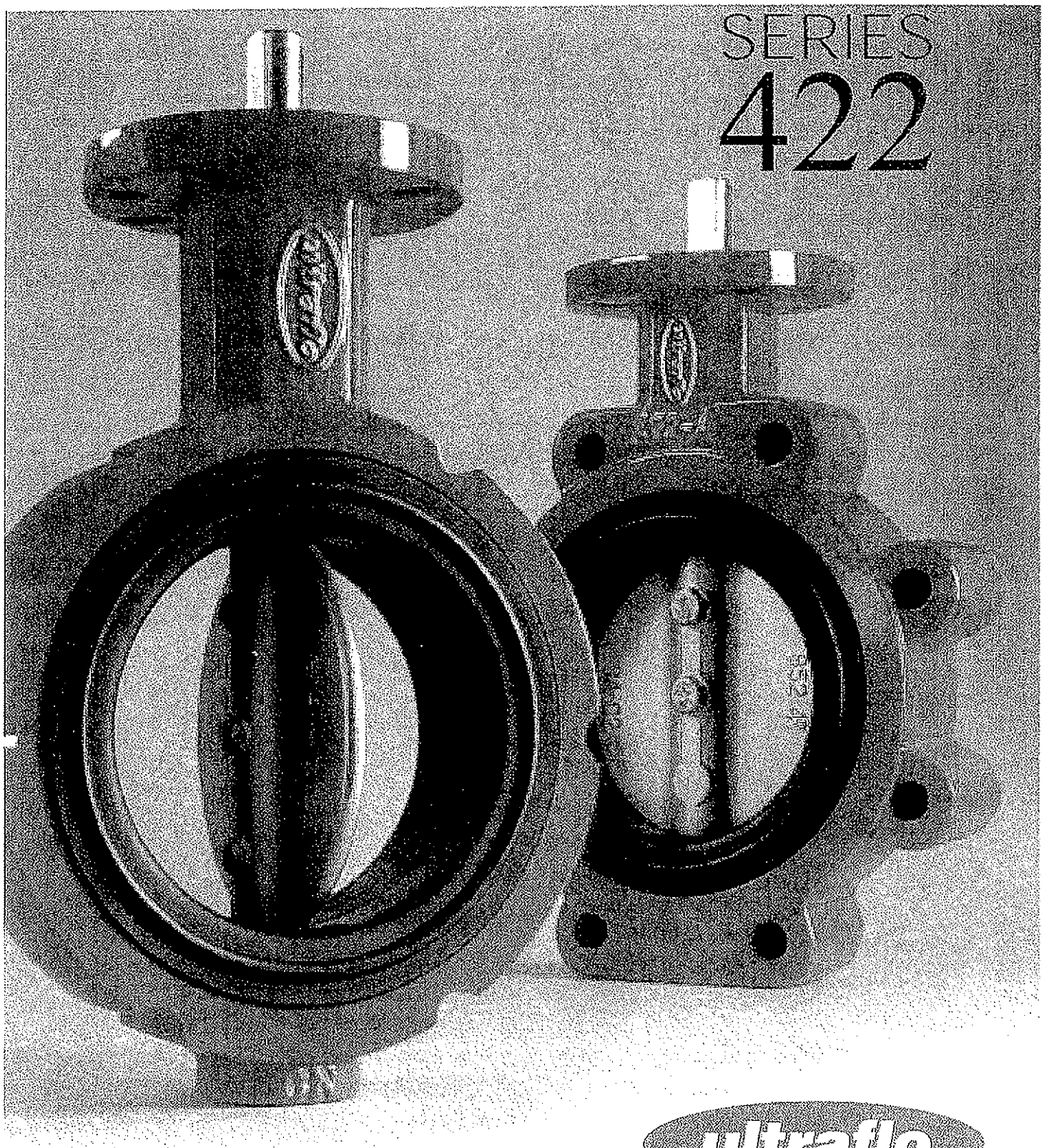

ultraflo®

400/422 SERIES

Ultraflo proudly offers the 400/422 Series general service butterfly valve. This economical, resilient seat valve is available in a wide variety of materials and provides a bi-directional pressure rating of ***150 psi***. Precision machined to close tolerances and constructed of high quality materials, the 400/422 Series delivers long service life, ease of operation and maintenance, and reduced cost.

Valve sizes are from ***2"– 24"***.

400 valves are ***Wafer*** style bodies offered in ***Cast Iron*** and ***Aluminum*** for sizes 2"–12". 14"– 24" 400 Series bodies are available in ***Nodular Iron*** only. 422 valves are ***Lug*** style bodies offered in ***Nodular Iron***.

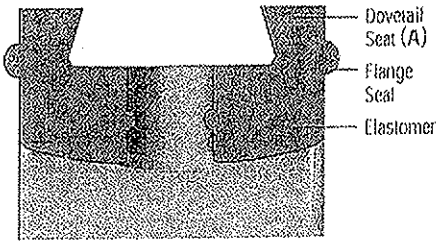

Elastomer seat. Section view at stem hole.

Ultraflo's resilient ***Seat*** (A) is the heart of all 400/422 Series valves. This seat offers lower torque and provides complete isolation of the line media from the valve body. The seat incorporates a dovetail retention system ensuring positive alignment and ease of assembly. All 400 Series seats include a flange seal molded into the seat face providing a positive seal with all popular flanges. Valves installed in dead end service (downstream flange removed) are derated to 75 psi for 2"–12" valves, 50 psi for 14"– 24" valves.

Features ***Primary and Secondary Seals*** (B) The primary seal is formed by an interference fit between the disc hub and the seat flat. The secondary seal is an interference fit between the stem and seat stem hole. These seals prevent line media from coming into contact with other valve components. Ultraflo's ***Disc*** (C) edge is CNC machined and hand polished to produce bubble tight shut off, minimum torque and longer seat life. Discs are available in a variety of materials and custom coatings. The ***Stem*** (D) is constructed of 17-4 ph Stainless Steel for high strength and includes industry standard connections for actuator mounting. The ***Upper Stem Bushing*** (E) absorbs operator side thrusts, provides precision alignment to ensure less wear and lowers operating torque. The ***Lower Stem Bushing*** (F) eliminates gaulding and frozen stems. Both upper and lower bushings are heavy duty non-corrosive thermoplastic polymer. A ***Stem Packing*** (G) prevents external contaminants from entering the stem bore. The one-piece ***Body*** (H) is offered in wafer or lug style. All 400/422 Series valve bodies are designed to fit between ASME/ANSI 125 or 150 lb. flanges. ***Body Recesses*** (I) accommodate lightweight flanges. All sizes of Cast Iron, Nodular Iron and Aluminum bodies have a CNC machined ***Top Plate*** (J) with standardized drilling for total actuator and operator interchangeability. A handle notch plate is supplied with the manual handle kit.

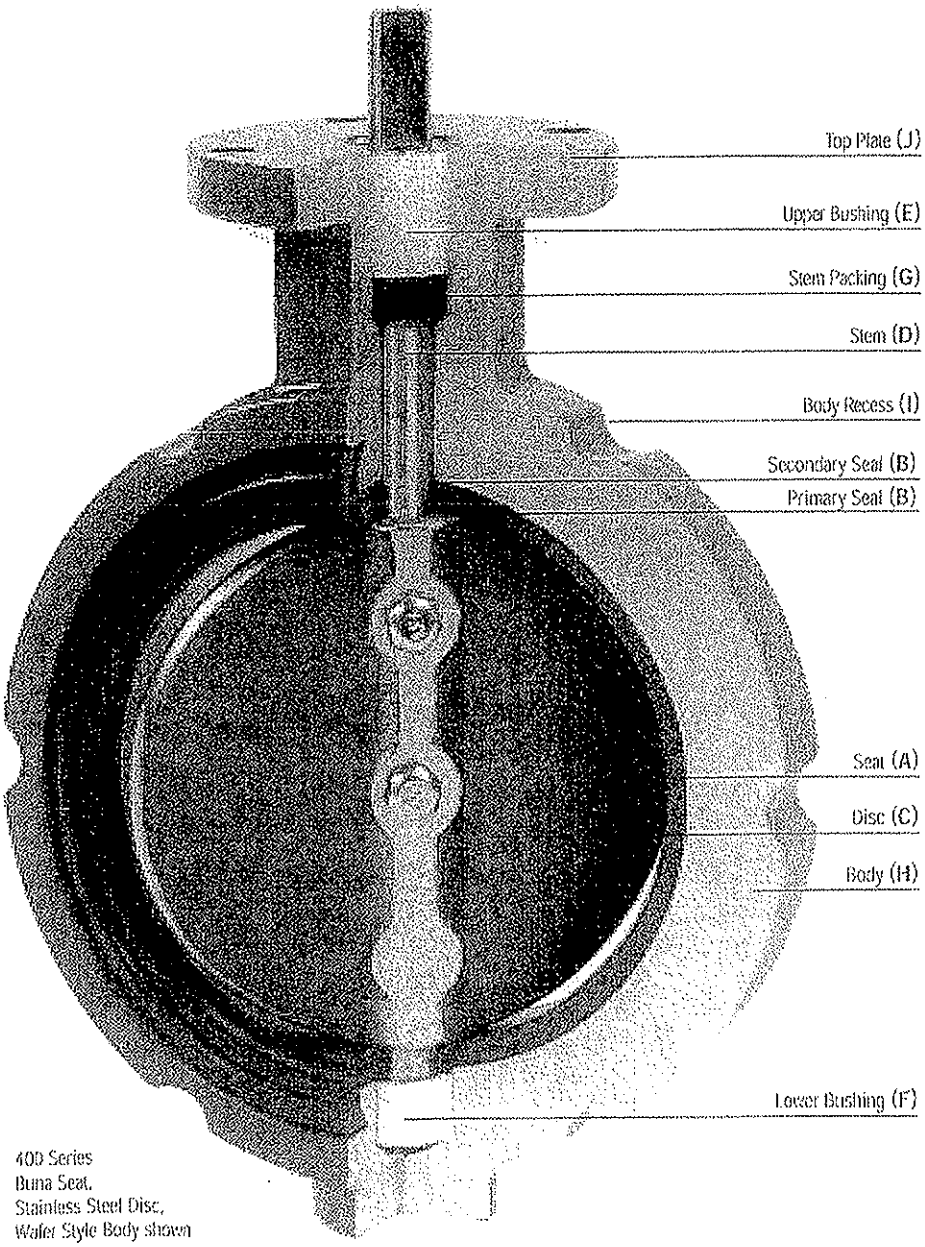

400 Series
Buna Seat,
Stainless Steel Disc,
Wafer Style Body shown

400/422 SERIES

Direct Operator Mounting

Ultraflo has designed the 400/422 Series operator mounting Top Flange to ISO 5211 specifications for direct mounting of manual operators and actuators. Designed to recognized industry standards, the Double D stem connection provides a secure connection with most actuators eliminating the need for brackets.

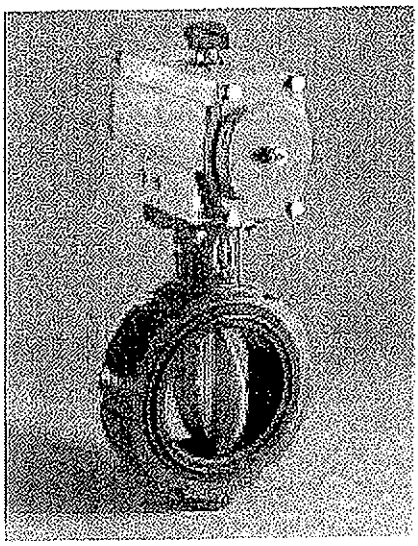

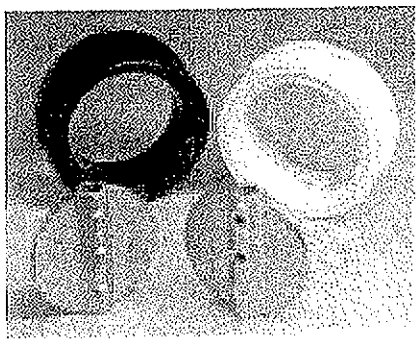

Discs are offered in Investment Cast 316 Stainless Steel, Nodular Iron, Nylon Coated Nodular Iron, ENP/Nodular Iron, Aluminum Bronze and a variety of custom coatings. Standard Seats are EPDM, Nitrile, Buna and FKM. Nitrile and EPDM are available in FDA approved white.

All Ultraflo valves are tested to 110% of pressure rating for bubble tight shut off before shipment.

All 400/422 Series valves are designed to meet MSS SP67 Dimensional Standards.

Components

Item	Description	Qty.
1	Body	1
2	Seat	1
3	Disc	1
4	Stem	1
5	Upper Bushing	1
6	Stem Packing	1
7	Lower Bushing	1
8	O-Ring	2*
9	Disc Screw	2*

*3 on 12" and larger valves. 24" disc to stem fasteners are hex nut retained taper pins with O-ring sealers.

Materials of Construction

Bodies: Cast Iron and Aluminum bodies are available in wafer style. Nodular Iron bodies are available in lug style.

Seats: EPDM, Nitrile, Buna, FKM. Nitrile and EPDM seats are available in FDA approved food grade white.

Disc: Investment Cast 316 Stainless Steel, Nodular Iron, Nylon Coated Nodular Iron, ENP/Nodular Iron and Aluminum Bronze. Custom disc coatings are also available.

Stem: 17-4 ph Stainless Steel and 316 Stainless Steel

Upper and Lower Bushings: Thermoplastic Polymer

Stem Packing: Buna-N

O-Rings: Buna-N

Disc Screws: 316 Stainless Steel

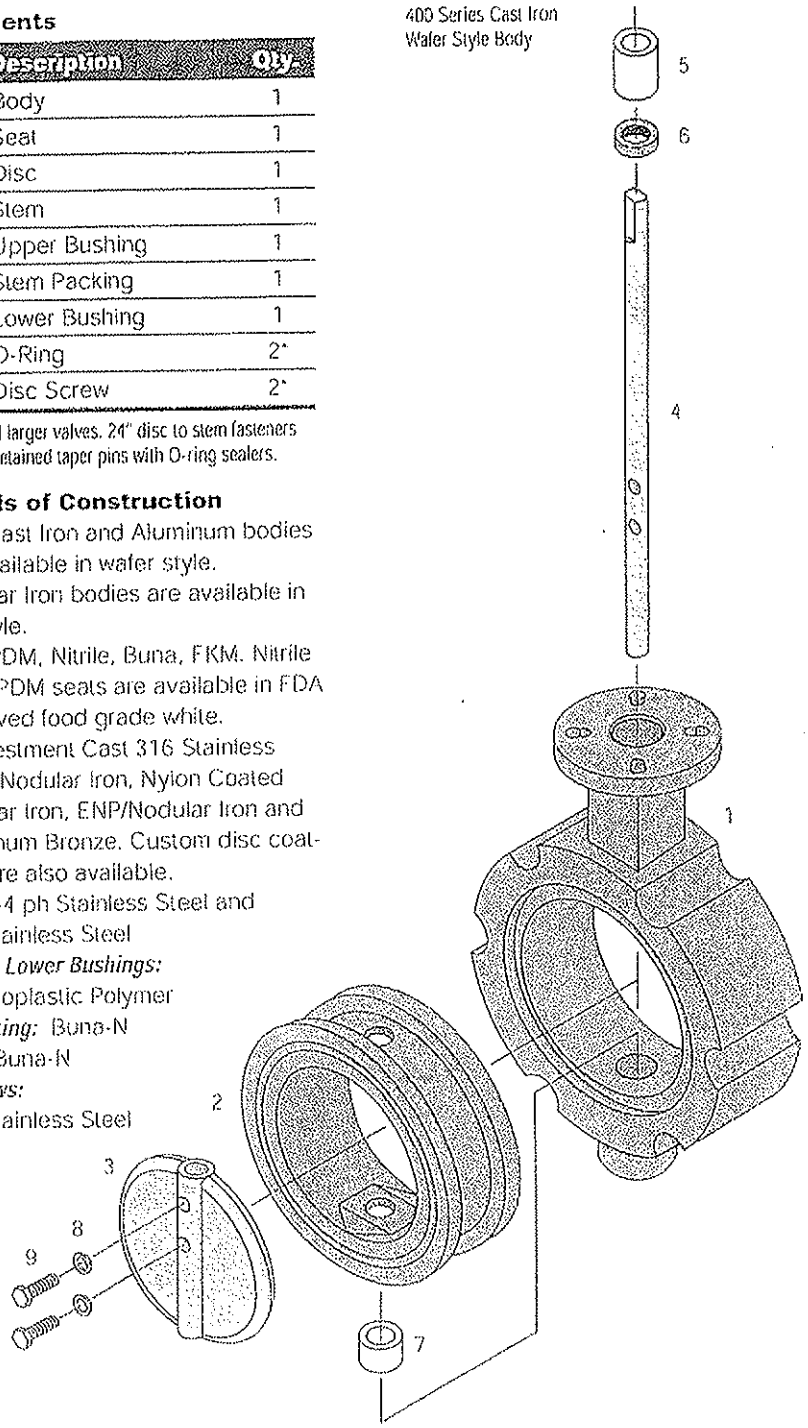

Temperature Range of Seats

Type	Minimum	Maximum
EPDM	-40°F	+250°F
Buna	0°F	+212°F
Nitrile	-20°F	+275°F
FKM	0°F	+400°F

Actuators & Accessories

Ultraflo offers a wide range of automation products including handles, gear operators, rack and pinion pneumatic actuators, pneumatic cylinder and wrench arm assemblies, electric actuators, pneumatic and electro-pneumatic positioners, solenoids, valve position indicators, proximity and limit switches.

400/422 SERIES

Dimensions

Valve Size Ins	Valve Size mm	A	B	C	D	E	F	G	H	Q	R	S	T	U	Lug Data BC	Lug Data Holes	Lug Data Tap
2	50	4.00	.375	.563	1.250	4.063	4.125	2.125	1.625	1.531	3.250	.438	2.760	.375	4.750	4	.625-11
2 1/2	65	4.00	.375	.563	1.250	4.625	4.875	2.50	1.750	1.969	3.250	.438	2.760	.375	4.750	4	.625-11
3	75	4.00	.375	.563	1.250	5.00	5.375	3.125	1.750	2.689	3.250	.438	2.760	.375	6.00	4	.625-11
4	100	4.00	.438	.625	1.250	6.00	6.875	4.125	2.00	3.719	3.250	.438	2.760	.375	7.50	8	.625-11
5	125	4.00	.438	.625	1.250	6.00	7.750	5.188	2.125	4.813	3.250	.438	2.760	.375	8.50	8	.750-10
* 6	150	4.00	.438	.625	1.250	6.625	8.750	6.125	2.125	5.813	3.250	.438	2.760	.438	9.50	8	.750-10
8	200	6.00	.500	.750	1.250	8.313	11.00	8.125	2.50	7.813	5.00	.563	4.020	.438	11.750	8	.750-10
10	250	6.00	.625	.875	1.250	9.125	13.375	10.125	2.50	9.906	5.00	.563	4.020	.438	14.250	12	.875-9

Valve Size Ins	Valve Size mm	A	C	D	E	F	G	H	Q	Key Way	R	S	T	U	Lug Data BC	Lug Data Holes	Lug Data Tap
12	300	6.00	1.125	2.00	10.645	16.125	12.094	3.00	11.844	.25 x .25	5.00	.563	4.020	.438	17.00	12	.875-9
14	350	6.00	1.375	3.00	12.00	17.750	13.250	3.00	13.125	.313 x .313	5.00	.563	—	—	18.75	12	1.0-8
16	400	6.00	1.375	3.00	12.953	20.250	15.250	4.00	15.00	.313 x .313	5.00	.563	—	—	21.25	16	1.0-8
18	450	8.00	1.875	4.250	14.50	21.625	17.250	4.25	16.875	.50 x .375	6.50	.813	—	—	22.75	16	1.125-7
20	500	8.00	1.875	4.250	15.875	23.875	19.250	5.00	18.750	.50 x .375	6.50	.813	—	—	25.00	20	1.125-7
24	600	8.00	1.875	4.250	19.50	28.250	23.250	5.94	12.625	.50 x .375	6.50	.813	—	—	29.50	20	1.25-7

All 400/422 Series valves are designed to meet MSS SP67 dimensional standards.

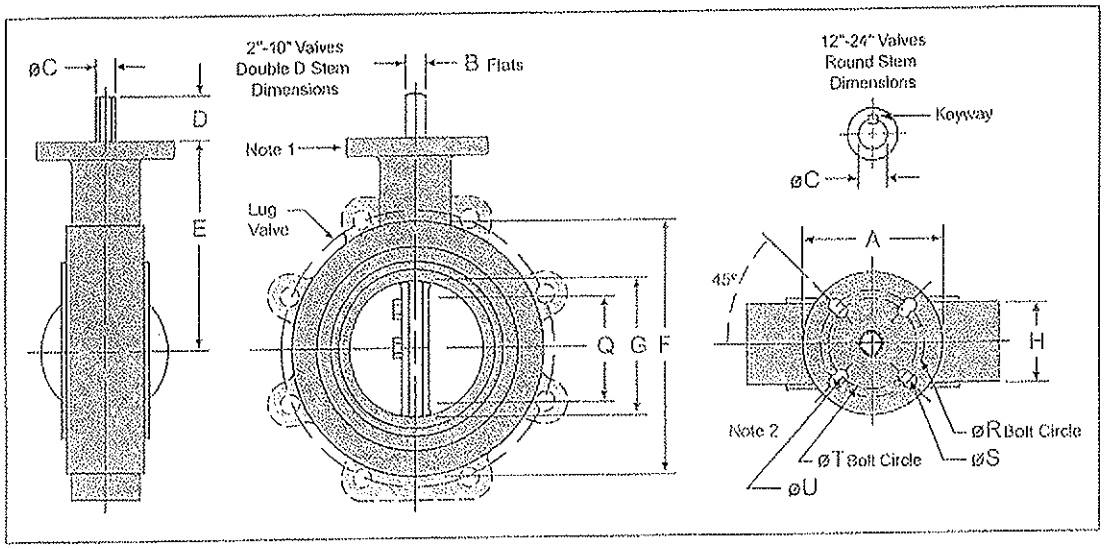

Notes:

1. Cast Iron, Nodular Iron & Aluminum Valve bodies have standard Top Flanges, notch plates are supplied with handle.
2. Bolt Circle T and Hole Diameter U meet ISO 5211 standards for Top Flange Drilling:
   2"-6" = F7
   8"-12" = F12
   Not applicable to all sizes Aluminum bodies, or 14"-24" Cast or Nodular Iron bodies.

Flange Requirements

The valve O.D. and flange bolt circle must share a common center line. The valve is designed to be placed between ASME/ANSI 125 or 150 lb. flanges.

The data represented in this brochure is for general information only. Manufacturer is not responsible for acceptability of these products in relation to system requirements. Consult your Ultraflo representative for specific performance data and proper materials selection for your particular application.

© 2005 Ultraflo Corporation. All rights reserved. 400/422S 3/05

Ultraflo Corporation
A Subsidiary of Bray International, Inc.
8 Trautman Industrial Drive
Ste. Genevieve MO 63670
800.950.1762 Fax 573.883.8882
www.ultraflovalve.com

DURHAM

Submittal Drawings

October 2008

LIST OF DRAWINGS

DRAWING TITLE	SHEET NO.
COVER PAGE	1T-074-1-01
MECHANICAL SYMBOLS/ABBREVIATIONS	1M-074-1-01
PROCESS AND INSTRUMENTATION DRAWING	3G-074-1-01
PARTS LIST	3G-074-1-02
PRELIMINARY SKID LAYOUT	6L-074-01
CONTROL PANEL LAYOUT	4P-074-1-01
ONE LINE DIAGRAM	4L-074-1-01
CONTROL PANEL INTERIOR	4P-074-1-02
480V LOADS	4E-074-1-02
CONTROL PANEL	4E-074-1-11 THRU 14
CONTROL PANEL	4E-074-1-21 THRU 22
CONTROL PANEL	4E-074-1-31 THRU 32
CONTROL PANEL	4E-074-1-41
CONTROL PANEL	4E-074-1-51 THRU 53
CONTROL PANEL	4E-074-1-61
CONTROL PANEL	4E-074-1-71 THRU 72
CONTROL PANEL	4E-074-1-81

Unison Solutions, Inc.
5451 Chavenelle Road
Dubuque, IA 52002
Ph: 563-585-0967
Fax: 563-585-0970
www.unisonsolutions.com

UNISON
SOLUTIONS

MECHANICAL ABBREVIATIONS

THESE ABBREVIATIONS COMPRISE A STANDARD LIST; NOT ALL ABBREVIATIONS MAY APPEAR ON THIS PROJECT.

AC	AIR CONDITIONER
ACFM	ACTUAL CUBIC FEET PER MINUTE
AHU	AIR HANDLING UNIT
ALT	ALTERNATE
APPROX	APPROXIMATELY
AS	AIR SEPARATOR
BD	BACK DRAFT DAMPER
BE	FLAME SCANNER
BHC	BOLT HOLE CIRCLE
BI	BLACK IRON
BLR	BLOWER
BM	BENCH MARK
BO	BLOW OFF
BRN	BURNER
BTU	BRITISH THERMAL UNIT
BTUH	BRITISH THERMAL UNIT PER HOUR
BUH	BLAST UNIT HEATER
C	DEGREES CELCIUS
CAB	CABINET
CFM	CUBIC FEET PER MINUTE
CHL	CHILLER
CI	CAST IRON
CIRC	CIRCULATOR
CMP	COMPRESSOR
CO	CLEAN OUT
COND	CONDENSATE
CONN	CONNECTION
CONT	CONTINUOUS
CP	CONTROL PANEL
CTRS	CENTERS
DB	DRY BULB TEMPERATURE
DET	DETAIL
DIA	DIAMETER
DIFF	DIFFERENTIAL
DIM	DIMENSION
DISCH	DISCHARGE
DP	DIFFERENTIAL PRESSURE
E	ELEMENT/PROBE
EL	ELEVATION
ELEC	ELECTRICAL
EPSW	ELECTRIC PNEUMATIC SWITCH
EQUIP	EQUIPMENT
EXH	EXHAUST
EXIST	EXISTING
EXP	EXPANSION
EXT	EXTERIOR/EXTERNAL
F	DEGREES FAHRENHEIT
FD	FLOAT OPERATED DRAIN
FI	FLOW INDICATOR
FIT	FLOW INDICATING TRANSMITTER
FLT	FILTER
FO	FLOW ORIFICE
FPM	FEET PER MINUTE
FPS	FEET PER SECOND
FT	FEET
FT	FLOW TRANSMITTER
FX	FLEXIBLE JOINT
FS	FLOW SWITCH
G	GAUGE
GALV	GALVANIZED
GEN	GENERATOR
GPH	GALLONS PER HOUR
GPM	GALLONS PER MINUTE
HD	HEAD
HOR	HORIZONTAL
HP	HIGH PRESSURE
HRU	HEAT RECOVERY UNIT
HX	HEAT EXCHANGER
I	INDICATOR/GAUGE
ID	INSIDE DIAMETER
IGN	IGNITOR
INSUL	INSULATION
KO	KNOCK OUT
LI	LEVEL INDICATOR
LS	LEVEL SWITCH
LVR	LOUVER
LZ	AUTOMATIC VENT
M	MOTOR
MBH	THOUSAND BTU's PER HOUR
MECH	MECHANICAL
MMBH	MILLION BTU's PER HOUR
MOD	MOTOR OPERATED DAMPER
MTD	MOUNTED
NC	NORMALLY CLOSED
NO	NORMALLY OPEN
OC	ON CENTER
OD	OUTSIDE DIAMETER
OT	OXYGEN TRANSMITTER
PCV	PRESSURE CONTROL VALVE
PDI	DIFFERENTIAL PRESSURE INDICATOR
PDS	DIFFERENTIAL PRESSURE SWITCH
PDT	DIFFERENTIAL PRESSURE TRANSMITTER
PDIT	DIFFERENTIAL PRESSURE INDICATING TRANSMITTER
PMP	PUMP
PPMV	PARTS PER MILLION VOLUME
PI	PRESSURE INDICATOR
PIT	PRESSURE INDICATING TRANSMITTER
PNEU	PNEUMATIC
PRV	PRESSURE REGULATING VALVE
PS	PRESSURE SWITCH
PSIA	POUNDS PER SQ. INCH ABSOLUTE
PSID	POUNDS PER SQ. INCH DIFFERENTIAL
PSIG	POUNDS PER SQ. INCH GAGE
PSN	VACUUM SWITCH
PSV	PRESSURE SAFETY / RELIEF VALVE
PT	PRESSURE TRANSMITTER
PTA	PRESSURE / VACUUM TRANSMITTER
PTN	VACUUM TRANSMITTER
QC	QUICK COUPLING
RAD	RADIATOR
REF	REFRIGERANT
REQ	REQUIRED
REV	REVISION
RH	RELATIVE HUMIDITY
RPM	REVOLUTIONS PER MINUTE
S	SWITCH
SCFM	STANDARD CUBIC FEET PER MINUTE
SCH	SCHEDULE
SECT	SECTION
S.P.	SET POINT
SPEC	SPECIFICATION
SS	STAINLESS STEEL
STD	STANDARD
STL	STEEL
STR	STRAINER
STRUC	STRUCTURAL
T	TRANSMITTER
TC	TEMPERATURE CONTROLLER
TCV	THERMOSTATIC VALVE
TE	TEMPERATURE ELEMENT
TI	TEMPERATURE INDICATOR
TIT	TEMPERATURE INDICATING TRANSMITTER
TK	TANK
TS	TEMPERATURE SWITCH
TSE	FLAME TRAP/ARRESTOR
UL	UNDERWRITERS LABORATORIES, INC
V	VENT
VA	ACTUATED VALVE
VAC	VACUUM
VB	BALL VALVE
VC	CHECK VALVE
VERT	VERTICAL
VG	GLOBE VALVE
VI	INSTRUMENTATION VALVE
VM	MODULATING VALVE
VN	NEEDLE VALVE
VOL	VOLUME
VP	PLUG VALVE
VR	ROTARY VALVE
VS	SOLENOID VALVE
VY	BUTTERFLY VALVE
VZ	MANIFOLD VALVE
W/	WITH
W/O	WITHOUT
WB	WET BULB TEMPERATURE
WC	WATER COLUMN
ZS	LIMIT SWITCH

MECHANICAL SYMBOLS

THESE SYMBOLS COMPRISE A STANDARD LIST; NOT ALL SYMBOLS MAY APPEAR ON THIS PROJECT

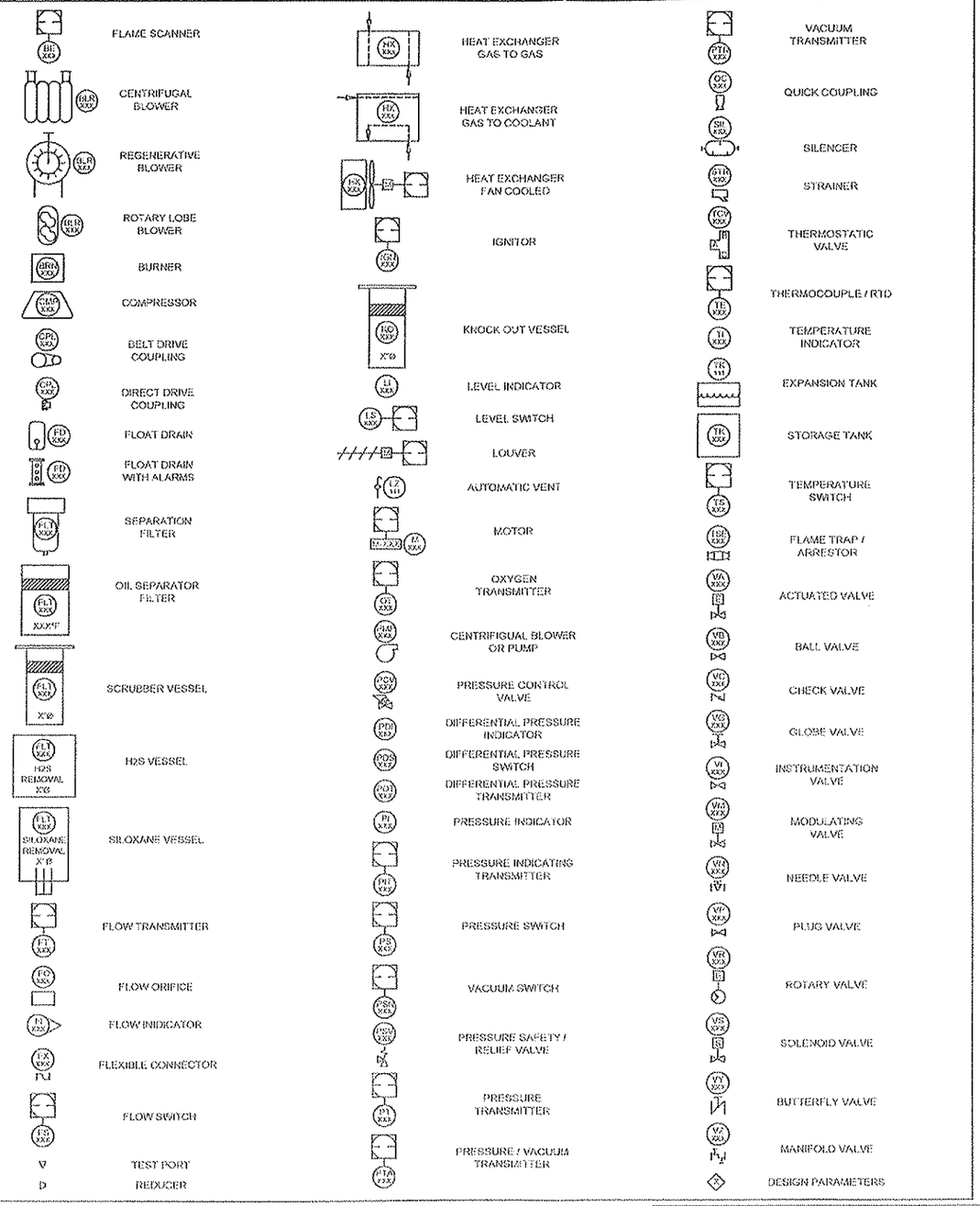

UNISON SOLUTIONS

Unison Solutions Inc.
5451 Chavenelle Road
Dubuque, IA 52002
PHONE: 563-585-0967 FAX: 563-585-0970

PROJECT	074 - DURHAM		
DESCRIPTION	MECHANICAL ABBREVIATIONS / SYMBOLS		
DRAWN BY	NH	DATE	10-16-08
DWG. NO.	1M-074-01		

ELECTRICAL ABBREVIATIONS

THESE ABBREVIATIONS COMPRISE A STANDARD LIST; NOT ALL ABBREVIATIONS MAY APPEAR ON THIS PROJECT

AC	AIR CONDITIONER
BBU	BATTERY BACK UP
BIN	DC BUS INDICATOR
BK	BLACK
BU	BLUE
BR	BROWN
BRK	DYNAMIC BRAKE
CAD	COMMUNICATION ADAPTER
CB	CIRCUIT BREAKER
CBL	CABLE
CC	CUSTOMER CONTACT
CD	CUSTOMER DEVICE
CHK	CHOKE
CHT	CHART RECORDER
CM	CABLE MODEM
CR	CONTROL RELAY
CT	SHORTING BLOCK
CTR	CONTROLLER
CTS	CURRENT SWITCH
CVR	MEDIA CONVERTOR
DCP	DE-CONTRACTOR PLUG
DIO	DIODE
DIP	DATA INTERFACE PORT
DIS	DISPLAY SCREEN
DPR	DEFINITE PURPOSE RELAY
DPS	DC POWER SUPPLY
DS	DOOR SWITCH
DSW	DISCONNECT SWITCH (NON FUSED)
ESW	ETHERNET SWITCH
FAN	FAN
FB	FUSE BLOCK
FDS	FUSED DISCONNECT SWITCH
FL	FLUORESCENT LIGHT
GND	GROUND
GR	GREEN
HM	HOUR METER
HRN	ALARM HORN
HTC	HEAT TRACE CONTROLLER
HTR	HEATER
HX	PANEL HEAT EXCHANGER
HX	AIR EXCHANGER
IGN	IGNITOR
IL	INCANDESCENT LIGHT
JBX	JUNCTION BOX
JMP	JUMPER
LDP	LOW VOLTAGE DIST. PANEL
LRE	LINE REACTOR
LSS	LINE SHARING DEVICE
LT	INDICATOR LIGHT
MCS	MOTOR CONTROLLER (SOFT START)
MOD	PLC MODULE
MS	MOTOR STARTER
MTS	MANUAL TRANSFER SWITCH
NAD	NULL MODEM ADAPTER
OL	OVER LOAD
OR	ORANGE
PB	PUSH BUTTON
PHM	PHASE MONITOR
PL	PURPLE
PLC	PROGRAMMABLE LOGIC CONTROLLER
PM	PHONE MODEM
POT	POTENTIOMETER
RD	RED
RDA	RADIO ANTENNA
RDT	RADIO TRANSMITTER
REC	RECEPTACLE
RES	RESISTOR
RTR	ROUTER
SS	SURGE SUPPRESSOR
SW	SWITCH
TS	THERMOSTAT
TX	TRANSFORMER
VFD	VARIABLE FREQUENCY DRIVE
VIM	POWER MONITOR
YL	YELLOW
WT	WHITE

ELECTRICAL SYMBOLS

THESE SYMBOLS COMPRISE A STANDARD LIST; NOT ALL SYMBOLS MAY APPEAR ON THIS PROJECT

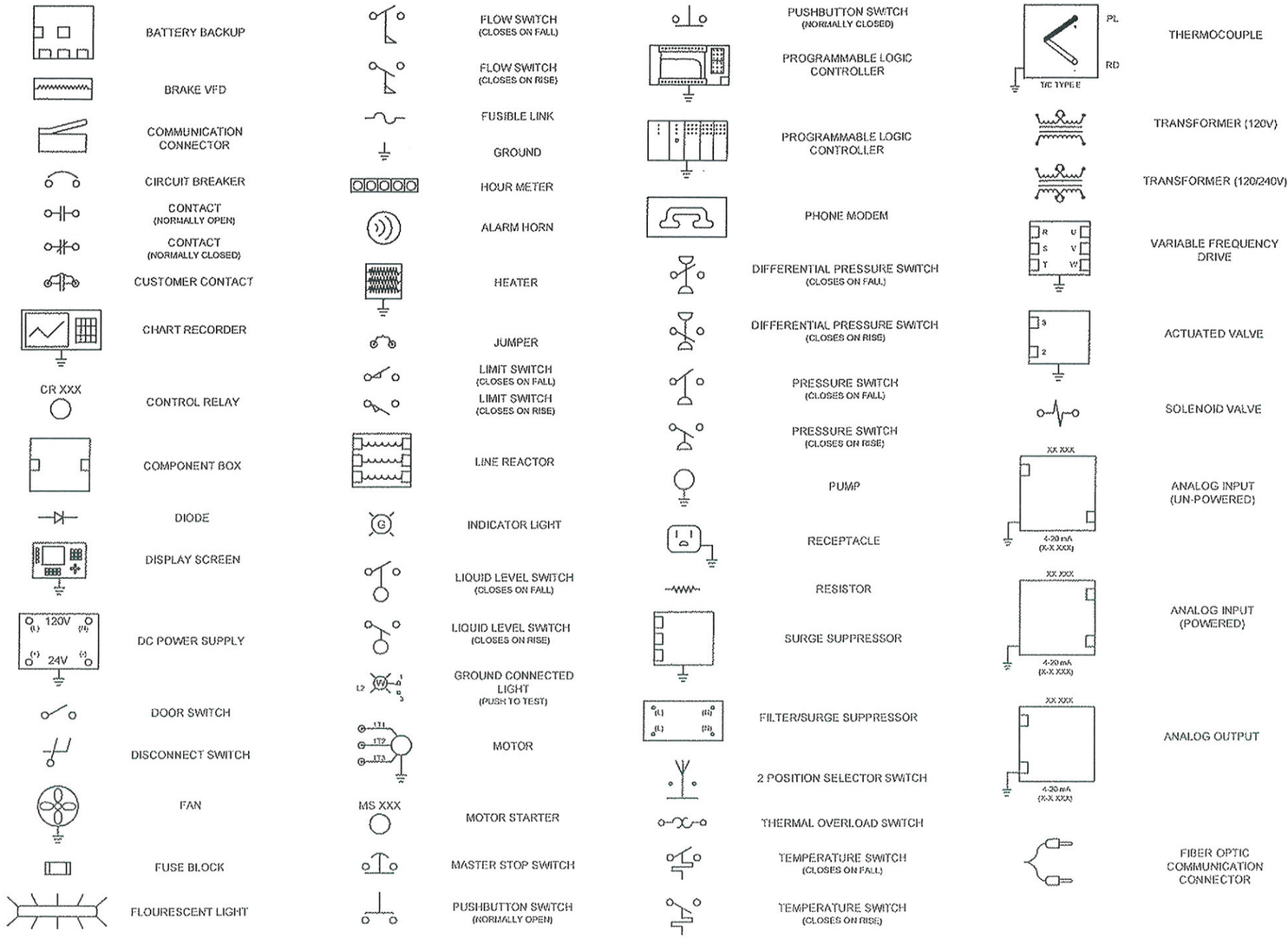

UNISON SOLUTIONS

Unison Solutions Inc.
5451 Chavenelle Road
Dubuque, IA 52002
PHONE: 563-585-0967 FAX: 563-585-0970

PROJECT	074 - DURHAM		
DESCRIPTION	ELECTRICAL ABBREVIATIONS/SYMBOLS		
DRAWN BY	NH	DATE	10-16-08
DWG. NO.	1E-074-01		

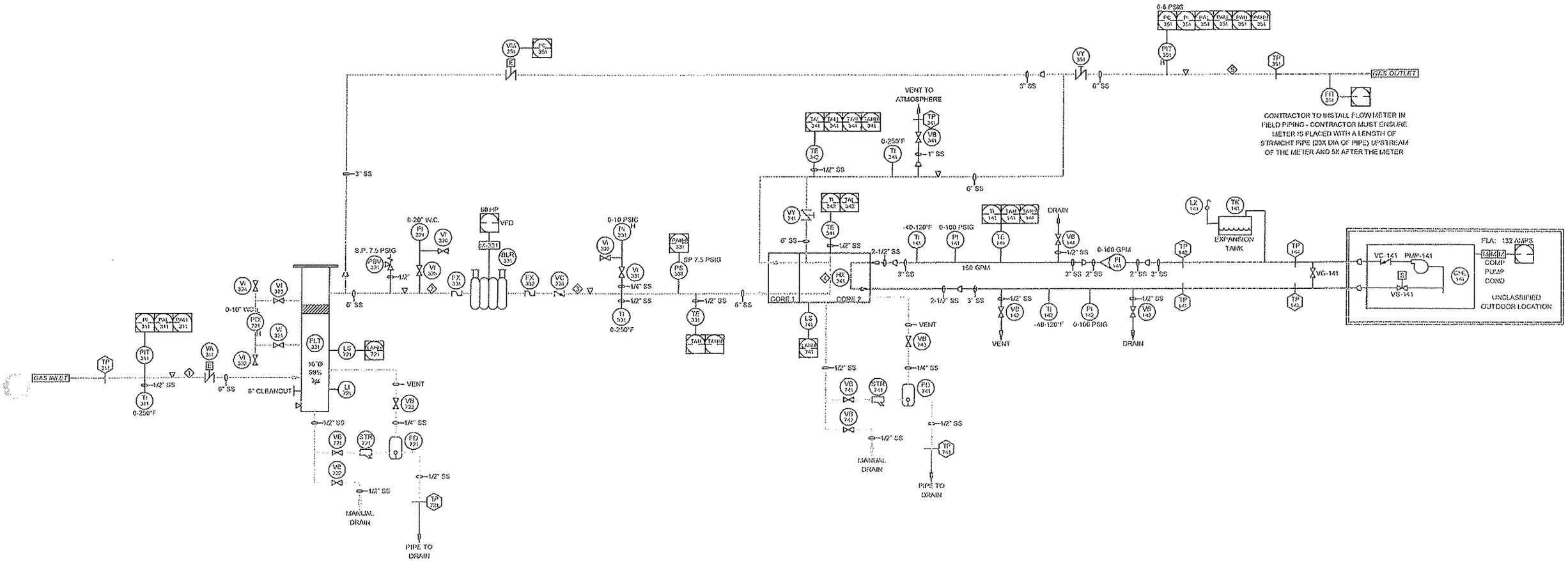

TIE POINT
TP XXX = TIE POINT
UNIQUE PART IDENTIFICATION
SYSTEM LOCATION DESIGNATION
FLUID DESIGNATION

UNISON SUPPLIED COMPONENTS	CUSTOMER/VENDOR SUPPLIED COMPONENTS
XX ### — COMPONENT ABBREVIATION	XX - ### — COMPONENT ABBREVIATION
UNIQUE PART IDENTIFICATION	UNIQUE PART IDENTIFICATION
SYSTEM LOCATION DESIGNATION	SYSTEM LOCATION DESIGNATION
FLUID DESIGNATION	FLUID DESIGNATION

LINE LEGEND		COLOR
UNISON SUPPLIED PIPING	———	VARIES
CUSTOMER SUPPLIED PIPING	- - - - - -	RED
FUTURE PIPING	· · · · · ·	GRAY
LOCATION DESIGNATOR	— — — — — —	BLACK
COMPONENT BOUNDARY	═══	BLACK

	REFERENCE DESIGNATOR FLUID LEGEND	COLOR
1XX	COOLANT/WATER	BLUE
2XX	OIL/LUBRICANTS	ORANGE
3XX	BIOGAS	GREEN
4XX	AIR	YELLOW
5XX	FOSSIL FUEL	PINK
6XX	COMBUSTION EXHAUST	PURPLE
7XX	CONDENSATE	LIGHT BLUE
8XX	OTHER	BROWN

	REFERENCE DESIGNATOR SYSTEM LOCATION LEGEND
X0X	H2S FILTRATION
X1X	PRE COOLING / SKID INLET
X2X	PRE FILTRATION
X3X	COMPRESSION
X4X	GAS DRYING
X5X	DISTRIBUTION/REGULATION
X6X	SILOXANE REMOVAL
X7X	HEAT RECOVERY 1
X8X	HEAT RECOVERY 2
X9X	BOILER

DESIGN PARAMETERS

LOCATION ◇	SCFM	ACFM	PSIG	PSIA	°T	R.H.
1	1,000	1,054	0.4	14.6	100°F	100%
2	1,000	1,070	0.3	14.6	100°F	100%
3	1,000	907	5.5	19.8	181°F	17%
4	1,000	718	5.1	19.4	40°F	100%
5	1,000	780	5.0	19.3	80°F	24%

UNISON SOLUTIONS

Unison Solutions Inc.
5451 Chavenelle Road
Dubuque, IA 52002
PHONE: 563-585-0967 FAX: 563-585-0970

PROJECT	074 - DURHAM		
DESCRIPTION	PROCESS & INSTRUMENTATION		
DRAWN BY	EDD	DATE	10-6-08
DWG. NO.	3G-074-1-01		

REF. DES.	MANUFACTURER	MODEL
BLR-331	HSI	6106
CHL-141	Advantage Engineerin	OACS-50D-MZC-2P
FD-721	Armstrong	180-LD, 1/2", 1/8" orifice
FD-741	Armstrong	180-LD, 1/2", 1/8" orifice
FI-141	Universal	MN-ISB160GM-16FWS150RF-32V1.0-A0WL-ST
FIT-141	Endress + Hauser	65I-40AA0AD1NABABA w/DK6ML-A1A
FLT-321	Unison Solutions	Dwg. 6V-074-01
FX-331	Twin City Hose	6"x12" Flex
FX-332	Twin City Hose	6"x12" Flex
HX-341	Xchanger, Inc.	TV-225 91522, HR-500 91523
LI-721	Thomas Products	5100 series 43677
LS-721	Dwyer	L6EPB-S-S-3-A-CSA
LS-741	Dwyer	L6EPB-S-S-3-A-CSA
LZ-141	Honeywell	PV-200
PDI-321	Dwyer	4010-LT
PI-141	PIC	301-L
PI-142	PIC	301-L
PI-321	Dwyer	4020-LT
PI-331	Dwyer	4210-LT
PIT-311	Endress + Hauser	PMC71-SBC1CBRAAAA
PIT-351	Endress + Hauser	PMC71-SBC1HBRAAAA
PS-331	Dwyer	H3A-2ST
PSV-321	Apollo	541-DCBZMX
STR-721	Keckley	SSB-7
STR-741	Keckley	SSB-7
TE-141	Reotemp	E1FM18E3ASG2.5
TE-331	Reotemp	E1FM18E3ASG4.0
TE-341	Reotemp	E1FM18E3ASG4.0
TE-342	Reotemp	E1FM18E3ASG4.0
TI-141	PIC	B3B2-AA
TI-142	PIC	B3B2-AA
TI-311	PIC	B3B2-II
TI-331	PIC	B3B2-II
TI-341	PIC	B3B2-II
TK-141	ITT Bell & Gossett	HFT-30
VA-311	Ultraflo	6" 392-822U540 w/RCS Sure 100-10-7
VB-141	Sharpe	50M76
VB-142	Sharpe	50M76
VB-143	Sharpe	50M76
VB-341	Sharpe	50M76
VB-721	Sharpe	50M76
VB-722	Sharpe	50M76
VB-723	Legend	T-710
VB-741	Sharpe	50M76
VB-742	Sharpe	50M76
VB-743	Legend	T-710
VC-331	CheckAll	F1PSSVT.500SS
VI-321	Legend	T-710
VI-322	Legend	T-710
VI-323	Legend	T-710
VI-324	Legend	T-710
VI-325	Legend	T-710
VI-326	Legend	T-710
VI-331	Legend	T-710
VI-332	Legend	T-710
VM-351	Ultraflo	3" 392-822F540 w/Bettis EM500-15-C7-02-100
VY-341	Ultraflo	6" 422824F540-1L
VY-351	Ultraflo	6" 422824F540-1L

UNISON SOLUTIONS

Unison Solutions Inc.
5451 Chavenelle Road
Dubuque, IA 52002
PHONE: 563-585-0967 FAX: 563-585-0970

PROJECT	074 - DURHAM		
DESCRIPTION	PARTS LIST		
DRAWN BY	EDD	DATE	10-16-08
DWG. NO.	3G-074-1-02		

PLAN VIEW

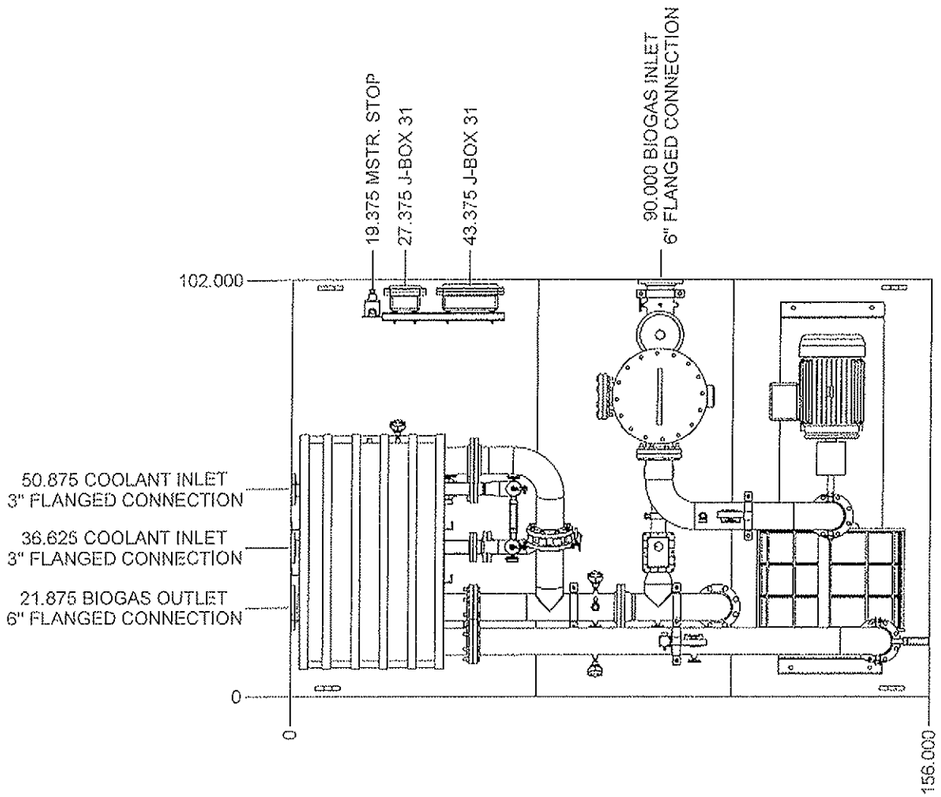

ELEVATION VIEW

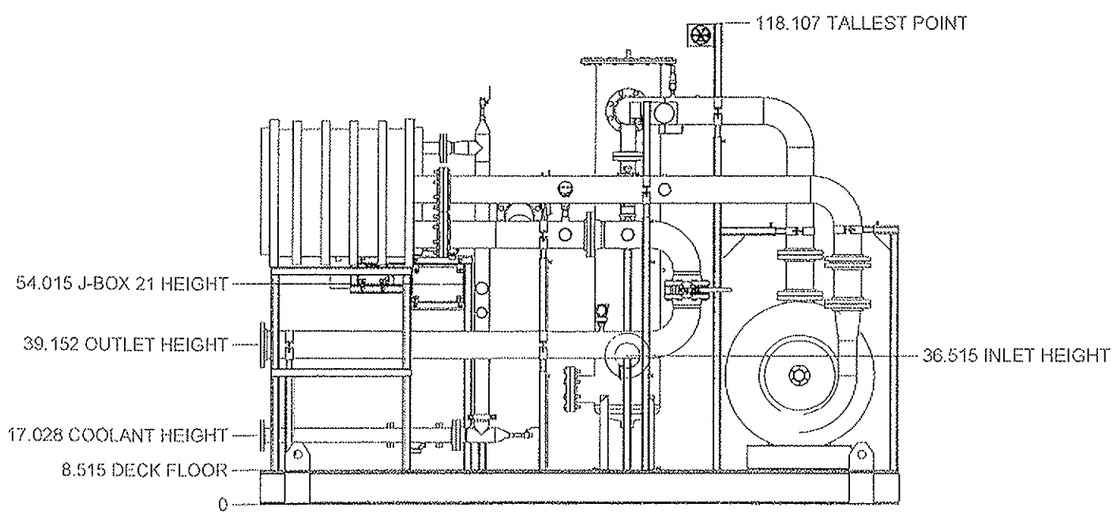

ISOMETRIC VIEW

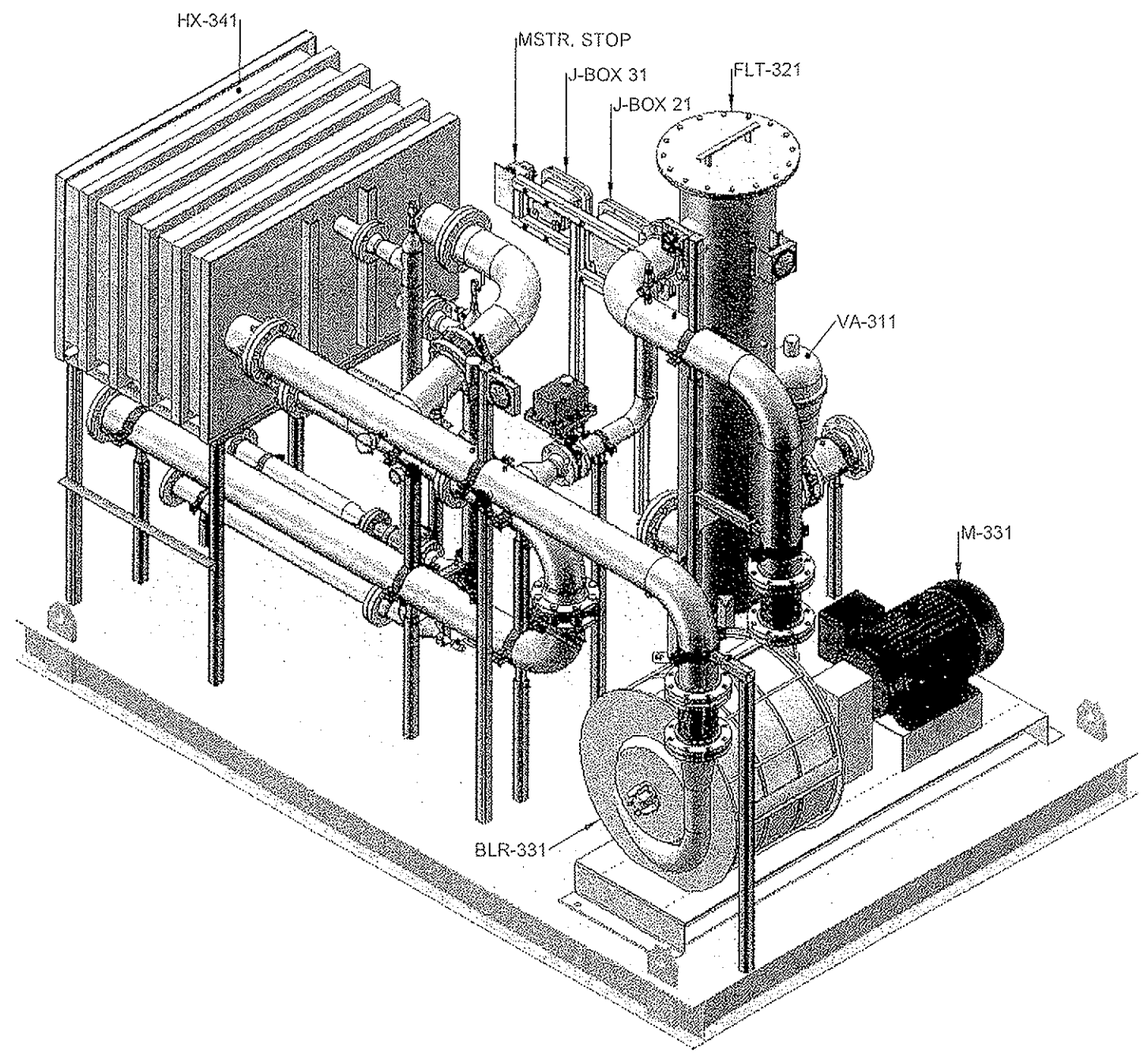

NOTES:

- PRELIMINARY CONCEPT SHOWN; DIMENSIONS ARE SUBJECT TO CHANGE.
- CONDENSATE PIPING NOT SHOWN.
- OUTLET PIPE HAS A STRAIGHT RUN OF 95 3/8".

UNISON SOLUTIONS

Unison Solutions Inc.
5451 Chavenelle Road
Dubuque, IA 52002
PHONE: 563-585-0987 FAX: 563-585-0970

PROJECT	074 - DURHAM		
DESCRIPTION	PRELIMINARY LAYOUT		
DRAWN BY	NH	DATE	10/16/2009
REVISION	-	DWG. NO.	6L-074-01

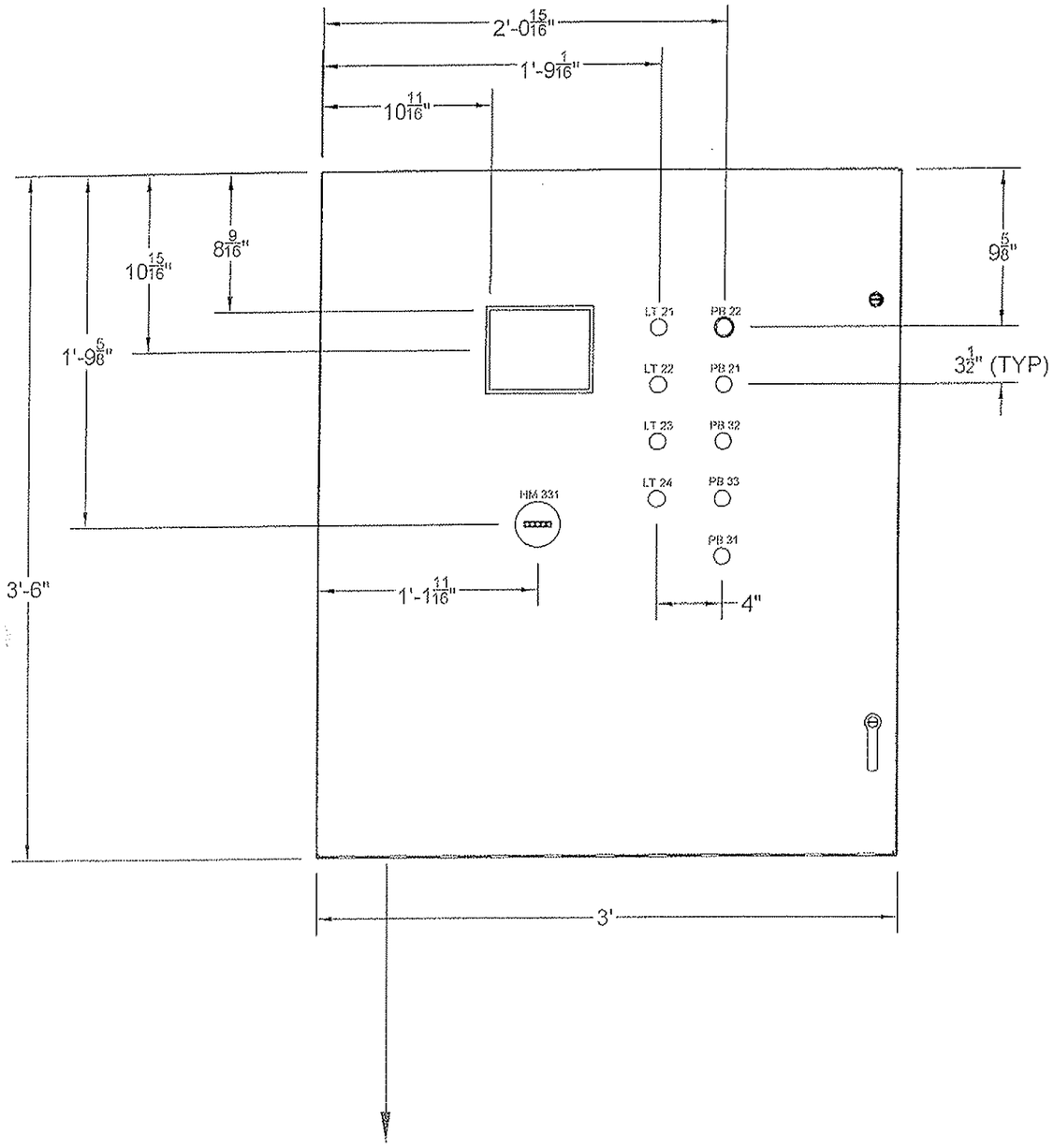

MOUNT 34" FROM THE GROUND

LT 21: "GROUND CONNECTED"
WHITE
(PUSH TO TEST)

LT 22: : "POWER ON"
GREEN
(PUSH TO TEST)

LT 23: "RUN"
GREEN
(PUSH TO TEST)

LT 24: "FAULT"
RED
(PUSH TO TEST)

PB 21: "MASTER START"
GREEN
(MOMENTARY)

PB 22: "MASTER STOP" (LOCAL)
RED MUSHROOM
(MAINTAINED)

PB 31: "AUTO STOP"
RED EXTENDED HEAD
(MOMENTARY)

PB 32: "AUTO START"
GREEN FLUSH HEAD
(MOMENTARY

PB 33: "RESET"
YELLOW FLUSH HEAD
(MOMENTARY)
HM 331: BLR 331 RUN TIME
HOUR METER

PB 23 "MASTER STOP" (REMOTE)
RED MUSHROOM
(MAINTAINED)

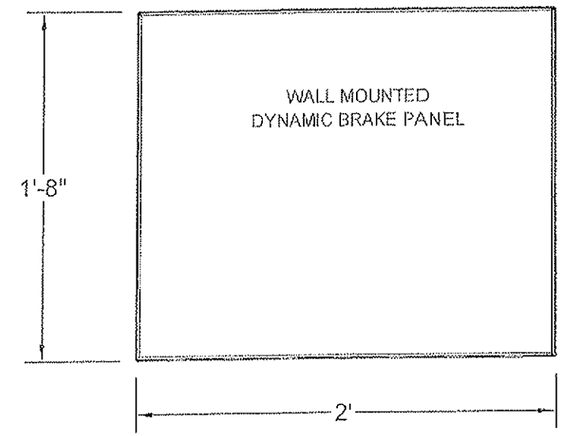

COMPONENTS

- PANEL: HOFFMAN CSD483612
- DIS 31: PROFACE AGP3300-L1-D24
- HANDLE: HOFFMAN CWHPTO

PRELIMINARY

UNISON SOLUTIONS

Unison Solutions Inc.
5451 Chavenelle Road
Dubuque, IA 52002
PHONE: 563-585-0967 FAX: 563-585-0970

PROJECT	074 - DURHAM		
DESCRIPTION	CONTROL PANEL DOOR LAYOUT		
DRAWN BY	EDW	DATE	10-15-08
DWG. NO.	4P-074-1-01		

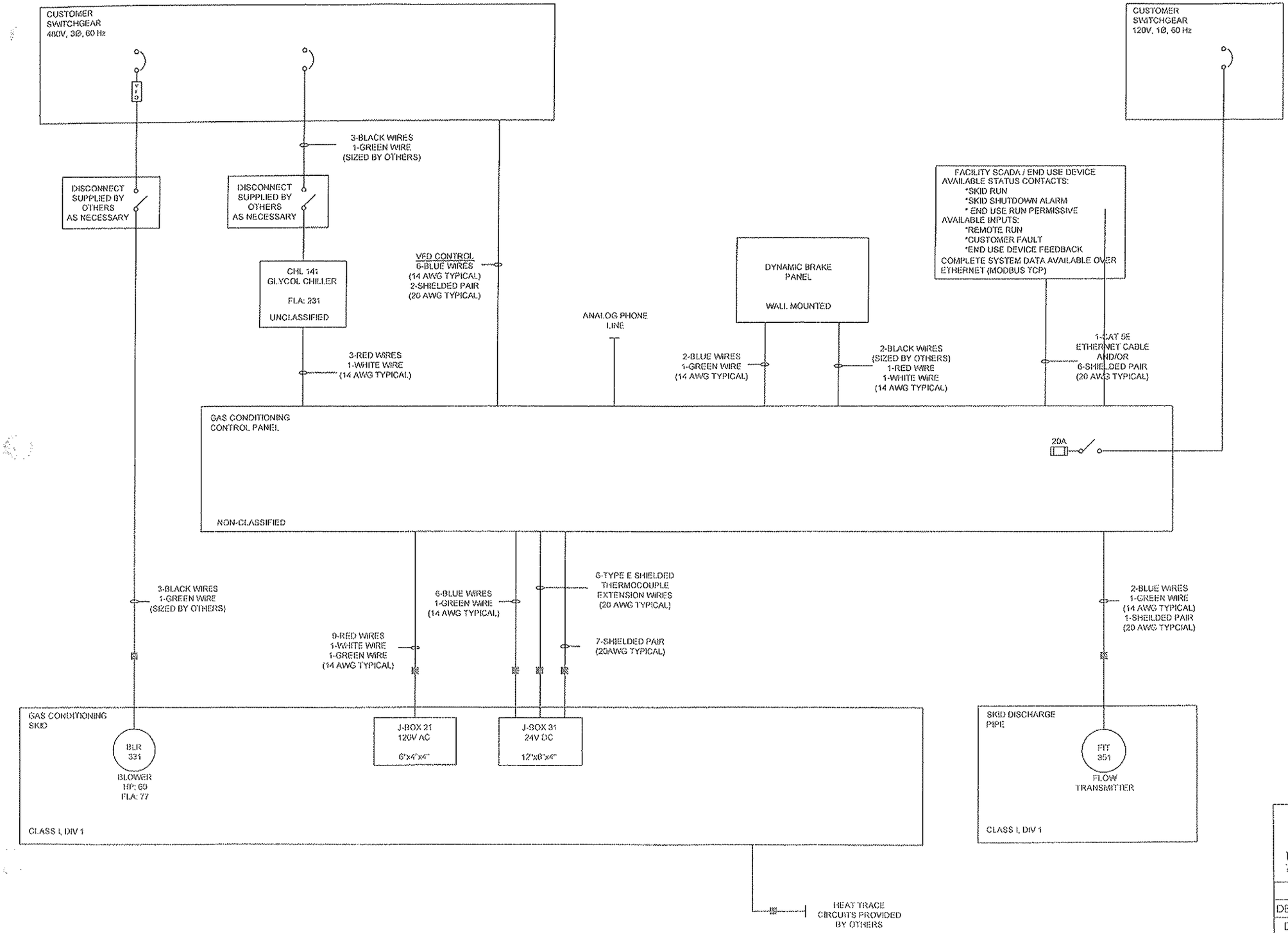

SEAL OFFS

1. CONDUIT RUNS TO UNCLASSIFIED AREAS WHICH PASS THROUGH CLASSIFIED AREAS MAY REQUIRE SEAL OFFS AT EACH CLASSIFIED AREA BOUNDARY
2. WIRE COUNTS INCLUDE SPARES. SEE TERMINATION SCHEDULE DRAWINGS (7E-XXX-X-XX) FOR LANDING WIRES AND MARK EXTRA AS "SPARE"
3. CONDUITS SIZED BY OTHERS
4. THIS DRAWING DOES NOT SHOW FIELD LOCATED RECEPTACLES AND/OR LIGHTING
5. SHIELDED PAIR WIRE TO BE BELDEN PART NUMBER 1033A OR EQUIVALENT
6. THERMOCOUPLE WIRE TO BE BELDEN PART NUMBER 83955 OR EQUIVALENT
7. FOR OUTDOOR EQUIPMENT, PROPER GROUNDING MUST BE INSTALLED TO PROVIDE LIGHTNING PROTECTION ACCORDING TO THE NEC 250.103. DRILL AND TAP GROUND LUGS TO EACH OUTDOOR SKID DECK AND TO ONE LEG OF EACH OUTDOOR FILTRATION VESSEL. BOND THE EQUIPMENT TO THE SERVICE ENTRANCE ELECTRODE SYSTEM.

UNISON SOLUTIONS
Unison Solutions Inc.
5451 Chavenelle Road
Dubuque, IA 52002
PHONE: 563-585-0967 FAX: 563-585-0970

PROJECT	074 - DURHAM		
DESCRIPTION	ELECTRICAL ONE LINE DIAGRAM		
DRAWN BY	EDW	DATE	10-16-08
DWG. NO.	4L-074-1-01		

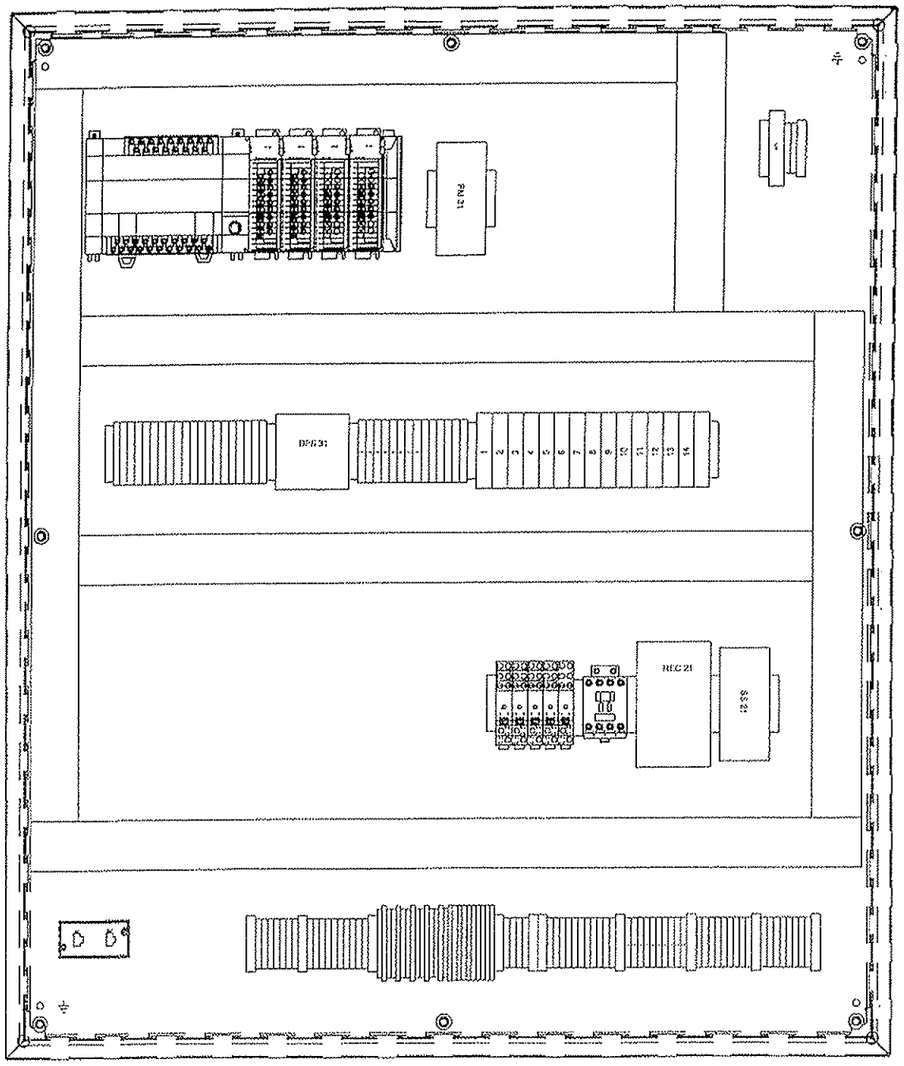

SCALE

6"

12"

UNISON SOLUTIONS	Unison Solutions Inc. 5451 Chavenelle Road Dubuque, IA 52002 PHONE: 563-585-0967 FAX: 563-585-0970		
PROJECT	074 - DURHAM		
DESCRIPTION	CONTROL PANEL INTERIOR LAYOUT		
DRAWN BY	EDW	DATE	10-15-08
DWG. NO.	4P-074-1-02		

DRAWING LIST
4E-074-X-01
4E-074-X-11
4E-074-X-12
4E-074-X-13
4E-074-X-14
4E-074-X-21
4E-074-X-22
4E-074-X-31
4E-074-X-32
4E-074-X-41
4E-074-X-51
4E-074-X-52
4E-074-X-53
4E-074-X-61
4E-074-X-71
4E-074-X-72
4E-074-X-81

0100
0101
0102
0103
0104
0105
0106
0107
0108
0109
0110
0111
0112
0113
0114
0115
0116
0117
0118
0119

DISCONNECT & OVER CURRENT
PROTECTION PROVIDED BY OTHERS

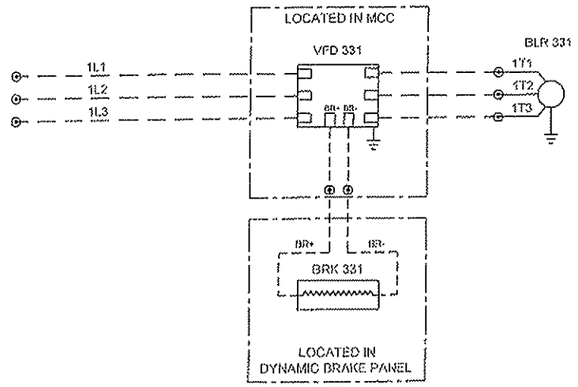

BLR 331
GAS BLOWER 331
(BLR 331 CONTROL CIRCUITS: 2208, 3202, 4104, 5303, 6106)

HP 60
RPM ?
FLA 77
SF ?

BRK 331
DYNAMIC BRAKE RESISTOR
(BRK 331 HIGH TEMP SWITCH: RUNG 3203)

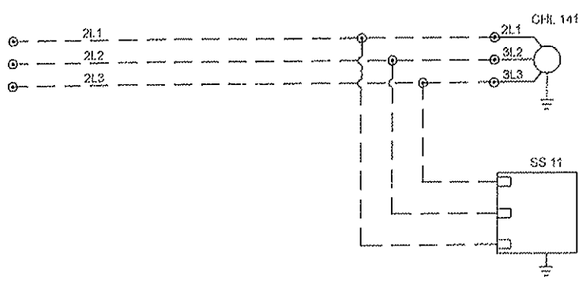

CHL 141
GLYCOL CHILLER
(CHL 141 CONTROL CIRCUIT: RUNG 7104)

FLA 231
GPM ?

UNISON SOLUTIONS

Unison Solutions Inc.
5451 Chavenelle Road
Dubuque, IA 52002
PHONE: 563-585-0967 FAX: 563-585-0970

PROJECT	074 - DURHAM		
DESCRIPTION	480V LOADS		
DRAWN BY	EDW	DATE	10-14-08
DWG. NO.	4E-074-1-01		

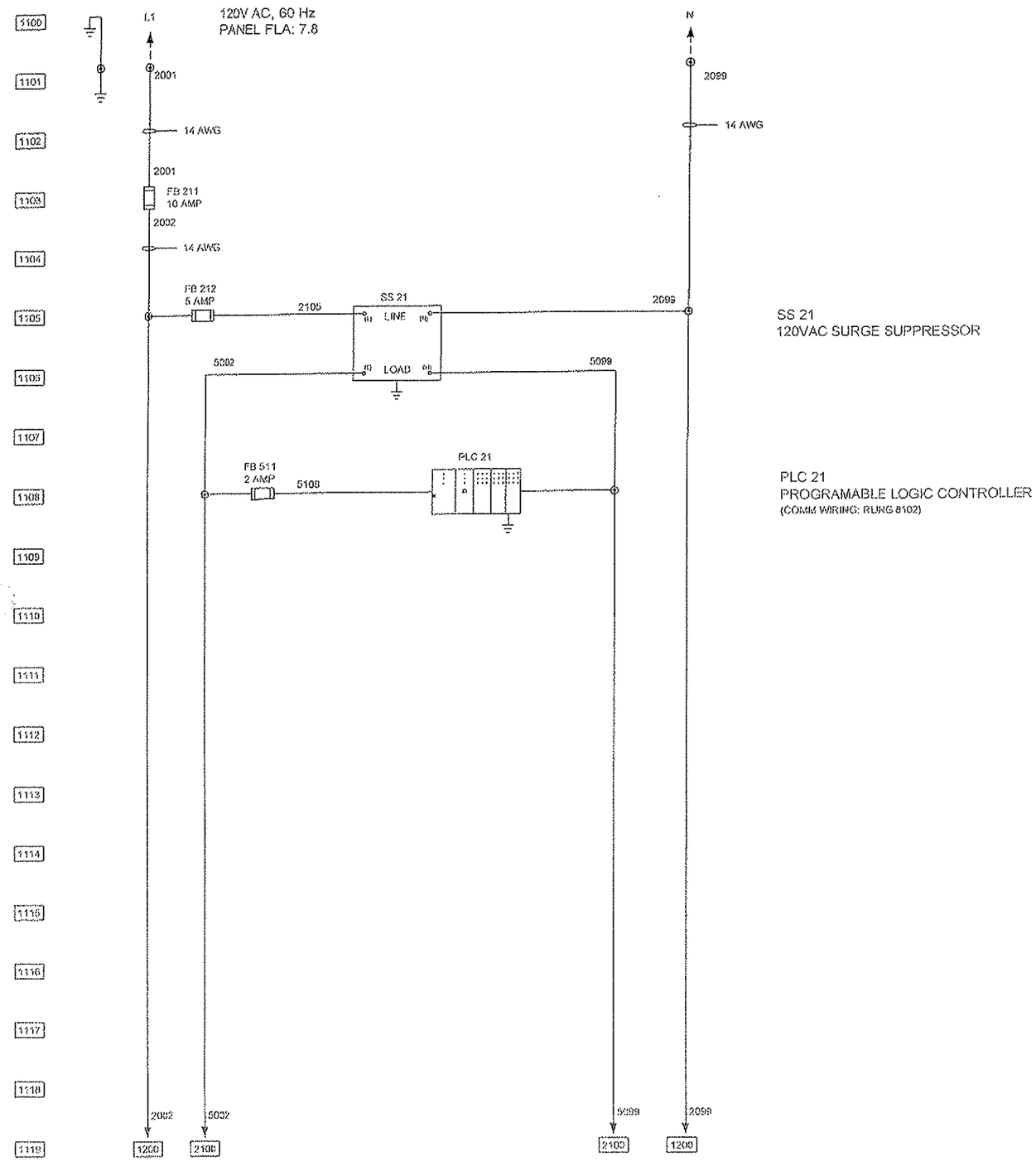

SS 21
120VAC SURGE SUPPRESSOR

PLC 21
PROGRAMABLE LOGIC CONTROLLER
(COMM WIRING: RUNG 8102)

UNISON SOLUTIONS

Unison Solutions Inc.
5451 Chavenelle Road
Dubuque, IA 52002
PHONE: 563-585-0967 FAX: 563-585-0970

PROJECT	074 - DURHAM		
DESCRIPTION	CONTROL PANEL		
DRAWN BY	EDW	DATE	10-14-08
DWG. NO.	4E-074-1-11		

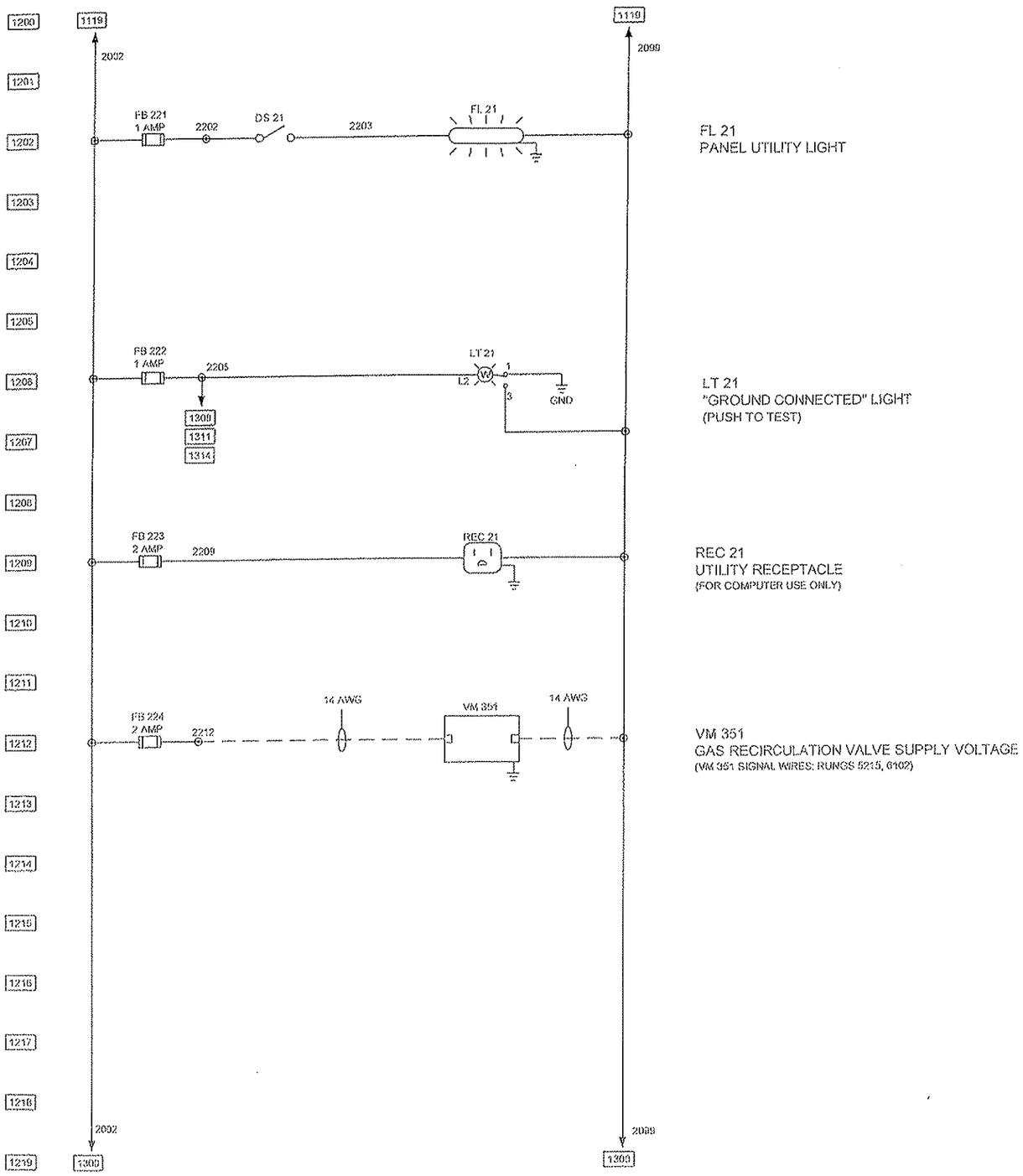

FL 21
PANEL UTILITY LIGHT

LT 21
"GROUND CONNECTED" LIGHT
(PUSH TO TEST)

REC 21
UTILITY RECEPTACLE
(FOR COMPUTER USE ONLY)

VM 351
GAS RECIRCULATION VALVE SUPPLY VOLTAGE
(VM 351 SIGNAL WIRES: RUNGS 5215, 6102)

UNISON SOLUTIONS

Unison Solutions Inc.
5451 Chavenelle Road
Dubuque, IA 52002
PHONE: 563-585-0967 FAX: 563-585-0970

PROJECT	074 - DURHAM		
DESCRIPTION	CONTROL PANEL		
DRAWN BY	EDW	DATE	10-13-08
DWG. NO.	4E-074-1-12		

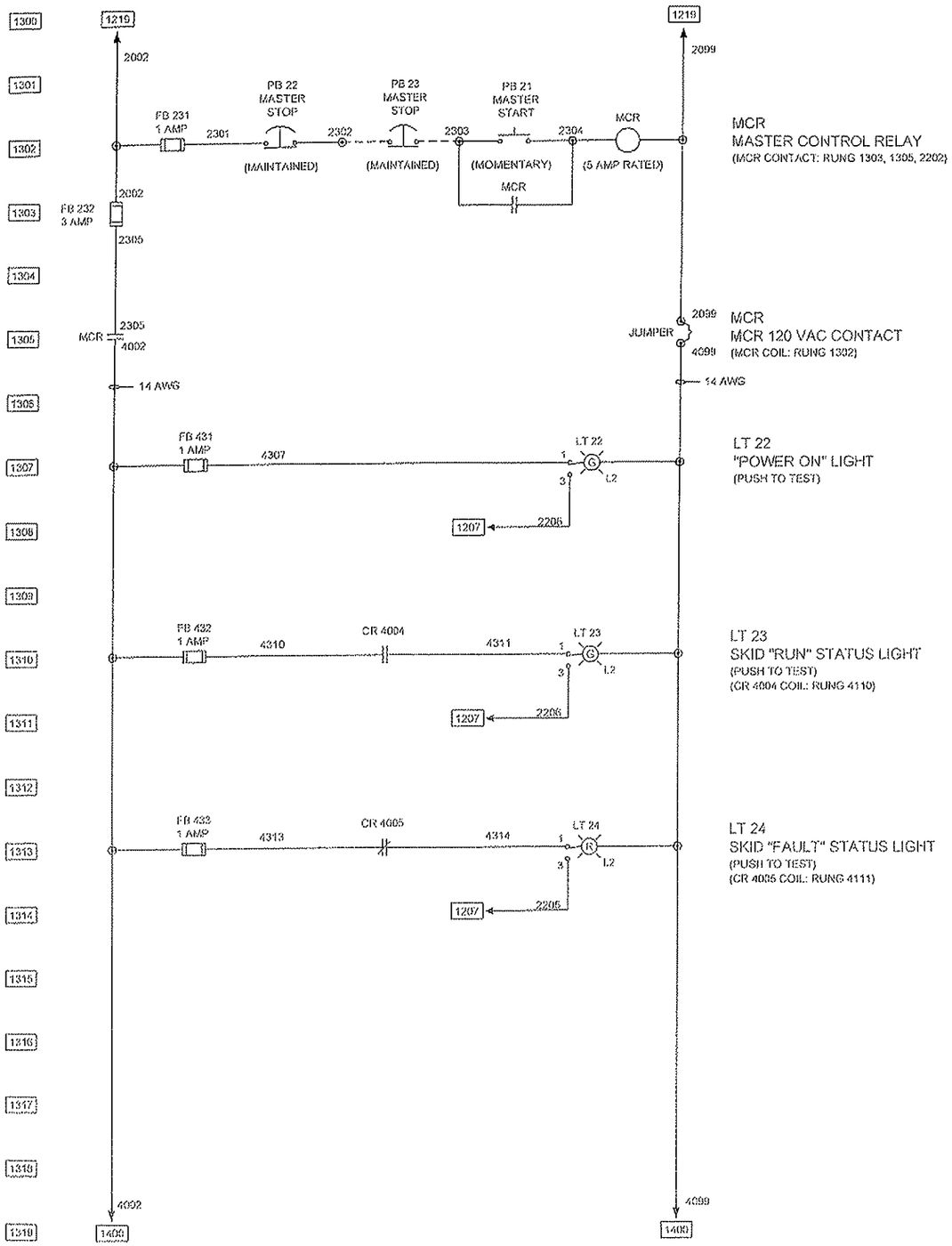

UNISON SOLUTIONS

Unison Solutions Inc.
5451 Chavenelle Road
Dubuque, IA 52002
PHONE: 563-585-0967 FAX: 563-585-0970

PROJECT	074 - DURHAM		
DESCRIPTION	CONTROL PANEL		
DRAWN BY	EDW	DATE	10-14-08
DWG. NO.	4E-074-1-13		

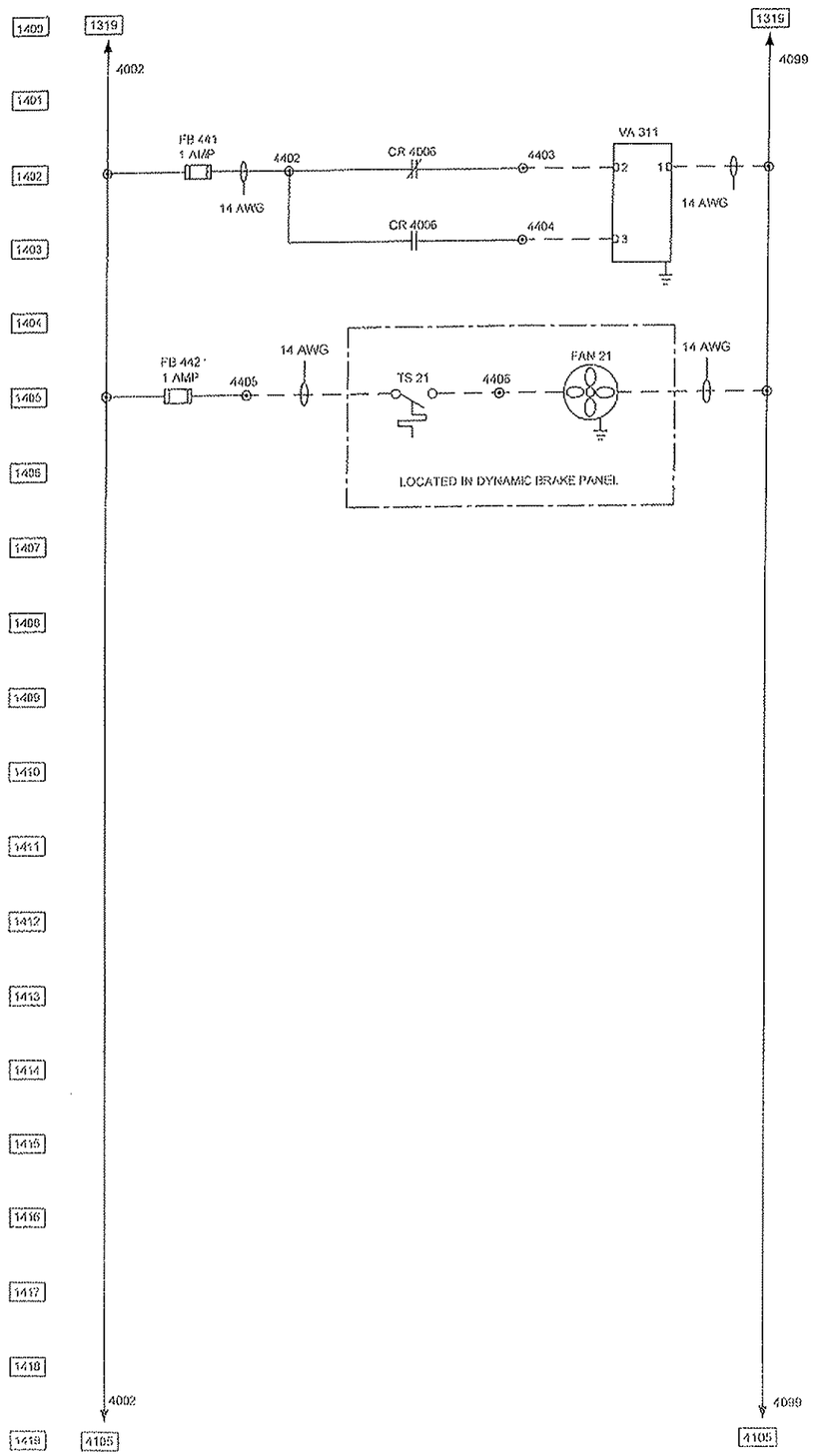

VA 311
SKID INLET GAS SHUT OFF VALVE
(CR 4006 COIL: RUNG 4112)
(FOR HEATER PLACE JUMPER BETWEEN TERMINAL 6 & NO CONTACT ON TERMINAL 3)

FAN 21
DYNAMIC BRAKE COOLING FAN
(LOCATED IN DYNAMIC BRAKE PANEL)

UNISON SOLUTIONS

Unison Solutions Inc.
5451 Chavenelle Road
Dubuque, IA 52002
PHONE: 563-585-0967 FAX: 563-585-0970

PROJECT	074 - DURHAM		
DESCRIPTION	CONTROL PANEL		
DRAWN BY	EDW	DATE	10-15-08
DWG. NO.	4E-074-1-14		

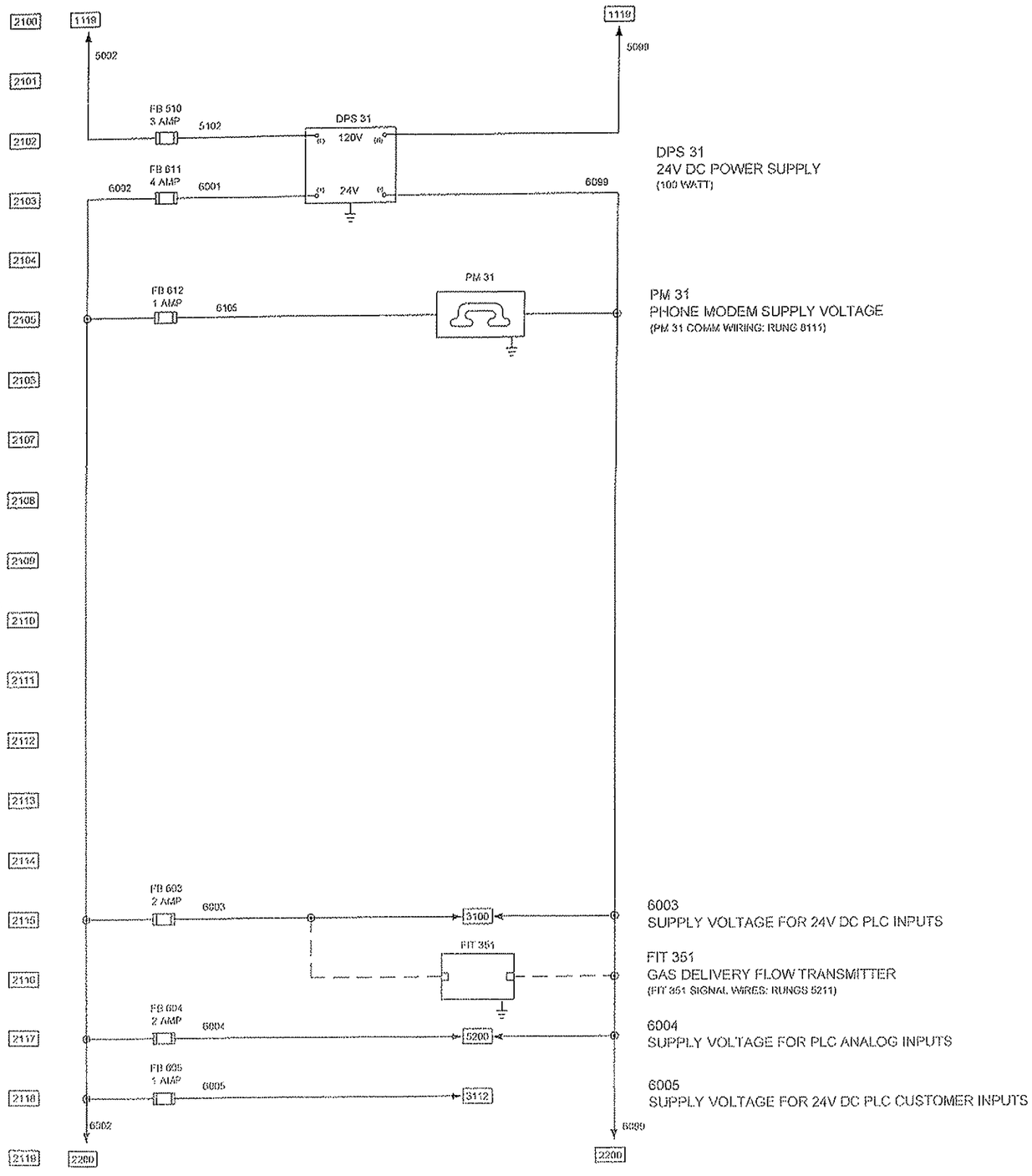

DPS 31
24V DC POWER SUPPLY
(100 WATT)

PM 31
PHONE MODEM SUPPLY VOLTAGE
(PM 31 COMM WIRING: RUNG 8111)

6003
SUPPLY VOLTAGE FOR 24V DC PLC INPUTS

FIT 351
GAS DELIVERY FLOW TRANSMITTER
(FIT 351 SIGNAL WIRES: RUNGS 5211)

6004
SUPPLY VOLTAGE FOR PLC ANALOG INPUTS

6005
SUPPLY VOLTAGE FOR 24V DC PLC CUSTOMER INPUTS

UNISON SOLUTIONS
Unison Solutions Inc.
5451 Chavenelle Road
Dubuque, IA 52002
PHONE: 563-585-0967 FAX: 563-585-0970

PROJECT	074 - DURHAM		
DESCRIPTION	CONTROL PANEL		
DRAWN BY	EDW	DATE	10-14-08
DWG. NO.	4E-074-1-21		

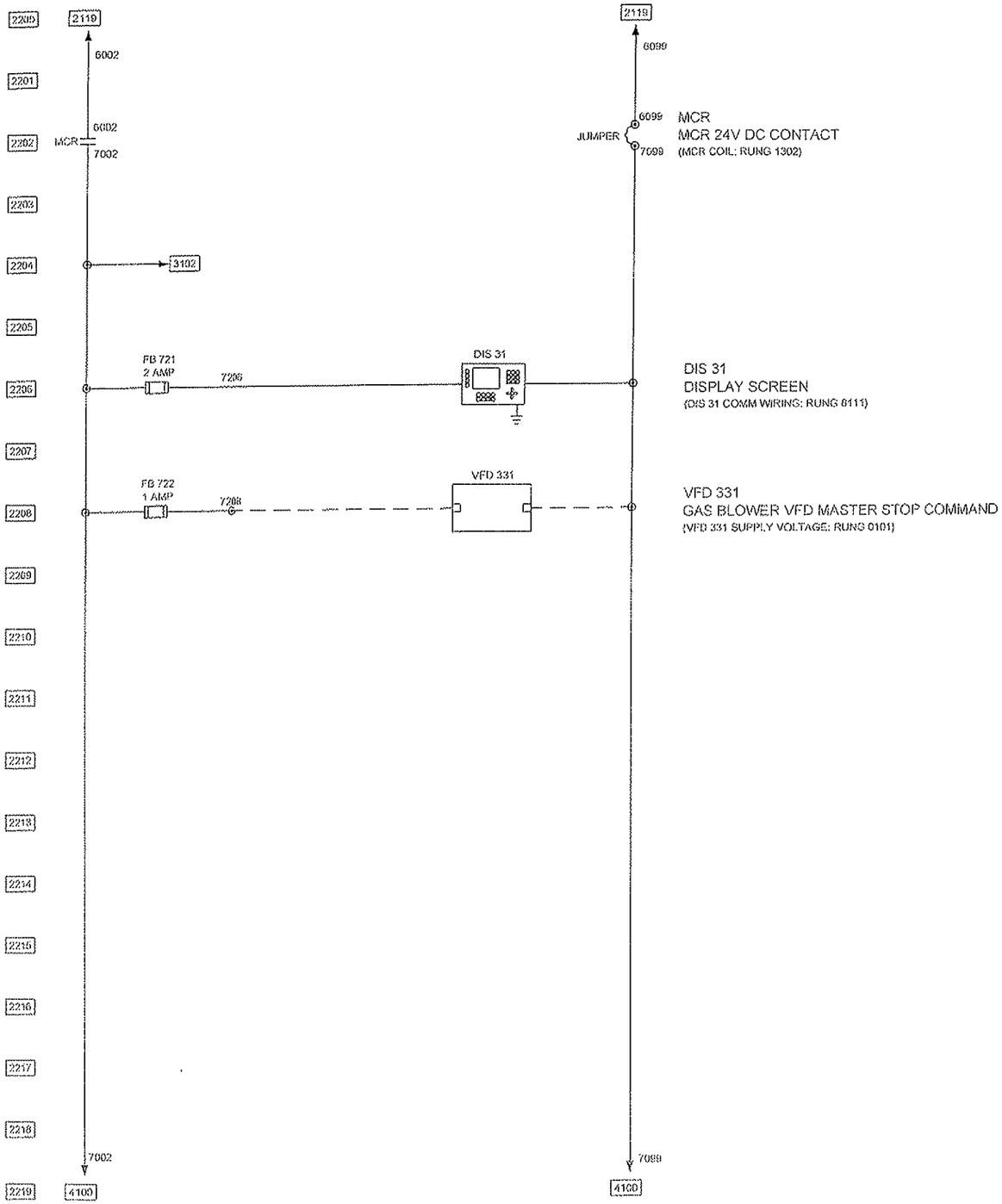

UNISON SOLUTIONS

Unison Solutions Inc.
5451 Chavenelle Road
Dubuque, IA 52002
PHONE: 563-585-0967 FAX: 563-585-0970

PROJECT	074 - DURHAM		
DESCRIPTION	CONTROL PANEL		
DRAWN BY	EDW	DATE	10-14-08
DWG. NO.	4E-074-1-22		

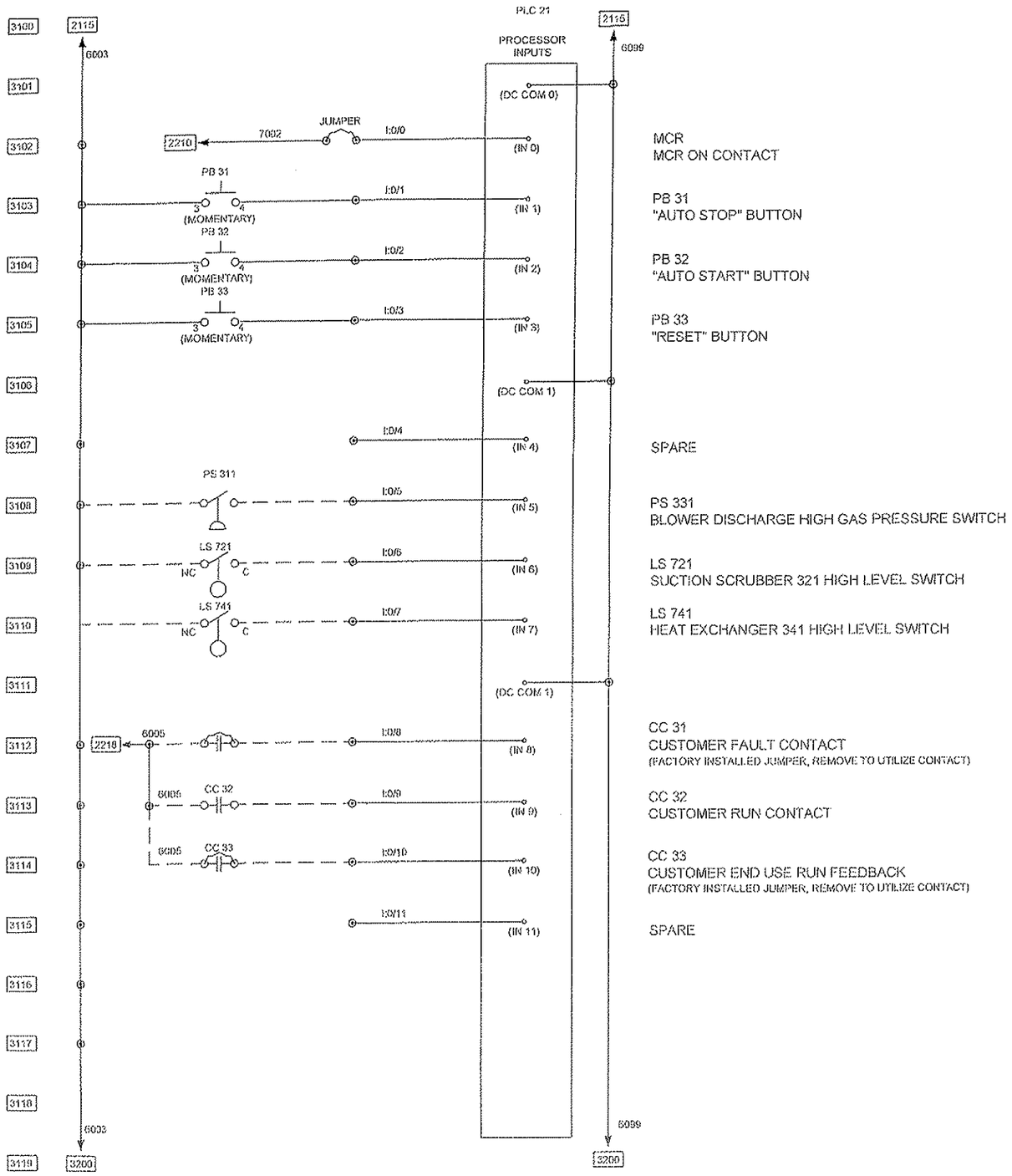

MCR
MCR ON CONTACT

PB 31
"AUTO STOP" BUTTON

PB 32
"AUTO START" BUTTON

PB 33
"RESET" BUTTON

SPARE

PS 331
BLOWER DISCHARGE HIGH GAS PRESSURE SWITCH

LS 721
SUCTION SCRUBBER 321 HIGH LEVEL SWITCH

LS 741
HEAT EXCHANGER 341 HIGH LEVEL SWITCH

CC 31
CUSTOMER FAULT CONTACT
(FACTORY INSTALLED JUMPER, REMOVE TO UTILIZE CONTACT)

CC 32
CUSTOMER RUN CONTACT

CC 33
CUSTOMER END USE RUN FEEDBACK
(FACTORY INSTALLED JUMPER, REMOVE TO UTILIZE CONTACT)

SPARE

4E13512

UNISON SOLUTIONS
Unison Solutions Inc.
5451 Chavenelle Road
Dubuque, IA 52002
PHONE: 563-585-0967 FAX: 563-585-0970

PROJECT	074 - DURHAM		
DESCRIPTION	CONTROL PANEL		
DRAWN BY	EDW	DATE	10-14-08
DWG. NO.	4E-074-1-31		

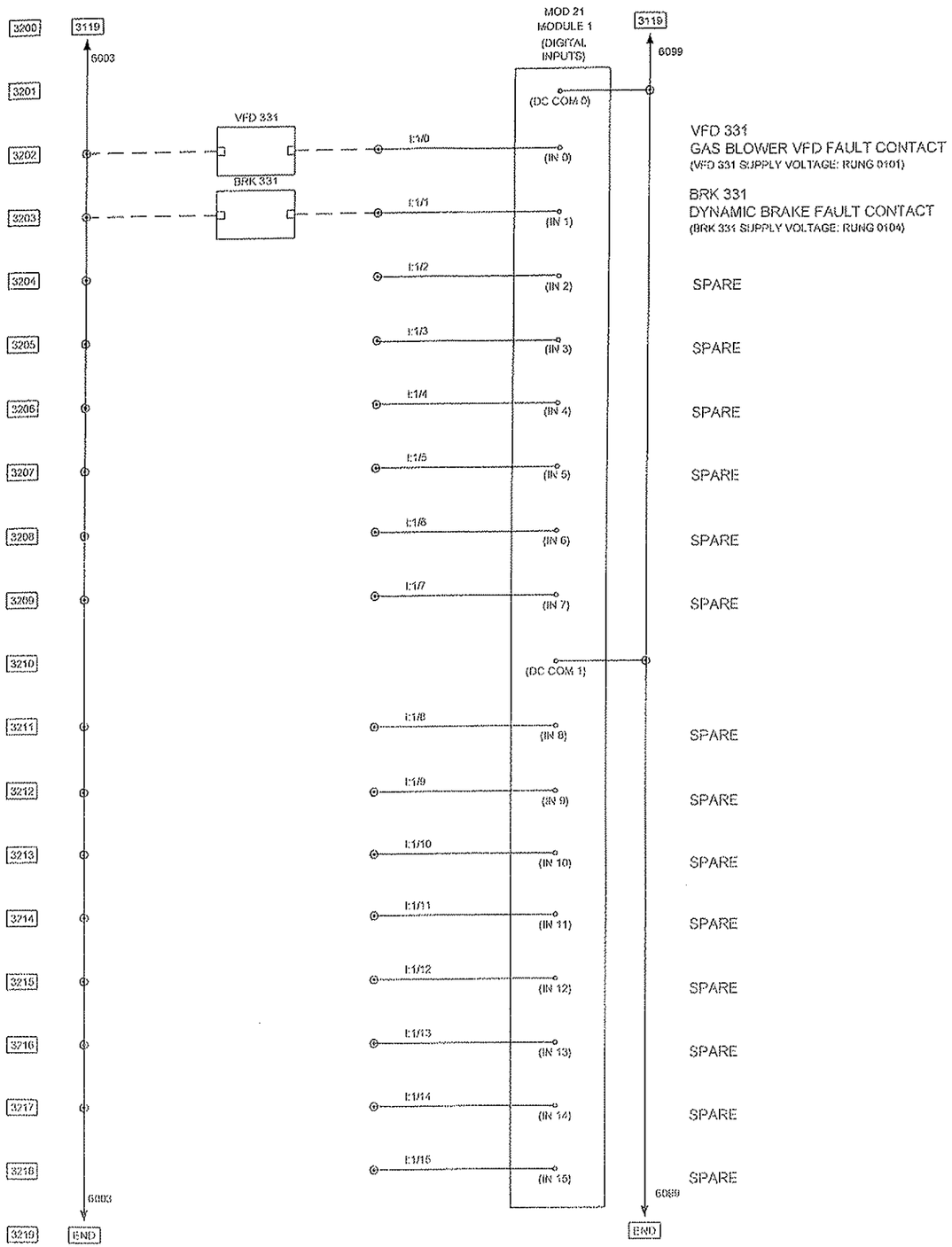

4E13516

UNISON SOLUTIONS
Unison Solutions Inc.
5451 Chavenelle Road
Dubuque, IA 52002
PHONE: 563-585-0967 FAX: 563-585-0970

PROJECT	074 - DURHAM		
DESCRIPTION	CONTROL PANEL		
DRAWN BY	EDW	DATE	10-14-08
DWG. NO.	4E-074-1-32		

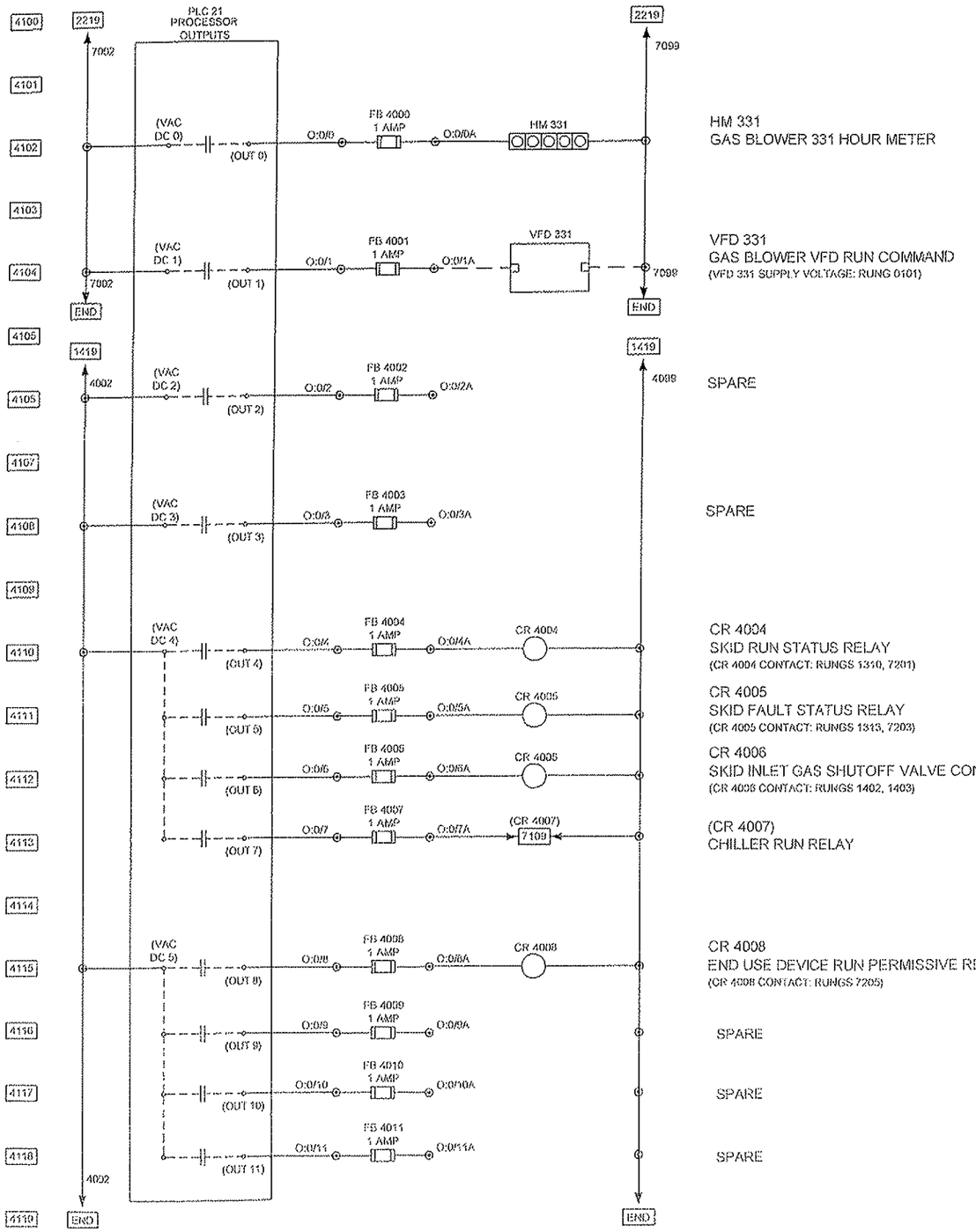

HM 331
GAS BLOWER 331 HOUR METER

VFD 331
GAS BLOWER VFD RUN COMMAND
(VFD 331 SUPPLY VOLTAGE: RUNG 0101)

SPARE

SPARE

CR 4004
SKID RUN STATUS RELAY
(CR 4004 CONTACT: RUNGS 1310, 7201)

CR 4005
SKID FAULT STATUS RELAY
(CR 4005 CONTACT: RUNGS 1313, 7203)

CR 4006
SKID INLET GAS SHUTOFF VALVE CONTROL RELAY
(CR 4006 CONTACT: RUNGS 1402, 1403)

(CR 4007)
CHILLER RUN RELAY

CR 4008
END USE DEVICE RUN PERMISSIVE RELAY.
(CR 4008 CONTACT: RUNGS 7205)

SPARE

SPARE

SPARE

4E14512

UNISON SOLUTIONS
Unison Solutions Inc.
5451 Chavenelle Road
Dubuque, IA 52002
PHONE: 563-585-0967 FAX: 563-585-0970

PROJECT	074 - DURHAM		
DESCRIPTION	CONTROL PANEL		
DRAWN BY	EDW	DATE	10-14-08
DWG. NO.	4E-074-1-41		

5100
5101
5102
5103
5104
5105
5106
5107
5108
5109
5110
5111
5112
5113
5114
5115
5116
5117
5118
5119

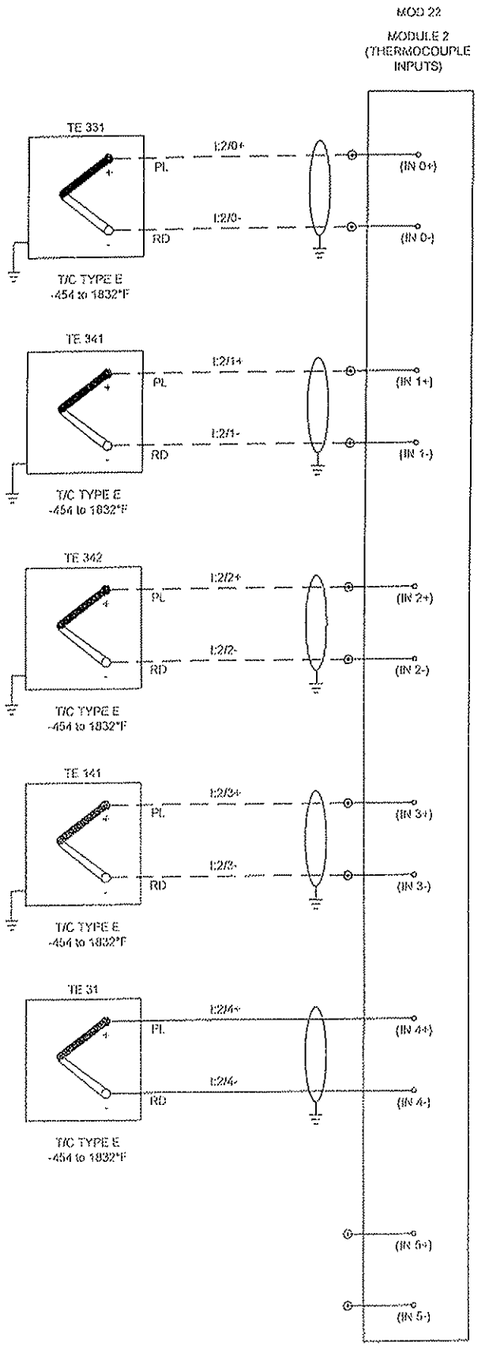

TE 331
GAS BLOWER DISCHARGE TEMPERATURE THERMOCOUPLE

TE 341
GAS DEW POINT TEMPERATURE THERMOCOUPLE

TE 342
REHEAT GAS TEMPERATURE THERMOCOUPLE

TE 141
GLYCOL TEMPERATURE THERMOCOUPLE

TE 31
INTERNAL PANEL TEMPERATURE THERMOCOUPLE

SPARE

4E15599

UNISON SOLUTIONS
Unison Solutions Inc.
5451 Chavenelle Road
Dubuque, IA 52002
PHONE: 563-585-0967 FAX: 563-585-0970

PROJECT	074 - DURHAM		
DESCRIPTION	CONTROL PANEL		
DRAWN BY	EDW	DATE	10-14-08
DWG. NO.	4E-074-1-51		

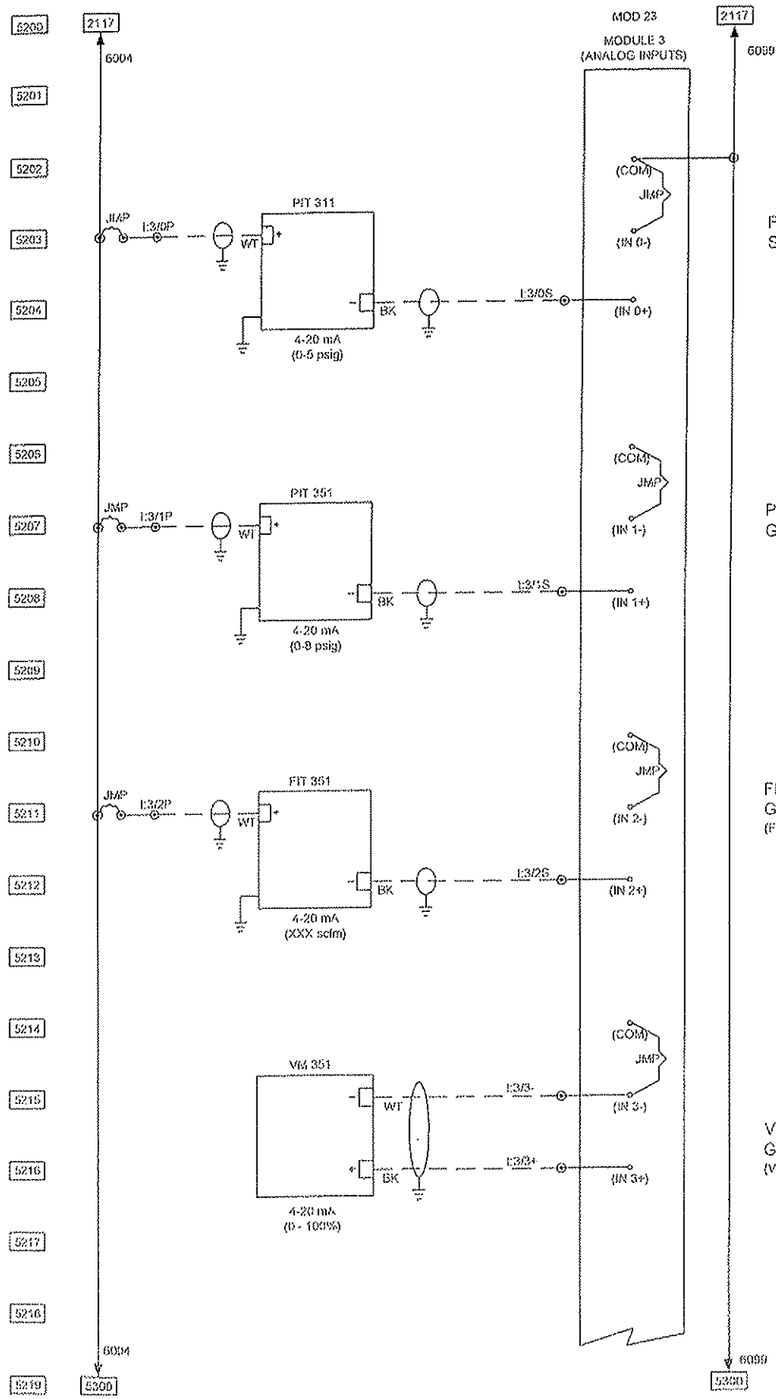

PT 311
SKID INLET GAS PRESSURE TRANSMITTER

PIT 351
GAS DELIVERY PRESSURE TRANSMITTER

FIT 351
GAS DELIVERY FLOW TRANSMITTER
(FIT 351 SUPPLY VOLTAGE: RUNG 2116)

VM 351
GAS RECIRCULATION VALVE 351 FEEDBACK POSITION
(VM 351 SUPPLY VOLTAGE: RUNG 1212)

4E15508

UNISON SOLUTIONS
Unison Solutions Inc.
5451 Chavenelle Road
Dubuque, IA 52002
PHONE: 563-585-0967 FAX: 563-585-0970

PROJECT	074 - DURHAM		
DESCRIPTION	CONTROL PANEL		
DRAWN BY	EDW	DATE	10-14-08
DWG. NO.	4E-074-1-52		

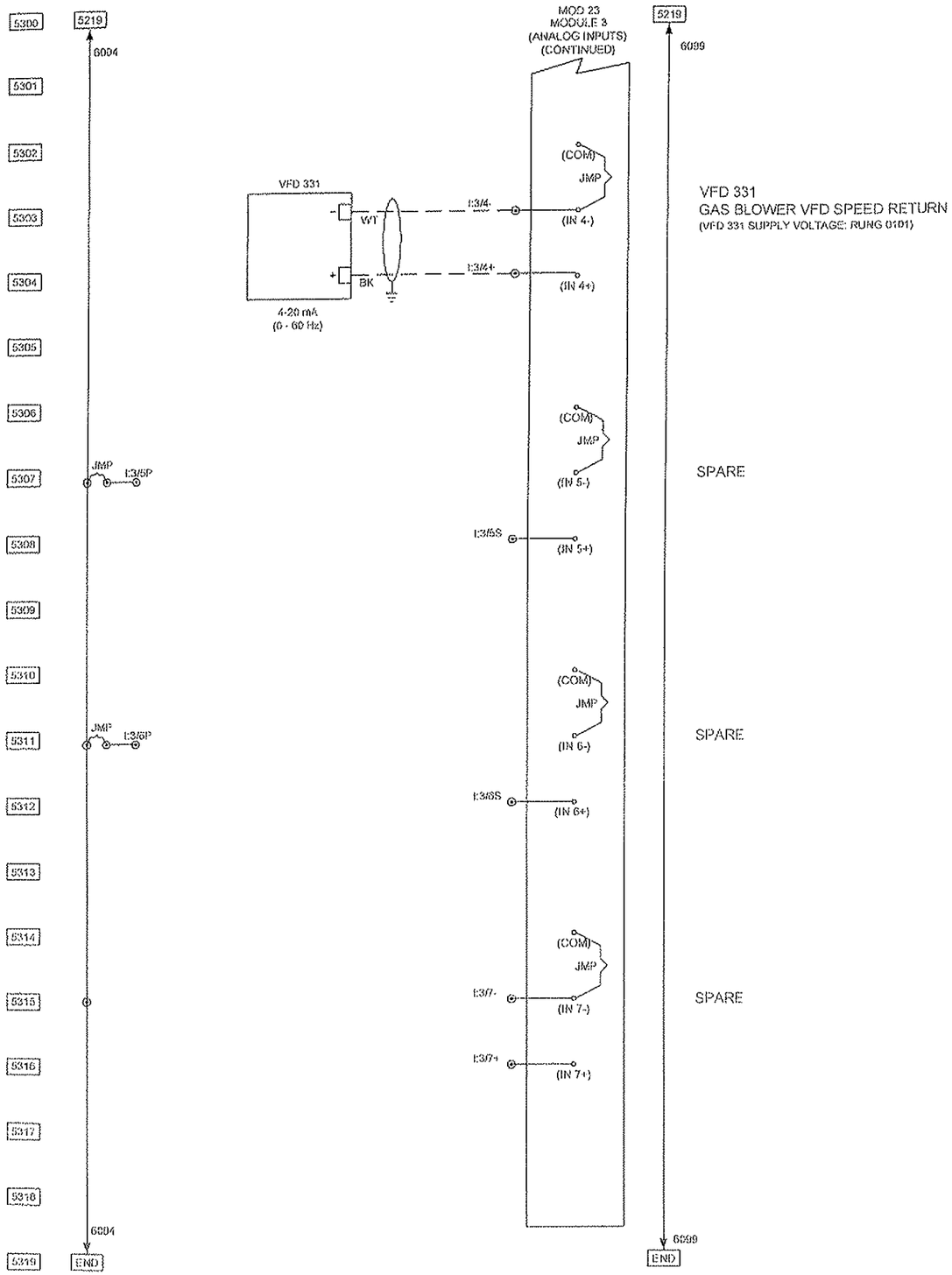

4E25508

UNISON SOLUTIONS
Unison Solutions Inc.
5451 Chavenelle Road
Dubuque, IA 52002
PHONE: 563-585-0967 FAX: 563-585-0970

PROJECT	074 - DURHAM		
DESCRIPTION	CONTROL PANEL		
DRAWN BY	EDW	DATE	10-14-08
DWG. NO.	4E-074-1-53		

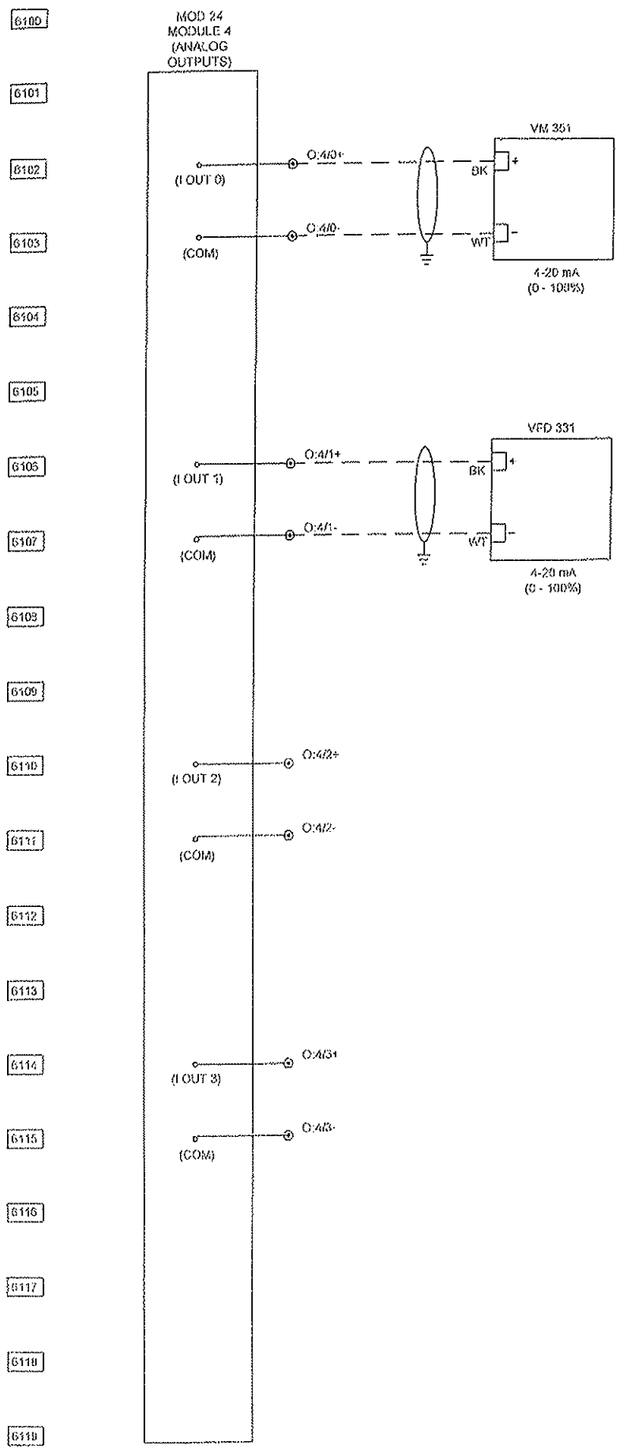

VM 351
GAS RECIRCULATION VALVE 351 POSITION COMMAND
(VM 351 SUPPLY VOLTAGE: RUNG 1212)

VFD 331
GAS BLOWER VFD SPEED COMMAND
(VFD 331 SUPPLY VOLTAGE: RUNG 0101)

SPARE

SPARE

4E16504

UNISON SOLUTIONS
Unison Solutions Inc.
5451 Chavenelle Road
Dubuque, IA 52002
PHONE: 563-585-0967 FAX: 563-585-0970

PROJECT	074 - DURHAM		
DESCRIPTION	CONTROL PANEL		
DRAWN BY	EDW	DATE	10-14-08
DWG. NO.	4E-074-1-61		

7100
7101
7102
7103
7104
7105
7106
7107
7108
7109
7110
7111
7112
7113
7114
7115
7116
7117
7118
7119

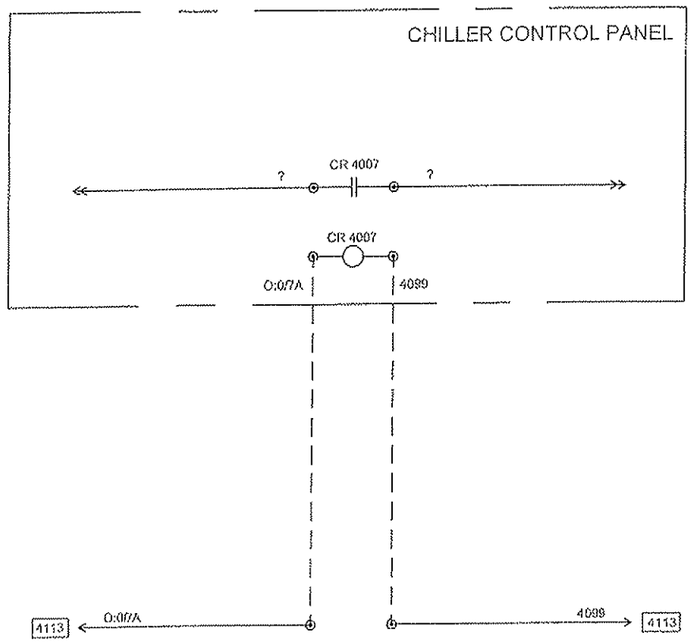

CR 4301
CHILLER RUN RELAY AND CONTACT
(CHL 141 SUPPLY VOLTAGE: RUNG 0107)

UNISON SOLUTIONS

Unison Solutions Inc.
5451 Chavenelle Road
Dubuque, IA 52002
PHONE: 563-585-0967 FAX: 563-585-0970

PROJECT	074 - DURHAM		
DESCRIPTION	CONTROL PANEL		
DRAWN BY	EDW	DATE	10-14-08
DWG. NO.	4E-074-1-71		

7200

7201

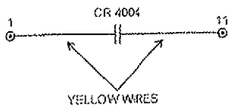

CR 4004
SKID RUN STATUS CONTACT
CONTACT RATED 5AMPS @ 120V AC
(CR 4004 COIL: RUNG 4110)

7202

7203

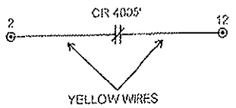

CR 4005
SKID FAULT STATUS CONTACT
CONTACT RATED 5AMPS @ 120V AC
(CR 4005 COIL: RUNG 4111)
*(CR 4005 WILL ENERGIZE CLOSE WITH NO FAULT, AND DE-ENERGIZE (OPEN) WHEN FAULT EXISTS)

7204

7205

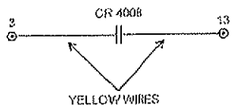

CR 4008
END USE DEVICE RUN PERMISSIVE CONTACT
CONTACT RATED 5AMPS @ 120V AC
(CR 4008 COIL: RUNG 4115)

7206

7207

7208

7209

7210

7211

7212

7213

7214

7215

7216

7217

7218

7219

UNISON SOLUTIONS

Unison Solutions Inc.
5451 Chavenelle Road
Dubuque, IA 52002
PHONE: 563-585-0967 FAX: 563-585-0970

PROJECT	074 - DURHAM		
DESCRIPTION	CONTROL PANEL		
DRAWN BY	EDW	DATE	10-14-08
DWG. NO.	4E-074-1-72		

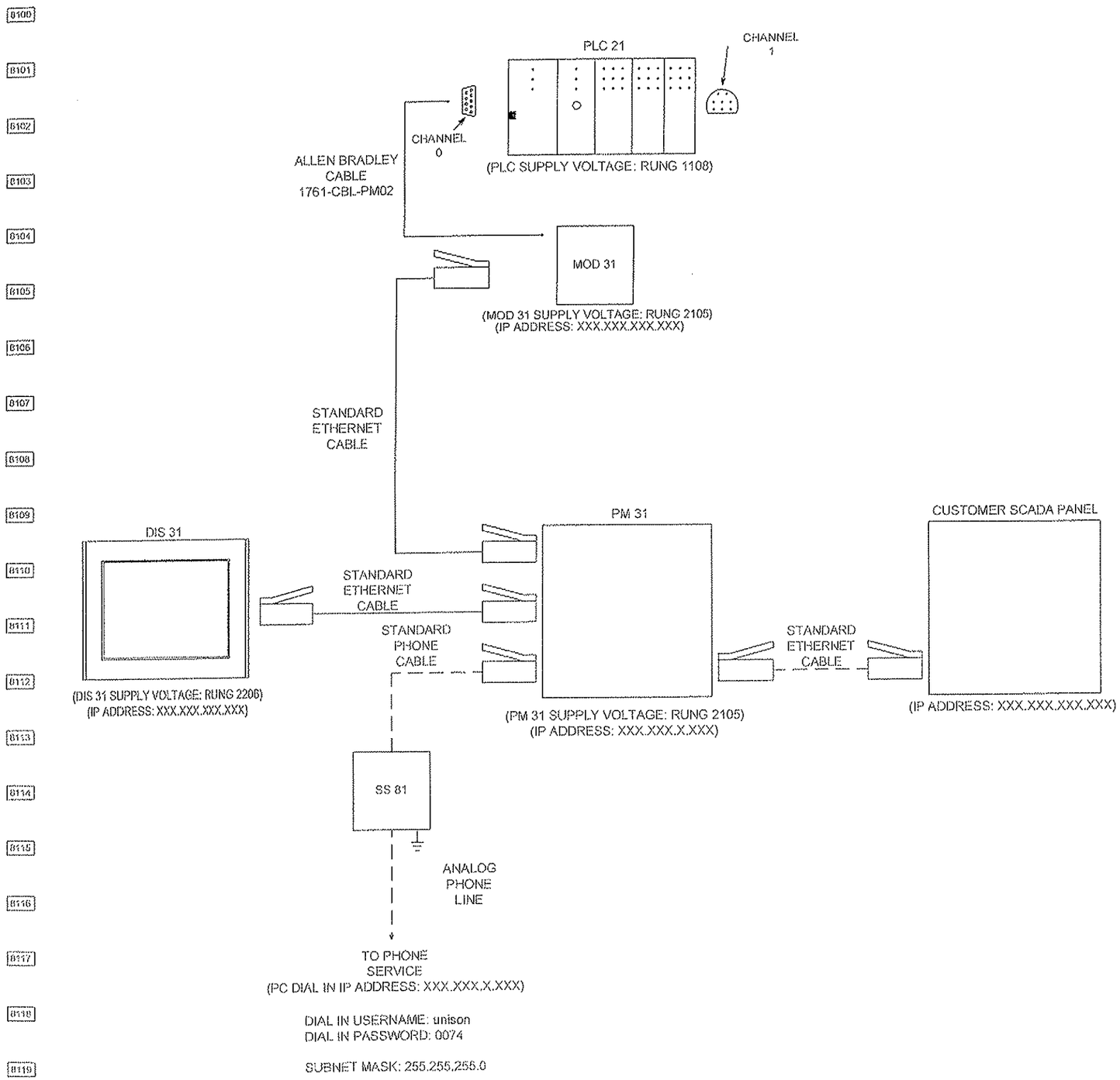

Unison Solutions Inc.
5451 Chavenelle Road
Dubuque, IA 52002
PHONE: 563-585-0967 FAX: 563-585-0970

PROJECT	074 - DURHAM		
DESCRIPTION	CONTROL PANEL		
DRAWN BY	EDW	DATE	10-14-08
DWG. NO.	4E-074-1-81		

REVISIONS				
REV. SYMBOL	REV. BY	APPR. BY	DATE	DESCRIPTION OF CHANGE

TOP VIEW

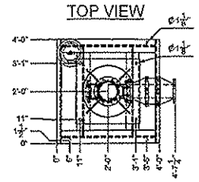

FRONT VIEW

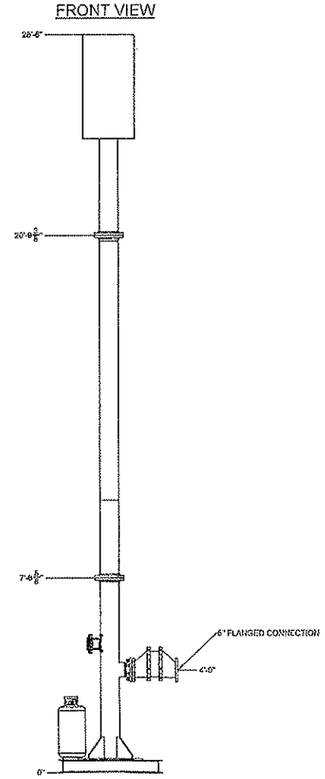

ISOMETRIC VIEW

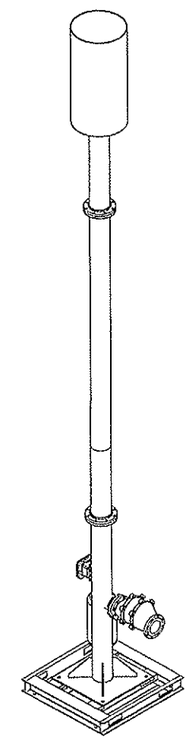

UNISON SOLUTIONS	Unison Solutions Inc. 5451 Chavenelle Road Dubuque, IA 52002 PHONE: 563-585-0987 FAX: 563-585-0970		
PROJECT	678 - GREENWOOD		
DESCRIPTION	COMPLETE FLARE ASSEMBLY		
DRAWN BY	BH	DATE	11/20/2008
REVISION	1	DWG. NO.	SL-678-S1

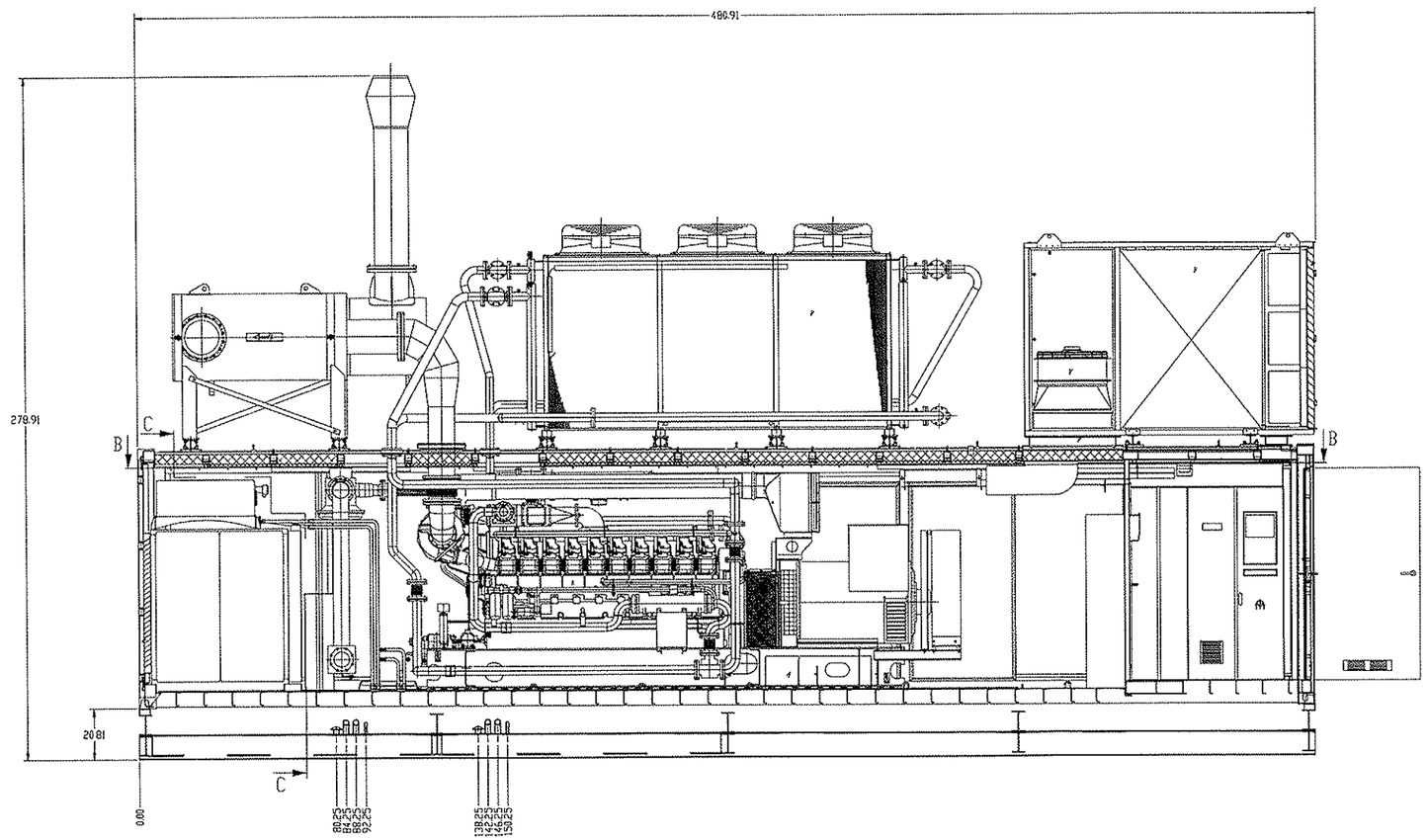

RIGHT SIDE VIEW

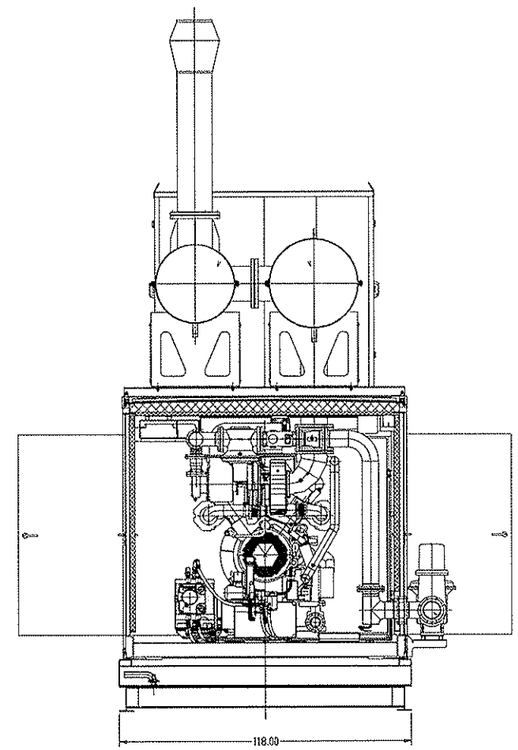

FRONT VIEW

CHG	DATE	ENGR. CHCKD	REASON

ENGINEERING CHANGES

DRN BY: L.A.R. DATE: 2-27-09
CHK BY: DATE:
APPD BY: DATE:
CONCEPT ☐ PRELIMINARY ☒ PRODUCTION ☐ AS BUILT ☐
PROJECT NO: 37681M

UNLESS OTHERWISE SPECIFIED ALL DIMENSIONS ARE ENGLISH

SCALE -
INCHES
THIRD ANGLE PROJECTION

- TOLERANCE -
UNLESS OTHERWISE SPECIFIED
FRACTIONAL DIM. ± 1/16
TWO PLACE DIM. ± .030
THREE PLACE DIM. ± .015
ANGULARITY ± 1°

THIS PRINT IS THE PROPERTY OF ENERCON AND MUST NOT BE USED IN ANY MANNER DETRIMENTAL TO THEIR BEST INTEREST.

REPORT ALL CHANGES TO ENGINEERING

DO NOT SCALE

SPEC.	DESCRIPTION
REF. ENGINEERING SPEC.	

ENERCON
ENERCON ENGINEERING, INC.
MACHINERY DIVISION
#1 ALTORFER LANE
EAST PEORIA, IL. 61611
TELEPHONE (309) 694-1418
TELEFAX (309) 694-3703

PROJECT DESCRIPTION: GEJ PACKAGE W/ OIL TANK BASE

PROJECT REF: METHANE POWER

DRAWING NO.
M-37681-GA

ITEM	QTY	LENGTH (in)	PART NO.	REV	DESCRIPTION
1	5		8IN		-
2	1		BASE_37681		-
3	2		SHEET_37681		-
4	1		TANK_A_37681		-
5	1		TANK_B_37681		-
6	4		TL		-

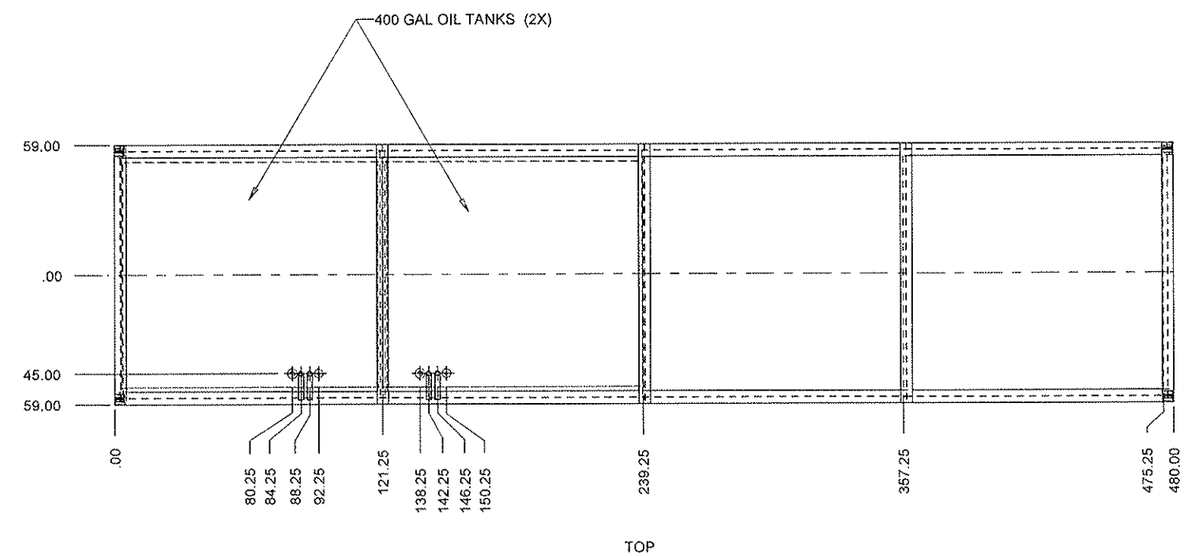

TOP

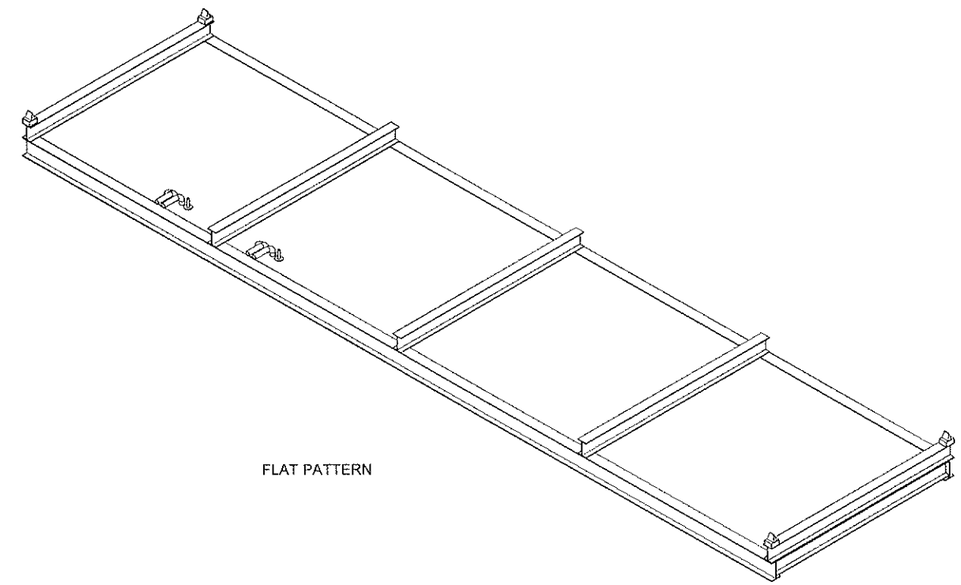

FLAT PATTERN

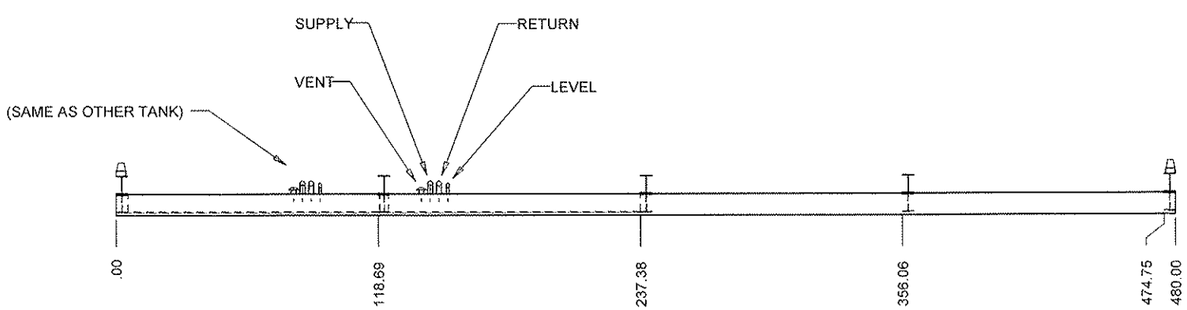

FRONT

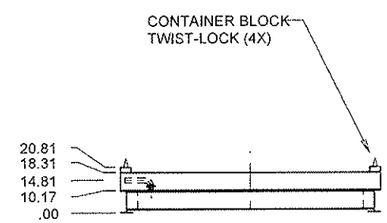

RIGHT

REVISION	DATE	ENG	DESCRIPTION

DRAWING STATUS: PRELIMINARY

PART WEIGHT: 6722 LBS

THIS PRINT IS THE PROPERTY OF ENERCON AND MUST NOT BE USED IN ANY MANNER DETRIMENTAL TO THEIR BEST INTEREST. UNLESS OTHERWISE SPECIFIED ALL DIMENSIONS ARE ENGLISH REPORT ALL CHANGES TO ENGINEERING. DO NOT SCALE

DRWN BY: L.A.R. DATE: 2/27/09

MOD BY: DATE:

APPD BY: DATE:

THIRD ANGLE PROJECTION

PROJECT # 37681M

PROJECT DESCRIPTION:

OIL TANK BASE FOR GEJ UNIT

PROJECT REFERENCE: METHANE POWER

ENERCON ENGINEERING, INC.
MACHINERY DIVISION

#1 ALTORFER LANE
EAST PEORIA, IL 61611

TELEPHONE (309)694-1418
TELEFAX (309)694-3703

DRAWING NUMBER	REVISION	SHEET
M-37681-BA	1	1 OF 1

VULCAN

STEEL STRUCTURES, INC.

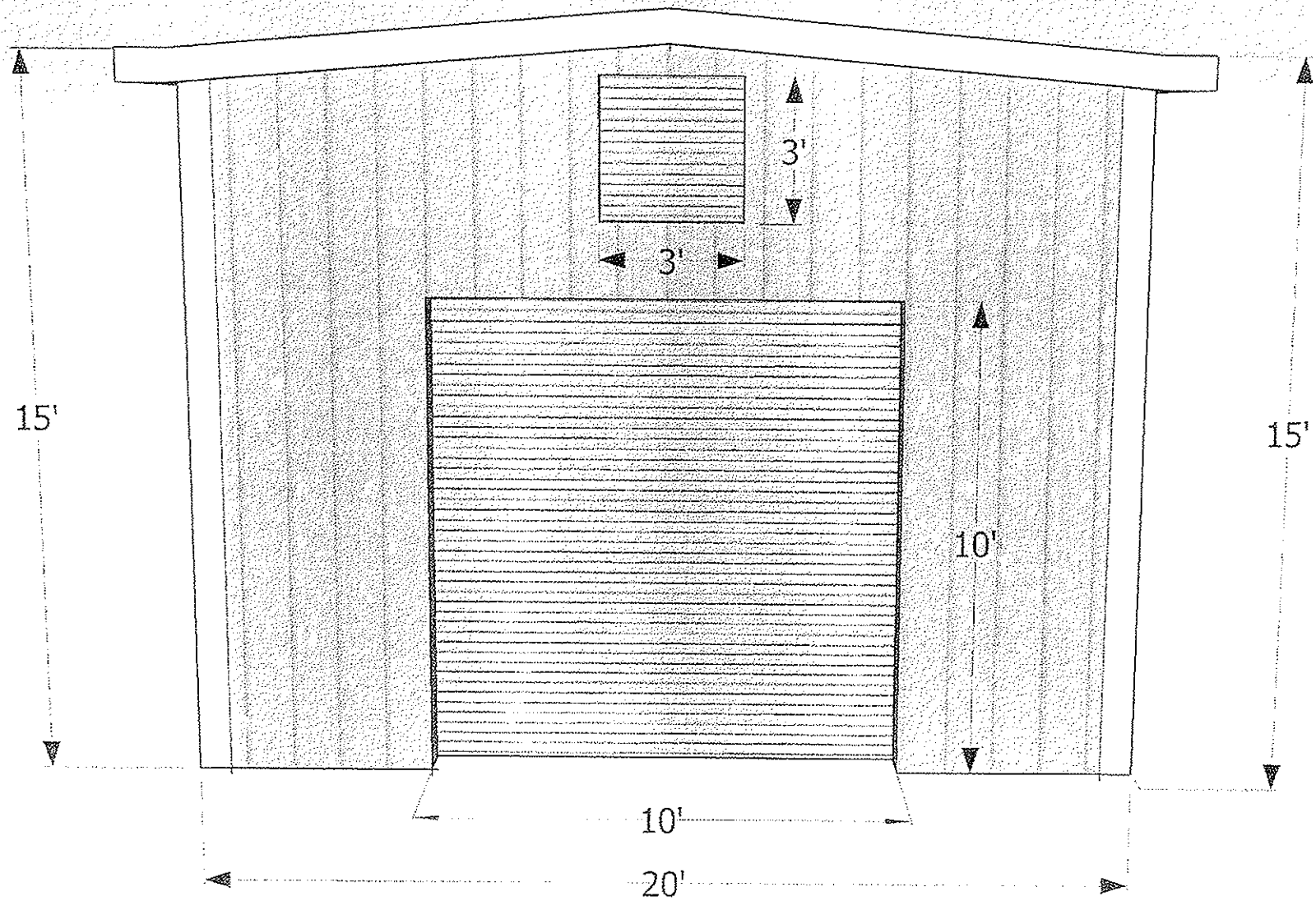

LEFT ENDWALL CONCEPTUAL SKETCH

VULCAN

STEEL STRUCTURES, INC.

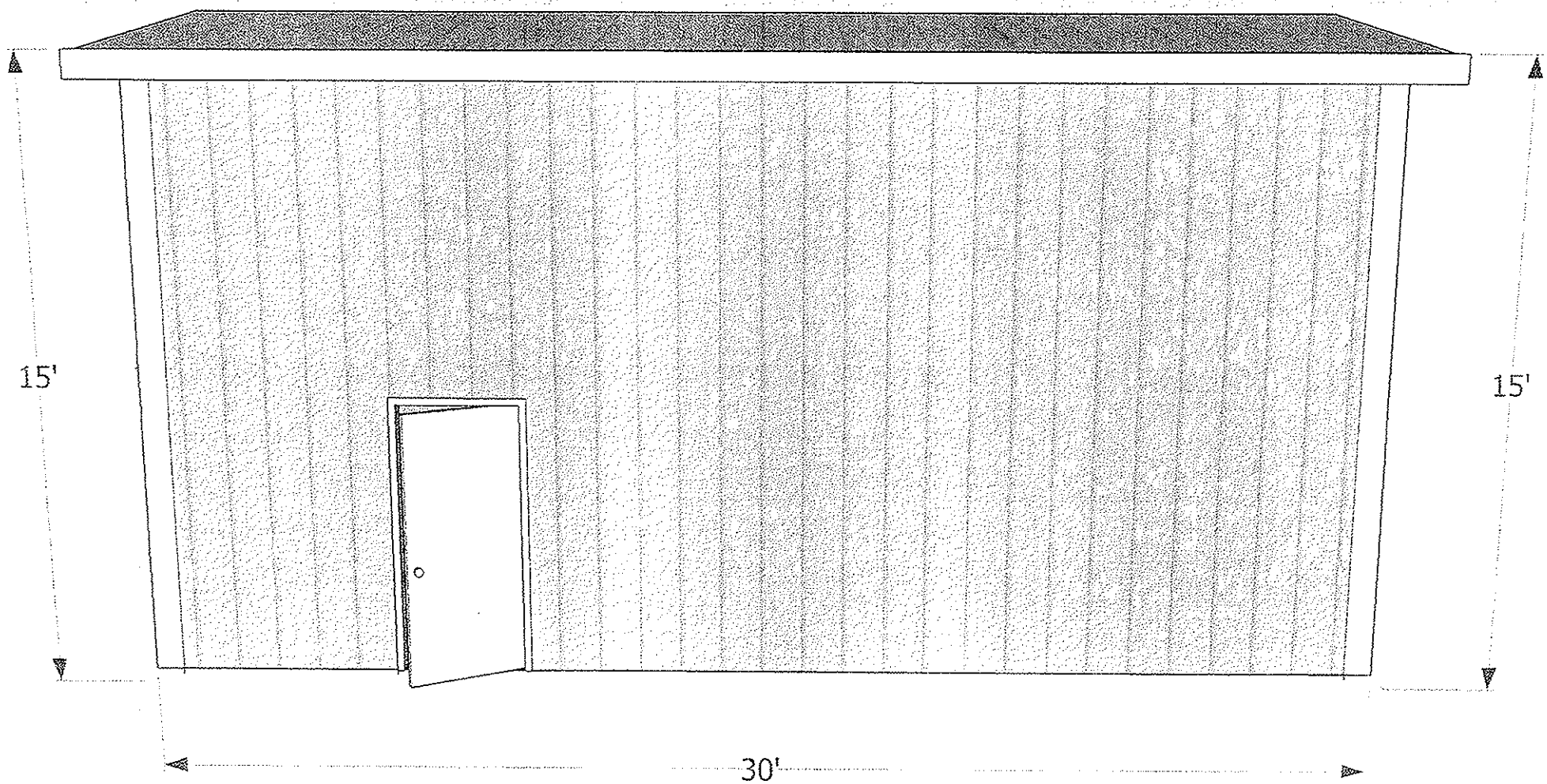

FRONT SIDEWALL CONCEPTUAL SKETCH

VULCAN

STEEL STRUCTURES, INC.

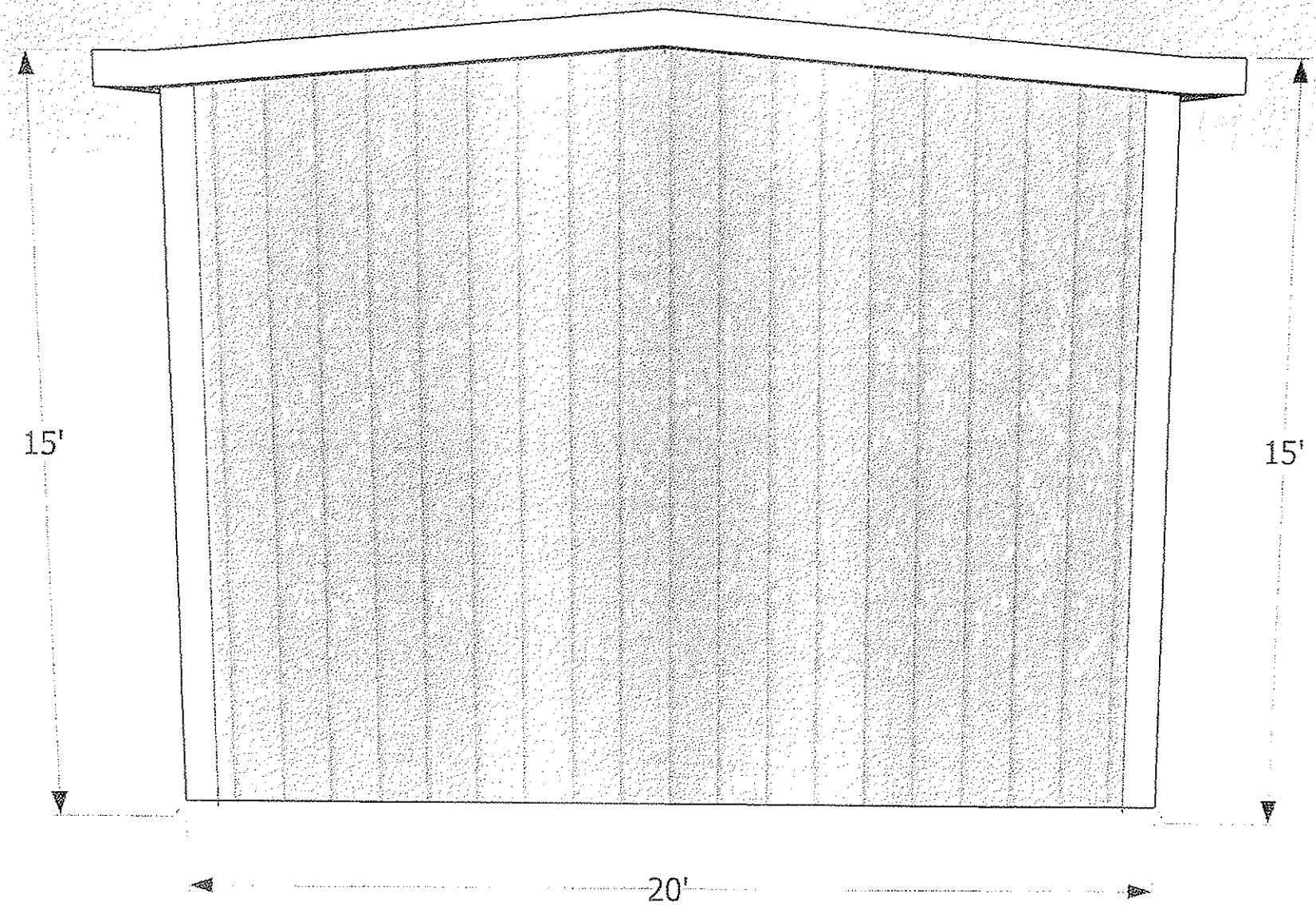

RIGHT ENDWALL CONCEPTUAL SKETCH

VULCAN

STEEL STRUCTURES, INC.

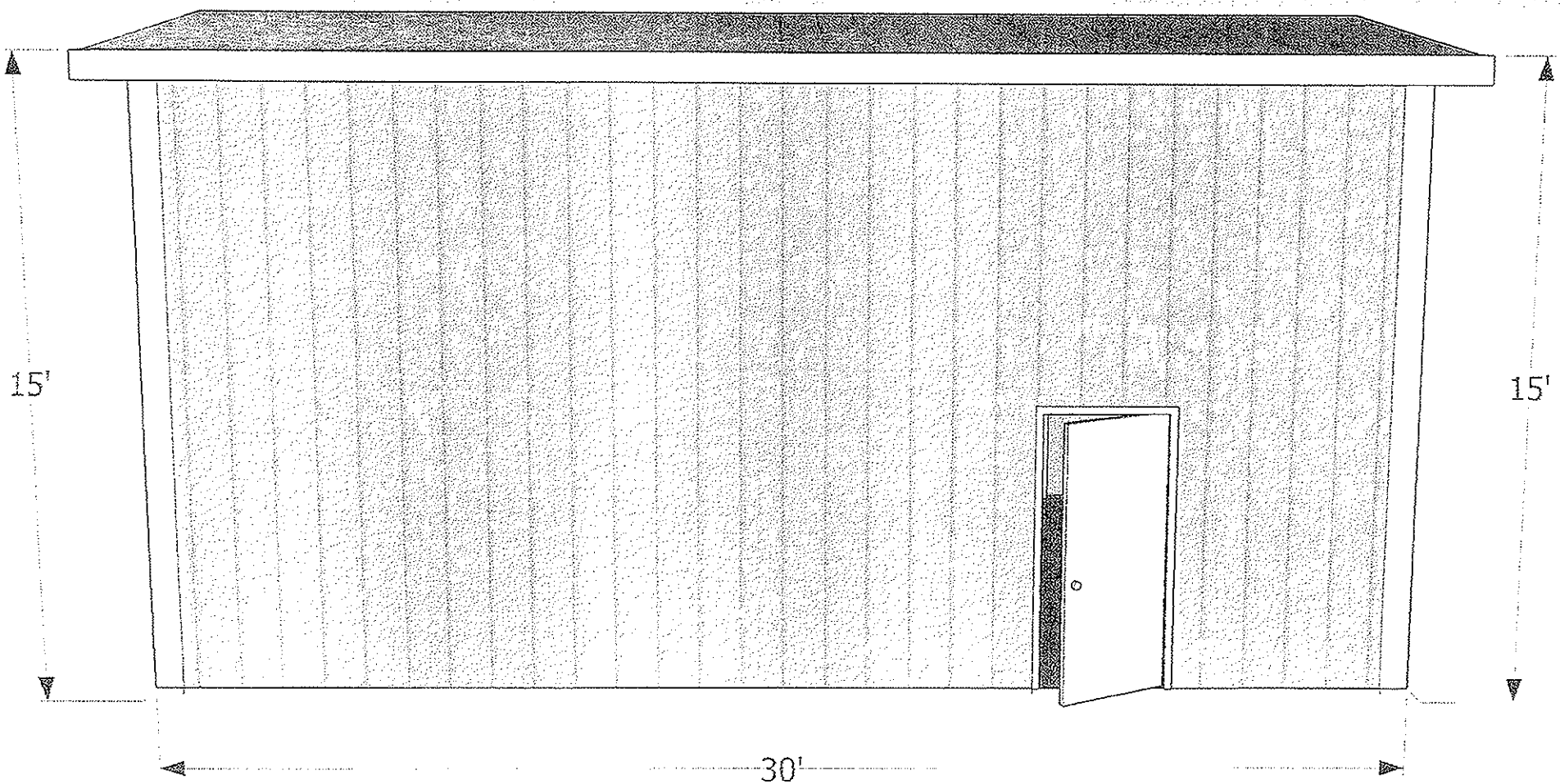

BACK SIDEWALL CONCEPTUAL SKETCH

* FOR MAIN CONDENSATE LIFT STATION

GRUNDFOS®

Redi-Flo4 Environmental Submersible Pumps

10E

Submittal Data 3450 RPM 60 Hertz

JOB or CUSTOMER:	
ENGINEER:	
CONTRACTOR:	
SUBMITTED BY:	DATE:
APPROVED BY:	DATE:
ORDER NO:	DATE:
SPECIFICATION REF:	

QUANTITY	TAG NO.	MODEL NO.	GPM	FEET	VOLT	PHASE	COMMENTS

Dimensions

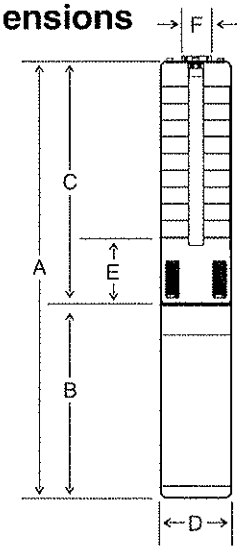

Technical Data

FLOW RANGE: 5 to 14 U.S. GPM

MOTORS: Grundfos MS402E Environmental Submersible Motor (Standard)
Maximum Operating Temperature: 104°F (40°C)
Maximum Submergence Pressure: 220 PSI
Maximum Number of Starts Per Hour: 100
Minimum Recommended Flow Past Motor: 0.25 ft./sec.

(NOTE: Franklin Pollution Recovery motor is optional.)

DISCHARGE SIZE: 1 ¼" NPT

MATERIALS OF CONSTRUCTION: See reverse side.

INSTALLATION: Unit to be installed vertically for submerged operation.

Electrical Data, Dimensions, and Weights †

Pump Type	Motors				DIMENSIONS IN INCHES							
	HP	SF	PH	Volts	Overall Length A	Motor Length B	Pump End Length C	Max. Dia. D	Inlet E	Disch. Pipe Size (NPT) F	Net Weight (Lbs.)†	Ship. Weight (Lbs.)†
10E5	½	1.60	1	230	21 ⅛	10 13/16	10 5/16	3 31/32	3 ¼	1 ¼	25	26
10E8	½	1.60	1	230	23 9/16	10 13/16	12 ¾	3 31/32	3 ¼	1 ¼	26	28
10E11	¾	1.50	1	230	26 9/16	11 ⅜	15 3/16	3 31/32	3 ¼	1 ¼	28	30
10E14	1	1.40	1	230	29 11/16	12	17 11/16	3 31/32	3 ¼	1 ¼	31	32
10E19	1 ½	1.30	1	230	35 ⅜	13 9/16	21 13/16	3 31/32	3 ¼	1 ¼	35	37

† Data for Grundfos MS402E motors. † Does not include motor leads.

Performance Curves

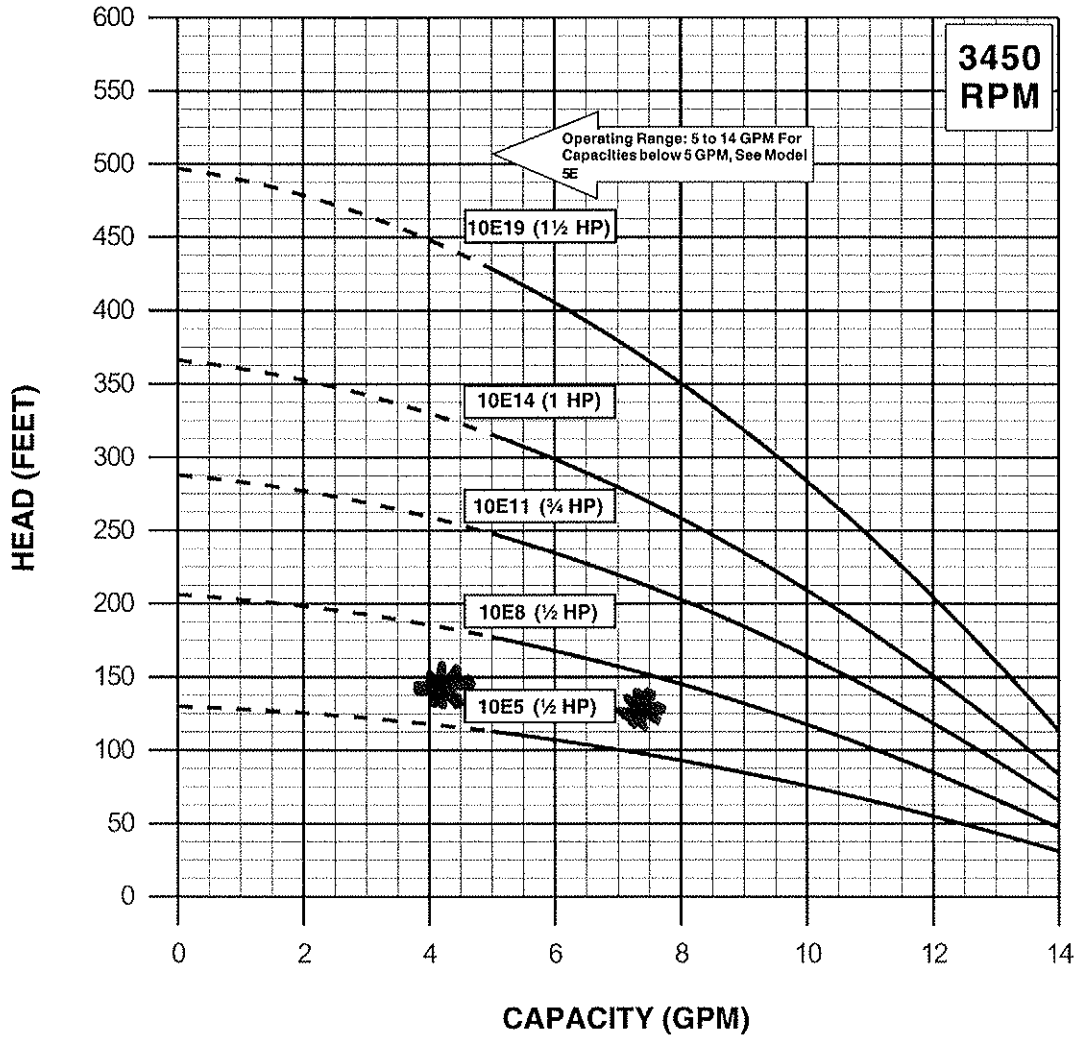

Materials of Construction

REDI-FLO4 PUMP END

Description	Material
Check Valve Housing, Check Valve, Diffuser Chamber, Impeller, Suction Interconnector, Inlet Screen, Pump Shaft, Straps, Cable Guard, Priming Inducer	304 SS
Check Valve Seat	304 SS & Teflon®
Impeller Seal Ring	Teflon®
Coupling	316/431 SS
Intermediate Bearings	Teflon®

GRUNDFOS ENVIRONMENTAL MOTOR

Description	Material
NEMA Top, Studs & Fasteners, Stator Housing, Fill Plug Screw	304 SS
Nuts	316 SS
Sand Slinger	FPM
Shaft Extension	431 SS
Diaphragm	FPM
Fill Plug Washer	Teflon®

GRUNDFOS ENVIRONMENTAL MOTOR LEADS

Description	Material
Connector Sleeve	304 SS
Connector Potting	Scotch Cast #4® Epoxy w/FPM Cap
Connector Plug	FPM
Lead Insulation	Teflon®
Conductor	Stranded Copper, 12 AWG

NOTES: Specifications are subject to change without notice.
Teflon® is a registered trademark of DuPont.
Scotch Cast #4® is a registered trademark of 3M Company.

GRUNDFOS

GRUNDFOS Pumps Corporation • 3131 N. Business Park Ave. Fresno, CA 93727
Customer Service Centers: Allentown, PA • Fresno, CA
Phone: (800)333-1366 • **Fax:** (800)333-1363
Canada: Oakville, Ontario • **Mexico:** Apodaca, N.L.

L-RF4-TL-010 | Rev. 4/01
PRINTED IN USA

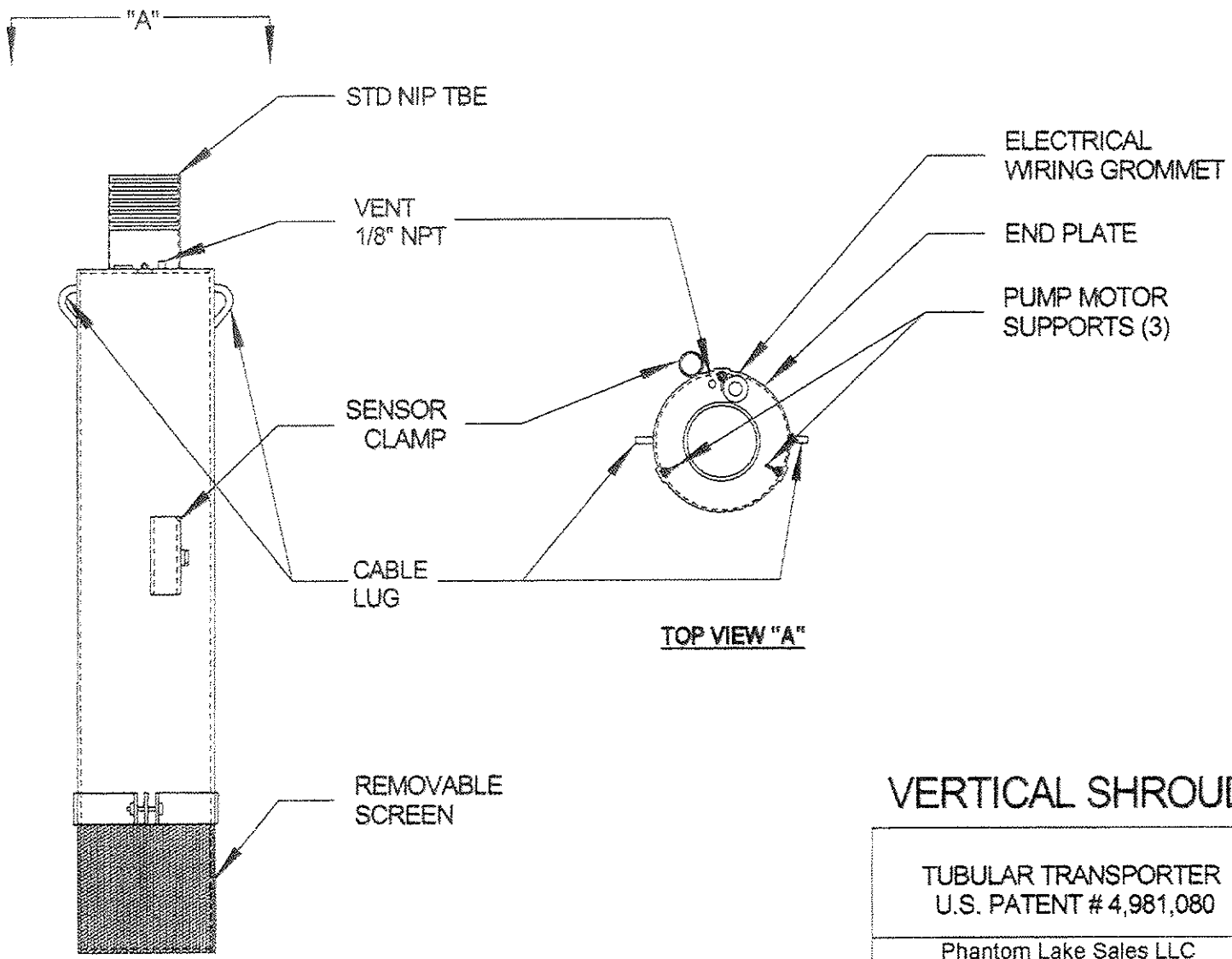

VERTICAL SHROUD

TUBULAR TRANSPORTER
U.S. PATENT # 4,981,080

Phantom Lake Sales LLC
Mukwonago, WI. 53149
Ph (262) 363-3083
Fax (262) 363-3083

DRAWN BY: J.M.E.	DATE: 7-31-06
SCALE: N.T.S.	REV:

XLPE/CPE SUBMERSIBLE PUMP CABLE

INSULATION (DIELECTRIC) MATERIAL: EXTRUDED CROSS-LINKED POLYETHYLENE
JACKET MATERIAL: EXTRUDED CPE JACKET
90°C rated

WATER AND OIL RESISTANT

LEAD ASSEMBLY SPECIFICATIONS

LEAD COMPONENT	MATERIAL
SLEEVE	316 STAINLESS STEEL
JAM NUT	316 STANILESS STEEL
BUSHING	VITON
POTTING	EPOXY(CHEMICAL RESISTANT)

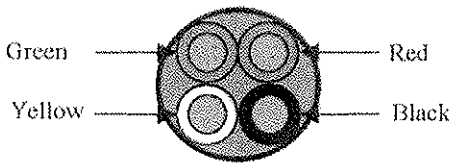

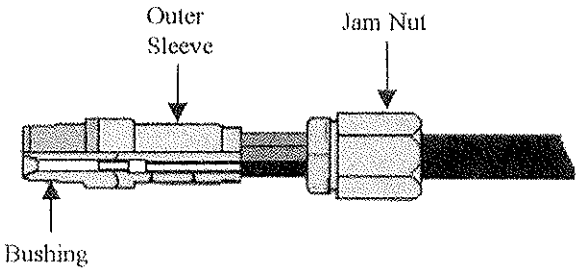

CONSTRUCTION:

CONDUCTORS: **12 AWG 19/25 tin electroplated**

INSULATION: .030" wall nom.

COLOR CODE: Black, Red, Green, and Yellow

JACKET: .045" Wall nom

FINAL O.D. .439"

PHANTOM LAKE SALES,LLC
S107 W29885 PICKERING DRIVE
MUKWONAGO, WI 53149
Phn:262-363-3083 • Fax:262-363-4692

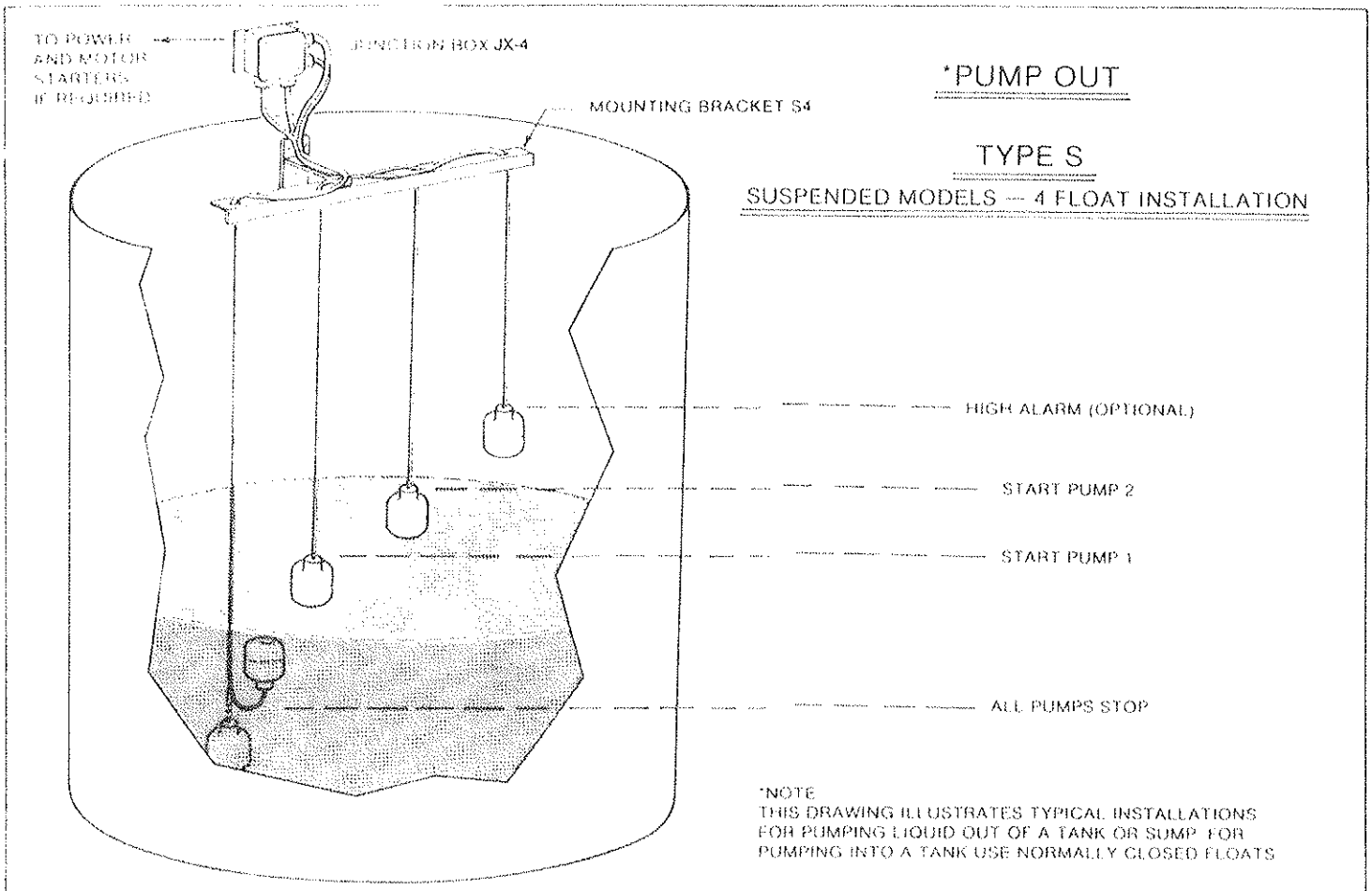

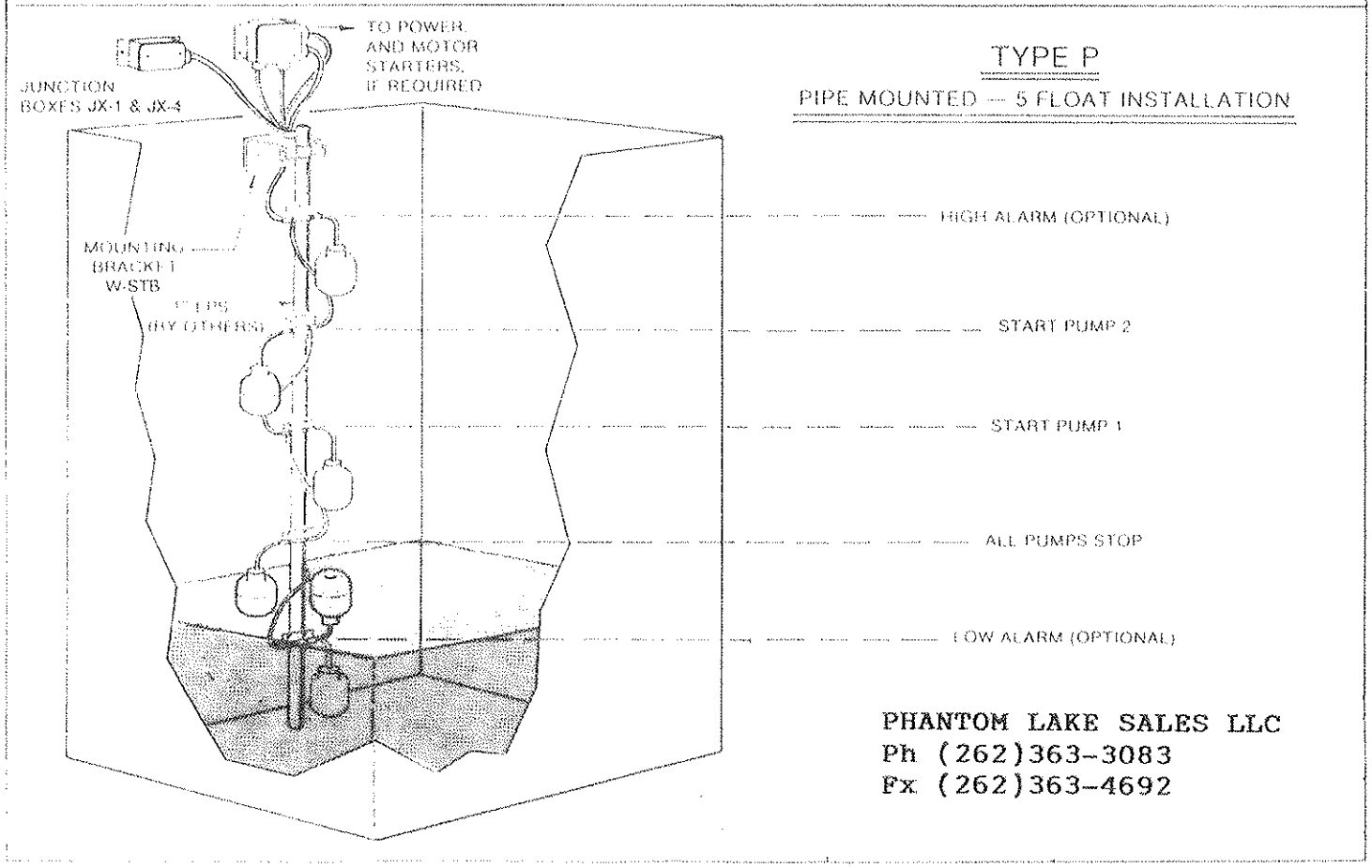

PHANTOM LAKE SALES LLC
Ph (262)363-3083
Fx (262)363-4692

PHANTOM LAKE SALES LLC
Ph (262)363-3083
Fx (262)363-4692

roto-float
Type S - Suspended
Form 2700-B

TYPE S

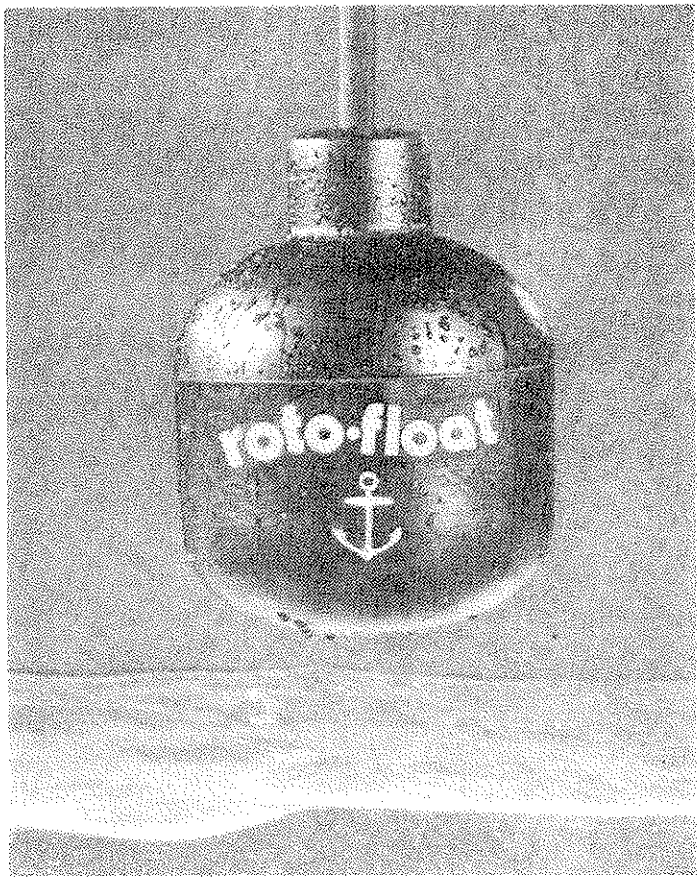

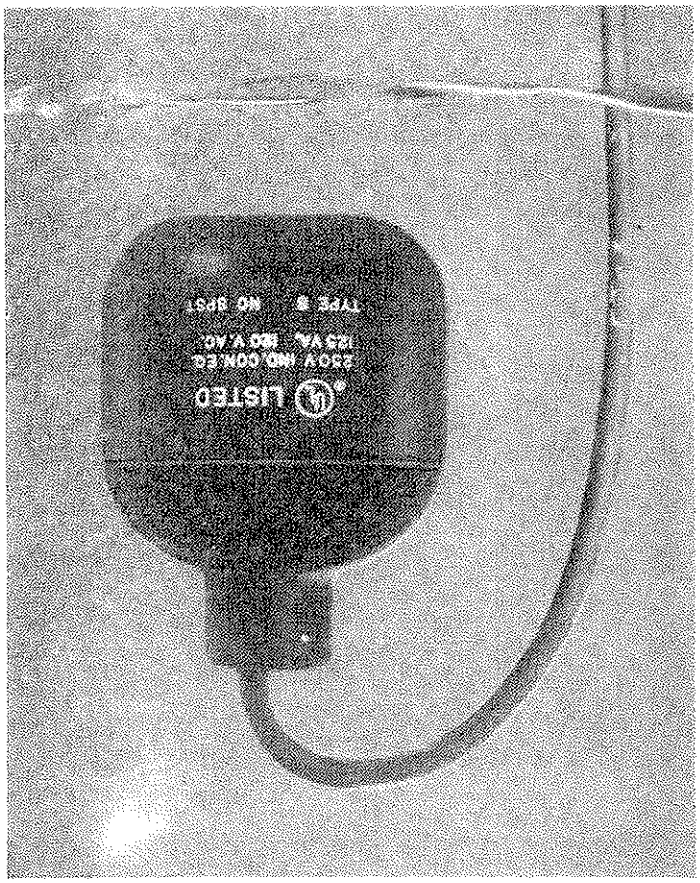

The ROTO-FLOAT is a direct acting float switch. Each ROTO-FLOAT contains a single pole mercury switch which actuates when the longitudinal axis of the float is horizontal, and deactuates when the liquid level falls 1" below the actuation elevation.

The float is a chemical resistant polypropylene casing with a firmly bonded electrical cable protruding. One end of the cable is permanently connected to the enclosed mercury switch and the entire assembly is encapsulated to form a completely water tight and impact resistant unit. Type S — Suspended has built in weight.

ROTO-FLOATS can be mounted on a support pipe (type P) or suspended from above (type S). Advantages of the ROTO-FLOAT are low cost, simplicity and reliability.

UL Listed
- Pilot Duty
- Industrial Control Equipment

CABLE

P.V.C. type STO #18 conductors (41 strand) rated 600 volts • Various lengths available • See table of models • Non-standard lengths also available on special order.

Switch Arrangement	Cable Length	Suspended Type S Model No.	Ship. Wt.
Normally Open	20	S20NO	4#
	30	S30NO	4 1/2#
	40	S40NO	5 1/4#
Normally Closed	20	S20NC	4#
	30	S30NC	4 1/2#
	40	S40NC	5 1/4#

Effective 4/93

Appendix G
Draft Spill Prevention and Countermeasures Plan

Submitted to the City of Durham for review 3-26-09

RMT

• ENVIRONMENT • ENERGY • ENGINEERING

Spill Prevention and Countermeasure Plan (SPCMP)

Landfill Gas-to-Energy System Project
City of Durham Sanitary Landfill

March 2009

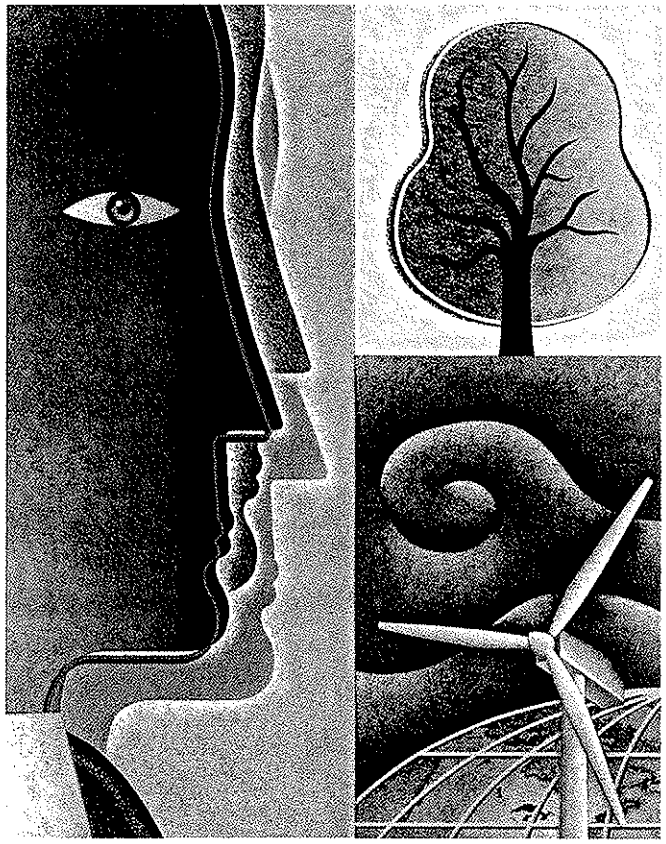

CREATING BALANCE™

RMT

• ENVIRONMENT • ENERGY • ENGINEERING

Spill Prevention and Countermeasure Plan (SPCMP)

Landfill Gas-to-Energy System Project
City of Durham Sanitary Landfill

March 2009

NORTH CAROLINA PROFESSIONAL SEAL 17543 ENGINEER R. KENT NILSSON 3/3/09

Dean R. Free
Project Consultant

Kent Nilsson, P.E.
Project Engineer

© 2009 RMT, Inc.
All Rights Reserved

744 Heartland Trail • Madison, WI 53717 • 608.831.4444 • 608.831.3334 FAX • www.rmtinc.com

CREATING BALANCE™

Table of Contents

1. Introduction 1
   - 1.1 Purpose 1
   - 1.2 Scope 1

2. Project Information 3

3. Potential Pollutant Sources 6
   - 3.1 Identification of Potential Pollutants 6
   - 3.2 LFGTE System Components 6
     - 3.2.1 Landfill Gas Condensate Handling 6
     - 3.2.2 Landfill Gas Blower Skid System 7
     - 3.2.3 Chiller Skid System 7
     - 3.2.4 Jenbacher Engine Gensets 7
     - 3.2.5 Transformers 8
   - 3.3 Evaluation of Potential Spill Sources 8
     - 3.3.1 Landfill Gas Blower Skid System 8
     - 3.3.2 Chiller Skid System 9
     - 3.3.3 Jenbacher Engine Gensets 9
     - 3.3.4 Transformers 10
     - 3.3.5 O&M Vehicles 10

4. Site-specific Best Management Practices 11
   - 4.1 Good Housekeeping 11
   - 4.2 Inspections and Preventive Maintenance 11
   - 4.3 Spill Cleanup Materials 12
   - 4.4 Storm Water and Runoff Management 12

5. Spill Response Procedures 13

6. Spill Notifications and Records Requirements 15

List of Figures

Figure 1 Site Location Map

Figure 2 Site Layout, Material Storage, and Facility Drainage Map

List of Attachments

Attachment 1	*Article V – Storm Water Management and Pollution Control,* City of Durham Ordinances
Attachment 2	City-County Planning Department – Supplementary Requirements 7.40 Service Stations and Vehicle Repair Shops
Attachment 3	Pollution Prevention for Service Stations and Vehicle Repair Shops
Attachment 4	Blower Skid System and Chiller Skid System
Attachment 5	Example Jenbacher Genset Photographs
Attachment 6	Spill Notification and Project Contact Information and Spill Recording Form
Attachment 7	Article 21A, Oil Pollution and Hazardous Substances Control Act of 1978 (State of North Carolina)

Section 1
Introduction

1.1 Purpose

This Spill Prevention and Counter Measures Plan (SPCMP) has been prepared for the proposed City of Durham Sanitary Landfill, Landfill Gas-to-Energy (LFGTE) System project located at 1900 East Club Boulevard in the city of Durham, North Carolina (City). This SPCMP was prepared to comply with the applicable requirements specified in the following:

- Division 2. Prohibitions and requirements, including *Article V – Storm water Management and Pollution Control, City of Durham Ordinances, Sec. 70-515 – "pollution prevention requirements for automotive activities"* (Attachment 1) {This section was verbally identified by the City Storm Water Services Division as being representative of the proposed project activities.}
- *Supplementary requirements, City-County Planning Department, "7.40-Service Stations and Vehicle Repair Shops", item no. 11* (Attachment 2).
- "Pollution Prevention for Service Stations and Vehicle Repair Shops" (guidance document), provided by the City Storm water Services Division (Attachment 3).

This LFGTE project claims exemption from the spill prevention, control, and countermeasures requirements of Chapter 40, Code of Federal Regulations, Section 112 (40 CFR 112) for the following reasons:

- The completely buried oil storage capacity of the facility is 42,000 gallons or less (this project has no below-grade oil storage facilities).
- The aggregate aboveground oil storage capacity of the facility is 1,320 gallons or less.

This project also claims exemption from the National Pollutant Discharge Elimination System (NPDES) requirements of the State of North Carolina because the project footprint is less than 1 acre. The project is anticipated to disturb less than ½ acre of land.

1.2 Scope

The scope of the SPCMP is as follows:

1. Provide project information that identifies key project participants, project details, and key activities with the potential to impact storm water.
2. Identify and evaluate the potential pollutants associated with the project that may impact storm water quality at the facility.

3. Select site-specific Best Management Practices (BMPs) to reduce or prevent pollutants, resulting from site activities, from impacting storm water and authorized non–storm water discharges; and identify the recommended countermeasures (cleanup materials) to be maintained on-site for use in addressing spills and other identified exposed materials.
4. Develop spill response procedures to address spills, and other identified exposed materials, to reduce or prevent impacting storm water and authorized non–storm water discharges.
5. Provide a site map that includes the following:
   - Project facility location and boundaries
   - Property boundaries
   - Storm water drainage paths in and around the project facility boundaries
   - Storm water discharge points and any structural storm water controls that affect storm water discharges
   - Locations of authorized non–storm water discharges
   - Areas impacted by runon from adjacent properties
   - Nearby water bodies
   - Impervious areas of the project facility, including paved and unpaved driving and parking surfaces, buildings, covered storage areas, or other roofed structures
   - Activity areas, including locations of material usage and storage, maintenance areas, material handling and processing areas, waste treatment and disposal areas, cleaning and rinsing areas, and other areas that include activities with a potential to impact storm water
   - Areas with the potential for soil erosion

Section 2
Project Information

Facility name:	Landfill Gas-To-Energy (LFGTE) Project, City of Durham Sanitary Landfill
Street address:	1900 East Club Boulevard LFG Blower/Flare Station and LFGTE System Durham, NC 27704
Landfill owner	Contact: Nancy Newell City of Durham - Department of Water Management (919) 560-4381 extension 254
Project owner:	Contact: Mr. Leon LeBlanc Vice President of Operations MP Durham, LLC (207) 604-6964
Project location:	The landfill is located on the northeastern side of the city of Durham, North Carolina, west of I-85 and north of East Club Boulevard. Figure 1 shows the project location.
Project description:	The project facility will include three Jenbacher engine generator sets that are fueled by conditioned LFG from the Durham Sanitary Landfill. Figure 2 shows the site layout and material storage areas.
Potential project storm water pollutants:	The potential project storm water pollutants include engine oil (both new and used), ethylene glycol (coolant), transformer oil (mineral oil), and general lubricating oil and grease.

Fixed material storage:

- Engine oil: Total of 800 gallons of capacity within the three engine gensets and oil pans; a total of 2,400 gallons within the sub-engine storage reservoir systems. The LFG blower and chiller system use minor amounts of lubrication oil (less than 100 gallons total) and grease.

- Mineral transformer oil: The four project transformers use mineral oil internally. The mineral oil is permanently installed within each transformer, and handling is not anticipated.

- Ethylene glycol (coolant): The chiller system uses ethylene glycol to reduce the dew point of the LFG as part of an enclosed liquid-to-gas heat exchanger system. These systems do not include any built-in storage tank systems. The three engine gensets utilize an ethylene glycol and water mixture in their radiator systems to cool the engines. There are no built-in ethylene glycol storage systems for the gensets.

Portable material storage:

- Oil trucks will haul away used engine oil and supply new engine oil to the genset storage reservoirs located beneath each genset unit. Ethylene glycol will be supplied to the site in 55-gallon drums or similar containers. Spare drums of ethylene glycol will be stored indoors at the site for use during operation and maintenance activities.

Total material storage:

- Engine oil: A total of 3,300 gallons of oil on-site (inside genset engines, inside genset oil storage reservoirs, and within contained parts of the LFG blower and chiller systems). Transformer mineral oil quantities are not included in these totals.

- Ethylene glycol: The total quantity of ethylene glycol solution in each engine genset is approximately 200 gallons at approximately 63% water. The amount of ethylene glycol solution in the chiller system is approximately 200 gallons, at approximately 50% water.

Storm water pathways:	Refer to Figure 2 for the facility drainage details.
On-site treatment:	No on-site treatment is performed.
On-site vehicles:	Vehicles used on-site include those for routine operation and maintenance personnel and activities (typically automobiles and small trucks); infrequent vehicle visits include used and new oil hauling trucks, electrical line trucks, and larger maintenance trucks.
Authorized non–storm water discharges:	The project site includes one proposed potable water yard hydrant for O&M personnel to supply water to the engine genset radiators and for general use. Unused potable water will be discharged to the surface. Water and coolant removed from radiators will be properly disposed.

Section 3
Potential Pollutant Sources

3.1 Identification of Potential Pollutants

The following project materials have been identified as potential storm water pollutants at the facility:

- New and used engine oil
- Ethylene glycol coolant, and coolant/water mixtures
- Transformer mineral oil
- Various small quantities of lubricating oil and grease
- LFG condensate

The two primary contaminants that may potentially impact storm water at the LFGTE project facility include new and used engine oil and coolant/water mixtures used in the engines and chiller. The ethylene glycol coolant/water mixture may range from 30 percent to 100 percent ethylene glycol.

3.2 LFGTE System Components

The LFGTE system project is being designed and installed to take available LFG from the closed City of Durham Municipal Solid Waste Landfill and convert it to electricity. A combination of blower systems will pull the LFG from the landfill and push it to the engine gensets. The LFG will be conditioned before it is distributed to three Jenbacher engine gensets. The LFG conditioning system includes particulate filters and a chiller system designed to reduce the moisture content of the LFG. The gensets will use the LFG as fuel in order to turn electrical generators, generate electricity, and feed it onto the Duke Energy electrical grid system. In the event that all of the available LFG is not combusted in the engines, a back-up utility flare will combust the remaining LFG.

3.2.1 Landfill Gas Condensate Handling

Moisture that is removed during the LFG conditioning process, known as LFG condensate, will be directed by small gravity pipes and small pumping systems to an existing buried condensate tank. The existing condensate tank is located adjacent to the existing blower/flare station and it currently accepts LFG condensate generated by the existing landfill gas collection system. Refer to attached Figure 2 for a site plan showing

the existing and proposed LFG equipment. The existing condensate holding tank will be converted into a condensate lift station. A float-controlled duplex pumping system will be installed to transfer the accumulated condensate to a nearby sanitary sewer manhole. From there, the condensate will flow to the sanitary wastewater treatment plant for disposal.

3.2.2 Landfill Gas Blower Skid System

The proposed landfill gas blower skid will be installed on a concrete pad. The skid system will include a scrubber, a blower system, and some of the heat exchanger system components. A scrubber, which is a vessel that removes particulates and free moisture from the incoming LFG, will be included on the blower skid. The scrubber will drain condensate by gravity to the existing buried condensate holding tank. The blower system will slightly compress the LFG, decrease its dewpoint by use of the ethylene glycol chiller system, and direct it to the engine gensets. The blower skid system contains only small amounts of lubricating oil and grease.

The blower system includes a couple of LFG condensate collection and disposal points. The condensate that is removed from the system will be directed by gravity or small pumping systems by piping to the existing buried condensate holding tank. Key system components will be heat-traced and insulated to prevent freezing during cold weather. Refer to Attachment 4 for a drawing showing the blower system skid.

3.2.3 Chiller Skid System

The chiller skid system operates together with the blower skid system providing a non-contact LFG-to-liquid heat exchanger. The ethylene glycol coolant/water mixture circulates through a looped piping system from the blower skid to the chiller skid and back again. The chiller skid system is located on a concrete slab and contains only small amounts of lubricating oil and grease. The chiller skid system's primary purpose is to cool the ethylene glycol/water mixture that circulates from the blower skid to the chiller skid, and back again, to reduce the LFG temperature and moisture content. The ethylene glycol system is a self-contained system that is not impacted by precipitation. The ethylene glycol mixture is replaced approximately every 3 years. Key system components will be heat-traced and insulated to prevent freezing during cold weather. Refer to Attachment 4 for a drawing showing the chiller system skid.

3.2.4 Jenbacher Engine Gensets

The project includes three Jenbacher engine gensets that are contained within steel-sided containers that will be placed on concrete slabs. An oil reservoir system will be located

between each genset container and the base concrete slab. Each oil reservoir system is designed to hold approximately equal amounts of used engine oil and new engine oil for maintenance of the engine gensets. The oil reservoirs include dual-walled containment to protect against leaks, and the reservoirs are sheltered from precipitation.

The engine coolant is a mixture of approximately 35% to 40% ethylene and 60% to 65% water. The coolant mixture is replaced approximately 3 to 4 times per year. New coolant is supplied in 55-gallon drums or similar containers, and make-up water is supplied from the potable water source installed as part of the project. Attachment 5 includes example photographs of Jenbacher engine gensets, the design details for the oil reservoir system, and genset design details.

3.2.5 Transformers

The project includes four transformers. One provides the incoming power to the LFGTE system electrical and control building from the Duke Energy power pole. The other three transformers are associated with each engine generator set and are used to transfer the generated electricity to the Duke Energy electrical grid system.

Each transformer contains mineral oil for internal cooling and insulation. The transformer oil is not expected to require replacement, and the units are sealed and enclosed for protection from the weather in accordance with applicable electrical standards.

3.3 Evaluation of Potential Spill Sources

The potential spill sources include those activities and systems that will exist within the fenced area of the LFGTE system project facility. This SPCMP describes the potential sources of contaminants that have the potential to be exposed to precipitation within the fenced area only. The sources include the LFG blower skid system, the chiller skid system, the engine gensets, the transformers, and periodic O&M vehicles.

3.3.1 Landfill Gas Blower Skid System

The proposed LFG blower skid contains only small amounts of lubricating oil and grease. The potential spill sources are minimal and of small quantities. Small spills or leaks will typically be contained on system components, on the skid base, or on the concrete pad. The blower skid system also includes part of the ethylene glycol coolant/water mixture that circulates between it and the chiller skid. Lastly, the blower skid system includes LFG condensate collection and transfer systems. The following

potential circumstances that would allow materials from the blower skid to become exposed to precipitation may occur:

- Random oil or grease lubricant leakage
- Random coolant leakage or catastrophic coolant system component failure
- Spills during the manual removal and replacement of lubricants
- Spills during the manual removal and replacement of ethylene glycol/water mixture
- Random condensate leakage or catastrophic condensate pumping system failure

3.3.2 Chiller Skid System

The chiller skid system contains only small amounts of lubricating oil and grease. The potential spill sources are minimal and of small quantities. Small spills or leaks will be contained on system components, on the skid base, or on the concrete pad. The chiller skid system also includes part of the ethylene glycol coolant/water mixture that circulates between it and the blower skid. The following circumstances that would allow materials from the chiller skid to become exposed to precipitation may occur:

- Random oil or grease lubricant leakage
- Random coolant leakage or catastrophic coolant system component failure
- Spills during the manual removal and replacement of lubricants
- Spills during the manual removal and replacement of ethylene glycol/water mixture
- Random condensate leakage or catastrophic condensate pumping system failure

3.3.3 Jenbacher Engine Gensets

The engines are contained within a protective steel-sided container, and internal components are not exposed to the weather. The new and used oil storage reservoirs provide dual-containment for the fluids and are not exposed to precipitation, in accordance with City of Durham Ordinance No. 13342, s. 1(23-148), 11-20-2006), Sec. 70-515 (a). The entire engine genset and lower reservoirs are located on a concrete pad foundation. The following circumstances that would allow materials from the engine gensets to become exposed to precipitation may occur:

- Random engine leakage or catastrophic component failure
- Spills during the manual removal and replacement of engine oil
- Spills during the manual removal and replacement of lubricants
- Spills during the manual removal and replacement of ethylene glycol/water mixture

3.3.4 Transformers

The four transformers are contained within weatherproof containers that isolate the electrical equipment from the environment. The components and containment structures are installed on concrete pads. The following circumstances that would allow oil from the transformers to become exposed to precipitation may occur:

- A leaking transformer component or a catastrophic transformer failure, with a failure of the weatherproof container

3.3.5 O&M Vehicles

A variety of O&M vehicles may be present at the site during site inspections, operations, maintenance, and repairs. The following circumstances that would allow materials from O&M vehicles to become exposed to precipitation may occur:

- Leaking from vehicle components or catastrophic failure of a vehicle system
- Leaking from the new or used oil storage systems on the maintenance supply vehicle, or from catastrophic failure of such systems
- Leaking from the new or waste ethylene glycol containers used during maintenance activities or from similar on-vehicle storage systems of the service vehicle, including leakage or catastrophic failures
- Vehicular accidents with LFGTE system components, site structures, or other vehicles

Section 4
Site-specific Best Management Practices

Site-specific Best Management Practices (BMPs) include schedules of activities, prohibitions of practices, maintenance procedures, and other management practices to prevent or reduce the pollution in the storm water runoff from a project site. The BMPs include maintaining suitable countermeasures on-site, including spill cleanup items. The BMPs selected for this project facility are presented below.

4.1 Good Housekeeping

Good housekeeping practices are those designed to maintain a clean and orderly work environment. The following good housekeeping practices will be utilized for this project:

- Properly labeling and storing material
- Scheduling and completing routine organizational and cleanup operations
- Inspecting, evaluating, and improving O&M tasks
- Training employees and administering the approved SPCMP

4.2 Inspections and Preventive Maintenance

An inspection and preventive maintenance program will be developed and implemented for the LFGTE project. The program will include recommended manufacturer's maintenance schedules and practices, together with additional site-specific activities. These items will be included as part of the LFGTE O&M Plan that will be developed during site construction and installation efforts.

Preventive maintenance will be applicable to the facility grounds, drainage ditches, and storm water control features. The O&M Plan will be updated as necessary, and a copy will be available on-site at all times. At a minimum, the Plan will include the following:

- Inspection schedules and procedures
- Routine system checks for integrity, leaks, and spills
- Proper storage requirements for new and waste materials, including use of storage indoors, under cover, and with available spill containment systems
- Proper procedures that require the performance of O&M work over suitable surfaces and the utilization of spill prevention materials, including pans and pads
- Maintenance requirements for project records, including O&M and inspection activities

- Proper collection, storage, and disposal procedures for waste materials

4.3 Spill Cleanup Materials

Suitable cleanup materials will be maintained on-site to address needs during O&M activities. Materials will be available for routine O&M activities and for unanticipated leaks and spills to reduce or prevent storm water contamination. The site cleanup kit will be maintained within the electrical and control building, and will include, at a minimum the following:

- Safety goggles
- Gloves
- Oil dry
- Absorbent booms and pads
- Shovel, broom, and waste pan
- Various waste disposal containers
- Labeling materials for new and used spill materials

The specific contents of the spill cleanup kit will be listed within the O&M Plan that will be prepared during project installation.

4.4 Storm Water and Runoff Management

Currently, storm water that falls onto the existing City of Durham LFG blower/flare facility flows to perimeter drainage ditches, or sheet-flows to areas north and west of the existing facility. In general, the drainage patterns will not change with the construction of the proposed LFGTE system facility. The resulting LFGTE facility will take up a slightly larger footprint by extending the existing facility boundaries to the north and to the west. The entire LFGTE system facility will be fenced with access gates at specific locations. Refer to attached Figure 2 for the plan view of the proposed LFGTE facility.

The project facility is over 150 feet from the unnamed stream that is located north of the proposed project. Existing road drainage ditches, culverts, and existing drainage patterns will be maintained as part of site grading and preparatory work. Disturbed areas outside the limits of the project graveled areas will be restored with suitable vegetation. During construction activities, sediment control devices will be used to reduce the potential of sediment transport off-site by storm water. Control devices will include silt fencing, straw bale ditch check, sediment tubes, or other suitable items. Control devices will be maintained until restored vegetation is suitably developed.

Section 5
Spill Response Procedures

Spill response is required in accordance with the City of Durham Ordinance No. 13342, s. 1(23-148), 11-20-2006), Sec. 70-518. The spill response procedures developed for the project are detailed below. The procedures will be come part of the O&M Plan and will be posted on-site within the electrical and control building.

1. *Notify the Project Emergency Response Coordinator.* The O&M person discovering a leak or spill will immediately notify the project's Project Emergency Response Coordinator (PERC). The PERC, or designee, will be on-call and available to on-site staff. The PERC will contact the Facility Manager, or designee, based on the severity of the leak or spill. Spill notification and project contact information is provided for the Pollution Prevention Team in Attachment 6.

2. *Stay clear of the spill.* Personnel who are not directly involved with the spill shall stay away from the leak or spill.

3. *Assess the spill.* The PERC, or designee, will first assess the nature and extent of the spill and the potential threat to human life or the environment, and make a determination regarding the steps required to safeguard personnel (e.g., evacuation, personal protective equipment, etc.).

   - As necessary, the PERC will evacuate personnel, notify local authorities, advise if area control or evacuation is recommended, activate emergency response personnel and equipment, and enlist outside emergency services as necessary.

   - The PERC will determine the exact source and the amount of the release, and determine the need for notification of authorities and regulatory agencies.

4. *Stop the spill.* After implementing the required safety-related measures, the PERC will authorize immediate action to prevent further releases to the extent possible by cutting off the flow at the source.

5. *Contain the spill.* Immediately after determining what safety precautions and containment equipment are appropriate, the PERC will authorize immediate containment procedures to stop or to reduce migration of the spill. Efforts will include the management of contaminants that may have migrated beyond the project facility fence boundary.

6. *Clean up spill.* To the extent practicable, spilled material will be retrieved and stored in leak-proof containers until the materials can be disposed of properly. A spill kit will be available on-site. If a large spill occurred (more than what can be cleaned up with the typical spill kit materials), additional materials will be procured and utilized and/or a clean-up contractor will be contacted to provide additional equipment as determine necessary.

7. **Dispose of contaminated material.** The PERC will direct the collection of the contaminated material (including both spilled material and cleanup media) and have the material disposed of in accordance with applicable regulations. The exact means of disposal will depend upon the nature and volume of the contaminated material.
8. **Record the spill event information.** The PERC will record leak and spill details as applicable. A copy of the blank form for recording spill information is in Attachment 6 of this SPCMP, which will be part of the final site O&M Plan. Completed spill event forms will be maintained on-site in the electrical and control building.
9. **Update the SPCMP.** The Facility Manager and other employees involved with the project will periodically review leak and spill records and will implement measures to prevent repeat occurrences and to improve response measures.
10. **Replace used countermeasures.** Following a leak or spill cleanup, the Facility Manager, or designee, will assess the inventory of response equipment and restock the spill kit as necessary.
11. **Submit required reports.** The Facility Manager will prepare required follow-up written reports to the appropriate regulatory agencies, in accordance with applicable reporting requirements. Copies of site reports will be maintained on-site in the electrical and control building.

Section 6
Spill Notifications and Records Requirements

The City of Durham Storm water Management and Pollution Control Ordinance (attached for reference in Attachment 1) indicates in Sec. 70-515 that a spill shall be contained immediately upon discovery and that such spill shall be reported. Reporting shall be performed within one working day and includes notification of the following:

City of Durham – Department of Water Management
Storm water Services Division
Third Floor City Daniel W. Hall
Senior Client Executive
101 City Hall Plaza
(919) 560-4326
M-F 8:00 a.m. through 4:30 p.m.

In accordance with North Carolina Oil Pollution and Hazardous Substances Control Act, Article 21A, Part 2, Sec. 143-215.84 (b) (attached for reference in Attachment 7), the reportable criteria used for this LFGTE project facility will be as follows:

- Notification will be performed if the quantity of oil, or ethylene glycol, that is spilled is 25 gallons or more.
- Notification will be performed if an oil sheen is produced on the nearby creek.
- Notification will be performed if a spill takes place and extends to within 100 feet of the creek.
- Notification will be performed if a spill of less than 25 gallons cannot be effectively cleaned up within 24 hours of being identified.

Spill records will be maintained for the duration of the project on-site, in the electrical and control building as discussed previously.

Attachment 1
Article V – Storm Water Management and Pollution Control, City of Durham Ordinances

ARTICLE V. STORMWATER MANAGEMENT AND POLLUTION CONTROL

DIVISION 1. GENERALLY

Sec. 70-492. Purpose.

The purpose of this article is to further the health, safety and general welfare and convenience of the public through:

(1)Regulating the use, placement, storage, and management of pollutants in order to prevent pollution of stormwater;

(2)Limiting pollution of stormwater in the public and private drainage system so as to limit pollution of the waters of the state and restore, protect, and maintain better water quality and the benefits that come from better water quality;

(3)Prohibiting illicit discharges and illicit connections to the public and private drainage system that increase pollution;

(4)Protecting the conveyance capacity of the drainage system by controlling blockages, and the emission or disposal of substances or effluents, including sediment, that are injurious to the drainage system;

(5)Complying with the city's National Pollutant Discharge Elimination System permit issued under the authority of section 402(p) of the clean water act and implementing regulations at 40 CFR 122.26;

(6)Establishing inspection, surveillance, monitoring, and enforcement and penalty procedures to the maximum extent authorized under law to achieve the above-described objectives, and to ensure compliance with this article; and

(7)Authorizing fees necessary to conduct inspections and monitoring of the stormwater system.

(Ord. No. 13342, § 1(23-140), 11-20-2006)

Sec. 70-493. Definitions.

(a)The acronyms used herein are:

TABLE INSET:

BMP	Best Management Practice
NPDES	National Pollutant Discharge Elimination System
MS4	Municipal Separate Storm Sewer System
NCDENR	North Carolina Department of Environment and Natural Resources
NOI	Notice of Intent
SWPPP	Stormwater Pollution Prevention Plan
USEPA	United States Environmental Protection Agency

(b)In this article, the following terms and phrases shall be defined as indicated unless the surrounding context indicates such definition is clearly erroneous. The definitions shall apply whether the term is used in the singular or in the plural, and whether or not the term is capitalized.

Best management practice (BMP) means government-approved controls, including both nonstructural and structural measures that are designed to reduce the flow of stormwater runoff, or to reduce the amount or concentration of pollutants that enter stormwater and/or the drainage system. Examples of nonstructural BMPs include inspections for leaks and spills, general maintenance and good house keeping practices to prevent pollution, education, and on-site maintenance of a spill cleanup kit. Examples of

1/16

Nonstormwater discharge means any discharge to or pollution of the drainage system that is not entirely from a form of natural precipitation.

Notice of intent or NOI means the notice of intent that is required by the NPDES stormwater multisector general permit issued by USEPA, or the notice of intent required by an NPDES general permit issued by the NCDENR.

Person means any individual, partnership, co-partnership, LLC, firm, company, corporation, unincorporated association, organization, joint stock company, trust, estate, institution, governmental entity or any other entity that owns a property, conducts a business, or controls management or activities.

Pollutant means a substance that alters the chemical, physical, biological, thermal, or radiological integrity of water in a manner that may cause or contribute to the impairment of waters of the state based on the water quality classifications assigned under 15A NCAC 2B.0300. Pollutants include, but are not limited to: paints, varnishes, and solvents; gasoline and other petroleum fuels; oil and other automotive fluids; detergents; food waste, including cooking oil and grease; nonhazardous liquid and solid wastes and yard wastes; refuse, rubbish, garbage, litter, or other discarded or abandoned objects, floatables; insecticides, fungicides, herbicides and other pesticides; fertilizers; soot, slag, and ash; hazardous substances and wastes; inadequately treated sewage, animal wastes, fecal coliform, Escheria coli and pathogens; dissolved and particulate metals; hot water; wastes and residues that result from constructing a building or structure (including, but not limited to, sediments, slurries, and concrete rinsates); eroded soils, sediments and particulate matter; and noxious or offensive matter of any kind.

Pollution and polluted means containing pollutants.

Repeat violation means a violation occurring on the same property, or a violation by a person that has committed a previous violation, or by an entity in which a previous person who has committed a violation is part owner or in partial control. A violation for the purposes of determining a repeat violation includes, but is not limited to, violations in which the violator has been notified of the violation by any governmental entity, whether or not any action, remedy, or penalty has occurred as the result of such violation.

Responsible means having direct or indirect control over the occurrence of an action, incident, or condition. Responsibility includes the ability to control what occurs on property through ownership of property, or through ownership, control, or management of a business, organization, or other entity whose activities occur on property and cause in part or in whole the action, incident, or condition. Causation may be through deliberate action or through negligence, omission, or inattention.

Stormwater means any surface flow, runoff, and drainage consisting entirely of water from any form of precipitation, and resulting from such precipitation.

Stormwater pollution prevention plan or SWPPP means a government-approved plan identifying actual or potential pollutants that could enter the drainage system at a site, and which describes the best management practices that will be employed to reduce pollutant discharges to the drainage system.

Wastewater means any water or other liquid, other than uncontaminated stormwater, discharged from a facility after use. Examples include water used for washing, flushing, cleaning, or in a manufacturing process.

Watercourse means the open channel and open water components of the drainage system and includes lakes, ponds, rivers, perennial and intermittent streams, connected

(c)Removal; grace period. Illicit connections that were legal prior to passage of the ordinance from which this article is derived may continue to exist until June 1, 2007, at which point they must be removed. However, where the connection has the potential to discharge hazardous substances, the connection shall be removed immediately unless an extension is granted. The director may allow an extension of up to three months for removal of such illicit connection upon a showing of substantial hardship and minimal risk to the public from the delay.

(Ord. No. 13342, § 1(23-143), 11-20-2006)

Sec. 70-513. Authorized nonstormwater discharges.

The following discharges are not considered illicit discharges prohibited under this article:

(1)NPDES authorized. Discharges specifically authorized from a property by an NPDES individual or general permit, a discharge waiver, or a waste discharge order, provided that the discharger demonstrates full compliance with all requirements of the permit, waiver, or order in accordance with section 70-514.

(2)Flushing. Discharges of treated potable water used to flush and clean-up a sewage spill where sewage and flush water are collected and returned to the sanitary sewer system, and discharges from water line flushing that have been dechlorinated.

(3)Emergency firefighting or spill removal. Discharges from emergency firefighting activities, or emergency remediation of a spill of a hazardous substances authorized by a federal, state, or local government on-scene coordinator, and other discharges specifically allowed in writing by the director as necessary to protect public health and safety.

(4)Dye testing. Dye testing using suitable dyes, if verbal notification is given to the director prior to the test.

(5)Specific listed activities. Certain conditionally exempt discharges listed in this subsection, provided they are not found to be significant contributors of pollutants. The director may determine in writing that any such discharge from any property is no longer exempt if there is evidence of significant pollution from such discharge.

a. Water line flushing;
b. Landscape irrigation;
c. Diverted stream flows;
d. Rising groundwaters;
e. Groundwater infiltration;
f. Uncontaminated pumped groundwater;
g. Discharges from potable water sources;
h. Foundation drains;
i. Air conditioning condensate (commercial/residential);
j. Irrigation waters (does not include reclaimed water as described in 15A NCAC 2H .0200);
k. Springs;
l. Water from crawl space pumps;
m. Footing drains;
n. Lawn watering;
o. Residential and charity car washing;
p. Flows from riparian habitats and wetlands;
q. Dechlorinated swimming pool discharges;

(b)Auto towing, maintenance, service, salvage. Properties that are used for storage of towed vehicles, vehicle maintenance, vehicle service, or salvage of vehicle parts from vehicles shall have:

(1)One or more spill clean-up kits of a type and size to meet guidelines;

(2)Secondary containment and a covered storage area for substances covered under subsection (a) of this section;

(3)Covered bays in which all vehicle service or maintenance shall be conducted, except for emergency road service, glass repair, and electrical service, such as battery replacement; and

(4)Storage for vehicle parts, both new and used, so that the parts are not exposed to stormwater runoff or precipitation.

(c) Spills/leaks. Persons responsible for property where a spill or leak of automotive or petroleum products has occurred shall clean up the spill or leak and report it in accordance with section 70-511(b).

(d)NPDES permit. Demonstration under section 70-514 of compliance with a valid NPDES permit that specifically addresses an activity controlled under this section, and imposes different requirements than those stated in this section, shall be deemed compliance with this section.

(Ord. No. 13342, § 1(23-146), 11-20-2006)

Sec. 70-516. Stormwater pollution prevention plans (SWPPPs) for storage of salvaged vehicles.

(a) Submission of SWPPP. Storage of ten or more junked, salvaged, or unlicensed vehicles (hereafter "salvage vehicles") outside, such that they are exposed to precipitation, shall require an SWPPP if the facility does not possess an NPDES permit for such activity. The SWPPP shall be developed and submitted to the director in accordance with the schedule below.

(1)By September 1, 2007, for facilities with 30 or more salvage vehicles; or

(2)By February 1, 2008, for facilities with more than ten but less than 30 salvage vehicles.

(b)Content of SWPPP. The SWPPP shall be in compliance with guidelines and shall prevent the discharge of used motor oil and other petroleum products, antifreeze, solvents, other automotive fluids, brake dust, sediment from land disturbance, and other pollutants. The SWPPP shall include the following and such other information as may be required in guidelines:

(1)A map showing the general location of the facility, and a separate site map, drawn to scale, showing location of structures, drainage features on the property, salvage autos, and vehicle parts and equipment cleaning areas;

(2)A description of storage practices, loading and unloading activities, outdoor process areas, activities that generate dust or particulates, and waste disposal practices;

(3)A list of significant spills or leaks of pollutants that have occurred at the site during the three previous years and any corrective actions taken in response;

(4)Methods, in accordance with guidelines, to reduce risk of stormwater pollution, such as secondary containment, and BMPs; and

(5)Monitoring schedule and method for documenting compliance with the SWPPP.

(c) Confidential information. City representatives shall treat as confidential information the composition of materials and substances documented during an investigation if a claim is timely made and substantiated that such substances are trade secrets.

(d) Obstruction. No person shall obstruct, hamper, or interfere with a city representative carrying out official duties. Upon presentation of credentials by city inspectors, necessary arrangements shall be made to allow immediate access onto premises or into an area protected by security measures. Any obstruction to the safe and easy access to property, a facility or enclosure on property, or to monitoring devices shall immediately be removed. Unreasonable delays in providing safe and reasonable access or removing obstructions shall be a violation of this article.

(e) Routine inspection program. The director may establish, though guidelines, a routine inspection program for properties, businesses, or other activities in order to gather information regarding stormwater, pollution of the drainage system, and compliance with this article. The inspection cycles for categories of properties, businesses, or activities may differ depending on location, proximity to particular streams or other waters of the state, prior history, type of business or activity conducted on site, size of facility, nature of substances on site, or other parameters related to the objectives of this article.

(Ord. No. 13342, § 1(23-150), 11-20-2006)

Secs. 70-526--70-530. Reserved.

DIVISION 4. DRAINAGE SYSTEM MAINTENANCE; CONSTRUCTION PERMITS

Sec. 70-531. Maintaining drainage systems; permitted alterations.

(a) Maintaining clear drainage system. All persons shall keep and maintain the drainage system, both surface and underground, located on their property free from obstructions, trash, and debris.

(b) Obstructing drainage system. No person shall deposit, or allow or cause to be deposited, into any part of the drainage system, including, but not limited to, street gutters, catchbasins, ditches, pipes, and streams, any material or substance that will cause or contribute to blockage or reduced discharge of the drainage system, or that will damage the drainage system. This includes, but is not limited to, refuse, rubbish, construction waste, leaves, landscaping debris, garbage, and dirt and sediment.

(c) Upset. The prohibition above shall not apply to NPDES-authorized discharges of sediment that result from an upset as defined in the applicable NPDES permit.

(d) Permitted activities. The provisions above do not prohibit the construction, reconstruction or alteration of drainage systems and BMPs that comply with city design standards and sound engineering practices where construction is in accordance with section 70-533, or the applicable sedimentation and erosion control program, and where the work employs adequate sediment and erosion control practices.

(Ord. No. 13342, § 1(23-151), 11-20-2006)

Sec. 70-532. Obstructing the free flow of water.

No person shall construct, install or maintain any stormwater or drainage system in such a manner as to obstruct or impede the free flow of water. This section does not apply to the construction, reconstruction or alteration of drainage systems and BMPs in compliance with city design standards and sound engineering practices and for which a permit or other approval has been secured from the city's stormwater services division.

this article is a violation of this article, unlawful, and subject to all remedies authorized under law, including, but not limited to, those described in this division.

(b)Separate offense. Each day of a violation may be considered a separate violation or offense.

(c)Persons responsible. All persons considered under the definitions of this article to be responsible for a violation shall be considered violators. Violators include, but are not limited to, owners of property where a violation occurs; persons in the design or construction field who have created, directed, or assisted in the design or construction of an improvement or feature in violation of the requirements of this article; and persons who have control over the use or maintenance of property or the activities occurring on property where a violation has occurred. Multiple violations may be charged against multiple individuals or entities for an action that violates this article.

(d)Remedies not limited. The remedies provided herein, whether civil, criminal, or administrative, are not exclusive; may be exercised singly, simultaneously, or cumulatively; may be combined with any other remedies authorized under the law; and may be exercised in any order.

(e)Public nuisance. A violation that results in observable or detectable negative impacts to the drainage system or to the public health or safety is a public nuisance and subject to all remedies for a nuisance available in law and equity.

(Ord. No. 13342, § 1(23-155), 11-20-2006)

Sec. 70-540. Remedies and penalties.

Remedies available for enforcement of this article, and penalties for its violation, include, but are not limited to, those described in the following subsections. Pursuit of certain remedies and penalties requires compliance with the procedures specified in section 70-541.

(1)Administrative remedies.

a. Show cause meeting. The director may have a meeting with the violator prior to taking any enforcement action under this article. The violator shall receive notice of such meeting consistent with procedures in section 70-541, and shall have an opportunity to be heard.

b. Consent orders. The director may enter into consent orders, assurances of voluntary compliance, or other similar agreements with a violator. Such agreements shall include, but not be limited to, specific action to be taken by the violator to correct the violation within the time period established in the order. A consent order may also include a mitigation project undertaken to improve environmental quality of the drainage system in the event that the director and the violator agree on such project as an additional compliance measure to generally remediate the impacts of a violation.

c. Administrative orders. The director may direct a violator to comply with this article through an administrative order which sets forth specific actions that must be taken and a timetable for taking them.

d. Mandatory security for compliance. The director may require a violator to post a bond or provide other financial security of a type, form, and amount as specified in the discretion of the director, to assure performance of any actions required to bring a property into compliance with this article.

11

1. The degree and extent of harm to the environment, the public health, public property, and private property;

2. The duration and gravity of the violation;

3. The effect on ground or surface water quality or on air quality or on flood hazard;

4. The cost of rectifying the damage;

5. The amount of money saved by noncompliance;

6. Knowledge of the requirements by the violator, and/or reasonable opportunity or obligation to obtain such knowledge;

7. Whether the violation was willful;

8. Actions taken by the violator to prevent or remediate the impacts;

9. Whether the violation is a repeat violation; and

10. The costs of enforcement to the city.

(3)Judicial actions.

a. Injunction, abatement. The director may institute an action in a court of competent jurisdiction for a mandatory or prohibitory injunction and/or an order of abatement or other equitable remedy that requires, among other things, that action be taken on property to correct a violation. A violator who fails to comply may be cited for contempt, and the city may execute the order under G.S. 160A-175(e). A violator may also be subject to remedies available for a nuisance under G.S. 160A-193 or other law. Costs of prosecution. and/or correction and of remediation of the violation may be assessed as a lien on the property upon which the violation has occurred, and collected as unpaid taxes, as provided by law.

b. Criminal prosecution and penalties. Violation of this article shall be a misdemeanor and is subject to the maximum fine permitted under state statutes. Each day of the violation shall be a separate offense and may be punished by imposition of the maximum fine.

c. Collection of civil penalties. Action may be instituted against the violator to recover any civil penalty that has not been paid within 30 days of the date the violator receives notice of the penalty.

(Ord. No. 13342, § 1(23-156), 11-20-2006)

Sec. 70-541. Procedures for notifying violator and meeting with director.

(a)Content of notice.

(1)Except in emergencies, as described hereafter, upon determining that a violation has occurred, the director shall provide to each violator against whom remedial action or penalties may be pursued, written notice that describes:

a. The location of the property and the nature of the violation;

b. A general description of the remedies and penalties that may be incurred if the violation is not corrected;

c. The action needed to correct the violation;

d. The time period during which corrective actions must occur;

e. How to provide explanatory or additional information and a contact person with whom the violation can be discussed;

f. How to request a meeting with the director available for certain violations as described below; and

g. The deadline for providing information or requesting a meeting.

director may seek immediate enforcement through any remedy or penalty authorized in this article or other applicable law.

(Ord. No. 13342, § 1(23-158), 11-20-2006)

Secs. 70-543--70-551. Reserved.

Attachment 2
City-County Planning Department – Supplementary Requirements
7.40 Service Stations and Vehicle Repair Shops

City-County Planning Department

- Planning Home
- Staffing
  - Director's Office
  - Development
  - Operations
  - Strategic Planning
  - Staff Directory
- Current Topics
  - Environmental Enhancements to UDO
  - Gateways
  - Golden Leaf Awards
- Ordinances
  - Unified Development Ordinance (UDO)
  - Durham Zoning Atlas
  - Development Plan Guidelines
  - Durham Design Guidelines
  - Landscape Guidelines
  - Neighborhood Meeting Guidelines
  - Old Zoning Ordinance
  - Old Subdivision Ordinance
- Boards and Commissions
  - Appearance Commission
  - Board of Adjustment
  - Design District Review Team
  - Development Review Board
  - Durham Open Space and Trails Commission
  - Environmental Affairs Board
  - Historic Preservation Commission
  - Joint City-County Planning Committee
  - Planning Commission
- Processes
  - Applications
  - Current Submittals

Supplementary Requirements

7.40 Service Stations and Vehicle Repair Shops

When allowed, service stations and vehicle repair shops shall be subject to the following additional requirements:

1. In zoning districts where trucks or other vehicles are displayed as an accessory use for rent, the site plan shall indicate the area to be used to display rental vehicles. Spaces for rental vehicles shall be in addition to any parking spaces required for operation of the other activities. Rental activities may not occupy more than 50% of the site area.
2. Fuel pumps shall be at least 15 feet from property lines. Canopies shall be at least 5 feet from property lines.
3. Any repair, servicing, maintenance, or other work on vehicles shall be conducted within an enclosed structure which does not exceed 20 feet in height.
4. Storage of vehicles for 15 days or more or junking of vehicles shall be prohibited. Vehicle sales shall also be prohibited.
5. Replacement parts and accessories shall be stored inside. Discarded parts shall not be stored outside.
6. Vehicles associated with the use shall not be stored or repaired within federal, state, or local public rights-of-way, including streets and sidewalks.
7. Uses not covered by an existing site plan shall organize the off-street parking areas to provide adequate customer parking and access for emergency vehicles.
8. Nothing in this subsection shall be construed as allowing properties designated as service stations or vehicle repair shops to be involved in disassembling, tearing down, or scrapping of a vehicle or to permit one vehicle to be scavenged or stripped for parts for use on another vehicle.
9. Vehicle stacking lanes in addition to the required parking spaces shall be provided when businesses perform services such as oil changes on successive vehicles. Stacking space for at least 4 vehicles shall be provided on the site. Parked vehicles and vehicles waiting for service may not block sidewalks, driveways, or streets.
10. A sight obscuring wall or hedge shall be provided adjacent to residential property in conformance with Section 10. The landscaping plan shall also be designed to reduce clear views through the building from the right of way.
11. A spill preventions and counter measures plan will be provided with the site plan that will include at a minimum:
    a. Cleanup procedures for spills occurring inside and outside the building.
    b. Counter measures for use in preventing spills from entering the storm water collection system.
    c. Routine cleanup procedures for work areas and parking areas. Wash down water shall not be permitted to enter the storm water collection system. [Please note the standards of Section 8 regarding Waste Products]
12. Additional conditions may be added by the approving authority as necessary in order to reduce the visual impact of the site on nearby properties and to protect the health, safety, and welfare of nearby properties. These may include but are not limited to additional buffering, additions to the landscape plan to reduce unsightly views, and other such measures.

    Existing vehicle repair shops on parcels with zoning that permits the use, which were in operation prior to January 1, 1994, and do not comply with the provisions above, shall have until January 1, 2006, to provide an opaque screen (a fence or wall at least 6 feet but no more than 8 feet in height, with a vegetative cover that, at maturity, covers 75% of the fence or wall, between the fence or wall and the property line) to fully screen the operations of the vehicle repair shop. Such fences shall not be located within any sight distance triangles at any intersection, but shall be set back to provide unimpeded vision clearance for vehicular traffic.

    Existing vehicle repair shops on parcels with zoning that does not permit the use, 1/2

Attachment 3
Pollution Prevention for Service Stations and Vehicle Repair Shops

Pollution Prevention For
Service Stations and Vehicle Repair Shops

Vehicle repair, servicing, maintenance, or other work that occurs either outdoors or in an indoor garage contributes to stormwater pollution through the mixing of fuels, oil, grease, antifreeze, heavy metals and paint. In the City of Durham, stormwater runoff does not go to a treatment plant. It is discharged to local streams and flows downstream when it enters one of two water supply reservoirs (Falls Lake or Jordan Lake.) In some cases stormwater is partially treated in a wet detention pond, a bioretention cell (a.k.a. rain garden), a sand filter or other stormwater treatment practice that has a limited ability to remove pollutants. Whether discharged directly to streams or indirectly via a stormwater treatment practice, it is important to understand that gasoline, oil and other automotive products can have a significant detrimental impact on fish and other aquatic organisms and to our drinking water supplies.

Durham Unified Development Ordinance Article 5 Section 5.3 requires that Convenience Stores with Gas Sales; Wrecking, Junk, and Salvage Yards; and Vehicle Service and Vehicle Service Limited uses provide a spill prevention and counter measures plan with the site plan (SPCMP). This plan must include at a minimum the following:

1. Cleanup procedures for spills occurring inside and outside the building.
2. Counter measures for use in preventing spills from entering the stormwater collection system.
3. Routine cleanup procedures for work areas and parking areas. Wash down water shall not be permitted to enter the stormwater collection system.

There are a number of practices that may be considered in the SPCMP that will minimize the possibility of wastes entering storm drains or streams.

Minimize Exposure Of High Risk Areas To Stormwater

Operations involving automotive fluids and cleaning solvents have significant potential to contaminate stormwater runoff. An overhead roof can eliminate the possibility of contact between rainfall and automotive fluids. In addition to overhead cover, the site can be equipped with intercept trenches, exterior berms, channels or swales to divert stormwater runoff away from high risk areas of operation.

Perform Work Over Surfaces That Can Be Cleaned

Vehicle service and fluid storage should take place over a concrete surface - a flat concrete surface makes spills and leaks easier to detect and to clean up. Use drip pans to contain any leaked fluids. Use appropriate fluid removal and handling equipment, such as suction systems, drain racks and/or funnels and stoppers for the fluid containers.

Minimize the possibility of contaminating soil. A relatively small amount of fluid may contaminate a much larger volume of soil, which often must be excavated, removed and disposed of as a hazardous waste.

Parts Storage

Store batteries, radiators and oily parts like transmissions and engines either indoors or else outside in weather-proof, non-leaking covered storage lockers. Monitor these storage locations for leaks. Promptly clean up any leaks. Lime can be used to neutralize battery acid.

Spill Clean-Up

Contain any spill as quickly as possible. Clean up spills promptly and thoroughly. The facility should have one or more appropriately stocked spill kits with sufficient absorbent material to handle a relatively large spill. The spill kit(s) should be available for use in areas where fluids are drained/filled, fluids are stored, parts are cleaned, fueling operations take place and batteries are stored. Most spills should be cleaned up using an appropriate dry absorbent material (Oil dry). Never wash spilled fluids into a storm drain.

Starter Spill Kit

- Safety goggles
- Gloves
- Oil dry
- Absorbent booms for containment
- Absorbent pillows or pads
- Shovel, broom, waste pan
- Heavy weight disposal bags or other containers

Kit contents will depend upon fluid types, volumes & potential for uncontained spills at the site.

Housekeeping

Cleanliness is an important practice for your business. It promotes professionalism and pride in your business. Both employees and customers appreciate a clean and responsible business. Keep all areas clean by "dry" sweeping. Sweeping the floor on a daily basis prevents unnecessary dirt and contaminant buildup. Also, clean equipment regularly in order to reduce the build up of grease and oil. Sweep and clean concrete fueling areas using dry absorbent materials. Regularly maintain oil-water separators, oil booms and other pollutant- collecting equipment.

Older Facilities

Facilities approved prior to January 1, 1994 are not currently required to perform all work indoors. These facilities must still carry out efforts to keep from contaminating stormwater runoff. Operators of these facilities should designate a specific area for vehicle maintenance only. Drip pans must be placed under all vehicles to prevent pollutants from mixing with storm water runoff. To further protect storm drains, create berms around the drains. (Commercial products are available that can be placed around storm drains to create temporary berms.) Storm drain inlets in the storage yard should be cleaned regularly. Cover the outdoor vehicle maintenance area when it is not in use.

All Facilities

Do not wash down maintenance areas to the stormwater system (drains, ditches, swales and pipes). Wash down or other cleaning of pavement that contains any harmful quantity of soap, detergent, solvent, degreaser or any other harmful cleaning substance shall not enter the

SPCMP GENERAL REQUIREMENTS

1. The SPCMP is a stand-alone document, generally on 8-1/2 x 11 pages plus accompanying site map that shall be developed and updated by the facility operator.
2. The SPCMP shall be retained on site and shall be made available to a representative of City of Durham.
3. The SPCMP shall be revised as appropriate and implemented prior to changes in activities which may significantly increase the quantities of pollutants in stormwater discharge or that cause a new area of activity at the facility to be exposed to stormwater runoff.

The SPCMP has two major objectives:

1. Identify and evaluate potential pollutants and sources of pollution associated with the activities associated with vehicle service or repair that may affect the quality of stormwater discharges from the facility; and
2. Identify and implement site-specific management practices to reduce or prevent pollutants resulting from site activities in stormwater discharges and authorized non-stormwater discharges, including:
    a. Routine cleanup procedures for work areas and parking areas that prevent wash waters from entering the storm water collection system; and
    b. Cleanup procedures for spills occurring inside and outside the building.

Pollution Prevention Team

For large facilities, the facility manager may designate an individual or individuals to assist in implementation and revision of the plan, as necessary. Such individual(s) shall be identified in the SWPPP together with their responsibilities, duties and activities under the SWPPP.

Name	
Title	
Telephone	
Responsibilities, Duties and Activities	

Name	
Title	
Telephone	
Responsibilities, Duties and Activities	

Name	
Title	
Telephone	
Responsibilities, Duties and Activities	

No.	Material	Location	Quantity
1			
2			
3			
4			
5			
6			
7			
8			
9			
10			
11			
12			
13			
14			

B. DESCRIPTION OF POTENTIAL POLLUTION SOURCES

The SWPPP shall include a narrative description of the facility's activities using significant materials as identified in Section II. A. above, together with associated potential pollution sources, and potential pollutants that could be discharged in stormwater discharges or authorized non-stormwater discharges. At a minimum, the following items related to a facility's activities shall be considered:

1. Activity – Describe each activity that uses significant materials within the facilities operations. Include any cleaning, rinsing, recycling, disposal, or other activities related to the process. Where applicable, areas protected by containment structures and the corresponding containment capacity shall be described.

Activity or Process	Significant Materials	Description of Activity

Date	Material Involved	Quantity	Cleanup Response	Residual Exposed	Preventative Measures

Attachment 4
Blower Skid System and Chiller Skid System

PLAN VIEW

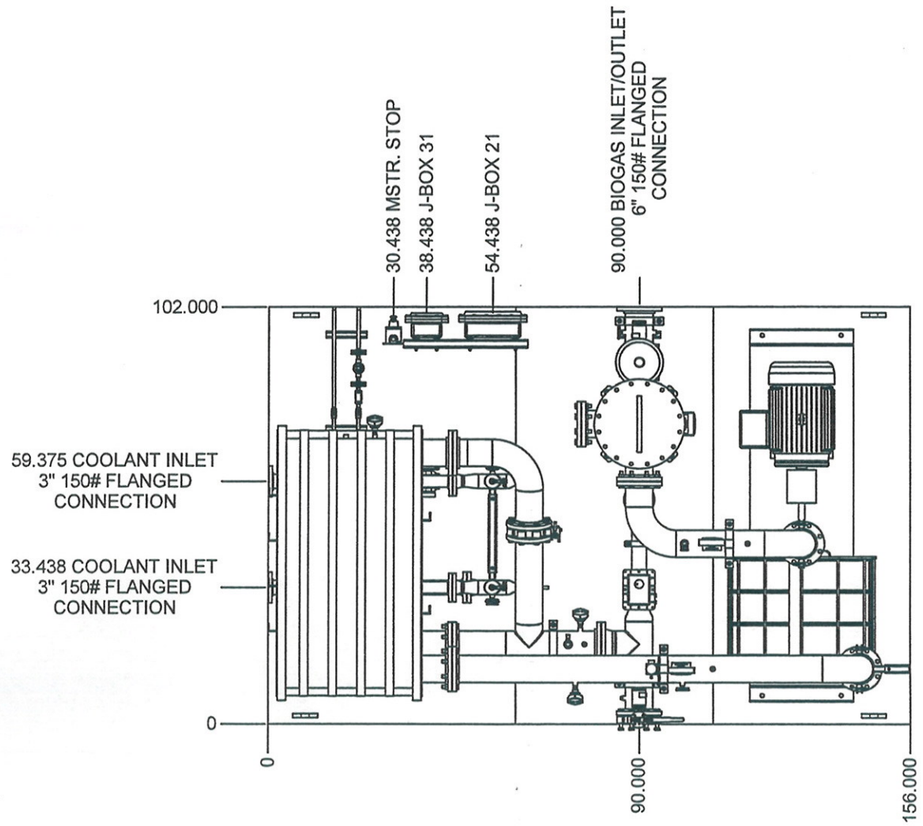

ISOMETRIC VIEW

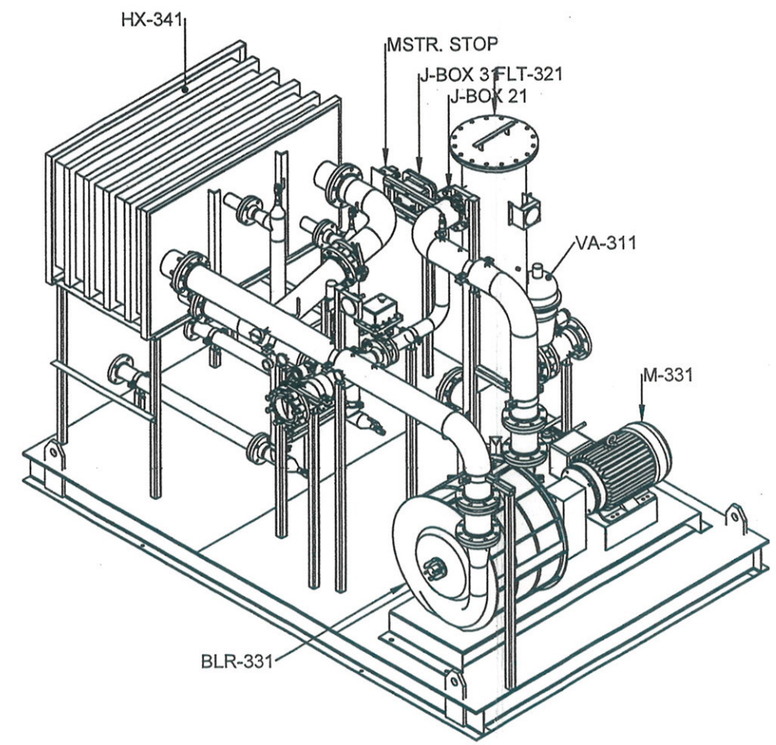

ELEVATION VIEW

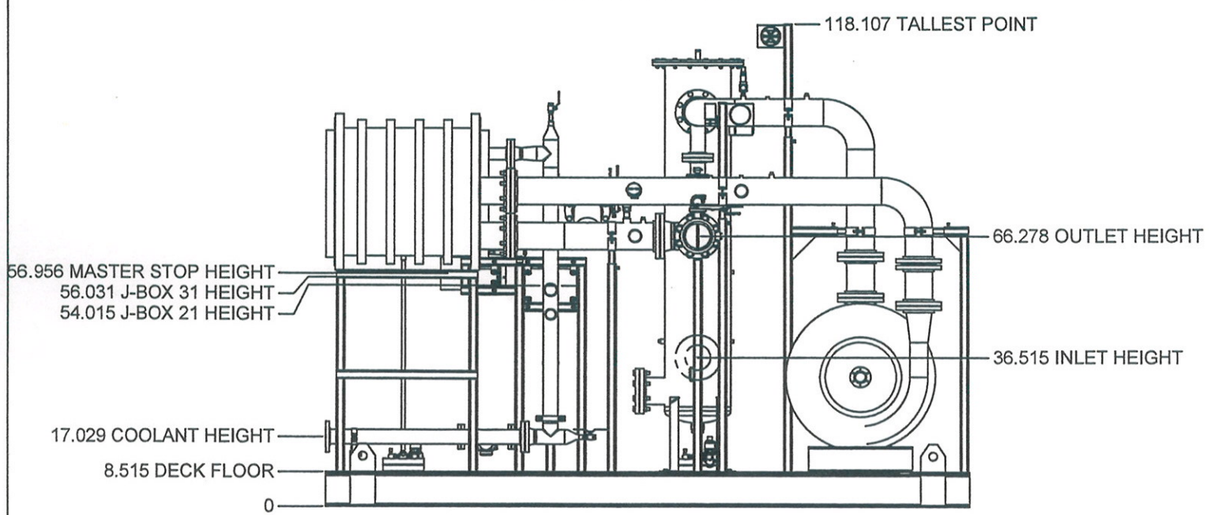

UNISON SOLUTIONS

Unison Solutions Inc.
5451 Chavenelle Road
Dubuque, IA 52002
PHONE: 563-585-0967 FAX: 563-585-0970

PROJECT	074 - DURHAM		
DESCRIPTION	SYSTEM LAYOUT - FINAL		
DRAWN BY	BH	DATE	1/13/2009
REVISION	-	DWG. NO.	6L-074-61

1/2

DUAL KVC-032-T4 CONDENSERS

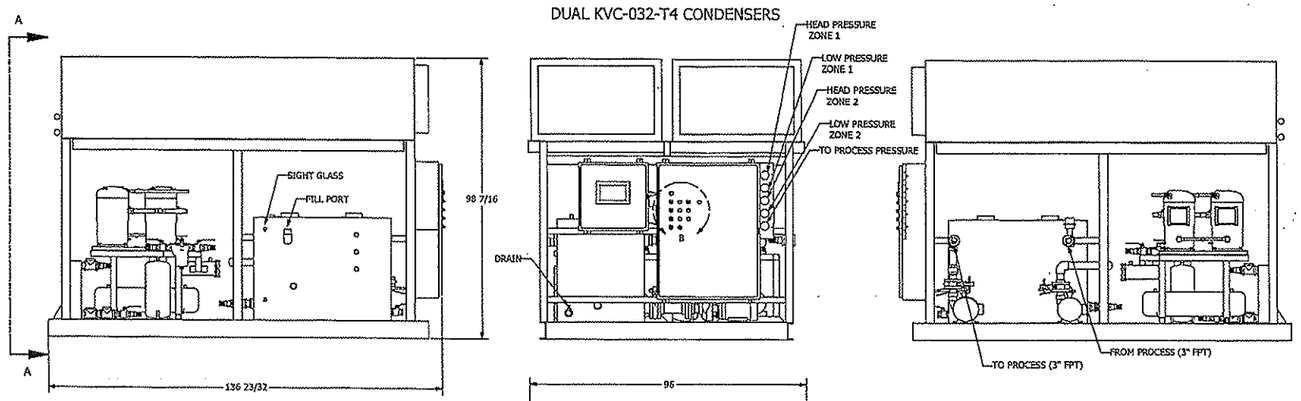

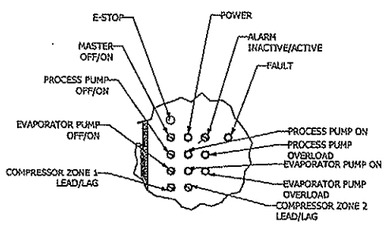

DETAIL B
SCALE 0.06 : 1

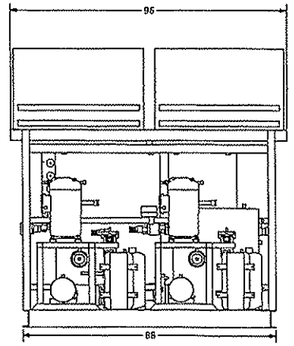

VIEW A-A
SCALE 0.03 : 1

* APPROVED - RELEASE FOR FABRICATION
11-18-08

ADVANTAGE
Industrial Heat Transfer Equipment
Advantage Engineering Incorporated
525 E. Stop 18 Rd Greenwood, IN 46142
Phone: 317-887-0729 Fax: 317-881-1277
www.advantageengineering.com

LABEL PLACEMENT

OACS-50D-M2C-2P

PART NUMBER	LP-2267	LP-2267.ldw
DESIGNER	asander	
DATE	11/13/2008	

2

Attachment 5
Example Jenbacher Genset Photographs

RMT

Photographic Log

Client Name:	Site Location:	Project No.:
City of Durham Landfill – LFGTE System	City of Durham, North Carolina	8029.01

Photo No.	Date
1	NA

Description
This is an example photograph of a Jenbacher engine generator set taken at a different project location.

Photo No.	Date
2	NA

Description
This is an example photograph of a Jenbacher engine generator set taken at a different project location.

Attachment 6
Spill Notification and Project Contact Information and Spill Recording Form

Spill Recording Form

Significant spills or leaks will be documented on the this table:

DATE	MATERIAL INVOLVED	QUANTITY	CLEANUP RESPONSE	RESULTING EXPOSURES	PREVENTATIVE MEASURES

Pollution Prevention Team

LFGTE Facility Manager:	Leon LeBlanc MP Durham LLC (Developer) (207) 646-6200 (office) (207) 604-6964 (mobile)
Emergency Response Coordinator:	The ERC will be determined prior to project start up. The ERC information will be included in the project O&M Plan and will be posted on-site.
General O&M Staff and Subcontractors:	Information will be provided to remaining O&M staff and subcontractors, including the requirements of this SPCMP.

Attachment 7
Article 21A, Oil Pollution and Hazardous Substances Control Act of 1978 (State of North Carolina)

Article 21A.

Oil Pollution and Hazardous Substances Control.

Part 1. General Provisions.

§ 143-215.75. Title.

This Article shall be known and may be cited as the "Oil Pollution and Hazardous Substances Control Act of 1978." (1973, c. 534, s. 1; 1979, c. 535, s. 1.)

§ 143-215.76. Purpose.

It is the purpose of this Article to promote the health, safety, and welfare of the citizens of this State by protecting the land and the waters over which this State has jurisdiction from pollution by oil, oil products, oil by-products, and other hazardous substances. It is not the intention of this Article to exercise jurisdiction over any matter as to which the United States government has exclusive jurisdiction, nor in any wise contrary to any governing provision of federal law, and no provision of this Article shall be so construed. The General Assembly further declares that it is the intent of this Article to support and complement applicable provisions of the Federal Water Pollution Control Act, as amended, 33 U.S.C. section 1251 et seq., as amended, and the National Contingency Plan for removal of oil adopted pursuant thereto. (1973, c. 534, s. 1; 1979, c. 535, s. 2.)

§ 143-215.77. Definitions.

As used in this Article, unless the context otherwise requires:

(1) "Barrel" shall mean 42 U.S. gallons at 60 degrees Fahrenheit.

(2) "Commission" means the North Carolina Environmental Management Commission.

(3) "Secretary" shall mean the North Carolina Secretary of Environment and Natural Resources.

(4) "Discharge" shall mean, but shall not be limited to, any emission, spillage, leakage, pumping, pouring, emptying, or dumping of oil or other hazardous substances into waters of the State or into waters outside the territorial limits of the State which affect lands, waters or uses related thereto within the territorial limits of the State, or upon land in such proximity to waters that oil or other hazardous substances is reasonably likely to reach the waters, but shall not include amounts less than quantities which may be harmful to the public health or welfare as determined pursuant to G.S. 143-215.77A; provided, however, that this Article shall not be construed to prohibit the oiling of driveways, roads or streets for reduction of dust or routine maintenance; provided further, that the use of oil or other hazardous substances, oil-based products, or chemicals on the land or waters by any State, county, or municipal government agency in any program of mosquito or other pest control, or their use by any person in accepted agricultural, horticultural, or forestry practices, or in connection with aquatic weed control or structural pest and rodent control, in a manner approved by the State, county, or local agency charged with authority over such uses, shall not constitute a discharge; provided, further, that the use of a pesticide regulated by the North Carolina Pesticide Board in a manner consistent with the labelling required by the North Carolina Pesticide Law shall not constitute a "discharge" for purposes of this Article. The word "discharge" shall also include any discharge upon land, whether or not in proximity to waters, which is intentional, knowing or willful.

(5) "Having control over oil or other hazardous substances" shall mean, but shall not be limited to, any person, using, transferring, storing, or transporting oil or other hazardous substances immediately prior to a discharge of such oil or other hazardous substances onto the land or into the waters of the State, and specifically shall include carriers and bailees of such oil or other hazardous substances. This definition shall not include any person supplying or delivering oil into a petroleum underground storage tank that is not owned or operated by the person, unless:

a. The person knows or has reason to know that a discharge is occurring from the petroleum underground storage tank at the time of supply or delivery;

b. The person's negligence is a proximate cause of the discharge; or

c. The person supplies or delivers oil at a facility that requires an operating permit under G.S. 143-215.94U and a currently valid operating permit certificate is not held or displayed at the time of the supply or delivery.

(5a) "Hazardous substance" shall mean any substance, other than oil, which when discharged in any quantity may present an imminent and substantial danger to the public health or welfare, as designated pursuant to G.S. 143-215.77A.

(6) Repealed by Session Laws 1979, c. 981, s. 5.

(7) "Department" shall mean the Department of Environment and Natural Resources.

(8) "Oil" shall mean oil of any kind and in any form, including, but specifically not limited to, petroleum, crude oil, diesel oil, fuel oil, gasoline, lubrication oil, oil refuse, oil mixed with other waste, oil sludge, petroleum related products or by-products, and all other liquid hydrocarbons, regardless of specific gravity, whether singly or in combination with other substances.

(9) "Bailee" shall mean any person who accepts oil or other hazardous substances to hold in trust for another for a special purpose and for a limited period of time.

(10) "Carrier" shall mean any person who engages in the transportation of oil or other hazardous substances for compensation.

(11) "Oil terminal facility" shall mean any facility of any kind and related appurtenances located in, on or under the surface of any land, or water, including submerged lands, which is used or capable of being used for the purpose of transferring, transporting, storing, processing, or refining oil; but shall not include any facility having a storage capacity of less than 500 barrels, nor any retail gasoline dispensing operation serving the motoring public. A vessel shall be considered an oil terminal facility only in the event that it is utilized to transfer oil from another vessel to an oil terminal facility; or to transfer oil between one oil terminal facility and another oil terminal facility; or is used to store oil.

(12) "Operator" shall mean any person owning or operating an oil terminal facility or pipeline, whether by lease, contract, or any other form of agreement.

(13) "Person" shall mean any and all natural persons, firms, partnerships, associations, public or private institutions, municipalities or political subdivisions, governmental agencies, or private or public corporations organized or existing under the laws of this State or any other state or country.

(14) "Pipeline" shall mean any conduit, pipe or system of pipes, and any appurtenances related thereto and used in conjunction therewith, used, or capable of being used, for transporting or transferring oil to, from, or between oil terminal facilities.

(15) "Restoration" or "restore" shall mean any activity or project undertaken in the public interest or to protect public interest or to protect public property or to promote the public health, safety or welfare for the purpose of restoring any lands or waters affected by an oil or other hazardous substances discharge as nearly as is possible or desirable to the condition which existed prior to the discharge.

(16) "Transfer" shall mean the transportation, on-loading or off-loading of oil or other hazardous substances between or among two or more oil terminal facilities; between or among oil terminal facilities and vessels; and between or among two or more vessels.

(17) "Vessel" shall include every description of watercraft or other contrivance used, or capable of being used, as a means of transportation on water, whether self-propelled or otherwise, and shall include, but shall not be limited to, barges and tugs; provided that the term "vessel" as used herein shall not apply to any pleasure, sport or commercial fishing vessel which has a fuel capacity of less than 500 gallons and is not used to transport petroleum, petroleum products, or general cargo.

(18) "Waters" shall mean any stream, river, creek, brook, run, canal, swamp, lake, sound, tidal estuary, bay, reservoir, waterway, wetlands, or any other body or accumulation of water, surface or underground, public or private, natural or artificial, which is contained within, flows through, or borders upon this State, or any portion thereof, including those portions of

the Atlantic Ocean over which this State has jurisdiction. (1973, c. 534, s. 1; c. 1262, s. 23; 1977, c. 771, s. 4; 1979, c. 535, ss. 3-10; c. 981, ss. 3-5; 1979, 2nd Sess., c. 1209, ss. 1, 2; 1987, c. 827, s. 155; 1989, c. 656, s. 1; c. 727, s. 218(111); 1995, c. 377, s. 12; 1997-443, s. 11A.119 (a).)

§ 143-215.77A. Designation of hazardous substances and determination of quantities which may be harmful.

(a) Those substances designated as hazardous as of June 1, 1980, by the Administrator of the United States Environmental Protection Agency under 33 U.S.C. 1321(b)(2)(A) are designated as hazardous substances for purposes of this Article.

(b) Such quantities of hazardous substances as may be harmful as determined as of June 1, 1980, by the Administrator of the United States Environmental Protection Agency under 33 U.S.C. 1321(b)(4) are quantities which may be harmful for purposes of this Article.

(c) Changes by Administrator of the United States Environmental Protection Agency in the designation of hazardous substances and the determination of quantities which may be harmful shall be deemed to be made to the designation of hazardous substances and the determination of quantities for purposes of this Article, unless the Commission objects within 120 days of publication of the action in the Federal Register. The Commission may object to a change by the Administrator on the basis that the change is not consistent with the standards for determining hazardous substances or harmful quantities. Upon objection by the Commission to a change, the Commission shall initiate rule-making proceedings on the change. The change will not be made pending the hearing and a final determination by the Commission. After the hearing, the Commission may reject the change upon a finding that the change is not consistent with the standards for determining hazardous substances or harmful quantities. (1979, 2nd Sess., c. 1209, s. 3; 1987, c. 827, s. 190.)

§ 143-215.78. Oil pollution control program.

The Department shall establish an oil pollution control program for the administration of this Article. The Department may employ and prescribe the duties of employees assigned to this activity. (1973, c. 534, s. 1; c. 1262, s. 23; 1979, c. 535, s. 11.)

§ 143-215.79. Inspections and investigations; entry upon property.

The Commission, through its authorized representatives, is empowered to conduct such inspections and investigations as shall be reasonably necessary to determine compliance with the provisions of this Article; to determine the person or persons responsible for violation of this Article; to determine the nature and location of any oil or other hazardous substances discharged to the land or waters of this State; and to enforce the provisions of this Article. The authorized representatives of the Commission are empowered upon presentation of their credentials to enter upon any private or public property, including boarding any vessel, for the purpose of inspection or investigation or in order to conduct any project or activity to contain, collect, disperse or remove oil or other hazardous substances discharges or to perform any restoration necessitated by an oil or other hazardous substances discharge. Neither the State nor its agencies, employees or agents shall be liable in trespass or damages arising out of the conduct of any inspection, investigation, or oil or other hazardous substances removal or restoration project or activity other than liability for damage to property or injury to persons arising out of the negligent or willful conduct of an employee or agent of the State during the course of an inspection, investigation, project or activity. (1973, c. 534, s. 1; c. 1262, s. 23; 1979, c. 535, s. 12; 1987, c. 827, s. 154.)

§ 143-215.80. Confidential information.

Any information relating to a secret process, device or method of manufacturing or production discovered or obtained in the course of an inspection, investigation, project or activity conducted pursuant to this Article shall not be revealed except as may be required by law or lawful order or process. (1973, c. 534, s. 1.)

§ 143-215.81. Authority supplemental.

The authority and powers granted under this Article shall be in addition to, and not in derogation of, any authority or powers vested in the Commission under any other provision of law, except to the extent that such

other powers or authority may conflict directly with the powers and authority granted under this Article. (1973, c. 534, s. 1; c. 1262, s. 23; 1987, c. 827, ss. 154, 191.)

§ 143-215.82. Local ordinances.

Nothing in the Article shall be construed to deny any county, municipality, sanitary district, metropolitan sewerage district or other authorized local governmental entity, by ordinance, regulation or law, from exercising police powers with reference to the prevention and control of oil or other hazardous substances discharges to sewers or disposal systems. (1973, c. 534, s. 1; 1979, c. 535, s. 13.)

Part 2. Oil Discharge Controls.

§ 143-215.83. Discharges.

(a) Unlawful Discharges. – It shall be unlawful, except as otherwise provided in this Part, for any person to discharge, or cause to be discharged, oil or other hazardous substances into or upon any waters, tidal flats, beaches, or lands within this State, or into any sewer, surface water drain or other waters that drain into the waters of this State, regardless of the fault of the person having control over the oil or other hazardous substances, or regardless of whether the discharge was the result of intentional or negligent conduct, accident or other cause.

(b) Excepted Discharges. – This section shall not apply to discharges of oil or other hazardous substances in the following circumstances:

(1) When the discharge was authorized by an existing rule of the Commission.

(2) When any person subject to liability under this Article proves that a discharge was caused by any of the following:

a. An act of God.

b. An act of war or sabotage.

c. Negligence on the part of the United States government or the State of North Carolina or its political subdivisions.

d. An act or omission of a third party, whether any such act or omission was or was not negligent.

e. Any act or omission by or at the direction of a law-enforcement officer or fireman.

(c) Permits. – Any person who desires or proposes to discharge oil or other hazardous substances onto the land or into the waters of this State shall first make application for and secure the permit required by G.S. 143-215.1. Application shall be made pursuant to the rules adopted by the Commission. Any permit granted pursuant to this subsection may contain such terms and conditions as the Commission shall deem necessary and appropriate to conserve and protect the land or waters of this State and the public interest therein. (1973, c. 534, s. 1; c. 1262, s. 23; 1979, c. 535, s. 14; 1987, c. 827, ss. 154, 192.)

§ 143-215.84. Removal of prohibited discharges.

(a) Person Discharging. – Any person having control over oil or other hazardous substances discharged in violation of this Article shall immediately undertake to collect and remove the discharge and to restore the area affected by the discharge as nearly as may be to the condition existing prior to the discharge. If it is not feasible to collect and remove the discharge, the person responsible shall take all practicable actions to contain, treat and disperse the discharge; but no chemicals or other dispersants or treatment materials which will be detrimental to the environment or natural resources shall be used for such purposes unless they shall have been previously approved by the Commission. The owner of an underground storage tank who is the owner of the tank only because he is the owner of the land on which the underground storage tank is located, who did not know or have reason to know that the underground storage tank was located on his property, and who did not become the owner of the land as the result of a transfer or transfers to avoid liability for the underground storage tank shall not be deemed to be responsible for a release or discharge from the underground storage tank.

(a1) The Commission shall not require collection or removal of a discharge or restoration of an affected area under subsection (a) of this section if the person having control over oil or other hazardous substances discharged in violation of this Article complies with rules governing the collection and removal of a discharge

and the restoration of an affected area adopted by the Commission pursuant to G.S. 143-214.1 or G.S. 143-215.94V. This subsection shall not be construed to affect the rights of any person under this Article or any other provision of law.

(b) Removal by Department. – Notwithstanding the requirements of subsection (a) of this section, the Department is authorized and empowered to utilize any staff, equipment and materials under its control or supplied by other cooperating State or local agencies and to contract with any agent or contractor that it deems appropriate to take such actions as are necessary to collect, investigate, perform surveillance over, remove, contain, treat or disperse oil or other hazardous substances discharged onto the land or into the waters of the State and to perform any necessary restoration. The Secretary shall keep a record of all expenses incurred in carrying out any project or activity authorized under this section, including actual expenses incurred for services performed by the State's personnel and for use of the State's equipment and material. The authority granted by this subsection shall be limited to projects and activities that are designed to protect the public interest or public property, and shall be compatible with the National Contingency Plan established pursuant to the Federal Water Pollution Control Act, as amended, 33 U.S.C. section 1251 et seq.

(c), (d) Repealed by Session Laws 1989, c. 656, s. 2.

(e) Notification of Completed Removal of Prohibited Discharges. – The definitions set out in G.S. 130A-310.31(b) apply to this subsection. Any person may submit a written request to the Department for a determination that a discharge of oil or a hazardous substance in violation of this Article has been remediated to unrestricted use standards. A request for a determination that a discharge has been remediated to unrestricted use standards shall be accompanied by the fee required by G.S. 130A-310.39(a)(2). If the Department determines that the discharge has been remediated to unrestricted use standards, the Department shall issue a written notification that no further remediation of the discharge will be required. The notification shall state that no further remediation of the discharge will be required unless the Department later determines, based on new information or information not previously provided to the Department, that the discharge has not been remediated to unrestricted use standards or that the Department was provided with false or incomplete information. Under any of those circumstances, the Department may withdraw the notification and require responsible parties to remediate the discharge to unrestricted use standards.

(f) In order to reduce or eliminate the danger to public health or the environment posed by a discharge or release of oil or a hazardous substance, an owner, operator, or other responsible party may impose restrictions on the current or future use of the real property comprising any part of the site if the restrictions meet the requirements of this subsection. The restrictions must be agreed to by the owner of the real property, included in a remedial action plan for the site that has been approved by the Secretary, and implemented as a part of the remedial action program for the site. The Secretary may approve restrictions included in a remedial action plan in accordance with standards determined: (i) pursuant to rules for remediation of soil or groundwater contamination adopted by the Commission; (ii) with respect to the cleanup of a discharge or release from a petroleum underground storage tank, pursuant to rules adopted by the Commission pursuant to G.S. 143-215.94V; or (iii) as provided in G.S. 130A-310.3(d). Restrictions may apply to activities on, over, or under the land, including, but not limited to, use of groundwater, building, filling, grading, excavating, and mining. Any approved restriction shall be enforced by any owner, operator, or other party responsible for the oil or hazardous substance discharge site. Any land-use restriction may also be enforced by the Department through the remedies provided in this Article, Part 2 of Article 1 of Chapter 130A of the General Statutes, or by means of a civil action. The Department may enforce any land-use restriction without first having exhausted any available administrative remedies. A land-use restriction may also be enforced by any unit of local government having jurisdiction over any part of the site. A land-use restriction shall not be declared unenforceable due to lack of privity of estate or contract, due to lack of benefit to particular land, or due to lack of any property interest in particular land. Any person who owns or leases a property subject to a land-use restriction under this Part shall abide by the land-use restriction. (1973, c. 534, s. 1; c. 1262, s. 23; 1975, c. 885; 1977, c. 771, s. 4; 1979, c. 535, s. 15; 1987, c. 827, ss. 154, 193; 1989, c. 656, s. 2; 1991, c. 538, s. 14; 1995, c. 377, s. 13; 1997-357, s. 7; 1997-394, s. 4; 1997-456, s. 50; 2001-384, s. 11.)

§ 143-215.85. Required notice.

(a) Except as provided in G.S. 143-215.94E(a1) and subsection (b) of this section, every person owning

or having control over oil or other substances discharged in any circumstances other than pursuant to a rule adopted by the Commission, a regulation of the U. S. Environmental Protection Agency, or a permit required by G.S. 143-215.1 or the Federal Water Pollution Control Act, upon notice that such discharge has occurred, shall immediately notify the Department, or any of its agents or employees, of the nature, location and time of the discharge and of the measures which are being taken or are proposed to be taken to contain and remove the discharge. The agent or employee of the Department receiving the notification shall immediately notify the Secretary or such member or members of the permanent staff of the Department as the Secretary may designate. If the discharged substance of which the Department is notified is a pesticide regulated by the North Carolina Pesticide Board, the Department shall immediately inform the Chairman of the Pesticide Board. Removal operations under this Article of substances identified as pesticides defined in G.S. 143-460 shall be coordinated in accordance with the Pesticide Emergency Plan adopted by the North Carolina Pesticide Board; provided that, in instances where entry of such hazardous substances into waters of the State is imminent, the Department may take such actions as are necessary to physically contain or divert such substance so as to prevent entry into the surface waters.

(b) As used in this subsection, "petroleum" has the same meaning as in G.S. 143-215.94A. A person who owns or has control over petroleum that is discharged into the environment shall immediately take measures to collect and remove the discharge, report the discharge to the Department within 24 hours of the discharge, and begin to restore the area affected by the discharge in accordance with the requirements of this Article if the volume of the petroleum that is discharged is 25 gallons or more or if the petroleum causes a sheen on nearby surface water or if the petroleum is discharged at a distance of 100 feet or less from any surface water body. If the volume of petroleum that is discharged is less than 25 gallons, the petroleum does not cause a sheen on nearby surface water, and the petroleum is discharged at a distance of more than 100 feet from all surface water bodies, the person who owns or has control over the petroleum shall immediately take measures to collect and remove the discharge. If a discharge of less than 25 gallons of petroleum cannot be cleaned up within 24 hours of the discharge or if the discharge causes a sheen on nearby surface water, the person who owns or has control over the petroleum shall immediately notify the Department. (1973, c. 534, s. 1; c. 1262, s. 23; 1977, c. 771, s. 4; c. 858, s. 1; 1979, c. 535, ss. 16, 17; 1987, c. 827, ss. 154, 194; 2000-54, s. 1.)

§ 143-215.85A. Recordation of oil or hazardous substance discharge sites.

(a) The owner of the real property on which a site is located that is subject to current or future use restrictions approved as provided in G.S. 143-215.84(f) shall submit to the Department a survey plat as required by this section within 180 days after the owner is notified to do so. The survey plat shall identify areas designated by the Department, shall be prepared and certified by a professional land surveyor, and shall be entitled "NOTICE OF OIL OR HAZARDOUS SUBSTANCE DISCHARGE SITE". Where an oil or hazardous substance discharge site is located on more than one parcel or tract of land, a composite map or plat showing all parcels or tracts may be recorded. The Notice shall include a legal description of the site that would be sufficient as a description in an instrument of conveyance, shall meet the requirements of G.S. 47-30 for maps and plats, and shall identify:

(1) The location and dimensions of the disposal areas and areas of potential environmental concern with respect to permanently surveyed benchmarks.

(2) The type, location, and quantity of oil or hazardous substances known to the owner of the site to exist on the site.

(3) Any restrictions approved by the Department on the current or future use of the site.

(b) After the Department approves and certifies the Notice, the owner of the site shall file the certified copy of the Notice in the register of deeds office in the county or counties in which the land is located within 15 days of the date on which the owner receives approval of the Notice from the Department.

(c) The register of deeds shall record the certified copy of the Notice and index it in the grantor index under the names of the owners of the lands.

(d) In the event that the owner of the site fails to submit and file the Notice required by this section within the time specified, the Secretary may prepare and file the Notice. The costs thereof may be recovered by the Secretary from any responsible party. In the event that an owner of a site who is not a responsible party

submits and files the Notice required by this section, he may recover the reasonable costs thereof from any responsible party.

(e) When an oil or hazardous substance discharge site that is subject to current or future land-use restrictions under this section is sold, leased, conveyed, or transferred, the deed or other instrument of transfer shall contain in the description section, in no smaller type than that used in the body of the deed or instrument, a statement that the property has been used as an oil or hazardous substance discharge site and a reference by book and page to the recordation of the Notice.

(f) A Notice of Oil or Hazardous Substance Discharge Site filed pursuant to this section may, at the request of the owner of the land, be cancelled by the Secretary after the hazards have been eliminated. If requested in writing by the owner of the land and if the Secretary concurs with the request, the Secretary shall send to the register of deeds of each county where the Notice is recorded a statement that the hazards have been eliminated and request that the Notice be cancelled of record. The Secretary's statement shall contain the names of the owners of the land as shown in the Notice and reference the plat book and page where the Notice is recorded. The register of deeds shall record the Secretary's statement in the deed books and index it on the grantor index in the names of the owners of the land as shown in the Notice and on the grantee index in the name "Secretary of Environment and Natural Resources". The register of deeds shall make a marginal entry on the Notice showing the date of cancellation and the book and page where the Secretary's statement is recorded, and the register of deeds shall sign the entry. If a marginal entry is impracticable because of the method used to record maps and plats, the register of deeds shall not be required to make a marginal entry. (1997-394, s. 5; 1997-443, s. 11A.119(b); 1997-456, s. 55.6(a), (b).)

§ 143-215.86. Other State agencies and State-designated local agencies.

(a) Planning. – The State Emergency Response Commission shall be responsible for developing a program, including training, for the waters of the State, including offshore marine waters, to enable the State to respond to an emergency oil or other hazardous substances spillage. In carrying out its duties under this section, designated representatives of the State Emergency Response Commission, the Board of Transportation, the Wildlife Resources Commission, the Environmental Management Commission, the Division of Marine Fisheries, the Outer Continental Shelf Lands Office of the Department of Administration, and any other agency or agencies of the State which the State Emergency Response Commission shall deem necessary and appropriate, shall confer and establish plans and procedures for the assignment and utilization of personnel, equipment and material to be used in carrying out the purposes of this Part. Every State agency involved is authorized to adopt such rules as shall be necessary to effectuate the purposes of this section.

(b) Cooperative Effort. – The Board of Transportation, the North Carolina Wildlife Resources Commission, the Division of Marine Fisheries, and any other agency of this State and any local agency designated by the State shall cooperate with and lend assistance to the Commission by assigning to the Commission upon its request personnel, equipment, and material to be utilized in any project or activity related to the containment, collection, dispersal, or removal of oil or other hazardous substances discharged upon the land or discharged into waters affecting this State.

(c) Trucks. – The Secretary of Transportation may, after consultation with the Secretary of Environment and Natural Resources, purchase and equip a sufficient number of trucks designed to carry out the provisions of subsection (b) of this section. These trucks shall be maintained by the Department of Transportation and shall be strategically located at various locations throughout the State so as to furnish a ready response when word of an oil or other hazardous substances discharge has been received. The Secretary of Environment and Natural Resources or his designee will, after consultation, decide where the trucks are to be located.

(d) Rules. – The Secretary of Transportation and the Secretary of Environment and Natural Resources or their designees shall adopt rules for the placement of these trucks and shall determine the manner and way in which they are to be used. The Secretary of Environment and Natural Resources shall reimburse the Department of Transportation for expenses incurred by the Department of Transportation during cleanups as provided in G.S. 143-215.88.

(e) Accounts. – Every State agency or other State-designated local agency participating in the containment, collection, dispersal, or removal of an oil or other hazardous substances discharge or in

restoration necessitated by such discharge, shall keep a record of all expenses incurred in carrying out any such project or activity including the actual services performed by the agency's personnel and the use of the agency's personnel and the use of the agency's equipment and material. A copy of all records shall be delivered to the Commission upon completion of the project or activity. (1973, c. 507, s. 5; c. 534, s. 1; c. 1262, s. 23; 1979, c. 535, ss. 18, 19; 1987, c. 827, ss. 154, 195; 1989, c. 656, s. 3; c. 727, ss. 164, 165; 1997-443, s. 11A.119(a).)

§ 143-215.87. Oil or Other Hazardous Substances Pollution Protection Fund.

There is hereby established under the control and direction of the Department an Oil or Other Hazardous Substances Pollution Protection Fund which shall be a nonlapsing, revolving fund consisting of any moneys appropriated for such purpose by the General Assembly or that shall be available to it from any other source. The moneys shall be used to defray the expenses of any project or program for the containment, collection, dispersal or removal of oil or other hazardous substances discharged to the land or waters of this State, or discharged into waters outside the territorial limits of the State which affect land and waters or related uses within the State; to assess damages for injury to, destruction of, or loss of use of natural resources; and to develop and implement plans for restoration, rehabilitation, replacement, or acquisition of the equivalent of the natural resources injured by the discharge. In addition to any moneys that shall be appropriated or otherwise made available to it, the fund shall be maintained by fees, charges, or other moneys except for the clear proceeds of civil penalties paid to or recovered by or on behalf of the Department under the provisions of this Part. Any moneys paid to or recovered by or on behalf of the Department as fees, charges, or other payments as damages authorized by this Part except for the clear proceeds of civil penalties shall be paid to the Oil or Other Hazardous Substances Pollution Protection Fund in an amount equal to the sums expended from the fund for the project or activity.

The clear proceeds of civil penalties provided for in this section shall be remitted to the Civil Penalty and Forfeiture Fund in accordance with G.S. 115C-457.2. (1973, c. 534, s. 1; c. 1262, s. 23; 1979, c. 535, s. 20; 1989, c. 656, s. 4; 1993, c. 402, s. 10; 1998-215, s. 67(b).)

§ 143-215.88. Payment to State agencies or State-designated local agencies.

Upon completion of any oil or other hazardous substances removal or restoration project or activity conducted pursuant to the provisions of this Part, each agency of the State or any State-designated local agency that has participated by furnishing personnel, equipment or material shall deliver to the Department a record of the expenses incurred by the agency. The amount of incurred expenses shall be disbursed by the Secretary to each such agency from the Oil or Other Hazardous Substances Pollution Protection Fund. Upon completion of any oil or other hazardous substances removal or restoration project or activity, the Secretary shall prepare a statement of all expenses and costs of the project or activity expended by the State and shall make demand for payment upon the person having control over the oil or other hazardous substances discharged to the land or waters of the State, unless the Commission shall determine that the discharge occurred due to any of the reasons stated in G.S. 143-215.83(b). Any person having control of oil or other hazardous substances discharged to the land or waters of the State in violation of the provisions of this Part and any other person causing or contributing to the discharge of oil or other hazardous substances shall be directly liable to the State for the necessary expenses of oil or other hazardous substances cleanup projects and activities arising from such discharge and the State shall have a cause of action to recover from any or all such persons. If the person having control over the oil or other hazardous substances discharged shall fail or refuse to pay the sum expended by the State, the Secretary shall refer the matter to the Attorney General of North Carolina, who shall institute an action in the name of the State in the Superior Court of Wake County, or in his discretion, in the superior court of the county in which the discharge occurred, to recover such cost and expenses. (1973, c. 534, s. 1; c. 1262, s. 23; 1977, c. 858, s. 2; 1979, c. 535, ss. 21, 22; 1987, c. 827, s. 154.)

§ 143-215.88A. Enforcement procedures: civil penalties.

(a) Any person who intentionally or negligently discharges oil or other hazardous substances, or knowingly causes or permits the discharge of oil in violation of this Part or fails to report a discharge as required by G.S. 143-215.85 or who fails to comply with the requirements of G.S. 143-215.84(a) or orders

issued by the Commission as a result of violations thereof, shall incur, in addition to any other penalty provided by law, a penalty in an amount not to exceed five thousand dollars ($5,000) for every such violation, the amount to be determined by the Secretary after taking into consideration the factors set out in G.S. 143B-282.1(b), the amount expended by the violator in complying with the provisions of G.S. 143-215.84, and the estimated damages attributed to the violator under G.S. 143-215.90. Every act or omission which causes, aids or abets a violation of this subsection shall be considered a violation under the provisions of this subsection and subject to the penalty herein provided. The procedures set out in G.S. 143-215.6 and G.S. 143B-282.1 shall apply to civil penalties assessed under this section. The penalty herein provided for shall become due and payable when the person incurring the penalty receives a notice in writing from the Commission describing the violation with reasonable particularity and advising such person that the penalty is due. A person may contest a penalty by filing a petition for a contested case under G.S. 150B-23 within 30 days after receiving notice of the penalty. If any civil penalty has not been paid within 30 days after notice of assessment has been served on the violator, the Secretary shall request the Attorney General to institute a civil action in the Superior Court of any county in which the violator resides or has his or its principal place of business to recover the amount of the assessment, unless the violator contests the assessment as provided in this subsection, or requests remission of the assessment in whole or in part. If any civil penalty has not been paid within 30 days after the final agency decision or court order has been served on the violator, the Secretary shall request the Attorney General to institute a civil action in the Superior Court of any county in which the violator resides or has his or its principal place of business to recover the amount of the assessment. Notification received pursuant to this subsection or information obtained by the exploitation of such notification shall not be used against any person in any criminal case, except as prosecution for perjury or for giving a false statement.

(b) The civil penalties provided by this section, except the civil penalty for failure to report, shall not apply to the discharge of a pesticide regulated by the North Carolina Pesticide Board, if such discharge would constitute a violation of the North Carolina Pesticide Law and if such discharge has not entered the surface waters of the State.

(c) The clear proceeds of civil penalties provided for in this section shall be remitted to the Civil Penalty and Forfeiture Fund in accordance with G.S. 115C-457.2. (1973, c. 534, s. 1; 1973, c. 1262, s. 23; 1979, c. 535, ss. 25, 26; 1987, c. 270; c. 827, ss. 154, 197; 1989 (Reg. Sess., 1990), c. 1036, s. 6; c. 1045, s. 7; c. 1075, s. 8; 1998-215, s. 67(a).)

§ 143-215.88B. Enforcement procedures: criminal penalties.

(a) No proceeding shall be brought or continued under this section for or on account of a violation by any person who has previously been convicted of a federal violation based upon the same set of facts.

(b) In proving the defendant's possession of actual knowledge, circumstantial evidence may be used, including evidence that the defendant took affirmative steps to shield himself from relevant information. Consistent with the principles of common law, the subjective mental state of defendants may be inferred from their conduct.

(c) For the purposes of the felony provisions of this section, a person's state of mind shall not be found "knowingly and willfully" or "knowingly" if the conduct that is the subject of the prosecution is the result of any of the following occurrences or circumstances:

(1) A natural disaster or other act of God which could not have been prevented or avoided by the exercise of due care or foresight.

(2) An act of third parties other than agents, employees, contractors, or subcontractors of the defendant.

(3) An act done in reliance on the written advice or emergency on-site direction of an employee of the Department. In emergencies, oral advice may be relied upon if written confirmation is delivered to the employee as soon as practicable after receiving and relying on the advice.

(4) An act causing no significant harm to the environment or risk to the public health, safety, or welfare and done in compliance with other conflicting environmental requirements or other constraints imposed in writing by environmental agencies or officials after written notice is delivered to all relevant agencies that the conflict exists and will cause a violation of the

identified standard.

(5) Violations of permit limitations causing no significant harm to the environment or risk to the public health, safety, or welfare for which no enforcement action or civil penalty could have been imposed under any written civil enforcement guidelines in use by the Department at the time, including but not limited to, guidelines for the pretreatment permit civil penalties. This subdivision shall not be construed to require the Department to develop or use written civil enforcement guidelines.

(d) All general defenses, affirmative defenses, and bars to prosecution that may apply with respect to other criminal offenses under State criminal offenses may apply to prosecutions brought under this section or other criminal statutes that refer to this section and shall be determined by the courts of this State according to the principles of common law as they may be applied in the light of reason and experience. Concepts of justification and excuse applicable under this section may be developed in the light of reason and experience.

(e) Any person who knowingly and willfully discharges or causes or permits the discharge of oil or other hazardous substances in violation of this Part shall be guilty of a Class H felony which may include a fine to be not more than one hundred thousand dollars ($100,000) per day of violation, provided that this fine shall not exceed a cumulative total of five hundred thousand dollars ($500,000) for each period of 30 days during which a violation continues. For the purposes of this subsection, the phrase "knowingly and willfully" shall mean intentionally and consciously as the courts of this State, according to the principles of common law interpret the phrase in the light of reason and experience.

(f) (1) Any person who knowingly discharges or causes or permits the discharge of oil or other hazardous substances in violation of this Part, and who knows at that time that he places another person in imminent danger of death or serious bodily injury shall be guilty of a Class C felony which may include a fine not to exceed two hundred fifty thousand dollars ($250,000) per day of violation, provided that this fine shall not exceed a cumulative total of one million dollars ($1,000,000) for each period of 30 days during which a violation continues.

(2) For the purposes of this subsection, a person's state of mind is knowing with respect to:

a. His conduct, if he is aware of the nature of his conduct;

b. An existing circumstance, if he is aware or believes that the circumstance exists; or

c. A result of his conduct, if he is aware or believes that his conduct is substantially certain to cause danger of death or serious bodily injury.

(3) Under this subsection, in determining whether a defendant who is a natural person knew that his conduct placed another person in imminent danger of death or serious bodily injury:

a. The person is responsible only for actual awareness or actual belief that he possessed; and

b. Knowledge possessed by a person other than the defendant but not by the defendant himself may not be attributed to the defendant.

(4) It is an affirmative defense to a prosecution under this subsection that the conduct charged was conduct consented to by the person endangered and that the danger and conduct charged were reasonably foreseeable hazards of an occupation, a business, or a profession; or of medical treatment or medical or scientific experimentation conducted by professionally approved methods and such other person had been made aware of the risks involved prior to giving consent. The defendant may establish an affirmative defense under this subdivision by a preponderance of the evidence.

(g) The criminal penalties provided by this section shall not apply to the discharge of a pesticide regulated by the North Carolina Pesticide Board, if such discharge would constitute a violation of the North Carolina Pesticide Law and if such discharge has not entered the surface waters of the State.

(h) Any person who knowingly and willfully makes any false statement, representation, or certification in any application, record, report, plan, or other document filed or required to be maintained under this Article or rules adopted under this Article; or who knowingly and willfully makes a false statement of a material fact in a rule-making proceeding or contested case under this Article; or who falsifies, tampers with, or knowingly and willfully renders inaccurate any recording or monitoring device or method required to be operated or maintained under this Article or rules adopted under this Article is guilty of a Class I felony, which may

include a fine not to exceed one hundred thousand dollars ($100,000) per day of violation, provided that the fine shall not exceed a cumulative total of five hundred thousand dollars ($500,000) for each period of 30 days during which a violation continues. (1973, c. 534, s. 1; 1973, c. 1262, s. 23; 1979, c. 535, ss. 25, 26; 1987, c. 270; c. 827, ss. 154, 197; 1989 (Reg. Sess., 1990), c. 1045, s. 8; 1993, c. 539, ss. 1316, 1317; 1994, Ex. Sess., c. 24, s. 14(c); 1997-394, s. 6.)

§ 143-215.89. Multiple liability for necessary expenses.

Any person liable for costs of cleanup of oil or other hazardous substances under this Part shall have a cause of action to recover such costs in part or in whole from any other person causing or contributing to the discharge of oil or other hazardous substances into the waters of the State, including any amount recoverable by the State as necessary expenses. The total recovery by the State for damage to the public resources pursuant to G.S. 143-215.90 and for the cost of oil or other hazardous substances cleanup, arising from any discharge, shall not exceed the applicable limits prescribed by federal law with respect to the United States government on account of such discharge. (1973, c. 534, s. 1; 1979, c. 535, s. 23; 1989 (Reg. Sess., 1990), c. 1045, s. 12.)

§ 143-215.90. Liability for damage to public resources.

(a) Any person who discharges oil or other hazardous substances in violation of this Article or violates any order or rule of the Commission adopted pursuant to this Article, or fails to perform any duty imposed by this Article, or violates an order or other determination of the Commission made pursuant to the provisions of this Article, including the provisions of a discharge permit issued pursuant to G.S. 143-215.1, and in the course thereof causes the death of, or injury to fish, animals, vegetation or other resources of the State or otherwise causes a reduction in the quality of the waters of the State below the standards set by the Commission, shall be liable to pay the State damages. Such damages shall be an amount equal to the cost of all reasonable and necessary investigations made or caused to be made by the Commission in connection with such violation and the sum of money necessary to restock such waters, replenish such resources, or otherwise restore the rivers, streams, bays, tidal flats, beaches, estuaries or coastal waters and public lands adjoining the seacoast to their condition prior to the injury as such condition is determined by the Commission in conference with the Wildlife Resources Commission, and any other State agencies having an interest affected by such violation (or by the designees of any such boards, commissions, and agencies).

(b) Upon receipt of the estimate of damages caused, the Department shall give written notice by registered or certified mail to the person responsible for the death, killing, or injury to fish, animals, vegetation, or other resources of the State, or any reduction in quality of the waters of the State, describing the damages and their causes with reasonable specificity, and shall request payment from such person. Damages shall become due and payable upon receipt of such notice. A person may contest an assessment of damages by filing a petition for a contested case under G.S. 150B-23 within 30 days after receiving notice of the damages. In a contested case hearing, the estimate of the replacement cost of fish or animals or vegetation destroyed, and the estimate of costs of replacing or restoring other resources of the State, and the estimate of the cost of restoring the quality of waters of the State shall be **prima facie** evidence of the actual replacement of cost of fish, animals, vegetation or other resources of the State, and of the actual cost of restoring the quality of the waters of the State; provided, that such evidence is rebuttable. In arriving at such estimate, any reasonably accurate method may be used and it shall not be necessary for any agent of the Department or Wildlife Resources Commission to collect, handle, or weigh numerous specimens of dead or injured fish, animals, vegetation or other resources of the State, or to calculate the costs of restoring the quality of the waters using any technology other than that which is existing and practicable, as found to be such by the Secretary. Provided, that the Department may effect such mitigation of the amount of damages as the Commission may deem proper and reasonable. If a person fails to pay damages assessed against him, the Commission shall refer the matter to the Attorney General for collection. Any money recovered by the Attorney General or by payment of damages by the person charged therewith by the Department shall be transferred by the Commission to appropriate funds administered by the State agencies affected by the violation for use in such activities as food fish or shellfish management programs, wildlife and waterfowl management programs, water quality improvement programs and such other uses as may best mitigate the damage incurred as a result of the

violation. No action shall be authorized under the provisions of this section against any person operating in compliance with the conditions of a waste discharge permit issued pursuant to G.S. 143-215.1 and the provisions of this Part.

(c) For the purpose of carrying out its duties under this Article, the Commission shall have the power to direct the investigation of any death, killing, or injury to fish, animals, vegetation or other resources of the State, or any reduction in quality of the waters of the State, which in the opinion of the Commission is of sufficient magnitude to justify investigation. (1973, c. 534, s. 1; c. 1262, s. 23; 1979, c. 535, s. 24; 1987, c. 827, ss. 154, 196.)

§ 143-215.91: Recodified as §§ 143-215.88A, 143-215.88B.

§ 143-215.91A. Limited liability for volunteers in oil and hazardous substance abatement.

Part 5 of this Article shall apply to the determination of civil liability or penalty pursuant to this Article. (1987, c. 269, s. 3.)

§ 143-215.92. Lien on vessel.

Any vessel (other than one owned or operated by the State of North Carolina or its political subdivisions or the United States government) from which oil or other hazardous substances is discharged in violation of this Part or any rule prescribed pursuant thereto, shall be liable for the pecuniary penalty and costs of oil or other hazardous substances removal specified in this Part and such penalty and costs shall constitute a lien on such vessel; provided, however, that said lien shall not attach if a surety bond is posted with the Commission in an amount and with sureties acceptable to the Commission, or a cash deposit is made with the Commission in an amount acceptable to the Commission. Provided further, that such lien shall not have priority over any existing perfected lien or security interest. The Commission may adopt rules providing for such conditions, limitations, and requirements concerning the bond or deposit prescribed by this section as the Commission deems necessary. (1973, c. 534, s. 1; c. 1262, s. 23; 1979, c. 535, s. 27; 1987, c. 827, ss. 154, 198.)

§ 143-215.93. Liability for damage caused.

Any person having control over oil or other hazardous substances which enters the waters of the State in violation of this Part shall be strictly liable, without regard to fault, for damages to persons or property, public or private, caused by such entry, subject to the exceptions enumerated in G.S. 143-215.83(b). (1973, c. 534, s. 1; 1979, c. 535, s. 28.)

§ 143-215.93A. Limitation on liability of persons engaged in removal of oil discharges.

(a) Except as provided in subsection (b) of this section, a person is not liable under this Part, Part 2C of this Article, Articles 21 and 21B of this Chapter, other provisions of the General Statutes relating to protection of the environment or public health, Chapter 1B of the General Statutes, or common law causes of action in tort for removal costs or damages which result from, arise out of, or are related to the discharge or threatened discharge of oil, when such removal costs or damages result from acts or omissions in the course of rendering care, assistance, or advice consistent with the National Contingency Plan or as otherwise directed by the President of the United States, the Federal On-Scene Coordinator, the Governor, the Secretary, the Secretary of Crime Control and Public Safety, or any person designated to direct oil discharge removal activities by the President of the United States, the Governor, the Secretary, or the Secretary of Crime Control and Public Safety.

(b) The limitation on liability under subsection (a) of this section does not apply:

(1) To a responsible party;

(2) To a response under CERCLA/SARA or under Part 4 of Article 9 of Chapter 130A of the General Statutes;

(3) To a response under Part 3 of Article 9 of Chapter 130A of the General Statutes;

(4) To a cleanup under Part 2A of this Article;

(5) With respect to personal injury or wrongful death; or

(6) If the person is grossly negligent or engages in willful misconduct.

(c) A responsible party is liable for any removal costs and damages that another person is relieved of

under this section.

(d) Nothing in this section affects the obligation of an owner or operator to respond immediately to a discharge, or the threat of a discharge, of oil.

(e) As used in this section:

(1) "CERCLA/SARA" means the Comprehensive Environmental Response, Compensation, and Liability Act of 1980, Pub. L. No. 96-510, 94 Stat. 2767, 42 U.S.C. § 9601 et seq., as amended, and the Superfund Amendments and Reauthorization Act of 1986, Pub. L. No. 99-499, 100 Stat. 1613, as amended.

(2) "Damages" has the same meaning as in the Oil Pollution Act of 1990, 33 U.S.C. § 2701, and in G.S. 143-215.94BB.

(3) "Federal On-Scene Coordinator" means a person designated as such in the National Contingency Plan.

(4) "National Contingency Plan" has the same meaning as in 33 U.S.C. § 1321, as amended.

(5) "Oil Pollution Act of 1990" means the Oil Pollution Act of 1990, Pub. L. No. 101-380, 104 Stat. 484, which appears generally as 33 U.S.C. § 2701 et seq., as amended.

(6) "Remove" or "removal" has the same meaning as in the Oil Pollution Act of 1990, 33 U.S.C. § 2701.

(7) "Removal costs" has the same meaning as in the Oil Pollution Act of 1990, 33 U.S.C. § 2701.

(8) "Responsible party" means a person who is a "responsible party" as defined in the Oil Pollution Act of 1990, 33 U.S.C. § 2701, and who is liable for removal costs or damages which result from, arise out of, or are related to the discharge or threatened discharge of oil. (1991, c. 432.)

§ 143-215.94. Joint and several liability.

In order to provide maximum protection for the public interest, any actions brought pursuant to G.S. 143-215.88 through 143-215.91(a), 143-215.93 or any other section of this Article, for recovery of cleanup costs or for civil penalties or for damages, may be brought against any one or more of the persons having control over the oil or other hazardous substances or causing or contributing to the discharge of oil or other hazardous substances. All said persons shall be jointly and severally liable, but ultimate liability as between the parties may be determined by common-law principles. (1973, c. 534, s. 1; 1977, c. 858, s. 3; 1979, c. 535, s. 29.)

Part 2A. Leaking Petroleum Underground Storage Tank Cleanup.

§ 143-215.94A. Definitions.

Unless a different meaning is required by the context, the following definitions shall apply throughout this Part and Part 2B of this Article:

(1a) "Affiliate" has the same meaning as in 17 Code of Federal Regulations § 240.12(b)-2 (1 April 1994 Edition), which defines "affiliate" as a person that directly, or indirectly through one or more intermediaries, controls, is controlled by, or is under common control of another person.

(1b) "Commercial Fund" means the Commercial Leaking Petroleum Underground Storage Tank Cleanup Fund established pursuant to this Part.

(2) "Commercial underground storage tank" means any one or combination of tanks (including underground pipes connected thereto) used to contain an accumulation of petroleum products, the volume of which (including the volume of the underground pipes connected thereto) is ten percent (10%) or more beneath the surface of the ground. The term "commercial underground storage tank" does not include any:

a. Farm or residential underground storage tank of 1,100 gallons or less capacity used for storing motor fuel for noncommercial purposes;

b. Underground storage tank of 1,100 gallons or less capacity used for storing heating oil for consumptive use on the premises where stored;

Appendix H
Draft Cost Estimate for LFGTE System Decommissioning

Engineering Opinion of Probable Cost for LFGTE System Decommissioning

Landfill Post-Closure Care Efforts

Durham Municipal Landfill

Solid Waste Permit Modification (Revised Application)

MAJOR COST ITEM	UNIT	UNIT COST	QUANTITY	TOTAL COST [1]
LFGTE System Disconnections [2]				
-Electrical Systems	Lump Sum	$2,000	1	$2,000.00
-Mechanical Systems	Lump Sum	$2,000	1	$2,000.00
-Condensate Systems	Lump Sum	$1,000	1	$1,000.00
Removal From Site [3]				
-Blower System Skid	Lump Sum	$1,000	1	$1,000.00
-Chiller System Skid	Lump Sum	$1,000	1	$1,000.00
-Generator Sets	Each	$1,000	3	$3,000.00
-Generator Transformers	Lump Sum	$500	3	$1,500.00
- Motor Control Center, Etc.	Lump Sum	$1,000	1	$1,000.00
Infrastructure Abandonments -Concrete pad demolition, removal, and disposal	LS	$3,000	1	$3,000.00
Final Site Clean-Up Efforts -Trash and Housekeeping	LS	$1,000	1	$1,000.00
			APPROXIMATE TOTAL COST =	$16,500.00

Assumptions:

1. Annual costs are in 2003 dollars.
2. Costs include making proper modifications to maintain back-up blower and flare system operation.
3. Costs assume that the Electrical and Control building remains for City use.

Date: April 14, 2009

By: D. Free

Checked: J. Schoephoester

Appendix I
Existing LFG Collection System Layout Drawing