RICHARDSON SMITH GARDNER
& ASSOCIATES
ENGINEERING & GEOLOGICAL
SERVICES

June 8, 2010

Mr. John Murray, P.E.
Regional Engineer
NC DENR - Division of Waste Management
610 E. Center Ave.
Mooresville, NC 28115

RE: Davidson County Landfill (NC Permit No 29-06)
Landfill Gas to Energy Project
LFG Collection System - Holly Grove Landfill
Request for Permit Modification

Dear Mr. Murray:

On behalf of Davidson Gas Producers, LLC and per our prior correspondence, Richardson Smith Gardner & Associates, Inc. (RSG) would like to request a permit modification for construction of a landfill gas collection system on Areas I and II of the Holly Grove Landfill. This request follows from the construction notification provided by Davidson County dated April 21, 2009 and the successful installation and testing of test wells in both Area I (W301) and Area II (W401).

The attached project drawings show the arrangement of extraction wells proposed for installation in this unlined landfill as well as the layout of collection system and header piping that will connect the Holly Grove collection system with the existing collection system on the Phase 1 (Subtitle D) landfill unit. Additionally, attached are technical specifications which describe the components of the work. In particular, Section 02250 (Soil Liner) describes repairs to the existing Area II final cover system that will be required for well and piping installation. The Area I final cover will be repaired by ensuring a minimum of two feet of soil cover over the waste at the completion of the work. RSG will perform and document construction quality assurance (CQA) activities for the installation of the LFG collection system in conjunction with our work on the Phase 1B closure, which is set to begin later this month. CQA work will be performed in accordance with the site's approved CQA manual (copy attached).

Please contact me at your earliest convenience if you have any questions or require additional information at this time.

Sincerely,
Richardson Smith Gardner & Associates, Inc.

NORTH CAROLINA PROFESSIONAL SEAL 021666 ENGINEER PIETER K. SCHEER
6/8/10

Pieter K. Scheer, P.E.
Principal, Senior Engineer
pieter@rsgengineers.com

Attachments: Technical Specifications
Approved CQA Manual
LFG Collection System Drawings

cc: Amanda Gentner, DTE Biomass Energy
Marcus Bilinski, P.E., DTE Biomass Energy
Charlie Brushwood, Davidson County

DAVIDSON GAS PRODUCERS, LLC
ANN ARBOR, MICHIGAN

DAVIDSON COUNTY, NORTH CAROLINA
HOLLY GROVE LANDFILL
LANDFILL GAS COLLECTION SYSTEM
CONSTRUCTION DRAWINGS

JUNE 2010

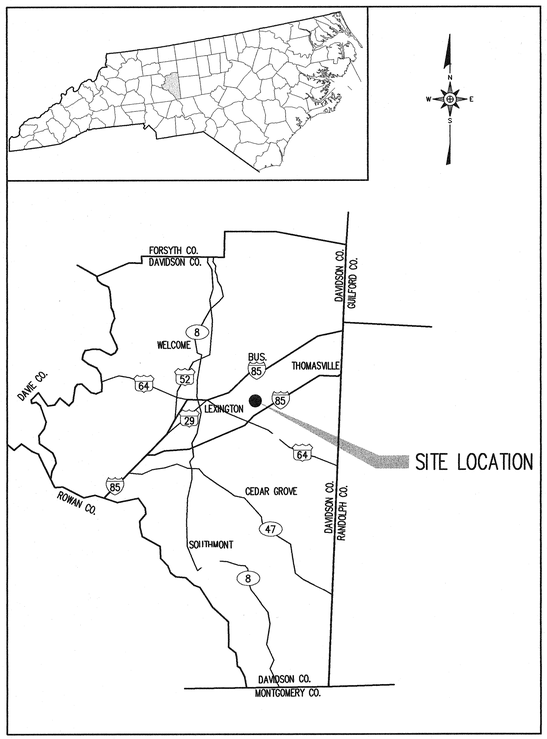

SITE LOCATION MAP
NOT TO SCALE

SHEET NO.	DRAWING NO.	TITLE
1	–	TITLE – COVER SHEET
2	LFG1	LANDFILL GAS COLLECTION SYSTEM PLAN
3	LFG2	LANDFILL GAS HEADER PIPE PLAN & PROFILE (SHEET 1 OF 2)
4	LFG3	LANDFILL GAS HEADER PIPE PLAN & PROFILE (SHEET 2 OF 2)
5	D1	DETAILS (SHEET 1 OF 3)
6	D2	DETAILS (SHEET 2 OF 3)
7	D3	DETAILS (SHEET 3 OF 3)

FOR BIDDING
NOT FOR CONSTRUCTION

SAFETY NOTE:
Contractor shall be solely responsible for initiating, maintaining and supervising all safety precautions and programs in connection with the Work. Contractor shall comply with all applicable Laws and Regulations relating to the safety of persons or property, or to the protection of persons or property from damage, injury, or loss; and shall erect and maintain all necessary safeguards for such safety and protection.

STANDARD SECTION LOCATION CALLOUT (SHEET AND DETAIL)

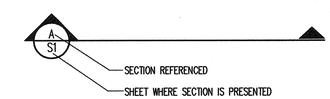

STANDARD DETAIL CALLOUT

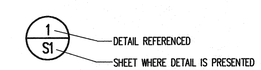

STANDARD DETAIL LABEL AND CALLOUT

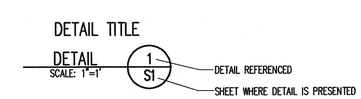

STANDARD REVISION CALLOUT (SHEET AND DETAIL)

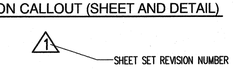

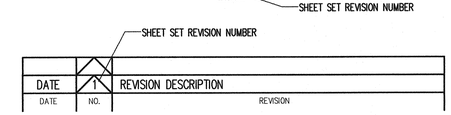

RICHARDSON SMITH GARDNER & ASSOCIATES
14 N. Boylan Ave.
Raleigh, N.C. 27603
NC LIC. NO. C-0828 (Engineering)
www.rsgengineers.com
ph: 919-828-0577
fax: 919-828-3899

FILE NAME
DTE-D0539

G:\CAD\Davidson\DTE 10-11sheets\DTE-D0539.dwg - 6/1/2010 6:35 PM

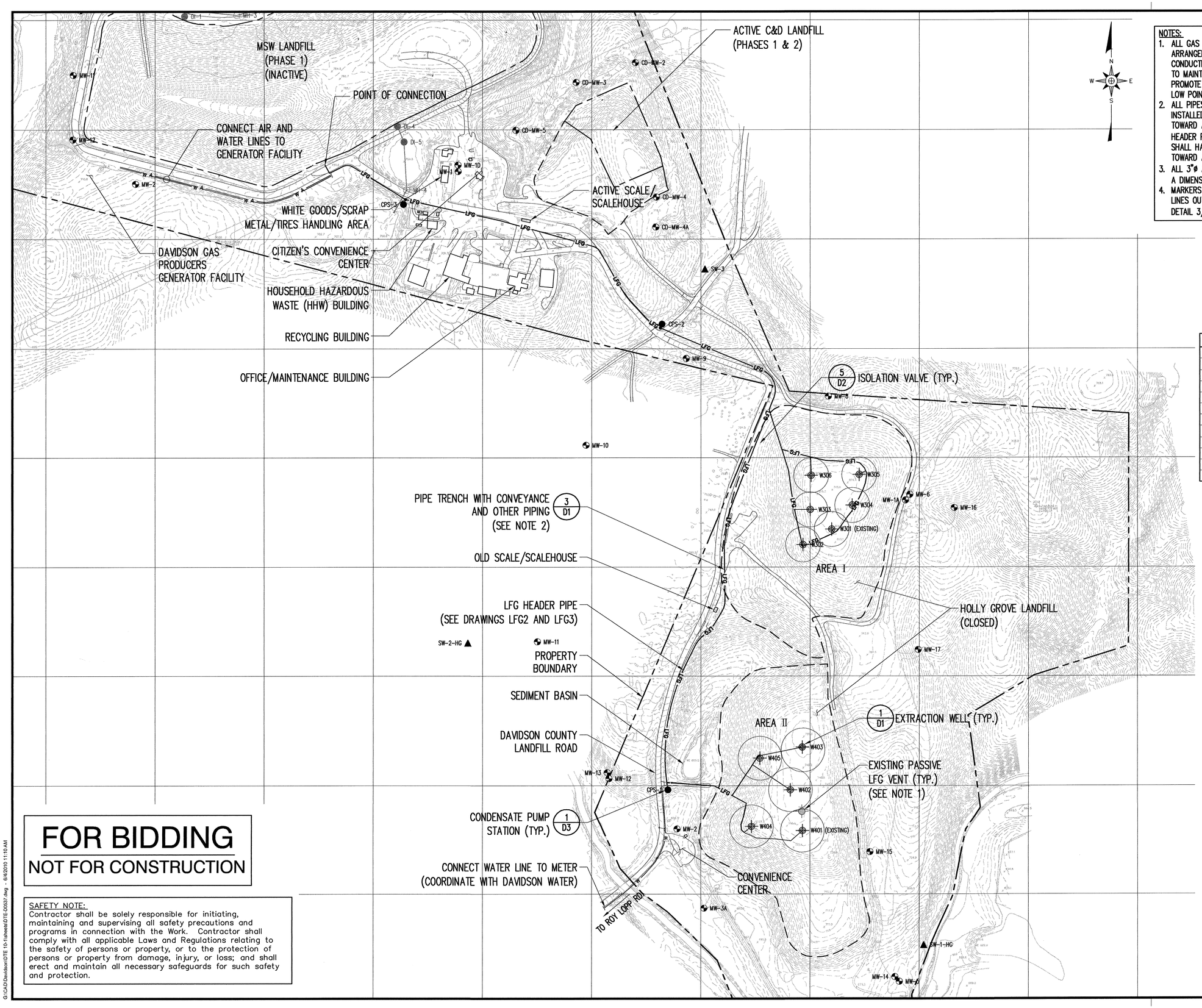

NOTES:
1. ALL GAS PIPING IS SHOWN FOR GENERAL ARRANGEMENT. FIELD ADJUSTMENTS SHALL BE CONDUCTED AS DIRECTED BY THE ENGINEER TO MAINTAIN MINIMUM PIPE SLOPE AND TO PROMOTE CONDENSATE DRAINAGE TO SYSTEM LOW POINTS.
2. ALL PIPES WITHIN WASTE LIMITS SHALL BE INSTALLED WITH A MINIMUM SLOPE OF 3% TOWARD A CONDENSATE DEVICE. ALL HEADER PIPING (OUTSIDE WASTE LIMITS) SHALL HAVE A MINIMUM SLOPE OF 1% TOWARD A CONDENSATE DEVICE.
3. ALL 3"ø AND LARGER HDPE PIPE SHALL HAVE A DIMENSION RATIO (DR) OF 17.
4. MARKERS SHALL BE PROVIDED FOR ALL LFG LINES OUTSIDE OF THE WASTE LIMITS PER DETAIL 3/D1.

WELL SCHEDULE			
WELL ID	ELEVATION	DEPTH	BOTTOM ELEV.
W301 (EXISTING)	814.5	66'	748.5
W302	801.5	53'	748.5
W303	813.0	64'	749.0
W304	813.0	64'	749.0
W305	813.0	64'	749.0
W306	813.0	64'	749.0
W401 (EXISTING)	745.6	40'	705.6
W402	747.0	41'	706.0
W403	750.9	45'	705.9
W404	737.0	31'	706.0
W405	729.0	23'	706.0

*WELL ELEVATIONS ARE APPROXIMATE.

LEGEND

- 660 — EXISTING 10' CONTOUR (SEE REFERENCE 1)
- EXISTING 2' CONTOUR
- PROPERTY LINE
- LIMIT OF LINER (EXISTING LINED UNITS)
- APPROXIMATE EXISTING WASTE LIMITS (UNLINED UNITS)
- LFG — LANDFILL GAS (LFG) HEADER PIPE (SEE NOTE 2)
- LANDFILL GAS (LFG) LATERAL PIPE
- C — 2"ø HDPE (DR 11) CONDENSATE FORCE MAIN
- A — 1 1/4"ø HDPE (DR 11) COMPRESSED AIR SUPPLY
- W — 2"ø HDPE (DR 11) WATER LINE
- ISOLATION VALVE
- MW-8D — EXISTING MONITORING WELL
- SW-3 — EXISTING SURFACE WATER SAMPLING POINT
- CS-1 — CONDENSATE PUMP STATION
- EXISTING PASSIVE LFG VENT

NOTES

1. CAP OFF TWO EXISTING PASSIVE LFG VENTS SHOWN IN AREA II. W403 IS TO BE DRILLED AT THE LOCATION OF ONE OF THESE PASSIVE VENTS.
2. FOR CLARITY, CONDENSATE FORCE MAIN, AIR SUPPLY LINE, AND WATER LINE ARE NOT SHOWN ON THIS PLAN WHERE LOCATIONS ARE COINCIDENT WITH THE LANDFILL GAS HEADER PIPE.

REFERENCES

1. OVERALL TOPOGRAPHY PER NORTH CAROLINA DEPARTMENT OF TRANSPORTATION, CONTOUR AND ELEVATION DATA GENERATED FROM LIGHT DETECTION AND RANGING (LIDAR) DATA OBTAINED FROM THE NORTH CAROLINA FLOOD MAPPING PROGRAM AND DATED SEPTEMBER 2004. TOPOGRAPHY IN C&D AND MSW AREAS FROM SPATIAL DATA, AERIAL DATED 5/13/09.
2. TOPOGRAPHY IN PHASE 1, AREA 1 AND 2, PROVIDED BY MICHAEL GREEN ASSOCIATES, SURVEY DATED 2/9/10.

0 200' 400' 600'

FOR BIDDING
NOT FOR CONSTRUCTION

SAFETY NOTE:
Contractor shall be solely responsible for initiating, maintaining and supervising all safety precautions and programs in connection with the Work. Contractor shall comply with all applicable Laws and Regulations relating to the safety of persons or property, or to the protection of persons or property from damage, injury, or loss; and shall erect and maintain all necessary safeguards for such safety and protection.

NO.	DATE	REVISION

RICHARDSON SMITH GARDNER & ASSOCIATES
NC LIC. NO. C-0205 (Engineering)
14 N. Boylan Ave.
Raleigh, N.C. 27603
ph: 919-828-0577
fax: 919-828-3899
www.rsgengineers.com

SEAL: NORTH CAROLINA PROFESSIONAL ENGINEER SEAL 021606 PETER K. JOHNSON 6/7/10

PROJECT TITLE: DAVIDSON GAS PRODUCERS, LLC
HOLLY GROVE LANDFILL
LFG COLLECTION SYSTEM
CONSTRUCTION DRAWINGS

DRAWING TITLE: LANDFILL GAS COLLECTION SYSTEM PLAN

DESIGNED BY: P.K.S.	DRAWN BY: C.T.J.
CHECKED BY:	PROJECT NO.: DTE 10-1
SCALE: AS SHOWN	DATE: JUNE 2010
FILE NAME: DTE-D0537	
SHEET NO. 2	DRAWING NO. LFG1

G:\CAD\Davidson\DTE 10-1\sheets\DTE-D0537.dwg - 6/4/2010 11:10 AM

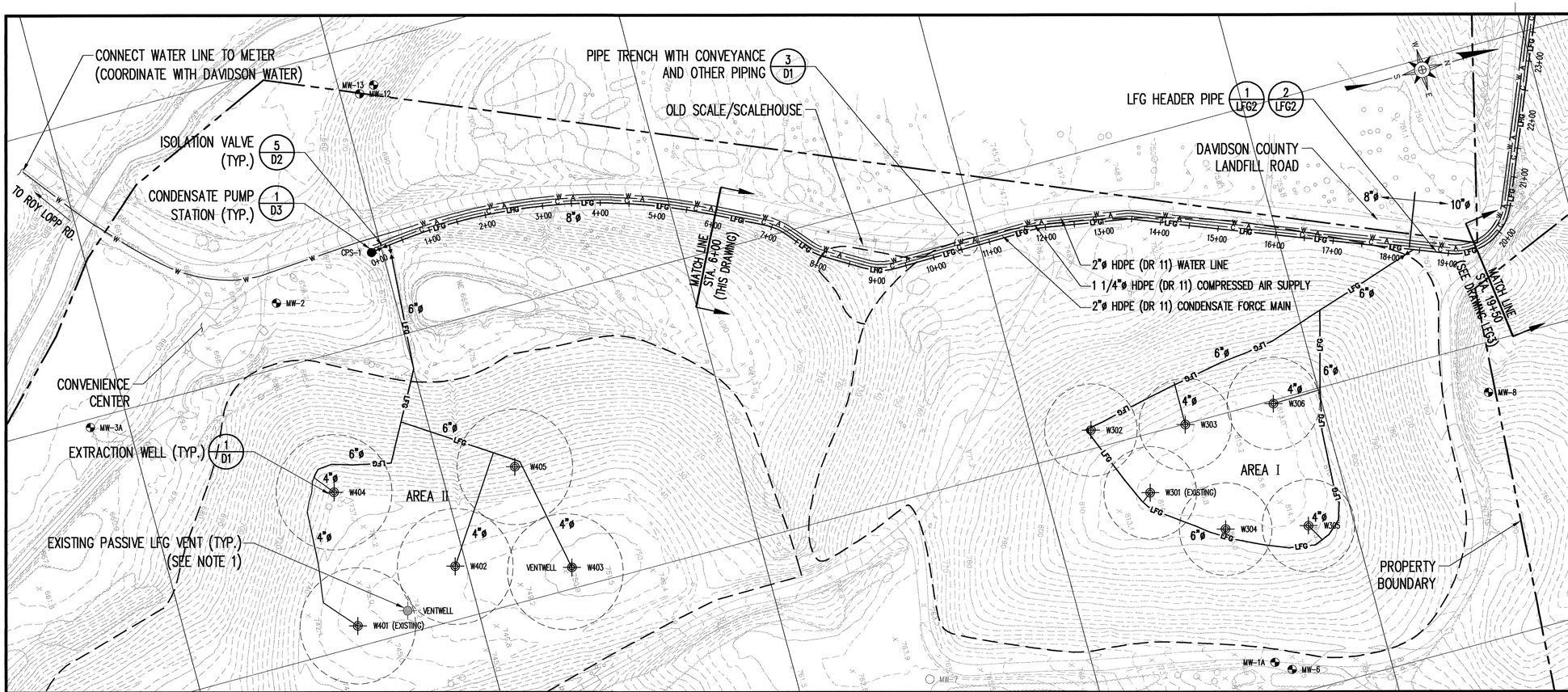

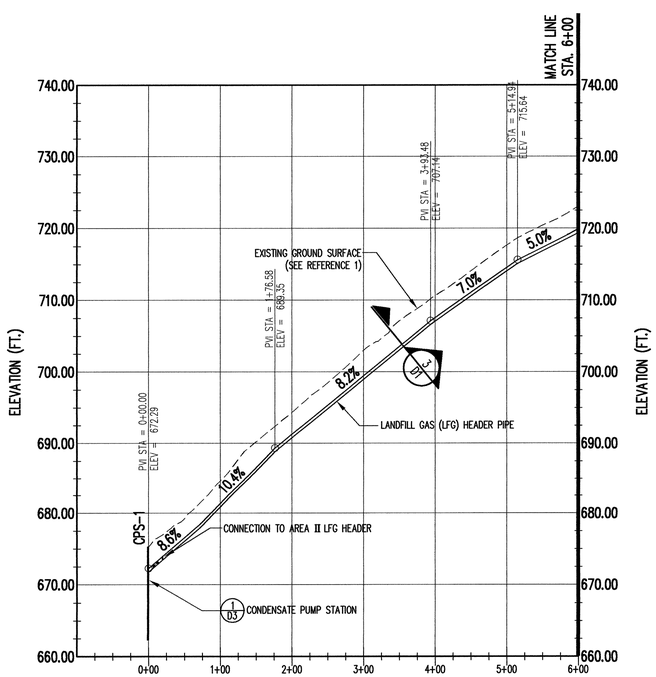

PROFILE 1/LFG2
NOT TO SCALE

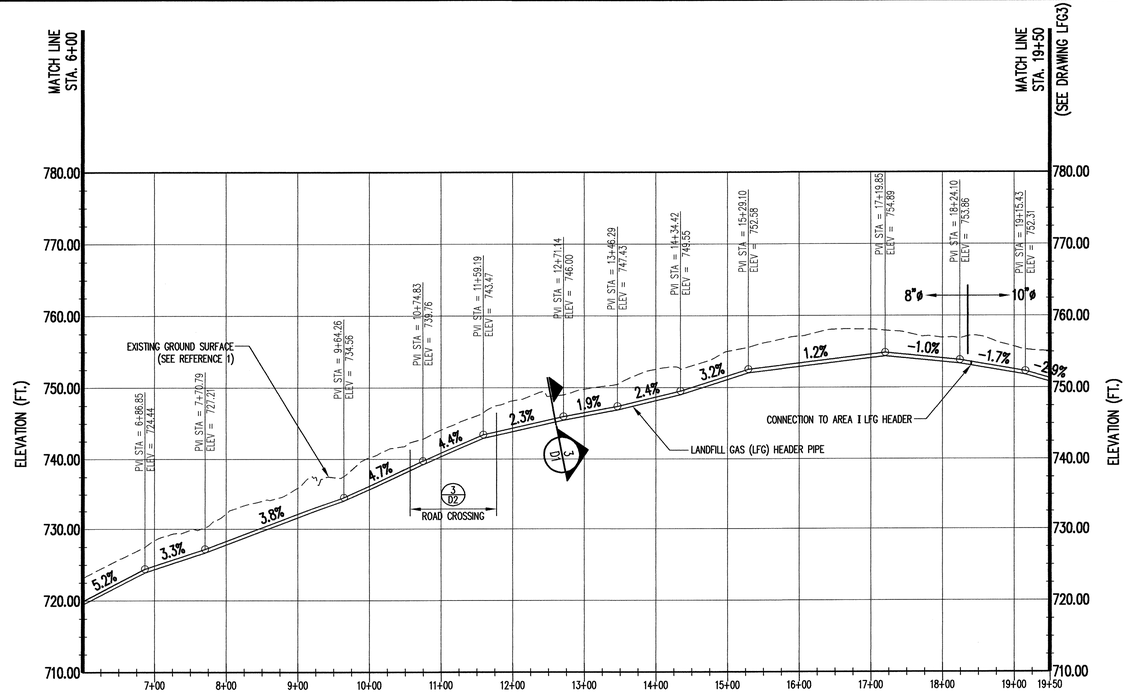

PROFILE 2/LFG2
NOT TO SCALE

LEGEND

- EXISTING 10' CONTOUR (SEE REFERENCE 1)
- EXISTING 2' CONTOUR
- PROPERTY LINE
- APPROXIMATE EXISTING WASTE LIMITS (UNLINED UNITS)
- LFG — LANDFILL GAS (LFG) HEADER PIPE (SEE NOTE 2)
- LANDFILL GAS (LFG) LATERAL PIPE
- C — 2"ø HDPE (DR 11) CONDENSATE FORCE MAIN
- A — 1 1/4"ø HDPE (DR 11) COMPRESSED AIR SUPPLY
- W — 2"ø HDPE (DR 11) WATER LINE
- ISOLATION VALVE
- MW-8D — EXISTING MONITORING WELL
- SW-3 — EXISTING SURFACE WATER SAMPLING POINT
- CS-1 — CONDENSATE PUMP STATION
- EXISTING PASSIVE LFG VENT

0 100' 200' 300'

LEGEND

- EXISTING GROUND SURFACE (SEE REFERENCE 1)
- PROPOSED LANDFILL GAS HEADER PIPE

REFERENCES

1. OVERALL TOPOGRAPHY PER NORTH CAROLINA DEPARTMENT OF TRANSPORTATION, CONTOUR AND ELEVATION DATA GENERATED FROM LIGHT DETECTION AND RANGING (LIDAR) DATA OBTAINED FROM THE NORTH CAROLINA FLOOD MAPPING PROGRAM AND DATED SEPTEMBER 2004. TOPOGRAPHY IN C&D AND MSW AREAS FROM SPATIAL DATA, AERIAL DATED 5/13/09.
2. TOPOGRAPHY IN PHASE 1, AREA 1 AND 2, PROVIDED BY MICHAEL GREEN ASSOCIATES, SURVEY DATED 2/9/10.

30' 20' 10' 0

0 100' 200' 300'

NO.	DATE	REVISION

RICHARDSON SMITH GARDNER & ASSOCIATES
NC.L.P. NO. C-0293 (Engineering)
14 N. Boylan Ave. Raleigh, N.C. 27603
ph: 919-828-0577
fax: 919-828-3899
www.rsgengineers.com

SEAL

NORTH CAROLINA PROFESSIONAL SEAL 021068 ENGINEER PETER K. SMITH 6/4/10

PROJECT TITLE: DAVIDSON GAS PRODUCERS, LLC
HOLLY GROVE LANDFILL
LFG COLLECTION SYSTEM
CONSTRUCTION DRAWINGS

DRAWING TITLE: LANDFILL GAS HEADER PIPE
PLAN & PROFILE
(SHEET 1 OF 2)

DESIGNED BY: P.K.S.	DRAWN BY: C.T.J.
CHECKED BY:	PROJECT NO.: DTE 10-1
SCALE: AS SHOWN	DATE: JUNE 2010
FILE NAME: DTE-D0540	
SHEET NO. 3	DRAWING NO. LFG2

G:\CAD\Davidson\DTE 10-1\sheets\DTE-D0540.dwg - 6/4/2010 11:21 AM

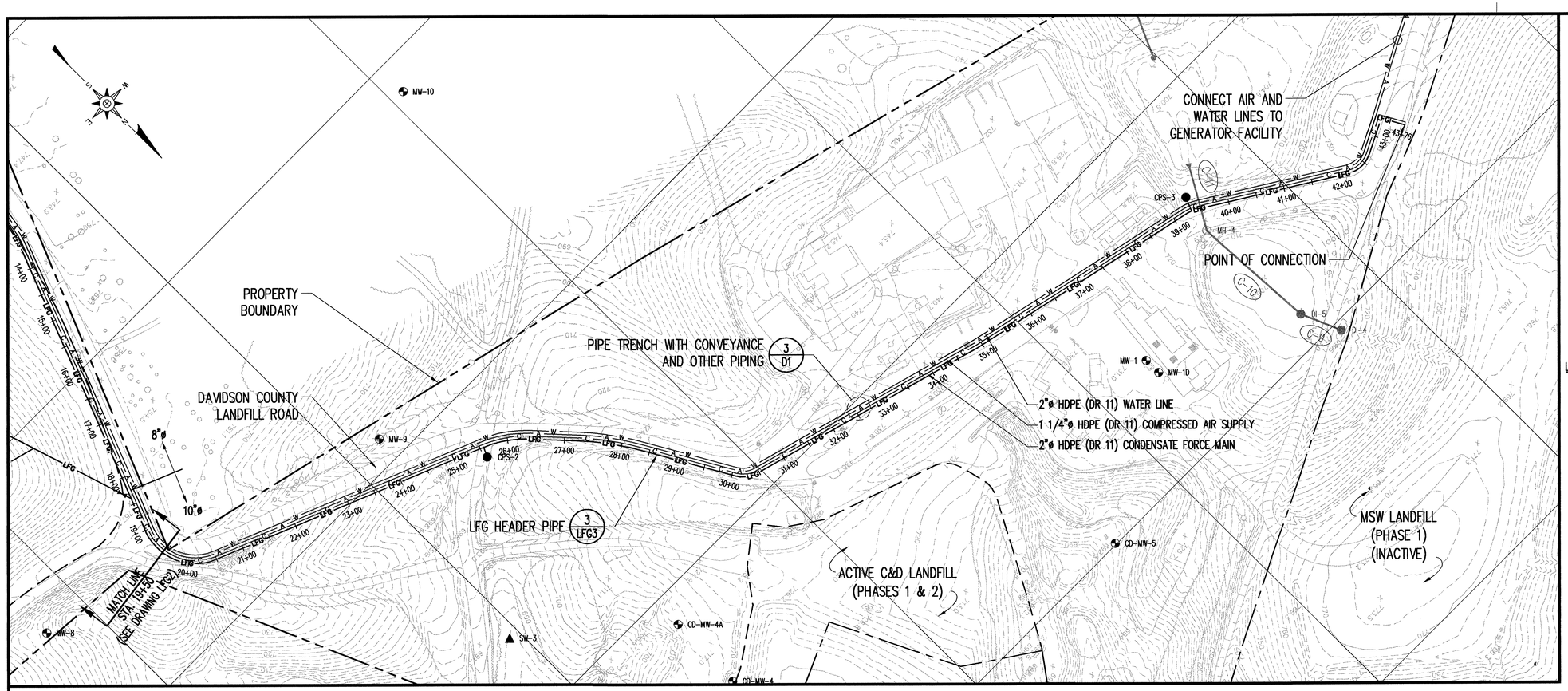

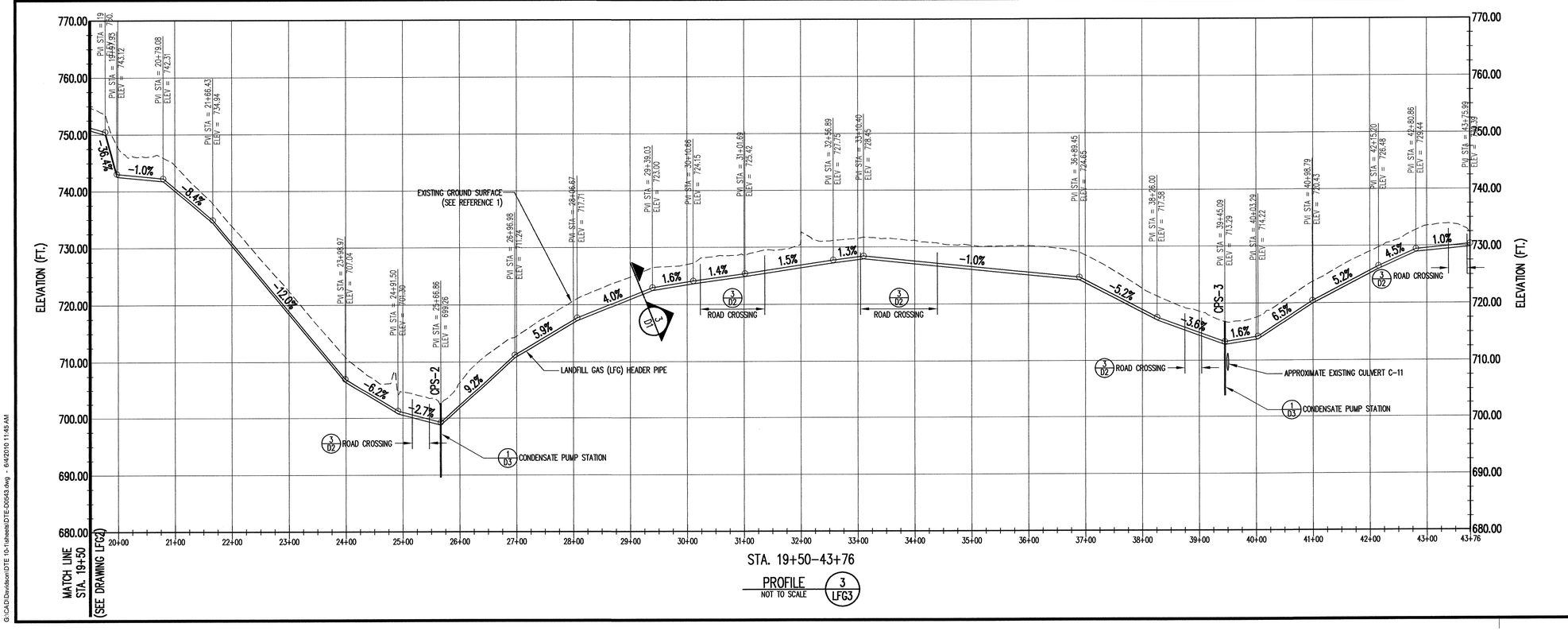

PROFILE 3/LFG3
NOT TO SCALE

LEGEND

- EXISTING 10' CONTOUR (SEE REFERENCE 1)
- EXISTING 2' CONTOUR
- PROPERTY LINE
- LIMIT OF LINER (EXISTING LINED UNITS)
- APPROXIMATE EXISTING WASTE LIMITS (UNLINED UNITS)
- LFG — LANDFILL GAS (LFG) HEADER PIPE (SEE NOTE 2)
- LANDFILL GAS (LFG) LATERAL PIPE
- C — 2"ø HDPE (DR 11) CONDENSATE FORCE MAIN
- A — 1 1/4"ø HDPE (DR 11) COMPRESSED AIR SUPPLY
- W — 2"ø HDPE (DR 11) WATER LINE
- ISOLATION VALVE
- MW-8D — EXISTING MONITORING WELL
- SW-3 — EXISTING SURFACE WATER SAMPLING POINT
- CS-1 — CONDENSATE SUMP
- EXISTING PASSIVE LFG VENT

0 100' 200' 300'

LEGEND

- EXISTING GROUND SURFACE (SEE REFERENCE 1)
- PROPOSED LANDFILL GAS HEADER PIPE

REFERENCES

1. OVERALL TOPOGRAPHY PER NORTH CAROLINA DEPARTMENT OF TRANSPORTATION, CONTOUR AND ELEVATION DATA GENERATED FROM LIGHT DETECTION AND RANGING (LIDAR) DATA OBTAINED FROM THE NORTH CAROLINA FLOOD MAPPING PROGRAM AND DATED SEPTEMBER 2004. TOPOGRAPHY IN C&D AND MSW AREAS FROM SPATIAL DATA, AERIAL DATED 5/13/09.
2. TOPOGRAPHY IN PHASE 1, AREA 1 AND 2, PROVIDED BY MICHAEL GREEN ASSOCIATES, SURVEY DATED 2/9/10.

30' 20' 10' 0

0 100' 200' 300'

NO.	DATE	REVISION

RICHARDSON SMITH GARDNER & ASSOCIATES
NC LIC. NO. C-0293 (Engineering)
14 N. Boylan Ave.
Raleigh, N.C. 27603
ph: 919-828-0577
fax: 919-828-3899
www.rsgengineers.com

SEAL

PROJECT TITLE: DAVIDSON GAS PRODUCERS, LLC
HOLLY GROVE LANDFILL
LFG COLLECTION SYSTEM
CONSTRUCTION DRAWINGS

DRAWING TITLE: LANDFILL GAS HEADER PIPE
PLAN & PROFILE
(SHEET 2 OF 2)

DESIGNED BY: P.K.S.	DRAWN BY: C.T.J.
CHECKED BY:	PROJECT NO.: DTE 10-1
SCALE: AS SHOWN	DATE: JUNE 2010
FILE NAME: DTE-D0543	
SHEET NO. 4	DRAWING NO. LFG3

G:\CAD\Davidson\DTE 10-1\sheets\DTE-D0543.dwg - 6/4/2010 11:45 AM

FOR BIDDING
NOT FOR CONSTRUCTION

SAFETY NOTE:
Contractor shall be solely responsible for initiating, maintaining and supervising all safety precautions and programs in connection with the Work. Contractor shall comply with all applicable Laws and Regulations relating to the safety of persons or property, or to the protection of persons or property from damage, injury, or loss; and shall erect and maintain all necessary safeguards for such safety and protection.

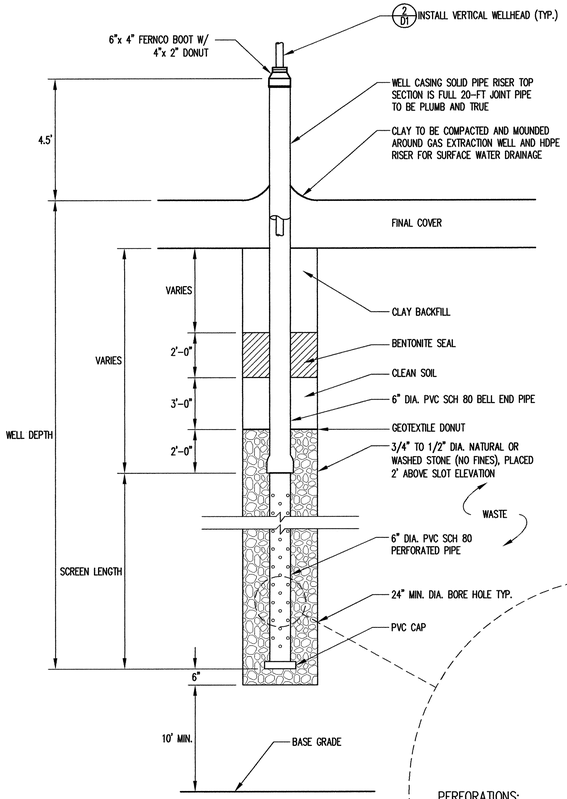

EXTRACTION WELL
DETAIL 1/D1
NOT TO SCALE

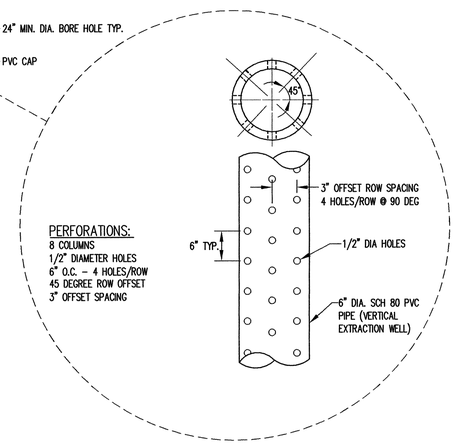

PERFORATIONS:
8 COLUMNS
1/2" DIAMETER HOLES
6" O.C. - 4 HOLES/ROW
45 DEGREE ROW OFFSET
3" OFFSET SPACING

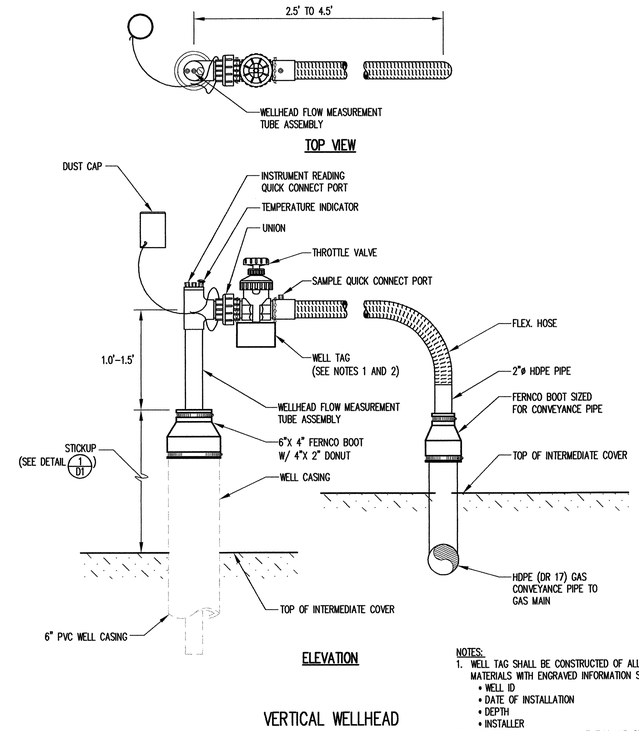

VERTICAL WELLHEAD
DETAIL 2/D1
NOT TO SCALE

NOTES:
1. WELL TAG SHALL BE CONSTRUCTED OF ALL WEATHER MATERIALS WITH ENGRAVED INFORMATION SHOWING:
   - WELL ID
   - DATE OF INSTALLATION
   - DEPTH
   - INSTALLER
2. WELL TAG SHALL BE PERMANENTLY AND SECURELY INSTALLED ON THE WELL CASING OR HANGING BY GALVANIZED CHAIN.

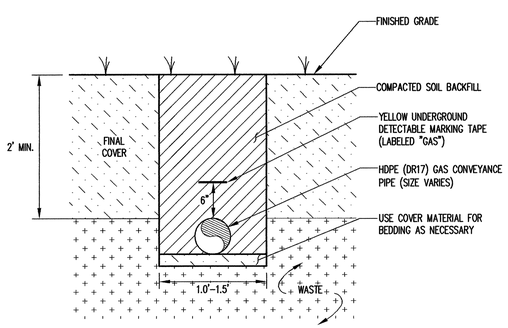

(AREA I)

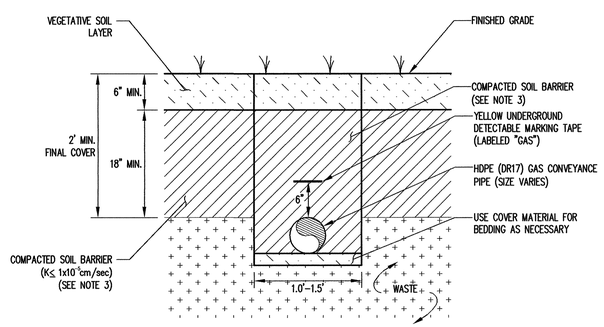

(AREA II SIDE SLOPES)

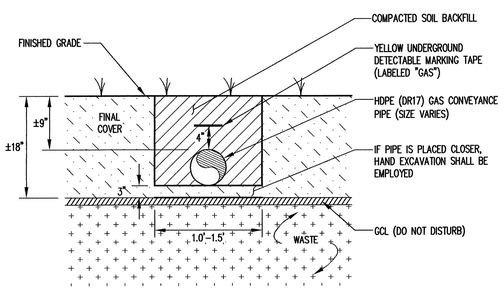

(AREA II TOP SLOPES)

NOTES:
1. ALL TRENCHES IN WASTE SHALL BE COVERED AT THE END OF EACH DAY SUCH THAT NO WASTE IS EXPOSED.
2. PLACE MARKERS EVERY 200' AND AT TURNS OUTSIDE OF WASTE AREAS.
3. PLACE COMPACTED SOIL BARRIER IN TRENCH IN 6" COMPACTED LIFTS.

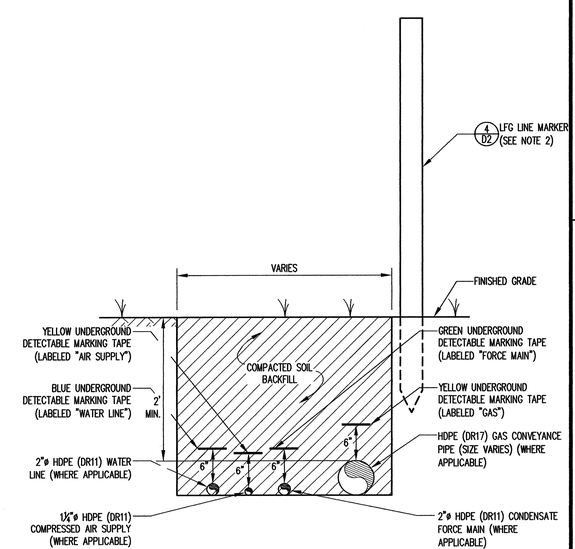

(OUTSIDE WASTE)

PIPE TRENCH WITH CONVEYANCE AND CONDENSATE PIPING
DETAIL 3/D1
NOT TO SCALE

NO.	DATE	REVISION

RICHARDSON SMITH GARDNER & ASSOCIATES
NC LICENSED Engineering
14 N. Boylan Ave.
Raleigh, N.C. 27603
ph: 919-828-0577
fax: 919-828-3899
www.rsgengineers.com

SEAL
NORTH CAROLINA PROFESSIONAL SEAL 021068 ENGINEER PETER K. SOBOL 12/7/10

PROJECT TITLE:
DAVIDSON GAS PRODUCERS, LLC
HOLLY GROVE LANDFILL
LFG COLLECTION SYSTEM
CONSTRUCTION DRAWINGS

DRAWING TITLE:
DETAILS
(SHEET 1 OF 3)

DESIGNED BY: P.K.S.	DRAWN BY: C.T.J.
CHECKED BY:	PROJECT NO.: DTE 10-1
SCALE: AS SHOWN	DATE: JUNE 2010
FILE NAME: DTE-D0541	
SHEET NO. 5	DRAWING NO. D1

G:\CAD\Davidson\DTE 10-1\sheets\DTE-D0541.dwg - 6/4/2010 11:54 AM

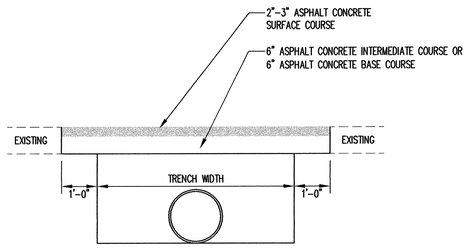

PAVEMENT REPAIRS ON ROADS NOT TO BE RESURFACED

DETAIL 1/D2
NOT TO SCALE

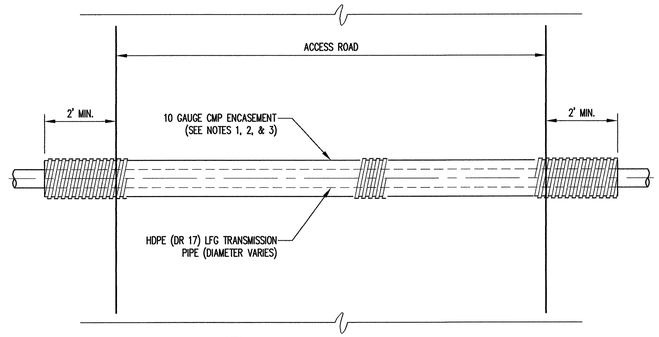

NOTES:
1. CMP ENCASEMENT DIAMETER SHALL BE AT LEAST 1.5x GAS PIPE DIAMETER.
2. MIN. 1.5 FT. COVER REQUIRED OVER CMP.
3. CONTRACTOR SHALL RESTORE ROAD TO ORIGINAL CONDITION, INCLUDING ASPHALT OR AGGREGATE SURFACING.
4. THE ENGINEER MAY APPROVE AN ALTERNATE DETAIL FOR ROAD CROSSINGS.

PIPE ENCASEMENT AT ROAD CROSSING

DETAIL 3/D2
NOT TO SCALE

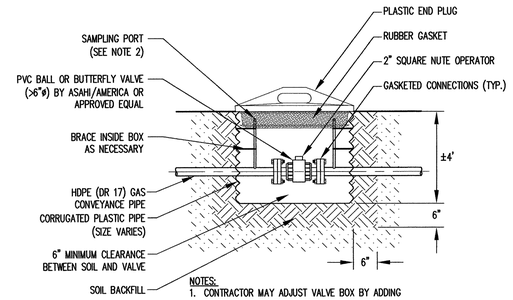

NOTES:
1. CONTRACTOR MAY ADJUST VALVE BOX BY ADDING SECTIONS OR BY EQUIVALENT DIAMETER PIPE. ALTERNATIVE VALVES OR VALVE BOXES MAY BE APPROVED BY ENGINEER.
2. SAMPLING PORT SHALL BE AS MANUFACTURED BY COLDER PRODUCTS COMPANY (PMC 12 SERIES QUICK CONNECT COUPLINGS).
3. ADD MARKER ADJACENT TO VALVE BOX PER DETAIL 4/D2.

ISOLATION VALVE

DETAIL 5/D2
NOT TO SCALE

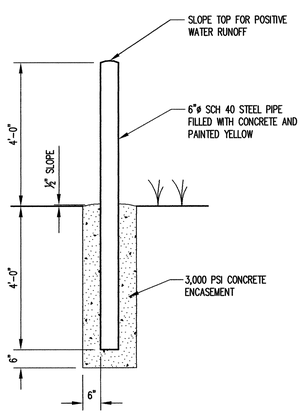

BOLLARD

DETAIL 2/D2
NOT TO SCALE

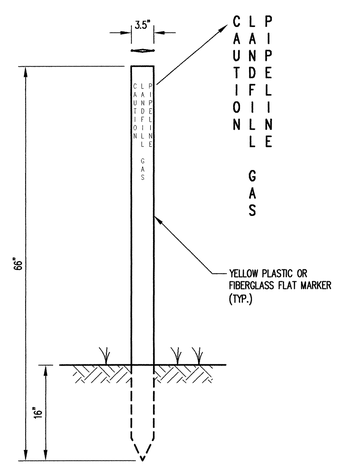

LFG LINE

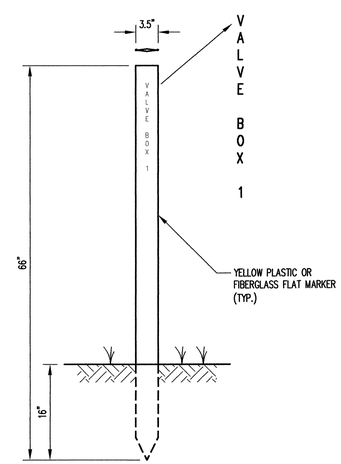

VALVE BOX

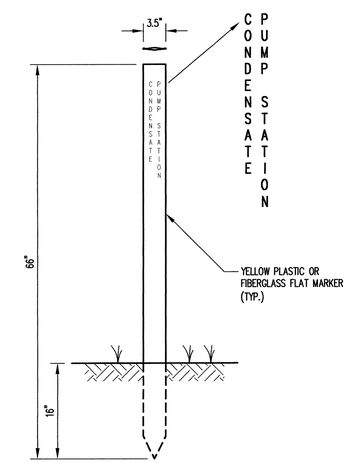

CONDENSATE PUMP STATION

MARKERS

DETAIL 4/D2
NOT TO SCALE

FOR BIDDING
NOT FOR CONSTRUCTION

SAFETY NOTE:
Contractor shall be solely responsible for initiating, maintaining and supervising all safety precautions and programs in connection with the Work. Contractor shall comply with all applicable Laws and Regulations relating to the safety of persons or property, or to the protection of persons or property from damage, injury, or loss; and shall erect and maintain all necessary safeguards for such safety and protection.

NO.	DATE	REVISION

RICHARDSON SMITH GARDNER & ASSOCIATES
Architecture Civil Engineering
14 N. Boylan Ave.
Raleigh, N.C. 27603
ph: 919-828-0577
fax: 919-828-3899
www.rsgengineers.com

SEAL

PROJECT TITLE:
DAVIDSON GAS PRODUCERS, LLC
HOLLY GROVE LANDFILL
LFG COLLECTION SYSTEM
CONSTRUCTION DRAWINGS

DRAWING TITLE:
DETAILS
(SHEET 2 OF 3)

DESIGNED BY: P.K.S.	DRAWN BY: C.T.J.
CHECKED BY:	PROJECT NO.: DTE 10-1
SCALE: AS SHOWN	DATE: JUNE 2010
FILE NAME: DTE-D0542	
SHEET NO. 6	DRAWING NO. D2

G:\CAD\Davidson\DTE 10-1\sheets\DTE-D0542.dwg - 6/4/2010 11:57 AM

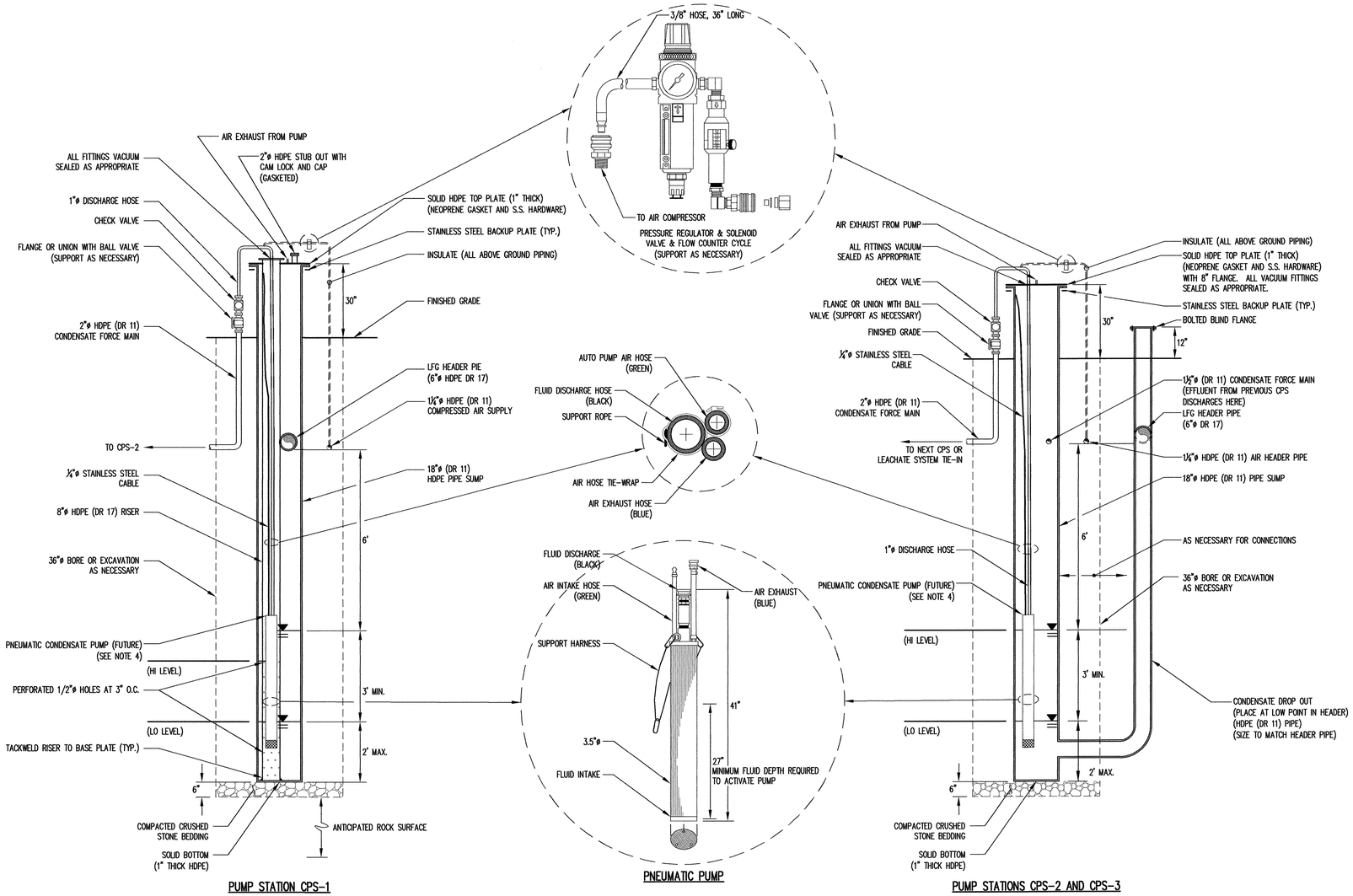

NOTES:
1. PIPES SHOWN ROTATED FOR CLARITY.
2. PLACE UP TO TWO (2) BOLLARDS AT EACH PUMP STATION AS DIRECTED BY THE OWNER. SEE DETAIL 2/D2.
3. ADD MARKER ADJACENT TO PUMP STATION PER DETAIL 4/D2.
4. CONDENSATE PUMPS AND RELATED APPURTENANCES WILL BE PROVIDED IN THE FUTURE BY DAVIDSON GAS PRODUCERS BASED ON CONDENSATE FLOW.

CONDENSATE PUMP STATIONS

DETAIL 1/D3
NOT TO SCALE

FOR BIDDING
NOT FOR CONSTRUCTION

SAFETY NOTE:
Contractor shall be solely responsible for initiating, maintaining and supervising all safety precautions and programs in connection with the Work. Contractor shall comply with all applicable Laws and Regulations relating to the safety of persons or property, or to the protection of persons or property from damage, injury, or loss; and shall erect and maintain all necessary safeguards for such safety and protection.

DATE	NO.	REVISION

RICHARDSON SMITH GARDNER & ASSOCIATES
A.E.P.G. NO. C-0910 & C-0910-3
14 N. Boylan Ave. Raleigh, N.C. 27603
ph: 919-828-0577
fax: 919-828-3899
www.rsgengineers.com

SEAL: NORTH CAROLINA PROFESSIONAL SEAL 021666 ENGINEER PETER K. SMITH 6/7/10

PROJECT TITLE: DAVIDSON GAS PRODUCERS, LLC
HOLLY GROVE LANDFILL
LFG COLLECTION SYSTEM
CONSTRUCTION DRAWINGS

DRAWING TITLE: DETAILS (SHEET 3 OF 3)

DESIGNED BY: P.K.S.	DRAWN BY: J.A.L.
CHECKED BY:	PROJECT NO.: DTE 10-1
SCALE: AS SHOWN	DATE: JUNE 2010
FILE NAME: DTE-D0544	
SHEET NO. 7	DRAWING NO. D3

G:\CAD\Davidson\DTE 10-1\sheets\DTE-D0544.dwg - 6/4/2010 12:08 PM