DENR USE ONLY: ☐ Paper Report ☐ Electronic Data - Email CD (data loaded: Yes / No) Doc/Event #:

NC DENR
Division of Waste Management - Solid Waste

Environmental Monitoring Reporting Form

Notice: This form and any information attached to it are "Public Records" as defined in NC General Statute 132-1. As such, these documents are available for inspection and examination by any person upon request (NC General Statute 132-6).

Instructions:

- **Prepare one form for each individually monitored unit.**
- **Please type or print legibly.**
- Attach a notification table with values that attain or exceed NC 2L groundwater standards or NC 2B surface water standards. The notification must include a preliminary analysis of the cause and significance of each value. (e.g. naturally occurring, off-site source, pre-existing condition, etc.).
- Attach a notification table of any groundwater or surface water values that equal or exceed the reporting limits.
- Attach a notification table of any methane gas values that attain or exceed explosive gas levels. This includes any structures on or nearby the facility (NCAC 13B .1629 (4)(a)(i).
- Send the original signed and sealed form, any tables, and Electronic Data Deliverable to: Compliance Unit, NCDENR-DWM, Solid Waste Section, 1646 Mail Service Center, Raleigh, NC 27699-1646.

Solid Waste Monitoring Data Submittal Information

Name of entity submitting data (laboratory, consultant, facility owner):

Golder Associates NC, Inc. on behalf of Republic Services of NC, LLC

Contact for questions about data formatting. Include data preparer's name, telephone number and E-mail address:

Name: Rachel P. Kirkman, P.G. Phone: 336-852-4903

E-mail: rkirkman@golder.com

Facility name:	Facility Address:	Facility Permit #	NC Landfill Rule: (.0500 or .1600)	Actual sampling dates (e.g., October 20-24, 2006)
East Carolina Environmental	1922 Republican Road Aulander, NC 27805	08-03	.1600	January 14-15, 2008

Environmental Status: (Check all that apply)

☐ Initial/Background Monitoring ☒ Detection Monitoring ☐ Assessment Monitoring ☐ Corrective Action

Type of data submitted: (Check all that apply)

☒ Groundwater monitoring data from monitoring wells
☒ Groundwater monitoring data from private water supply wells
☒ Leachate monitoring data
☒ Surface water monitoring data
☐ Methane gas monitoring data
☐ Corrective action data (specify) _____
☐ Other(specify)

Notification attached?

☒ No. No groundwater or surface water standards or explosive methane gas limits were exceeded.
☐ Yes, a notification of values exceeding a groundwater or surface water standard is attached. It includes a list of groundwater and surface water monitoring points, dates, analytical values, NC 2L groundwater standard, NC 2B surface water standard or NC Solid Waste GWPS and preliminary analysis of the cause and significance of any concentration.
☐ Yes, a notification of values exceeding an explosive methane gas limit is attached. It includes the methane monitoring points, dates, sample values and explosive methane gas limits.

Certification

To the best of my knowledge, the information reported and statements made on this data submittal and attachments are true and correct. Furthermore, I have attached complete notification of any sampling values meeting or exceeding groundwater standards or explosive gas levels, and a preliminary analysis of the cause and significance of concentrations exceeding groundwater standards. I am aware that there are significant penalties for making any false statement, representation, or certification including the possibility of a fine and imprisonment.

Rachel P. Kirkman, P.G.	Senior Project Geologist	336-852-4903
Facility Representative Name (Print)	Title	(Area Code) Telephone Number

Rachel P Kirkman 2-29-08

Signature Date

Affix NC Licensed/ Professional Geologist Seal

NORTH CAROLINA PROFESSIONAL GEOLOGIST SEAL 1011 Rachel P Kirkman 2-29-08

Revised 10/2006

Golder Associates NC, Inc.

4900 Koger Boulevard, Suite 140
Greensboro, NC 27407
Telephone (336) 852-4903
Fax (336) 852-4904

February 29, 2008

Project No. 053-6620008.100

Department of Environment and Natural Resources
Division of Waste Management
Solid Waste Section
401 Oberlin Road, Suite 150
Raleigh, North Carolina 27605
919-508-8520

Attention: Mr. Donald Herndon
Environmental Specialist

Re: Water Quality Monitoring Report, First Semi-Annual 2008 Sampling Event
East Carolina Regional Landfill, Permit No. 08-03
Bertie County, North Carolina

Dear Ervin:

On behalf of East Carolina Environmental, a subsidiary of Republic Services of NC, LLC (Republic), Golder Associates NC, Inc. (Golder) is submitting this *Water Quality Monitoring Report,* which documents the results of the January 14-15, 2008, compliance monitoring event at the above referenced facility.

Four NC Appendix I inorganic constituents (barium, beryllium, cobalt and zinc) were detected above their respective Solid Waste Section Limits (SWSLs) in one or more compliance monitoring wells during the January 2008 sampling event. Based on statistical evaluation, the reported concentrations do not exceed the calculated facility background concentrations for these constituents, and they are consistent with historical results. None of the detected inorganic constituents exceeded their respective NC Groundwater Quality (2L) Standards. No NC Appendix I organic constituents were detected above the SWSLs during this event. Downgradient compliance monitoring well GW-16 was replaced with GW-16R prior to the January 2008 sampling event, as part of the Cell 12 construction activities.

Zinc was detected above its SWSL in downstream surface water sampling point SW-2. However, no constituents were detected in surface water samples above their applicable Surface Water Standards. No surface water sample was collected from downstream sampling point SW-3 since no flowing water was present at the time of sampling. One inorganic constituent (zinc) was detected in the sample from the site water supply well above the SWSLs at a concentration below the applicable groundwater standard during this event, as it has been during previous events. Constituent concentrations reported for the leachate sample collected during the January 2008 sampling event are typical for this facility.

Based on these results, Republic will continue monitoring the uppermost aquifer beneath this facility in accordance with the requirements of the Detection Monitoring Program as outlined in Title 15A NCAC 13B.1633. If you have any questions, please contact the undersigned at 336-852-4903.

Sincerely,
GOLDER ASSOCIATES NC, INC.

Rachel P. Kirkman
for

David "Dusty" Y. Reedy II, P.G.
Project Hydrogeologist

Rachel P. Kirkman

Rachel P. Kirkman, P.G.
Senior Project Geologist

Enclosure

c: Ray Hoffman, P.E., Area Engineer, Republic Services of North Carolina, LLC, 1220 Commerce Street, SW, Hickory, North Carolina, 28613. HoffmanRJ@repsrvnc.com. 828-464-2414.
Bill Cooksey, General Manager, Republic Services, 1922 Republican Road, Aulander, NC, 27805. 252-348-3322.

G:\PROJECTS\REPUBLIC\EAST CAROLINA\GROUNDWATER\GWMR\JANUARY 2008\FINAL FIRST SEMI-ANNUAL 2008 EAST CAROLIONA GW EVENT.DOC

WATER QUALITY MONITORING REPORT
FIRST SEMI-ANNUAL 2008 SAMPLING EVENT

EAST CAROLINA REGIONAL LANDFILL, PERMIT NO. 08-03
BERTIE COUNTY, NORTH CAROLINA

FEBRUARY 2008

PREPARED FOR:

REPUBLIC SERVICES OF NORTH CAROLINA, LLC
1922 REPUBLICAN ROAD
AULANDER, NORTH CAROLINA 27805
252-348-3322

PREPARED BY:

GOLDER ASSOCIATES NC, INC.
4900 KOGER BOULEVARD, SUITE 140
GREENSBORO, NORTH CAROLINA 27407

PROJECT NO. 053-6620008.100

TABLE OF CONTENTS

1.0 INTRODUCTION 1

1.1 Site Description and Background 1
1.2 Compliance Monitoring History 1
1.3 Hydrogeologic Setting 2

2.0 FIELD PROGRAM, MONITORING RESULTS, AND DISCUSSION 3

2.1 Visual Inspection Program 3
2.2 Well Network and Groundwater Elevation Measurements 3
2.3 January 2008 Groundwater Monitoring Event 4
2.4 Laboratory Analysis Program 5
2.5 January 2008 Sampling Results 5

3.0 LABORATORY AND FIELD QA/QC 5

4.0 DATA EVALUATION 5

4.1 Statistical Evaluations 6
4.2 North Carolina Groundwater and Surface Water Quality Standard Comparisons 6

5.0 CONCLUSIONS 6

6.0 REFERENCES 6

TABLES

Table 1 Summary of Historical Static Water Level Data for Yorktown Formation
Table 2 Summary of Historical Static Water Level Data for Black Creek Formation
Table 3 Summary of Estimated Horizontal Flow Velocities
Table 4 Summary of Monitoring Well Construction Information
Table 5 Summary of Groundwater Monitoring Results
Table 6 Summary of Surface Water Monitoring Results
Table 7 Summary of Leachate Monitoring Results

DRAWING

Drawing 1 Yorktown Formation Groundwater Contour Map, January 14-15, 2008

APPENDICES

Appendix I Groundwater, Surface Water, and Leachate Sampling Logs
Appendix II January 2008 Certificates-of-Analysis, Chain-of-Custody Forms and Laboratory Data Review
Appendix III Statistical Evaluation Worksheets and Summary Table

1.0 INTRODUCTION

This report summarizes the monitoring results from the January 14-15, 2008, groundwater, surface water, supply well, and leachate sampling and analysis event at the East Carolina Regional Landfill in Bertie County, North Carolina in accordance with Title 15A of the North Carolina Administrative Code (NCAC) Subchapter 13B.1632. The East Carolina Regional Landfill, a municipal solid waste landfill, is owned and operated by Republic Services of North Carolina, LLC (Republic) under Permit No. 08-03 issued by the North Carolina Department of Environment and Natural Resources (DENR).

1.1 Site Description and Background

The East Carolina Regional Landfill is an active Subtitle D municipal solid waste landfill that began operating in 1993. As of January 2008, cells 3 through 11 have been constructed. The location of the facility is shown on the inlay on Drawing 1. As presented, the East Carolina Regional Landfill is located approximately 7.5 miles northwest of Windsor, North Carolina at the intersection of State Routes 1221 and 1225. The facility is bounded to the north and east by undeveloped property and the Connaritsa Swamp, to the west by State Route 1225 and undeveloped and agricultural property, and to the south by State Route 1221, wooded property and undeveloped bottomlands associated with the easterly flowing Cashie River.

Topographic elevations at the facility range from approximately 30 to 70 feet above mean sea level. Along the northern and eastern portions of the facility, surface drainage from the facility and surrounding areas is routed by drainage channels and storm water control structures to tributaries of the southerly flowing Connaritsa Swamp, a tributary system of the Cashie River. Along the western and southern portions of the facility, surface drainage from the facility and surrounding areas is routed by drainage channels and storm water control structures to tributaries of the southeasterly flowing Cashie River. The Cashie River discharges to the greater Roanoke River south of the Town of Windsor.

1.2 Compliance Monitoring History

Groundwater monitoring at the facility was initiated in January 1995 under the Detection Monitoring Program for municipal solid waste landfills. The facility's monitoring network has historically consisted of 14 monitoring wells (GW-1 through GW-14), which monitor the uppermost Yorktown Formation (GW-2, GW-3, GW-5, GW-7 through GW-11, GW-13, and GW-14), and the lower Black Creek Formation (GW-1, GW-4, GW-6, and GW-12). Monitoring wells GW-1 and GW-2 are located upgradient of the landfill, and the remaining wells are located sidegradient or downgradient of the landfill.

In accordance with the facility's permit, the current monitoring network is composed of GW-2, GW-7, GW-8, GW-9, GW-10, GW-11, GW-13, GW-14, GW-15, and GW-16R (Yorktown Formation) with the remaining monitoring wells used for static water level observation. Monitoring well GW-16 was decommissioned following the July 2007 sampling event during the construction of Cell 12. Bunnell Lammons Engineering, Inc. (BLE) installed monitoring well GW-16R as a replacement well prior to the January 2008 monitoring event. Per the June 2005 revision to the

Water Monitoring Procedures (BLE, 2005), the groundwater wells screened in the Black Creek Formation are no longer sampled. Based on the results of the laboratory and statistical analyses, Republic has continued to maintain a Detection Monitoring Program at this facility.

In addition to the routine groundwater monitoring points, the facility's monitoring network includes one upgradient surface water monitoring point (SW-1), and three downgradient surface water sampling points (SW-2, SW-3, and SW-4) which are sampled in conjunction with the groundwater monitoring wells. The leachate is also sampled semi-annually per the Solid Waste Section requirements.

1.3 Hydrogeologic Setting

Geologically, the facility is located within the Carolina Coastal Plain Physiographic Province of North Carolina (NCGS 1985). The Coastal Plain Province is generally described as being composed of easterly dipping strata that thicken towards the east. Based on hydrogeologic characteristics, these strata are generally classified as aquifer systems separated by aquitard units. The strata underlying the facility include the Tertiary Yorktown Formation and the Cretaceous Black Creek Formation, both of which are classified as aquifers. The Yorktown Formation is unconfined at this location, and the lower Black Creek Formation, which is separated from the overlying Yorktown Formation by a low permeability unit, is confined.

The uppermost groundwater beneath the facility is present in the shallow, unconfined Yorktown Aquifer. Depending on topographic elevation, the depth to water in the Yorktown Formation ranges from approximately 5 feet below grade along the southwestern perimeter of the facility to approximately 25 feet below grade near the central and northeastern portion of the facility. In the lower Black Creek Formation, the depth to water ranges from 10 to 20 feet below grade in the monitoring wells screened in this unit. Historical static water level data are presented on Tables 1 and 2.

As presented on Table 1, the hydraulic head level in the uppermost Yorktown aquifer beneath the facility is fairly consistent, with temporal variation from the long-term average limited to approximately 5 feet (plus or minus) in the upgradient well and somewhat less in the downgradient wells. Similarly, as presented in Table 2, the fluctuation in the Black Creek aquifer is limited to approximately 4 feet (plus or minus). As expected, the range in fluctuation appears to be greater in the upgradient wells, as these wells are more centrally located to the regional groundwater recharge area. The range in fluctuation in the downgradient compliance wells, which are generally located nearer groundwater discharge areas, is less, likely due to the stabilizing affect of hydraulic discharge boundaries.

Static water level measurements obtained on January 14-15, 2008, were used to prepare the groundwater contours presented on Drawing 1. In the upper Yorktown Formation, groundwater flow across most of the site is toward the south-southwest. An apparent groundwater divide is located near the northern cell boundary, and groundwater flow north of the landfill waste boundary is toward the north. This is consistent with previously submitted interpretations for this facility. Previous maps of the Black Creek Formation show an apparent flow direction towards the southeast.

Based on the January 14, 2008, groundwater surface contour map for the Yorktown Formation, the hydraulic gradient in the uppermost aquifer underlying the site was measured along the conceptual flow paths shown on Drawing 1. The average hydraulic gradient for the groundwater flowing to the south was calculated to be approximately 0.0021. The hydraulic gradient for groundwater flowing to the north was calculated to be approximately 0.0039 (Table 3). The permeability of the aquifer portion of the Yorktown Formation is estimated to average 3.3E-04 centimeters per second (BLE, 2004). The effective porosity of the shallow aquifer is estimated at 0.27 (BLE, 2004).

Using the above values, the estimated rate of groundwater flow for the uppermost aquifer beneath the facility was calculated using the following modified Darcy equation:

$$V_{gw} = Ki/n_e$$

where V_{gw} = average linear velocity (feet per year), K = hydraulic conductivity (feet per year), i = horizontal hydraulic gradient, and n_e = effective porosity.

The average estimated linear groundwater flow velocity under the waste management unit is approximately 3.22 feet per year generally to the south-southwest, which is consistent with previous estimates (Table 3).

2.0 FIELD PROGRAM, MONITORING RESULTS, AND DISCUSSION

Field activities conducted as part of the January 2008 sampling event are discussed in the following sections.

2.1 Visual Inspection Program

In order to ensure that a potential release is detected at the earliest possible time, the visual inspection program is used by sampling crews at the East Carolina Regional Landfill. This program includes physical indicators such as potential water table mounding beneath the waste management unit, physical examination of any stresses in biological communities, visible signs of leachate migration (i.e., leachate seeps), unexplained changes in soil characteristics, and any other change to the environment due to the waste management unit. During the January 2008 compliance monitoring event, no physical indicators were observed in the vicinity of the waste management areas.

2.2 Well Network and Groundwater Elevation Measurements

The network of groundwater monitoring wells at the East Carolina Regional Landfill consists of GW-2, GW-7, GW-8, GW-9, GW-10, GW-11, GW-13, GW-14, GW-15, and GW-16R, which are screened within the upper Yorktown Formation. The remaining monitoring wells are used as observation wells to monitor the depth to groundwater. Monitoring well construction information is summarized in Table 4 and the well locations are shown on Drawing 1. The network of monitoring wells was constructed to target the preferential flow path for groundwater underlying waste disposal areas.

Monitoring well GW-2 is the facility's background well and is located hydraulically upgradient of the waste disposal area. Monitoring wells GW-7, GW-8, GW-9, GW-10, GW-11, GW-13, GW-14,

GW-15, and GW-16R are located downgradient or sidegradient of the waste disposal area and represent the facility's downgradient compliance wells.

Depth-to-water measurements were recorded to the nearest 0.01 foot prior to initiating groundwater purging and sampling activities. The monitoring point summary and respective water level elevations for this event are presented in Tables 1 and 2.

2.3 January 2008 Groundwater Monitoring Event

Personnel from Golder visited the facility on January 14-15, 2008, to micro-purge and sample monitoring wells GW-2, GW-7, GW-8, GW-9, GW-10, GW-11, GW-13, GW-14, GW-15, and GW-16R. In addition to the groundwater samples, a groundwater sample was collected from the on-site water supply well and a leachate sample was collected from the facility's holding tank. Additional depth-to-water measurements were obtained from GW-1, GW-3, GW-4, GW-5, GW-6, and GW-12. Surface water samples were collected from SW-1 (upstream) and SW-2 and SW-4 (downstream) during this event. No flowing water was observed at surface water point SW-3; therefore no sample was collected.

Monitoring wells GW-2, GW-7, GW-8, GW-9, GW-10, GW-11, GW-13, GW-14, GW-15, and GW-16R were purged and sampled using the dedicated bladder pumps and micropurge procedures. Measurements of pH, specific conductivity, dissolved oxygen, oxidation-reduction potential, temperature, and turbidity were recorded on approximately 2 to 4-minute intervals during the purge, depending on the purge rate. In general, the purge rate for each well was matched to the yield of the monitoring well, as determined by continuously monitoring the depth to the water, up to a maximum purge rate of 500 milliliters per minute. Purging was continued until stabilization was indicated by the water quality parameters. In general, stabilization was deemed to be complete once the range in measured values for the required water quality parameters was less than 10% per parameter over three monitoring intervals.

Prior to sampling, the laboratory-supplied sample containers were prepared. Each sample container was labeled with the sample identification number, sampling personnel, date and time of sample collection, project name and number, and requested chemical analyses.

The required groundwater samples were collected directly from the dedicated bladder pump discharge lines in the labeled, laboratory-supplied, pre-preserved sample containers after purging was completed based on stabilization of all water quality parameters. After collection, the samples were placed in a cooler on ice, under chain-of-custody control. Copies of the sampling logs are presented in Appendix I. Included in each log is a description of the sampling location, sampling equipment, sampling method, field observations, and water quality measurements. During the course of the sampling event, purge water was containerized and disposed of in the facility's leachate collection system.

Surface water samples from were collected directly from the stream flow, by lowering the sample containers into the stream flow with the opening facing into the current flow, taking care to prevent the over flow of the sample containers and to minimize sample-induced turbidity. Measurements of pH, specific conductivity, dissolved oxygen, oxidation-reduction potential, temperature, and turbidity were recorded during the collection of surface water samples.

The leachate sample was collected directly from the leachate piping manifold that serves the leachate holding tank. Measurements of pH, specific conductivity, temperature, and turbidity were recorded during the collection of the leachate sample.

2.4 Laboratory Analysis Program

The January 2008 groundwater, surface water, and leachate samples were received by Environmental Conservation Laboratories, Inc. (ENCO) of Cary, North Carolina on January 15, 2008, under chain-of-custody control for analysis of the NC Appendix I constituents. The leachate sample was also analyzed for the required list of additional parameters.

2.5 January 2008 Sampling Results

Analytical results for the January 2008 groundwater, surface water, and leachate samples are summarized in Tables 5, 6, and 7 with available historical data. The laboratory certificates-of-analysis, chain-of-custody forms and laboratory data reviews for the sampling event are included in Appendix II.

As presented in Table 5, barium, cobalt, and zinc were detected in the upgradient well GW-2, above the Solid Waste Section Limits (SWSLs). Four inorganic constituents (barium, beryllium, cobalt, and zinc) were detected above their respective SWSLs in one or more downgradient wells.

As presented in Table 6, zinc was detected in SW-2 above its SWSL. Zinc was detected above its SWSL in the on-site water supply well (PW-1) during the January 2008 event, as it has been during previous events. This constituent is commonly found in water supply wells with galvanized casings, such as PW-1. Constituent concentrations reported for the leachate samples collected during the January 2008 sampling event are typical for leachate at this facility.

3.0 LABORATORY AND FIELD QA/QC

A field blank was collected by Golder personnel as part of the January 2008 groundwater, surface water, and leachate sampling event. In addition to the field blank, a laboratory-prepared trip blank accompanied the volatile sample containers to and from the laboratory. ENCO analyzed the field blank for the same constituents as the groundwater samples, and the trip blank for NC Appendix I volatile organic compounds. A review of the laboratory data was performed by Golder personnel.

Barium and zinc were detected in the field blank at estimated concentrations. Nitrate, copper and vanadium were detected in the method blanks at estimated concentrations. Based on Golder's review of the data, the following concentrations are considered blank-qualified and are appropriately flagged in Tables 5 and 6: the concentrations of zinc in GW-7, -8, -9, -10, -11, -13, -14, -15, and SW-4; the nitrate concentration in the leachate sample; copper concentrations in GW-7, -8, -9, -11, -13, -15, -16R, and PW-1; and the concentrations of vanadium in GW-2, -8, -9, -11, -14, -15, and SW-4.

4.0 DATA EVALUATION

The results of the data evaluations are presented in the following sections.

4.1 Statistical Evaluations

Barium, beryllium, cobalt, and zinc were detected in one or more downgradient monitoring wells above the SWSLs. Pursuant to the requirements of 15A NCAC 13B.1633, these concentrations were statistically evaluated in accordance with the procedures outlined in 15A NCAC 13B.1632(g) and (h) to determine if the reported concentration exceeded the facility background concentration. The statistical worksheets for barium, beryllium, cobalt, and zinc are presented in Appendix III including a summary table of the statistical results. As presented, the reported concentrations are below their respective background concentrations.

4.2 North Carolina Groundwater and Surface Water Quality Standard Comparisons

No inorganic or organic constituents were detected above their respective Groundwater Quality Standards (2L Standards) or Groundwater Protection Standards (GPS) during the January 2008 event. Also, no inorganic or organic constituents were detected above applicable Surface Water Standards.

5.0 CONCLUSIONS

During the January 2008 event, no inorganic constituents were detected at statistically significant concentrations and no organic constituents were detected above the SWSLs. Based on the results summarized herein, Republic will continue monitoring the uppermost aquifer beneath this facility in accordance with the requirements of the Detection Monitoring Program as outlined in Title 15A NCAC 13B.1633. The next compliance monitoring event for this facility is tentatively scheduled for July 2008.

6.0 REFERENCES

BLE (Bunnell-Lammons Engineering, Inc.), 2004. *Report of Ground Water Quality Results & Statistical Analysis, Second Semi-Annual Sampling Event of 2004 (N27) East Carolina Regional MSW Landfill, Bertie County, North Carolina.* December. 5 pp.

BLE (Bunnell-Lammons Engineering, Inc.), 2005. *Water Monitoring Procedures, June 2005 Revision.*

Law Engineering, 1996. Design Hydrogeologic Report Phase II (Cells 7 and 8). August. 15 pp.

NCGS (North Carolina Geologic Survey), 1985. Geologic Map of North Carolina. Scale 1:500,000.

TABLES

TABLE 1

Summary of Historical Static Water Level Data for Yorktown Formation
East Carolina Regional Landfill, Permit No. 08-03
Bertie County, North Carolina

	Monitoring Well												
	GW-2	**GW-3**	**GW-5**	**GW-7**	**GW-8**	**GW-9**	**GW-10**	**GW-11**	**GW-13**	**GW-14**	**GW-15**	**GW-16**	**GW-16R**
TOC Elevation (ft AMSL)	66.36	66.23	62.60	58.79	60.04	51.94	53.22	72.42	74.76	78.74	78.23	63.02	66.12
Date	**Static Water Elevation (ft AMSL)**												
01/01/95	51.79	54.53	48.45	47.12	46.43	47.89	-	-	-	-	-	-	NI
07/01/95	55.85	51.80	50.42	53.84	48.12	48.13	-	-	-	-	-	-	NI
01/01/96	58.36	53.73	51.42	49.89	49.09	49.43	-	-	-	-	-	-	NI
10/01/96	59.92	55.53	53.05	49.87	49.14	50.32	50.32	-	-	-	-	-	NI
04/01/97	57.00	51.96	50.85	47.77	47.50	49.15	49.67	50.20	-	-	-	-	NI
10/01/97	50.20	48.05	46.74	44.79	44.41	45.61	45.41	43.67	-	-	-	-	NI
04/01/98	55.12	51.65	50.52	47.78	47.26	48.01	47.00	44.22	-	-	-	-	NI
10/01/98	51.35	49.25	48.24	46.30	45.58	47.82	45.43	DRY	-	-	-	-	NI
04/07/99	53.54	51.25	50.01	48.15	47.50	47.45	45.85	DRY	-	-	-	-	NI
10/20/99	57.26	52.67	51.25	48.79	52.38	49.12	47.80	45.82	-	-	-	-	NI
04/26/00	54.03	50.93	49.56	48.02	47.52	47.46	45.75	DRY	-	-	-	-	NI
10/18/00	52.71	49.70	48.56	46.80	46.23	45.57	43.40	DRY	-	-	-	-	NI
04/18/01	53.54	50.36	48.94	47.37	46.85	46.32	43.93	DRY	48.31	-	-	-	NI
10/24/01	50.78	47.97	47.00	45.50	44.75	44.84	44.48	43.99	47.95	-	-	-	NI
04/22/02	51.64	49.10	47.94	46.92	46.38	45.67	46.46	46.07	49.30	-	-	-	NI
10/21/02	50.06	47.73	46.41	45.70	45.30	46.22	47.07	46.61	48.82	-	-	-	NI
04/01/03	56.58	51.55	50.37	48.69	48.07	48.30	49.81	48.94	53.08	-	-	-	NI
10/27/03	54.61	50.14	48.86	46.99	46.42	47.81	48.57	48.63	51.91	53.64	-	-	NI
04/26/04	55.24	50.59	49.25	47.69	47.10	48.45	48.82	48.74	52.02	54.55	-	-	NI
10/26/04	53.01	48.53	47.38	45.91	45.49	46.99	48.20	48.27	50.79	52.11	-	-	NI
03/15/05	54.56	49.40	47.93	46.88	46.57	47.72	48.48	48.42	51.96	54.34	-	-	NI
07/12/05	53.25	48.88	47.74	46.35	45.86	47.22	47.98	48.34	51.00	52.71	-	-	NI
01/19/06	55.12	49.82	48.23	46.81	46.60	48.28	48.74	48.40	51.66	53.92	53.10	-	NI
07/11/06	54.89	49.63	48.44	47.28	46.79	47.78	48.06	48.25	51.46	53.16	52.90	51.00	NI
01/17/07	56.09	51.21	47.81	48.67	48.00	49.68	48.67	48.28	52.23	54.74	53.59	53.11	NI
07/09/07	52.58	48.30	47.41	45.21	44.69	46.44	46.82	46.11	50.50	50.84	51.42	49.53	NI
01/14/08	50.15	46.67	45.64	44.76	44.95	46.45	<32.68	47.54	49.43	49.93	49.75	-	47.23
MEAN	*54.05*	*50.40*	*48.83*	*47.40*	*46.85*	*47.56*	*46.64*	*47.25*	*50.69*	*52.99*	*52.15*	*51.21*	*47.23*
MAXIMUM	*59.92*	*55.53*	*53.05*	*53.84*	*52.38*	*50.32*	*50.32*	*50.20*	*53.08*	*54.74*	*53.59*	*53.11*	*47.23*
MINIMUM	*50.06*	*46.67*	*45.64*	*44.76*	*44.41*	*44.84*	*<32.68*	*43.67*	*47.95*	*49.93*	*49.75*	*49.53*	*47.23*

Notes:
ft AMSL = feet above mean sea level
TOC = top of casing
- = not measured
NI = Not Installed
*MW-16 was decommissioned after the installation of MW-16R.

TABLE 2

Summary of Historical Static Water Level Data for Black Creek Formation
East Carolina Regional Landfill, Permit No. 08-03
Bertie County, North Carolina

	Monitoring Well			
	GW-1	**GW-4**	**GW-6**	**GW-12**
TOC Elevation (ft AMSL)	65.87	62.53	58.95	66.13
Date	**Static Water Elevation (ft AMSL)**			
01/01/95	48.13	47.31	47.78	51.62
07/01/95	51.12	49.35	49.95	49.51
01/01/96	51.98	49.68	50.10	49.89
10/01/96	53.44	51.38	51.85	51.70
04/01/97	53.46	51.00	51.60	51.38
10/01/97	47.00	46.10	46.44	46.24
04/01/98	52.44	50.03	50.33	50.29
10/01/98	48.24	48.23	48.00	47.70
04/07/99	51.94	49.27	49.64	49.50
10/20/99	52.13	49.56	49.45	49.83
04/26/00	52.15	49.13	49.60	49.37
10/18/00	51.04	48.09	48.49	48.36
04/18/01	52.14	48.40	48.81	48.64
10/24/01	48.58	46.29	46.73	48.20
04/22/02	50.40	47.41	47.85	49.45
10/21/02	48.08	45.93	46.37	45.93
04/01/03	53.40	49.65	50.18	49.75
10/27/03	52.07	48.91	49.32	49.03
04/26/04	52.83	49.05	49.66	49.16
10/26/04	50.57	47.45	48.00	47.54
03/15/05	53.10	48.31	48.96	48.47
07/12/05	50.96	47.51	48.29	47.82
01/19/06	52.27	48.24	48.85	48.40
07/11/06	50.95	47.82	48.30	47.92
01/17/07	52.62	48.11	49.95	49.14
07/09/07	49.96	46.83	47.34	46.80
01/14/08	47.41	45.14	45.64	45.02
MEAN	*51.05*	*48.30*	*48.80*	*48.77*
MAXIMUM	*53.46*	*51.38*	*51.85*	*51.70*
MINIMUM	*47.00*	*45.14*	*45.64*	*45.02*

Notes: ft AMSL = feet above mean sea level.
TOC = top of casing

TABLE 3

Summary of Estimated Horizontal Flow Velocities
East Carolina Regional Landfill, Permit No. 08-03
Bertie County, North Carolina

Yorktown Formation - January 2008							
Gradient Calculation Segment	**Flow Direction**	**Gradient Segment Length (feet)**	**Gradient Segment Elevations (feet)**	**Horizontal Gradient (i, feet)**	**Effective Porosity (n_e)**	**Hydraulic Conductivity (K, cm/sec)**	**Velocity (V_{gw}, feet/year)**
i_1	SSW	912	50 / 48	0.0022	0.27	3.30E-04	2.77
i_2	SW	1448	49 / 46	0.0021	0.27	3.30E-04	2.62
i_3	SSW	2518	50 / 45	0.0020	0.27	3.30E-04	2.51
i_4	NNE	255	50 / 49	0.0039	0.27	3.30E-04	4.96

Notes: Horizontal velocities based on the modified Darcy equation $V_{gw} = Ki/n_e$.
Values for K and n_e were taken from BLE's 2004 report referenced in the text.

TABLE 4

Summary of Well Construction Information
East Carolina Regional Landfill, Permit No. 08-03
Bertie County, North Carolina

Well Identification	Construction Date	Ground Surface Elevation (ft AMSL)	Measuring Point Elevation (ft AMSL)	Well Depth (feet)	Well Diameter (inches)	Screened Interval (ft AMSL)	Screened Geologic Formation
GW-1	1993	63.7	65.87	62	2	11.7 to 1.7	Black Creek Formation
GW-2	1993	64.00	66.36	26	2	48.0 to 38.0	Yorktown Formation
GW-3	1993	63.7	66.23	26	2	47.7 to 37.7	Yorktown Formation
GW-4	1993	60.7	62.53	59	2	11.7 to 1.7	Black Creek Formation
GW-5	1993	60.9	62.6	24	2	46.9 to 36.9	Yorktown Formation
GW-6	1993	57.5	58.95	63	2	4.5 to -5.5	Black Creek Formation
GW-7	1993	57.4	58.79	18	2	49.4 to 39.4	Yorktown Formation
GW-8	1993	58.6	60.04	18	2	50.6 to 40.6	Yorktown Formation
GW-9	1993	50.1	51.94	13	2	47.1 to 37.1	Yorktown Formation
GW-10	1996	50.4	53.22	22	2	38.4 to 28.4	Yorktown Formation
GW-11	1997	68.6	72.42	28	2	55.6 to 40.6	Yorktown Formation
GW-12	1993	63.7	66.13	54	2	19.7 to 9.7	Black Creek Formation
GW-13	2001	72.2	74.76	41.3	2	45.9 to 30.9	Yorktown Formation
GW-14	2003	76.7	78.74	47.8	2	38.9 to 28.9	Yorktown Formation
GW-15	2005	75.23	78.23	42.62	2	24.2 to 39.2	Yorktown Formation
GW-16R	2007	63.02	66.12	24.2	2	9.0 to 24.0	Yorktown Formation

Note: ft AMSL = feet above mean sea level

TABLE 5

Summary of Groundwater Monitoring Results
Detected Constituents
East Carolina Regional Landfill, Permit No. 08-03
Bertie County, North Carolina

Detected Monitoring Constituents/Parameters	Reporting Units	Sample Date	Detection Limit	Quantitation Limit	SWS Reporting Limit	Yorktown Formation													Black Creek Formation				Blanks
						Upgradient	Downgradient												Upgradient	Downgradient			
						GW-2	GW-3	GW-5	GW-7	GW-8	GW-9	GW-10	GW-11	GW-13	GW-14	GW-15	GW-16	GW-16R	GW-1	GW-4	GW-6	GW-12	
Arsenic	ug/L	07/12/05	--	--	10	ND	--	--	ND	ND	ND	ND	ND	ND	ND	--	--	--	--	--	--	--	ND
NC 2L = 50 ug/L	ug/L	01/19/06	--	--	10	ND	--	--	ND	ND	ND	ND	ND	ND	ND	--	--	--	--	--	--	--	ND
	ug/L	06/28/06	--	--	10	--	--	--	--	--	--	--	--	--	--	--	ND	--	--	--	--	--	ND
	ug/L	07/11/06	--	--	10	ND	--	--	ND	ND	ND	ND	ND	ND	ND	ND	ND	--	--	--	--	--	ND
	ug/L	10/31/06	2.0	10.0	10	--	--	--	--	--	--	--	--	--	--	ND	ND	--	--	--	--	--	ND
	ug/L	01/17/07	2.0	10.0	10	2.1 B	--	--	ND	2.1 B	ND	ND	2.1 B	ND	3.4 B	ND	ND	--	--	--	--	--	3.4 J
	ug/L	07/09/07	2.0	10.0	10	ND	--	--	ND	2.1 J	ND	ND	ND	ND	ND	ND	ND	--	--	--	--	--	ND
	ug/L	01/14/08	2.0	10.0	10	ND	--	--	ND	2.1 J	2.7 J	ND	2.3 J	ND	ND	ND	--	ND	--	--	--	--	ND
Barium	ug/L	10/28/98	--	--	500	ND	ND	ND	ND	ND	ND	ND	Dry	--	--	--	--	--	ND	ND	ND	ND	ND
NC 2L = 2000 ug/L	ug/L	04/07/99	--	--	500	ND	ND	ND	ND	ND	ND	ND	Dry	--	--	--	--	--	ND	ND	ND	ND	ND
	ug/L	12/08/99	--	--	500	ND	ND	ND	ND	ND	ND	ND	ND	--	--	--	--	--	ND	ND	ND	ND	ND
	ug/L	04/27/00	--	--	500	ND	ND	ND	ND	ND	ND	ND	Dry	--	--	--	--	--	ND	ND	ND	ND	ND
	ug/L	10/18/00	--	--	500	ND	ND	ND	ND	ND	ND	ND	Dry	ND	--	--	--	--	ND	ND	ND	ND	ND
	ug/L	11/28/00	--	--	500	--	--	--	--	--	--	--	--	ND	--	--	--	--	--	--	--	--	--
	ug/L	01/03/01	--	--	500	--	--	--	--	--	--	--	--	ND	--	--	--	--	--	--	--	--	--
	ug/L	02/08/01	--	--	500	--	--	--	--	--	--	--	--	ND	--	--	--	--	--	--	--	--	--
	ug/L	04/19/01	--	--	500	ND	ND	ND	ND	ND	--	ND	Dry	ND	--	--	--	--	ND	ND	ND	ND	ND
	ug/L	12/24/01	--	--	500	ND	ND	ND	ND	ND	ND	ND	ND	ND	--	--	--	--	ND	ND	ND	ND	ND
	ug/L	04/23/02	--	--	500	ND	ND	ND	ND	ND	ND	ND	ND	ND	--	--	--	--	ND	ND	ND	ND	ND
	ug/L	10/23/02	--	--	500	ND	ND	ND	ND	ND	ND	ND	ND	ND	--	--	--	--	ND	ND	ND	ND	ND
	ug/L	04/01/03	--	--	500	ND	ND	ND	ND	ND	ND	ND	ND	ND	--	--	--	--	ND	ND	ND	ND	ND
	ug/L	09/02/03	--	--	500	--	--	--	--	--	--	--	--	--	ND	--	--	--	--	--	--	--	--
	ug/L	10/28/03	--	--	500	ND	ND	ND	ND	ND	ND	ND	ND	ND	ND	--	--	--	ND	ND	ND	ND	ND
	ug/L	04/27/04	--	--	500	500	ND	ND	ND	ND	ND	ND	ND	ND	ND	--	--	--	ND	ND	ND	ND	ND
	ug/L	10/26/04	--	--	500	ND	ND	ND	ND	ND	ND	ND	ND	ND	ND	--	--	--	ND	ND	ND	ND	ND
	ug/L	03/15/05	--	--	500	500	--	--	ND	ND	ND	ND	ND	ND	ND	--	--	--	--	--	--	--	ND
	ug/L	07/12/05	--	--	500	ND	--	--	ND	ND	ND	ND	ND	ND	ND	--	--	--	--	--	--	--	ND
	ug/L	01/12/06	--	--	30	--	--	--	--	--	--	--	--	--	--	ND	--	--	--	--	--	--	ND
	ug/L	01/19/06	--	--	500	523	--	--	ND	ND	ND	ND	ND	ND	ND	--	--	--	--	--	--	--	ND
	ug/L	06/28/06	--	--	500	--	--	--	--	--	--	--	--	--	--	--	ND	--	--	--	--	--	ND
	ug/L	07/11/06	--	--	500	517	--	--	ND	ND	ND	ND	ND	ND	ND	ND	ND	--	--	--	--	--	ND
	ug/L	10/31/06	0.20	10.0	500	--	--	--	--	--	--	--	--	--	--	ND	ND	--	--	--	--	--	ND
	ug/L	01/17/07	0.20	10.0	100	516	--	--	122	137	82.1	95.7	17.8	273	34.0	98.3	29.0	--	--	--	--	--	0.30 J
	ug/L	07/09/07	0.20	10.0	100	448	--	--	162	121	93.5 J	89.3 J	20.8 J	259	36.3 J	114	31.1 J	--	--	--	--	--	0.80 J
	ug/L	01/14/08	0.20	10.0	100	405	--	--	129	127	59.0 J	94.6 J	18.5 J	291	37.1 J	117	--	38.0 J	--	--	--	--	0.30 J

TABLE 5

Summary of Groundwater Monitoring Results
Detected Constituents
East Carolina Regional Landfill, Permit No. 08-03
Bertie County, North Carolina

Detected Monitoring Constituents/Parameters	Reporting Units	Sample Date	Detection Limit	Quantitation Limit	SWS Reporting Limit	Yorktown Formation													Black Creek Formation				Blanks
						Upgradient	Downgradient												Upgradient	Downgradient			
						GW-2	GW-3	GW-5	GW-7	GW-8	GW-9	GW-10	GW-11	GW-13	GW-14	GW-15	GW-16	GW-16R	GW-1	GW-4	GW-6	GW-12	
Beryllium	ug/L	10/28/98	--	--	2	ND	ND	ND	ND	ND	ND	ND	Dry	--	--	--	--	--	ND	ND	ND	ND	ND
SWS GPS = 4 ug/L	ug/L	04/07/99	--	--	2	ND	ND	ND	2	ND	ND	ND	Dry	--	--	--	--	--	ND	ND	ND	ND	ND
	ug/L	12/08/99	--	--	2	ND	ND	ND	ND	ND	ND	ND	ND	--	--	--	--	--	ND	ND	ND	ND	ND
	ug/L	04/27/00	--	--	2	ND	ND	ND	ND	ND	ND	ND	Dry	--	--	--	--	--	ND	ND	ND	ND	ND
	ug/L	10/18/00	--	--	2	ND	ND	ND	ND	ND	ND	ND	Dry	ND	--	--	--	--	ND	ND	ND	ND	ND
	ug/L	11/28/00	--	--	2	--	--	--	--	--	--	--	--	ND	--	--	--	--	--	--	--	--	--
	ug/L	01/03/01	--	--	2	--	--	--	--	--	--	--	--	ND	--	--	--	--	--	--	--	--	--
	ug/L	02/08/01	--	--	2	--	--	--	--	--	--	--	--	4	--	--	--	--	--	--	--	--	--
	ug/L	04/19/01	--	--	2	ND	ND	ND	ND	ND	--	ND	Dry	ND	--	--	--	--	ND	ND	ND	ND	ND
	ug/L	12/24/01	--	--	2	ND	ND	ND	ND	ND	ND	ND	ND	ND	--	--	--	--	ND	ND	ND	ND	ND
	ug/L	04/23/02	--	--	2	ND	ND	ND	ND	ND	ND	ND	ND	ND	--	--	--	--	ND	ND	ND	ND	ND
	ug/L	10/23/02	--	--	2	ND	ND	ND	3	ND	ND	ND	ND	ND	--	--	--	--	ND	ND	ND	ND	ND
	ug/L	04/01/03	--	--	2	ND	ND	ND	ND	ND	ND	ND	ND	ND	--	--	--	--	ND	ND	ND	ND	ND
	ug/L	09/02/03	--	--	2	--	--	--	--	--	--	--	--	--	ND	--	--	--	--	--	--	--	--
	ug/L	10/28/03	--	--	2	ND	ND	ND	3	ND	ND	ND	ND	ND	ND	--	--	--	ND	ND	ND	ND	ND
	ug/L	04/27/04	--	--	2	ND	ND	ND	3	ND	ND	ND	ND	ND	ND	--	--	--	ND	ND	ND	ND	ND
	ug/L	10/26/04	--	--	2	ND	ND	ND	3	ND	ND	ND	ND	ND	ND	--	--	--	ND	ND	ND	ND	ND
	ug/L	03/15/05	--	--	2	ND	--	--	ND	ND	ND	ND	ND	ND	ND	--	--	--	--	--	--	--	ND
	ug/L	07/12/05	--	--	2	ND	--	--	2.2	ND	ND	ND	ND	ND	ND	--	--	--	--	--	--	--	ND
	ug/L	01/12/06	--	--	2	--	--	--	--	--	--	--	--	--	--	ND	--	--	--	--	--	--	ND
	ug/L	01/19/06	--	--	2	ND	--	--	2	ND	ND	ND	ND	ND	ND	--	--	--	--	--	--	--	ND
	ug/L	06/28/06	--	--	2	--	--	--	--	--	--	--	--	--	--	--	ND	--	--	--	--	--	ND
	ug/L	07/11/06	--	--	2	ND	--	--	ND	ND	ND	ND	ND	ND	ND	ND	ND	--	--	--	--	--	ND
	ug/L	10/31/06	0.70	1.00	2	--	--	--	--	--	--	--	--	--	--	ND	ND	--	--	--	--	--	ND
	ug/L	01/17/07	0.70	1.00	1	1.00	--	--	1.90	ND	ND	ND	ND	ND	ND	ND	ND	--	--	--	--	--	ND
	ug/L	07/09/07	0.70	1.00	1	0.70 J	--	--	1.90	ND	ND	ND	ND	ND	ND	ND	ND	--	--	--	--	--	ND
	ug/L	01/14/08	0.70	1.00	1	ND	--	--	1.50	ND	ND	ND	ND	ND	ND	ND	--	ND	--	--	--	--	ND
Cadmium	ug/L	10/28/98	--	--	1	ND	ND	ND	ND	ND	ND	ND	Dry	--	--	--	--	--	ND	ND	ND	ND	ND
NC 2L = 1.75 ug/L	ug/L	04/07/99	--	--	1	ND	ND	ND	ND	ND	ND	ND	Dry	--	--	--	--	--	ND	ND	ND	ND	ND
	ug/L	12/08/99	--	--	1	ND	ND	ND	ND	ND	ND	ND	ND	--	--	--	--	--	ND	ND	ND	ND	ND
	ug/L	04/27/00	--	--	1	ND	ND	ND	ND	ND	ND	ND	Dry	--	--	--	--	--	ND	ND	ND	ND	ND
	ug/L	10/18/00	--	--	1	ND	ND	ND	ND	ND	ND	ND	Dry	ND	--	--	--	--	ND	ND	ND	ND	ND
	ug/L	11/28/00	--	--	1	--	--	--	--	--	--	--	--	ND	--	--	--	--	--	--	--	--	--
	ug/L	01/03/01	--	--	1	--	--	--	--	--	--	--	--	5	--	--	--	--	--	--	--	--	--
	ug/L	02/08/01	--	--	1	--	--	--	--	--	--	--	--	ND	--	--	--	--	--	--	--	--	--
	ug/L	04/19/01	--	--	1	ND	ND	ND	ND	ND	--	ND	Dry	ND	--	--	--	--	ND	ND	ND	ND	ND
	ug/L	12/24/01	--	--	1	ND	ND	ND	ND	ND	ND	ND	ND	ND	--	--	--	--	ND	ND	ND	ND	ND
	ug/L	04/23/02	--	--	1	ND	ND	ND	ND	ND	ND	ND	ND	ND	--	--	--	--	ND	ND	ND	ND	ND
	ug/L	10/23/02	--	--	1	ND	ND	ND	ND	ND	ND	ND	ND	ND	--	--	--	--	ND	ND	ND	ND	ND
	ug/L	04/01/03	--	--	1	ND	ND	ND	ND	ND	ND	ND	ND	ND	--	--	--	--	ND	ND	ND	ND	ND
	ug/L	09/02/03	--	--	1	--	--	--	--	--	--	--	--	--	ND	--	--	--	--	--	--	--	--
	ug/L	10/28/03	--	--	1	ND	ND	ND	ND	ND	ND	ND	ND	ND	ND	--	--	--	ND	ND	ND	ND	ND
	ug/L	04/27/04	--	--	1	ND	ND	ND	ND	ND	ND	ND	ND	ND	ND	--	--	--	ND	ND	ND	ND	ND
	ug/L	10/26/04	--	--	1	ND	ND	ND	ND	ND	ND	ND	ND	ND	ND	--	--	--	ND	ND	ND	ND	ND
	ug/L	03/15/05	--	--	1	ND	--	--	ND	ND	ND	ND	ND	ND	ND	--	--	--	--	--	--	--	ND
	ug/L	07/12/05	--	--	1	ND	--	--	ND	ND	ND	ND	ND	ND	ND	--	--	--	--	--	--	--	ND
	ug/L	01/12/06	--	--	1	--	--	--	--	--	--	--	--	--	--	ND	--	--	--	--	--	--	ND
	ug/L	01/19/06	--	--	1	ND	--	--	ND	ND	ND	ND	ND	ND	ND	--	--	--	--	--	--	--	ND
	ug/L	06/28/06	--	--	1	--	--	--	--	--	--	--	--	--	--	--	ND	--	--	--	--	--	ND
	ug/L	07/11/06	--	--	1	ND	--	--	ND	ND	ND	ND	ND	ND	ND	ND	ND	--	--	--	--	--	ND
	ug/L	10/31/06	0.50	1.00	1	--	--	--	--	--	--	--	--	--	--	ND	ND	--	--	--	--	--	ND
	ug/L	01/17/07	0.50	1.00	1	ND	--	--	ND	ND	ND	ND	ND	ND	ND	ND	ND	--	--	--	--	--	ND
	ug/L	07/09/07	0.50	1.00	1	ND	--	--	ND	ND	ND	ND	ND	ND	ND	ND	ND	--	--	--	--	--	ND
	ug/L	01/14/08	0.50	1.00	1	ND	--	--	ND	ND	ND	ND	ND	ND	ND	ND	--	ND	--	--	--	--	ND

TABLE 5

Summary of Groundwater Monitoring Results
Detected Constituents
East Carolina Regional Landfill, Permit No. 08-03
Bertie County, North Carolina

Detected Monitoring Constituents/Parameters	Reporting Units	Sample Date	Detection Limit	Quantitation Limit	SWS Reporting Limit	Yorktown Formation													Black Creek Formation				Blanks
						Upgradient	Downgradient												Upgradient	Downgradient			
						GW-2	GW-3	GW-5	GW-7	GW-8	GW-9	GW-10	GW-11	GW-13	GW-14	GW-15	GW-16	GW-16R	GW-1	GW-4	GW-6	GW-12	
Chromium	ug/L	10/28/98	--	--	10	ND	ND	ND	ND	ND	ND	ND	Dry	--	--	--	--	--	ND	ND	ND	ND	ND
NC 2L = 50 ug/L	ug/L	04/07/99	--	--	10	ND	ND	ND	ND	ND	ND	ND	Dry	--	--	--	--	--	ND	ND	ND	ND	ND
	ug/L	12/08/99	--	--	10	ND	ND	ND	ND	ND	ND	ND	ND	--	--	--	--	--	ND	ND	ND	ND	ND
	ug/L	04/27/00	--	--	10	ND	ND	ND	ND	ND	ND	ND	Dry	--	--	--	--	--	ND	ND	ND	ND	ND
	ug/L	10/18/00	--	--	10	ND	ND	ND	ND	ND	ND	ND	Dry	ND	--	--	--	--	ND	ND	ND	ND	ND
	ug/L	11/28/00	--	--	10	--	--	--	--	--	--	--	--	ND	--	--	--	--	--	--	--	--	--
	ug/L	01/03/01	--	--	10	--	--	--	--	--	--	--	--	ND	--	--	--	--	--	--	--	--	--
	ug/L	02/08/01	--	--	10	--	--	--	--	--	--	--	--	ND	--	--	--	--	--	--	--	--	--
	ug/L	04/19/01	--	--	10	ND	ND	ND	ND	ND	--	ND	Dry	ND	--	--	--	--	ND	ND	ND	ND	ND
	ug/L	12/24/01	--	--	10	ND	ND	ND	ND	ND	ND	ND	ND	ND	--	--	--	--	ND	ND	ND	ND	ND
	ug/L	04/23/02	--	--	10	ND	ND	ND	ND	10	ND	ND	ND	ND	--	--	--	--	ND	ND	ND	ND	ND
	ug/L	10/23/02	--	--	10	ND	ND	ND	ND	ND	ND	ND	ND	ND	--	--	--	--	ND	ND	ND	ND	ND
	ug/L	04/01/03	--	--	10	ND	ND	ND	ND	10	ND	ND	ND	ND	--	--	--	--	ND	ND	ND	ND	ND
	ug/L	09/02/03	--	--	10	--	--	--	--	--	--	--	--	--	ND	--	--	--	--	--	--	--	--
	ug/L	10/28/03	--	--	10	ND	ND	ND	ND	ND	ND	ND	ND	ND	ND	--	--	--	ND	ND	ND	ND	ND
	ug/L	04/27/04	--	--	10	ND	ND	ND	ND	ND	ND	ND	ND	ND	ND	--	--	--	ND	ND	ND	ND	ND
	ug/L	10/26/04	--	--	10	ND	ND	ND	ND	10	ND	ND	ND	ND	ND	--	--	--	ND	ND	ND	ND	ND
	ug/L	03/15/05	--	--	10	ND	--	--	ND	ND	ND	ND	ND	ND	ND	--	--	--	--	--	--	--	ND
	ug/L	07/12/05	--	--	10	ND	--	--	ND	ND	ND	ND	ND	ND	ND	--	--	--	--	--	--	--	ND
	ug/L	01/12/06	--	--	10	--	--	--	--	--	--	--	--	--	--	ND	--	--	--	--	--	--	ND
	ug/L	01/19/06	--	--	10	ND	--	--	ND	ND	ND	ND	ND	ND	ND	--	--	--	--	--	--	--	ND
	ug/L	06/28/06	--	--	10	--	--	--	--	--	--	--	--	--	--	--	ND	--	--	--	--	--	ND
	ug/L	07/11/06	--	--	10	ND	--	--	ND	ND	ND	ND	ND	ND	ND	ND	ND	--	--	--	--	--	ND
	ug/L	10/31/06	2.0	10.0	10	--	--	--	--	--	--	--	--	--	--	ND	ND	--	--	--	--	--	ND
	ug/L	01/17/07	2.0	10.0	10	ND	--	--	ND	ND	ND	ND	4.3 J	ND	ND	ND	ND	--	--	--	--	--	ND
	ug/L	07/09/07	2.0	10.0	10	ND	--	--	ND	ND	ND	ND	2.5 J	ND	ND	ND	ND	--	--	--	--	--	ND
	ug/L	01/14/08	2.0	10.0	10	2.6 J	--	--	ND	ND	ND	ND	5.9 J	3.8 J	ND	ND	--	ND	--	--	--	--	ND
Cobalt	ug/L	10/28/98	--	--	10	ND	ND	ND	30	ND	ND	ND	Dry	--	--	--	--	--	ND	ND	ND	ND	ND
SWS GPS = 70 ug/L	ug/L	04/07/99	--	--	10	ND	ND	ND	20	ND	ND	ND	Dry	--	--	--	--	--	ND	ND	ND	ND	ND
	ug/L	12/08/99	--	--	10	10	ND	ND	20	ND	ND	ND	ND	--	--	--	--	--	ND	ND	ND	ND	ND
	ug/L	04/27/00	--	--	10	ND	ND	ND	30	ND	ND	ND	Dry	--	--	--	--	--	ND	ND	ND	ND	ND
	ug/L	10/18/00	--	--	10	ND	ND	ND	30	ND	ND	ND	Dry	30	--	--	--	--	ND	ND	ND	ND	ND
	ug/L	11/28/00	--	--	10	--	--	--	--	--	--	--	--	10	--	--	--	--	--	--	--	--	--
	ug/L	01/03/01	--	--	10	--	--	--	--	--	--	--	--	ND	--	--	--	--	--	--	--	--	--
	ug/L	02/08/01	--	--	10	--	--	--	--	--	--	--	--	ND	--	--	--	--	--	--	--	--	--
	ug/L	04/19/01	--	--	10	ND	ND	ND	30	ND	--	ND	Dry	ND	--	--	--	--	ND	ND	ND	ND	ND
	ug/L	12/24/01	--	--	10	ND	ND	ND	30	ND	ND	ND	ND	ND	--	--	--	--	ND	ND	ND	ND	ND
	ug/L	04/23/02	--	--	10	ND	ND	ND	30	ND	ND	ND	ND	ND	--	--	--	--	ND	ND	ND	ND	ND
	ug/L	10/23/02	--	--	10	ND	ND	ND	50	ND	ND	ND	ND	ND	--	--	--	--	ND	ND	ND	ND	ND
	ug/L	04/01/03	--	--	10	10	ND	ND	40	ND	ND	ND	ND	ND	--	--	--	--	ND	ND	ND	ND	ND
	ug/L	09/02/03	--	--	10	--	--	--	--	--	--	--	--	--	ND	--	--	--	--	--	--	--	--
	ug/L	10/28/03	--	--	10	ND	ND	ND	50	ND	ND	ND	ND	ND	ND	--	--	--	ND	ND	ND	ND	ND
	ug/L	04/27/04	--	--	10	ND	ND	ND	30	ND	ND	ND	ND	ND	ND	--	--	--	ND	ND	ND	ND	ND
	ug/L	10/26/04	--	--	10	ND	ND	ND	40	ND	ND	ND	ND	ND	ND	--	--	--	ND	ND	ND	ND	ND
	ug/L	03/15/05	--	--	10	10	--	--	36	ND	ND	ND	ND	ND	ND	--	--	--	--	--	--	--	ND
	ug/L	07/12/05	--	--	10	ND	--	--	40	ND	ND	ND	ND	ND	ND	--	--	--	--	--	--	--	ND
	ug/L	01/12/06	--	--	10	--	--	--	--	--	--	--	--	--	--	ND	--	--	--	--	--	--	ND
	ug/L	01/19/06	--	--	10	11.9	--	--	30	ND	ND	ND	ND	ND	ND	--	--	--	--	--	--	--	ND
	ug/L	06/28/06	--	--	10	--	--	--	--	--	--	--	--	--	--	--	ND	--	--	--	--	--	ND
	ug/L	07/11/06	--	--	10	12.5	--	--	31.6	ND	ND	ND	ND	ND	ND	ND	ND	--	--	--	--	--	ND
	ug/L	10/31/06	2.0	10.0	10	--	--	--	--	--	--	--	--	--	--	ND	ND	--	--	--	--	--	ND
	ug/L	01/17/07	2.0	10.0	10	10.3	--	--	34.9	3.9 J	ND	ND	ND	3.0 J	5.8 J	2.9 J	ND	--	--	--	--	--	ND
	ug/L	07/09/07	2.0	10.0	10	10.0	--	--	37.5	2.9 J	ND	ND	ND	ND	6.1 J	2.6 J	ND	--	--	--	--	--	ND
	ug/L	01/14/08	2.0	10.0	10	11.3	--	--	35.1	4.2 J	3.2 J	3.8 J	2.0 J	3.3 J	5.7 J	3.4 J	--	2.6 J	--	--	--	--	ND

TABLE 5

Summary of Groundwater Monitoring Results
Detected Constituents
East Carolina Regional Landfill, Permit No. 08-03
Bertie County, North Carolina

Detected Monitoring Constituents/Parameters	Reporting Units	Sample Date	Detection Limit	Quantitation Limit	SWS Reporting Limit	Yorktown Formation													Black Creek Formation				Blanks
						Upgradient	Downgradient												Upgradient	Downgradient			
						GW-2	GW-3	GW-5	GW-7	GW-8	GW-9	GW-10	GW-11	GW-13	GW-14	GW-15	GW-16	GW-16R	GW-1	GW-4	GW-6	GW-12	
Copper	ug/L	07/12/05	--	--	200	ND	--	--	ND	ND	ND	ND	ND	ND	ND	--	--	--	--	--	--	--	ND
NC 2L = 1000 ug/L	ug/L	01/19/06	--	--	200	ND	--	--	ND	ND	ND	ND	ND	ND	ND	--	--	--	--	--	--	--	ND
	ug/L	06/28/06	--	--	200	--	--	--	--	--	--	--	--	--	--	--	--	--	--	--	--	--	ND
	ug/L	07/11/06	--	--	200	ND	--	--	ND	ND	ND	ND	ND	ND	ND	ND	ND	--	--	--	--	--	ND
	ug/L	10/31/06	0.60	10.0	200	--	--	--	--	--	--	--	--	--	--	ND	ND	--	--	--	--	--	ND
	ug/L	01/17/07	0.60	10.0	10	ND	--	--	0.80 J	ND	ND	ND	ND	ND	ND	ND	ND	--	--	--	--	--	ND
	ug/L	07/09/07	0.60	10.0	10	ND	--	--	5.40 J	ND	ND	1.00 J	ND	ND	ND	ND	ND	--	--	--	--	--	ND
	ug/L	01/14/08	0.60	10.0	10	4.70 J	--	--	1.60 B	1.30 B	1.30 B	ND	1.00 B	0.80 B	ND	0.80 B	--	1.10 B	--	--	--	--	0.70 J
Lead	ug/L	10/28/98	--	--	10	ND	ND	ND	ND	ND	ND	ND	Dry	--	--	--	--	--	ND	ND	ND	ND	ND
NC 2L = 15 ug/L	ug/L	04/07/99	--	--	10	ND	ND	ND	ND	ND	ND	ND	Dry	--	--	--	--	--	ND	ND	ND	ND	ND
	ug/L	12/08/99	--	--	10	ND	ND	ND	ND	ND	ND	ND	ND	--	--	--	--	--	ND	ND	ND	ND	ND
	ug/L	04/27/00	--	--	10	ND	ND	ND	ND	ND	ND	ND	Dry	--	--	--	--	--	ND	ND	ND	ND	ND
	ug/L	10/18/00	--	--	10	ND	ND	ND	ND	ND	ND	ND	Dry	ND	--	--	--	--	ND	ND	ND	ND	ND
	ug/L	11/28/00	--	--	10	--	--	--	--	--	--	--	--	ND	--	--	--	--	--	--	--	--	--
	ug/L	01/03/01	--	--	10	--	--	--	--	--	--	--	--	ND	--	--	--	--	--	--	--	--	--
	ug/L	02/08/01	--	--	10	--	--	--	--	--	--	--	--	ND	--	--	--	--	--	--	--	--	--
	ug/L	04/19/01	--	--	10	ND	ND	ND	ND	ND	--	ND	Dry	ND	--	--	--	--	ND	ND	ND	ND	ND
	ug/L	12/24/01	--	--	10	ND	ND	ND	ND	ND	ND	ND	ND	ND	--	--	--	--	ND	ND	ND	ND	ND
	ug/L	04/23/02	--	--	10	ND	ND	ND	ND	ND	ND	ND	ND	ND	--	--	--	--	ND	ND	ND	ND	ND
	ug/L	10/23/02	--	--	10	ND	ND	ND	ND	ND	ND	ND	ND	ND	--	--	--	--	ND	ND	ND	ND	ND
	ug/L	04/01/03	--	--	10	ND	ND	ND	ND	ND	ND	ND	ND	ND	--	--	--	--	10	ND	ND	ND	ND
	ug/L	09/02/03	--	--	10	--	--	--	--	--	--	--	--	--	ND	--	--	--	--	--	--	--	--
	ug/L	10/28/03	--	--	10	ND	ND	ND	ND	ND	ND	ND	ND	ND	ND	--	--	--	ND	ND	ND	ND	ND
	ug/L	04/27/04	--	--	10	ND	ND	ND	ND	ND	ND	ND	ND	ND	ND	--	--	--	ND	ND	ND	ND	ND
	ug/L	10/26/04	--	--	10	ND	ND	ND	ND	ND	ND	ND	ND	ND	ND	--	--	--	ND	ND	ND	ND	ND
	ug/L	03/15/05	--	--	10	ND	--	--	ND	ND	ND	ND	ND	ND	ND	--	--	--	--	--	--	--	ND
	ug/L	07/12/05	--	--	10	ND	--	--	ND	ND	ND	ND	ND	ND	ND	--	--	--	--	--	--	--	ND
	ug/L	01/12/06	--	--	10	--	--	--	--	--	--	--	--	--	--	ND	--	--	--	--	--	--	ND
	ug/L	01/19/06	--	--	10	ND	--	--	ND	ND	ND	ND	ND	ND	ND	--	--	--	--	--	--	--	ND
	ug/L	06/28/06	--	--	10	--	--	--	--	--	--	--	--	--	--	--	ND	--	--	--	--	--	ND
	ug/L	07/11/06	--	--	10	ND	--	--	ND	ND	ND	ND	ND	ND	ND	ND	ND	--	--	--	--	--	ND
	ug/L	10/31/06	2.0	10.0	10	--	--	--	--	--	--	--	--	--	--	ND	ND	--	--	--	--	--	ND
	ug/L	01/17/07	2.0	10.0	10	ND	--	--	2.3 J	ND	ND	ND	ND	ND	ND	ND	2.3 J	--	--	--	--	--	ND
	ug/L	07/09/07	2.0	10.0	10	2.3 J	--	--	2.9 J	2.9 J	ND	ND	2.0 J	ND	ND	2.2 J	ND	--	--	--	--	--	ND
	ug/L	01/14/08	2.0	10.0	10	ND	--	--	ND	ND	ND	ND	ND	ND	ND	ND	--	ND	--	--	--	--	ND

TABLE 5

Summary of Groundwater Monitoring Results
Detected Constituents
East Carolina Regional Landfill, Permit No. 08-03
Bertie County, North Carolina

Detected Monitoring Constituents/Parameters	Reporting Units	Sample Date	Detection Limit	Quantitation Limit	SWS Reporting Limit	Yorktown Formation													Black Creek Formation				Blanks
						Upgradient	Downgradient												Upgradient	Downgradient			
						GW-2	GW-3	GW-5	GW-7	GW-8	GW-9	GW-10	GW-11	GW-13	GW-14	GW-15	GW-16	GW-16R	GW-1	GW-4	GW-6	GW-12	
Nickel	ug/L	10/28/98	--	--	50	ND	ND	ND	ND	ND	ND	ND	Dry	--	--	--	--	--	ND	ND	ND	ND	ND
NC 2L = 100 ug/L	ug/L	04/07/99	--	--	50	ND	ND	ND	ND	ND	ND	ND	Dry	--	--	--	--	--	ND	ND	ND	ND	ND
	ug/L	12/08/99	--	--	50	ND	ND	ND	ND	ND	ND	ND	ND	--	--	--	--	--	ND	ND	ND	90	ND
	ug/L	04/27/00	--	--	50	ND	ND	ND	ND	ND	ND	ND	Dry	--	--	--	--	--	ND	ND	ND	ND	ND
	ug/L	10/18/00	--	--	50	ND	ND	ND	ND	ND	ND	ND	Dry	ND	--	--	--	--	ND	ND	ND	ND	ND
	ug/L	11/28/00	--	--	50	--	--	--	--	--	--	--	--	ND	--	--	--	--	--	--	--	--	--
	ug/L	01/03/01	--	--	50	--	--	--	--	--	--	--	--	ND	--	--	--	--	--	--	--	--	--
	ug/L	02/08/01	--	--	50	--	--	--	--	--	--	--	--	ND	--	--	--	--	--	--	--	--	--
	ug/L	04/19/01	--	--	50	ND	ND	ND	ND	ND	--	ND	Dry	ND	--	--	--	--	ND	ND	ND	ND	ND
	ug/L	12/24/01	--	--	50	ND	ND	ND	ND	ND	ND	ND	ND	ND	--	--	--	--	ND	ND	ND	ND	ND
	ug/L	04/23/02	--	--	50	ND	ND	ND	ND	ND	ND	ND	ND	ND	--	--	--	--	ND	ND	ND	ND	ND
	ug/L	10/23/02	--	--	50	ND	ND	ND	ND	ND	ND	ND	ND	ND	--	--	--	--	ND	ND	ND	ND	ND
	ug/L	04/01/03	--	--	50	ND	ND	ND	ND	20	ND	ND	ND	ND	--	--	--	--	ND	ND	ND	ND	ND
	ug/L	09/02/03	--	--	50	--	--	--	--	--	--	--	--	--	ND	--	--	--	--	--	--	--	--
	ug/L	10/28/03	--	--	50	ND	ND	ND	ND	ND	ND	ND	ND	ND	ND	--	--	--	ND	ND	ND	ND	ND
	ug/L	04/27/04	--	--	50	ND	ND	ND	ND	ND	ND	ND	ND	ND	ND	--	--	--	ND	ND	ND	ND	ND
	ug/L	10/26/04	--	--	50	ND	ND	ND	ND	ND	ND	ND	ND	ND	ND	--	--	--	ND	ND	ND	ND	ND
	ug/L	03/15/05	--	--	50	ND	--	--	ND	ND	ND	ND	ND	ND	ND	--	--	--	--	--	--	--	ND
	ug/L	07/12/05	--	--	50	ND	--	--	ND	ND	ND	ND	ND	ND	ND	--	--	--	--	--	--	--	ND
	ug/L	01/12/06	--	--	50	--	--	--	--	--	--	--	--	--	--	ND	--	--	--	--	--	--	ND
	ug/L	01/19/06	--	--	50	ND	--	--	ND	ND	ND	ND	ND	ND	ND	--	--	--	--	--	--	--	ND
	ug/L	06/28/06	--	--	50	--	--	--	--	--	--	--	--	--	--	--	ND	--	--	--	--	--	ND
	ug/L	07/11/06	--	--	50	ND	--	--	ND	ND	ND	ND	ND	ND	ND	ND	ND	--	--	--	--	--	ND
	ug/L	10/31/06	2.0	10.0	50	--	--	--	--	--	--	--	--	--	--	ND	ND	--	--	--	--	--	ND
	ug/L	01/17/07	2.0	10.0	50	7.4 J	--	--	10.4	3.7 J	4.1 J	ND	ND	3.0 J	2.8 J	3.6 J	ND	--	--	--	--	--	ND
	ug/L	07/09/07	2.0	10.0	50	6.0 J	--	--	9.1 J	3.8 J	2.0 J	ND	ND	2.3 J	ND	2.5 J	ND	--	--	--	--	--	ND
	ug/L	01/14/08	2.0	10.0	50	11.0 J	--	--	8.0 J	5.8 J	3.7 J	2.0 J	3.2 J	4.7 J	3.6 J	3.8 J	--	ND	--	--	--	--	ND
Selenium	ug/L	07/12/05	--	--	20	ND	--	--	ND	ND	ND	ND	ND	ND	ND	--	--	--	--	--	--	--	ND
NC 2L = 50 ug/L	ug/L	01/19/06	--	--	20	ND	--	--	ND	ND	ND	ND	ND	ND	ND	--	--	--	--	--	--	--	ND
	ug/L	06/28/06	--	--	20	--	--	--	--	--	--	--	--	--	--	--	ND	--	--	--	--	--	ND
	ug/L	07/11/06	--	--	20	ND	--	--	ND	ND	ND	ND	ND	ND	ND	ND	ND	--	--	--	--	--	ND
	ug/L	10/31/06	2.0	10.0	20	--	--	--	--	--	--	--	--	--	--	ND	ND	--	--	--	--	--	ND
	ug/L	01/17/07	2.0	10.0	10	ND	--	--	ND	ND	ND	ND	ND	ND	ND	ND	5.7 J	--	--	--	--	--	ND
	ug/L	07/09/07	2.0	10.0	10	ND	--	--	ND	ND	ND	2.0 J	ND	ND	ND	ND	ND	--	--	--	--	--	ND
	ug/L	01/14/08	2.0	10.0	10	2.3 J	--	--	ND	2.0 J	ND	ND	ND	ND	ND	2.3 J	--	ND	--	--	--	--	ND
Silver	ug/L	07/12/05	--	--	10	ND	--	--	ND	ND	ND	ND	ND	ND	ND	--	--	--	--	--	--	--	ND
NC 2L = 17.5 ug/L	ug/L	01/19/06	--	--	10	ND	--	--	ND	ND	ND	ND	ND	ND	ND	--	--	--	--	--	--	--	ND
	ug/L	06/28/06	--	--	10	--	--	--	--	--	--	--	--	--	--	--	ND	--	--	--	--	--	ND
	ug/L	07/11/06	--	--	10	ND	--	--	ND	ND	ND	ND	ND	ND	ND	ND	ND	--	--	--	--	--	ND
	ug/L	10/31/06	2.0	10.0	10	--	--	--	--	--	--	--	--	--	--	ND	ND	--	--	--	--	--	ND
	ug/L	01/17/07	2.0	10.0	10	ND	--	--	ND	ND	ND	ND	ND	ND	ND	ND	ND	--	--	--	--	--	ND
	ug/L	07/09/07	2.0	10.0	10	ND	--	--	ND	ND	ND	ND	ND	ND	ND	ND	ND	--	--	--	--	--	ND
	ug/L	01/14/08	2.0	10.0	10	2.1 J	--	--	ND	ND	3.1 J	ND	ND	ND	ND	2.1 J	--	ND	--	--	--	--	ND
Thallium	ug/L	07/12/05	--	--	10	ND	--	--	ND	ND	ND	ND	ND	ND	ND	--	--	--	--	--	--	--	ND
SWS GPS = 0.28 ug/L	ug/L	01/19/06	--	--	10	ND	--	--	ND	ND	ND	ND	ND	ND	ND	--	--	--	--	--	--	--	ND
	ug/L	06/28/06	--	--	10	--	--	--	--	--	--	--	--	--	--	--	ND	--	--	--	--	--	ND
	ug/L	07/11/06	--	--	10	ND	--	--	ND	ND	ND	ND	ND	ND	ND	ND	ND	--	--	--	--	--	ND
	ug/L	10/31/06	4.0	10.0	10	--	--	--	--	--	--	--	--	--	--	ND	ND	--	--	--	--	--	ND
	ug/L	01/17/07	0.044	0.050	5.5	0.070 J	--	--	0.049 J	ND	ND	ND	ND	0.045 J	ND	ND	ND	--	--	--	--	--	ND
	ug/L	07/09/07	0.036	0.050	6	0.065 J	--	--	0.050 J	0.058 J	0.054 J	ND	ND	0.060 J	ND	ND	0.040 J	--	--	--	--	--	ND
	ug/L	01/14/08	0.036	1.00	6	0.077 J	--	--	0.069 J	ND	ND	ND	ND	0.063 J	ND	ND	--	ND	--	--	--	--	ND

TABLE 5

Summary of Groundwater Monitoring Results
Detected Constituents
East Carolina Regional Landfill, Permit No. 08-03
Bertie County, North Carolina

Detected Monitoring Constituents/Parameters	Reporting Units	Sample Date	Detection Limit	Quantitation Limit	SWS Reporting Limit	Yorktown Formation													Black Creek Formation				Blanks
						Upgradient	Downgradient												Upgradient	Downgradient			
						GW-2	GW-3	GW-5	GW-7	GW-8	GW-9	GW-10	GW-11	GW-13	GW-14	GW-15	GW-16	GW-16R	GW-1	GW-4	GW-6	GW-12	
Vanadium	ug/L	07/12/05	--	--	40	ND	--	--	ND	ND	ND	ND	ND	ND	ND	--	--	--	--	--	--	--	ND
SWS GPS = 3.5 ug/L	ug/L	01/19/06	--	--	40	ND	--	--	ND	ND	ND	ND	ND	ND	ND	--	--	--	--	--	--	--	ND
	ug/L	06/28/06	--	--	40	--	--	--	--	--	--	--	--	--	--	--	ND	--	--	--	--	--	ND
	ug/L	07/11/06	--	--	40	ND	--	--	ND	ND	ND	ND	ND	ND	ND	ND	ND	--	--	--	--	--	ND
	ug/L	10/31/06	1.0	10.0	40	--	--	--	--	--	--	--	--	--	--	ND	ND	--	--	--	--	--	ND
	ug/L	01/17/07	1.0	10.0	25	ND	--	--	ND	ND	ND	ND	ND	1.0 J	1.2 J	1.1 J	ND	--	--	--	--	--	ND
	ug/L	07/09/07	1.0	10.0	25	ND	--	--	ND	ND	1.5 B	ND	ND	ND	ND	ND	ND	--	--	--	--	--	1.0 J
	ug/L	01/14/08	1.0	10.0	25	1.6 B	--	--	ND	1.1 B	2.7 B	ND	2.0 B	ND	1.2 B	1.0 B	--	ND	--	--	--	--	1.0 J
Zinc	ug/L	10/28/98	--	--	50	ND	ND	ND	ND	ND	ND	ND	Dry	--	--	--	--	--	ND	ND	ND	ND	ND
NC 2L = 1050 ug/L	ug/L	04/07/99	--	--	50	50	30	ND	40	30	ND	ND	Dry	--	--	--	--	--	30	30	70	20	30
	ug/L	12/08/99	--	--	50	ND	ND	180	40	80	ND	60	30	--	--	--	--	--	ND	50	30	140	ND
	ug/L	04/27/00	--	--	50	90	140	50	70	ND	150	ND	Dry	--	--	--	--	--	50	70	ND	ND	ND
	ug/L	10/18/00	--	--	50	ND	ND	60	ND	ND	ND	ND	Dry	ND	--	--	--	--	ND	ND	60	60	ND
	ug/L	11/28/00	--	--	50	--	--	--	--	--	--	--	--	60	--	--	--	--	--	--	--	--	--
	ug/L	01/03/01	--	--	50	--	--	--	--	--	--	--	--	ND	--	--	--	--	--	--	--	--	--
	ug/L	02/08/01	--	--	50	--	--	--	--	--	--	--	--	ND	--	--	--	--	--	--	--	--	--
	ug/L	04/19/01	--	--	50	ND	ND	ND	ND	ND	--	ND	Dry	ND	--	--	--	--	ND	ND	ND	ND	ND
	ug/L	12/24/01	--	--	50	ND	ND	ND	ND	ND	ND	ND	ND	ND	--	--	--	--	ND	ND	ND	ND	ND
	ug/L	04/23/02	--	--	50	ND	ND	ND	ND	ND	ND	ND	ND	ND	--	--	--	--	ND	ND	ND	ND	ND
	ug/L	10/23/02	--	--	50	ND	ND	ND	ND	ND	90	ND	ND	ND	--	--	--	--	ND	ND	ND	ND	ND
	ug/L	04/01/03	--	--	50	110	60	90	120	50	90	50	70	40	--	--	--	--	30	60	40	30	30
	ug/L	09/02/03	--	--	50	--	--	--	--	--	--	--	--	--	ND	--	--	--	--	--	--	--	--
	ug/L	10/28/03	--	--	50	ND	ND	ND	ND	ND	ND	ND	ND	ND	ND	--	--	--	ND	ND	ND	ND	ND
	ug/L	04/27/04	--	--	50	ND	ND	ND	ND	ND	ND	ND	ND	ND	ND	--	--	--	ND	ND	ND	ND	ND
	ug/L	10/26/04	--	--	50	ND	ND	ND	ND	ND	ND	ND	ND	ND	ND	--	--	--	ND	ND	ND	ND	ND
	ug/L	03/15/05	--	--	50	ND	--	--	ND	ND	ND	ND	ND	ND	ND	--	--	--	--	--	--	--	ND
	ug/L	07/12/05	--	--	50	ND	--	--	ND	ND	ND	ND	ND	ND	ND	--	--	--	--	--	--	--	ND
	ug/L	01/12/06	--	--	50	--	--	--	--	--	--	--	--	--	--	ND	--	--	--	--	--	--	ND
	ug/L	01/19/06	--	--	50	ND	--	--	ND	ND	ND	ND	ND	ND	ND	--	--	--	--	--	--	--	ND
	ug/L	06/28/06	--	--	50	--	--	--	--	--	--	--	--	--	--	--	ND	--	--	--	--	--	ND
	ug/L	07/11/06	--	--	50	ND	--	--	ND	ND	ND	ND	ND	ND	ND	ND	ND	--	--	--	--	--	ND
	ug/L	10/31/06	1.0	10.0	50	--	--	--	--	--	--	--	--	--	--	ND	ND	--	--	--	--	--	ND
	ug/L	01/17/07	1.0	10.0	10	18.8 B	--	--	23.3 B	12.2 B	12.7 B	5.9 B	10.4 B	15.6 B	11.2 B	7.7 B	8.1 B	--	--	--	--	--	5.5 J
	ug/L	07/09/07	1.0	10.0	10	8.3 J	--	--	21.5	3.9 J	4.8 J	4.4 J	ND	3.9 J	3.4 J	5.2 J	3.7 J	--	--	--	--	--	ND
	ug/L	01/14/08	1.0	10.0	10	13.3	--	--	5.7 B	4.1 B	6.0 B	2.9 B	5.2 B	4.8 B	5.9 B	3.7 B	--	13.6	--	--	--	--	1.3 J
Chloroform	ug/L	07/12/05	--	--	5	ND	--	--	ND	ND	ND	ND	ND	ND	ND	--	--	--	--	--	--	--	ND
NC 2L = 70 ug/L	ug/L	01/19/06	--	--	5	ND	--	--	ND	ND	ND	ND	ND	ND	ND	--	--	--	--	--	--	--	ND
	ug/L	06/28/06	0.40	1.0	5	--	--	--	--	--	--	--	--	--	--	--	ND	--	--	--	--	--	ND
	ug/L	07/11/06	0.40	1.0	5	ND	--	--	ND	ND	ND	ND	ND	ND	ND	ND	ND	--	--	--	--	--	ND
	ug/L	10/31/06	0.40	1.0	5	--	--	--	--	--	--	--	--	--	--	ND	ND	--	--	--	--	--	ND
	ug/L	01/17/07	0.16	1.0	5	ND	--	--	ND	ND	ND	ND	0.63 J	ND	ND	ND	1.6 J	--	--	--	--	--	ND
	ug/L	07/09/07	0.16	1.0	5	ND	--	--	ND	ND	ND	ND	0.37 J	ND	ND	ND	1.2 J	--	--	--	--	--	ND
	ug/L	01/14/08	0.16	1.0	5	ND	--	--	ND	ND	ND	ND	0.62 J	ND	ND	ND	--	0.54 J	--	--	--	--	ND
Trichloroethene	ug/L	07/12/05	--	--	5	ND	--	--	ND	ND	ND	ND	ND	ND	ND	--	--	--	--	--	--	--	ND
NC 2L = 2.8 ug/L	ug/L	01/19/06	--	--	5	ND	--	--	ND	ND	ND	ND	ND	ND	ND	--	--	--	--	--	--	--	ND
	ug/L	06/28/06	0.4	1.0	5	--	--	--	--	--	--	--	--	--	--	--	ND	--	--	--	--	--	ND
	ug/L	07/11/06	--	--	5	ND	--	--	ND	ND	ND	ND	ND	ND	ND	ND	ND	--	--	--	--	--	ND
	ug/L	10/31/06	0.40	1.0	5	--	--	--	--	--	--	--	--	--	--	ND	ND	--	--	--	--	--	ND
	ug/L	01/17/07	0.23	1.0	3	ND	--	--	ND	ND	ND	ND	ND	ND	ND	ND	ND	--	--	--	--	--	ND
	ug/L	07/09/07	0.23	1.0	1	0.47 J	--	--	ND	0.35 J	ND	ND	ND	ND	ND	ND	ND	--	--	--	--	--	ND
	ug/L	01/14/08	0.23	1.0	1	ND	--	--	ND	ND	ND	ND	ND	ND	ND	ND	--	ND	--	--	--	--	ND

TABLE 5

Summary of Groundwater Monitoring Results
Detected Constituents
East Carolina Regional Landfill, Permit No. 08-03
Bertie County, North Carolina

Detected Monitoring Constituents/Parameters	Reporting Units	Sample Date	Detection Limit	Quantitation Limit	SWS Reporting Limit	Yorktown Formation													Black Creek Formation				Blanks
						Upgradient	Downgradient												Upgradient	Downgradient			
						GW-2	GW-3	GW-5	GW-7	GW-8	GW-9	GW-10	GW-11	GW-13	GW-14	GW-15	GW-16	GW-16R	GW-1	GW-4	GW-6	GW-12	
pH (Field)	S.U.	10/28/98	--	--	--	5.38	5.77	5.63	4.61	5.58	5.76	6.63	Dry	--	--	--	--	--	6.69	6.14	6.53	6.68	--
	S.U.	04/07/99	--	--	--	5.14	5.61	5.71	4.6	5.38	5.66	6.32	Dry	--	--	--	--	--	6.45	6.28	6.97	6.67	--
	S.U.	12/08/99	--	--	--	5.11	5.43	5.2	6.31	5.2	5.30	6.02	7.5	--	--	--	--	--	6.55	5.89	8.37	6.48	--
	S.U.	04/27/00	--	--	--	5.06	5.19	5.38	4.5	5.28	5.64	5.84	Dry	--	--	--	--	--	6.62	6.13	6.4	6.46	--
	S.U.	10/18/00	--	--	--	4.93	5.22	5.29	4.19	5.04	5.41	6.04	Dry	6.00	--	--	--	--	6.29	5.82	6.12	6.28	--
	S.U.	11/28/00	--	--	--	--	--	--	--	--	--	--	--	4.24	--	--	--	--	--	--	--	--	--
	S.U.	01/03/01	--	--	--	--	--	--	--	--	--	--	--	5.83	--	--	--	--	--	--	--	--	--
	S.U.	02/08/01	--	--	--	--	--	--	--	--	--	--	--	5.94	--	--	--	--	--	--	--	--	--
	S.U.	04/19/01	--	--	--	4.98	5.35	5.24	4.26	5.07	--	6.27	Dry	5.76	--	--	--	--	6.42	5.84	6.15	6.38	--
	S.U.	12/24/01	--	--	--	5.13	5.38	5.44	4.27	5.03	5.57	6.41	5.46	5.19	--	--	--	--	6.66	6.06	6.33	6.53	--
	S.U.	04/23/02	--	--	--	4.97	5.22	5.26	4.24	4.91	5.40	6.50	5.05	4.89	--	--	--	--	6.21	5.75	5.95	6.13	--
	S.U.	10/23/02	--	--	--	4.62	4.8	4.95	4.02	4.67	5.03	6.05	4.9	5.00	--	--	--	--	6.01	5.7	5.76	6.1	--
	S.U.	04/01/03	--	--	--	4.92	5.09	5.24	4.26	4.99	5.46	6.25	5.41	5.28	--	--	--	--	6.49	5.95	6.21	6.11	--
	S.U.	09/02/03	--	--	--	--	--	--	--	--	--	--	--	--	5.54	--	--	--	--	--	--	--	--
	S.U.	10/28/03	--	--	--	4.74	5.44	5.28	4.13	5.01	5.31	6.29	5.13	4.97	5.55	--	--	--	6.26	5.95	5.92	6.68	--
	S.U.	04/27/04	--	--	--	4.70	5.23	5.30	4.19	4.70	5.08	6.03	5.16	4.59	5.35	--	--	--	6.41	5.92	6.2	6.35	--
	S.U.	10/26/04	--	--	--	4.45	4.65	4.74	3.97	4.49	5.05	5.73	4.74	4.55	4.66	--	--	--	6.24	5.4	5.8	6.1	--
	S.U.	03/15/05	--	--	--	4.70	--	--	4.21	5.04	5.32	6.03	5.26	4.78	5.73	--	--	--	--	--	--	--	--
	S.U.	07/12/05	--	--	--	4.15	--	--	4.17	4.88	4.73	5.60	4.85	4.33	5.53	--	--	--	--	--	--	--	--
	S.U.	01/19/06	--	--	--	2.69	--	--	2.38	5.05	4.68	6.58	3.56	5.76	6.72	--	--	--	--	--	--	--	--
	S.U.	06/28/06	--	--	--	--	--	--	--	--	--	--	--	--	--	--	5.27	--	--	--	--	--	--
	S.U.	07/11/06	--	--	--	4.64	--	--	4.23	4.94	5.17	5.67	5.17	4.81	5.24	5.13	4.98	--	--	--	--	--	--
	S.U.	10/31/06	--	--	--	--	--	--	--	--	--	--	--	--	--	4.67	4.62	--	--	--	--	--	--
	S.U.	01/17/07	--	--	--	4.01	--	--	4.10	4.72	5.14	6.04	5.18	4.67	5.20	4.89	4.83	--	--	--	--	--	--
	S.U.	07/09/07	--	--	--	4.31	--	--	4.18	5.00	5.20	6.08	4.98	4.65	5.12	4.84	4.72	--	--	--	--	--	--
	S.U.	01/14/08	--	--	--	4.34	--	--	4.25	4.88	5.42	5.77	5.27	4.99	5.29	5.18	--	5.08	--	--	--	--	--
Specific Conductance (Field)	uS/cm	10/28/98	--	--	--	83	44	59	257	98	78	115	Dry	--	--	--	--	--	132	63	91	120	--
	uS/cm	04/07/99	--	--	--	69.41	33.61	44.91	173	75.21	52.07	67.89	Dry	--	--	--	--	--	85.82	46.13	68.52	82.16	--
	uS/cm	12/08/99	--	--	--	61	17	98	306	52	89	48	41	--	--	--	--	--	33	102	83	47	--
	uS/cm	04/27/00	--	--	--	78	34	48	210	87	57	57	Dry	--	--	--	--	--	96	49	72	86	--
	uS/cm	10/18/00	--	--	--	110	48	67	317	130	76	108	Dry	--	--	--	--	--	143	69	104	125	--
	uS/cm	11/28/00	--	--	--	--	--	--	--	--	--	--	--	191	--	--	--	--	--	--	--	--	--
	uS/cm	01/03/01	--	--	--	--	--	--	--	--	--	--	--	7.3	--	--	--	--	--	--	--	--	--
	uS/cm	02/08/01	--	--	--	--	--	--	--	--	--	--	--	75	--	--	--	--	--	--	--	--	--
	uS/cm	04/19/01	--	--	--	106	50	64	284	130	--	125	Dry	5.77	--	--	--	--	143	67	101	121	--
	uS/cm	12/24/01	--	--	--	85	37	50	224	105	71	104	46	80	--	--	--	--	115	53	79	96	--
	uS/cm	04/23/02	--	--	--	112	53	65	282	136	84	131	62	156	--	--	--	--	145	69	101	120	--
	uS/cm	10/23/02	--	--	--	62	30	36	161	77	49	75	37	41	--	--	--	--	82	38	57	67	--
	uS/cm	04/01/03	--	--	--	71	35	52	131	86	54	72	43	83	--	--	--	--	82	46	62	66	--
	uS/cm	09/02/03	--	--	--	--	--	--	--	--	--	--	--	--	43	--	--	--	--	--	--	--	--
	uS/cm	10/28/03	--	--	--	84	37	43	221	89	64	85	38	93	38	--	--	--	100	45	69	87	--
	uS/cm	04/27/04	--	--	--	99	66	61	227	108	82	102	53	118	67	--	--	--	99	66	90	100	--
	uS/cm	10/26/04	--	--	--	110	54	57	259	115	95	122	51	97	25	--	--	--	124	60	91	99	--
	uS/cm	03/15/05	--	--	--	108	--	--	223	94	79	97	47	91	38	--	--	--	--	--	--	--	--
	uS/cm	07/12/05	--	--	--	106	--	--	231	98	84	88	49	91	46	--	--	--	--	--	--	--	--
	uS/cm	01/19/06	--	--	--	103	--	--	214	100	66	98	47	89	42	--	--	--	--	--	--	--	--
	uS/cm	06/28/06	--	--	--	--	--	--	--	--	--	--	--	--	--	--	59	--	--	--	--	--	--
	uS/cm	07/11/06	--	--	--	147	--	--	307	146	121	129	70	126	60	106	35	--	--	--	--	--	--
	uS/cm	10/31/06	--	--	--	--	--	--	--	--	--	--	--	--	--	90	23	--	--	--	--	--	--
	uS/cm	01/17/07	--	--	--	136	--	--	291	164	112	132	52	98	42	92	18	--	--	--	--	--	--
	uS/cm	07/09/07	--	--	--	134	--	--	268	133	115	109	54	89	44	92	23	--	--	--	--	--	--
	uS/cm	01/14/08	--	--	--	212	--	--	442	208	128	279	120	252	165	248	--	53	--	--	--	--	--

TABLE 5

Summary of Groundwater Monitoring Results
Detected Constituents
East Carolina Regional Landfill, Permit No. 08-03
Bertie County, North Carolina

Detected Monitoring Constituents/Parameters	Reporting Units	Sample Date	Detection Limit	Quantitation Limit	SWS Reporting Limit	Yorktown Formation													Black Creek Formation				Blanks
						Upgradient	Downgradient												Upgradient	Downgradient			
						GW-2	GW-3	GW-5	GW-7	GW-8	GW-9	GW-10	GW-11	GW-13	GW-14	GW-15	GW-16	GW-16R	GW-1	GW-4	GW-6	GW-12	
Temperature (Field)	°C	10/28/98	--	--	--	15.3	17	17.9	19	19.7	18.6	15.9	Dry	--	--	--	--	--	14.9	17.3	17.3	16.7	--
	°C	04/07/99	--	--	--	16.7	17	17.6	17.3	17.3	15.6	17.6	Dry	--	--	--	--	--	16.5	18.2	18.1	16.7	--
	°C	12/08/99	--	--	--	15.1	16.2	17.7	17	25	17.1	16.7	17	--	--	--	--	--	15.2	16.8	17.2	15.1	--
	°C	04/27/00	--	--	--	15.6	15.7	16	13.1	14.4	13.7	12.9	Dry	--	--	--	--	--	15.7	16.1	15.9	15.8	--
	°C	10/18/00	--	--	--	16.7	17.4	18.2	19.1	19.3	20.4	16.6	Dry	--	--	--	--	--	16.7	17.9	17.6	16.8	--
	°C	11/28/00	--	--	--	--	--	--	--	--	--	--	--	15.6	--	--	--	--	--	--	--	--	--
	°C	01/03/01	--	--	--	--	--	--	--	--	--	--	--	14.5	--	--	--	--	--	--	--	--	--
	°C	02/08/01	--	--	--	--	--	--	--	--	--	--	--	16.9	--	--	--	--	--	--	--	--	--
	°C	04/19/01	--	--	--	14.9	15.2	16.3	31	14.7	--	13.7	Dry	17.1	--	--	--	--	15.5	16.8	17	16.5	--
	°C	12/24/01	--	--	--	17.9	19.2	20	20.2	20.7	20.8	17.7	20.1	21.6	--	--	--	--	17.7	20.6	19.8	18.6	--
	°C	04/23/02	--	--	--	15.9	17	16.7	16	15.7	15.6	14.5	18.4	17.1	--	--	--	--	16.3	17.9	17.2	17.5	--
	°C	10/23/02	--	--	--	15.8	17.9	18.3	19.1	19.4	20.3	17	17.8	15.7	--	--	--	--	15.6	18.2	18	17.2	--
	°C	04/01/03	--	--	--	16.9	17.2	17.7	16.4	17	14.4	15.7	18.5	17.3	--	--	--	--	16.8	18.1	17.7	17.5	--
	°C	09/02/03	--	--	--	--	--	--	--	--	--	--	--	--	19.2	--	--	--	--	--	--	--	--
	°C	10/28/03	--	--	--	16.5	18.5	18.7	19.1	18	18.1	15.9	16.6	18.3	17.7	--	--	--	16.4	18.6	18	18.5	--
	°C	04/27/04	--	--	--	16	18.9	18.2	17	15.5	14	15	17.3	19.4	20.1	--	--	--	16.2	18.6	18.2	18.9	--
	°C	10/26/04	--	--	--	16.8	17.9	18.8	18.8	19.1	19.7	17	18	15.9	17.2	--	--	--	18	18.6	18.3	19.6	--
	°C	03/15/05	--	--	--	16.18	--	--	15.79	15.8	12.86	14.6	17.44	16.39	16.17	--	--	--	--	--	--	--	--
	°C	07/12/05	--	--	--	16.32	--	--	16.8	16.56	18.09	15.97	17.78	17.92	22.34	--	--	--	--	--	--	--	--
	°C	01/19/06	--	--	--	16.61	--	--	17.5	17.51	15.06	15.39	17.88	17.19	16.67	--	--	--	--	--	--	--	--
	°C	06/28/06	--	--	--	--	--	--	--	--	--	--	--	--	--	--	21.67	--	--	--	--	--	--
	°C	07/11/06	--	--	--	16.1	--	--	16.8	17	18.2	15.7	17.7	17.3	17.9	19.9	18.4	--	--	--	--	--	--
	°C	10/31/06	--	--	--	--	--	--	--	--	--	--	--	--	--	17.6	18.7	--	--	--	--	--	--
	°C	01/17/07	--	--	--	15.6	--	--	15.6	15.8	14.5	15	16.6	16	13.3	14.9	15.6	--	--	--	--	--	--
	°C	07/09/07	--	--	--	17.09	--	--	17.81	17.53	18.9	17.00	17.75	17.80	19.16	18.61	18.35	--	--	--	--	--	--
	°C	01/14/08	--	--	--	16.26	--	--	17.88	15.93	15.44	14.32	16.65	17.53	15.82	16.65	--	16.64	--	--	--	--	--
Turbidity (Field)	NTU	10/28/98	--	--	--	80	0.86	6.31	65	19	13	17	Dry	--	--	--	--	--	12	87	46	15	--
	NTU	04/07/99	--	--	--	20	2.21	5.25	1.51	3.13	2.61	2.96	Dry	--	--	--	--	--	5.21	18	16.24	4.84	--
	NTU	12/08/99	--	--	--	20	4.05	120	9.46	5.04	2.24	26	19	--	--	--	--	--	4.27	184	17	40	--
	NTU	04/27/00	--	--	--	32	2.22	20	18	14	7.07	1.76	Dry	--	--	--	--	--	4.9	125	127	13	--
	NTU	10/18/00	--	--	--	20.4	2.86	36.4	38.1	9.2	6.39	1.6	Dry	15.9	--	--	--	--	10.4	37.4	110	6.51	--
	NTU	11/28/00	--	--	--	--	--	--	--	--	--	--	--	11.4	--	--	--	--	--	--	--	--	--
	NTU	01/03/01	--	--	--	--	--	--	--	--	--	--	--	11	--	--	--	--	--	--	--	--	--
	NTU	02/08/01	--	--	--	--	--	--	--	--	--	--	--	18	--	--	--	--	--	--	--	--	--
	NTU	04/19/01	--	--	--	169	10	7.73	31	11	--	11	Dry	16	--	--	--	--	4.32	65	71	5.74	--
	NTU	12/24/01	--	--	--	28	4.82	16	60	5.31	33	2.45	61	29	--	--	--	--	4.93	37	37	5.34	--
	NTU	04/23/02	--	--	--	27	1.6	5.5	26	2.08	290	450	11	4.28	--	--	--	--	3.5	42	31	1.13	--
	NTU	10/23/02	--	--	--	6.54	2.3	4.39	5.77	1.84	3.97	1.35	71	6.58	--	--	--	--	2.79	22	15	4.3	--
	NTU	04/01/03	--	--	--	44	1.98	7.16	23	2.63	15	91	44	10	--	--	--	--	4.34	17	17	1.05	--
	NTU	09/02/03	--	--	--	--	--	--	--	--	--	--	--	--	49	--	--	--	--	--	--	--	--
	NTU	10/28/03	--	--	--	34	3.1	7.4	25	1.8	25	7.99	20	13	38	--	--	--	11	18	19	1.85	--
	NTU	04/27/04	--	--	--	32	1.49	4.26	13	0.85	33	34	20	2.37	15	--	--	--	8.04	17	30	2.71	--
	NTU	10/26/04	--	--	--	10	2.11	2.1	10	0.89	38	5.89	29	44	54	--	--	--	7.22	21	23	4.59	--
	NTU	03/15/05	--	--	--	68.6	--	--	17.9	15.4	43.5	45.1	50.3	26.3	399	--	--	--	--	--	--	--	--
	NTU	07/12/05	--	--	--	78.0	--	--	29.7	30.3	37.3	30.3	45.2	36.3	292	--	--	--	--	--	--	--	--
	NTU	01/19/06	--	--	--	39.2	--	--	0.0	0.0	0.0	0.0	0.0	0.0	88.5	--	--	--	--	--	--	--	--
	NTU	06/28/06	--	--	--	--	--	--	--	--	--	--	--	--	--	--	22.0	--	--	--	--	--	--
	NTU	07/11/06	--	--	--	33.6	--	--	3.4	1.7	25.4	31.0	34.5	15.0	10.3	78.2	39.0	--	--	--	--	--	--
	NTU	10/31/06	--	--	--	--	--	--	--	--	--	--	--	--	--	193	195	--	--	--	--	--	--
	NTU	01/17/07	--	--	--	13.0	--	--	0.0	9.5	23.7	97.20	6.9	8.8	7.4	8.3	0.0	--	--	--	--	--	--
	NTU	07/09/07	--	--	--	0.0	--	--	0.0	0.0	0.0	65.8	0.0	0.0	0.0	0.0	0.0	--	--	--	--	--	--
	NTU	01/14/08	--	--	--	7.31	--	--	5.39	1.19	37.5	24.0	1.29	0.68	29.9	9.48	--	4.08	--	--	--	--	--

TABLE 5

Summary of Groundwater Monitoring Results
Detected Constituents
East Carolina Regional Landfill, Permit No. 08-03
Bertie County, North Carolina

Detected Monitoring Constituents/Parameters	Reporting Units	Sample Date	Detection Limit	Quantitation Limit	SWS Reporting Limit	Yorktown Formation													Black Creek Formation				Blanks
						Upgradient	Downgradient												Upgradient	Downgradient			
						GW-2	GW-3	GW-5	GW-7	GW-8	GW-9	GW-10	GW-11	GW-13	GW-14	GW-15	GW-16	GW-16R	GW-1	GW-4	GW-6	GW-12	
Oxidation Reduction Potential (Field)	mV	03/15/05	--	--	--	363	--	--	411	236	121	14	270	319	133	--	--	--	--	--	--	--	--
	mV	07/12/05	--	--	--	407	--	--	412	234	173	5	279	375	156	--	--	--	--	--	--	--	--
	mV	01/19/06	--	--	--	361	--	--	370	222	174	16	283	339	157	--	--	--	--	--	--	--	--
	mV	06/28/06	--	--	--	--	--	--	--	--	--	--	--	--	--	--	241	--	--	--	--	--	--
	mV	07/11/06	--	--	--	382	--	--	309	312	216	115	317	363	260	290	318	--	--	--	--	--	--
	mV	10/31/06	--	--	--	--	--	--	--	--	--	--	--	--	--	343	297	--	--	--	--	--	--
	mV	01/17/07	--	--	--	347	--	--	391	306	153	32	290	318	268	305	327	--	--	--	--	--	--
	mV	07/09/07	--	--	--	371	--	--	431	309	204	81	290	352	226	328	331	--	--	--	--	--	--
	mV	01/14/08	--	--	--	363	--	--	403	342	166	147	317	336	196	317	--	308	--	--	--	--	--
Dissolved Oxygen (Field)	mg/l	03/15/05	--	--	--	4.65	--	--	2.69	1.61	1.23	1.39	2.10	5.55	5.75	--	--	--	--	--	--	--	--
	mg/l	07/12/05	--	--	--	6.22	--	--	3.06	0.53	1.83	1.12	2.48	6.90	9.98	--	--	--	--	--	--	--	--
	mg/l	01/19/06	--	--	--	3.34	--	--	0.00	0.00	0.00	0.00	0.21	3.71	0.00	--	--	--	--	--	--	--	--
	mg/l	06/28/06	--	--	--	--	--	--	--	--	--	--	--	--	--	--	3.60	--	--	--	--	--	--
	mg/l	07/11/06	--	--	--	9.31	--	--	5.50	3.00	3.32	1.60	3.52	7.88	4.13	8.05	3.84	--	--	--	--	--	--
	mg/l	10/31/06	--	--	--	--	--	--	--	--	--	--	--	--	--	6.30	2.5	--	--	--	--	--	--
	mg/l	01/17/07	--	--	--	8.80	--	--	3.90	1.70	2.70	2.10	4.60	7.80	2.70	7.90	2.7	--	--	--	--	--	--
	mg/l	07/09/07	--	--	--	6.30	--	--	3.20	0.90	1.60	2.30	2.70	6.80	1.00	7.00	2.80	--	--	--	--	--	--
	mg/l	01/14/08	--	--	--	8.12	--	--	4.09	4.87	2.56	3.44	3.96	8.25	1.35	8.66	--	6.37	--	--	--	--	--

Notes:
mg/L = milligrams per liter
ug/L = micrograms per liter
S.U. = Standard Units
NTU = Nephelometric Turbidity Units
ND = Not detected at the stated reporting limit
uS/cm = microsiemens per cubic centimeter
mV = Millivolts
J = Estimated Value
B = Blank-Qualified Value
-- = no data
Blanks = field, trip and method blanks
Shaded = Concentrations above the Groundwater Protection Standards have been shaded
Standards = NC 2L Groundwater Standards or North Carolina Solid Waste Section Groundwater Protection Standards
SWS Reporting Limit = NCPQL prior to 2007 and NCSWSL starting in 01/18/07

TABLE 6

Summary of Surface Water Monitoring Results
Detected Constituents
East Carolina Regional Landfill, Permit No. 08-03
Bertie County, North Carolina

Detected Monitoring Constituent/Parameter	Reporting Units	Sample Date	Detection Limit	Quantitation Limit	SWS Reporting Limit	Upstream SW-1	Downstream SW-2	Downstream SW-3	Downstream SW-4	Blanks
Arsenic	ug/L	07/12/05	--	--	10	ND	ND	ND	ND	ND
SW Standard = 50 ug/L	ug/L	01/19/06	--	--	10	ND	ND	ND	ND	ND
	ug/L	07/12/06	--	--	10	ND	ND	ND	ND	ND
	ug/L	01/17/07	2	10	10	ND	ND	ND	ND	3.4 J
	ug/L	07/09/07	--	--	--	dry	dry	dry	dry	--
	ug/L	01/15/08	2	10	10	ND	ND	dry	2.6 J	ND
Barium	ug/L	09/16/93	--	--	--	100	60	90	dry	--
(No SW Standard)	ug/L	09/20/93	--	--	--	80	50	120	dry	--
	ug/L	09/22/93	--	--	--	50	60	140	dry	--
	ug/L	09/24/93	--	--	--	210	50	230	dry	--
	ug/L	10/04/93	--	--	--	40	70	70	dry	--
	ug/L	01/20/94	--	--	--	50	130	60	40	--
	ug/L	07/28/94	--	--	--	40	dry	60	50	--
	ug/L	01/26/95	--	--	--	80	80	100	10	--
	ug/L	07/26/95	--	--	--	ND	ND	ND	dry	--
	ug/L	01/23/96	--	--	--	ND	ND	ND	dry	--
	ug/L	10/10/96	--	--	--	ND	ND	ND	dry	--
	ug/L	04/15/97	--	--	--	ND	ND	ND	dry	--
	ug/L	10/23/97	--	--	--	ND	ND	ND	dry	--
	ug/L	04/28/98	--	--	--	ND	ND	ND	ND	--
	ug/L	03/15/05	--	--	500	ND	ND	ND	ND	--
	ug/L	07/12/05	--	--	500	ND	ND	ND	ND	ND
	ug/L	01/19/06	--	--	500	ND	ND	ND	ND	ND
	ug/L	07/12/06	--	--	500	ND	ND	ND	ND	ND
	ug/L	01/17/07	0.2	10	100	35.5	44.8	51.9	34.9	0.3 J
	ug/L	07/09/07	--	--	--	dry	dry	dry	dry	--
	ug/L	01/15/08	0.2	10	100	81.3 J	92.1 J	dry	24.1 J	0.3 J
Cadmium	ug/L	09/16/93	--	--	--	ND	ND	1	dry	--
SW Standard = 2 ug/L**	ug/L	09/20/93	--	--	--	1	ND	ND	dry	--
	ug/L	09/22/93	--	--	--	ND	ND	ND	dry	--
	ug/L	09/24/93	--	--	--	ND	ND	ND	dry	--
	ug/L	10/04/93	--	--	--	ND	ND	ND	dry	--
	ug/L	01/20/94	--	--	--	ND	ND	ND	ND	--
	ug/L	07/28/94	--	--	--	5	dry	ND	ND	--
	ug/L	01/26/95	--	--	--	ND	--	ND	ND	--
	ug/L	07/26/95	--	--	--	ND	ND	ND	dry	--
	ug/L	01/23/96	--	--	--	ND	ND	ND	dry	--
	ug/L	10/10/96	--	--	--	ND	ND	ND	dry	--
	ug/L	04/15/97	--	--	--	ND	ND	ND	dry	--
	ug/L	10/23/97	--	--	--	ND	ND	ND	dry	--
	ug/L	04/28/98	--	--	--	1.3	ND	ND	ND	--
	ug/L	03/15/05	--	--	1	ND	ND	ND	ND	--
	ug/L	07/12/05	--	--	1	ND	ND	ND	ND	ND
	ug/L	01/19/06	--	--	1	ND	ND	ND	ND	ND
	ug/L	07/12/06	--	--	1	ND	ND	ND	ND	ND
	ug/L	01/17/07	0.5	1	1	ND	ND	ND	ND	ND
	ug/L	07/09/07	--	--	--	dry	dry	dry	dry	--
	ug/L	01/15/08	0.5	1	1	ND	ND	dry	ND	ND

TABLE 6

Summary of Surface Water Monitoring Results
Detected Constituents
East Carolina Regional Landfill, Permit No. 08-03
Bertie County, North Carolina

Detected Monitoring Constituent/Parameter	Reporting Units	Sample Date	Detection Limit	Quantitation Limit	SWS Reporting Limit	Upstream SW-1	Downstream SW-2	Downstream SW-3	Downstream SW-4	Blanks
Chromium	ug/L	09/16/93	--	--	--	ND	ND	10	dry	--
SW Standard = 50 ug/L	ug/L	09/20/93	--	--	--	ND	ND	ND	dry	--
	ug/L	09/22/93	--	--	--	ND	ND	10	dry	--
	ug/L	09/24/93	--	--	--	70	ND	70	dry	--
	ug/L	10/04/93	--	--	--	1	ND	ND	dry	--
	ug/L	01/20/94	--	--	--	ND	ND	ND	ND	--
	ug/L	07/28/94	--	--	--	ND	dry	ND	ND	--
	ug/L	01/26/95	--	--	--	ND	ND	ND	ND	--
	ug/L	07/26/95	--	--	--	ND	ND	ND	dry	--
	ug/L	01/23/96	--	--	--	ND	ND	ND	dry	--
	ug/L	10/10/96	--	--	--	ND	ND	ND	dry	--
	ug/L	04/15/97	--	--	--	ND	ND	ND	dry	--
	ug/L	10/23/97	--	--	--	ND	ND	ND	dry	--
	ug/L	04/28/98	--	--	--	ND	ND	ND	ND	--
	ug/L	10/28/98	--	--	10	ND	ND	dry	dry	--
	ug/L	04/07/99	--	--	10	ND	ND	ND	ND	--
	ug/L	12/08/99	--	--	10	ND	dry	ND	ND	--
	ug/L	04/27/00	--	--	10	ND	ND	ND	ND	--
	ug/L	10/18/00	--	--	10	ND	dry	ND	dry	--
	ug/L	04/18/01	--	--	10	ND	ND	ND	ND	--
	ug/L	10/24/01	--	--	10	ND	ND	ND	ND	--
	ug/L	04/23/02	--	--	10	ND	ND	ND	ND	--
	ug/L	10/23/02	--	--	10	ND	ND	ND	ND	--
	ug/L	04/01/03	--	--	10	ND	ND	ND	ND	--
	ug/L	10/27/03	--	--	10	ND	40	ND	dry	--
	ug/L	04/27/04	--	--	10	ND	40	ND	ND	--
	ug/L	10/26/04	--	--	10	ND	ND	ND	ND	--
	ug/L	03/15/05	--	--	10	ND	ND	ND	ND	ND
	ug/L	07/12/05	--	--	10	ND	ND	ND	ND	ND
	ug/L	01/19/06	--	--	10	ND	ND	ND	ND	ND
	ug/L	07/12/06	--	--	10	ND	ND	ND	ND	ND
	ug/L	01/17/07	2	10	10	ND	3.3 J	ND	ND	ND
	ug/L	07/09/07	--	--	--	dry	dry	dry	dry	--
	ug/L	01/15/08	2	10	10	ND	ND	dry	ND	ND
Cobalt	ug/L	09/16/93	--	--	--	ND	ND	ND	dry	--
(No SW Standard)	ug/L	09/20/93	--	--	--	ND	ND	ND	dry	--
	ug/L	09/22/93	--	--	--	ND	ND	ND	dry	--
	ug/L	09/24/93	--	--	--	ND	ND	ND	dry	--
	ug/L	10/04/93	--	--	--	ND	ND	ND	dry	--
	ug/L	01/20/94	--	--	--	ND	ND	ND	ND	--
	ug/L	07/28/94	--	--	--	ND	dry	ND	ND	--
	ug/L	01/26/95	--	--	--	ND	10	ND	ND	--
	ug/L	07/26/95	--	--	--	ND	ND	ND	dry	--
	ug/L	01/23/96	--	--	--	ND	ND	ND	dry	--
	ug/L	10/10/96	--	--	--	ND	ND	ND	dry	--
	ug/L	04/15/97	--	--	--	ND	ND	ND	dry	--
	ug/L	10/23/97	--	--	--	ND	ND	ND	dry	--
	ug/L	04/28/98	--	--	--	ND	ND	ND	ND	--
	ug/L	10/28/98	--	--	10	ND	ND	dry	dry	--
	ug/L	04/07/99	--	--	10	ND	ND	ND	ND	--
	ug/L	12/08/99	--	--	10	ND	dry	ND	ND	--
	ug/L	04/27/00	--	--	10	ND	ND	ND	ND	--
	ug/L	10/18/00	--	--	10	ND	dry	ND	dry	--
	ug/L	04/18/01	--	--	10	ND	ND	ND	ND	--
	ug/L	10/24/01	--	--	10	ND	ND	ND	ND	--
	ug/L	04/23/02	--	--	10	ND	ND	ND	ND	--
	ug/L	10/23/02	--	--	10	ND	ND	ND	ND	--
	ug/L	04/01/03	--	--	10	ND	ND	ND	ND	--
	ug/L	10/27/03	--	--	10	ND	10	ND	dry	--
	ug/L	04/27/04	--	--	10	ND	ND	ND	ND	--
	ug/L	10/26/04	--	--	10	ND	ND	ND	ND	--
	ug/L	03/15/05	--	--	10	ND	ND	ND	ND	ND
	ug/L	07/12/05	--	--	10	ND	ND	ND	ND	ND
	ug/L	01/19/06	--	--	10	ND	ND	ND	ND	ND
	ug/L	07/12/06	--	--	10	ND	ND	ND	ND	ND
	ug/L	01/17/07	2	10	10	ND	ND	ND	ND	ND
	ug/L	07/09/07	--	--	--	dry	dry	dry	dry	--
	ug/L	01/15/08	2	10	10	ND	2.9 J	dry	ND	ND

TABLE 6

Summary of Surface Water Monitoring Results
Detected Constituents
East Carolina Regional Landfill, Permit No. 08-03
Bertie County, North Carolina

Detected Monitoring Constituent/Parameter	Reporting Units	Sample Date	Detection Limit	Quantitation Limit	SWS Reporting Limit	Upstream SW-1	Downstream SW-2	Downstream SW-3	Downstream SW-4	Blanks
Copper	ug/L	09/16/93	--	--	--	ND	ND	ND	dry	--
SW Standard = 7 ug/L*	ug/L	09/20/93	--	--	--	ND	ND	30	dry	--
	ug/L	09/22/93	--	--	--	ND	ND	30	dry	--
	ug/L	09/24/93	--	--	--	20	ND	30	dry	--
	ug/L	10/04/93	--	--	--	ND	ND	ND	dry	--
	ug/L	01/20/94	--	--	--	ND	ND	ND	ND	--
	ug/L	07/28/94	--	--	--	ND	dry	ND	ND	--
	ug/L	01/26/95	--	--	--	ND	ND	ND	ND	--
	ug/L	07/26/95	--	--	--	ND	ND	ND	dry	--
	ug/L	01/23/96	--	--	--	ND	ND	ND	dry	--
	ug/L	10/10/96	--	--	--	ND	ND	ND	dry	--
	ug/L	04/15/97	--	--	--	ND	ND	ND	dry	--
	ug/L	10/23/97	--	--	--	ND	50	ND	dry	--
	ug/L	04/28/98	--	--	--	ND	ND	ND	ND	--
	ug/L	03/15/05	--	--	200	ND	ND	ND	ND	ND
	ug/L	07/12/05	--	--	200	ND	ND	ND	ND	ND
	ug/L	01/19/06	--	--	200	ND	ND	ND	ND	ND
	ug/L	07/12/06	--	--	200	ND	ND	ND	ND	ND
	ug/L	01/17/07	0.6	10	10	ND	4.5 J	ND	ND	ND
	ug/L	07/09/07	--	--	--	dry	dry	dry	dry	--
	ug/L	01/15/08	0.6	10	10	ND	ND	dry	ND	0.7 J
Lead	ug/L	09/16/93	--	--	--	ND	ND	31	dry	--
SW Standard = 25 ug/L**	ug/L	09/20/93	--	--	--	16	9	19	dry	--
	ug/L	09/22/93	--	--	--	7	ND	33	dry	--
	ug/L	09/24/93	--	--	--	36	ND	44	dry	--
	ug/L	10/04/93	--	--	--	9	ND	ND	dry	--
	ug/L	01/20/94	--	--	--	ND	ND	ND	ND	--
	ug/L	07/28/94	--	--	--	ND	dry	ND	ND	--
	ug/L	01/26/95	--	--	--	ND	ND	ND	ND	--
	ug/L	07/26/95	--	--	--	ND	ND	ND	dry	--
	ug/L	01/23/96	--	--	--	ND	ND	ND	dry	--
	ug/L	10/10/96	--	--	--	ND	ND	ND	dry	--
	ug/L	04/15/97	--	--	--	ND	ND	ND	dry	--
	ug/L	10/23/97	--	--	--	ND	ND	ND	dry	--
	ug/L	04/28/98	--	--	--	ND	ND	ND	ND	--
	ug/L	10/28/98	--	--	10	ND	ND	dry	dry	--
	ug/L	04/07/99	--	--	10	ND	ND	ND	ND	--
	ug/L	12/08/99	--	--	10	ND	dry	ND	ND	--
	ug/L	04/27/00	--	--	10	ND	ND	ND	ND	--
	ug/L	10/18/00	--	--	10	ND	dry	ND	dry	--
	ug/L	04/18/01	--	--	10	ND	ND	ND	ND	--
	ug/L	10/24/01	--	--	10	ND	ND	ND	ND	--
	ug/L	04/23/02	--	--	10	ND	ND	ND	ND	--
	ug/L	10/23/02	--	--	10	ND	ND	ND	ND	--
	ug/L	04/01/03	--	--	10	ND	ND	ND	ND	--
	ug/L	10/27/03	--	--	10	ND	30	ND	dry	--
	ug/L	04/27/04	--	--	10	ND	20	ND	ND	--
	ug/L	10/26/04	--	--	10	ND	ND	ND	ND	--
	ug/L	03/15/05	--	--	10	ND	ND	ND	ND	ND
	ug/L	07/12/05	--	--	10	ND	ND	ND	ND	ND
	ug/L	01/19/06	--	--	10	ND	ND	ND	ND	ND
	ug/L	07/12/06	--	--	10	ND	ND	ND	ND	ND
	ug/L	01/17/07	2	10	10	ND	ND	2.7 J	ND	ND
	ug/L	07/09/07	--	--	--	dry	dry	dry	dry	--
	ug/L	01/15/08	2	10	10	ND	ND	dry	ND	ND

TABLE 6

Summary of Surface Water Monitoring Results
Detected Constituents
East Carolina Regional Landfill, Permit No. 08-03
Bertie County, North Carolina

Detected Monitoring Constituent/Parameter	Reporting Units	Sample Date	Detection Limit	Quantitation Limit	SWS Reporting Limit	Upstream SW-1	Downstream SW-2	Downstream SW-3	Downstream SW-4	Blanks
Nickel	ug/L	09/16/93	--	--	--	ND	ND	ND	dry	--
SW Standard = 88 ug/L**	ug/L	09/20/93	--	--	--	ND	ND	ND	dry	--
	ug/L	09/22/93	--	--	--	ND	ND	ND	dry	--
	ug/L	09/24/93	--	--	--	ND	ND	ND	dry	--
	ug/L	10/04/93	--	--	--	30	ND	ND	dry	--
	ug/L	01/20/94	--	--	--	ND	ND	ND	ND	--
	ug/L	07/28/94	--	--	--	ND	dry	ND	ND	--
	ug/L	01/26/95	--	--	--	ND	ND	ND	ND	--
	ug/L	07/26/95	--	--	--	ND	ND	ND	dry	--
	ug/L	01/23/96	--	--	--	ND	ND	ND	dry	--
	ug/L	10/10/96	--	--	--	ND	ND	ND	dry	--
	ug/L	04/15/97	--	--	--	ND	ND	ND	dry	--
	ug/L	10/23/97	--	--	--	ND	ND	ND	dry	--
	ug/L	04/28/98	--	--	--	ND	ND	ND	ND	--
	ug/L	10/28/98	--	--	50	ND	ND	dry	dry	--
	ug/L	04/07/99	--	--	50	ND	ND	ND	ND	--
	ug/L	12/08/99	--	--	50	50	dry	ND	ND	--
	ug/L	04/27/00	--	--	50	ND	ND	ND	ND	--
	ug/L	10/18/00	--	--	50	ND	dry	ND	dry	--
	ug/L	04/18/01	--	--	50	ND	ND	ND	ND	--
	ug/L	10/24/01	--	--	50	ND	ND	ND	ND	--
	ug/L	04/23/02	--	--	50	ND	ND	ND	ND	--
	ug/L	10/23/02	--	--	50	ND	ND	ND	ND	--
	ug/L	04/01/03	--	--	50	ND	ND	ND	ND	--
	ug/L	10/27/03	--	--	50	ND	ND	ND	dry	--
	ug/L	04/27/04	--	--	50	ND	ND	ND	ND	--
	ug/L	10/26/04	--	--	50	ND	ND	ND	ND	--
	ug/L	03/15/05	--	--	50	ND	ND	ND	ND	ND
	ug/L	07/12/05	--	--	50	ND	ND	ND	ND	ND
	ug/L	01/19/06	--	--	50	ND	ND	ND	ND	ND
	ug/L	07/12/06	--	--	50	ND	ND	ND	ND	ND
	ug/L	01/17/07	2	10	50	ND	3.8 J	2.8 J	3.0 J	ND
	ug/L	07/09/07	--	--	--	dry	dry	dry	dry	--
	ug/L	01/15/08	2	10	50	ND	2.4 J	dry	ND	ND
Selenium	ug/L	07/12/05	--	--	20	ND	ND	ND	ND	ND
SW Standard = 5 ug/L	ug/L	01/19/06	--	--	20	ND	ND	ND	ND	ND
	ug/L	07/12/06	--	--	20	ND	ND	ND	ND	ND
	ug/L	01/17/07	2	10	10	ND	ND	3.4 J	ND	ND
	ug/L	07/09/07	--	--	--	dry	dry	dry	dry	--
	ug/L	01/15/08	2	10	10	ND	ND	dry	ND	ND
Silver	ug/L	09/16/93	--	--	--	ND	ND	ND	dry	--
SW Standard = 0.06 ug/L*	ug/L	09/20/93	--	--	--	ND	ND	ND	dry	--
	ug/L	09/22/93	--	--	--	ND	10	ND	dry	--
	ug/L	09/24/93	--	--	--	ND	ND	ND	dry	--
	ug/L	10/04/93	--	--	--	ND	ND	ND	dry	--
	ug/L	01/20/94	--	--	--	ND	ND	ND	ND	--
	ug/L	07/28/94	--	--	--	ND	dry	ND	ND	--
	ug/L	01/26/95	--	--	--	ND	ND	ND	ND	--
	ug/L	07/26/95	--	--	--	ND	ND	ND	dry	--
	ug/L	01/23/96	--	--	--	ND	ND	ND	dry	--
	ug/L	10/10/96	--	--	--	ND	ND	ND	dry	--
	ug/L	03/15/05	--	--	10	ND	ND	ND	ND	ND
	ug/L	07/12/05	--	--	10	ND	ND	ND	ND	ND
	ug/L	01/19/06	--	--	10	ND	ND	ND	ND	ND
	ug/L	07/12/06	--	--	10	ND	ND	ND	ND	ND
	ug/L	01/17/07	2	10	10	ND	ND	ND	ND	ND
	ug/L	07/09/07	--	--	--	dry	dry	dry	dry	--
	ug/L	01/15/08	2	10	10	ND	ND	dry	ND	ND
Thallium	ug/L	07/12/05	--	--	10	ND	ND	ND	ND	ND
(No SW Standard)	ug/L	01/19/06	--	--	10	ND	ND	ND	ND	ND
	ug/L	07/12/06	--	--	10	ND	ND	ND	ND	ND
	ug/L	01/17/07	0.044	0.05	5.5	ND	ND	ND	ND	ND
	ug/L	01/15/08	0.036	1	5.5	0.039 J	0.056 J	dry	ND	ND

TABLE 6

Summary of Surface Water Monitoring Results
Detected Constituents
East Carolina Regional Landfill, Permit No. 08-03
Bertie County, North Carolina

Detected Monitoring Constituent/Parameter	Reporting Units	Sample Date	Detection Limit	Quantitation Limit	SWS Reporting Limit	Upstream SW-1	Downstream SW-2	Downstream SW-3	Downstream SW-4	Blanks
Vanadium	ug/L	09/16/93	--	--	--	ND	ND	40	dry	--
(No SW Standard)	ug/L	09/20/93	--	--	--	ND	ND	70	dry	--
	ug/L	09/22/93	--	--	--	30	ND	100	dry	--
	ug/L	09/24/93	--	--	--	280	ND	200	dry	--
	ug/L	10/04/93	--	--	--	ND	ND	ND	dry	--
	ug/L	01/20/94	--	--	--	ND	ND	ND	ND	--
	ug/L	07/28/94	--	--	--	ND	dry	ND	ND	--
	ug/L	01/26/95	--	--	--	ND	ND	ND	ND	--
	ug/L	07/26/95	--	--	--	ND	ND	ND	dry	--
	ug/L	01/23/96	--	--	--	ND	ND	ND	dry	--
	ug/L	10/10/96	--	--	--	ND	ND	ND	dry	--
	ug/L	04/15/97	--	--	--	ND	ND	ND	dry	--
	ug/L	10/23/97	--	--	--	ND	ND	ND	dry	--
	ug/L	04/28/98	--	--	--	ND	ND	ND	ND	--
	ug/L	10/28/98	--	--	40	ND	ND	dry	dry	--
	ug/L	04/07/99	--	--	40	ND	ND	ND	ND	--
	ug/L	12/08/99	--	--	40	ND	dry	ND	ND	--
	ug/L	04/27/00	--	--	40	ND	ND	ND	ND	--
	ug/L	10/18/00	--	--	40	ND	dry	ND	dry	--
	ug/L	04/18/01	--	--	40	ND	ND	ND	ND	--
	ug/L	10/24/01	--	--	40	ND	ND	ND	ND	--
	ug/L	04/23/02	--	--	40	ND	ND	ND	ND	--
	ug/L	10/23/02	--	--	40	ND	ND	ND	ND	--
	ug/L	04/01/03	--	--	40	ND	ND	ND	ND	--
	ug/L	10/27/03	--	--	40	ND	60	ND	dry	--
	ug/L	04/27/04	--	--	40	ND	60	ND	ND	--
	ug/L	10/26/04	--	--	40	ND	ND	ND	ND	--
	ug/L	03/15/05	--	--	40	ND	ND	ND	ND	ND
	ug/L	07/12/05	--	--	40	ND	ND	ND	ND	ND
	ug/L	01/19/06	--	--	40	ND	ND	ND	ND	ND
	ug/L	07/12/06	--	--	40	ND	ND	ND	ND	ND
	ug/L	01/17/07	1	10	25	2.2 J	2.8 J	2.3 J	2.2 J	ND
	ug/L	07/09/07	--	--	--	dry	dry	dry	dry	--
	ug/L	01/15/08	1	10	25	4.1 J	ND	dry	1.0 B	1.0 J
Zinc	ug/L	09/16/93	--	--	--	30	20	60	dry	--
SW Standard = 50 ug/L*	ug/L	09/20/93	--	--	--	130	40	120	dry	--
	ug/L	09/22/93	--	--	--	100	60	340	dry	--
	ug/L	09/24/93	--	--	--	240	70	420	dry	--
	ug/L	10/04/93	--	--	--	1000	190	70	dry	--
	ug/L	01/20/94	--	--	--	60	200	70	70	--
	ug/L	07/28/94	--	--	--	120	dry	ND	30	--
	ug/L	01/26/95	--	--	--	ND	30	60	60	--
	ug/L	07/26/95	--	--	--	ND	ND	ND	dry	--
	ug/L	01/23/96	--	--	--	ND	ND	ND	dry	--
	ug/L	10/10/96	--	--	--	ND	ND	ND	dry	--
	ug/L	04/15/97	--	--	--	80	60	60	dry	--
	ug/L	10/23/97	--	--	--	100	60	30	dry	--
	ug/L	04/28/98	--	--	--	50	ND	ND	ND	--
	ug/L	10/28/98	--	--	50	ND	ND	dry	dry	--
	ug/L	04/07/99	--	--	50	30	40	30	40	--
	ug/L	12/08/99	--	--	50	60	dry	50	60	--
	ug/L	04/27/00	--	--	50	ND	70	60	ND	--
	ug/L	10/18/00	--	--	50	50	dry	70	dry	--
	ug/L	04/18/01	--	--	50	ND	ND	ND	ND	--
	ug/L	10/24/01	--	--	50	ND	ND	ND	ND	--
	ug/L	04/23/02	--	--	50	ND	50	ND	ND	--
	ug/L	10/23/02	--	--	50	ND	60	ND	ND	--
	ug/L	04/01/03	--	--	50	60	30	50	70	--
	ug/L	10/27/03	--	--	50	ND	130	70	dry	--
	ug/L	04/27/04	--	--	50	ND	60	ND	ND	--
	ug/L	10/26/04	--	--	50	ND	ND	ND	ND	--
	ug/L	03/15/05	--	--	50	ND	ND	ND	ND	ND
	ug/L	07/12/05	--	--	50	100	ND	ND	ND	ND
	ug/L	01/19/06	--	--	50	ND	ND	79	ND	ND
	ug/L	07/12/06	--	--	50	ND	ND	ND	ND	ND
	ug/L	01/17/07	1	10	10	15.8 B	9.2 B	16.9 B	11.6 B	5.5 J
	ug/L	07/09/07	--	--	--	dry	dry	dry	dry	--
	ug/L	01/15/08	1	10	10	8.7 J	13.6	dry	5.7 B	1.3 J

TABLE 6

Summary of Surface Water Monitoring Results
Detected Constituents
East Carolina Regional Landfill, Permit No. 08-03
Bertie County, North Carolina

Detected Monitoring Constituent/Parameter	Reporting Units	Sample Date	Detection Limit	Quantitation Limit	SWS Reporting Limit	Upstream	Downstream			Blanks
						SW-1	SW-2	SW-3	SW-4	
Methyl Isobutyl Ketone	ug/l	09/24/93	--	--	--	150	ND	ND	dry	--
(No SW Standard)	ug/L	03/15/05	--	--	100	ND	ND	ND	ND	--
	ug/L	07/12/05	--	--	100	ND	ND	ND	ND	ND
	ug/L	01/19/06	--	--	10	ND	ND	ND	ND	ND
	ug/L	07/12/06	--	--	100	ND	ND	ND	ND	ND
	ug/L	01/17/07	0.36	5	100	ND	ND	ND	ND	ND
	ug/L	07/09/07	--	--	--	dry	dry	dry	dry	--
	ug/L	01/15/08	0.36	5	100	ND	ND	dry	ND	ND
Toluene	ug/L	10/23/97	--	--	--	ND	ND	20	dry	--
SW Standard = 11 ug/L	ug/L	10/28/98	--	--	5	ND	ND	dry	dry	--
	ug/L	04/07/99	--	--	5	ND	ND	ND	ND	--
	ug/L	12/08/99	--	--	5	ND	dry	ND	ND	--
	ug/L	04/27/00	--	--	5	ND	ND	ND	ND	--
	ug/L	10/18/00	--	--	5	ND	dry	ND	dry	--
	ug/L	04/18/01	--	--	5	ND	ND	ND	ND	--
	ug/L	10/24/01	--	--	5	ND	ND	ND	ND	--
	ug/L	04/23/02	--	--	5	ND	ND	ND	ND	--
	ug/L	10/23/02	--	--	5	ND	ND	ND	ND	--
	ug/L	04/01/03	--	--	5	ND	ND	ND	ND	--
	ug/L	10/27/03	--	--	5	ND	ND	ND	dry	--
	ug/L	04/27/04	--	--	5	ND	ND	ND	ND	--
	ug/L	10/26/04	--	--	5	ND	ND	ND	ND	--
	ug/L	03/15/05	--	--	5	ND	ND	ND	ND	ND
	ug/L	07/12/05	--	--	5	ND	ND	ND	ND	ND
	ug/L	01/19/06	--	--	5	ND	ND	ND	ND	ND
	ug/L	07/12/06	--	--	5	ND	ND	ND	ND	ND
	ug/L	01/17/07	0.15	1	5	ND	ND	ND	ND	ND
	ug/L	07/09/07	--	--	--	dry	dry	dry	dry	--
	ug/L	01/15/08	0.15	1	1	ND	ND	dry	ND	ND
Xylenes (total)	ug/L	10/23/97	--	--	--	ND	ND	10	dry	--
(No SW Standard)	ug/L	10/28/98	--	--	5	ND	ND	dry	dry	--
	ug/L	04/07/99	--	--	5	ND	ND	ND	ND	--
	ug/L	12/08/99	--	--	5	ND	dry	ND	ND	--
	ug/L	04/27/00	--	--	5	ND	ND	ND	ND	--
	ug/L	10/18/00	--	--	5	ND	dry	ND	dry	--
	ug/L	04/18/01	--	--	5	ND	ND	ND	ND	--
	ug/L	10/24/01	--	--	5	ND	ND	ND	ND	--
	ug/L	04/23/02	--	--	5	ND	ND	ND	ND	--
	ug/L	10/23/02	--	--	5	ND	ND	ND	ND	--
	ug/L	04/01/03	--	--	5	ND	ND	ND	ND	--
	ug/L	10/27/03	--	--	5	ND	ND	ND	dry	--
	ug/L	04/27/04	--	--	5	ND	ND	ND	ND	--
	ug/L	10/26/04	--	--	5	ND	ND	ND	ND	--
	ug/L	03/15/05	--	--	5	ND	ND	ND	ND	ND
	ug/L	07/12/05	--	--	5	ND	ND	ND	ND	ND
	ug/L	01/19/06	--	--	5	ND	ND	ND	ND	ND
	ug/L	07/12/06	--	--	5	ND	ND	ND	ND	ND
	ug/L	01/17/07	0.21	2	5	ND	ND	ND	ND	ND
	ug/L	07/09/07	--	--	--	dry	dry	dry	dry	--
	ug/L	01/15/08	0.21	1	5	ND	ND	dry	ND	ND

TABLE 6

Summary of Surface Water Monitoring Results
Detected Constituents
East Carolina Regional Landfill, Permit No. 08-03
Bertie County, North Carolina

Detected Monitoring Constituent/Parameter	Reporting Units	Sample Date	Detection Limit	Quantitation Limit	SWS Reporting Limit	Upstream	Downstream			Blanks
						SW-1	SW-2	SW-3	SW-4	
pH (Field)	S.U.	10/28/98	--	--	--	7.05	5.47	dry	dry	--
	S.U.	04/07/99	--	--	--	5.26	7.18	6.22	6.74	--
	S.U.	12/08/99	--	--	--	5.04	dry	5.56	5.24	--
	S.U.	04/27/00	--	--	--	5.15	6.47	6.02	5.8	--
	S.U.	10/18/00	--	--	--	8.28	dry	6.07	dry	--
	S.U.	04/18/01	--	--	--	5.67	7.75	5.96	6.29	--
	S.U.	10/24/01	--	--	--	6.64	6.27	6.39	6.02	--
	S.U.	04/23/02	--	--	--	5.7	6.07	8.16	7.71	--
	S.U.	10/23/02	--	--	--	4.03	6.31	4.78	5.19	--
	S.U.	04/01/03	--	--	--	4.67	8.23	5.8	5.73	--
	S.U.	10/27/03	--	--	--	4.57	5.2	5.55	dry	--
	S.U.	04/27/04	--	--	--	4.88	6.12	5.77	6.62	--
	S.U.	10/26/04	--	--	--	5.82	6.04	5.62	5.57	--
	S.U.	03/15/05	--	--	--	4.51	5.96	5.63	5.67	--
	S.U.	07/13/05	--	--	--	5.55	6.18	5.83	5.38	--
	S.U.	01/19/06	--	--	--	3.54	7.25	5.49	4.51	--
	S.U.	07/12/06	--	--	--	7.10	6.07	5.88	5.65	--
	S.U.	01/17/07	--	--	--	4.57	4.20	5.36	5.26	--
	S.U.	07/09/07	--	--	--	dry	dry	dry	dry	--
	S.U.	01/15/08	--	--	--	5.63	5.42	dry	5.56	--
Specific Conductance (Field)	uS/cm	10/28/98	--	--	--	50	109	dry	dry	--
	uS/cm	04/07/99	--	--	--	31.89	88.29	67	55.32	--
	uS/cm	12/08/99	--	--	--	29	dry	32	24	--
	uS/cm	04/27/00	--	--	--	26	143	48	31	--
	uS/cm	10/18/00	--	--	--	72	dry	136	dry	--
	uS/cm	04/18/01	--	--	--	21	75	48	28	--
	uS/cm	10/24/01	--	--	--	41	99	72	51	--
	uS/cm	04/23/02	--	--	--	64	79	80	43	--
	uS/cm	10/23/02	--	--	--	39	87	50	26	--
	uS/cm	04/01/03	--	--	--	35	121	42	45	--
	uS/cm	10/27/03	--	--	--	31	48	50	dry	--
	uS/cm	04/27/04	--	--	--	58	399	74	72	--
	uS/cm	10/26/04	--	--	--	62	190	88	40	--
	uS/cm	03/15/05	--	--	--	32	46	51	38	--
	uS/cm	07/13/05	--	--	--	64	155	141	76	--
	uS/cm	01/19/06	--	--	--	31	50	52	43	--
	uS/cm	07/12/06	--	--	--	50	200	97	101	--
	uS/cm	01/17/07	--	--	--	14	103	81	51	--
	uS/cm	07/09/07	--	--	--	dry	dry	dry	dry	--
	uS/cm	01/15/08	--	--	--	108	353	dry	65	--
Temperature (Field)	°C	10/28/98	--	--	--	13	20.3	dry	dry	--
	°C	04/07/99	--	--	--	18.1	25.1	29.3	23.9	--
	°C	12/08/99	--	--	--	8.5	dry	11.5	10.6	--
	°C	04/27/00	--	--	--	13.1	14	13.6	12.6	--
	°C	10/18/00	--	--	--	18.1	dry	20.1	dry	--
	°C	04/18/01	--	--	--	9.2	7.3	8	9.1	--
	°C	10/24/01	--	--	--	19.3	23.8	25.9	24.9	--
	°C	04/23/02	--	--	--	18.7	16.3	26.2	25.4	--
	°C	10/23/02	--	--	--	13.5	12.2	12	12	--
	°C	04/01/03	--	--	--	15.4	21.6	26	24.2	--
	°C	10/27/03	--	--	--	18.6	20.1	20.8	dry	--
	°C	04/27/04	--	--	--	16.7	21.9	20.6	22.9	--
	°C	10/26/04	--	--	--	15.6	17.4	18.1	17.6	--
	°C	03/15/05	--	--	--	12.09	14.65	15.57	10.8	--
	°C	07/13/05	--	--	--	25.58	25.31	26.40	24.82	--
	°C	01/19/06	--	--	--	8.41	6.76	9.79	9.97	--
	°C	07/12/06	--	--	--	24.5	29.7	27.40	25.5	--
	°C	01/17/07	--	--	--	11.7	11.8	11.70	11.7	--
	°C	07/09/07	--	--	--	dry	dry	dry	dry	--
	°C	01/15/08	--	--	--	4.82	10.05	dry	6.12	--

TABLE 6

Summary of Surface Water Monitoring Results
Detected Constituents
East Carolina Regional Landfill, Permit No. 08-03
Bertie County, North Carolina

Detected Monitoring Constituent/Parameter	Reporting Units	Sample Date	Detection Limit	Quantitation Limit	SWS Reporting Limit	Upstream	Downstream			Blanks
						SW-1	SW-2	SW-3	SW-4	
Turbidity (Field)	NTU	10/28/98	--	--	--	93	99	dry	dry	--
	NTU	04/07/99	--	--	--	4.37	16	58	20	--
	NTU	12/08/99	--	--	--	13	dry	50	143	--
	NTU	04/27/00	--	--	--	25	202	148	80	--
	NTU	10/18/00	--	--	--	20	dry	58	dry	--
	NTU	04/18/01	--	--	--	16.1	183	23	192	--
	NTU	10/24/01	--	--	--	38	44	78	94	--
	NTU	04/23/02	--	--	--	20	38	34	9.28	--
	NTU	10/23/02	--	--	--	23	292	75	179	--
	NTU	04/01/03	--	--	--	3.01	75	16	153	--
	NTU	10/27/03	--	--	--	37	780	2.33	dry	--
	NTU	04/27/04	--	--	--	18	750	16	11	--
	NTU	10/26/04	--	--	--	73	74	37	79	--
	NTU	03/15/05	--	--	--	24.8	64.3	41.7	274	--
	NTU	07/13/05	--	--	--	141	401	150	546	--
	NTU	01/19/06	--	--	--	62.5	33.2	0.0	242	--
	NTU	07/12/06	--	--	--	16.1	116	17.8	71.3	--
	NTU	01/17/07	--	--	--	1.5	32.8	28.0	121	--
	NTU	07/09/07	--	--	--	dry	dry	dry	dry	--
	NTU	01/15/08	--	--	--	177	182	dry	205	--
Oxidation Reduction Potential (Field)	mV	03/15/05	--	--	--	345	139	160	152	--
	mV	07/13/05	--	--	--	148	22	73	32	--
	mV	01/19/06	--	--	--	338	107	122	186	--
	mV	07/12/06	--	--	--	196	203	193	196	--
	mV	01/17/07	--	--	--	326	255	234	229	--
	mV	07/09/07	--	--	--	dry	dry	dry	dry	--
	mV	01/15/08	--	--	--	186	163	dry	218	--
Dissolved Oxygen (Field)	mg/L	03/15/05	--	--	--	6.86	6.92	6.11	7.40	--
	mg/L	07/13/05	--	--	--	5.04	7.50	8.08	5.75	--
	mg/L	01/19/06	--	--	--	5.14	5.86	5.15	6.32	--
	mg/L	07/12/06	--	--	--	14.82	12.15	11.2	12.3	--
	mg/L	01/17/07	--	--	--	5.4	5.4	4.7	6.2	--
	mg/L	07/09/07	--	--	--	dry	dry	dry	dry	--
	mg/L	01/15/08	--	--	--	11.27	5.95	dry	13.53	--

Notes:
mg/L = milligrams per liter
ug/L = micrograms per liter
S.U. = Standard Units
NTU = Nephelometric Turbidity Units
ND = Not detected at the stated reporting limit
uS/cm= microsiemens per cubic centimeter
mV = Millivolts
J = Estimated Value
B = Blank-Qualified Value
-- = no data
Blanks = field, trip and method blanks
Shaded = Concentrations above the SW Standards have been shaded
SW Standards= NC Freshwater Aquatic Life Standards as defined in 15A NCAC 2B
SWS Reporting Limit = NCPQL prior to 2007 and NCSWSL starting in 01/18/07
* = SW Standard is an Action Level
** = SW Standard is a Narrative Standard

TABLE 7

Summary of Leachate Monitoring Results
Detected Constituents
East Carolina Regional Landfill, Permit No. 08-03
Bertie County, North Carolina

Detected Monitoring Constituents/Parameters	Reporting Units	Sample Date	Detection Limit	Quantitation Limit	SWS Reporting Limit	Leachate	Blanks
Antimony	ug/L	07/13/05	--	--	30	ND	ND
	ug/L	01/20/06	--	--	30	ND	ND
	ug/L	07/12/06	--	--	30	ND	ND
	ug/L	01/18/07	0.58	2.00	6	5.08	ND
	ug/L	07/10/07	0.68	2.00	6	3.07 J	ND
	ug/L	01/15/08	0.68	2.00	6	9.02	ND
Arsenic	ug/L	04/07/99	--	--	10	ND	--
	ug/L	12/08/99	--	--	10	10	--
	ug/L	04/27/00	--	--	10	10	--
	ug/L	10/18/00	--	--	10	--	--
	ug/L	11/28/00	--	--	10	--	--
	ug/L	01/03/01	--	--	10	--	--
	ug/L	02/08/01	--	--	10	--	--
	ug/L	04/19/01	--	--	10	--	--
	ug/L	12/24/01	--	--	10	--	--
	ug/L	04/23/02	--	--	10	--	--
	ug/L	10/23/02	--	--	10	--	--
	ug/L	04/01/03	--	--	10	--	--
	ug/L	09/02/03	--	--	10	--	--
	ug/L	10/28/03	--	--	10	--	--
	ug/L	04/27/04	--	--	10	--	--
	ug/L	10/26/04	--	--	10	--	--
	ug/L	03/15/05	--	--	10	21	ND
	ug/L	07/13/05	--	--	10	34	ND
	ug/L	01/20/06	--	--	10	24	ND
	ug/L	07/12/06	--	--	10	18.4	ND
	ug/L	01/18/07	2.0	10.0	10	ND	ND
	ug/L	07/10/07	2.0	10.0	10	ND	ND
	ug/L	01/15/08	2.0	10.0	10	21.8	ND
Barium	ug/L	04/07/99	--	--	500	ND	--
	ug/L	12/08/99	--	--	500	ND	--
	ug/L	04/27/00	--	--	500	ND	--
	ug/L	10/18/00	--	--	500	--	--
	ug/L	11/28/00	--	--	500	--	--
	ug/L	01/03/01	--	--	500	--	--
	ug/L	02/08/01	--	--	500	--	--
	ug/L	04/19/01	--	--	500	--	--
	ug/L	12/24/01	--	--	500	--	--
	ug/L	04/23/02	--	--	500	--	--
	ug/L	10/23/02	--	--	500	--	--
	ug/L	04/01/03	--	--	500	--	--
	ug/L	09/02/03	--	--	500	--	--
	ug/L	10/28/03	--	--	500	--	--
	ug/L	04/27/04	--	--	500	--	--
	ug/L	10/26/04	--	--	500	--	--
	ug/L	03/15/05	--	--	500	630	ND
	ug/L	07/13/05	--	--	500	510	ND
	ug/L	01/20/06	--	--	500	883	ND
	ug/L	07/12/06	--	--	500	678	ND
	ug/L	01/18/07	0.20	10.0	100	624	ND
	ug/L	07/10/07	0.20	10.0	100	547	ND
	ug/L	01/15/08	0.20	10.0	100	645	0.3 J

TABLE 7

Summary of Leachate Monitoring Results
Detected Constituents
East Carolina Regional Landfill, Permit No. 08-03
Bertie County, North Carolina

Detected Monitoring Constituents/Parameters	Reporting Units	Sample Date	Detection Limit	Quantitation Limit	SWS Reporting Limit	Leachate	Blanks
Cobalt	ug/L	04/07/99	--	--	10	10	--
	ug/L	12/08/99	--	--	10	60	--
	ug/L	04/27/00	--	--	10	10	--
	ug/L	10/18/00	--	--	10	--	--
	ug/L	11/28/00	--	--	10	--	--
	ug/L	01/03/01	--	--	10	--	--
	ug/L	02/08/01	--	--	10	--	--
	ug/L	04/19/01	--	--	10	--	--
	ug/L	12/24/01	--	--	10	--	--
	ug/L	04/23/02	--	--	10	--	--
	ug/L	10/23/02	--	--	10	--	--
	ug/L	04/01/03	--	--	10	--	--
	ug/L	09/02/03	--	--	10	--	--
	ug/L	10/28/03	--	--	10	--	--
	ug/L	04/27/04	--	--	10	--	--
	ug/L	10/26/04	--	--	10	--	--
	ug/L	03/15/05	--	--	10	43	ND
	ug/L	07/13/05	--	--	10	40	ND
	ug/L	01/20/06	--	--	10	60	ND
	ug/L	07/12/06	--	--	10	63.5	ND
	ug/L	01/18/07	2.0	10.0	10	16.1	ND
	ug/L	07/10/07	2.0	10.0	10	18.3	ND
	ug/L	01/15/08	2.0	10.0	10	23.0	ND
Lead	ug/L	10/18/00	--	--	10	--	--
	ug/L	11/28/00	--	--	10	--	--
	ug/L	01/03/01	--	--	10	--	--
	ug/L	02/08/01	--	--	10	--	--
	ug/L	04/19/01	--	--	10	--	--
	ug/L	12/24/01	--	--	10	--	--
	ug/L	04/23/02	--	--	10	--	--
	ug/L	10/23/02	--	--	10	--	--
	ug/L	04/01/03	--	--	10	--	--
	ug/L	09/02/03	--	--	10	--	--
	ug/L	10/28/03	--	--	10	--	--
	ug/L	04/27/04	--	--	10	--	--
	ug/L	07/13/05	--	--	10	ND	ND
	ug/L	01/20/06	--	--	10	ND	ND
	ug/L	03/15/06	--	--	10	ND	ND
	ug/L	07/12/06	--	--	10	13.0	ND
	ug/L	10/26/06	--	--	10	--	--
	ug/L	01/18/07	2.0	10.0	10	ND	ND
	ug/L	07/10/07	2.0	10.0	10	ND	ND
	ug/L	01/15/08	2.0	10.0	10	ND	ND

TABLE 7

Summary of Leachate Monitoring Results
Detected Constituents
East Carolina Regional Landfill, Permit No. 08-03
Bertie County, North Carolina

Detected Monitoring Constituents/Parameters	Reporting Units	Sample Date	Detection Limit	Quantitation Limit	SWS Reporting Limit	Leachate		Blanks
Nickel	ug/L	04/07/99	--	--	50	ND		--
	ug/L	12/08/99	--	--	50	30		--
	ug/L	04/27/00	--	--	50	50		--
	ug/L	10/18/00	--	--	50	--		--
	ug/L	11/28/00	--	--	50	--		--
	ug/L	01/03/01	--	--	50	--		--
	ug/L	02/08/01	--	--	50	--		--
	ug/L	04/19/01	--	--	50	--		--
	ug/L	12/24/01	--	--	50	--		--
	ug/L	04/23/02	--	--	50	--		--
	ug/L	10/23/02	--	--	50	--		--
	ug/L	04/01/03	--	--	50	--		--
	ug/L	09/02/03	--	--	50	--		--
	ug/L	10/28/03	--	--	50	--		--
	ug/L	04/27/04	--	--	50	--		--
	ug/L	10/26/04	--	--	50	--		--
	ug/L	03/15/05	--	--	50	85		ND
	ug/L	07/13/05	--	--	50	86		ND
	ug/L	01/20/06	--	--	50	74		ND
	ug/L	07/12/06	--	--	50	ND		ND
	ug/L	01/18/07	2.0	10.0	50	72.2		ND
	ug/L	07/10/07	2.0	10.0	50	75.8		ND
	ug/L	01/15/08	2.0	10.0	50	91.6		ND
Selenium	ug/L	07/13/05	--	--	20	ND		ND
	ug/L	01/20/06	--	--	20	ND		ND
	ug/L	07/12/06	--	--	20	ND		ND
	ug/L	01/18/07	2.0	10.0	10	ND		ND
	ug/L	07/10/07	2.0	10.0	10	ND		ND
	ug/L	01/15/08	2.0	10.0	10	3.2	J	ND
Thallium	ug/L	10/18/00	--	--	10	--		--
	ug/L	11/28/00	--	--	10	--		--
	ug/L	01/03/01	--	--	10	--		--
	ug/L	02/08/01	--	--	10	--		--
	ug/L	04/19/01	--	--	10	--		--
	ug/L	12/24/01	--	--	10	--		--
	ug/L	04/23/02	--	--	10	--		--
	ug/L	10/23/02	--	--	10	--		--
	ug/L	04/01/03	--	--	10	--		--
	ug/L	09/02/03	--	--	10	--		--
	ug/L	10/28/03	--	--	10	--		--
	ug/L	04/27/04	--	--	10	--		--
	ug/L	07/13/05	--	--	10	ND		ND
	ug/L	01/20/06	--	--	10	16		ND
	ug/L	03/15/06	--	--	10	ND		ND
	ug/L	07/12/06	--	--	10	22		ND
	ug/L	10/26/06	--	--	10	--		--
	ug/L	01/18/07	0.044	0.050	5.5	0.046	J	ND
	ug/L	07/10/07	0.036	0.050	5.5	ND		ND
	ug/L	01/15/08	0.036	1.00	5.5	ND		ND
Vanadium	ug/L	07/13/05	--	--	40	ND		ND
	ug/L	01/20/06	--	--	40	ND		ND
	ug/L	07/12/06	--	--	40	ND		ND
	ug/L	01/18/07	1.0	10.0	25	24.6		ND
	ug/L	07/10/07	1.0	10.0	25	39.7		ND
	ug/L	01/15/08	1.0	10.0	25	55.4		ND

TABLE 7

Summary of Leachate Monitoring Results
Detected Constituents
East Carolina Regional Landfill, Permit No. 08-03
Bertie County, North Carolina

Detected Monitoring Constituents/Parameters	Reporting Units	Sample Date	Detection Limit	Quantitation Limit	SWS Reporting Limit	Leachate	Blanks
Zinc	ug/L	04/07/99	--	--	50	50	--
	ug/L	12/08/99	--	--	50	160	--
	ug/L	04/27/00	--	--	50	30	--
	ug/L	10/18/00	--	--	50	--	--
	ug/L	11/28/00	--	--	50	--	--
	ug/L	01/03/01	--	--	50	--	--
	ug/L	02/08/01	--	--	50	--	--
	ug/L	04/19/01	--	--	50	--	--
	ug/L	12/24/01	--	--	50	--	--
	ug/L	04/23/02	--	--	50	--	--
	ug/L	10/23/02	--	--	50	--	--
	ug/L	04/01/03	--	--	50	--	--
	ug/L	09/02/03	--	--	50	--	--
	ug/L	10/28/03	--	--	50	--	--
	ug/L	04/27/04	--	--	50	--	--
	ug/L	10/26/04	--	--	50	--	--
	ug/L	03/15/05	--	--	50	120	ND
	ug/L	07/13/05	--	--	50	100	ND
	ug/L	01/20/06	--	--	50	63	ND
	ug/L	07/12/06	--	--	50	99.6	ND
	ug/L	01/18/07	1.0	10.0	10	22.1	4.8 J
	ug/L	07/10/07	1.0	10.0	10	37.5	ND
	ug/L	01/15/08	1.0	10.0	10	15.2	1.3 J
Acetone	ug/L	04/07/99	--	--	100	830	--
	ug/L	12/08/99	--	--	100	4300	--
	ug/L	04/27/00	--	--	100	2000	--
	ug/L	10/18/00	--	--	100	--	--
	ug/L	11/28/00	--	--	100	--	--
	ug/L	01/03/01	--	--	100	--	--
	ug/L	02/08/01	--	--	100	--	--
	ug/L	04/19/01	--	--	100	--	--
	ug/L	12/24/01	--	--	100	--	--
	ug/L	04/23/02	--	--	100	--	--
	ug/L	10/23/02	--	--	100	--	--
	ug/L	04/01/03	--	--	100	--	--
	ug/L	09/02/03	--	--	100	--	--
	ug/L	10/28/03	--	--	100	--	--
	ug/L	04/27/04	--	--	100	--	--
	ug/L	10/26/04	--	--	100	--	--
	ug/L	03/15/05	--	--	100	28000	ND
	ug/L	07/13/05	--	--	100	2000	ND
	ug/L	01/20/06	--	--	11000	11200	ND
	ug/L	07/12/06	--	--	100	4810	ND
	ug/L	01/18/07	0.90	5.0	100	13000	ND
	ug/L	07/10/07	4.5	25	100	27 J	ND
	ug/L	01/15/08	45	250	100	6700	ND

TABLE 7

Summary of Leachate Monitoring Results
Detected Constituents
East Carolina Regional Landfill, Permit No. 08-03
Bertie County, North Carolina

Detected Monitoring Constituents/Parameters	Reporting Units	Sample Date	Detection Limit	Quantitation Limit	SWS Reporting Limit	Leachate		Blanks
Benzene	ug/L	04/07/99	--	--	5	ND		--
	ug/L	12/08/99	--	--	5	5		--
	ug/L	04/27/00	--	--	5	ND		--
	ug/L	10/18/00	--	--	5	--		--
	ug/L	11/28/00	--	--	5	--		--
	ug/L	01/03/01	--	--	5	--		--
	ug/L	02/08/01	--	--	5	--		--
	ug/L	04/19/01	--	--	5	--		--
	ug/L	12/24/01	--	--	5	--		--
	ug/L	04/23/02	--	--	5	--		--
	ug/L	10/23/02	--	--	5	--		--
	ug/L	04/01/03	--	--	5	--		--
	ug/L	09/02/03	--	--	5	--		--
	ug/L	10/28/03	--	--	5	--		--
	ug/L	04/27/04	--	--	5	--		--
	ug/L	10/26/04	--	--	5	--		--
	ug/L	03/15/05	--	--	500	ND		ND
	ug/L	07/13/05	--	--	5	ND		ND
	ug/L	01/20/06	--	--	550	ND		ND
	ug/L	07/12/06	--	--	5	ND		ND
	ug/L	01/18/07	0.12	1.0	3	ND		ND
	ug/L	07/10/07	0.60	5.0	1	2.0	J	ND
	ug/L	01/15/08	6.0	50	1	ND		ND
1,4-Dichlorobenzene	ug/L	04/07/99	--	--	5	ND		--
	ug/L	12/08/99	--	--	5	5		--
	ug/L	04/27/00	--	--	5	7		--
	ug/L	10/18/00	--	--	5	--		--
	ug/L	11/28/00	--	--	5	--		--
	ug/L	01/03/01	--	--	5	--		--
	ug/L	02/08/01	--	--	5	--		--
	ug/L	04/19/01	--	--	5	--		--
	ug/L	12/24/01	--	--	5	--		--
	ug/L	04/23/02	--	--	5	--		--
	ug/L	10/23/02	--	--	5	--		--
	ug/L	04/01/03	--	--	5	--		--
	ug/L	09/02/03	--	--	5	--		--
	ug/L	10/28/03	--	--	5	--		--
	ug/L	04/27/04	--	--	5	--		--
	ug/L	10/26/04	--	--	5	--		--
	ug/L	03/15/05	--	--	500	ND		ND
	ug/L	07/13/05	--	--	5	ND		ND
	ug/L	01/20/06	--	--	550	ND		ND
	ug/L	07/12/06	--	--	5	ND		ND
	ug/L	01/18/07	0.15	1.0	3	ND		ND
	ug/L	07/10/07	0.75	5.0	1	6.6		ND
	ug/L	01/15/08	7.5	50	1	ND		ND

TABLE 7

Summary of Leachate Monitoring Results
Detected Constituents
East Carolina Regional Landfill, Permit No. 08-03
Bertie County, North Carolina

Detected Monitoring Constituents/Parameters	Reporting Units	Sample Date	Detection Limit	Quantitation Limit	SWS Reporting Limit	Leachate	Blanks
1,1-Dichloroethane	ug/L	04/07/99	--	--	5	9	--
	ug/L	12/08/99	--	--	5	9	--
	ug/L	04/27/00	--	--	5	ND	--
	ug/L	10/18/00	--	--	5	--	--
	ug/L	11/28/00	--	--	5	--	--
	ug/L	01/03/01	--	--	5	--	--
	ug/L	02/08/01	--	--	5	--	--
	ug/L	04/19/01	--	--	5	--	--
	ug/L	12/24/01	--	--	5	--	--
	ug/L	04/23/02	--	--	5	--	--
	ug/L	10/23/02	--	--	5	--	--
	ug/L	04/01/03	--	--	5	--	--
	ug/L	09/02/03	--	--	5	--	--
	ug/L	10/28/03	--	--	5	--	--
	ug/L	04/27/04	--	--	5	--	--
	ug/L	10/26/04	--	--	5	--	--
	ug/L	03/15/05	--	--	500	ND	ND
	ug/L	07/13/05	--	--	5	ND	ND
	ug/L	01/20/06	--	--	550	ND	ND
	ug/L	07/12/06	--	--	5	ND	ND
	ug/L	01/18/07	0.090	1.0	5	ND	ND
	ug/L	07/10/07	0.45	5.0	5	ND	ND
	ug/L	01/15/08	4.5	50	5	ND	ND
Ethylbenzene	ug/L	04/07/99	--	--	5	26	--
	ug/L	12/08/99	--	--	5	49	--
	ug/L	04/27/00	--	--	5	35	--
	ug/L	10/18/00	--	--	5	--	--
	ug/L	11/28/00	--	--	5	--	--
	ug/L	01/03/01	--	--	5	--	--
	ug/L	02/08/01	--	--	5	--	--
	ug/L	04/19/01	--	--	5	--	--
	ug/L	12/24/01	--	--	5	--	--
	ug/L	04/23/02	--	--	5	--	--
	ug/L	10/23/02	--	--	5	--	--
	ug/L	04/01/03	--	--	5	--	--
	ug/L	09/02/03	--	--	5	--	--
	ug/L	10/28/03	--	--	5	--	--
	ug/L	04/27/04	--	--	5	--	--
	ug/L	10/26/04	--	--	5	--	--
	ug/L	03/15/05	--	--	500	ND	ND
	ug/L	07/13/05	--	--	5	ND	ND
	ug/L	01/20/06	--	--	550	ND	ND
	ug/L	07/12/06	--	--	5	ND	ND
	ug/L	01/18/07	0.17	1.0	5	35 J	ND
	ug/L	07/10/07	0.85	5.0	1	15	ND
	ug/L	01/15/08	8.5	50	1	29 J	ND
2-Hexanone	ug/L	07/13/05	--	--	50	ND	ND
	ug/L	01/20/06	--	--	5500	ND	ND
	ug/L	07/12/06	--	--	50	ND	ND
	ug/L	01/18/07	0.24	5.0	50	17 J	ND
	ug/L	07/10/07	1.2	25	50	ND	ND
	ug/L	01/15/08	12	250	50	ND	ND

TABLE 7

Summary of Leachate Monitoring Results
Detected Constituents
East Carolina Regional Landfill, Permit No. 08-03
Bertie County, North Carolina

Detected Monitoring Constituents/Parameters	Reporting Units	Sample Date	Detection Limit	Quantitation Limit	SWS Reporting Limit	Leachate	Blanks
Methylene chloride	ug/L	04/07/99	--	--	10	68	--
	ug/L	12/08/99	--	--	10	21	--
	ug/L	04/27/00	--	--	10	ND	--
	ug/L	10/18/00	--	--	10	--	--
	ug/L	11/28/00	--	--	10	--	--
	ug/L	01/03/01	--	--	10	--	--
	ug/L	02/08/01	--	--	10	--	--
	ug/L	04/19/01	--	--	10	--	--
	ug/L	12/24/01	--	--	10	--	--
	ug/L	04/23/02	--	--	10	--	--
	ug/L	10/23/02	--	--	10	--	--
	ug/L	04/01/03	--	--	10	--	--
	ug/L	09/02/03	--	--	10	--	--
	ug/L	10/28/03	--	--	10	--	--
	ug/L	04/27/04	--	--	10	--	--
	ug/L	10/26/04	--	--	10	--	--
	ug/L	03/15/05	--	--	1000	ND	ND
	ug/L	07/13/05	--	--	10	ND	ND
	ug/L	01/20/06	--	--	1100	ND	ND
	ug/L	07/12/06	--	--	10	ND	ND
	ug/L	01/18/07	0.088	2.0	5.5	ND	ND
	ug/L	07/10/07	0.44	5.0	1	ND	ND
	ug/L	01/15/08	4.4	50	1	ND	ND
2-Butanone	ug/L	04/07/99	--	--	100	660	--
(Methyl Ethyl Ketone)	ug/L	12/08/99	--	--	100	12000	--
	ug/L	04/27/00	--	--	100	4400	--
	ug/L	10/18/00	--	--	100	--	--
	ug/L	11/28/00	--	--	100	--	--
	ug/L	01/03/01	--	--	100	--	--
	ug/L	02/08/01	--	--	100	--	--
	ug/L	04/19/01	--	--	100	--	--
	ug/L	12/24/01	--	--	100	--	--
	ug/L	04/23/02	--	--	100	--	--
	ug/L	10/23/02	--	--	100	--	--
	ug/L	04/01/03	--	--	100	--	--
	ug/L	09/02/03	--	--	100	--	--
	ug/L	10/28/03	--	--	100	--	--
	ug/L	04/27/04	--	--	100	--	--
	ug/L	10/26/04	--	--	100	--	--
	ug/L	03/15/05	--	--	100	34000	ND
	ug/L	07/13/05	--	--	100	1800	ND
	ug/L	01/20/06	--	--	11000	16600	ND
	ug/L	07/12/06	--	--	100	7870	ND
	ug/L	01/18/07	0.56	5.0	100	7300	ND
	ug/L	07/10/07	2.8	25	100	ND	ND
	ug/L	01/15/08	28	250	100	7800	ND

TABLE 7

Summary of Leachate Monitoring Results
Detected Constituents
East Carolina Regional Landfill, Permit No. 08-03
Bertie County, North Carolina

Detected Monitoring Constituents/Parameters	Reporting Units	Sample Date	Detection Limit	Quantitation Limit	SWS Reporting Limit	Leachate		Blanks
4-Methyl-2-pentanone	ug/L	04/07/99	--	--	100	ND		--
	ug/L	12/08/99	--	--	100	ND		--
	ug/L	04/27/00	--	--	100	110		--
	ug/L	10/18/00	--	--	100	--		--
	ug/L	11/28/00	--	--	100	--		--
	ug/L	01/03/01	--	--	100	--		--
	ug/L	02/08/01	--	--	100	--		--
	ug/L	04/19/01	--	--	100	--		--
	ug/L	12/24/01	--	--	100	--		--
	ug/L	04/23/02	--	--	100	--		--
	ug/L	10/23/02	--	--	100	--		--
	ug/L	04/01/03	--	--	100	--		--
	ug/L	09/02/03	--	--	100	--		--
	ug/L	10/28/03	--	--	100	--		--
	ug/L	04/27/04	--	--	100	--		--
	ug/L	10/26/04	--	--	100	--		--
	ug/L	03/15/05	--	--	10000	ND		ND
	ug/L	07/13/05	--	--	100	ND		ND
	ug/L	01/20/06	--	--	11000	ND		ND
	ug/L	07/12/06	--	--	100	ND		ND
	ug/L	01/18/07	0.36	5.0	100	95	J	ND
	ug/L	07/10/07	1.8	25	100	7.4	J	ND
	ug/L	01/15/08	18	250	100	ND		ND
Toluene	ug/L	04/07/99	--	--	5	100		--
	ug/L	12/08/99	--	--	5	150		--
	ug/L	04/27/00	--	--	5	120		--
	ug/L	10/18/00	--	--	5	--		--
	ug/L	11/28/00	--	--	5	--		--
	ug/L	01/03/01	--	--	5	--		--
	ug/L	02/08/01	--	--	5	--		--
	ug/L	04/19/01	--	--	5	--		--
	ug/L	12/24/01	--	--	5	--		--
	ug/L	04/23/02	--	--	5	--		--
	ug/L	10/23/02	--	--	5	--		--
	ug/L	04/01/03	--	--	5	--		--
	ug/L	09/02/03	--	--	5	--		--
	ug/L	10/28/03	--	--	5	--		--
	ug/L	04/27/04	--	--	5	--		--
	ug/L	10/26/04	--	--	5	--		--
	ug/L	03/15/05	--	--	500	ND		ND
	ug/L	07/13/05	--	--	5	ND		ND
	ug/L	01/20/06	--	--	550	ND		ND
	ug/L	07/12/06	--	--	5	255		ND
	ug/L	01/18/07	0.15	1.0	5	36	J	ND
	ug/L	07/10/07	0.75	5.0	1	9.0		ND
	ug/L	01/15/08	7.5	50	1	35	J	ND

TABLE 7

Summary of Leachate Monitoring Results
Detected Constituents
East Carolina Regional Landfill, Permit No. 08-03
Bertie County, North Carolina

Detected Monitoring Constituents/Parameters	Reporting Units	Sample Date	Detection Limit	Quantitation Limit	SWS Reporting Limit	Leachate		Blanks	
Xylenes (total)	ug/L	04/07/99	--	--	5	30		--	
	ug/L	12/08/99	--	--	5	62		--	
	ug/L	04/27/00	--	--	5	56		--	
	ug/L	10/18/00	--	--	5	--		--	
	ug/L	11/28/00	--	--	5	--		--	
	ug/L	01/03/01	--	--	5	--		--	
	ug/L	02/08/01	--	--	5	--		--	
	ug/L	04/19/01	--	--	5	--		--	
	ug/L	12/24/01	--	--	5	--		--	
	ug/L	04/23/02	--	--	5	--		--	
	ug/L	10/23/02	--	--	5	--		--	
	ug/L	04/01/03	--	--	5	--		--	
	ug/L	09/02/03	--	--	5	--		--	
	ug/L	10/28/03	--	--	5	--		--	
	ug/L	04/27/04	--	--	5	--		--	
	ug/L	10/26/04	--	--	5	--		--	
	ug/L	03/15/05	--	--	500	ND		ND	
	ug/L	07/13/05	--	--	5	ND		ND	
	ug/L	01/20/06	--	--	550	ND		ND	
	ug/L	07/12/06	--	--	5	ND		ND	
	ug/L	01/18/07	0.14	3.0	--	60	J	ND	
	ug/L	07/10/07	1.0	5.0	4	22		ND	
	ug/L	01/15/08	10	50	5	42	J	ND	
Oil & Grease	mg/L	01/20/06	--	--	2	5		ND	
	mg/L	07/12/06	--	--	2	19		ND	
	mg/L	01/18/07	2	2	--	5		ND	
	mg/L	07/10/07	3	5	--	ND		ND	
	mg/L	01/15/08	3.00	5.00	NE	9.15		ND	
Phenols	mg/L	03/15/05	--	--	0.05	0.84		ND	
	mg/L	01/20/06	--	--	0.2	1		ND	
	mg/L	07/12/06	--	--	0.1	1		ND	
	mg/L	01/18/07	0.01	0.05	--	0.92		ND	
	mg/L	07/10/07	0.02	0.05	--	0.03	J	ND	
	mg/L	01/15/08	0.03	0.10	NE	1.1		ND	
Total Kjeldahl Nitrogen	mg/L	03/15/05	--	--	0.05	480		ND	
	mg/L	01/20/06	--	--	1	495		ND	
	mg/L	07/12/06	--	--	0.05	396		ND	
	mg/L	01/18/07	4.0	5.0	--	440		ND	
	mg/L	07/10/07	22	25	--	570		ND	
	mg/L	01/15/08	22	25	NE	560		0.088	
Nitrate as N	mg/L	07/13/05	--	--	0.1	ND		ND	
	mg/L	01/20/06	--	--	0.05	ND		ND	
	mg/L	07/12/06	--	--	0.05	ND		ND	
	mg/L	07/10/07	0.0066	0.10	--	ND		ND	
	mg/L	01/15/08	0.010	0.10	10	0.025	B	0.014	J
Nitrite as N	mg/L	01/15/08	0.010	0.10	1	0.019	J	ND	
Sulfate	mg/L	07/13/05	--	--	2	ND		ND	
	mg/L	01/20/06	--	--	2	ND		ND	
	mg/L	07/12/06	--	--	2	6.23		ND	
	mg/L	01/18/07	0.60	5.00	--	29.3		2.25	J
	mg/L	07/10/07	0.60	5.0	--	34		1.1	
	mg/L	01/15/08	0.06	4.0	250	5.6	J	ND	

TABLE 7

Summary of Leachate Monitoring Results
Detected Constituents
East Carolina Regional Landfill, Permit No. 08-03
Bertie County, North Carolina

Detected Monitoring Constituents/Parameters	Reporting Units	Sample Date	Detection Limit	Quantitation Limit	SWS Reporting Limit	Leachate	Blanks
Biochemical Oxygen Demand	mg/L	03/15/05	--	--	2	1300	ND
	mg/L	07/13/05	--	--	2	220 J	ND
	mg/L	01/20/06	--	--	2	1910	ND
	mg/L	07/12/06	--	--	2	1770	ND
	mg/L	01/18/07	2	2	--	593	ND
	mg/L	07/10/07	2.0	2.0	--	97	ND
	mg/L	01/15/08	2.0	2.0	NE	620	ND
Chemical Oxygen Demand	mg/L	03/15/05	--	--	10	2500	ND
	mg/L	07/13/05	--	--	10	1120	ND
	mg/L	01/20/06	--	--	--	--	--
	mg/L	02/27/06	--	--	40	1710	ND
	mg/L	07/12/06	--	--	10	2990	ND
	mg/L	01/18/07	10	10	--	1810	ND
	mg/L	07/10/07	10	10	--	980	ND
	mg/L	01/15/08	20	20	NE	1600	ND
Total Suspended Solids	mg/L	03/15/05	--	--	2	140	ND
	mg/L	07/13/05	--	--	--	--	--
	mg/L	01/20/06	--	--	--	--	--
	mg/L	07/12/06	--	--	2	264	ND
	mg/L	01/18/07	1	1	--	45	ND
	mg/L	07/10/07	1.0	1.0	--	21	ND
	mg/L	01/15/08	1.0	1.0	NE	26	ND
Phosphorus (Total)	mg/L	03/15/05	--	--	0.03	1.8	ND
	mg/L	07/13/05	--	--	0.03	2.2	ND
	mg/L	01/20/06	--	--	0.1	2	ND
	mg/L	07/12/06	--	--	0.03	1	ND
	mg/L	01/18/07	0.020	0.030	--	1.7	ND
	mg/L	07/10/07	0.020	0.030	--	2.8	ND
	mg/L	01/15/08	0.020	0.030	NE	2.6	ND
pH (Field)	S.U.	04/07/99	--	--	--	6.82	--
	S.U.	03/15/05	--	--	--	6.34	--
	S.U.	07/13/05	--	--	--	7.36	--
	S.U.	01/20/06	--	--	--	9.48	--
	S.U.	07/12/06	--	--	--	7.22	--
	S.U.	01/18/07	--	--	--	6.00	--
	S.U.	07/10/07	--	--	--	8.31	--
	S.U.	01/15/08	--	--	--	7.53	--
Specific Conductance (Field)	mS/cm	04/07/99	--	--	--	2061	--
	mS/cm	03/15/05	--	--	--	6310	--
	mS/cm	07/13/05	--	--	--	14.5	--
	mS/cm	01/20/06	--	--	--	4940	--
	mS/cm	07/12/06	--	--	--	7.94	--
	mS/cm	01/18/07	--	--	--	3.40	--
	mS/cm	07/10/07	--	--	--	9.80	--
	mS/cm	01/15/08	--	--	--	13.1	--

TABLE 7

Summary of Leachate Monitoring Results
Detected Constituents
East Carolina Regional Landfill, Permit No. 08-03
Bertie County, North Carolina

Detected Monitoring Constituents/Parameters	Reporting Units	Sample Date	Detection Limit	Quantitation Limit	SWS Reporting Limit	Leachate	Blanks
Temperature (Field)	°C	03/15/05	--	--	--	12.8	--
	°C	07/13/05	--	--	--	28.82	--
	°C	01/20/06	--	--	--	16.07	--
	°C	07/12/06	--	--	--	30.0	--
	°C	01/18/07	--	--	--	7.0	--
	°C	07/10/07	--	--	--	33.2	--
	°C	01/15/08	--	--	--	9.95	--
Turbidity	NTU	01/15/08	--	--	--	800.7	--

Notes:
mg/L = milligrams per liter
ug/L = micrograms per liter
S.U. = Standard Units
NTU = Nephelometric Turbidity Units
ND = Not detected at the stated reporting limit
NE = Not Established
mS/cm= millisiemens per cubic centimeter
mV = Millivolts
J = Estimated value/not quantified
-- = no data
Blanks = field, trip and method blanks
SWS Reporting Limit = NCPQL prior to 2007 and NCSWSL starting in 01/18/07
*The following dilutions were noted for the 01/15/2008 event:
VOCs 5x, Phenolics and Sulfate 2x, TKN 500x

DRAWING

LEGEND

- EXISTING CONTOUR
- PROPERTY BOUNDARY
- 100' BUFFER
- LIMITS OF WASTE
- GROUNDWATER SURFACE CONTOURS — 48
- APPROXIMATE GROUNDWATER FLOW SEGMENT USED TO CALCULATE GRADIENT — i_1
- GROUNDWATER MONITORING WELL WITH GROUNDWATER ELEVATION — GW-2 50.15
- SURFACE WATER MONITORING POINT — SW-1
- METHANE MONITORING WELL — MM-1
- PRIVATE WATER SUPPLY WELL — PW-1

NOTES:

1. TOPOGRAPHIC CONTOUR INTERVAL = 2 FEET.
2. GROUNDWATER SURFACE CONTOUR INTERVAL = 1 FOOT.
3. GROUNDWATER ELEVATIONS MEASURED ON JANUARY 14-15, 2008.
4. GROUND WATER CONTOURS ARE BASED ON LINEAR INTERPOLATION BETWEEN AND EXTRAPOLATION FROM KNOWN DATA, TOPOGRAPHIC CONTOURS, AND KNOWN FIELD CONDITIONS. THEREFORE, GROUNDWATER CONTOURS MAY NOT REFLECT ACTUAL GROUNDWATER CONDITIONS.
5. GROUNDWATER CONTOUR LINES SHOW THE WATER TABLE SHAPE AND ELEVATION. THESE CONTOURS ARE INFERRED LINES FOLLOWING THE GROUNDWATER SURFACE AT A CONSTANT ELEVATION ABOVE SEA LEVEL. THE GROUNDWATER FLOW DIRECTION IS GENERALLY PERPENDICULAR TO THE GROUNDWATER SURFACE CONTOURS, SIMILAR TO THE RELATIONSHIP BETWEEN SURFACE WATER FLOW AND TOPOGRAPHIC CONTOURS.
6. MONITORING WELLS GW-1, GW-4, GW-6 AND GW-12 ARE SCREENED IN IN THE LOWER BLACK CREEK FORMATION AND GROUNDWATER ELEVATION DATA WERE NOT USED IN THE CONSTRUCTION OF CONTOURS.
7. THE LOCATION OF PW-1 IS APPROXIMATE.
8. GW-16 WAS DECOMMISSIONED FOLLOWING THE JULY 2007 EVENT AND GW-16R WAS INSTALLED AS A REPLACEMENT WELL.
9. GROUNDWATER ELEVATION DATA FOR GW-10 IS CONSIDERED ANAMOLOUS AND WAS NOT USED IN THE CONSTRUCTION OF GROUNDWATER CONTOURS FOR THE JANUARY 2008 EVENT.

DATE OF PHOTOGRAPHY: 4/4/2004
CONTOUR INTERVAL: TWO (2) FEET
HORIZONTAL DATUM: LOCAL COORDINATE SYSTEM
VERTICAL DATUM: NAVD88
THIS TOPOGRAPHIC BASE MAP WAS PRODUCED BY BEI AERIAL MAPPING, PEACHTREE CITY, GEORGIA FOR HODGES, HARBIN, NEWBERRY & TRIBBLE, INC. OF THE EAST CAROLINA REGIONAL MSWLF, BERTIE COUNTY, NORTH CAROLINA
HHNT PROJECT # 1001-100-01 (EAST CAROLINA REGIONAL MSWLF)
BEI PROJECT # 1040330

200 0 200 400
SCALE FEET

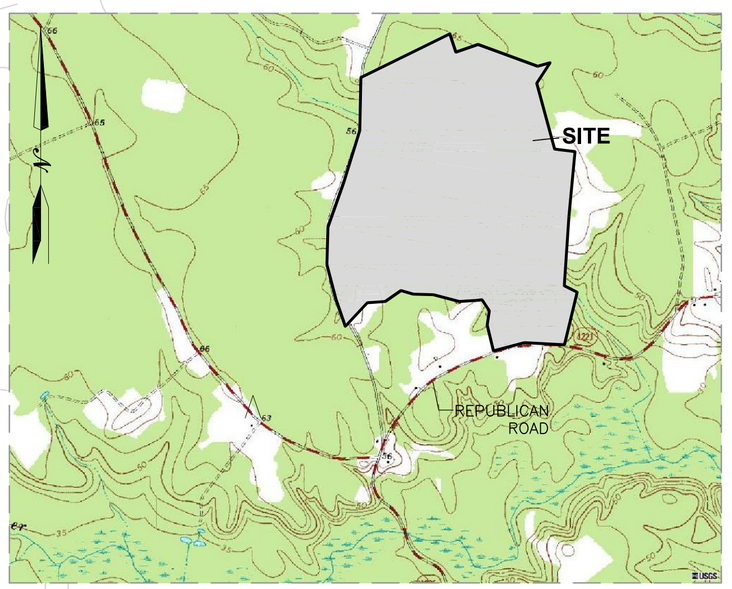

SITE LOCATION MAP
1.0 0 1.0
SCALE MILE
(SCALE IS APPROXIMATE)

REV	DATE	DES	REVISION DESCRIPTION	CADD	CHK
6	01/31/08	JAD	UPDATE GROUNDWATER CONTOURS	LKB	
5	08/14/07		UPDATE GROUNDWATER CONTOURS	LKB	BD	RPK
4	01/31/07		UPDATE GROUNDWATER CONTOURS	LKB	BD	RPK
3	08/02/06		UPDATE GROUNDWATER CONTOURS	JCB	DYR	RPK
2	03/17/06		UPDATE GROUNDWATER CONTOURS	JCB	DYR	RPK
1	09/05		UPDATE GROUND WATER CONTOURS	JCB	RPK	RPK

GOLDER ASSOCIATES NC, INC.

PROJECT
EAST CAROLINA REGIONAL MSW LANDFILL
REPUBLIC SERVICES OF NORTH CAROLINA, LLC
BERTIE COUNTY, NORTH CAROLINA

TITLE
JANUARY 14-15, 2008 YORKTOWN FORMATION GROUNDWATER CONTOUR MAP

PROJECT No.		053-6620
FILE No.		0536620A01
REV.	SCALE	AS SHOWN
DESIGN	DYR	08/17/07
CADD	LKB	08/17/07
CHECK	JAD	01/31/08
REVIEW	RPK	01/31/08

DWG. 01

Drawing file: 053-6620 LKB 2 26 08.dwg Feb 26, 2008 - 3:35pm

APPENDIX I

GROUNDWATER, SURFACE WATER, AND LEACHATE SAMPLING LOGS

Golder Associates

DATE: *1/14/2008*

GROUNDWATER SAMPLING LOG

Project Name: *East Carolina LF*
Project No./Phase No.: *053-6620008.100*
Well ID: *GW-2*
Sampler(s): *K. Higgs / R. Stringfellow*
Well Diameter: *2* **inches**
Int. Depth to Water: *16.21* **feet**
Depth to Bottom: *30* **feet**
H_20 Column Thickness: *13.79* **feet**
Pumping Rate: *300* **mL/min.**
System Volume: *1100* **mL**
Well Location: *Southern side of LF in woods near the road*
Equipment: *Horiba WQM, QED MP-15 Micropurge Control and Power Pack, and WL indicator*

Time	pH (S.U.)	Cond. (mS/cm)	Turb. (NTU)	Dis O2 (mg/L)	Temp. (oC)	ORP (millivolts)	DTW (feet)
11:47	3.90	0.216	61.1	8.35	15.85	368	16.53
11:49	4.03	0.205	1.7	7.99	16.15	369	16.55
11:51	4.12	0.207	6.8	7.95	16.21	369	16.55
11:53	4.21	0.209	18.9	7.96	16.27	369	16.56
11:55	4.34	0.212	7.31	8.12	16.26	363	16.57
Sampled @ 11:55							
12:00	4.58	0.215	7.05	7.95	16.01	353	16.57

Comments (weather conditions, color, type of sample, purge-water management, etc.):
1/14/08 - Temp: 45 °F; Dew Point: 41°F; Precip: 0.0 in; Pressure: 29.94 in Hg; Wind: 0 mph Max Wind Speed: 7 mph; Events: Rain

Signature: [signature] **Date:** 01/14/2008
QA/QC Sign Off: [signature] **Date:** 2/4/08

Golder Associates

DATE: *1/14/2008*

GROUNDWATER SAMPLING LOG

Project Name: *East Carolina LF*
Project No./Phase No.: *053-6620008.100*
Well ID: *GW-7*
Sampler(s): *K. Higgs / R. Stringfellow*
Well Diameter: *2* **inches**
Int. Depth to Water: *14.03* **feet**
Depth to Bottom: *18* **feet**
H_20 Column Thickness: *3.97* **feet**
Pumping Rate: *150* **mL/min.**
System Volume: *860* **mL**
Well Location: *Front side of landfill next to road inside gate.*
Equipment: *Horiba WQM, QED MP-15 Micropurge Control and Power Pack, and WL indicator*

Time	pH (S.U.)	Cond. (mS/cm)	Turb. (NTU)	Dis O2 (mg/L)	Temp. (oC)	ORP (millivolts)	DTW (feet)
13:50	4.28	0.376	24.1	6.71	17.01	369	14.05
13:54	4.27	0.441	24.8	5.05	17.33	384	14.08
13:58	4.25	0.421	12.6	4.39	17.39	392	14.11
Increased Pumping Rate to 200 mL/min							
14:01	4.26	0.412	11.4	4.12	17.78	399	14.04
14:04	4.25	0.442	5.39	4.09	17.88	403	14.04
Sampled @ 14:04							
14:14	4.50	0.406	2.39	6.39	17.04	354	14.04

Comments (weather conditions, color, type of sample, purge-water management, etc.):
1/14/08 - Temp: 45 °F; Dew Point: 41°F; Precip: 0.0 in; Pressure: 29.94 in Hg; Wind: 0 mph Max Wind Speed: 7 mph; Events: Rain

Signature: [signature] **Date:** 1/14/2008
QA/QC Sign Off: [signature] **Date:** 2/4/08

Golder Associates

DATE: *1/15/2008*

GROUNDWATER SAMPLING LOG

Project Name: *East Carolina LF*
Project No./Phase No.: *053-6620008.100*
Well ID: *GW-8*
Sampler(s): *K. Higgs / R. Stringfellow*
Well Diameter: *2* **inches**
Int. Depth to Water: *15.09* **feet**
Depth to Bottom: *18* **feet**
H_20 Column Thickness: *2.91* **feet**
Pumping Rate: *225* **mL/min.**
System Volume: *860* **mL**
Well Location: *Next to Maintanenc building, near road intersection*
Equipment: *Horiba WQM, QED MP-15 Micropurge Control and Power Pack, and WL indicator*

Time	pH (S.U.)	Cond. (mS/cm)	Turb. (NTU)	Dis O2 (mg/L)	Temp. (oC)	ORP (millivolts)	DTW (feet)
9:56	4.90	0.192	6.5	5.96	16.01	286	15.19
9:59	4.86	0.205	0.0	5.13	16.15	315	15.22
10:02	4.87	0.207	0.0	4.86	15.83	329	15.25
10:05	4.87	0.214	5.5	5.10	15.81	336	15.27
10:08	4.88	0.208	1.19	4.87	15.93	342	15.25
Sampled @ 10:08							
10:15	4.84	0.228	1.08	4.04	16.59	332	15.25

Comments (weather conditions, color, type of sample, purge-water management, etc.):
1/15/08 - Temp: 34 °F; Dew Point: 19°F; Precip: 0.0 in; Pressure: 30.04 in Hg; Wind: 0 mph Max Wind Speed: 10 mph; Events: none

Signature: [signature] **Date:** 1/15/2008
QA/QC Sign Off: [signature] **Date:** 2/4/08

Golder Associates

DATE: *1/15/2008*

GROUNDWATER SAMPLING LOG

Project Name: *East Carolina LF*
Project No./Phase No.: *053-6620008.100*
Well ID: *GW-9*
Sampler(s): *K. Higgs / R. Stringfellow*
Well Diameter: *2* **inches**
Int. Depth to Water: *5.49* **feet**
Depth to Bottom: *13* **feet**
H_20 Column Thickness: *7.51* **feet**
Pumping Rate: *300* **mL/min.**
System Volume: *760* **mL**
Well Location: *South of Maintenance building*
Equipment: *Horiba WQM, QED MP-15 Micropurge Control and Power Pack, and WL indicator*

Time	pH (S.U.)	Cond. (mS/cm)	Turb. (NTU)	Dis O2 (mg/L)	Temp. (oC)	ORP (millivolts)	DTW (feet)
9:18	5.50	0.130	>1000	4.79	15.39	198	5.86
9:20	5.47	0.144	495.0	3.53	15.01	180	5.84
9:22	5.46	0.136	293.0	3.36	15.01	177	5.81
9:24	5.43	0.128	305.0	2.66	15.23	170	5.81
9:26	5.43	0.130	165.0	2.64	15.38	168	5.81
9:28	5.42	0.128	37.5	2.56	15.44	166	5.81
Sampled @ 9:28							
9:37	5.40	0.150	18.6	2.27	15.32	169	5.82

Comments (weather conditions, color, type of sample, purge-water management, etc.):
1/15/08 - Temp: 34 °F; Dew Point: 19°F; Precip: 0.0 in; Pressure: 30.04 in Hg; Wind: 0 mph Max Wind Speed: 10 mph; Events: none

Signature: Ryan [illegible] **Date:** 1/15/2008
QA/QC Sign Off: [illegible] **Date:** 2/4/08

Golder Associates

DATE: *1/15/2008*

GROUNDWATER SAMPLING LOG

Project Name: *East Carolina LF*
Project No./Phase No.: *053-6620008.100*
Well ID: *GW-10*
Sampler(s): *K. Higgs / R. Stringfellow*
Well Diameter: *2* **inches**
Int. Depth to Water: *>20.54* **feet**
Depth to Bottom: *22* **feet**
H_20 Column Thickness: *--* **feet**
Pumping Rate: *225* **mL/min.**
System Volume: *940* **mL**
Well Location: *In woods behind sediment pond*
Equipment: *Horiba WQM, QED MP-15 Micropurge Control and Power Pack, and WL indicator*

Time	pH (S.U.)	Cond. (mS/cm)	Turb. (NTU)	Dis O2 (mg/L)	Temp. (oC)	ORP (millivolts)	DTW (feet)
8:32	5.82	0.234	207	3.60	14.47	150	BTOP
Reduced Pumping Rate to 150 mL/min							
8:36	5.85	0.381	76.4	3.82	14.06	145	BTOP
8:40	5.83	0.271	70.1	3.73	13.91	145	BTOP
8:44	5.79	0.270	61.5	3.52	14.16	146	BTOP
8:48	5.77	0.279	24.0	3.44	14.32	147	BTOP
Sampled @ 8:48							
8:56	5.75	0.170	12.1	3.75	13.57	151	BTOP

Comments (weather conditions, color, type of sample, purge-water management, etc.):
BTOP - Water level is Below the Top of the Pump
1/15/08 - Temp: 34 °F; Dew Point: 19°F; Precip: 0.0 in; Pressure: 30.04 in Hg; Wind: 0 mph Max Wind Speed: 10 mph; Events: none

Signature: [signature] **Date:** 2-22-08
QA/QC Sign Off: [signature] **Date:** 2-22-08

1/14/2008

Golder Associates

GROUNDWATER SAMPLING LOG

Project Name: *East Carolina LF* **Project No./Phase No.:** *053-6620008.100*
Well ID: *GW-11* **Sampler(s):** *K. Higgs / R. Stringfellow*
Well Diameter: *2* **inches** **Int. Depth to Water:** *24.88* **feet**
Depth to Bottom: *29.3* **feet** **H_20 Column Thickness:** *4.42* **feet**
Pumping Rate: *200* **mL/min.** **System Volume:** *1100* **mL**
Well Location: *Between Sed. Pond and tree line in SW area of landfill*
Equipment: *Horiba WQM, QED MP-15 Micropurge Control and Power Pack, and WL indicator*

Time	pH (S.U.)	Cond. (mS/cm)	Turb. (NTU)	Dis O2 (mg/L)	Temp. (oC)	ORP (millivolts)	DTW (feet)
15:45	5.26	0.144	0.0	7.44	17.22	318	25.38
15:48	5.31	0.150	0.0	4.84	16.82	313	25.32
15:51	5.29	0.141	0.0	4.20	16.61	314	25.32
15:54	5.29	0.137	0.0	3.93	16.55	314	25.32
15:57	5.26	0.111	0.0	3.86	16.67	318	25.32
16:00	5.27	0.112	0.0	3.91	16.68	317	25.32
16:03	5.27	0.120	1.29	3.96	16.65	317	25.32
Sampled @ 16:03							
16:10	5.05	0.148	1.32	4.71	17.06	325	25.82

Comments (weather conditions, color, type of sample, purge-water management, etc.):
1/14/08 - Temp: 45 °F; Dew Point: 41°F; Precip: 0.0 in; Pressure: 29.94 in Hg; Wind: 0 mph Max Wind Speed: 7 mph; Events: Rain

Signature: [signature] **Date:** 1/14/2008
QA/QC Sign Off: [signature] **Date:** 2/4/08

Golder Associates

DATE: *1/14/2008*

GROUNDWATER SAMPLING LOG

Project Name: *East Carolina LF*
Project No./Phase No.: *053-6620008.100*
Well ID: *GW-13*
Sampler(s): *K. Higgs / R. Stringfellow*
Well Diameter: *2* **inches**
Int. Depth to Water: *25.33* **feet**
Depth to Bottom: *41.6* **feet**
H_20 Column Thickness: *16.27* **feet**
Pumping Rate: *300* **mL/min.**
System Volume: *1340* **mL**
Well Location: *Along access road on western side of landfill*
Equipment: *Horiba WQM, QED MP-15 Micropurge Control and Power Pack, and WL indicator*

Time	pH (S.U.)	Cond. (mS/cm)	Turb. (NTU)	Dis O2 (mg/L)	Temp. (oC)	ORP (millivolts)	DTW (feet)
15:18	4.92	0.271	0.0	8.74	17.76	326	25.35
15:20	4.94	0.251	0.0	8.49	17.42	331	25.39
15:22	4.92	0.271	0.0	8.39	17.30	333	25.39
15:24	4.99	0.252	0.68	8.25	17.53	336	25.40
Sampled @ 15:24							
15:29	4.98	0.223	0.28	8.46	17.43	336	25.44

Comments (weather conditions, color, type of sample, purge-water management, etc.):
1/14/08 - Temp: 45 °F; Dew Point: 41°F; Precip: 0.0 in; Pressure: 29.94 in Hg; Wind: 0 mph Max Wind Speed: 7 mph; Events: Rain

Signature: [signature] **Date:** 1/14/2008
QA/QC Sign Off: [signature] **Date:** 2/4/08

Golder Associates

DATE: *1/14/2008*

GROUNDWATER SAMPLING LOG

Project Name: *East Carolina LF*
Project No./Phase No.: *053-6620008.100*
Well ID: *GW-14*
Sampler(s): *K. Higgs / R. Stringfellow*
Well Diameter: *2* **inches**
Int. Depth to Water: *28.81* **feet**
Depth to Bottom: *40* **feet**
H_20 Column Thickness: *11.19* **feet**
Pumping Rate: *250* **mL/min.**
System Volume: *1300* **mL**
Well Location: *Up the side of the landfill on NE corner*
Equipment: *Horiba WQM, QED MP-15 Micropurge Control and Power Pack, and WL indicator*

Time	pH (S.U.)	Cond. (mS/cm)	Turb. (NTU)	Dis O2 (mg/L)	Temp. (oC)	ORP (millivolts)	DTW (feet)
13:01	5.16	0.074	168.0	2.34	16.10	251	28.83
13:03	5.18	0.104	137.0	1.93	16.02	240	28.85
13:05	5.12	0.155	130.0	1.59	15.99	218	28.87
13:07	5.17	0.167	102.0	1.41	16.02	208	28.89
13:09	5.23	0.168	97.1	1.34	16.02	198	28.89
13:11	5.29	0.165	29.9	1.35	15.82	196	28.89
Sampled @ 13:11							
13:16	5.32	0.148	23.5	1.99	15.78	185	28.83

Comments (weather conditions, color, type of sample, purge-water management, etc.):
1/14/08 - Temp: 45 °F; Dew Point: 41°F; Precip: 0.0 in; Pressure: 29.94 in Hg; Wind: 0 mph Max Wind Speed: 7 mph; Events: Rain

Signature: [signature] **Date:** 1/14/2008
QA/QC Sign Off: [signature] **Date:** 2/4/08

Golder Associates

DATE: *1/14/2008*

GROUNDWATER SAMPLING LOG

Project Name: *East Carolina LF*
Project No./Phase No.: *053-6620008.100*
Well ID: *GW-15*
Sampler(s): *K. Higgs / R. Stringfellow*
Well Diameter: *2* **inches**
Int. Depth to Water: *28.48* **feet**
Depth to Bottom: *39.5* **feet**
H_20 Column Thickness: *11.02* **feet**
Pumping Rate: *200* **mL/min.**
System Volume: *1290* **mL**
Well Location: *NW corner of landfill next to access road*
Equipment: *Horiba WQM, QED MP-15 Micropurge Control and Power Pack, and WL indicator*

Time	pH (S.U.)	Cond. (mS/cm)	Turb. (NTU)	Dis O2 (mg/L)	Temp. (oC)	ORP (millivolts)	DTW (feet)
14:37	5.27	0.199	0.0	9.67	16.73	308	28.60
14:40	5.22	0.245	1.0	8.93	16.91	311	28.57
14:43	5.18	0.243	0.0	8.63	16.73	314	28.56
14:46	5.17	0.236	0.0	8.63	16.8	315	28.56
14:49	5.18	0.248	9.48	8.66	16.65	317	28.56
Sampled @ 14:49							
14:55	5.24	0.235	3.13	8.66	15.99	303	28.56

Comments (weather conditions, color, type of sample, purge-water management, etc.):
1/14/08 - Temp: 45 °F; Dew Point: 41°F; Precip: 0.0 in; Pressure: 29.94 in Hg; Wind: 0 mph Max Wind Speed: 7 mph; Events: Rain

Signature: *[signature]* **Date:** *1/14/2008*
QA/QC Sign Off: *[signature]* **Date:** *1/14/08*

Golder Associates

DATE: *1/14/2008*

GROUNDWATER SAMPLING LOG

Project Name: *East Carolina LF*
Project No./Phase No.: *053-6620008.100*
Well ID: *GW-16R*
Sampler(s): *K. Higgs / R. Stringfellow*
Well Diameter: *2* **inches**
Int. Depth to Water: *18.89* **feet**
Depth to Bottom: *27.2* **feet**
H_20 Column Thickness: *8.31* **feet**
Pumping Rate: *225* **mL/min.**
System Volume: *1040* **mL**
Well Location: *NE corner of new cell at north end of landfill*
Equipment: *Horiba WQM, QED MP-15 Micropurge Control and Power Pack, and WL indicator*

Time	pH (S.U.)	Cond. (mS/cm)	Turb. (NTU)	Dis O2 (mg/L)	Temp. (oC)	ORP (millivolts)	DTW (feet)
10:40	5.11	0.061	34.6	6.58	16.27	303	18.91
10:43	5.01	0.054	41.9	6.33	16.52	312	18.93
10:46	5.15	0.053	14.8	6.40	16.43	314	18.95
10:49	5.08	0.053	4.08	6.37	16.64	308	18.95
Sampled @ 10:49							
10:56	5.06	0.052	3.27	6.05	15.70	321	18.88

Comments (weather conditions, color, type of sample, purge-water management, etc.):
1/14/08 - Temp: 45 ° F; Dew Point: 41°F; Precip: 0.0 in; Pressure: 29.94 in Hg; Wind: 0 mph Max Wind Speed: 7 mph; Events: Rain

Signature: [signature] **Date:** 1/14/2008
QA/QC Sign Off: [signature] **Date:** 2/4/08

DATE: *1/15/2008*

Golder Associates

PUMP HOUSE WATER SAMPLING LOG

Project Name: *East Carolina LF* **Project No./Phase No.:** *053-6620008.100*
Sample ID: *PW-1* **Sampler(s):** *K. Higgs / R. Stringfellow*
Sampling Location: *Pump House spigot near entrance road*
Equipment: *Horiba U-22 water quality meter*

Time	12:50
pH s.u.	7.36
Cond. mS/cm	0.629
Turb. ntu	69.1
Dis. O2 mg/L	--
Temp. oC	14.12
TDS Sal	--
ORP mv	--

Surface Water Sampling Location Sketch

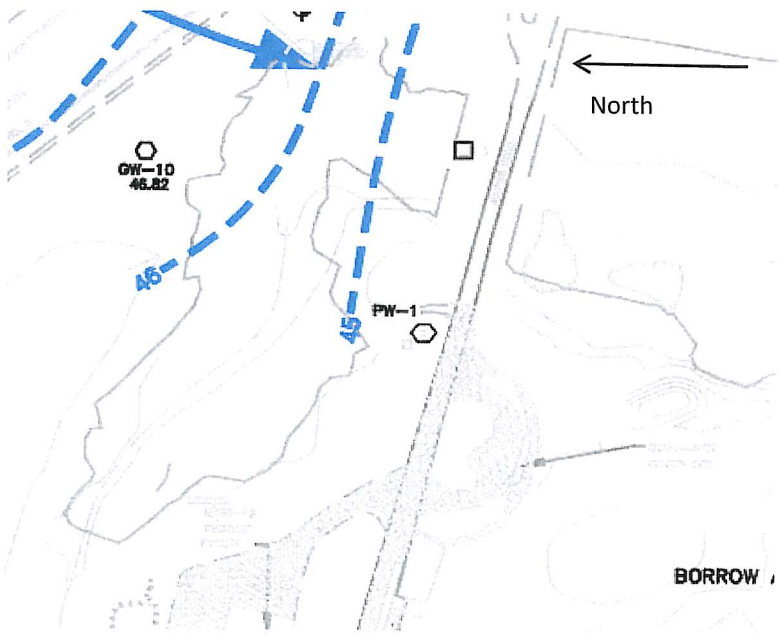

Comments (sample methodology, weather conditions, color, silt, etc.):
1/15/08 - Temp: 34 °F; Dew Point: 19°F; Precip: 0.0 in; Pressure: 30.04 in Hg; Wind: 0 mph
Max Wind Speed: 10 mph; Events: none

Parameters taken after sample

Signature: Date: 2-22-08
QA/QC Sign Off: Date: 2-22-08

DATE: *1/15/2008*

Golder Associates

SURFACE WATER SAMPLING LOG

Project Name: *East Carolina LF* **Project No./Phase No.:** *053-6620008.100*
Sample ID: *SW-1* **Sampler(s):** *K. Higgs / R. Stringfellow*
Sampling Location: *Drainage off the side of Republican Road.*
Equipment: *Horiba U-22 water quality meter*

Time	12:24
pH s.u.	5.63
Cond. mS/cm	0.108
Turb. ntu	177.0
Dis. O2 mg/L	11.27
Temp. oC	4.82
TDS Sal	--
ORP mv	186

Surface Water Sampling Location Sketch

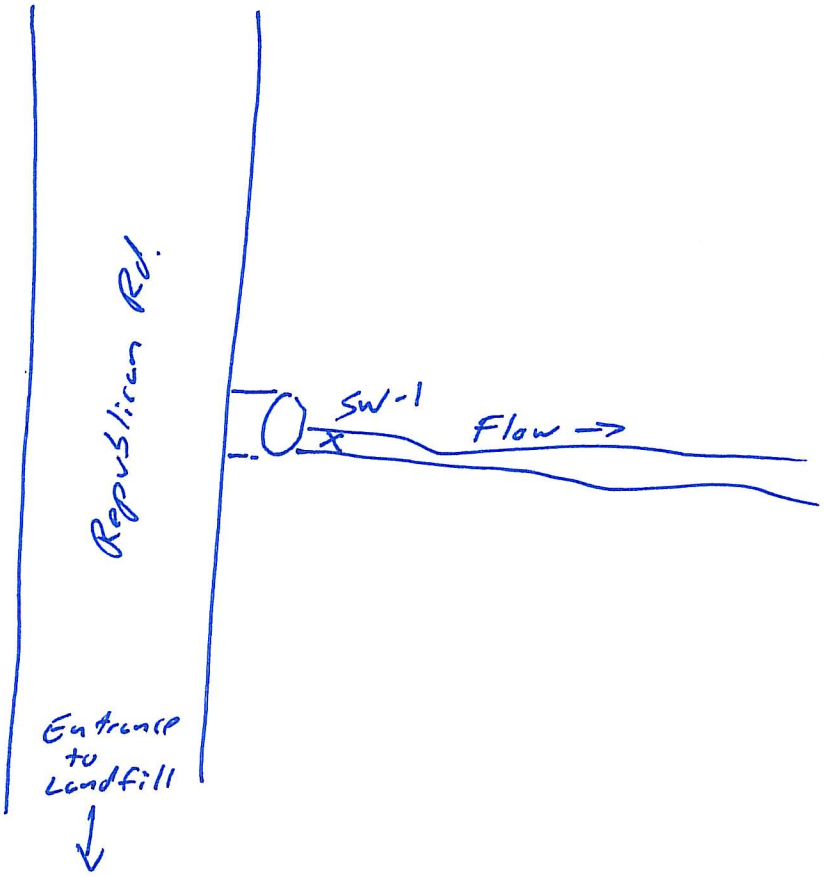

Comments (sample methodology, weather conditions, color, silt, etc.):
1/15/08 - Temp: 34 °F; Dew Point: 19°F; Precip: 0.0 in; Pressure: 30.04 in Hg; Wind: 0 mph
Max Wind Speed: 10 mph; Events: none
Parameters taken after sample

Signature: Date: 2-22-08
QA/QC Sign Off: Date: 2-22-08

DATE: *1/15/2008*

Golder Associates

SURFACE WATER SAMPLING LOG

Project Name: *East Carolina LF* **Project No./Phase No.:** *053-6620008.100*
Sample ID: *SW-2* **Sampler(s):** *K. Higgs / R. Stringfellow*
Sampling Location: *Back in the woods behind leachate tanks, follow flagging.*
Equipment: *Horiba U-22 water quality meter*

Time	12:00
pH s.u.	5.42
Cond. mS/cm	0.353
Turb. ntu	182.0
Dis. O2 mg/L	5.95
Temp. oC	10.05
TDS Sal	--
ORP mv	163

Surface Water Sampling Location Sketch

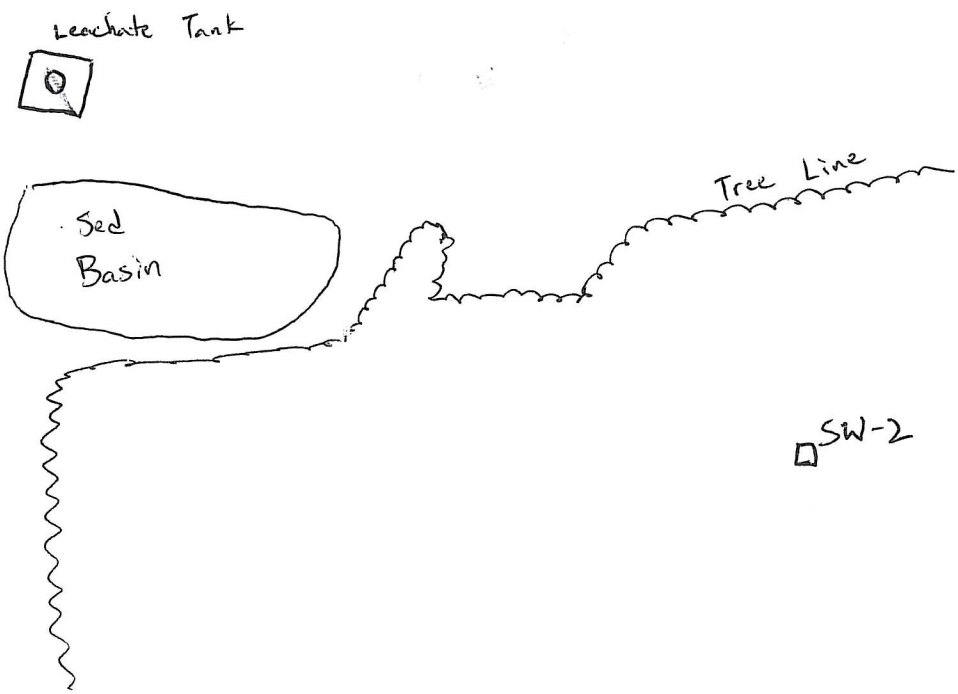

Comments (sample methodology, weather conditions, color, silt, etc.):
1/15/08 - Temp: 34 °F; Dew Point: 19°F; Precip: 0.0 in; Pressure: 30.04 in Hg; Wind: 0 mph
Max Wind Speed: 10 mph; Events: none

Parameters taken after sample

Signature: Date: 1/15/2008
QA/QC Sign Off: Date: 2/4/08

DATE: *1/15/2008*

Golder Associates

SURFACE WATER SAMPLING LOG

Project Name: *East Carolina LF* **Project No./Phase No.:** *053-6620008.100*
Sample ID: *SW-3* **Sampler(s):** *K. Higgs / R. Stringfellow*
Sampling Location: *At end of dirt road between borrow areas.*
Equipment: *Horiba U-22 water quality meter*

Time	11:15
pH s.u.	--
Cond. mS/cm	--
Turb. ntu	--
Dis. O2 mg/L	--
Temp. oC	--
TDS Sal	--
ORP mv	--

Comments (sample methodology, weather conditions, color, silt, etc.):
1/15/08 - Temp: 34 °F; Dew Point: 19°F; Precip: 0.0 in; Pressure: 30.04 in Hg; Wind: 0 mph
Max Wind Speed: 10 mph; Events: none
DRY - No Sample

Signature: Date: 2-22-08
QA/QC Sign Off: Date: 2-22-08

DATE: *1/15/2008*

Golder Associates

SURFACE WATER SAMPLING LOG

Project Name: *East Carolina LF* **Project No./Phase No.:** *053-6620008.100*
Sample ID: *SW-4* **Sampler(s):** *K. Higgs / R. Stringfellow*
Sampling Location: *Left down dirt road next to borrow area #1.*
Equipment: *Horiba U-22 water quality meter*

Time	11:30
pH s.u.	5.56
Cond. mS/cm	0.065
Turb. ntu	205.0
Dis. O2 mg/L	13.53
Temp. oC	6.12
TDS Sal	--
ORP mv	218

Surface Water Sampling Location Sketch

Comments (sample methodology, weather conditions, color, silt, etc.):
1/15/08 - Temp: 34 °F; Dew Point: 19°F; Precip: 0.0 in; Pressure: 30.04 in Hg; Wind: 0 mph
Max Wind Speed: 10 mph; Events: none

Parameters taken after sample

Signature: Date: 1/15/2008
QA/QC Sign Off: Date: 2/4/08

DATE: *1/15/2008*

Golder Associates

LEACHATE SAMPLING LOG

Project Name: *East Carolina LF* **Project No./Phase No.:** *053-6620008.100*
Sample ID: *Leachate* **Sampler(s):** *K. Higgs / R. Stringfellow*
Sampling Location: *Large valve used to pump into trucks*
Equipment: *Horiba U-22 water quality meter*

Time	13:20
pH s.u.	7.53
Cond. mS/cm	13.1
Turb. ntu	800.7
Dis. O2 mg/L	--
Temp. oC	9.95
TDS Sal	--
ORP mv	--

Leachate Sampling Location Sketch

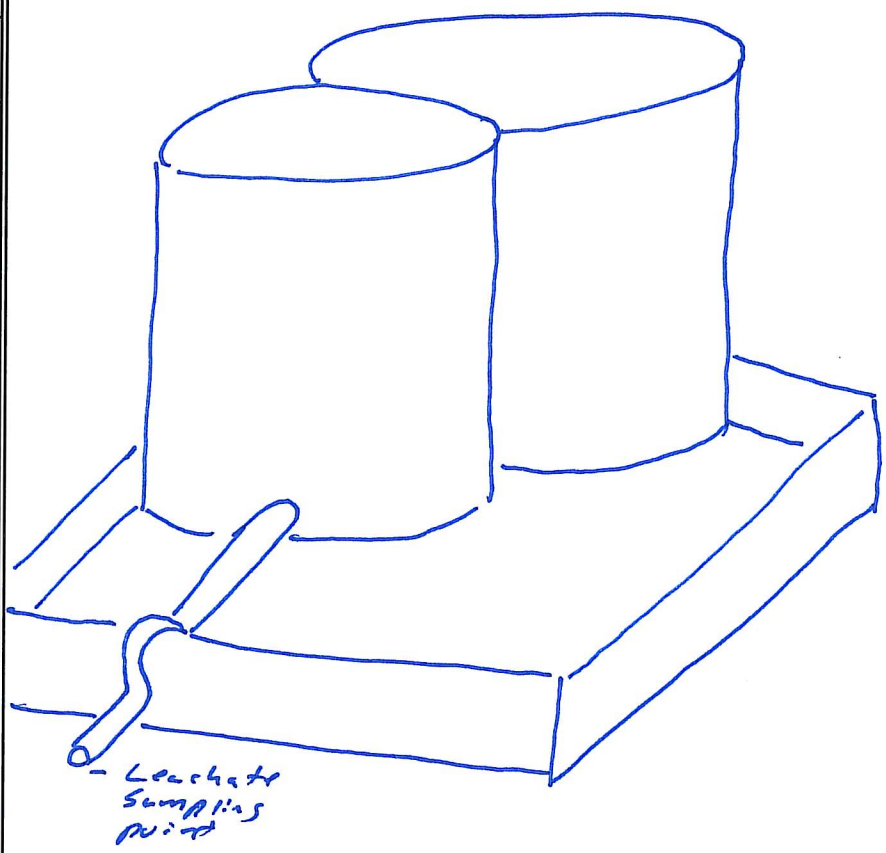

Comments (sample methodology, weather conditions, color, silt, etc.):
1/15/08 - Temp: 34 °F; Dew Point: 19°F; Precip: 0.0 in; Pressure: 30.04 in Hg; Wind: 0 mph
Max Wind Speed: 10 mph; Events: none

Parameters taken after sample

Signature: Date: 2-22-08
QA/QC Sign Off: Date: 2-22-08

Golder Associates

WELL CONDITION SUMMARY

DATE: Jan 14-15, 2008

Project Name: East Carolina LDF

Personnel: R. Stringfellow / K. Higgs

Project No./Task No. 053-6620008.100

Page 1 of 2

Well ID	Protective Casing	Well Casing	Label	Lock	Pad Condition	Depth of Well (Feet)	General Turbidity	Comments/ Observations*
GW-2	☒ OK ☐ Damaged	☒ OK ☐ Damaged	☒ OK ☐ Inadequate	☒ Yes ☐ No	☒ OK ☐ Damaged	30	☒ Clear ☐ Turbid	
GW-7	☒ OK ☐ Damaged	☒ OK ☐ Damaged	☒ OK ☐ Inadequate	☒ Yes ☐ No	☒ OK ☐ Damaged	18	☒ Clear ☐ Turbid	
GW-8	☒ OK ☐ Damaged	☒ OK ☐ Damaged	☒ OK ☐ Inadequate	☒ Yes ☐ No	☒ OK ☐ Damaged	18	☒ Clear ☐ Turbid	
GW-9	☒ OK ☐ Damaged	☒ OK ☐ Damaged	☒ OK ☐ Inadequate	☒ Yes ☐ No	☒ OK ☐ Damaged	13	☒ Clear ☐ Turbid	
GW-10	☒ OK ☐ Damaged	☒ OK ☐ Damaged	☒ OK ☐ Inadequate	☒ Yes ☐ No	☒ OK ☐ Damaged	20	☒ Clear ☐ Turbid	
GW-11	☒ OK ☐ Damaged	☒ OK ☐ Damaged	☒ OK ☐ Inadequate	☒ Yes ☐ No	☒ OK ☐ Damaged	29.5	☒ Clear ☐ Turbid	
GW-13	☒ OK ☐ Damaged	☒ OK ☐ Damaged	☒ OK ☐ Inadequate	☒ Yes ☐ No	☒ OK ☐ Damaged	41.5	☒ Clear ☐ Turbid	
GW-14	☒ OK ☐ Damaged	☒ OK ☐ Damaged	☒ OK ☐ Inadequate	☒ Yes ☐ No	☒ OK ☐ Damaged	40	☒ Clear ☐ Turbid	
GW-15	☒ OK ☐ Damaged	☒ OK ☐ Damaged	☒ OK ☐ Inadequate	☒ Yes ☐ No	☒ OK ☐ Damaged	40	☒ Clear ☐ Turbid	
GW-16R	☒ OK ☐ Damaged	☒ OK ☐ Damaged	☒ OK ☐ Inadequate	☒ Yes ☐ No	☒ OK ☐ Damaged	27	☒ Clear ☐ Turbid	
GW-1	☒ OK ☒ Damaged	☒ OK ☐ Damaged	☒ OK ☐ Inadequate	☒ Yes ☐ No	☒ OK ☐ Damaged	18.5	☐ Clear ☐ Turbid	Did not measure turbidity
GW-3	☒ OK ☐ Damaged	☒ OK ☐ Damaged	☒ OK ☐ Inadequate	☒ Yes ☐ No	☒ OK ☐ Damaged	19.5	☐ Clear ☐ Turbid	↓

* Note ponding water, weep holes, condition of surrounding area, including any disturbance of the ground since last inspection, evidence of contamination.

Signature: [signature] Date: 02/04/08

Golder Associates

WELL CONDITION SUMMARY

DATE: Jan 14-15, 2008

Project Name: East Carolina LDF

Project No./Task No. 053-6620008.100

Personnel: R. Stringfellow / K. Higgs

Page 2 of 2

Well ID	Protective Casing	Well Casing	Label	Lock	Pad Condition	Depth of Well (Feet)	General Turbudity	Comments/ Observations*
GW-4	☒ OK ☐ Damaged	☒ OK ☐ Damaged	☒ OK ☐ Inadequate	☒ Yes ☐ No	☒ OK ☐ Damaged	17.5	☐ Clear ☐ Turbid	Did not measure turbidity
GW-5	☒ OK ☐ Damaged	☒ OK ☐ Damaged	☒ OK ☐ Inadequate	☒ Yes ☐ No	☒ OK ☐ Damaged	17	☐ Clear ☐ Turbid	↓
GW-6	☒ OK ☐ Damaged	☒ OK ☐ Damaged	☒ OK ☐ Inadequate	☒ Yes ☐ No	☒ OK ☐ Damaged	13.5	☐ Clear ☐ Turbid	↓
GW-12	☒ OK ☐ Damaged	☒ OK ☐ Damaged	☒ OK ☐ Inadequate	☒ Yes ☐ No	☒ OK ☐ Damaged	21	☐ Clear ☐ Turbid	↓
	☐ OK ☐ Damaged	☐ OK ☐ Damaged	☐ OK ☐ Inadequate	☐ Yes ☐ No	☐ OK ☐ Damaged		☐ Clear ☐ Turbid	
	☐ OK ☐ Damaged	☐ OK ☐ Damaged	☐ OK ☐ Inadequate	☐ Yes ☐ No	☐ OK ☐ Damaged		☐ Clear ☐ Turbid	
	☐ OK ☐ Damaged	☐ OK ☐ Damaged	☐ OK ☐ Inadequate	☐ Yes ☐ No	☐ OK ☐ Damaged		☐ Clear ☐ Turbid	
	☐ OK ☐ Damaged	☐ OK ☐ Damaged	☐ OK ☐ Inadequate	☐ Yes ☐ No	☐ OK ☐ Damaged		☐ Clear ☐ Turbid	
	☐ OK ☐ Damaged	☐ OK ☐ Damaged	☐ OK ☐ Inadequate	☐ Yes ☐ No	☐ OK ☐ Damaged		☐ Clear ☐ Turbid	
	☐ OK ☐ Damaged	☐ OK ☐ Damaged	☐ OK ☐ Inadequate	☐ Yes ☐ No	☐ OK ☐ Damaged		☐ Clear ☐ Turbid	
	☐ OK ☐ Damaged	☐ OK ☐ Damaged	☐ OK ☐ Inadequate	☐ Yes ☐ No	☐ OK ☐ Damaged		☐ Clear ☐ Turbid	
	☐ OK ☐ Damaged	☐ OK ☐ Damaged	☐ OK ☐ Inadequate	☐ Yes ☐ No	☐ OK ☐ Damaged		☐ Clear ☐ Turbid	

* Note ponding water, weep holes, condition of surrounding area, including any disturbance of the ground since last inspection, evidence of contamination.

Signature: [illegible] Date: 02/04/08

APPENDIX II

JANUARY 2008 CERTIFICATES-OF-ANALYSIS, CHAIN-OF-CUSTODY FORMS AND LABORATORY DATA REVIEWS

Environmental Conservation Laboratories, Inc.
102-A Woodwinds Industrial Court
Cary NC, 27511
Phone: 919.467.3090 FAX: 919.467.3515
www.encolabs.com

Friday, January 25, 2008

Golder Associates, Inc. (GO007)

Attn: Dusty Reedy

The Wingate Building 4900 Koger Blvd., Suite 140

Greensboro, NC 27407

RE: Laboratory Results for
Project Number: 053-6620008.100, Project Name/Desc: Republic-East Carolina Landfill
ENCO Workorder: C717605

Dear Dusty Reedy,

Enclosed is a copy of your laboratory report for test samples received by our laboratory on Tuesday, January 15, 2008.

Unless otherwise noted in an attached project narrative, all samples were received in acceptable condition and processed in accordance with the referenced methods/procedures. Results for these procedures apply only to the samples as submitted.

The analytical results contained in this report are in compliance with NELAC standards, except as noted in the project narrative. This report shall not be reproduced except in full, without the written approval of the Laboratory.

This report contains only those analyses performed by Environmental Conservation Laboratories. Unless otherwise noted, all analyses were performed at ENCO Cary. Data from outside organizations will be reported under separate cover.

If you have any questions or require further information, please do not hesitate to contact me.

Sincerely,

Stephanie Franz

Project Manager

Enclosure(s)

The total number of pages in this report, including this page is 56.

PROJECT NARRATIVE

Date: 25 January 2008
Client: Golder Associates
Project: Republic- East Carolina Landfill
Lab ID: C717605

Overview

All samples submitted were analyzed by Environmental Conservation Laboratories, Inc. in accordance with the methods referenced in the laboratory report. Any particular difficulties encountered during sample handling by Environmental Conservation Laboratories, Inc. will be discussed in the QC Remarks section below.

Quality Control Samples

The Method Blank for the 6010B analysis had low-level detections (less than half of the MRL) of Copper and Vanadium. The associated samples with detections of these analytes have concentrations less than ten times that of the Method Blank, indicating a possible high bias. However, the concentrations detected in the samples are less than the MRL and NC SWS Limit.

Quality Control Remarks

No comments

Other Comments

All samples associated with this work order arrived in acceptable conditions. The samples were not checked for residual chlorine, as it is not a requirement.

The analytical data presented in this report are consistent with the methods as referenced in the analytical report. Any exceptions or deviations are noted in the QC remarks section of this narrative.

Released By:
Environmental Conservation Laboratories, Inc.

Stephanie Franz
Project Manager

www.encolabs.com

SAMPLE SUMMARY/LABORATORY CHRONICLE

Client ID: 0803-GW2 **Lab ID:** C717605-01 **Sampled:** 01/14/08 11:44 **Received:** 01/15/08 17:20

Parameter	Hold Date/Time(s)	Prep Date/Time(s)	Analysis Date/Time(s)
EPA 6010B	07/12/08	01/17/08 06:26	1/24/2008 10:53
EPA 6020	07/12/08	01/17/08 06:39	1/18/2008 10:40
EPA 8260B	01/28/08	01/15/08 12:52	1/16/2008 16:27

Client ID: 0803-GW7 (MS/MSD) **Lab ID:** C717605-02 **Sampled:** 01/14/08 14:04 **Received:** 01/15/08 17:20

Parameter	Hold Date/Time(s)	Prep Date/Time(s)	Analysis Date/Time(s)
EPA 6010B	07/12/08	01/17/08 06:26	1/24/2008 10:29
EPA 6020	07/12/08	01/17/08 06:39	1/18/2008 10:31
EPA 8260B	01/28/08	01/15/08 12:52	1/16/2008 14:30

Client ID: 0803-GW8 **Lab ID:** C717605-03 **Sampled:** 01/15/08 10:08 **Received:** 01/15/08 17:20

Parameter	Hold Date/Time(s)	Prep Date/Time(s)	Analysis Date/Time(s)
EPA 6010B	07/13/08	01/17/08 06:26	1/24/2008 11:00
EPA 6020	07/13/08	01/17/08 06:39	1/18/2008 10:42
EPA 8260B	01/29/08	01/15/08 12:52	1/16/2008 16:56

Client ID: 0803-GW9 **Lab ID:** C717605-04 **Sampled:** 01/15/08 09:28 **Received:** 01/15/08 17:20

Parameter	Hold Date/Time(s)	Prep Date/Time(s)	Analysis Date/Time(s)
EPA 6010B	07/13/08	01/17/08 06:26	1/24/2008 11:07
EPA 6020	07/13/08	01/17/08 06:39	1/18/2008 10:45
EPA 8260B	01/29/08	01/15/08 12:52	1/16/2008 17:25

Client ID: 0803-GW10 **Lab ID:** C717605-05 **Sampled:** 01/15/08 08:30 **Received:** 01/15/08 17:20

Parameter	Hold Date/Time(s)	Prep Date/Time(s)	Analysis Date/Time(s)
EPA 6010B	07/13/08	01/17/08 06:26	1/24/2008 11:14
EPA 6020	07/13/08	01/17/08 06:39	1/18/2008 10:48
EPA 8260B	01/29/08	01/15/08 12:52	1/16/2008 17:54

Client ID: 0803-GW11 **Lab ID:** C717605-06 **Sampled:** 01/14/08 16:03 **Received:** 01/15/08 17:20

Parameter	Hold Date/Time(s)	Prep Date/Time(s)	Analysis Date/Time(s)
EPA 6010B	07/12/08	01/17/08 06:26	1/24/2008 11:21
EPA 6020	07/12/08	01/17/08 06:39	1/18/2008 10:51
EPA 8260B	01/28/08	01/15/08 12:52	1/16/2008 18:23

www.encolabs.com

Client ID: 0803-GW13	Lab ID: C717605-07	Sampled: 01/14/08 15:24	Received: 01/15/08 17:20

Parameter	Hold Date/Time(s)	Prep Date/Time(s)	Analysis Date/Time(s)
EPA 6010B	07/12/08	01/17/08 06:26	1/24/2008 11:46
EPA 6020	07/12/08	01/17/08 06:39	1/18/2008 10:59
EPA 8260B	01/28/08	01/15/08 12:52	1/16/2008 18:53

Client ID: 0803-GW14	Lab ID: C717605-08	Sampled: 01/14/08 13:11	Received: 01/15/08 17:20

Parameter	Hold Date/Time(s)	Prep Date/Time(s)	Analysis Date/Time(s)
EPA 6010B	07/12/08	01/17/08 06:26	1/24/2008 11:53
EPA 6020	07/12/08	01/17/08 06:39	1/18/2008 11:02
EPA 8260B	01/28/08	01/15/08 12:52	1/16/2008 19:22

Client ID: 0803-GW15	Lab ID: C717605-09	Sampled: 01/14/08 14:49	Received: 01/15/08 17:20

Parameter	Hold Date/Time(s)	Prep Date/Time(s)	Analysis Date/Time(s)
EPA 6010B	07/12/08	01/17/08 06:26	1/24/2008 12:00
EPA 6020	07/12/08	01/17/08 06:39	1/18/2008 11:05
EPA 8260B	01/28/08	01/16/08 12:55	1/17/2008 04:06

Client ID: 0803-GW16R	Lab ID: C717605-10	Sampled: 01/15/08 10:49	Received: 01/15/08 17:20

Parameter	Hold Date/Time(s)	Prep Date/Time(s)	Analysis Date/Time(s)
EPA 6010B	07/13/08	01/17/08 06:26	1/24/2008 12:07
EPA 6020	07/13/08	01/17/08 06:39	1/18/2008 11:08
EPA 8260B	01/29/08	01/16/08 12:55	1/17/2008 04:35

Client ID: 0803-PW1	Lab ID: C717605-11	Sampled: 01/15/08 12:50	Received: 01/15/08 17:20

Parameter	Hold Date/Time(s)	Prep Date/Time(s)	Analysis Date/Time(s)
EPA 6010B	07/13/08	01/17/08 06:26	1/24/2008 12:14
EPA 6020	07/13/08	01/17/08 06:39	1/18/2008 11:10
EPA 8260B	01/29/08	01/16/08 12:55	1/17/2008 05:05

Client ID: 0803-Field Blank	Lab ID: C717605-12	Sampled: 01/15/08 14:00	Received: 01/15/08 17:20

Parameter	Hold Date/Time(s)	Prep Date/Time(s)	Analysis Date/Time(s)
EPA 6010B	07/13/08	01/17/08 06:26	1/24/2008 12:21
EPA 6020	07/13/08	01/17/08 06:39	1/18/2008 11:23
EPA 8260B	01/29/08	01/16/08 12:55	1/17/2008 05:34

Client ID: 0803-Trip Blank	Lab ID: C717605-13	Sampled: 01/14/08 00:00	Received: 01/15/08 17:20

Parameter	Hold Date/Time(s)	Prep Date/Time(s)	Analysis Date/Time(s)
EPA 8260B	01/28/08	01/18/08 10:57	1/18/2008 15:15

www.encolabs.com

NORTH CAROLINA SWS SAMPLE DETECTION SUMMARY

Client ID: 0803-GW2 **Lab ID:** C717605-01

Analyte	Results	Flag	DF	MDL	MRL	NC SWSL	Units	Method	Notes
Barium	405		1	0.20	10.0	100	ug/L	EPA 6010B	
Chromium	2.6	J	1	2.0	10.0	10	ug/L	EPA 6010B	
Cobalt	11.3		1	2.0	10.0	10	ug/L	EPA 6010B	
Copper	4.70	J	1	0.60	10.0	10	ug/L	EPA 6010B	
Nickel	11.0	J	1	2.0	10.0	50	ug/L	EPA 6010B	
Selenium	2.3	J	1	2.0	10.0	10	ug/L	EPA 6010B	
Silver	2.1	J	1	2.0	10.0	10	ug/L	EPA 6010B	
Thallium	0.077	J	1	0.036	1.00	5.5	ug/L	EPA 6020	
Vanadium	1.6	J	1	1.0	10.0	25	ug/L	EPA 6010B	
Zinc	13.3		1	1.0	10.0	10	ug/L	EPA 6010B	

Client ID: 0803-GW7 (MS/MSD) **Lab ID:** C717605-02

Analyte	Results	Flag	DF	MDL	MRL	NC SWSL	Units	Method	Notes
Barium	129		1	0.20	10.0	100	ug/L	EPA 6010B	
Beryllium	1.50		1	0.70	1.00	1	ug/L	EPA 6010B	
Cobalt	35.1		1	2.0	10.0	10	ug/L	EPA 6010B	
Copper	1.60	J	1	0.60	10.0	10	ug/L	EPA 6010B	
Nickel	8.0	J	1	2.0	10.0	50	ug/L	EPA 6010B	
Thallium	0.069	J	1	0.036	1.00	5.5	ug/L	EPA 6020	
Zinc	5.7	J	1	1.0	10.0	10	ug/L	EPA 6010B	

Client ID: 0803-GW8 **Lab ID:** C717605-03

Analyte	Results	Flag	DF	MDL	MRL	NC SWSL	Units	Method	Notes
Arsenic	2.1	J	1	2.0	10.0	10	ug/L	EPA 6010B	
Barium	127		1	0.20	10.0	100	ug/L	EPA 6010B	
Cobalt	4.2	J	1	2.0	10.0	10	ug/L	EPA 6010B	
Copper	1.30	J	1	0.60	10.0	10	ug/L	EPA 6010B	
Nickel	5.8	J	1	2.0	10.0	50	ug/L	EPA 6010B	
Selenium	2.0	J	1	2.0	10.0	10	ug/L	EPA 6010B	
Vanadium	1.1	J	1	1.0	10.0	25	ug/L	EPA 6010B	
Zinc	4.1	J	1	1.0	10.0	10	ug/L	EPA 6010B	

Client ID: 0803-GW9 **Lab ID:** C717605-04

Analyte	Results	Flag	DF	MDL	MRL	NC SWSL	Units	Method	Notes
Arsenic	2.7	J	1	2.0	10.0	10	ug/L	EPA 6010B	
Barium	59.0	J	1	0.20	10.0	100	ug/L	EPA 6010B	
Cobalt	3.2	J	1	2.0	10.0	10	ug/L	EPA 6010B	
Copper	1.30	J	1	0.60	10.0	10	ug/L	EPA 6010B	
Nickel	3.7	J	1	2.0	10.0	50	ug/L	EPA 6010B	
Silver	3.1	J	1	2.0	10.0	10	ug/L	EPA 6010B	
Vanadium	2.7	J	1	1.0	10.0	25	ug/L	EPA 6010B	
Zinc	6.0	J	1	1.0	10.0	10	ug/L	EPA 6010B	

Client ID: 0803-GW10 **Lab ID:** C717605-05

Analyte	Results	Flag	DF	MDL	MRL	NC SWSL	Units	Method	Notes
Barium	94.6	J	1	0.20	10.0	100	ug/L	EPA 6010B	
Cobalt	3.8	J	1	2.0	10.0	10	ug/L	EPA 6010B	
Nickel	2.0	J	1	2.0	10.0	50	ug/L	EPA 6010B	

www.encolabs.com

Client ID: 0803-GW10						Lab ID: C717605-05			
Analyte	**Results**	**Flag**	**DF**	**MDL**	**MRL**	**NC SWSL**	**Units**	**Method**	**Notes**
Zinc	2.9	J	1	1.0	10.0	10	ug/L	EPA 6010B	

Client ID: 0803-GW11						Lab ID: C717605-06			
Analyte	**Results**	**Flag**	**DF**	**MDL**	**MRL**	**NC SWSL**	**Units**	**Method**	**Notes**
Arsenic	2.3	J	1	2.0	10.0	10	ug/L	EPA 6010B	
Barium	18.5	J	1	0.20	10.0	100	ug/L	EPA 6010B	
Chloroform	0.62	J	1	0.16	1.0	5	ug/L	EPA 8260B	
Chromium	5.9	J	1	2.0	10.0	10	ug/L	EPA 6010B	
Cobalt	2.0	J	1	2.0	10.0	10	ug/L	EPA 6010B	
Copper	1.00	J	1	0.60	10.0	10	ug/L	EPA 6010B	
Nickel	3.2	J	1	2.0	10.0	50	ug/L	EPA 6010B	
Vanadium	2.0	J	1	1.0	10.0	25	ug/L	EPA 6010B	
Zinc	5.2	J	1	1.0	10.0	10	ug/L	EPA 6010B	

Client ID: 0803-GW13						Lab ID: C717605-07			
Analyte	**Results**	**Flag**	**DF**	**MDL**	**MRL**	**NC SWSL**	**Units**	**Method**	**Notes**
Barium	291		1	0.20	10.0	100	ug/L	EPA 6010B	
Chromium	3.8	J	1	2.0	10.0	10	ug/L	EPA 6010B	
Cobalt	3.3	J	1	2.0	10.0	10	ug/L	EPA 6010B	
Copper	0.80	J	1	0.60	10.0	10	ug/L	EPA 6010B	
Nickel	4.7	J	1	2.0	10.0	50	ug/L	EPA 6010B	
Thallium	0.063	J	1	0.036	1.00	5.5	ug/L	EPA 6020	
Zinc	4.8	J	1	1.0	10.0	10	ug/L	EPA 6010B	

Client ID: 0803-GW14						Lab ID: C717605-08			
Analyte	**Results**	**Flag**	**DF**	**MDL**	**MRL**	**NC SWSL**	**Units**	**Method**	**Notes**
Barium	37.1	J	1	0.20	10.0	100	ug/L	EPA 6010B	
Cobalt	5.7	J	1	2.0	10.0	10	ug/L	EPA 6010B	
Nickel	3.6	J	1	2.0	10.0	50	ug/L	EPA 6010B	
Vanadium	1.2	J	1	1.0	10.0	25	ug/L	EPA 6010B	
Zinc	5.9	J	1	1.0	10.0	10	ug/L	EPA 6010B	

Client ID: 0803-GW15						Lab ID: C717605-09			
Analyte	**Results**	**Flag**	**DF**	**MDL**	**MRL**	**NC SWSL**	**Units**	**Method**	**Notes**
Barium	117		1	0.20	10.0	100	ug/L	EPA 6010B	
Cobalt	3.4	J	1	2.0	10.0	10	ug/L	EPA 6010B	
Copper	0.80	J	1	0.60	10.0	10	ug/L	EPA 6010B	
Nickel	3.8	J	1	2.0	10.0	50	ug/L	EPA 6010B	
Selenium	2.3	J	1	2.0	10.0	10	ug/L	EPA 6010B	
Silver	2.1	J	1	2.0	10.0	10	ug/L	EPA 6010B	
Vanadium	1.0	J	1	1.0	10.0	25	ug/L	EPA 6010B	
Zinc	3.7	J	1	1.0	10.0	10	ug/L	EPA 6010B	

Client ID: 0803-GW16R						Lab ID: C717605-10			
Analyte	**Results**	**Flag**	**DF**	**MDL**	**MRL**	**NC SWSL**	**Units**	**Method**	**Notes**
Barium	38.0	J	1	0.20	10.0	100	ug/L	EPA 6010B	
Chloroform	0.54	J	1	0.16	1.0	5	ug/L	EPA 8260B	
Cobalt	2.6	J	1	2.0	10.0	10	ug/L	EPA 6010B	
Copper	1.10	J	1	0.60	10.0	10	ug/L	EPA 6010B	
Zinc	13.6		1	1.0	10.0	10	ug/L	EPA 6010B	

www.encolabs.com

Client ID:	0803-PW1				Lab ID:	C717605-11			
Analyte	**Results**	**Flag**	**DF**	**MDL**	**MRL**	**NC SWSL**	**Units**	**Method**	**Notes**
Barium	66.5	J	1	0.20	10.0	100	ug/L	EPA 6010B	
Copper	2.20	J	1	0.60	10.0	10	ug/L	EPA 6010B	
Zinc	81.5		1	1.0	10.0	10	ug/L	EPA 6010B	

Client ID:	0803-Field Blank				Lab ID:	C717605-12			
Analyte	**Results**	**Flag**	**DF**	**MDL**	**MRL**	**NC SWSL**	**Units**	**Method**	**Notes**
Barium	0.30	J	1	0.20	10.0	100	ug/L	EPA 6010B	
Zinc	1.3	J	1	1.0	10.0	10	ug/L	EPA 6010B	

www.encolabs.com

ANALYTICAL RESULTS

Description: 0803-GW2
Matrix: Ground Water
Project: Republic-East Carolina Landfill

Lab Sample ID: C717605-01
Sampled: 01/14/08 11:44
Sampled By: R. Stringfellow/K. Higgs

Received: 01/15/08 17:20
Work Order: C717605

Volatile Organic Compounds by GCMS

** - ENCO Cary certified analyte [NC 591]*

Analyte [CAS Number]	Results	Flag	Units	DF	MDL	MRL	NC SWSL	Method	Analyzed	By	Notes
1,1,1,2-Tetrachloroethane [630-20-6] *	0.16	U	ug/L	1	0.16	1.0	5	EPA 8260B	01/16/08 16:27	jkg	
1,1,1-Trichloroethane [71-55-6] *	0.24	U	ug/L	1	0.24	1.0	1	EPA 8260B	01/16/08 16:27	jkg	
1,1,2,2-Tetrachloroethane [79-34-5] *	0.27	U	ug/L	1	0.27	1.0	3	EPA 8260B	01/16/08 16:27	jkg	
1,1,2-Trichloroethane [79-00-5] *	0.24	U	ug/L	1	0.24	1.0	1	EPA 8260B	01/16/08 16:27	jkg	
1,1-Dichloroethane [75-34-3] *	0.090	U	ug/L	1	0.090	1.0	5	EPA 8260B	01/16/08 16:27	jkg	
1,1-Dichloroethene [75-35-4] *	0.14	U	ug/L	1	0.14	1.0	5	EPA 8260B	01/16/08 16:27	jkg	
1,2,3-Trichloropropane [96-18-4] *	0.32	U	ug/L	1	0.32	1.0	1	EPA 8260B	01/16/08 16:27	jkg	
1,2-Dibromo-3-chloropropane [96-12-8] *	0.19	U	ug/L	1	0.19	1.0	13	EPA 8260B	01/16/08 16:27	jkg	
1,2-Dibromoethane [106-93-4] *	0.19	U	ug/L	1	0.19	1.0	1	EPA 8260B	01/16/08 16:27	jkg	
1,2-Dichlorobenzene [95-50-1] *	0.17	U	ug/L	1	0.17	1.0	5	EPA 8260B	01/16/08 16:27	jkg	
1,2-Dichloroethane [107-06-2] *	0.36	U	ug/L	1	0.36	1.0	1	EPA 8260B	01/16/08 16:27	jkg	
1,2-Dichloropropane [78-87-5] *	0.18	U	ug/L	1	0.18	1.0	1	EPA 8260B	01/16/08 16:27	jkg	
1,4-Dichlorobenzene [106-46-7] *	0.15	U	ug/L	1	0.15	1.0	1	EPA 8260B	01/16/08 16:27	jkg	
2-Butanone [78-93-3] *	0.56	U	ug/L	1	0.56	5.0	100	EPA 8260B	01/16/08 16:27	jkg	
2-Hexanone [591-78-6] *	0.24	U	ug/L	1	0.24	5.0	50	EPA 8260B	01/16/08 16:27	jkg	
4-Methyl-2-pentanone [108-10-1] *	0.36	U	ug/L	1	0.36	5.0	100	EPA 8260B	01/16/08 16:27	jkg	
Acetone [67-64-1] *	0.90	U	ug/L	1	0.90	5.0	100	EPA 8260B	01/16/08 16:27	jkg	
Acrylonitrile [107-13-1] *	2.0	U	ug/L	1	2.0	5.0	200	EPA 8260B	01/16/08 16:27	jkg	
Benzene [71-43-2] *	0.12	U	ug/L	1	0.12	1.0	1	EPA 8260B	01/16/08 16:27	jkg	
Bromochloromethane [74-97-5] *	0.19	U	ug/L	1	0.19	1.0	3	EPA 8260B	01/16/08 16:27	jkg	
Bromodichloromethane [75-27-4] *	0.19	U	ug/L	1	0.19	0.40	1	EPA 8260B	01/16/08 16:27	jkg	
Bromoform [75-25-2] *	0.36	U	ug/L	1	0.36	1.0	3	EPA 8260B	01/16/08 16:27	jkg	
Bromomethane [74-83-9] *	0.21	U	ug/L	1	0.21	1.0	10	EPA 8260B	01/16/08 16:27	jkg	
Carbon disulfide [75-15-0] *	0.12	U	ug/L	1	0.12	5.0	100	EPA 8260B	01/16/08 16:27	jkg	
Carbon tetrachloride [56-23-5] *	0.38	U	ug/L	1	0.38	1.0	1	EPA 8260B	01/16/08 16:27	jkg	
Chlorobenzene [108-90-7] *	0.16	U	ug/L	1	0.16	1.0	3	EPA 8260B	01/16/08 16:27	jkg	
Chloroethane [75-00-3] *	0.40	U	ug/L	1	0.40	1.0	10	EPA 8260B	01/16/08 16:27	jkg	
Chloroform [67-66-3] *	0.16	U	ug/L	1	0.16	1.0	5	EPA 8260B	01/16/08 16:27	jkg	
Chloromethane [74-87-3] *	0.18	U	ug/L	1	0.18	1.0	1	EPA 8260B	01/16/08 16:27	jkg	
cis-1,2-Dichloroethene [156-59-2] *	0.14	U	ug/L	1	0.14	1.0	5	EPA 8260B	01/16/08 16:27	jkg	
cis-1,3-Dichloropropene [10061-01-5] *	0.16	U	ug/L	1	0.16	0.20	1	EPA 8260B	01/16/08 16:27	jkg	
Dibromochloromethane [124-48-1] *	0.18	U	ug/L	1	0.18	1.0	3	EPA 8260B	01/16/08 16:27	jkg	
Dibromomethane [74-95-3] *	0.14	U	ug/L	1	0.14	1.0	10	EPA 8260B	01/16/08 16:27	jkg	
Ethylbenzene [100-41-4] *	0.17	U	ug/L	1	0.17	1.0	1	EPA 8260B	01/16/08 16:27	jkg	
Iodomethane [74-88-4] *	0.23	U	ug/L	1	0.23	2.0	10	EPA 8260B	01/16/08 16:27	jkg	
Methylene chloride [75-09-2] *	0.088	U	ug/L	1	0.088	1.0	1	EPA 8260B	01/16/08 16:27	jkg	
Styrene [100-42-5] *	0.12	U	ug/L	1	0.12	1.0	1	EPA 8260B	01/16/08 16:27	jkg	
Tetrachloroethene [127-18-4] *	0.25	U	ug/L	1	0.25	1.0	1	EPA 8260B	01/16/08 16:27	jkg	
Toluene [108-88-3] *	0.15	U	ug/L	1	0.15	1.0	1	EPA 8260B	01/16/08 16:27	jkg	
trans-1,2-Dichloroethene [156-60-5] *	0.10	U	ug/L	1	0.10	1.0	5	EPA 8260B	01/16/08 16:27	jkg	
trans-1,3-Dichloropropene [10061-02-6] *	0.18	U	ug/L	1	0.18	0.20	1	EPA 8260B	01/16/08 16:27	jkg	
trans-1,4-Dichloro-2-butene [110-57-6] *	0.60	U	ug/L	1	0.60	1.0	100	EPA 8260B	01/16/08 16:27	jkg	
Trichloroethene [79-01-6] *	0.23	U	ug/L	1	0.23	1.0	1	EPA 8260B	01/16/08 16:27	jkg	

www.encolabs.com

Description:	0803-GW2	**Lab Sample ID:**	C717605-01	**Received:**	01/15/08 17:20
Matrix:	Ground Water	**Sampled:**	01/14/08 11:44	**Work Order:**	C717605
Project:	Republic-East Carolina Landfill	**Sampled By:**	R. Stringfellow/K. Higgs		

Volatile Organic Compounds by GCMS

** - ENCO Cary certified analyte [NC 591]*

Analyte [CAS Number]	Results	Flag	Units	DF	MDL	MRL	NC SWSL	Method	Analyzed	By	Notes
Trichlorofluoromethane [75-69-4] *	0.16	U	ug/L	1	0.16	1.0	1	EPA 8260B	01/16/08 16:27	jkg	
Vinyl acetate [108-05-4] *	0.19	U	ug/L	1	0.19	2.0	50	EPA 8260B	01/16/08 16:27	jkg	
Vinyl chloride [75-01-4] *	0.15	U	ug/L	1	0.15	1.0	1	EPA 8260B	01/16/08 16:27	jkg	
Xylenes (Total) [1330-20-7]	0.21	U	ug/L	1	0.21	1.0	5	EPA 8260B	01/16/08 16:27	jkg	

Surrogates	*Results*	*DF*	*Spike Lvl*	*% Rec*	*% Rec Limits*	*Batch*	*Method*	*Analyzed*	*By*	Notes
4-Bromofluorobenzene	*45*	*1*	*50.0*	*89 %*	*69-120*	*8A16004*	*EPA 8260B*	*01/16/08 16:27*	*jkg*	
Dibromofluoromethane	*50*	*1*	*50.0*	*100 %*	*61-120*	*8A16004*	*EPA 8260B*	*01/16/08 16:27*	*jkg*	
Toluene-d8	*42*	*1*	*50.0*	*85 %*	*75-99*	*8A16004*	*EPA 8260B*	*01/16/08 16:27*	*jkg*	

www.encolabs.com

Description:	0803-GW2	**Lab Sample ID:**	C717605-01	**Received:**	01/15/08 17:20
Matrix:	Ground Water	**Sampled:**	01/14/08 11:44	**Work Order:**	C717605
Project:	Republic-East Carolina Landfill	**Sampled By:**	R. Stringfellow/K. Higgs		

Metals by EPA 6000/7000 Series Methods

** - ENCO Cary certified analyte [NC 591]*

Analyte [CAS Number]	Results	Flag	Units	DF	MDL	MRL	NC SWSL	Method	Analyzed	By	Notes
Antimony [7440-36-0] *	0.68	U	ug/L	1	0.68	2.00	6	EPA 6020	01/18/08 10:40	JDH	
Arsenic [7440-38-2] *	2.0	U	ug/L	1	2.0	10.0	10	EPA 6010B	01/24/08 10:53	VLO	
Barium [7440-39-3] *	**405**		ug/L	1	0.20	10.0	100	EPA 6010B	01/24/08 10:53	VLO	
Beryllium [7440-41-7] *	0.70	U	ug/L	1	0.70	1.00	1	EPA 6010B	01/24/08 10:53	VLO	
Cadmium [7440-43-9] *	0.50	U	ug/L	1	0.50	1.00	1	EPA 6010B	01/24/08 10:53	VLO	
Chromium [7440-47-3] *	**2.6**	J	ug/L	1	2.0	10.0	10	EPA 6010B	01/24/08 10:53	VLO	
Cobalt [7440-48-4] *	**11.3**		ug/L	1	2.0	10.0	10	EPA 6010B	01/24/08 10:53	VLO	
Copper [7440-50-8] *	**4.70**	J	ug/L	1	0.60	10.0	10	EPA 6010B	01/24/08 10:53	VLO	
Lead [7439-92-1] *	2.0	U	ug/L	1	2.0	10.0	10	EPA 6010B	01/24/08 10:53	VLO	
Nickel [7440-02-0] *	**11.0**	J	ug/L	1	2.0	10.0	50	EPA 6010B	01/24/08 10:53	VLO	
Selenium [7782-49-2] *	**2.3**	J	ug/L	1	2.0	10.0	10	EPA 6010B	01/24/08 10:53	VLO	
Silver [7440-22-4] *	**2.1**	J	ug/L	1	2.0	10.0	10	EPA 6010B	01/24/08 10:53	VLO	
Thallium [7440-28-0] *	**0.077**	J	ug/L	1	0.036	1.00	5.5	EPA 6020	01/18/08 10:40	JDH	
Vanadium [7440-62-2] *	**1.6**	J	ug/L	1	1.0	10.0	25	EPA 6010B	01/24/08 10:53	VLO	
Zinc [7440-66-6] *	**13.3**		ug/L	1	1.0	10.0	10	EPA 6010B	01/24/08 10:53	VLO	

This report relates only to the sample as received by the laboratory, and may only be reproduced in full.

www.encolabs.com

Description: 0803-GW7 (MS/MSD)
Matrix: Ground Water
Project: Republic-East Carolina Landfill

Lab Sample ID: C717605-02
Sampled: 01/14/08 14:04
Sampled By: R. Stringfellow/K. Higgs

Received: 01/15/08 17:20
Work Order: C717605

Volatile Organic Compounds by GCMS

** - ENCO Cary certified analyte [NC 591]*

Analyte [CAS Number]	Results	Flag	Units	DF	MDL	MRL	NC SWSL	Method	Analyzed	By	Notes
1,1,1,2-Tetrachloroethane [630-20-6] *	0.16	U	ug/L	1	0.16	1.0	5	EPA 8260B	01/16/08 14:30	jkg	
1,1,1-Trichloroethane [71-55-6] *	0.24	U	ug/L	1	0.24	1.0	1	EPA 8260B	01/16/08 14:30	jkg	
1,1,2,2-Tetrachloroethane [79-34-5] *	0.27	U	ug/L	1	0.27	1.0	3	EPA 8260B	01/16/08 14:30	jkg	
1,1,2-Trichloroethane [79-00-5] *	0.24	U	ug/L	1	0.24	1.0	1	EPA 8260B	01/16/08 14:30	jkg	
1,1-Dichloroethane [75-34-3] *	0.090	U	ug/L	1	0.090	1.0	5	EPA 8260B	01/16/08 14:30	jkg	
1,1-Dichloroethene [75-35-4] *	0.14	U	ug/L	1	0.14	1.0	5	EPA 8260B	01/16/08 14:30	jkg	
1,2,3-Trichloropropane [96-18-4] *	0.32	U	ug/L	1	0.32	1.0	1	EPA 8260B	01/16/08 14:30	jkg	
1,2-Dibromo-3-chloropropane [96-12-8] *	0.19	U	ug/L	1	0.19	1.0	13	EPA 8260B	01/16/08 14:30	jkg	
1,2-Dibromoethane [106-93-4] *	0.19	U	ug/L	1	0.19	1.0	1	EPA 8260B	01/16/08 14:30	jkg	
1,2-Dichlorobenzene [95-50-1] *	0.17	U	ug/L	1	0.17	1.0	5	EPA 8260B	01/16/08 14:30	jkg	
1,2-Dichloroethane [107-06-2] *	0.36	U	ug/L	1	0.36	1.0	1	EPA 8260B	01/16/08 14:30	jkg	
1,2-Dichloropropane [78-87-5] *	0.18	U	ug/L	1	0.18	1.0	1	EPA 8260B	01/16/08 14:30	jkg	
1,4-Dichlorobenzene [106-46-7] *	0.15	U	ug/L	1	0.15	1.0	1	EPA 8260B	01/16/08 14:30	jkg	
2-Butanone [78-93-3] *	0.56	U	ug/L	1	0.56	5.0	100	EPA 8260B	01/16/08 14:30	jkg	
2-Hexanone [591-78-6] *	0.24	U	ug/L	1	0.24	5.0	50	EPA 8260B	01/16/08 14:30	jkg	
4-Methyl-2-pentanone [108-10-1] *	0.36	U	ug/L	1	0.36	5.0	100	EPA 8260B	01/16/08 14:30	jkg	
Acetone [67-64-1] *	0.90	U	ug/L	1	0.90	5.0	100	EPA 8260B	01/16/08 14:30	jkg	
Acrylonitrile [107-13-1] *	2.0	U	ug/L	1	2.0	5.0	200	EPA 8260B	01/16/08 14:30	jkg	
Benzene [71-43-2] *	0.12	U	ug/L	1	0.12	1.0	1	EPA 8260B	01/16/08 14:30	jkg	
Bromochloromethane [74-97-5] *	0.19	U	ug/L	1	0.19	1.0	3	EPA 8260B	01/16/08 14:30	jkg	
Bromodichloromethane [75-27-4] *	0.19	U	ug/L	1	0.19	0.40	1	EPA 8260B	01/16/08 14:30	jkg	
Bromoform [75-25-2] *	0.36	U	ug/L	1	0.36	1.0	3	EPA 8260B	01/16/08 14:30	jkg	
Bromomethane [74-83-9] *	0.21	U	ug/L	1	0.21	1.0	10	EPA 8260B	01/16/08 14:30	jkg	
Carbon disulfide [75-15-0] *	0.12	U	ug/L	1	0.12	5.0	100	EPA 8260B	01/16/08 14:30	jkg	
Carbon tetrachloride [56-23-5] *	0.38	U	ug/L	1	0.38	1.0	1	EPA 8260B	01/16/08 14:30	jkg	
Chlorobenzene [108-90-7] *	0.16	U	ug/L	1	0.16	1.0	3	EPA 8260B	01/16/08 14:30	jkg	
Chloroethane [75-00-3] *	0.40	U	ug/L	1	0.40	1.0	10	EPA 8260B	01/16/08 14:30	jkg	
Chloroform [67-66-3] *	0.16	U	ug/L	1	0.16	1.0	5	EPA 8260B	01/16/08 14:30	jkg	
Chloromethane [74-87-3] *	0.18	U	ug/L	1	0.18	1.0	1	EPA 8260B	01/16/08 14:30	jkg	
cis-1,2-Dichloroethene [156-59-2] *	0.14	U	ug/L	1	0.14	1.0	5	EPA 8260B	01/16/08 14:30	jkg	
cis-1,3-Dichloropropene [10061-01-5] *	0.16	U	ug/L	1	0.16	0.20	1	EPA 8260B	01/16/08 14:30	jkg	
Dibromochloromethane [124-48-1] *	0.18	U	ug/L	1	0.18	1.0	3	EPA 8260B	01/16/08 14:30	jkg	
Dibromomethane [74-95-3] *	0.14	U	ug/L	1	0.14	1.0	10	EPA 8260B	01/16/08 14:30	jkg	
Ethylbenzene [100-41-4] *	0.17	U	ug/L	1	0.17	1.0	1	EPA 8260B	01/16/08 14:30	jkg	
Iodomethane [74-88-4] *	0.23	U	ug/L	1	0.23	2.0	10	EPA 8260B	01/16/08 14:30	jkg	
Methylene chloride [75-09-2] *	0.088	U	ug/L	1	0.088	1.0	1	EPA 8260B	01/16/08 14:30	jkg	
Styrene [100-42-5] *	0.12	U	ug/L	1	0.12	1.0	1	EPA 8260B	01/16/08 14:30	jkg	
Tetrachloroethene [127-18-4] *	0.25	U	ug/L	1	0.25	1.0	1	EPA 8260B	01/16/08 14:30	jkg	
Toluene [108-88-3] *	0.15	U	ug/L	1	0.15	1.0	1	EPA 8260B	01/16/08 14:30	jkg	
trans-1,2-Dichloroethene [156-60-5] *	0.10	U	ug/L	1	0.10	1.0	5	EPA 8260B	01/16/08 14:30	jkg	
trans-1,3-Dichloropropene [10061-02-6] *	0.18	U	ug/L	1	0.18	0.20	1	EPA 8260B	01/16/08 14:30	jkg	
trans-1,4-Dichloro-2-butene [110-57-6] *	0.60	U	ug/L	1	0.60	1.0	100	EPA 8260B	01/16/08 14:30	jkg	
Trichloroethene [79-01-6] *	0.23	U	ug/L	1	0.23	1.0	1	EPA 8260B	01/16/08 14:30	jkg	
Trichlorofluoromethane [75-69-4] *	0.16	U	ug/L	1	0.16	1.0	1	EPA 8260B	01/16/08 14:30	jkg	
Vinyl acetate [108-05-4] *	0.19	U	ug/L	1	0.19	2.0	50	EPA 8260B	01/16/08 14:30	jkg	
Vinyl chloride [75-01-4] *	0.15	U	ug/L	1	0.15	1.0	1	EPA 8260B	01/16/08 14:30	jkg	

www.encolabs.com

Description:	0803-GW7 (MS/MSD)	**Lab Sample ID:**	C717605-02	**Received:**	01/15/08 17:20
Matrix:	Ground Water	**Sampled:**	01/14/08 14:04	**Work Order:**	C717605
Project:	Republic-East Carolina Landfill	**Sampled By:**	R. Stringfellow/K. Higgs		

Volatile Organic Compounds by GCMS

** - ENCO Cary certified analyte [NC 591]*

Analyte [CAS Number]	Results	Flag	Units	DF	MDL	MRL	NC SWSL	Method	Analyzed	By	Notes
Xylenes (Total) [1330-20-7]	0.21	U	ug/L	1	0.21	1.0	5	EPA 8260B	01/16/08 14:30	jkg	

Surrogates	*Results*	*DF*	*Spike Lvl*	*% Rec*	*% Rec Limits*	*Batch*	*Method*	*Analyzed*	*By*	Notes
4-Bromofluorobenzene	*44*	*1*	*50.0*	*89 %*	*69-120*	*8A16004*	*EPA 8260B*	*01/16/08 14:30*	*jkg*	
Dibromofluoromethane	*46*	*1*	*50.0*	*91 %*	*61-120*	*8A16004*	*EPA 8260B*	*01/16/08 14:30*	*jkg*	
Toluene-d8	*41*	*1*	*50.0*	*83 %*	*75-99*	*8A16004*	*EPA 8260B*	*01/16/08 14:30*	*jkg*	

www.encolabs.com

Description: 0803-GW7 (MS/MSD)
Matrix: Ground Water
Project: Republic-East Carolina Landfill

Lab Sample ID: C717605-02
Sampled: 01/14/08 14:04
Sampled By: R. Stringfellow/K. Higgs

Received: 01/15/08 17:20
Work Order: C717605

Metals by EPA 6000/7000 Series Methods

** - ENCO Cary certified analyte [NC 591]*

Analyte [CAS Number]	Results	Flag	Units	DF	MDL	MRL	NC SWSL	Method	Analyzed	By	Notes
Antimony [7440-36-0] *	0.68	U	ug/L	1	0.68	2.00	6	EPA 6020	01/18/08 10:31	JDH	
Arsenic [7440-38-2] *	2.0	U	ug/L	1	2.0	10.0	10	EPA 6010B	01/24/08 10:29	VLO	
Barium [7440-39-3] *	**129**		ug/L	1	0.20	10.0	100	EPA 6010B	01/24/08 10:29	VLO	
Beryllium [7440-41-7] *	**1.50**		ug/L	1	0.70	1.00	1	EPA 6010B	01/24/08 10:29	VLO	
Cadmium [7440-43-9] *	0.50	U	ug/L	1	0.50	1.00	1	EPA 6010B	01/24/08 10:29	VLO	
Chromium [7440-47-3] *	2.0	U	ug/L	1	2.0	10.0	10	EPA 6010B	01/24/08 10:29	VLO	
Cobalt [7440-48-4] *	**35.1**		ug/L	1	2.0	10.0	10	EPA 6010B	01/24/08 10:29	VLO	
Copper [7440-50-8] *	**1.60**	J	ug/L	1	0.60	10.0	10	EPA 6010B	01/24/08 10:29	VLO	
Lead [7439-92-1] *	2.0	U	ug/L	1	2.0	10.0	10	EPA 6010B	01/24/08 10:29	VLO	
Nickel [7440-02-0] *	**8.0**	J	ug/L	1	2.0	10.0	50	EPA 6010B	01/24/08 10:29	VLO	
Selenium [7782-49-2] *	2.0	U	ug/L	1	2.0	10.0	10	EPA 6010B	01/24/08 10:29	VLO	
Silver [7440-22-4] *	2.0	U	ug/L	1	2.0	10.0	10	EPA 6010B	01/24/08 10:29	VLO	
Thallium [7440-28-0] *	**0.069**	J	ug/L	1	0.036	1.00	5.5	EPA 6020	01/18/08 10:31	JDH	
Vanadium [7440-62-2] *	1.0	U	ug/L	1	1.0	10.0	25	EPA 6010B	01/24/08 10:29	VLO	
Zinc [7440-66-6] *	**5.7**	J	ug/L	1	1.0	10.0	10	EPA 6010B	01/24/08 10:29	VLO	

This report relates only to the sample as received by the laboratory, and may only be reproduced in full.

www.encolabs.com

Description: 0803-GW8
Matrix: Ground Water
Project: Republic-East Carolina Landfill

Lab Sample ID: C717605-03
Sampled: 01/15/08 10:08
Sampled By: R. Stringfellow/K. Higgs

Received: 01/15/08 17:20
Work Order: C717605

Volatile Organic Compounds by GCMS

** - ENCO Cary certified analyte [NC 591]*

Analyte [CAS Number]	Results	Flag	Units	DF	MDL	MRL	NC SWSL	Method	Analyzed	By	Notes
1,1,1,2-Tetrachloroethane [630-20-6] *	0.16	U	ug/L	1	0.16	1.0	5	EPA 8260B	01/16/08 16:56	jkg	
1,1,1-Trichloroethane [71-55-6] *	0.24	U	ug/L	1	0.24	1.0	1	EPA 8260B	01/16/08 16:56	jkg	
1,1,2,2-Tetrachloroethane [79-34-5] *	0.27	U	ug/L	1	0.27	1.0	3	EPA 8260B	01/16/08 16:56	jkg	
1,1,2-Trichloroethane [79-00-5] *	0.24	U	ug/L	1	0.24	1.0	1	EPA 8260B	01/16/08 16:56	jkg	
1,1-Dichloroethane [75-34-3] *	0.090	U	ug/L	1	0.090	1.0	5	EPA 8260B	01/16/08 16:56	jkg	
1,1-Dichloroethene [75-35-4] *	0.14	U	ug/L	1	0.14	1.0	5	EPA 8260B	01/16/08 16:56	jkg	
1,2,3-Trichloropropane [96-18-4] *	0.32	U	ug/L	1	0.32	1.0	1	EPA 8260B	01/16/08 16:56	jkg	
1,2-Dibromo-3-chloropropane [96-12-8] *	0.19	U	ug/L	1	0.19	1.0	13	EPA 8260B	01/16/08 16:56	jkg	
1,2-Dibromoethane [106-93-4] *	0.19	U	ug/L	1	0.19	1.0	1	EPA 8260B	01/16/08 16:56	jkg	
1,2-Dichlorobenzene [95-50-1] *	0.17	U	ug/L	1	0.17	1.0	5	EPA 8260B	01/16/08 16:56	jkg	
1,2-Dichloroethane [107-06-2] *	0.36	U	ug/L	1	0.36	1.0	1	EPA 8260B	01/16/08 16:56	jkg	
1,2-Dichloropropane [78-87-5] *	0.18	U	ug/L	1	0.18	1.0	1	EPA 8260B	01/16/08 16:56	jkg	
1,4-Dichlorobenzene [106-46-7] *	0.15	U	ug/L	1	0.15	1.0	1	EPA 8260B	01/16/08 16:56	jkg	
2-Butanone [78-93-3] *	0.56	U	ug/L	1	0.56	5.0	100	EPA 8260B	01/16/08 16:56	jkg	
2-Hexanone [591-78-6] *	0.24	U	ug/L	1	0.24	5.0	50	EPA 8260B	01/16/08 16:56	jkg	
4-Methyl-2-pentanone [108-10-1] *	0.36	U	ug/L	1	0.36	5.0	100	EPA 8260B	01/16/08 16:56	jkg	
Acetone [67-64-1] *	0.90	U	ug/L	1	0.90	5.0	100	EPA 8260B	01/16/08 16:56	jkg	
Acrylonitrile [107-13-1] *	2.0	U	ug/L	1	2.0	5.0	200	EPA 8260B	01/16/08 16:56	jkg	
Benzene [71-43-2] *	0.12	U	ug/L	1	0.12	1.0	1	EPA 8260B	01/16/08 16:56	jkg	
Bromochloromethane [74-97-5] *	0.19	U	ug/L	1	0.19	1.0	3	EPA 8260B	01/16/08 16:56	jkg	
Bromodichloromethane [75-27-4] *	0.19	U	ug/L	1	0.19	0.40	1	EPA 8260B	01/16/08 16:56	jkg	
Bromoform [75-25-2] *	0.36	U	ug/L	1	0.36	1.0	3	EPA 8260B	01/16/08 16:56	jkg	
Bromomethane [74-83-9] *	0.21	U	ug/L	1	0.21	1.0	10	EPA 8260B	01/16/08 16:56	jkg	
Carbon disulfide [75-15-0] *	0.12	U	ug/L	1	0.12	5.0	100	EPA 8260B	01/16/08 16:56	jkg	
Carbon tetrachloride [56-23-5] *	0.38	U	ug/L	1	0.38	1.0	1	EPA 8260B	01/16/08 16:56	jkg	
Chlorobenzene [108-90-7] *	0.16	U	ug/L	1	0.16	1.0	3	EPA 8260B	01/16/08 16:56	jkg	
Chloroethane [75-00-3] *	0.40	U	ug/L	1	0.40	1.0	10	EPA 8260B	01/16/08 16:56	jkg	
Chloroform [67-66-3] *	0.16	U	ug/L	1	0.16	1.0	5	EPA 8260B	01/16/08 16:56	jkg	
Chloromethane [74-87-3] *	0.18	U	ug/L	1	0.18	1.0	1	EPA 8260B	01/16/08 16:56	jkg	
cis-1,2-Dichloroethene [156-59-2] *	0.14	U	ug/L	1	0.14	1.0	5	EPA 8260B	01/16/08 16:56	jkg	
cis-1,3-Dichloropropene [10061-01-5] *	0.16	U	ug/L	1	0.16	0.20	1	EPA 8260B	01/16/08 16:56	jkg	
Dibromochloromethane [124-48-1] *	0.18	U	ug/L	1	0.18	1.0	3	EPA 8260B	01/16/08 16:56	jkg	
Dibromomethane [74-95-3] *	0.14	U	ug/L	1	0.14	1.0	10	EPA 8260B	01/16/08 16:56	jkg	
Ethylbenzene [100-41-4] *	0.17	U	ug/L	1	0.17	1.0	1	EPA 8260B	01/16/08 16:56	jkg	
Iodomethane [74-88-4] *	0.23	U	ug/L	1	0.23	2.0	10	EPA 8260B	01/16/08 16:56	jkg	
Methylene chloride [75-09-2] *	0.088	U	ug/L	1	0.088	1.0	1	EPA 8260B	01/16/08 16:56	jkg	
Styrene [100-42-5] *	0.12	U	ug/L	1	0.12	1.0	1	EPA 8260B	01/16/08 16:56	jkg	
Tetrachloroethene [127-18-4] *	0.25	U	ug/L	1	0.25	1.0	1	EPA 8260B	01/16/08 16:56	jkg	
Toluene [108-88-3] *	0.15	U	ug/L	1	0.15	1.0	1	EPA 8260B	01/16/08 16:56	jkg	
trans-1,2-Dichloroethene [156-60-5] *	0.10	U	ug/L	1	0.10	1.0	5	EPA 8260B	01/16/08 16:56	jkg	
trans-1,3-Dichloropropene [10061-02-6] *	0.18	U	ug/L	1	0.18	0.20	1	EPA 8260B	01/16/08 16:56	jkg	
trans-1,4-Dichloro-2-butene [110-57-6] *	0.60	U	ug/L	1	0.60	1.0	100	EPA 8260B	01/16/08 16:56	jkg	
Trichloroethene [79-01-6] *	0.23	U	ug/L	1	0.23	1.0	1	EPA 8260B	01/16/08 16:56	jkg	
Trichlorofluoromethane [75-69-4] *	0.16	U	ug/L	1	0.16	1.0	1	EPA 8260B	01/16/08 16:56	jkg	
Vinyl acetate [108-05-4] *	0.19	U	ug/L	1	0.19	2.0	50	EPA 8260B	01/16/08 16:56	jkg	
Vinyl chloride [75-01-4] *	0.15	U	ug/L	1	0.15	1.0	1	EPA 8260B	01/16/08 16:56	jkg	

www.encolabs.com

Description:	0803-GW8	**Lab Sample ID:**	C717605-03	**Received:**	01/15/08 17:20
Matrix:	Ground Water	**Sampled:**	01/15/08 10:08	**Work Order:**	C717605
Project:	Republic-East Carolina Landfill	**Sampled By:**	R. Stringfellow/K. Higgs		

Volatile Organic Compounds by GCMS

** - ENCO Cary certified analyte [NC 591]*

Analyte [CAS Number]	Results	Flag	Units	DF	MDL	MRL	NC SWSL	Method	Analyzed	By	Notes
Xylenes (Total) [1330-20-7]	0.21	U	ug/L	1	0.21	1.0	5	EPA 8260B	01/16/08 16:56	jkg	

Surrogates	*Results*	*DF*	*Spike Lvl*	*% Rec*	*% Rec Limits*	*Batch*	*Method*	*Analyzed*	*By*	Notes
4-Bromofluorobenzene	*44*	*1*	*50.0*	*88 %*	*69-120*	*8A16004*	*EPA 8260B*	*01/16/08 16:56*	*jkg*	
Dibromofluoromethane	*50*	*1*	*50.0*	*100 %*	*61-120*	*8A16004*	*EPA 8260B*	*01/16/08 16:56*	*jkg*	
Toluene-d8	*42*	*1*	*50.0*	*85 %*	*75-99*	*8A16004*	*EPA 8260B*	*01/16/08 16:56*	*jkg*	

www.encolabs.com

Description: 0803-GW8
Matrix: Ground Water
Project: Republic-East Carolina Landfill

Lab Sample ID: C717605-03
Sampled: 01/15/08 10:08
Sampled By: R. Stringfellow/K. Higgs

Received: 01/15/08 17:20
Work Order: C717605

Metals by EPA 6000/7000 Series Methods

** - ENCO Cary certified analyte [NC 591]*

Analyte [CAS Number]	Results	Flag	Units	DF	MDL	MRL	NC SWSL	Method	Analyzed	By	Notes
Antimony [7440-36-0] *	0.68	U	ug/L	1	0.68	2.00	6	EPA 6020	01/18/08 10:42	JDH	
Arsenic [7440-38-2] *	**2.1**	J	ug/L	1	2.0	10.0	10	EPA 6010B	01/24/08 11:00	VLO	
Barium [7440-39-3] *	**127**		ug/L	1	0.20	10.0	100	EPA 6010B	01/24/08 11:00	VLO	
Beryllium [7440-41-7] *	0.70	U	ug/L	1	0.70	1.00	1	EPA 6010B	01/24/08 11:00	VLO	
Cadmium [7440-43-9] *	0.50	U	ug/L	1	0.50	1.00	1	EPA 6010B	01/24/08 11:00	VLO	
Chromium [7440-47-3] *	2.0	U	ug/L	1	2.0	10.0	10	EPA 6010B	01/24/08 11:00	VLO	
Cobalt [7440-48-4] *	**4.2**	J	ug/L	1	2.0	10.0	10	EPA 6010B	01/24/08 11:00	VLO	
Copper [7440-50-8] *	**1.30**	J	ug/L	1	0.60	10.0	10	EPA 6010B	01/24/08 11:00	VLO	
Lead [7439-92-1] *	2.0	U	ug/L	1	2.0	10.0	10	EPA 6010B	01/24/08 11:00	VLO	
Nickel [7440-02-0] *	**5.8**	J	ug/L	1	2.0	10.0	50	EPA 6010B	01/24/08 11:00	VLO	
Selenium [7782-49-2] *	**2.0**	J	ug/L	1	2.0	10.0	10	EPA 6010B	01/24/08 11:00	VLO	
Silver [7440-22-4] *	2.0	U	ug/L	1	2.0	10.0	10	EPA 6010B	01/24/08 11:00	VLO	
Thallium [7440-28-0] *	0.036	U	ug/L	1	0.036	1.00	5.5	EPA 6020	01/18/08 10:42	JDH	
Vanadium [7440-62-2] *	**1.1**	J	ug/L	1	1.0	10.0	25	EPA 6010B	01/24/08 11:00	VLO	
Zinc [7440-66-6] *	**4.1**	J	ug/L	1	1.0	10.0	10	EPA 6010B	01/24/08 11:00	VLO	

This report relates only to the sample as received by the laboratory, and may only be reproduced in full.

www.encolabs.com

Description: 0803-GW9
Matrix: Ground Water
Project: Republic-East Carolina Landfill

Lab Sample ID: C717605-04
Sampled: 01/15/08 09:28
Sampled By: R. Stringfellow/K. Higgs

Received: 01/15/08 17:20
Work Order: C717605

Volatile Organic Compounds by GCMS

** - ENCO Cary certified analyte [NC 591]*

Analyte [CAS Number]	Results	Flag	Units	DF	MDL	MRL	NC SWSL	Method	Analyzed	By	Notes
1,1,1,2-Tetrachloroethane [630-20-6] *	0.16	U	ug/L	1	0.16	1.0	5	EPA 8260B	01/16/08 17:25	jkg	
1,1,1-Trichloroethane [71-55-6] *	0.24	U	ug/L	1	0.24	1.0	1	EPA 8260B	01/16/08 17:25	jkg	
1,1,2,2-Tetrachloroethane [79-34-5] *	0.27	U	ug/L	1	0.27	1.0	3	EPA 8260B	01/16/08 17:25	jkg	
1,1,2-Trichloroethane [79-00-5] *	0.24	U	ug/L	1	0.24	1.0	1	EPA 8260B	01/16/08 17:25	jkg	
1,1-Dichloroethane [75-34-3] *	0.090	U	ug/L	1	0.090	1.0	5	EPA 8260B	01/16/08 17:25	jkg	
1,1-Dichloroethene [75-35-4] *	0.14	U	ug/L	1	0.14	1.0	5	EPA 8260B	01/16/08 17:25	jkg	
1,2,3-Trichloropropane [96-18-4] *	0.32	U	ug/L	1	0.32	1.0	1	EPA 8260B	01/16/08 17:25	jkg	
1,2-Dibromo-3-chloropropane [96-12-8] *	0.19	U	ug/L	1	0.19	1.0	13	EPA 8260B	01/16/08 17:25	jkg	
1,2-Dibromoethane [106-93-4] *	0.19	U	ug/L	1	0.19	1.0	1	EPA 8260B	01/16/08 17:25	jkg	
1,2-Dichlorobenzene [95-50-1] *	0.17	U	ug/L	1	0.17	1.0	5	EPA 8260B	01/16/08 17:25	jkg	
1,2-Dichloroethane [107-06-2] *	0.36	U	ug/L	1	0.36	1.0	1	EPA 8260B	01/16/08 17:25	jkg	
1,2-Dichloropropane [78-87-5] *	0.18	U	ug/L	1	0.18	1.0	1	EPA 8260B	01/16/08 17:25	jkg	
1,4-Dichlorobenzene [106-46-7] *	0.15	U	ug/L	1	0.15	1.0	1	EPA 8260B	01/16/08 17:25	jkg	
2-Butanone [78-93-3] *	0.56	U	ug/L	1	0.56	5.0	100	EPA 8260B	01/16/08 17:25	jkg	
2-Hexanone [591-78-6] *	0.24	U	ug/L	1	0.24	5.0	50	EPA 8260B	01/16/08 17:25	jkg	
4-Methyl-2-pentanone [108-10-1] *	0.36	U	ug/L	1	0.36	5.0	100	EPA 8260B	01/16/08 17:25	jkg	
Acetone [67-64-1] *	0.90	U	ug/L	1	0.90	5.0	100	EPA 8260B	01/16/08 17:25	jkg	
Acrylonitrile [107-13-1] *	2.0	U	ug/L	1	2.0	5.0	200	EPA 8260B	01/16/08 17:25	jkg	
Benzene [71-43-2] *	0.12	U	ug/L	1	0.12	1.0	1	EPA 8260B	01/16/08 17:25	jkg	
Bromochloromethane [74-97-5] *	0.19	U	ug/L	1	0.19	1.0	3	EPA 8260B	01/16/08 17:25	jkg	
Bromodichloromethane [75-27-4] *	0.19	U	ug/L	1	0.19	0.40	1	EPA 8260B	01/16/08 17:25	jkg	
Bromoform [75-25-2] *	0.36	U	ug/L	1	0.36	1.0	3	EPA 8260B	01/16/08 17:25	jkg	
Bromomethane [74-83-9] *	0.21	U	ug/L	1	0.21	1.0	10	EPA 8260B	01/16/08 17:25	jkg	
Carbon disulfide [75-15-0] *	0.12	U	ug/L	1	0.12	5.0	100	EPA 8260B	01/16/08 17:25	jkg	
Carbon tetrachloride [56-23-5] *	0.38	U	ug/L	1	0.38	1.0	1	EPA 8260B	01/16/08 17:25	jkg	
Chlorobenzene [108-90-7] *	0.16	U	ug/L	1	0.16	1.0	3	EPA 8260B	01/16/08 17:25	jkg	
Chloroethane [75-00-3] *	0.40	U	ug/L	1	0.40	1.0	10	EPA 8260B	01/16/08 17:25	jkg	
Chloroform [67-66-3] *	0.16	U	ug/L	1	0.16	1.0	5	EPA 8260B	01/16/08 17:25	jkg	
Chloromethane [74-87-3] *	0.18	U	ug/L	1	0.18	1.0	1	EPA 8260B	01/16/08 17:25	jkg	
cis-1,2-Dichloroethene [156-59-2] *	0.14	U	ug/L	1	0.14	1.0	5	EPA 8260B	01/16/08 17:25	jkg	
cis-1,3-Dichloropropene [10061-01-5] *	0.16	U	ug/L	1	0.16	0.20	1	EPA 8260B	01/16/08 17:25	jkg	
Dibromochloromethane [124-48-1] *	0.18	U	ug/L	1	0.18	1.0	3	EPA 8260B	01/16/08 17:25	jkg	
Dibromomethane [74-95-3] *	0.14	U	ug/L	1	0.14	1.0	10	EPA 8260B	01/16/08 17:25	jkg	
Ethylbenzene [100-41-4] *	0.17	U	ug/L	1	0.17	1.0	1	EPA 8260B	01/16/08 17:25	jkg	
Iodomethane [74-88-4] *	0.23	U	ug/L	1	0.23	2.0	10	EPA 8260B	01/16/08 17:25	jkg	
Methylene chloride [75-09-2] *	0.088	U	ug/L	1	0.088	1.0	1	EPA 8260B	01/16/08 17:25	jkg	
Styrene [100-42-5] *	0.12	U	ug/L	1	0.12	1.0	1	EPA 8260B	01/16/08 17:25	jkg	
Tetrachloroethene [127-18-4] *	0.25	U	ug/L	1	0.25	1.0	1	EPA 8260B	01/16/08 17:25	jkg	
Toluene [108-88-3] *	0.15	U	ug/L	1	0.15	1.0	1	EPA 8260B	01/16/08 17:25	jkg	
trans-1,2-Dichloroethene [156-60-5] *	0.10	U	ug/L	1	0.10	1.0	5	EPA 8260B	01/16/08 17:25	jkg	
trans-1,3-Dichloropropene [10061-02-6] *	0.18	U	ug/L	1	0.18	0.20	1	EPA 8260B	01/16/08 17:25	jkg	
trans-1,4-Dichloro-2-butene [110-57-6] *	0.60	U	ug/L	1	0.60	1.0	100	EPA 8260B	01/16/08 17:25	jkg	
Trichloroethene [79-01-6] *	0.23	U	ug/L	1	0.23	1.0	1	EPA 8260B	01/16/08 17:25	jkg	
Trichlorofluoromethane [75-69-4] *	0.16	U	ug/L	1	0.16	1.0	1	EPA 8260B	01/16/08 17:25	jkg	
Vinyl acetate [108-05-4] *	0.19	U	ug/L	1	0.19	2.0	50	EPA 8260B	01/16/08 17:25	jkg	
Vinyl chloride [75-01-4] *	0.15	U	ug/L	1	0.15	1.0	1	EPA 8260B	01/16/08 17:25	jkg	

www.encolabs.com

Description:	0803-GW9	**Lab Sample ID:**	C717605-04	**Received:**	01/15/08 17:20
Matrix:	Ground Water	**Sampled:**	01/15/08 09:28	**Work Order:**	C717605
Project:	Republic-East Carolina Landfill	**Sampled By:**	R. Stringfellow/K. Higgs		

Volatile Organic Compounds by GCMS

** - ENCO Cary certified analyte [NC 591]*

Analyte [CAS Number]	Results	Flag	Units	DF	MDL	MRL	NC SWSL	Method	Analyzed	By	Notes
Xylenes (Total) [1330-20-7]	0.21	U	ug/L	1	0.21	1.0	5	EPA 8260B	01/16/08 17:25	jkg	

Surrogates	*Results*	*DF*	*Spike Lvl*	*% Rec*	*% Rec Limits*	*Batch*	*Method*	*Analyzed*	*By*	Notes
4-Bromofluorobenzene	*43*	*1*	*50.0*	*87 %*	*69-120*	*8A16004*	*EPA 8260B*	*01/16/08 17:25*	*jkg*	
Dibromofluoromethane	*51*	*1*	*50.0*	*102 %*	*61-120*	*8A16004*	*EPA 8260B*	*01/16/08 17:25*	*jkg*	
Toluene-d8	*41*	*1*	*50.0*	*81 %*	*75-99*	*8A16004*	*EPA 8260B*	*01/16/08 17:25*	*jkg*	

www.encolabs.com

Description: 0803-GW9
Matrix: Ground Water
Project: Republic-East Carolina Landfill

Lab Sample ID: C717605-04
Sampled: 01/15/08 09:28
Sampled By: R. Stringfellow/K. Higgs

Received: 01/15/08 17:20
Work Order: C717605

Metals by EPA 6000/7000 Series Methods

** - ENCO Cary certified analyte [NC 591]*

Analyte [CAS Number]	Results	Flag	Units	DF	MDL	MRL	NC SWSL	Method	Analyzed	By	Notes
Antimony [7440-36-0] *	0.68	U	ug/L	1	0.68	2.00	6	EPA 6020	01/18/08 10:45	JDH	
Arsenic [7440-38-2] *	**2.7**	J	ug/L	1	2.0	10.0	10	EPA 6010B	01/24/08 11:07	VLO	
Barium [7440-39-3] *	**59.0**	J	ug/L	1	0.20	10.0	100	EPA 6010B	01/24/08 11:07	VLO	
Beryllium [7440-41-7] *	0.70	U	ug/L	1	0.70	1.00	1	EPA 6010B	01/24/08 11:07	VLO	
Cadmium [7440-43-9] *	0.50	U	ug/L	1	0.50	1.00	1	EPA 6010B	01/24/08 11:07	VLO	
Chromium [7440-47-3] *	2.0	U	ug/L	1	2.0	10.0	10	EPA 6010B	01/24/08 11:07	VLO	
Cobalt [7440-48-4] *	**3.2**	J	ug/L	1	2.0	10.0	10	EPA 6010B	01/24/08 11:07	VLO	
Copper [7440-50-8] *	**1.30**	J	ug/L	1	0.60	10.0	10	EPA 6010B	01/24/08 11:07	VLO	
Lead [7439-92-1] *	2.0	U	ug/L	1	2.0	10.0	10	EPA 6010B	01/24/08 11:07	VLO	
Nickel [7440-02-0] *	**3.7**	J	ug/L	1	2.0	10.0	50	EPA 6010B	01/24/08 11:07	VLO	
Selenium [7782-49-2] *	2.0	U	ug/L	1	2.0	10.0	10	EPA 6010B	01/24/08 11:07	VLO	
Silver [7440-22-4] *	**3.1**	J	ug/L	1	2.0	10.0	10	EPA 6010B	01/24/08 11:07	VLO	
Thallium [7440-28-0] *	0.036	U	ug/L	1	0.036	1.00	5.5	EPA 6020	01/18/08 10:45	JDH	
Vanadium [7440-62-2] *	**2.7**	J	ug/L	1	1.0	10.0	25	EPA 6010B	01/24/08 11:07	VLO	
Zinc [7440-66-6] *	**6.0**	J	ug/L	1	1.0	10.0	10	EPA 6010B	01/24/08 11:07	VLO	

This report relates only to the sample as received by the laboratory, and may only be reproduced in full.

www.encolabs.com

Description: 0803-GW10
Matrix: Ground Water
Project: Republic-East Carolina Landfill

Lab Sample ID: C717605-05
Sampled: 01/15/08 08:30
Sampled By: R. Stringfellow/K. Higgs

Received: 01/15/08 17:20
Work Order: C717605

Volatile Organic Compounds by GCMS

** - ENCO Cary certified analyte [NC 591]*

Analyte [CAS Number]	Results	Flag	Units	DF	MDL	MRL	NC SWSL	Method	Analyzed	By	Notes
1,1,1,2-Tetrachloroethane [630-20-6] *	0.16	U	ug/L	1	0.16	1.0	5	EPA 8260B	01/16/08 17:54	jkg	
1,1,1-Trichloroethane [71-55-6] *	0.24	U	ug/L	1	0.24	1.0	1	EPA 8260B	01/16/08 17:54	jkg	
1,1,2,2-Tetrachloroethane [79-34-5] *	0.27	U	ug/L	1	0.27	1.0	3	EPA 8260B	01/16/08 17:54	jkg	
1,1,2-Trichloroethane [79-00-5] *	0.24	U	ug/L	1	0.24	1.0	1	EPA 8260B	01/16/08 17:54	jkg	
1,1-Dichloroethane [75-34-3] *	0.090	U	ug/L	1	0.090	1.0	5	EPA 8260B	01/16/08 17:54	jkg	
1,1-Dichloroethene [75-35-4] *	0.14	U	ug/L	1	0.14	1.0	5	EPA 8260B	01/16/08 17:54	jkg	
1,2,3-Trichloropropane [96-18-4] *	0.32	U	ug/L	1	0.32	1.0	1	EPA 8260B	01/16/08 17:54	jkg	
1,2-Dibromo-3-chloropropane [96-12-8] *	0.19	U	ug/L	1	0.19	1.0	13	EPA 8260B	01/16/08 17:54	jkg	
1,2-Dibromoethane [106-93-4] *	0.19	U	ug/L	1	0.19	1.0	1	EPA 8260B	01/16/08 17:54	jkg	
1,2-Dichlorobenzene [95-50-1] *	0.17	U	ug/L	1	0.17	1.0	5	EPA 8260B	01/16/08 17:54	jkg	
1,2-Dichloroethane [107-06-2] *	0.36	U	ug/L	1	0.36	1.0	1	EPA 8260B	01/16/08 17:54	jkg	
1,2-Dichloropropane [78-87-5] *	0.18	U	ug/L	1	0.18	1.0	1	EPA 8260B	01/16/08 17:54	jkg	
1,4-Dichlorobenzene [106-46-7] *	0.15	U	ug/L	1	0.15	1.0	1	EPA 8260B	01/16/08 17:54	jkg	
2-Butanone [78-93-3] *	0.56	U	ug/L	1	0.56	5.0	100	EPA 8260B	01/16/08 17:54	jkg	
2-Hexanone [591-78-6] *	0.24	U	ug/L	1	0.24	5.0	50	EPA 8260B	01/16/08 17:54	jkg	
4-Methyl-2-pentanone [108-10-1] *	0.36	U	ug/L	1	0.36	5.0	100	EPA 8260B	01/16/08 17:54	jkg	
Acetone [67-64-1] *	0.90	U	ug/L	1	0.90	5.0	100	EPA 8260B	01/16/08 17:54	jkg	
Acrylonitrile [107-13-1] *	2.0	U	ug/L	1	2.0	5.0	200	EPA 8260B	01/16/08 17:54	jkg	
Benzene [71-43-2] *	0.12	U	ug/L	1	0.12	1.0	1	EPA 8260B	01/16/08 17:54	jkg	
Bromochloromethane [74-97-5] *	0.19	U	ug/L	1	0.19	1.0	3	EPA 8260B	01/16/08 17:54	jkg	
Bromodichloromethane [75-27-4] *	0.19	U	ug/L	1	0.19	0.40	1	EPA 8260B	01/16/08 17:54	jkg	
Bromoform [75-25-2] *	0.36	U	ug/L	1	0.36	1.0	3	EPA 8260B	01/16/08 17:54	jkg	
Bromomethane [74-83-9] *	0.21	U	ug/L	1	0.21	1.0	10	EPA 8260B	01/16/08 17:54	jkg	
Carbon disulfide [75-15-0] *	0.12	U	ug/L	1	0.12	5.0	100	EPA 8260B	01/16/08 17:54	jkg	
Carbon tetrachloride [56-23-5] *	0.38	U	ug/L	1	0.38	1.0	1	EPA 8260B	01/16/08 17:54	jkg	
Chlorobenzene [108-90-7] *	0.16	U	ug/L	1	0.16	1.0	3	EPA 8260B	01/16/08 17:54	jkg	
Chloroethane [75-00-3] *	0.40	U	ug/L	1	0.40	1.0	10	EPA 8260B	01/16/08 17:54	jkg	
Chloroform [67-66-3] *	0.16	U	ug/L	1	0.16	1.0	5	EPA 8260B	01/16/08 17:54	jkg	
Chloromethane [74-87-3] *	0.18	U	ug/L	1	0.18	1.0	1	EPA 8260B	01/16/08 17:54	jkg	
cis-1,2-Dichloroethene [156-59-2] *	0.14	U	ug/L	1	0.14	1.0	5	EPA 8260B	01/16/08 17:54	jkg	
cis-1,3-Dichloropropene [10061-01-5] *	0.16	U	ug/L	1	0.16	0.20	1	EPA 8260B	01/16/08 17:54	jkg	
Dibromochloromethane [124-48-1] *	0.18	U	ug/L	1	0.18	1.0	3	EPA 8260B	01/16/08 17:54	jkg	
Dibromomethane [74-95-3] *	0.14	U	ug/L	1	0.14	1.0	10	EPA 8260B	01/16/08 17:54	jkg	
Ethylbenzene [100-41-4] *	0.17	U	ug/L	1	0.17	1.0	1	EPA 8260B	01/16/08 17:54	jkg	
Iodomethane [74-88-4] *	0.23	U	ug/L	1	0.23	2.0	10	EPA 8260B	01/16/08 17:54	jkg	
Methylene chloride [75-09-2] *	0.088	U	ug/L	1	0.088	1.0	1	EPA 8260B	01/16/08 17:54	jkg	
Styrene [100-42-5] *	0.12	U	ug/L	1	0.12	1.0	1	EPA 8260B	01/16/08 17:54	jkg	
Tetrachloroethene [127-18-4] *	0.25	U	ug/L	1	0.25	1.0	1	EPA 8260B	01/16/08 17:54	jkg	
Toluene [108-88-3] *	0.15	U	ug/L	1	0.15	1.0	1	EPA 8260B	01/16/08 17:54	jkg	
trans-1,2-Dichloroethene [156-60-5] *	0.10	U	ug/L	1	0.10	1.0	5	EPA 8260B	01/16/08 17:54	jkg	
trans-1,3-Dichloropropene [10061-02-6] *	0.18	U	ug/L	1	0.18	0.20	1	EPA 8260B	01/16/08 17:54	jkg	
trans-1,4-Dichloro-2-butene [110-57-6] *	0.60	U	ug/L	1	0.60	1.0	100	EPA 8260B	01/16/08 17:54	jkg	
Trichloroethene [79-01-6] *	0.23	U	ug/L	1	0.23	1.0	1	EPA 8260B	01/16/08 17:54	jkg	
Trichlorofluoromethane [75-69-4] *	0.16	U	ug/L	1	0.16	1.0	1	EPA 8260B	01/16/08 17:54	jkg	
Vinyl acetate [108-05-4] *	0.19	U	ug/L	1	0.19	2.0	50	EPA 8260B	01/16/08 17:54	jkg	
Vinyl chloride [75-01-4] *	0.15	U	ug/L	1	0.15	1.0	1	EPA 8260B	01/16/08 17:54	jkg	

www.encolabs.com

Description:	0803-GW10	**Lab Sample ID:**	C717605-05	**Received:**	01/15/08 17:20
Matrix:	Ground Water	**Sampled:**	01/15/08 08:30	**Work Order:**	C717605
Project:	Republic-East Carolina Landfill	**Sampled By:**	R. Stringfellow/K. Higgs		

Volatile Organic Compounds by GCMS

** - ENCO Cary certified analyte [NC 591]*

Analyte [CAS Number]	Results	Flag	Units	DF	MDL	MRL	NC SWSL	Method	Analyzed	By	Notes
Xylenes (Total) [1330-20-7]	0.21	U	ug/L	1	0.21	1.0	5	EPA 8260B	01/16/08 17:54	jkg	

Surrogates	*Results*	*DF*	*Spike Lvl*	*% Rec*	*% Rec Limits*	*Batch*	*Method*	*Analyzed*	*By*	Notes
4-Bromofluorobenzene	*45*	*1*	*50.0*	*90 %*	*69-120*	*8A16004*	*EPA 8260B*	*01/16/08 17:54*	*jkg*	
Dibromofluoromethane	*50*	*1*	*50.0*	*101 %*	*61-120*	*8A16004*	*EPA 8260B*	*01/16/08 17:54*	*jkg*	
Toluene-d8	*40*	*1*	*50.0*	*80 %*	*75-99*	*8A16004*	*EPA 8260B*	*01/16/08 17:54*	*jkg*	

www.encolabs.com

Description:	0803-GW10	**Lab Sample ID:**	C717605-05	**Received:**	01/15/08 17:20
Matrix:	Ground Water	**Sampled:**	01/15/08 08:30	**Work Order:**	C717605
Project:	Republic-East Carolina Landfill	**Sampled By:**	R. Stringfellow/K. Higgs		

Metals by EPA 6000/7000 Series Methods

** - ENCO Cary certified analyte [NC 591]*

Analyte [CAS Number]	Results	Flag	Units	DF	MDL	MRL	NC SWSL	Method	Analyzed	By	Notes
Antimony [7440-36-0] *	0.68	U	ug/L	1	0.68	2.00	6	EPA 6020	01/18/08 10:48	JDH	
Arsenic [7440-38-2] *	2.0	U	ug/L	1	2.0	10.0	10	EPA 6010B	01/24/08 11:14	VLO	
Barium [7440-39-3] *	**94.6**	J	ug/L	1	0.20	10.0	100	EPA 6010B	01/24/08 11:14	VLO	
Beryllium [7440-41-7] *	0.70	U	ug/L	1	0.70	1.00	1	EPA 6010B	01/24/08 11:14	VLO	
Cadmium [7440-43-9] *	0.50	U	ug/L	1	0.50	1.00	1	EPA 6010B	01/24/08 11:14	VLO	
Chromium [7440-47-3] *	2.0	U	ug/L	1	2.0	10.0	10	EPA 6010B	01/24/08 11:14	VLO	
Cobalt [7440-48-4] *	**3.8**	J	ug/L	1	2.0	10.0	10	EPA 6010B	01/24/08 11:14	VLO	
Copper [7440-50-8] *	0.60	U	ug/L	1	0.60	10.0	10	EPA 6010B	01/24/08 11:14	VLO	
Lead [7439-92-1] *	2.0	U	ug/L	1	2.0	10.0	10	EPA 6010B	01/24/08 11:14	VLO	
Nickel [7440-02-0] *	**2.0**	J	ug/L	1	2.0	10.0	50	EPA 6010B	01/24/08 11:14	VLO	
Selenium [7782-49-2] *	2.0	U	ug/L	1	2.0	10.0	10	EPA 6010B	01/24/08 11:14	VLO	
Silver [7440-22-4] *	2.0	U	ug/L	1	2.0	10.0	10	EPA 6010B	01/24/08 11:14	VLO	
Thallium [7440-28-0] *	0.036	U	ug/L	1	0.036	1.00	5.5	EPA 6020	01/18/08 10:48	JDH	
Vanadium [7440-62-2] *	1.0	U	ug/L	1	1.0	10.0	25	EPA 6010B	01/24/08 11:14	VLO	
Zinc [7440-66-6] *	**2.9**	J	ug/L	1	1.0	10.0	10	EPA 6010B	01/24/08 11:14	VLO	

This report relates only to the sample as received by the laboratory, and may only be reproduced in full.

www.encolabs.com

Description: 0803-GW11
Matrix: Ground Water
Project: Republic-East Carolina Landfill

Lab Sample ID: C717605-06
Sampled: 01/14/08 16:03
Sampled By: R. Stringfellow/K. Higgs

Received: 01/15/08 17:20
Work Order: C717605

Volatile Organic Compounds by GCMS

** - ENCO Cary certified analyte [NC 591]*

Analyte [CAS Number]	Results	Flag	Units	DF	MDL	MRL	NC SWSL	Method	Analyzed	By	Notes
1,1,1,2-Tetrachloroethane [630-20-6] *	0.16	U	ug/L	1	0.16	1.0	5	EPA 8260B	01/16/08 18:23	jkg	
1,1,1-Trichloroethane [71-55-6] *	0.24	U	ug/L	1	0.24	1.0	1	EPA 8260B	01/16/08 18:23	jkg	
1,1,2,2-Tetrachloroethane [79-34-5] *	0.27	U	ug/L	1	0.27	1.0	3	EPA 8260B	01/16/08 18:23	jkg	
1,1,2-Trichloroethane [79-00-5] *	0.24	U	ug/L	1	0.24	1.0	1	EPA 8260B	01/16/08 18:23	jkg	
1,1-Dichloroethane [75-34-3] *	0.090	U	ug/L	1	0.090	1.0	5	EPA 8260B	01/16/08 18:23	jkg	
1,1-Dichloroethene [75-35-4] *	0.14	U	ug/L	1	0.14	1.0	5	EPA 8260B	01/16/08 18:23	jkg	
1,2,3-Trichloropropane [96-18-4] *	0.32	U	ug/L	1	0.32	1.0	1	EPA 8260B	01/16/08 18:23	jkg	
1,2-Dibromo-3-chloropropane [96-12-8] *	0.19	U	ug/L	1	0.19	1.0	13	EPA 8260B	01/16/08 18:23	jkg	
1,2-Dibromoethane [106-93-4] *	0.19	U	ug/L	1	0.19	1.0	1	EPA 8260B	01/16/08 18:23	jkg	
1,2-Dichlorobenzene [95-50-1] *	0.17	U	ug/L	1	0.17	1.0	5	EPA 8260B	01/16/08 18:23	jkg	
1,2-Dichloroethane [107-06-2] *	0.36	U	ug/L	1	0.36	1.0	1	EPA 8260B	01/16/08 18:23	jkg	
1,2-Dichloropropane [78-87-5] *	0.18	U	ug/L	1	0.18	1.0	1	EPA 8260B	01/16/08 18:23	jkg	
1,4-Dichlorobenzene [106-46-7] *	0.15	U	ug/L	1	0.15	1.0	1	EPA 8260B	01/16/08 18:23	jkg	
2-Butanone [78-93-3] *	0.56	U	ug/L	1	0.56	5.0	100	EPA 8260B	01/16/08 18:23	jkg	
2-Hexanone [591-78-6] *	0.24	U	ug/L	1	0.24	5.0	50	EPA 8260B	01/16/08 18:23	jkg	
4-Methyl-2-pentanone [108-10-1] *	0.36	U	ug/L	1	0.36	5.0	100	EPA 8260B	01/16/08 18:23	jkg	
Acetone [67-64-1] *	0.90	U	ug/L	1	0.90	5.0	100	EPA 8260B	01/16/08 18:23	jkg	
Acrylonitrile [107-13-1] *	2.0	U	ug/L	1	2.0	5.0	200	EPA 8260B	01/16/08 18:23	jkg	
Benzene [71-43-2] *	0.12	U	ug/L	1	0.12	1.0	1	EPA 8260B	01/16/08 18:23	jkg	
Bromochloromethane [74-97-5] *	0.19	U	ug/L	1	0.19	1.0	3	EPA 8260B	01/16/08 18:23	jkg	
Bromodichloromethane [75-27-4] *	0.19	U	ug/L	1	0.19	0.40	1	EPA 8260B	01/16/08 18:23	jkg	
Bromoform [75-25-2] *	0.36	U	ug/L	1	0.36	1.0	3	EPA 8260B	01/16/08 18:23	jkg	
Bromomethane [74-83-9] *	0.21	U	ug/L	1	0.21	1.0	10	EPA 8260B	01/16/08 18:23	jkg	
Carbon disulfide [75-15-0] *	0.12	U	ug/L	1	0.12	5.0	100	EPA 8260B	01/16/08 18:23	jkg	
Carbon tetrachloride [56-23-5] *	0.38	U	ug/L	1	0.38	1.0	1	EPA 8260B	01/16/08 18:23	jkg	
Chlorobenzene [108-90-7] *	0.16	U	ug/L	1	0.16	1.0	3	EPA 8260B	01/16/08 18:23	jkg	
Chloroethane [75-00-3] *	0.40	U	ug/L	1	0.40	1.0	10	EPA 8260B	01/16/08 18:23	jkg	
Chloroform [67-66-3] *	**0.62**	J	ug/L	1	0.16	1.0	5	EPA 8260B	01/16/08 18:23	jkg	
Chloromethane [74-87-3] *	0.18	U	ug/L	1	0.18	1.0	1	EPA 8260B	01/16/08 18:23	jkg	
cis-1,2-Dichloroethene [156-59-2] *	0.14	U	ug/L	1	0.14	1.0	5	EPA 8260B	01/16/08 18:23	jkg	
cis-1,3-Dichloropropene [10061-01-5] *	0.16	U	ug/L	1	0.16	0.20	1	EPA 8260B	01/16/08 18:23	jkg	
Dibromochloromethane [124-48-1] *	0.18	U	ug/L	1	0.18	1.0	3	EPA 8260B	01/16/08 18:23	jkg	
Dibromomethane [74-95-3] *	0.14	U	ug/L	1	0.14	1.0	10	EPA 8260B	01/16/08 18:23	jkg	
Ethylbenzene [100-41-4] *	0.17	U	ug/L	1	0.17	1.0	1	EPA 8260B	01/16/08 18:23	jkg	
Iodomethane [74-88-4] *	0.23	U	ug/L	1	0.23	2.0	10	EPA 8260B	01/16/08 18:23	jkg	
Methylene chloride [75-09-2] *	0.088	U	ug/L	1	0.088	1.0	1	EPA 8260B	01/16/08 18:23	jkg	
Styrene [100-42-5] *	0.12	U	ug/L	1	0.12	1.0	1	EPA 8260B	01/16/08 18:23	jkg	
Tetrachloroethene [127-18-4] *	0.25	U	ug/L	1	0.25	1.0	1	EPA 8260B	01/16/08 18:23	jkg	
Toluene [108-88-3] *	0.15	U	ug/L	1	0.15	1.0	1	EPA 8260B	01/16/08 18:23	jkg	
trans-1,2-Dichloroethene [156-60-5] *	0.10	U	ug/L	1	0.10	1.0	5	EPA 8260B	01/16/08 18:23	jkg	
trans-1,3-Dichloropropene [10061-02-6] *	0.18	U	ug/L	1	0.18	0.20	1	EPA 8260B	01/16/08 18:23	jkg	
trans-1,4-Dichloro-2-butene [110-57-6] *	0.60	U	ug/L	1	0.60	1.0	100	EPA 8260B	01/16/08 18:23	jkg	
Trichloroethene [79-01-6] *	0.23	U	ug/L	1	0.23	1.0	1	EPA 8260B	01/16/08 18:23	jkg	
Trichlorofluoromethane [75-69-4] *	0.16	U	ug/L	1	0.16	1.0	1	EPA 8260B	01/16/08 18:23	jkg	
Vinyl acetate [108-05-4] *	0.19	U	ug/L	1	0.19	2.0	50	EPA 8260B	01/16/08 18:23	jkg	
Vinyl chloride [75-01-4] *	0.15	U	ug/L	1	0.15	1.0	1	EPA 8260B	01/16/08 18:23	jkg	

www.encolabs.com

Description:	0803-GW11	**Lab Sample ID:**	C717605-06	**Received:**	01/15/08 17:20
Matrix:	Ground Water	**Sampled:**	01/14/08 16:03	**Work Order:**	C717605
Project:	Republic-East Carolina Landfill	**Sampled By:**	R. Stringfellow/K. Higgs		

Volatile Organic Compounds by GCMS

** - ENCO Cary certified analyte [NC 591]*

Analyte [CAS Number]	Results	Flag	Units	DF	MDL	MRL	NC SWSL	Method	Analyzed	By	Notes
Xylenes (Total) [1330-20-7]	0.21	U	ug/L	1	0.21	1.0	5	EPA 8260B	01/16/08 18:23	jkg	

Surrogates	*Results*	*DF*	*Spike Lvl*	*% Rec*	*% Rec Limits*	*Batch*	*Method*	*Analyzed*	*By*	Notes
4-Bromofluorobenzene	*45*	*1*	*50.0*	*91 %*	*69-120*	*8A16004*	*EPA 8260B*	*01/16/08 18:23*	*jkg*	
Dibromofluoromethane	*52*	*1*	*50.0*	*104 %*	*61-120*	*8A16004*	*EPA 8260B*	*01/16/08 18:23*	*jkg*	
Toluene-d8	*42*	*1*	*50.0*	*85 %*	*75-99*	*8A16004*	*EPA 8260B*	*01/16/08 18:23*	*jkg*	

www.encolabs.com

Description: 0803-GW11
Matrix: Ground Water
Project: Republic-East Carolina Landfill

Lab Sample ID: C717605-06
Sampled: 01/14/08 16:03
Sampled By: R. Stringfellow/K. Higgs

Received: 01/15/08 17:20
Work Order: C717605

Metals by EPA 6000/7000 Series Methods

** - ENCO Cary certified analyte [NC 591]*

Analyte [CAS Number]	Results	Flag	Units	DF	MDL	MRL	NC SWSL	Method	Analyzed	By	Notes
Antimony [7440-36-0] *	0.68	U	ug/L	1	0.68	2.00	6	EPA 6020	01/18/08 10:51	JDH	
Arsenic [7440-38-2] *	**2.3**	J	ug/L	1	2.0	10.0	10	EPA 6010B	01/24/08 11:21	VLO	
Barium [7440-39-3] *	**18.5**	J	ug/L	1	0.20	10.0	100	EPA 6010B	01/24/08 11:21	VLO	
Beryllium [7440-41-7] *	0.70	U	ug/L	1	0.70	1.00	1	EPA 6010B	01/24/08 11:21	VLO	
Cadmium [7440-43-9] *	0.50	U	ug/L	1	0.50	1.00	1	EPA 6010B	01/24/08 11:21	VLO	
Chromium [7440-47-3] *	**5.9**	J	ug/L	1	2.0	10.0	10	EPA 6010B	01/24/08 11:21	VLO	
Cobalt [7440-48-4] *	**2.0**	J	ug/L	1	2.0	10.0	10	EPA 6010B	01/24/08 11:21	VLO	
Copper [7440-50-8] *	**1.00**	J	ug/L	1	0.60	10.0	10	EPA 6010B	01/24/08 11:21	VLO	
Lead [7439-92-1] *	2.0	U	ug/L	1	2.0	10.0	10	EPA 6010B	01/24/08 11:21	VLO	
Nickel [7440-02-0] *	**3.2**	J	ug/L	1	2.0	10.0	50	EPA 6010B	01/24/08 11:21	VLO	
Selenium [7782-49-2] *	2.0	U	ug/L	1	2.0	10.0	10	EPA 6010B	01/24/08 11:21	VLO	
Silver [7440-22-4] *	2.0	U	ug/L	1	2.0	10.0	10	EPA 6010B	01/24/08 11:21	VLO	
Thallium [7440-28-0] *	0.036	U	ug/L	1	0.036	1.00	5.5	EPA 6020	01/18/08 10:51	JDH	
Vanadium [7440-62-2] *	**2.0**	J	ug/L	1	1.0	10.0	25	EPA 6010B	01/24/08 11:21	VLO	
Zinc [7440-66-6] *	**5.2**	J	ug/L	1	1.0	10.0	10	EPA 6010B	01/24/08 11:21	VLO	

This report relates only to the sample as received by the laboratory, and may only be reproduced in full.

www.encolabs.com

Description: 0803-GW13
Matrix: Ground Water
Project: Republic-East Carolina Landfill

Lab Sample ID: C717605-07
Sampled: 01/14/08 15:24
Sampled By: R. Stringfellow/K. Higgs

Received: 01/15/08 17:20
Work Order: C717605

Volatile Organic Compounds by GCMS

** - ENCO Cary certified analyte [NC 591]*

Analyte [CAS Number]	Results	Flag	Units	DF	MDL	MRL	NC SWSL	Method	Analyzed	By	Notes
1,1,1,2-Tetrachloroethane [630-20-6] *	0.16	U	ug/L	1	0.16	1.0	5	EPA 8260B	01/16/08 18:53	jkg	
1,1,1-Trichloroethane [71-55-6] *	0.24	U	ug/L	1	0.24	1.0	1	EPA 8260B	01/16/08 18:53	jkg	
1,1,2,2-Tetrachloroethane [79-34-5] *	0.27	U	ug/L	1	0.27	1.0	3	EPA 8260B	01/16/08 18:53	jkg	
1,1,2-Trichloroethane [79-00-5] *	0.24	U	ug/L	1	0.24	1.0	1	EPA 8260B	01/16/08 18:53	jkg	
1,1-Dichloroethane [75-34-3] *	0.090	U	ug/L	1	0.090	1.0	5	EPA 8260B	01/16/08 18:53	jkg	
1,1-Dichloroethene [75-35-4] *	0.14	U	ug/L	1	0.14	1.0	5	EPA 8260B	01/16/08 18:53	jkg	
1,2,3-Trichloropropane [96-18-4] *	0.32	U	ug/L	1	0.32	1.0	1	EPA 8260B	01/16/08 18:53	jkg	
1,2-Dibromo-3-chloropropane [96-12-8] *	0.19	U	ug/L	1	0.19	1.0	13	EPA 8260B	01/16/08 18:53	jkg	
1,2-Dibromoethane [106-93-4] *	0.19	U	ug/L	1	0.19	1.0	1	EPA 8260B	01/16/08 18:53	jkg	
1,2-Dichlorobenzene [95-50-1] *	0.17	U	ug/L	1	0.17	1.0	5	EPA 8260B	01/16/08 18:53	jkg	
1,2-Dichloroethane [107-06-2] *	0.36	U	ug/L	1	0.36	1.0	1	EPA 8260B	01/16/08 18:53	jkg	
1,2-Dichloropropane [78-87-5] *	0.18	U	ug/L	1	0.18	1.0	1	EPA 8260B	01/16/08 18:53	jkg	
1,4-Dichlorobenzene [106-46-7] *	0.15	U	ug/L	1	0.15	1.0	1	EPA 8260B	01/16/08 18:53	jkg	
2-Butanone [78-93-3] *	0.56	U	ug/L	1	0.56	5.0	100	EPA 8260B	01/16/08 18:53	jkg	
2-Hexanone [591-78-6] *	0.24	U	ug/L	1	0.24	5.0	50	EPA 8260B	01/16/08 18:53	jkg	
4-Methyl-2-pentanone [108-10-1] *	0.36	U	ug/L	1	0.36	5.0	100	EPA 8260B	01/16/08 18:53	jkg	
Acetone [67-64-1] *	0.90	U	ug/L	1	0.90	5.0	100	EPA 8260B	01/16/08 18:53	jkg	
Acrylonitrile [107-13-1] *	2.0	U	ug/L	1	2.0	5.0	200	EPA 8260B	01/16/08 18:53	jkg	
Benzene [71-43-2] *	0.12	U	ug/L	1	0.12	1.0	1	EPA 8260B	01/16/08 18:53	jkg	
Bromochloromethane [74-97-5] *	0.19	U	ug/L	1	0.19	1.0	3	EPA 8260B	01/16/08 18:53	jkg	
Bromodichloromethane [75-27-4] *	0.19	U	ug/L	1	0.19	0.40	1	EPA 8260B	01/16/08 18:53	jkg	
Bromoform [75-25-2] *	0.36	U	ug/L	1	0.36	1.0	3	EPA 8260B	01/16/08 18:53	jkg	
Bromomethane [74-83-9] *	0.21	U	ug/L	1	0.21	1.0	10	EPA 8260B	01/16/08 18:53	jkg	
Carbon disulfide [75-15-0] *	0.12	U	ug/L	1	0.12	5.0	100	EPA 8260B	01/16/08 18:53	jkg	
Carbon tetrachloride [56-23-5] *	0.38	U	ug/L	1	0.38	1.0	1	EPA 8260B	01/16/08 18:53	jkg	
Chlorobenzene [108-90-7] *	0.16	U	ug/L	1	0.16	1.0	3	EPA 8260B	01/16/08 18:53	jkg	
Chloroethane [75-00-3] *	0.40	U	ug/L	1	0.40	1.0	10	EPA 8260B	01/16/08 18:53	jkg	
Chloroform [67-66-3] *	0.16	U	ug/L	1	0.16	1.0	5	EPA 8260B	01/16/08 18:53	jkg	
Chloromethane [74-87-3] *	0.18	U	ug/L	1	0.18	1.0	1	EPA 8260B	01/16/08 18:53	jkg	
cis-1,2-Dichloroethene [156-59-2] *	0.14	U	ug/L	1	0.14	1.0	5	EPA 8260B	01/16/08 18:53	jkg	
cis-1,3-Dichloropropene [10061-01-5] *	0.16	U	ug/L	1	0.16	0.20	1	EPA 8260B	01/16/08 18:53	jkg	
Dibromochloromethane [124-48-1] *	0.18	U	ug/L	1	0.18	1.0	3	EPA 8260B	01/16/08 18:53	jkg	
Dibromomethane [74-95-3] *	0.14	U	ug/L	1	0.14	1.0	10	EPA 8260B	01/16/08 18:53	jkg	
Ethylbenzene [100-41-4] *	0.17	U	ug/L	1	0.17	1.0	1	EPA 8260B	01/16/08 18:53	jkg	
Iodomethane [74-88-4] *	0.23	U	ug/L	1	0.23	2.0	10	EPA 8260B	01/16/08 18:53	jkg	
Methylene chloride [75-09-2] *	0.088	U	ug/L	1	0.088	1.0	1	EPA 8260B	01/16/08 18:53	jkg	
Styrene [100-42-5] *	0.12	U	ug/L	1	0.12	1.0	1	EPA 8260B	01/16/08 18:53	jkg	
Tetrachloroethene [127-18-4] *	0.25	U	ug/L	1	0.25	1.0	1	EPA 8260B	01/16/08 18:53	jkg	
Toluene [108-88-3] *	0.15	U	ug/L	1	0.15	1.0	1	EPA 8260B	01/16/08 18:53	jkg	
trans-1,2-Dichloroethene [156-60-5] *	0.10	U	ug/L	1	0.10	1.0	5	EPA 8260B	01/16/08 18:53	jkg	
trans-1,3-Dichloropropene [10061-02-6] *	0.18	U	ug/L	1	0.18	0.20	1	EPA 8260B	01/16/08 18:53	jkg	
trans-1,4-Dichloro-2-butene [110-57-6] *	0.60	U	ug/L	1	0.60	1.0	100	EPA 8260B	01/16/08 18:53	jkg	
Trichloroethene [79-01-6] *	0.23	U	ug/L	1	0.23	1.0	1	EPA 8260B	01/16/08 18:53	jkg	
Trichlorofluoromethane [75-69-4] *	0.16	U	ug/L	1	0.16	1.0	1	EPA 8260B	01/16/08 18:53	jkg	
Vinyl acetate [108-05-4] *	0.19	U	ug/L	1	0.19	2.0	50	EPA 8260B	01/16/08 18:53	jkg	
Vinyl chloride [75-01-4] *	0.15	U	ug/L	1	0.15	1.0	1	EPA 8260B	01/16/08 18:53	jkg	

www.encolabs.com

Description:	0803-GW13	**Lab Sample ID:**	C717605-07	**Received:**	01/15/08 17:20
Matrix:	Ground Water	**Sampled:**	01/14/08 15:24	**Work Order:**	C717605
Project:	Republic-East Carolina Landfill	**Sampled By:**	R. Stringfellow/K. Higgs		

Volatile Organic Compounds by GCMS

** - ENCO Cary certified analyte [NC 591]*

Analyte [CAS Number]	Results	Flag	Units	DF	MDL	MRL	NC SWSL	Method	Analyzed	By	Notes
Xylenes (Total) [1330-20-7]	0.21	U	ug/L	1	0.21	1.0	5	EPA 8260B	01/16/08 18:53	jkg	

Surrogates	*Results*	*DF*	*Spike Lvl*	*% Rec*	*% Rec Limits*	*Batch*	*Method*	*Analyzed*	*By*	Notes
4-Bromofluorobenzene	*43*	*1*	*50.0*	*87 %*	*69-120*	*8A16004*	*EPA 8260B*	*01/16/08 18:53*	*jkg*	
Dibromofluoromethane	*50*	*1*	*50.0*	*101 %*	*61-120*	*8A16004*	*EPA 8260B*	*01/16/08 18:53*	*jkg*	
Toluene-d8	*42*	*1*	*50.0*	*83 %*	*75-99*	*8A16004*	*EPA 8260B*	*01/16/08 18:53*	*jkg*	

www.encolabs.com

Description: 0803-GW13
Matrix: Ground Water
Project: Republic-East Carolina Landfill

Lab Sample ID: C717605-07
Sampled: 01/14/08 15:24
Sampled By: R. Stringfellow/K. Higgs

Received: 01/15/08 17:20
Work Order: C717605

Metals by EPA 6000/7000 Series Methods

** - ENCO Cary certified analyte [NC 591]*

Analyte [CAS Number]	Results	Flag	Units	DF	MDL	MRL	NC SWSL	Method	Analyzed	By	Notes
Antimony [7440-36-0] *	0.68	U	ug/L	1	0.68	2.00	6	EPA 6020	01/18/08 10:59	JDH	
Arsenic [7440-38-2] *	2.0	U	ug/L	1	2.0	10.0	10	EPA 6010B	01/24/08 11:46	VLO	
Barium [7440-39-3] *	**291**		ug/L	1	0.20	10.0	100	EPA 6010B	01/24/08 11:46	VLO	
Beryllium [7440-41-7] *	0.70	U	ug/L	1	0.70	1.00	1	EPA 6010B	01/24/08 11:46	VLO	
Cadmium [7440-43-9] *	0.50	U	ug/L	1	0.50	1.00	1	EPA 6010B	01/24/08 11:46	VLO	
Chromium [7440-47-3] *	**3.8**	J	ug/L	1	2.0	10.0	10	EPA 6010B	01/24/08 11:46	VLO	
Cobalt [7440-48-4] *	**3.3**	J	ug/L	1	2.0	10.0	10	EPA 6010B	01/24/08 11:46	VLO	
Copper [7440-50-8] *	**0.80**	J	ug/L	1	0.60	10.0	10	EPA 6010B	01/24/08 11:46	VLO	
Lead [7439-92-1] *	2.0	U	ug/L	1	2.0	10.0	10	EPA 6010B	01/24/08 11:46	VLO	
Nickel [7440-02-0] *	**4.7**	J	ug/L	1	2.0	10.0	50	EPA 6010B	01/24/08 11:46	VLO	
Selenium [7782-49-2] *	2.0	U	ug/L	1	2.0	10.0	10	EPA 6010B	01/24/08 11:46	VLO	
Silver [7440-22-4] *	2.0	U	ug/L	1	2.0	10.0	10	EPA 6010B	01/24/08 11:46	VLO	
Thallium [7440-28-0] *	**0.063**	J	ug/L	1	0.036	1.00	5.5	EPA 6020	01/18/08 10:59	JDH	
Vanadium [7440-62-2] *	1.0	U	ug/L	1	1.0	10.0	25	EPA 6010B	01/24/08 11:46	VLO	
Zinc [7440-66-6] *	**4.8**	J	ug/L	1	1.0	10.0	10	EPA 6010B	01/24/08 11:46	VLO	

This report relates only to the sample as received by the laboratory, and may only be reproduced in full.

www.encolabs.com

Description: 0803-GW14
Matrix: Ground Water
Project: Republic-East Carolina Landfill

Lab Sample ID: C717605-08
Sampled: 01/14/08 13:11
Sampled By: R. Stringfellow/K. Higgs

Received: 01/15/08 17:20
Work Order: C717605

Volatile Organic Compounds by GCMS

** - ENCO Cary certified analyte [NC 591]*

Analyte [CAS Number]	Results	Flag	Units	DF	MDL	MRL	NC SWSL	Method	Analyzed	By	Notes
1,1,1,2-Tetrachloroethane [630-20-6] *	0.16	U	ug/L	1	0.16	1.0	5	EPA 8260B	01/16/08 19:22	jkg	
1,1,1-Trichloroethane [71-55-6] *	0.24	U	ug/L	1	0.24	1.0	1	EPA 8260B	01/16/08 19:22	jkg	
1,1,2,2-Tetrachloroethane [79-34-5] *	0.27	U	ug/L	1	0.27	1.0	3	EPA 8260B	01/16/08 19:22	jkg	
1,1,2-Trichloroethane [79-00-5] *	0.24	U	ug/L	1	0.24	1.0	1	EPA 8260B	01/16/08 19:22	jkg	
1,1-Dichloroethane [75-34-3] *	0.090	U	ug/L	1	0.090	1.0	5	EPA 8260B	01/16/08 19:22	jkg	
1,1-Dichloroethene [75-35-4] *	0.14	U	ug/L	1	0.14	1.0	5	EPA 8260B	01/16/08 19:22	jkg	
1,2,3-Trichloropropane [96-18-4] *	0.32	U	ug/L	1	0.32	1.0	1	EPA 8260B	01/16/08 19:22	jkg	
1,2-Dibromo-3-chloropropane [96-12-8] *	0.19	U	ug/L	1	0.19	1.0	13	EPA 8260B	01/16/08 19:22	jkg	
1,2-Dibromoethane [106-93-4] *	0.19	U	ug/L	1	0.19	1.0	1	EPA 8260B	01/16/08 19:22	jkg	
1,2-Dichlorobenzene [95-50-1] *	0.17	U	ug/L	1	0.17	1.0	5	EPA 8260B	01/16/08 19:22	jkg	
1,2-Dichloroethane [107-06-2] *	0.36	U	ug/L	1	0.36	1.0	1	EPA 8260B	01/16/08 19:22	jkg	
1,2-Dichloropropane [78-87-5] *	0.18	U	ug/L	1	0.18	1.0	1	EPA 8260B	01/16/08 19:22	jkg	
1,4-Dichlorobenzene [106-46-7] *	0.15	U	ug/L	1	0.15	1.0	1	EPA 8260B	01/16/08 19:22	jkg	
2-Butanone [78-93-3] *	0.56	U	ug/L	1	0.56	5.0	100	EPA 8260B	01/16/08 19:22	jkg	
2-Hexanone [591-78-6] *	0.24	U	ug/L	1	0.24	5.0	50	EPA 8260B	01/16/08 19:22	jkg	
4-Methyl-2-pentanone [108-10-1] *	0.36	U	ug/L	1	0.36	5.0	100	EPA 8260B	01/16/08 19:22	jkg	
Acetone [67-64-1] *	0.90	U	ug/L	1	0.90	5.0	100	EPA 8260B	01/16/08 19:22	jkg	
Acrylonitrile [107-13-1] *	2.0	U	ug/L	1	2.0	5.0	200	EPA 8260B	01/16/08 19:22	jkg	
Benzene [71-43-2] *	0.12	U	ug/L	1	0.12	1.0	1	EPA 8260B	01/16/08 19:22	jkg	
Bromochloromethane [74-97-5] *	0.19	U	ug/L	1	0.19	1.0	3	EPA 8260B	01/16/08 19:22	jkg	
Bromodichloromethane [75-27-4] *	0.19	U	ug/L	1	0.19	0.40	1	EPA 8260B	01/16/08 19:22	jkg	
Bromoform [75-25-2] *	0.36	U	ug/L	1	0.36	1.0	3	EPA 8260B	01/16/08 19:22	jkg	
Bromomethane [74-83-9] *	0.21	U	ug/L	1	0.21	1.0	10	EPA 8260B	01/16/08 19:22	jkg	
Carbon disulfide [75-15-0] *	0.12	U	ug/L	1	0.12	5.0	100	EPA 8260B	01/16/08 19:22	jkg	
Carbon tetrachloride [56-23-5] *	0.38	U	ug/L	1	0.38	1.0	1	EPA 8260B	01/16/08 19:22	jkg	
Chlorobenzene [108-90-7] *	0.16	U	ug/L	1	0.16	1.0	3	EPA 8260B	01/16/08 19:22	jkg	
Chloroethane [75-00-3] *	0.40	U	ug/L	1	0.40	1.0	10	EPA 8260B	01/16/08 19:22	jkg	
Chloroform [67-66-3] *	0.16	U	ug/L	1	0.16	1.0	5	EPA 8260B	01/16/08 19:22	jkg	
Chloromethane [74-87-3] *	0.18	U	ug/L	1	0.18	1.0	1	EPA 8260B	01/16/08 19:22	jkg	
cis-1,2-Dichloroethene [156-59-2] *	0.14	U	ug/L	1	0.14	1.0	5	EPA 8260B	01/16/08 19:22	jkg	
cis-1,3-Dichloropropene [10061-01-5] *	0.16	U	ug/L	1	0.16	0.20	1	EPA 8260B	01/16/08 19:22	jkg	
Dibromochloromethane [124-48-1] *	0.18	U	ug/L	1	0.18	1.0	3	EPA 8260B	01/16/08 19:22	jkg	
Dibromomethane [74-95-3] *	0.14	U	ug/L	1	0.14	1.0	10	EPA 8260B	01/16/08 19:22	jkg	
Ethylbenzene [100-41-4] *	0.17	U	ug/L	1	0.17	1.0	1	EPA 8260B	01/16/08 19:22	jkg	
Iodomethane [74-88-4] *	0.23	U	ug/L	1	0.23	2.0	10	EPA 8260B	01/16/08 19:22	jkg	
Methylene chloride [75-09-2] *	0.088	U	ug/L	1	0.088	1.0	1	EPA 8260B	01/16/08 19:22	jkg	
Styrene [100-42-5] *	0.12	U	ug/L	1	0.12	1.0	1	EPA 8260B	01/16/08 19:22	jkg	
Tetrachloroethene [127-18-4] *	0.25	U	ug/L	1	0.25	1.0	1	EPA 8260B	01/16/08 19:22	jkg	
Toluene [108-88-3] *	0.15	U	ug/L	1	0.15	1.0	1	EPA 8260B	01/16/08 19:22	jkg	
trans-1,2-Dichloroethene [156-60-5] *	0.10	U	ug/L	1	0.10	1.0	5	EPA 8260B	01/16/08 19:22	jkg	
trans-1,3-Dichloropropene [10061-02-6] *	0.18	U	ug/L	1	0.18	0.20	1	EPA 8260B	01/16/08 19:22	jkg	
trans-1,4-Dichloro-2-butene [110-57-6] *	0.60	U	ug/L	1	0.60	1.0	100	EPA 8260B	01/16/08 19:22	jkg	
Trichloroethene [79-01-6] *	0.23	U	ug/L	1	0.23	1.0	1	EPA 8260B	01/16/08 19:22	jkg	
Trichlorofluoromethane [75-69-4] *	0.16	U	ug/L	1	0.16	1.0	1	EPA 8260B	01/16/08 19:22	jkg	
Vinyl acetate [108-05-4] *	0.19	U	ug/L	1	0.19	2.0	50	EPA 8260B	01/16/08 19:22	jkg	
Vinyl chloride [75-01-4] *	0.15	U	ug/L	1	0.15	1.0	1	EPA 8260B	01/16/08 19:22	jkg	

www.encolabs.com

Description:	0803-GW14	**Lab Sample ID:**	C717605-08	**Received:**	01/15/08 17:20
Matrix:	Ground Water	**Sampled:**	01/14/08 13:11	**Work Order:**	C717605
Project:	Republic-East Carolina Landfill	**Sampled By:**	R. Stringfellow/K. Higgs		

Volatile Organic Compounds by GCMS

** - ENCO Cary certified analyte [NC 591]*

Analyte [CAS Number]	Results	Flag	Units	DF	MDL	MRL	NC SWSL	Method	Analyzed	By	Notes
Xylenes (Total) [1330-20-7]	0.21	U	ug/L	1	0.21	1.0	5	EPA 8260B	01/16/08 19:22	jkg	

Surrogates	*Results*	*DF*	*Spike Lvl*	*% Rec*	*% Rec Limits*	*Batch*	*Method*	*Analyzed*	*By*	Notes
4-Bromofluorobenzene	*44*	*1*	*50.0*	*88 %*	*69-120*	*8A16004*	*EPA 8260B*	*01/16/08 19:22*	*jkg*	
Dibromofluoromethane	*50*	*1*	*50.0*	*99 %*	*61-120*	*8A16004*	*EPA 8260B*	*01/16/08 19:22*	*jkg*	
Toluene-d8	*43*	*1*	*50.0*	*86 %*	*75-99*	*8A16004*	*EPA 8260B*	*01/16/08 19:22*	*jkg*	

www.encolabs.com

Description: 0803-GW14
Matrix: Ground Water
Project: Republic-East Carolina Landfill

Lab Sample ID: C717605-08
Sampled: 01/14/08 13:11
Sampled By: R. Stringfellow/K. Higgs

Received: 01/15/08 17:20
Work Order: C717605

Metals by EPA 6000/7000 Series Methods

** - ENCO Cary certified analyte [NC 591]*

Analyte [CAS Number]	Results	Flag	Units	DF	MDL	MRL	NC SWSL	Method	Analyzed	By	Notes
Antimony [7440-36-0] *	0.68	U	ug/L	1	0.68	2.00	6	EPA 6020	01/18/08 11:02	JDH	
Arsenic [7440-38-2] *	2.0	U	ug/L	1	2.0	10.0	10	EPA 6010B	01/24/08 11:53	VLO	
Barium [7440-39-3] *	**37.1**	J	ug/L	1	0.20	10.0	100	EPA 6010B	01/24/08 11:53	VLO	
Beryllium [7440-41-7] *	0.70	U	ug/L	1	0.70	1.00	1	EPA 6010B	01/24/08 11:53	VLO	
Cadmium [7440-43-9] *	0.50	U	ug/L	1	0.50	1.00	1	EPA 6010B	01/24/08 11:53	VLO	
Chromium [7440-47-3] *	2.0	U	ug/L	1	2.0	10.0	10	EPA 6010B	01/24/08 11:53	VLO	
Cobalt [7440-48-4] *	**5.7**	J	ug/L	1	2.0	10.0	10	EPA 6010B	01/24/08 11:53	VLO	
Copper [7440-50-8] *	0.60	U	ug/L	1	0.60	10.0	10	EPA 6010B	01/24/08 11:53	VLO	
Lead [7439-92-1] *	2.0	U	ug/L	1	2.0	10.0	10	EPA 6010B	01/24/08 11:53	VLO	
Nickel [7440-02-0] *	**3.6**	J	ug/L	1	2.0	10.0	50	EPA 6010B	01/24/08 11:53	VLO	
Selenium [7782-49-2] *	2.0	U	ug/L	1	2.0	10.0	10	EPA 6010B	01/24/08 11:53	VLO	
Silver [7440-22-4] *	2.0	U	ug/L	1	2.0	10.0	10	EPA 6010B	01/24/08 11:53	VLO	
Thallium [7440-28-0] *	0.036	U	ug/L	1	0.036	1.00	5.5	EPA 6020	01/18/08 11:02	JDH	
Vanadium [7440-62-2] *	**1.2**	J	ug/L	1	1.0	10.0	25	EPA 6010B	01/24/08 11:53	VLO	
Zinc [7440-66-6] *	**5.9**	J	ug/L	1	1.0	10.0	10	EPA 6010B	01/24/08 11:53	VLO	

This report relates only to the sample as received by the laboratory, and may only be reproduced in full.

www.encolabs.com

Description: 0803-GW15
Matrix: Ground Water
Project: Republic-East Carolina Landfill

Lab Sample ID: C717605-09
Sampled: 01/14/08 14:49
Sampled By: R. Stringfellow/K. Higgs

Received: 01/15/08 17:20
Work Order: C717605

Volatile Organic Compounds by GCMS

** - ENCO Cary certified analyte [NC 591]*

Analyte [CAS Number]	Results	Flag	Units	DF	MDL	MRL	NC SWSL	Method	Analyzed	By	Notes
1,1,1,2-Tetrachloroethane [630-20-6] *	0.16	U	ug/L	1	0.16	1.0	5	EPA 8260B	01/17/08 04:06	jkg	
1,1,1-Trichloroethane [71-55-6] *	0.24	U	ug/L	1	0.24	1.0	1	EPA 8260B	01/17/08 04:06	jkg	
1,1,2,2-Tetrachloroethane [79-34-5] *	0.27	U	ug/L	1	0.27	1.0	3	EPA 8260B	01/17/08 04:06	jkg	
1,1,2-Trichloroethane [79-00-5] *	0.24	U	ug/L	1	0.24	1.0	1	EPA 8260B	01/17/08 04:06	jkg	
1,1-Dichloroethane [75-34-3] *	0.090	U	ug/L	1	0.090	1.0	5	EPA 8260B	01/17/08 04:06	jkg	
1,1-Dichloroethene [75-35-4] *	0.14	U	ug/L	1	0.14	1.0	5	EPA 8260B	01/17/08 04:06	jkg	
1,2,3-Trichloropropane [96-18-4] *	0.32	U	ug/L	1	0.32	1.0	1	EPA 8260B	01/17/08 04:06	jkg	
1,2-Dibromo-3-chloropropane [96-12-8] *	0.19	U	ug/L	1	0.19	1.0	13	EPA 8260B	01/17/08 04:06	jkg	
1,2-Dibromoethane [106-93-4] *	0.19	U	ug/L	1	0.19	1.0	1	EPA 8260B	01/17/08 04:06	jkg	
1,2-Dichlorobenzene [95-50-1] *	0.17	U	ug/L	1	0.17	1.0	5	EPA 8260B	01/17/08 04:06	jkg	
1,2-Dichloroethane [107-06-2] *	0.36	U	ug/L	1	0.36	1.0	1	EPA 8260B	01/17/08 04:06	jkg	
1,2-Dichloropropane [78-87-5] *	0.18	U	ug/L	1	0.18	1.0	1	EPA 8260B	01/17/08 04:06	jkg	
1,4-Dichlorobenzene [106-46-7] *	0.15	U	ug/L	1	0.15	1.0	1	EPA 8260B	01/17/08 04:06	jkg	
2-Butanone [78-93-3] *	0.56	U	ug/L	1	0.56	5.0	100	EPA 8260B	01/17/08 04:06	jkg	
2-Hexanone [591-78-6] *	0.24	U	ug/L	1	0.24	5.0	50	EPA 8260B	01/17/08 04:06	jkg	
4-Methyl-2-pentanone [108-10-1] *	0.36	U	ug/L	1	0.36	5.0	100	EPA 8260B	01/17/08 04:06	jkg	
Acetone [67-64-1] *	0.90	U	ug/L	1	0.90	5.0	100	EPA 8260B	01/17/08 04:06	jkg	
Acrylonitrile [107-13-1] *	2.0	U	ug/L	1	2.0	5.0	200	EPA 8260B	01/17/08 04:06	jkg	
Benzene [71-43-2] *	0.12	U	ug/L	1	0.12	1.0	1	EPA 8260B	01/17/08 04:06	jkg	
Bromochloromethane [74-97-5] *	0.19	U	ug/L	1	0.19	1.0	3	EPA 8260B	01/17/08 04:06	jkg	
Bromodichloromethane [75-27-4] *	0.19	U	ug/L	1	0.19	0.40	1	EPA 8260B	01/17/08 04:06	jkg	
Bromoform [75-25-2] *	0.36	U	ug/L	1	0.36	1.0	3	EPA 8260B	01/17/08 04:06	jkg	
Bromomethane [74-83-9] *	0.21	U	ug/L	1	0.21	1.0	10	EPA 8260B	01/17/08 04:06	jkg	
Carbon disulfide [75-15-0] *	0.12	U	ug/L	1	0.12	5.0	100	EPA 8260B	01/17/08 04:06	jkg	
Carbon tetrachloride [56-23-5] *	0.38	U	ug/L	1	0.38	1.0	1	EPA 8260B	01/17/08 04:06	jkg	
Chlorobenzene [108-90-7] *	0.16	U	ug/L	1	0.16	1.0	3	EPA 8260B	01/17/08 04:06	jkg	
Chloroethane [75-00-3] *	0.40	U	ug/L	1	0.40	1.0	10	EPA 8260B	01/17/08 04:06	jkg	
Chloroform [67-66-3] *	0.16	U	ug/L	1	0.16	1.0	5	EPA 8260B	01/17/08 04:06	jkg	
Chloromethane [74-87-3] *	0.18	U	ug/L	1	0.18	1.0	1	EPA 8260B	01/17/08 04:06	jkg	
cis-1,2-Dichloroethene [156-59-2] *	0.14	U	ug/L	1	0.14	1.0	5	EPA 8260B	01/17/08 04:06	jkg	
cis-1,3-Dichloropropene [10061-01-5] *	0.16	U	ug/L	1	0.16	0.20	1	EPA 8260B	01/17/08 04:06	jkg	
Dibromochloromethane [124-48-1] *	0.18	U	ug/L	1	0.18	1.0	3	EPA 8260B	01/17/08 04:06	jkg	
Dibromomethane [74-95-3] *	0.14	U	ug/L	1	0.14	1.0	10	EPA 8260B	01/17/08 04:06	jkg	
Ethylbenzene [100-41-4] *	0.17	U	ug/L	1	0.17	1.0	1	EPA 8260B	01/17/08 04:06	jkg	
Iodomethane [74-88-4] *	0.23	U	ug/L	1	0.23	2.0	10	EPA 8260B	01/17/08 04:06	jkg	
Methylene chloride [75-09-2] *	0.088	U	ug/L	1	0.088	1.0	1	EPA 8260B	01/17/08 04:06	jkg	
Styrene [100-42-5] *	0.12	U	ug/L	1	0.12	1.0	1	EPA 8260B	01/17/08 04:06	jkg	
Tetrachloroethene [127-18-4] *	0.25	U	ug/L	1	0.25	1.0	1	EPA 8260B	01/17/08 04:06	jkg	
Toluene [108-88-3] *	0.15	U	ug/L	1	0.15	1.0	1	EPA 8260B	01/17/08 04:06	jkg	
trans-1,2-Dichloroethene [156-60-5] *	0.10	U	ug/L	1	0.10	1.0	5	EPA 8260B	01/17/08 04:06	jkg	
trans-1,3-Dichloropropene [10061-02-6] *	0.18	U	ug/L	1	0.18	0.20	1	EPA 8260B	01/17/08 04:06	jkg	
trans-1,4-Dichloro-2-butene [110-57-6] *	0.60	U	ug/L	1	0.60	1.0	100	EPA 8260B	01/17/08 04:06	jkg	
Trichloroethene [79-01-6] *	0.23	U	ug/L	1	0.23	1.0	1	EPA 8260B	01/17/08 04:06	jkg	
Trichlorofluoromethane [75-69-4] *	0.16	U	ug/L	1	0.16	1.0	1	EPA 8260B	01/17/08 04:06	jkg	
Vinyl acetate [108-05-4] *	0.19	U	ug/L	1	0.19	2.0	50	EPA 8260B	01/17/08 04:06	jkg	
Vinyl chloride [75-01-4] *	0.15	U	ug/L	1	0.15	1.0	1	EPA 8260B	01/17/08 04:06	jkg	

www.encolabs.com

Description:	0803-GW15	**Lab Sample ID:**	C717605-09	**Received:**	01/15/08 17:20
Matrix:	Ground Water	**Sampled:**	01/14/08 14:49	**Work Order:**	C717605
Project:	Republic-East Carolina Landfill	**Sampled By:**	R. Stringfellow/K. Higgs		

Volatile Organic Compounds by GCMS

** - ENCO Cary certified analyte [NC 591]*

Analyte [CAS Number]	Results	Flag	Units	DF	MDL	MRL	NC SWSL	Method	Analyzed	By	Notes
Xylenes (Total) [1330-20-7]	0.21	U	ug/L	1	0.21	1.0	5	EPA 8260B	01/17/08 04:06	jkg	

Surrogates	*Results*	*DF*	*Spike Lvl*	*% Rec*	*% Rec Limits*	*Batch*	*Method*	*Analyzed*	*By*	Notes
4-Bromofluorobenzene	*44*	*1*	*50.0*	*89 %*	*69-120*	*8A16018*	*EPA 8260B*	*01/17/08 04:06*	*jkg*	
Dibromofluoromethane	*47*	*1*	*50.0*	*94 %*	*61-120*	*8A16018*	*EPA 8260B*	*01/17/08 04:06*	*jkg*	
Toluene-d8	*42*	*1*	*50.0*	*83 %*	*75-99*	*8A16018*	*EPA 8260B*	*01/17/08 04:06*	*jkg*	

www.encolabs.com

Description: 0803-GW15
Matrix: Ground Water
Project: Republic-East Carolina Landfill

Lab Sample ID: C717605-09
Sampled: 01/14/08 14:49
Sampled By: R. Stringfellow/K. Higgs

Received: 01/15/08 17:20
Work Order: C717605

Metals by EPA 6000/7000 Series Methods

** - ENCO Cary certified analyte [NC 591]*

Analyte [CAS Number]	Results	Flag	Units	DF	MDL	MRL	NC SWSL	Method	Analyzed	By	Notes
Antimony [7440-36-0] *	0.68	U	ug/L	1	0.68	2.00	6	EPA 6020	01/18/08 11:05	JDH	
Arsenic [7440-38-2] *	2.0	U	ug/L	1	2.0	10.0	10	EPA 6010B	01/24/08 12:00	VLO	
Barium [7440-39-3] *	**117**		ug/L	1	0.20	10.0	100	EPA 6010B	01/24/08 12:00	VLO	
Beryllium [7440-41-7] *	0.70	U	ug/L	1	0.70	1.00	1	EPA 6010B	01/24/08 12:00	VLO	
Cadmium [7440-43-9] *	0.50	U	ug/L	1	0.50	1.00	1	EPA 6010B	01/24/08 12:00	VLO	
Chromium [7440-47-3] *	2.0	U	ug/L	1	2.0	10.0	10	EPA 6010B	01/24/08 12:00	VLO	
Cobalt [7440-48-4] *	**3.4**	J	ug/L	1	2.0	10.0	10	EPA 6010B	01/24/08 12:00	VLO	
Copper [7440-50-8] *	**0.80**	J	ug/L	1	0.60	10.0	10	EPA 6010B	01/24/08 12:00	VLO	
Lead [7439-92-1] *	2.0	U	ug/L	1	2.0	10.0	10	EPA 6010B	01/24/08 12:00	VLO	
Nickel [7440-02-0] *	**3.8**	J	ug/L	1	2.0	10.0	50	EPA 6010B	01/24/08 12:00	VLO	
Selenium [7782-49-2] *	**2.3**	J	ug/L	1	2.0	10.0	10	EPA 6010B	01/24/08 12:00	VLO	
Silver [7440-22-4] *	**2.1**	J	ug/L	1	2.0	10.0	10	EPA 6010B	01/24/08 12:00	VLO	
Thallium [7440-28-0] *	0.036	U	ug/L	1	0.036	1.00	5.5	EPA 6020	01/18/08 11:05	JDH	
Vanadium [7440-62-2] *	**1.0**	J	ug/L	1	1.0	10.0	25	EPA 6010B	01/24/08 12:00	VLO	
Zinc [7440-66-6] *	**3.7**	J	ug/L	1	1.0	10.0	10	EPA 6010B	01/24/08 12:00	VLO	

This report relates only to the sample as received by the laboratory, and may only be reproduced in full.

www.encolabs.com

Description: 0803-GW16R
Matrix: Ground Water
Project: Republic-East Carolina Landfill

Lab Sample ID: C717605-10
Sampled: 01/15/08 10:49
Sampled By: R. Stringfellow/K. Higgs

Received: 01/15/08 17:20
Work Order: C717605

Volatile Organic Compounds by GCMS

** - ENCO Cary certified analyte [NC 591]*

Analyte [CAS Number]	Results	Flag	Units	DF	MDL	MRL	NC SWSL	Method	Analyzed	By	Notes
1,1,1,2-Tetrachloroethane [630-20-6] *	0.16	U	ug/L	1	0.16	1.0	5	EPA 8260B	01/17/08 04:35	jkg	
1,1,1-Trichloroethane [71-55-6] *	0.24	U	ug/L	1	0.24	1.0	1	EPA 8260B	01/17/08 04:35	jkg	
1,1,2,2-Tetrachloroethane [79-34-5] *	0.27	U	ug/L	1	0.27	1.0	3	EPA 8260B	01/17/08 04:35	jkg	
1,1,2-Trichloroethane [79-00-5] *	0.24	U	ug/L	1	0.24	1.0	1	EPA 8260B	01/17/08 04:35	jkg	
1,1-Dichloroethane [75-34-3] *	0.090	U	ug/L	1	0.090	1.0	5	EPA 8260B	01/17/08 04:35	jkg	
1,1-Dichloroethene [75-35-4] *	0.14	U	ug/L	1	0.14	1.0	5	EPA 8260B	01/17/08 04:35	jkg	
1,2,3-Trichloropropane [96-18-4] *	0.32	U	ug/L	1	0.32	1.0	1	EPA 8260B	01/17/08 04:35	jkg	
1,2-Dibromo-3-chloropropane [96-12-8] *	0.19	U	ug/L	1	0.19	1.0	13	EPA 8260B	01/17/08 04:35	jkg	
1,2-Dibromoethane [106-93-4] *	0.19	U	ug/L	1	0.19	1.0	1	EPA 8260B	01/17/08 04:35	jkg	
1,2-Dichlorobenzene [95-50-1] *	0.17	U	ug/L	1	0.17	1.0	5	EPA 8260B	01/17/08 04:35	jkg	
1,2-Dichloroethane [107-06-2] *	0.36	U	ug/L	1	0.36	1.0	1	EPA 8260B	01/17/08 04:35	jkg	
1,2-Dichloropropane [78-87-5] *	0.18	U	ug/L	1	0.18	1.0	1	EPA 8260B	01/17/08 04:35	jkg	
1,4-Dichlorobenzene [106-46-7] *	0.15	U	ug/L	1	0.15	1.0	1	EPA 8260B	01/17/08 04:35	jkg	
2-Butanone [78-93-3] *	0.56	U	ug/L	1	0.56	5.0	100	EPA 8260B	01/17/08 04:35	jkg	
2-Hexanone [591-78-6] *	0.24	U	ug/L	1	0.24	5.0	50	EPA 8260B	01/17/08 04:35	jkg	
4-Methyl-2-pentanone [108-10-1] *	0.36	U	ug/L	1	0.36	5.0	100	EPA 8260B	01/17/08 04:35	jkg	
Acetone [67-64-1] *	0.90	U	ug/L	1	0.90	5.0	100	EPA 8260B	01/17/08 04:35	jkg	
Acrylonitrile [107-13-1] *	2.0	U	ug/L	1	2.0	5.0	200	EPA 8260B	01/17/08 04:35	jkg	
Benzene [71-43-2] *	0.12	U	ug/L	1	0.12	1.0	1	EPA 8260B	01/17/08 04:35	jkg	
Bromochloromethane [74-97-5] *	0.19	U	ug/L	1	0.19	1.0	3	EPA 8260B	01/17/08 04:35	jkg	
Bromodichloromethane [75-27-4] *	0.19	U	ug/L	1	0.19	0.40	1	EPA 8260B	01/17/08 04:35	jkg	
Bromoform [75-25-2] *	0.36	U	ug/L	1	0.36	1.0	3	EPA 8260B	01/17/08 04:35	jkg	
Bromomethane [74-83-9] *	0.21	U	ug/L	1	0.21	1.0	10	EPA 8260B	01/17/08 04:35	jkg	
Carbon disulfide [75-15-0] *	0.12	U	ug/L	1	0.12	5.0	100	EPA 8260B	01/17/08 04:35	jkg	
Carbon tetrachloride [56-23-5] *	0.38	U	ug/L	1	0.38	1.0	1	EPA 8260B	01/17/08 04:35	jkg	
Chlorobenzene [108-90-7] *	0.16	U	ug/L	1	0.16	1.0	3	EPA 8260B	01/17/08 04:35	jkg	
Chloroethane [75-00-3] *	0.40	U	ug/L	1	0.40	1.0	10	EPA 8260B	01/17/08 04:35	jkg	
Chloroform [67-66-3] *	**0.54**	J	ug/L	1	0.16	1.0	5	EPA 8260B	01/17/08 04:35	jkg	
Chloromethane [74-87-3] *	0.18	U	ug/L	1	0.18	1.0	1	EPA 8260B	01/17/08 04:35	jkg	
cis-1,2-Dichloroethene [156-59-2] *	0.14	U	ug/L	1	0.14	1.0	5	EPA 8260B	01/17/08 04:35	jkg	
cis-1,3-Dichloropropene [10061-01-5] *	0.16	U	ug/L	1	0.16	0.20	1	EPA 8260B	01/17/08 04:35	jkg	
Dibromochloromethane [124-48-1] *	0.18	U	ug/L	1	0.18	1.0	3	EPA 8260B	01/17/08 04:35	jkg	
Dibromomethane [74-95-3] *	0.14	U	ug/L	1	0.14	1.0	10	EPA 8260B	01/17/08 04:35	jkg	
Ethylbenzene [100-41-4] *	0.17	U	ug/L	1	0.17	1.0	1	EPA 8260B	01/17/08 04:35	jkg	
Iodomethane [74-88-4] *	0.23	U	ug/L	1	0.23	2.0	10	EPA 8260B	01/17/08 04:35	jkg	
Methylene chloride [75-09-2] *	0.088	U	ug/L	1	0.088	1.0	1	EPA 8260B	01/17/08 04:35	jkg	
Styrene [100-42-5] *	0.12	U	ug/L	1	0.12	1.0	1	EPA 8260B	01/17/08 04:35	jkg	
Tetrachloroethene [127-18-4] *	0.25	U	ug/L	1	0.25	1.0	1	EPA 8260B	01/17/08 04:35	jkg	
Toluene [108-88-3] *	0.15	U	ug/L	1	0.15	1.0	1	EPA 8260B	01/17/08 04:35	jkg	
trans-1,2-Dichloroethene [156-60-5] *	0.10	U	ug/L	1	0.10	1.0	5	EPA 8260B	01/17/08 04:35	jkg	
trans-1,3-Dichloropropene [10061-02-6] *	0.18	U	ug/L	1	0.18	0.20	1	EPA 8260B	01/17/08 04:35	jkg	
trans-1,4-Dichloro-2-butene [110-57-6] *	0.60	U	ug/L	1	0.60	1.0	100	EPA 8260B	01/17/08 04:35	jkg	
Trichloroethene [79-01-6] *	0.23	U	ug/L	1	0.23	1.0	1	EPA 8260B	01/17/08 04:35	jkg	
Trichlorofluoromethane [75-69-4] *	0.16	U	ug/L	1	0.16	1.0	1	EPA 8260B	01/17/08 04:35	jkg	
Vinyl acetate [108-05-4] *	0.19	U	ug/L	1	0.19	2.0	50	EPA 8260B	01/17/08 04:35	jkg	
Vinyl chloride [75-01-4] *	0.15	U	ug/L	1	0.15	1.0	1	EPA 8260B	01/17/08 04:35	jkg	

www.encolabs.com

Description:	0803-GW16R	**Lab Sample ID:**	C717605-10	**Received:**	01/15/08 17:20
Matrix:	Ground Water	**Sampled:**	01/15/08 10:49	**Work Order:**	C717605
Project:	Republic-East Carolina Landfill	**Sampled By:**	R. Stringfellow/K. Higgs		

Volatile Organic Compounds by GCMS

** - ENCO Cary certified analyte [NC 591]*

Analyte [CAS Number]	Results	Flag	Units	DF	MDL	MRL	NC SWSL	Method	Analyzed	By	Notes
Xylenes (Total) [1330-20-7]	0.21	U	ug/L	1	0.21	1.0	5	EPA 8260B	01/17/08 04:35	jkg	

Surrogates	*Results*	*DF*	*Spike Lvl*	*% Rec*	*% Rec Limits*	*Batch*	*Method*	*Analyzed*	*By*	Notes
4-Bromofluorobenzene	*44*	*1*	*50.0*	*88 %*	*69-120*	*8A16018*	*EPA 8260B*	*01/17/08 04:35*	*jkg*	
Dibromofluoromethane	*49*	*1*	*50.0*	*98 %*	*61-120*	*8A16018*	*EPA 8260B*	*01/17/08 04:35*	*jkg*	
Toluene-d8	*42*	*1*	*50.0*	*84 %*	*75-99*	*8A16018*	*EPA 8260B*	*01/17/08 04:35*	*jkg*	

www.encolabs.com

Description:	0803-GW16R	**Lab Sample ID:**	C717605-10	**Received:**	01/15/08 17:20
Matrix:	Ground Water	**Sampled:**	01/15/08 10:49	**Work Order:**	C717605
Project:	Republic-East Carolina Landfill	**Sampled By:**	R. Stringfellow/K. Higgs		

Metals by EPA 6000/7000 Series Methods

** - ENCO Cary certified analyte [NC 591]*

Analyte [CAS Number]	Results	Flag	Units	DF	MDL	MRL	NC SWSL	Method	Analyzed	By	Notes
Antimony [7440-36-0] *	0.68	U	ug/L	1	0.68	2.00	6	EPA 6020	01/18/08 11:08	JDH	
Arsenic [7440-38-2] *	2.0	U	ug/L	1	2.0	10.0	10	EPA 6010B	01/24/08 12:07	VLO	
Barium [7440-39-3] *	**38.0**	J	ug/L	1	0.20	10.0	100	EPA 6010B	01/24/08 12:07	VLO	
Beryllium [7440-41-7] *	0.70	U	ug/L	1	0.70	1.00	1	EPA 6010B	01/24/08 12:07	VLO	
Cadmium [7440-43-9] *	0.50	U	ug/L	1	0.50	1.00	1	EPA 6010B	01/24/08 12:07	VLO	
Chromium [7440-47-3] *	2.0	U	ug/L	1	2.0	10.0	10	EPA 6010B	01/24/08 12:07	VLO	
Cobalt [7440-48-4] *	**2.6**	J	ug/L	1	2.0	10.0	10	EPA 6010B	01/24/08 12:07	VLO	
Copper [7440-50-8] *	**1.10**	J	ug/L	1	0.60	10.0	10	EPA 6010B	01/24/08 12:07	VLO	
Lead [7439-92-1] *	2.0	U	ug/L	1	2.0	10.0	10	EPA 6010B	01/24/08 12:07	VLO	
Nickel [7440-02-0] *	2.0	U	ug/L	1	2.0	10.0	50	EPA 6010B	01/24/08 12:07	VLO	
Selenium [7782-49-2] *	2.0	U	ug/L	1	2.0	10.0	10	EPA 6010B	01/24/08 12:07	VLO	
Silver [7440-22-4] *	2.0	U	ug/L	1	2.0	10.0	10	EPA 6010B	01/24/08 12:07	VLO	
Thallium [7440-28-0] *	0.036	U	ug/L	1	0.036	1.00	5.5	EPA 6020	01/18/08 11:08	JDH	
Vanadium [7440-62-2] *	1.0	U	ug/L	1	1.0	10.0	25	EPA 6010B	01/24/08 12:07	VLO	
Zinc [7440-66-6] *	**13.6**		ug/L	1	1.0	10.0	10	EPA 6010B	01/24/08 12:07	VLO	

This report relates only to the sample as received by the laboratory, and may only be reproduced in full.

www.encolabs.com

Description: 0803-PW1
Matrix: Water
Project: Republic-East Carolina Landfill

Lab Sample ID: C717605-11
Sampled: 01/15/08 12:50
Sampled By: R. Stringfellow/K. Higgs

Received: 01/15/08 17:20
Work Order: C717605

Volatile Organic Compounds by GCMS

** - ENCO Cary certified analyte [NC 591]*

Analyte [CAS Number]	Results	Flag	Units	DF	MDL	MRL	NC SWSL	Method	Analyzed	By	Notes
1,1,1,2-Tetrachloroethane [630-20-6] *	0.16	U	ug/L	1	0.16	1.0	5	EPA 8260B	01/17/08 05:05	jkg	
1,1,1-Trichloroethane [71-55-6] *	0.24	U	ug/L	1	0.24	1.0	1	EPA 8260B	01/17/08 05:05	jkg	
1,1,2,2-Tetrachloroethane [79-34-5] *	0.27	U	ug/L	1	0.27	1.0	3	EPA 8260B	01/17/08 05:05	jkg	
1,1,2-Trichloroethane [79-00-5] *	0.24	U	ug/L	1	0.24	1.0	1	EPA 8260B	01/17/08 05:05	jkg	
1,1-Dichloroethane [75-34-3] *	0.090	U	ug/L	1	0.090	1.0	5	EPA 8260B	01/17/08 05:05	jkg	
1,1-Dichloroethene [75-35-4] *	0.14	U	ug/L	1	0.14	1.0	5	EPA 8260B	01/17/08 05:05	jkg	
1,2,3-Trichloropropane [96-18-4] *	0.32	U	ug/L	1	0.32	1.0	1	EPA 8260B	01/17/08 05:05	jkg	
1,2-Dibromo-3-chloropropane [96-12-8] *	0.19	U	ug/L	1	0.19	1.0	13	EPA 8260B	01/17/08 05:05	jkg	
1,2-Dibromoethane [106-93-4] *	0.19	U	ug/L	1	0.19	1.0	1	EPA 8260B	01/17/08 05:05	jkg	
1,2-Dichlorobenzene [95-50-1] *	0.17	U	ug/L	1	0.17	1.0	5	EPA 8260B	01/17/08 05:05	jkg	
1,2-Dichloroethane [107-06-2] *	0.36	U	ug/L	1	0.36	1.0	1	EPA 8260B	01/17/08 05:05	jkg	
1,2-Dichloropropane [78-87-5] *	0.18	U	ug/L	1	0.18	1.0	1	EPA 8260B	01/17/08 05:05	jkg	
1,4-Dichlorobenzene [106-46-7] *	0.15	U	ug/L	1	0.15	1.0	1	EPA 8260B	01/17/08 05:05	jkg	
2-Butanone [78-93-3] *	0.56	U	ug/L	1	0.56	5.0	100	EPA 8260B	01/17/08 05:05	jkg	
2-Hexanone [591-78-6] *	0.24	U	ug/L	1	0.24	5.0	50	EPA 8260B	01/17/08 05:05	jkg	
4-Methyl-2-pentanone [108-10-1] *	0.36	U	ug/L	1	0.36	5.0	100	EPA 8260B	01/17/08 05:05	jkg	
Acetone [67-64-1] *	0.90	U	ug/L	1	0.90	5.0	100	EPA 8260B	01/17/08 05:05	jkg	
Acrylonitrile [107-13-1] *	2.0	U	ug/L	1	2.0	5.0	200	EPA 8260B	01/17/08 05:05	jkg	
Benzene [71-43-2] *	0.12	U	ug/L	1	0.12	1.0	1	EPA 8260B	01/17/08 05:05	jkg	
Bromochloromethane [74-97-5] *	0.19	U	ug/L	1	0.19	1.0	3	EPA 8260B	01/17/08 05:05	jkg	
Bromodichloromethane [75-27-4] *	0.19	U	ug/L	1	0.19	0.40	1	EPA 8260B	01/17/08 05:05	jkg	
Bromoform [75-25-2] *	0.36	U	ug/L	1	0.36	1.0	3	EPA 8260B	01/17/08 05:05	jkg	
Bromomethane [74-83-9] *	0.21	U	ug/L	1	0.21	1.0	10	EPA 8260B	01/17/08 05:05	jkg	
Carbon disulfide [75-15-0] *	0.12	U	ug/L	1	0.12	5.0	100	EPA 8260B	01/17/08 05:05	jkg	
Carbon tetrachloride [56-23-5] *	0.38	U	ug/L	1	0.38	1.0	1	EPA 8260B	01/17/08 05:05	jkg	
Chlorobenzene [108-90-7] *	0.16	U	ug/L	1	0.16	1.0	3	EPA 8260B	01/17/08 05:05	jkg	
Chloroethane [75-00-3] *	0.40	U	ug/L	1	0.40	1.0	10	EPA 8260B	01/17/08 05:05	jkg	
Chloroform [67-66-3] *	0.16	U	ug/L	1	0.16	1.0	5	EPA 8260B	01/17/08 05:05	jkg	
Chloromethane [74-87-3] *	0.18	U	ug/L	1	0.18	1.0	1	EPA 8260B	01/17/08 05:05	jkg	
cis-1,2-Dichloroethene [156-59-2] *	0.14	U	ug/L	1	0.14	1.0	5	EPA 8260B	01/17/08 05:05	jkg	
cis-1,3-Dichloropropene [10061-01-5] *	0.16	U	ug/L	1	0.16	0.20	1	EPA 8260B	01/17/08 05:05	jkg	
Dibromochloromethane [124-48-1] *	0.18	U	ug/L	1	0.18	1.0	3	EPA 8260B	01/17/08 05:05	jkg	
Dibromomethane [74-95-3] *	0.14	U	ug/L	1	0.14	1.0	10	EPA 8260B	01/17/08 05:05	jkg	
Ethylbenzene [100-41-4] *	0.17	U	ug/L	1	0.17	1.0	1	EPA 8260B	01/17/08 05:05	jkg	
Iodomethane [74-88-4] *	0.23	U	ug/L	1	0.23	2.0	10	EPA 8260B	01/17/08 05:05	jkg	
Methylene chloride [75-09-2] *	0.088	U	ug/L	1	0.088	1.0	1	EPA 8260B	01/17/08 05:05	jkg	
Styrene [100-42-5] *	0.12	U	ug/L	1	0.12	1.0	1	EPA 8260B	01/17/08 05:05	jkg	
Tetrachloroethene [127-18-4] *	0.25	U	ug/L	1	0.25	1.0	1	EPA 8260B	01/17/08 05:05	jkg	
Toluene [108-88-3] *	0.15	U	ug/L	1	0.15	1.0	1	EPA 8260B	01/17/08 05:05	jkg	
trans-1,2-Dichloroethene [156-60-5] *	0.10	U	ug/L	1	0.10	1.0	5	EPA 8260B	01/17/08 05:05	jkg	
trans-1,3-Dichloropropene [10061-02-6] *	0.18	U	ug/L	1	0.18	0.20	1	EPA 8260B	01/17/08 05:05	jkg	
trans-1,4-Dichloro-2-butene [110-57-6] *	0.60	U	ug/L	1	0.60	1.0	100	EPA 8260B	01/17/08 05:05	jkg	
Trichloroethene [79-01-6] *	0.23	U	ug/L	1	0.23	1.0	1	EPA 8260B	01/17/08 05:05	jkg	
Trichlorofluoromethane [75-69-4] *	0.16	U	ug/L	1	0.16	1.0	1	EPA 8260B	01/17/08 05:05	jkg	
Vinyl acetate [108-05-4] *	0.19	U	ug/L	1	0.19	2.0	50	EPA 8260B	01/17/08 05:05	jkg	
Vinyl chloride [75-01-4] *	0.15	U	ug/L	1	0.15	1.0	1	EPA 8260B	01/17/08 05:05	jkg	

www.encolabs.com

Description:	0803-PW1	**Lab Sample ID:**	C717605-11	**Received:**	01/15/08 17:20
Matrix:	Water	**Sampled:**	01/15/08 12:50	**Work Order:**	C717605
Project:	Republic-East Carolina Landfill	**Sampled By:**	R. Stringfellow/K. Higgs		

Volatile Organic Compounds by GCMS

** - ENCO Cary certified analyte [NC 591]*

Analyte [CAS Number]	Results	Flag	Units	DF	MDL	MRL	NC SWSL	Method	Analyzed	By	Notes
Xylenes (Total) [1330-20-7]	0.21	U	ug/L	1	0.21	1.0	5	EPA 8260B	01/17/08 05:05	jkg	

Surrogates	*Results*	*DF*	*Spike Lvl*	*% Rec*	*% Rec Limits*	*Batch*	*Method*	*Analyzed*	*By*	Notes
4-Bromofluorobenzene	*45*	*1*	*50.0*	*91 %*	*69-120*	*8A16018*	*EPA 8260B*	*01/17/08 05:05*	*jkg*	
Dibromofluoromethane	*49*	*1*	*50.0*	*98 %*	*61-120*	*8A16018*	*EPA 8260B*	*01/17/08 05:05*	*jkg*	
Toluene-d8	*44*	*1*	*50.0*	*88 %*	*75-99*	*8A16018*	*EPA 8260B*	*01/17/08 05:05*	*jkg*	

www.encolabs.com

Description: 0803-PW1
Matrix: Water
Project: Republic-East Carolina Landfill

Lab Sample ID: C717605-11
Sampled: 01/15/08 12:50
Sampled By: R. Stringfellow/K. Higgs

Received: 01/15/08 17:20
Work Order: C717605

Metals by EPA 6000/7000 Series Methods

** - ENCO Cary certified analyte [NC 591]*

Analyte [CAS Number]	Results	Flag	Units	DF	MDL	MRL	NC SWSL	Method	Analyzed	By	Notes
Antimony [7440-36-0] *	0.68	U	ug/L	1	0.68	2.00	6	EPA 6020	01/18/08 11:10	JDH	
Arsenic [7440-38-2] *	2.0	U	ug/L	1	2.0	10.0	10	EPA 6010B	01/24/08 12:14	VLO	
Barium [7440-39-3] *	**66.5**	J	ug/L	1	0.20	10.0	100	EPA 6010B	01/24/08 12:14	VLO	
Beryllium [7440-41-7] *	0.70	U	ug/L	1	0.70	1.00	1	EPA 6010B	01/24/08 12:14	VLO	
Cadmium [7440-43-9] *	0.50	U	ug/L	1	0.50	1.00	1	EPA 6010B	01/24/08 12:14	VLO	
Chromium [7440-47-3] *	2.0	U	ug/L	1	2.0	10.0	10	EPA 6010B	01/24/08 12:14	VLO	
Cobalt [7440-48-4] *	2.0	U	ug/L	1	2.0	10.0	10	EPA 6010B	01/24/08 12:14	VLO	
Copper [7440-50-8] *	**2.20**	J	ug/L	1	0.60	10.0	10	EPA 6010B	01/24/08 12:14	VLO	
Lead [7439-92-1] *	2.0	U	ug/L	1	2.0	10.0	10	EPA 6010B	01/24/08 12:14	VLO	
Nickel [7440-02-0] *	2.0	U	ug/L	1	2.0	10.0	50	EPA 6010B	01/24/08 12:14	VLO	
Selenium [7782-49-2] *	2.0	U	ug/L	1	2.0	10.0	10	EPA 6010B	01/24/08 12:14	VLO	
Silver [7440-22-4] *	2.0	U	ug/L	1	2.0	10.0	10	EPA 6010B	01/24/08 12:14	VLO	
Thallium [7440-28-0] *	0.036	U	ug/L	1	0.036	1.00	5.5	EPA 6020	01/18/08 11:10	JDH	
Vanadium [7440-62-2] *	1.0	U	ug/L	1	1.0	10.0	25	EPA 6010B	01/24/08 12:14	VLO	
Zinc [7440-66-6] *	**81.5**		ug/L	1	1.0	10.0	10	EPA 6010B	01/24/08 12:14	VLO	

This report relates only to the sample as received by the laboratory, and may only be reproduced in full.

www.encolabs.com

Description: 0803-Field Blank
Matrix: Water
Project: Republic-East Carolina Landfill

Lab Sample ID: C717605-12
Sampled: 01/15/08 14:00
Sampled By: R. Stringfellow/K. Higgs

Received: 01/15/08 17:20
Work Order: C717605

Volatile Organic Compounds by GCMS

** - ENCO Cary certified analyte [NC 591]*

Analyte [CAS Number]	Results	Flag	Units	DF	MDL	MRL	NC SWSL	Method	Analyzed	By	Notes
1,1,1,2-Tetrachloroethane [630-20-6] *	0.16	U	ug/L	1	0.16	1.0	5	EPA 8260B	01/17/08 05:34	jkg	
1,1,1-Trichloroethane [71-55-6] *	0.24	U	ug/L	1	0.24	1.0	1	EPA 8260B	01/17/08 05:34	jkg	
1,1,2,2-Tetrachloroethane [79-34-5] *	0.27	U	ug/L	1	0.27	1.0	3	EPA 8260B	01/17/08 05:34	jkg	
1,1,2-Trichloroethane [79-00-5] *	0.24	U	ug/L	1	0.24	1.0	1	EPA 8260B	01/17/08 05:34	jkg	
1,1-Dichloroethane [75-34-3] *	0.090	U	ug/L	1	0.090	1.0	5	EPA 8260B	01/17/08 05:34	jkg	
1,1-Dichloroethene [75-35-4] *	0.14	U	ug/L	1	0.14	1.0	5	EPA 8260B	01/17/08 05:34	jkg	
1,2,3-Trichloropropane [96-18-4] *	0.32	U	ug/L	1	0.32	1.0	1	EPA 8260B	01/17/08 05:34	jkg	
1,2-Dibromo-3-chloropropane [96-12-8] *	0.19	U	ug/L	1	0.19	1.0	13	EPA 8260B	01/17/08 05:34	jkg	
1,2-Dibromoethane [106-93-4] *	0.19	U	ug/L	1	0.19	1.0	1	EPA 8260B	01/17/08 05:34	jkg	
1,2-Dichlorobenzene [95-50-1] *	0.17	U	ug/L	1	0.17	1.0	5	EPA 8260B	01/17/08 05:34	jkg	
1,2-Dichloroethane [107-06-2] *	0.36	U	ug/L	1	0.36	1.0	1	EPA 8260B	01/17/08 05:34	jkg	
1,2-Dichloropropane [78-87-5] *	0.18	U	ug/L	1	0.18	1.0	1	EPA 8260B	01/17/08 05:34	jkg	
1,4-Dichlorobenzene [106-46-7] *	0.15	U	ug/L	1	0.15	1.0	1	EPA 8260B	01/17/08 05:34	jkg	
2-Butanone [78-93-3] *	0.56	U	ug/L	1	0.56	5.0	100	EPA 8260B	01/17/08 05:34	jkg	
2-Hexanone [591-78-6] *	0.24	U	ug/L	1	0.24	5.0	50	EPA 8260B	01/17/08 05:34	jkg	
4-Methyl-2-pentanone [108-10-1] *	0.36	U	ug/L	1	0.36	5.0	100	EPA 8260B	01/17/08 05:34	jkg	
Acetone [67-64-1] *	0.90	U	ug/L	1	0.90	5.0	100	EPA 8260B	01/17/08 05:34	jkg	
Acrylonitrile [107-13-1] *	2.0	U	ug/L	1	2.0	5.0	200	EPA 8260B	01/17/08 05:34	jkg	
Benzene [71-43-2] *	0.12	U	ug/L	1	0.12	1.0	1	EPA 8260B	01/17/08 05:34	jkg	
Bromochloromethane [74-97-5] *	0.19	U	ug/L	1	0.19	1.0	3	EPA 8260B	01/17/08 05:34	jkg	
Bromodichloromethane [75-27-4] *	0.19	U	ug/L	1	0.19	0.40	1	EPA 8260B	01/17/08 05:34	jkg	
Bromoform [75-25-2] *	0.36	U	ug/L	1	0.36	1.0	3	EPA 8260B	01/17/08 05:34	jkg	
Bromomethane [74-83-9] *	0.21	U	ug/L	1	0.21	1.0	10	EPA 8260B	01/17/08 05:34	jkg	
Carbon disulfide [75-15-0] *	0.12	U	ug/L	1	0.12	5.0	100	EPA 8260B	01/17/08 05:34	jkg	
Carbon tetrachloride [56-23-5] *	0.38	U	ug/L	1	0.38	1.0	1	EPA 8260B	01/17/08 05:34	jkg	
Chlorobenzene [108-90-7] *	0.16	U	ug/L	1	0.16	1.0	3	EPA 8260B	01/17/08 05:34	jkg	
Chloroethane [75-00-3] *	0.40	U	ug/L	1	0.40	1.0	10	EPA 8260B	01/17/08 05:34	jkg	
Chloroform [67-66-3] *	0.16	U	ug/L	1	0.16	1.0	5	EPA 8260B	01/17/08 05:34	jkg	
Chloromethane [74-87-3] *	0.18	U	ug/L	1	0.18	1.0	1	EPA 8260B	01/17/08 05:34	jkg	
cis-1,2-Dichloroethene [156-59-2] *	0.14	U	ug/L	1	0.14	1.0	5	EPA 8260B	01/17/08 05:34	jkg	
cis-1,3-Dichloropropene [10061-01-5] *	0.16	U	ug/L	1	0.16	0.20	1	EPA 8260B	01/17/08 05:34	jkg	
Dibromochloromethane [124-48-1] *	0.18	U	ug/L	1	0.18	1.0	3	EPA 8260B	01/17/08 05:34	jkg	
Dibromomethane [74-95-3] *	0.14	U	ug/L	1	0.14	1.0	10	EPA 8260B	01/17/08 05:34	jkg	
Ethylbenzene [100-41-4] *	0.17	U	ug/L	1	0.17	1.0	1	EPA 8260B	01/17/08 05:34	jkg	
Iodomethane [74-88-4] *	0.23	U	ug/L	1	0.23	2.0	10	EPA 8260B	01/17/08 05:34	jkg	
Methylene chloride [75-09-2] *	0.088	U	ug/L	1	0.088	1.0	1	EPA 8260B	01/17/08 05:34	jkg	
Styrene [100-42-5] *	0.12	U	ug/L	1	0.12	1.0	1	EPA 8260B	01/17/08 05:34	jkg	
Tetrachloroethene [127-18-4] *	0.25	U	ug/L	1	0.25	1.0	1	EPA 8260B	01/17/08 05:34	jkg	
Toluene [108-88-3] *	0.15	U	ug/L	1	0.15	1.0	1	EPA 8260B	01/17/08 05:34	jkg	
trans-1,2-Dichloroethene [156-60-5] *	0.10	U	ug/L	1	0.10	1.0	5	EPA 8260B	01/17/08 05:34	jkg	
trans-1,3-Dichloropropene [10061-02-6] *	0.18	U	ug/L	1	0.18	0.20	1	EPA 8260B	01/17/08 05:34	jkg	
trans-1,4-Dichloro-2-butene [110-57-6] *	0.60	U	ug/L	1	0.60	1.0	100	EPA 8260B	01/17/08 05:34	jkg	
Trichloroethene [79-01-6] *	0.23	U	ug/L	1	0.23	1.0	1	EPA 8260B	01/17/08 05:34	jkg	
Trichlorofluoromethane [75-69-4] *	0.16	U	ug/L	1	0.16	1.0	1	EPA 8260B	01/17/08 05:34	jkg	
Vinyl acetate [108-05-4] *	0.19	U	ug/L	1	0.19	2.0	50	EPA 8260B	01/17/08 05:34	jkg	
Vinyl chloride [75-01-4] *	0.15	U	ug/L	1	0.15	1.0	1	EPA 8260B	01/17/08 05:34	jkg	

www.encolabs.com

Description:	0803-Field Blank	**Lab Sample ID:**	C717605-12	**Received:**	01/15/08 17:20
Matrix:	Water	**Sampled:**	01/15/08 14:00	**Work Order:**	C717605
Project:	Republic-East Carolina Landfill	**Sampled By:**	R. Stringfellow/K. Higgs		

Volatile Organic Compounds by GCMS

** - ENCO Cary certified analyte [NC 591]*

Analyte [CAS Number]	Results	Flag	Units	DF	MDL	MRL	NC SWSL	Method	Analyzed	By	Notes
Xylenes (Total) [1330-20-7]	0.21	U	ug/L	1	0.21	1.0	5	EPA 8260B	01/17/08 05:34	jkg	

Surrogates	*Results*	*DF*	*Spike Lvl*	*% Rec*	*% Rec Limits*	*Batch*	*Method*	*Analyzed*	*By*	Notes
4-Bromofluorobenzene	*45*	*1*	*50.0*	*90 %*	*69-120*	*8A16018*	*EPA 8260B*	*01/17/08 05:34*	*jkg*	
Dibromofluoromethane	*50*	*1*	*50.0*	*100 %*	*61-120*	*8A16018*	*EPA 8260B*	*01/17/08 05:34*	*jkg*	
Toluene-d8	*44*	*1*	*50.0*	*88 %*	*75-99*	*8A16018*	*EPA 8260B*	*01/17/08 05:34*	*jkg*	

www.encolabs.com

Description:	0803-Field Blank	**Lab Sample ID:**	C717605-12	**Received:**	01/15/08 17:20
Matrix:	Water	**Sampled:**	01/15/08 14:00	**Work Order:**	C717605
Project:	Republic-East Carolina Landfill	**Sampled By:**	R. Stringfellow/K. Higgs		

Metals by EPA 6000/7000 Series Methods

** - ENCO Cary certified analyte [NC 591]*

Analyte [CAS Number]	Results	Flag	Units	DF	MDL	MRL	NC SWSL	Method	Analyzed	By	Notes
Antimony [7440-36-0] *	0.68	U	ug/L	1	0.68	2.00	6	EPA 6020	01/18/08 11:23	JDH	
Arsenic [7440-38-2] *	2.0	U	ug/L	1	2.0	10.0	10	EPA 6010B	01/24/08 12:21	VLO	
Barium [7440-39-3] *	**0.30**	J	ug/L	1	0.20	10.0	100	EPA 6010B	01/24/08 12:21	VLO	
Beryllium [7440-41-7] *	0.70	U	ug/L	1	0.70	1.00	1	EPA 6010B	01/24/08 12:21	VLO	
Cadmium [7440-43-9] *	0.50	U	ug/L	1	0.50	1.00	1	EPA 6010B	01/24/08 12:21	VLO	
Chromium [7440-47-3] *	2.0	U	ug/L	1	2.0	10.0	10	EPA 6010B	01/24/08 12:21	VLO	
Cobalt [7440-48-4] *	2.0	U	ug/L	1	2.0	10.0	10	EPA 6010B	01/24/08 12:21	VLO	
Copper [7440-50-8] *	0.60	U	ug/L	1	0.60	10.0	10	EPA 6010B	01/24/08 12:21	VLO	
Lead [7439-92-1] *	2.0	U	ug/L	1	2.0	10.0	10	EPA 6010B	01/24/08 12:21	VLO	
Nickel [7440-02-0] *	2.0	U	ug/L	1	2.0	10.0	50	EPA 6010B	01/24/08 12:21	VLO	
Selenium [7782-49-2] *	2.0	U	ug/L	1	2.0	10.0	10	EPA 6010B	01/24/08 12:21	VLO	
Silver [7440-22-4] *	2.0	U	ug/L	1	2.0	10.0	10	EPA 6010B	01/24/08 12:21	VLO	
Thallium [7440-28-0] *	0.036	U	ug/L	1	0.036	1.00	5.5	EPA 6020	01/18/08 11:23	JDH	
Vanadium [7440-62-2] *	1.0	U	ug/L	1	1.0	10.0	25	EPA 6010B	01/24/08 12:21	VLO	
Zinc [7440-66-6] *	**1.3**	J	ug/L	1	1.0	10.0	10	EPA 6010B	01/24/08 12:21	VLO	

This report relates only to the sample as received by the laboratory, and may only be reproduced in full.

www.encolabs.com

Description: 0803-Trip Blank
Matrix: Water
Project: Republic-East Carolina Landfill

Lab Sample ID: C717605-13
Sampled: 01/14/08 00:00
Sampled By: R. Stringfellow/K. Higgs

Received: 01/15/08 17:20
Work Order: C717605

Volatile Organic Compounds by GCMS

** - ENCO Cary certified analyte [NC 591]*

Analyte [CAS Number]	Results	Flag	Units	DF	MDL	MRL	NC SWSL	Method	Analyzed	By	Notes
1,1,1,2-Tetrachloroethane [630-20-6] *	0.16	U	ug/L	1	0.16	1.0	5	EPA 8260B	01/18/08 15:15	jkg	
1,1,1-Trichloroethane [71-55-6] *	0.24	U	ug/L	1	0.24	1.0	1	EPA 8260B	01/18/08 15:15	jkg	
1,1,2,2-Tetrachloroethane [79-34-5] *	0.27	U	ug/L	1	0.27	1.0	3	EPA 8260B	01/18/08 15:15	jkg	
1,1,2-Trichloroethane [79-00-5] *	0.24	U	ug/L	1	0.24	1.0	1	EPA 8260B	01/18/08 15:15	jkg	
1,1-Dichloroethane [75-34-3] *	0.090	U	ug/L	1	0.090	1.0	5	EPA 8260B	01/18/08 15:15	jkg	
1,1-Dichloroethene [75-35-4] *	0.14	U	ug/L	1	0.14	1.0	5	EPA 8260B	01/18/08 15:15	jkg	
1,2,3-Trichloropropane [96-18-4] *	0.32	U	ug/L	1	0.32	1.0	1	EPA 8260B	01/18/08 15:15	jkg	
1,2-Dibromo-3-chloropropane [96-12-8] *	0.19	U	ug/L	1	0.19	1.0	13	EPA 8260B	01/18/08 15:15	jkg	
1,2-Dibromoethane [106-93-4] *	0.19	U	ug/L	1	0.19	1.0	1	EPA 8260B	01/18/08 15:15	jkg	
1,2-Dichlorobenzene [95-50-1] *	0.17	U	ug/L	1	0.17	1.0	5	EPA 8260B	01/18/08 15:15	jkg	
1,2-Dichloroethane [107-06-2] *	0.36	U	ug/L	1	0.36	1.0	1	EPA 8260B	01/18/08 15:15	jkg	
1,2-Dichloropropane [78-87-5] *	0.18	U	ug/L	1	0.18	1.0	1	EPA 8260B	01/18/08 15:15	jkg	
1,4-Dichlorobenzene [106-46-7] *	0.15	U	ug/L	1	0.15	1.0	1	EPA 8260B	01/18/08 15:15	jkg	
2-Butanone [78-93-3] *	0.56	U	ug/L	1	0.56	5.0	100	EPA 8260B	01/18/08 15:15	jkg	
2-Hexanone [591-78-6] *	0.24	U	ug/L	1	0.24	5.0	50	EPA 8260B	01/18/08 15:15	jkg	
4-Methyl-2-pentanone [108-10-1] *	0.36	U	ug/L	1	0.36	5.0	100	EPA 8260B	01/18/08 15:15	jkg	
Acetone [67-64-1] *	0.90	U	ug/L	1	0.90	5.0	100	EPA 8260B	01/18/08 15:15	jkg	
Acrylonitrile [107-13-1] *	2.0	U	ug/L	1	2.0	5.0	200	EPA 8260B	01/18/08 15:15	jkg	
Benzene [71-43-2] *	0.12	U	ug/L	1	0.12	1.0	1	EPA 8260B	01/18/08 15:15	jkg	
Bromochloromethane [74-97-5] *	0.19	U	ug/L	1	0.19	1.0	3	EPA 8260B	01/18/08 15:15	jkg	
Bromodichloromethane [75-27-4] *	0.19	U	ug/L	1	0.19	0.40	1	EPA 8260B	01/18/08 15:15	jkg	
Bromoform [75-25-2] *	0.36	U	ug/L	1	0.36	1.0	3	EPA 8260B	01/18/08 15:15	jkg	
Bromomethane [74-83-9] *	0.21	U	ug/L	1	0.21	1.0	10	EPA 8260B	01/18/08 15:15	jkg	
Carbon disulfide [75-15-0] *	0.12	U	ug/L	1	0.12	5.0	100	EPA 8260B	01/18/08 15:15	jkg	
Carbon tetrachloride [56-23-5] *	0.38	U	ug/L	1	0.38	1.0	1	EPA 8260B	01/18/08 15:15	jkg	
Chlorobenzene [108-90-7] *	0.16	U	ug/L	1	0.16	1.0	3	EPA 8260B	01/18/08 15:15	jkg	
Chloroethane [75-00-3] *	0.40	U	ug/L	1	0.40	1.0	10	EPA 8260B	01/18/08 15:15	jkg	
Chloroform [67-66-3] *	0.16	U	ug/L	1	0.16	1.0	5	EPA 8260B	01/18/08 15:15	jkg	
Chloromethane [74-87-3] *	0.18	U	ug/L	1	0.18	1.0	1	EPA 8260B	01/18/08 15:15	jkg	
cis-1,2-Dichloroethene [156-59-2] *	0.14	U	ug/L	1	0.14	1.0	5	EPA 8260B	01/18/08 15:15	jkg	
cis-1,3-Dichloropropene [10061-01-5] *	0.16	U	ug/L	1	0.16	0.20	1	EPA 8260B	01/18/08 15:15	jkg	
Dibromochloromethane [124-48-1] *	0.18	U	ug/L	1	0.18	1.0	3	EPA 8260B	01/18/08 15:15	jkg	
Dibromomethane [74-95-3] *	0.14	U	ug/L	1	0.14	1.0	10	EPA 8260B	01/18/08 15:15	jkg	
Ethylbenzene [100-41-4] *	0.17	U	ug/L	1	0.17	1.0	1	EPA 8260B	01/18/08 15:15	jkg	
Iodomethane [74-88-4] *	0.23	U	ug/L	1	0.23	2.0	10	EPA 8260B	01/18/08 15:15	jkg	
Methylene chloride [75-09-2] *	0.088	U	ug/L	1	0.088	1.0	1	EPA 8260B	01/18/08 15:15	jkg	
Styrene [100-42-5] *	0.12	U	ug/L	1	0.12	1.0	1	EPA 8260B	01/18/08 15:15	jkg	
Tetrachloroethene [127-18-4] *	0.25	U	ug/L	1	0.25	1.0	1	EPA 8260B	01/18/08 15:15	jkg	
Toluene [108-88-3] *	0.15	U	ug/L	1	0.15	1.0	1	EPA 8260B	01/18/08 15:15	jkg	
trans-1,2-Dichloroethene [156-60-5] *	0.10	U	ug/L	1	0.10	1.0	5	EPA 8260B	01/18/08 15:15	jkg	
trans-1,3-Dichloropropene [10061-02-6] *	0.18	U	ug/L	1	0.18	0.20	1	EPA 8260B	01/18/08 15:15	jkg	
trans-1,4-Dichloro-2-butene [110-57-6] *	0.60	U	ug/L	1	0.60	1.0	100	EPA 8260B	01/18/08 15:15	jkg	
Trichloroethene [79-01-6] *	0.23	U	ug/L	1	0.23	1.0	1	EPA 8260B	01/18/08 15:15	jkg	
Trichlorofluoromethane [75-69-4] *	0.16	U	ug/L	1	0.16	1.0	1	EPA 8260B	01/18/08 15:15	jkg	
Vinyl acetate [108-05-4] *	0.19	U	ug/L	1	0.19	2.0	50	EPA 8260B	01/18/08 15:15	jkg	
Vinyl chloride [75-01-4] *	0.15	U	ug/L	1	0.15	1.0	1	EPA 8260B	01/18/08 15:15	jkg	

www.encolabs.com

Description:	0803-Trip Blank	**Lab Sample ID:**	C717605-13	**Received:**	01/15/08 17:20
Matrix:	Water	**Sampled:**	01/14/08 00:00	**Work Order:**	C717605
Project:	Republic-East Carolina Landfill	**Sampled By:**	R. Stringfellow/K. Higgs		

Volatile Organic Compounds by GCMS

** - ENCO Cary certified analyte [NC 591]*

Analyte [CAS Number]	Results	Flag	Units	DF	MDL	MRL	NC SWSL	Method	Analyzed	By	Notes
Xylenes (Total) [1330-20-7]	0.21	U	ug/L	1	0.21	1.0	5	EPA 8260B	01/18/08 15:15	jkg	

Surrogates	*Results*	*DF*	*Spike Lvl*	*% Rec*	*% Rec Limits*	*Batch*	*Method*	*Analyzed*	*By*	Notes
4-Bromofluorobenzene	*44*	*1*	*50.0*	*88 %*	*69-120*	*8A18007*	*EPA 8260B*	*01/18/08 15:15*	*jkg*	
Dibromofluoromethane	*44*	*1*	*50.0*	*89 %*	*61-120*	*8A18007*	*EPA 8260B*	*01/18/08 15:15*	*jkg*	
Toluene-d8	*42*	*1*	*50.0*	*85 %*	*75-99*	*8A18007*	*EPA 8260B*	*01/18/08 15:15*	*jkg*	

This report relates only to the sample as received by the laboratory, and may only be reproduced in full.

QUALITY CONTROL

Volatile Organic Compounds by GCMS - Quality Control

Batch 8A16004 - EPA 5030B_MS

Blank (8A16004-BLK1) Prepared: 01/16/2008 08:26 Analyzed: 01/16/2008 12:04

Analyte	Result	Flag	MRL	Units	Spike Level	Source Result	%REC	%REC Limits	RPD	RPD Limit	Notes
Chloromethane	0.18	U	1.0	ug/L							
Vinyl chloride	0.15	U	1.0	ug/L							
Bromomethane	0.21	U	1.0	ug/L							
Chloroethane	0.40	U	1.0	ug/L							
Trichlorofluoromethane	0.16	U	1.0	ug/L							
1,1-Dichloroethene	0.14	U	1.0	ug/L							
Acetone	0.90	U	5.0	ug/L							
Iodomethane	0.23	U	2.0	ug/L							
Carbon disulfide	0.12	U	5.0	ug/L							
Methylene chloride	0.088	U	1.0	ug/L							
Acrylonitrile	2.0	U	5.0	ug/L							
trans-1,2-Dichloroethene	0.10	U	1.0	ug/L							
1,1-Dichloroethane	0.090	U	1.0	ug/L							
Vinyl acetate	0.19	U	2.0	ug/L							
2-Butanone	0.56	U	5.0	ug/L							
cis-1,2-Dichloroethene	0.14	U	1.0	ug/L							
Bromochloromethane	0.19	U	1.0	ug/L							
Chloroform	0.16	U	1.0	ug/L							
1,1,1-Trichloroethane	0.24	U	1.0	ug/L							
Carbon tetrachloride	0.38	U	1.0	ug/L							
1,2-Dichloroethane	0.36	U	1.0	ug/L							
Benzene	0.12	U	1.0	ug/L							
Trichloroethene	0.23	U	1.0	ug/L							
1,2-Dichloropropane	0.18	U	1.0	ug/L							
Dibromomethane	0.14	U	1.0	ug/L							
Bromodichloromethane	0.19	U	0.40	ug/L							
cis-1,3-Dichloropropene	0.16	U	0.20	ug/L							
4-Methyl-2-pentanone	0.36	U	5.0	ug/L							
Toluene	0.15	U	1.0	ug/L							
trans-1,3-Dichloropropene	0.18	U	0.20	ug/L							
1,1,2-Trichloroethane	0.24	U	1.0	ug/L							
Tetrachloroethene	0.25	U	1.0	ug/L							
2-Hexanone	0.24	U	5.0	ug/L							
Dibromochloromethane	0.18	U	1.0	ug/L							
1,2-Dibromoethane	0.19	U	1.0	ug/L							
Chlorobenzene	0.16	U	1.0	ug/L							
1,1,1,2-Tetrachloroethane	0.16	U	1.0	ug/L							
Ethylbenzene	0.17	U	1.0	ug/L							
Styrene	0.12	U	1.0	ug/L							
Bromoform	0.36	U	1.0	ug/L							
1,1,2,2-Tetrachloroethane	0.27	U	1.0	ug/L							
1,2,3-Trichloropropane	0.32	U	1.0	ug/L							
trans-1,4-Dichloro-2-butene	0.60	U	1.0	ug/L							
1,4-Dichlorobenzene	0.15	U	1.0	ug/L							
1,2-Dichlorobenzene	0.17	U	1.0	ug/L							
1,2-Dibromo-3-chloropropane	0.19	U	1.0	ug/L							
Xylenes (Total)	0.21	U	1.0	ug/L							
Surrogate: Dibromofluoromethane	*44*			*ug/L*	*50.0*		*88*	*61-120*			

QUALITY CONTROL

Volatile Organic Compounds by GCMS - Quality Control

Batch 8A16004 - EPA 5030B_MS

Blank (8A16004-BLK1) Continued Prepared: 01/16/2008 08:26 Analyzed: 01/16/2008 12:04

Analyte	Result	Flag	MRL	Units	Spike Level	Source Result	%REC	%REC Limits	RPD	RPD Limit	Notes
Surrogate: Toluene-d8	*41*			*ug/L*	*50.0*		*81*	*75-99*			
Surrogate: 4-Bromofluorobenzene	*45*			*ug/L*	*50.0*		*90*	*69-120*			

LCS (8A16004-BS1) Prepared: 01/16/2008 08:26 Analyzed: 01/16/2008 12:33

Analyte	Result	Flag	MRL	Units	Spike Level	Source Result	%REC	%REC Limits	RPD	RPD Limit	Notes
1,1-Dichloroethene	21		1.0	ug/L	20.0		107	71-121			
Benzene	22		1.0	ug/L	20.0		112	77-128			
Trichloroethene	18		1.0	ug/L	20.0		92	79-120			
Toluene	20		1.0	ug/L	20.0		98	77-120			
Chlorobenzene	19		1.0	ug/L	20.0		93	78-120			

Matrix Spike (8A16004-MS1) Prepared: 01/16/2008 08:26 Analyzed: 01/16/2008 13:03

Source: C717605-02

Analyte	Result	Flag	MRL	Units	Spike Level	Source Result	%REC	%REC Limits	RPD	RPD Limit	Notes
1,1-Dichloroethene	24		1.0	ug/L	20.0	0.14 U	121	71-121			
Benzene	24		1.0	ug/L	20.0	0.12 U	121	77-128			
Trichloroethene	20		1.0	ug/L	20.0	0.23 U	102	79-120			
Toluene	21		1.0	ug/L	20.0	0.15 U	107	77-120			
Chlorobenzene	20		1.0	ug/L	20.0	0.16 U	102	78-120			

Matrix Spike Dup (8A16004-MSD1) Prepared: 01/16/2008 08:26 Analyzed: 01/16/2008 13:32

Source: C717605-02

Analyte	Result	Flag	MRL	Units	Spike Level	Source Result	%REC	%REC Limits	RPD	RPD Limit	Notes
1,1-Dichloroethene	23		1.0	ug/L	20.0	0.14 U	116	71-121	4	27	
Benzene	23		1.0	ug/L	20.0	0.12 U	116	77-128	4	27	
Trichloroethene	20		1.0	ug/L	20.0	0.23 U	102	79-120	0	27	
Toluene	22		1.0	ug/L	20.0	0.15 U	108	77-120	1	23	
Chlorobenzene	20		1.0	ug/L	20.0	0.16 U	101	78-120	1	25	

Batch 8A16018 - EPA 5030B_MS

Blank (8A16018-BLK1) Prepared: 01/16/2008 12:55 Analyzed: 01/17/2008 00:42

Analyte	Result	Flag	MRL	Units	Spike Level	Source Result	%REC	%REC Limits	RPD	RPD Limit	Notes
Chloromethane	0.18	U	1.0	ug/L							
Vinyl chloride	0.15	U	1.0	ug/L							
Bromomethane	0.21	U	1.0	ug/L							
Chloroethane	0.40	U	1.0	ug/L							
Trichlorofluoromethane	0.16	U	1.0	ug/L							
1,1-Dichloroethene	0.14	U	1.0	ug/L							
Acetone	0.90	U	5.0	ug/L							
Iodomethane	0.23	U	2.0	ug/L							
Carbon disulfide	0.12	U	5.0	ug/L							
Methylene chloride	0.088	U	2.0	ug/L							

QUALITY CONTROL

Volatile Organic Compounds by GCMS - Quality Control

Batch 8A16018 - EPA 5030B_MS

Blank (8A16018-BLK1) Continued Prepared: 01/16/2008 12:55 Analyzed: 01/17/2008 00:42

Analyte	Result	Flag	MRL	Units	Spike Level	Source Result	%REC	%REC Limits	RPD	RPD Limit	Notes
Acrylonitrile	2.0	U	5.0	ug/L							
trans-1,2-Dichloroethene	0.10	U	1.0	ug/L							
1,1-Dichloroethane	0.090	U	1.0	ug/L							
Vinyl acetate	0.19	U	2.0	ug/L							
2-Butanone	0.56	U	5.0	ug/L							
cis-1,2-Dichloroethene	0.14	U	1.0	ug/L							
Bromochloromethane	0.19	U	1.0	ug/L							
Chloroform	0.16	U	1.0	ug/L							
1,1,1-Trichloroethane	0.24	U	1.0	ug/L							
Carbon tetrachloride	0.38	U	1.0	ug/L							
1,2-Dichloroethane	0.36	U	1.0	ug/L							
Benzene	0.12	U	1.0	ug/L							
Trichloroethene	0.23	U	1.0	ug/L							
1,2-Dichloropropane	0.18	U	1.0	ug/L							
Dibromomethane	0.14	U	1.0	ug/L							
Bromodichloromethane	0.19	U	1.0	ug/L							
cis-1,3-Dichloropropene	0.16	U	1.0	ug/L							
4-Methyl-2-pentanone	0.36	U	5.0	ug/L							
Toluene	0.15	U	1.0	ug/L							
trans-1,3-Dichloropropene	0.18	U	1.0	ug/L							
1,1,2-Trichloroethane	0.24	U	1.0	ug/L							
Tetrachloroethene	0.25	U	1.0	ug/L							
2-Hexanone	0.24	U	5.0	ug/L							
Dibromochloromethane	0.18	U	1.0	ug/L							
1,2-Dibromoethane	0.19	U	1.0	ug/L							
Chlorobenzene	0.16	U	1.0	ug/L							
1,1,1,2-Tetrachloroethane	0.16	U	1.0	ug/L							
Ethylbenzene	0.17	U	1.0	ug/L							
Styrene	0.12	U	1.0	ug/L							
Bromoform	0.36	U	1.0	ug/L							
1,1,2,2-Tetrachloroethane	0.27	U	1.0	ug/L							
1,2,3-Trichloropropane	0.32	U	1.0	ug/L							
trans-1,4-Dichloro-2-butene	0.60	U	1.0	ug/L							
1,4-Dichlorobenzene	0.15	U	1.0	ug/L							
1,2-Dichlorobenzene	0.17	U	1.0	ug/L							
1,2-Dibromo-3-chloropropane	0.19	U	1.0	ug/L							
Xylenes (Total)	0.21	U	1.0	ug/L							
Surrogate: Dibromofluoromethane	*45*			*ug/L*	*50.0*		*90*	*61-120*			
Surrogate: Toluene-d8	*40*			*ug/L*	*50.0*		*80*	*75-99*			
Surrogate: 4-Bromofluorobenzene	*43*			*ug/L*	*50.0*		*86*	*69-120*			

LCS (8A16018-BS1) Prepared: 01/16/2008 12:55 Analyzed: 01/17/2008 01:11

Analyte	Result	Flag	MRL	Units	Spike Level	Source Result	%REC	%REC Limits	RPD	RPD Limit	Notes
1,1-Dichloroethene	20		1.0	ug/L	20.0		100	71-121			
Benzene	21		1.0	ug/L	20.0		106	77-128			
Trichloroethene	18		1.0	ug/L	20.0		90	79-120			
Toluene	19		1.0	ug/L	20.0		95	77-120			

QUALITY CONTROL

Volatile Organic Compounds by GCMS - Quality Control

Batch 8A16018 - EPA 5030B_MS

LCS (8A16018-BS1) Continued Prepared: 01/16/2008 12:55 Analyzed: 01/17/2008 01:11

Analyte	Result	Flag	MRL	Units	Spike Level	Source Result	%REC	%REC Limits	RPD	RPD Limit	Notes
Chlorobenzene	19		1.0	ug/L	20.0		94	78-120			

Matrix Spike (8A16018-MS1) Prepared: 01/16/2008 12:55 Analyzed: 01/17/2008 01:40

Source: C800129-14

Analyte	Result	Flag	MRL	Units	Spike Level	Source Result	%REC	%REC Limits	RPD	RPD Limit	Notes
1,1-Dichloroethene	22		1.0	ug/L	20.0	0.14 U	110	71-121			
Benzene	23		1.0	ug/L	20.0	0.12 U	113	77-128			
Trichloroethene	19		1.0	ug/L	20.0	0.23 U	97	79-120			
Toluene	20		1.0	ug/L	20.0	0.15 U	101	77-120			
Chlorobenzene	19		1.0	ug/L	20.0	0.16 U	95	78-120			

Matrix Spike Dup (8A16018-MSD1) Prepared: 01/16/2008 12:55 Analyzed: 01/17/2008 02:09

Source: C800129-14

Analyte	Result	Flag	MRL	Units	Spike Level	Source Result	%REC	%REC Limits	RPD	RPD Limit	Notes
1,1-Dichloroethene	23		1.0	ug/L	20.0	0.14 U	113	71-121	2	27	
Benzene	22		1.0	ug/L	20.0	0.12 U	110	77-128	3	27	
Trichloroethene	19		1.0	ug/L	20.0	0.23 U	97	79-120	0.5	27	
Toluene	20		1.0	ug/L	20.0	0.15 U	100	77-120	1	23	
Chlorobenzene	19		1.0	ug/L	20.0	0.16 U	96	78-120	0.7	25	

Batch 8A18007 - EPA 5030B_MS

Blank (8A18007-BLK1) Prepared: 01/18/2008 10:57 Analyzed: 01/18/2008 12:20

Analyte	Result	Flag	MRL	Units	Spike Level	Source Result	%REC	%REC Limits	RPD	RPD Limit	Notes
Chloromethane	0.18	U	1.0	ug/L							
Vinyl chloride	0.15	U	1.0	ug/L							
Bromomethane	0.21	U	1.0	ug/L							
Chloroethane	0.40	U	1.0	ug/L							
Trichlorofluoromethane	0.16	U	1.0	ug/L							
1,1-Dichloroethene	0.14	U	1.0	ug/L							
Acetone	0.90	U	5.0	ug/L							
Iodomethane	0.23	U	2.0	ug/L							
Carbon disulfide	0.12	U	5.0	ug/L							
Methylene chloride	0.088	U	1.0	ug/L							
Acrylonitrile	2.0	U	5.0	ug/L							
trans-1,2-Dichloroethene	0.10	U	1.0	ug/L							
1,1-Dichloroethane	0.090	U	1.0	ug/L							
Vinyl acetate	0.19	U	2.0	ug/L							
2-Butanone	0.56	U	5.0	ug/L							
cis-1,2-Dichloroethene	0.14	U	1.0	ug/L							
Bromochloromethane	0.19	U	1.0	ug/L							
Chloroform	0.16	U	1.0	ug/L							
1,1,1-Trichloroethane	0.24	U	1.0	ug/L							
Carbon tetrachloride	0.38	U	1.0	ug/L							
1,2-Dichloroethane	0.36	U	1.0	ug/L							

QUALITY CONTROL

Volatile Organic Compounds by GCMS - Quality Control

Batch 8A18007 - EPA 5030B_MS

Blank (8A18007-BLK1) Continued Prepared: 01/18/2008 10:57 Analyzed: 01/18/2008 12:20

Analyte	Result	Flag	MRL	Units	Spike Level	Source Result	%REC	%REC Limits	RPD	RPD Limit	Notes
Benzene	0.12	U	1.0	ug/L							
Trichloroethene	0.23	U	1.0	ug/L							
1,2-Dichloropropane	0.18	U	1.0	ug/L							
Dibromomethane	0.14	U	1.0	ug/L							
Bromodichloromethane	0.19	U	0.40	ug/L							
cis-1,3-Dichloropropene	0.16	U	0.20	ug/L							
4-Methyl-2-pentanone	0.36	U	5.0	ug/L							
Toluene	0.15	U	1.0	ug/L							
trans-1,3-Dichloropropene	0.18	U	0.20	ug/L							
1,1,2-Trichloroethane	0.24	U	1.0	ug/L							
Tetrachloroethene	0.25	U	1.0	ug/L							
2-Hexanone	0.24	U	5.0	ug/L							
Dibromochloromethane	0.18	U	1.0	ug/L							
1,2-Dibromoethane	0.19	U	1.0	ug/L							
Chlorobenzene	0.16	U	1.0	ug/L							
1,1,1,2-Tetrachloroethane	0.16	U	1.0	ug/L							
Ethylbenzene	0.17	U	1.0	ug/L							
Styrene	0.12	U	1.0	ug/L							
Bromoform	0.36	U	1.0	ug/L							
1,1,2,2-Tetrachloroethane	0.27	U	1.0	ug/L							
1,2,3-Trichloropropane	0.32	U	1.0	ug/L							
trans-1,4-Dichloro-2-butene	0.60	U	1.0	ug/L							
1,4-Dichlorobenzene	0.15	U	1.0	ug/L							
1,2-Dichlorobenzene	0.17	U	1.0	ug/L							
1,2-Dibromo-3-chloropropane	0.19	U	1.0	ug/L							
Xylenes (Total)	0.21	U	1.0	ug/L							
Surrogate: Dibromofluoromethane	*40*			*ug/L*	*50.0*		*80*	*61-120*			
Surrogate: Toluene-d8	*41*			*ug/L*	*50.0*		*82*	*75-99*			
Surrogate: 4-Bromofluorobenzene	*46*			*ug/L*	*50.0*		*92*	*69-120*			

LCS (8A18007-BS1) Prepared: 01/18/2008 10:57 Analyzed: 01/18/2008 12:49

Analyte	Result	Flag	MRL	Units	Spike Level	Source Result	%REC	%REC Limits	RPD	RPD Limit	Notes
1,1-Dichloroethene	18		1.0	ug/L	20.0		90	71-121			
Benzene	20		1.0	ug/L	20.0		100	77-128			
Trichloroethene	17		1.0	ug/L	20.0		87	79-120			
Toluene	18		1.0	ug/L	20.0		90	77-120			
Chlorobenzene	18		1.0	ug/L	20.0		90	78-120			

Matrix Spike (8A18007-MS1) Prepared: 01/18/2008 10:57 Analyzed: 01/18/2008 13:19

Source: C717761-07

Analyte	Result	Flag	MRL	Units	Spike Level	Source Result	%REC	%REC Limits	RPD	RPD Limit	Notes
1,1-Dichloroethene	22		1.0	ug/L	20.0	0.14 U	112	71-121			
Benzene	23		1.0	ug/L	20.0	0.12 U	117	77-128			
Trichloroethene	21		1.0	ug/L	20.0	0.23 U	103	79-120			
Toluene	22		1.0	ug/L	20.0	0.15 U	108	77-120			
Chlorobenzene	20		1.0	ug/L	20.0	0.16 U	102	78-120			

QUALITY CONTROL

Volatile Organic Compounds by GCMS - Quality Control

Batch 8A18007 - EPA 5030B_MS

Matrix Spike Dup (8A18007-MSD1) Prepared: 01/18/2008 10:57 Analyzed: 01/18/2008 13:48

Source: C717761-07

Analyte	Result	Flag	MRL	Units	Spike Level	Source Result	%REC	%REC Limits	RPD	RPD Limit	Notes
1,1-Dichloroethene	22		1.0	ug/L	20.0	0.14 U	109	71-121	3	27	
Benzene	23		1.0	ug/L	20.0	0.12 U	114	77-128	2	27	
Trichloroethene	20		1.0	ug/L	20.0	0.23 U	102	79-120	2	27	
Toluene	20		1.0	ug/L	20.0	0.15 U	102	77-120	5	23	
Chlorobenzene	20		1.0	ug/L	20.0	0.16 U	99	78-120	3	25	

Metals by EPA 6000/7000 Series Methods - Quality Control

Batch 8A17001 - EPA 3005A

Blank (8A17001-BLK1) Prepared: 01/17/2008 06:26 Analyzed: 01/24/2008 10:11

Analyte	Result	Flag	MRL	Units	Spike Level	Source Result	%REC	%REC Limits	RPD	RPD Limit	Notes
Arsenic	2.0	U	10.0	ug/L							
Barium	0.20	U	10.0	ug/L							
Beryllium	0.70	U	1.00	ug/L							
Cadmium	0.50	U	1.00	ug/L							
Chromium	2.0	U	10.0	ug/L							
Cobalt	2.0	U	10.0	ug/L							
Copper	**0.70**	**J**	10.0	ug/L							
Lead	2.0	U	10.0	ug/L							
Nickel	2.0	U	10.0	ug/L							
Selenium	2.0	U	10.0	ug/L							
Silver	2.0	U	10.0	ug/L							
Vanadium	**1.0**	**J**	10.0	ug/L							
Zinc	1.0	U	10.0	ug/L							

LCS (8A17001-BS1) Prepared: 01/17/2008 06:26 Analyzed: 01/24/2008 10:18

Analyte	Result	Flag	MRL	Units	Spike Level	Source Result	%REC	%REC Limits	RPD	RPD Limit	Notes
Arsenic	508		10.0	ug/L	500		102	82-117			
Barium	530		10.0	ug/L	500		106	72-125			
Beryllium	253		1.00	ug/L	250		101	75-121			
Cadmium	254		1.00	ug/L	250		101	72-120			
Chromium	504		10.0	ug/L	500		101	78-119			
Cobalt	494		10.0	ug/L	500		99	76-117			
Copper	263	B	10.0	ug/L	250		105	80-117			
Lead	503		10.0	ug/L	500		101	72-121			
Nickel	506		10.0	ug/L	500		101	78-116			
Selenium	538		10.0	ug/L	500		108	82-127			
Silver	50.4		10.0	ug/L	50.0		101	80-128			
Vanadium	243	B	10.0	ug/L	250		97	78-117			
Zinc	491		10.0	ug/L	500		98	80-120			

Matrix Spike (8A17001-MS1) Prepared: 01/17/2008 06:26 Analyzed: 01/24/2008 10:36

Source: C717605-02

QUALITY CONTROL

Metals by EPA 6000/7000 Series Methods - Quality Control

Batch 8A17001 - EPA 3005A

Matrix Spike (8A17001-MS1) Continued Prepared: 01/17/2008 06:26 Analyzed: 01/24/2008 10:36

Source: C717605-02

Analyte	Result	Flag	MRL	Units	Spike Level	Source Result	%REC	%REC Limits	RPD	RPD Limit	Notes
Arsenic	505		10.0	ug/L	500	2.0 U	101	64-126			
Barium	643		10.0	ug/L	500	129	103	74-119			
Beryllium	254		1.00	ug/L	250	1.50	101	70-131			
Cadmium	251		1.00	ug/L	250	0.50 U	100	68-121			
Chromium	489		10.0	ug/L	500	2.0 U	98	73-120			
Cobalt	524		10.0	ug/L	500	35.1	98	76-120			
Copper	254	B	10.0	ug/L	250	1.60	101	75-123			
Lead	493		10.0	ug/L	500	2.0 U	99	68-126			
Nickel	507		10.0	ug/L	500	8.0	100	64-126			
Selenium	532		10.0	ug/L	500	2.0 U	106	65-129			
Silver	50.3		10.0	ug/L	50.0	2.0 U	101	69-121			
Vanadium	237	B	10.0	ug/L	250	1.0 U	95	71-130			
Zinc	498		10.0	ug/L	500	5.7	98	63-131			

Matrix Spike Dup (8A17001-MSD1) Prepared: 01/17/2008 06:26 Analyzed: 01/24/2008 10:43

Source: C717605-02

Analyte	Result	Flag	MRL	Units	Spike Level	Source Result	%REC	%REC Limits	RPD	RPD Limit	Notes
Arsenic	501		10.0	ug/L	500	2.0 U	100	64-126	0.8	12	
Barium	645		10.0	ug/L	500	129	103	74-119	0.3	11	
Beryllium	252		1.00	ug/L	250	1.50	100	70-131	0.9	21	
Cadmium	248		1.00	ug/L	250	0.50 U	99	68-121	1	12	
Chromium	483		10.0	ug/L	500	2.0 U	97	73-120	1	10	
Cobalt	521		10.0	ug/L	500	35.1	97	76-120	0.7	17	
Copper	255	B	10.0	ug/L	250	1.60	102	75-123	0.4	16	
Lead	494		10.0	ug/L	500	2.0 U	99	68-126	0.2	19	
Nickel	501		10.0	ug/L	500	8.0	99	64-126	1	12	
Selenium	527		10.0	ug/L	500	2.0 U	105	65-129	0.9	10	
Silver	49.8		10.0	ug/L	50.0	2.0 U	100	69-121	1	12	
Vanadium	236	B	10.0	ug/L	250	1.0 U	94	71-130	0.7	16	
Zinc	488		10.0	ug/L	500	5.7	96	63-131	2	24	

Batch 8A17002 - EPA 3005A

Blank (8A17002-BLK1) Prepared: 01/17/2008 06:39 Analyzed: 01/18/2008 10:26

Analyte	Result	Flag	MRL	Units	Spike Level	Source Result	%REC	%REC Limits	RPD	RPD Limit	Notes
Antimony	0.68	U	2.00	ug/L							
Thallium	0.036	U	1.00	ug/L							

LCS (8A17002-BS1) Prepared: 01/17/2008 06:39 Analyzed: 01/18/2008 10:29

Analyte	Result	Flag	MRL	Units	Spike Level	Source Result	%REC	%REC Limits	RPD	RPD Limit	Notes
Antimony	25.1		2.00	ug/L	25.0		100	85-115			
Thallium	23.8		1.00	ug/L	25.0		95	85-115			

QUALITY CONTROL

Metals by EPA 6000/7000 Series Methods - Quality Control

Batch 8A17002 - EPA 3005A

Matrix Spike (8A17002-MS1) Prepared: 01/17/2008 06:39 Analyzed: 01/18/2008 10:34

Source: C717605-02

Analyte	Result	Flag	MRL	Units	Spike Level	Source Result	%REC	%REC Limits	RPD	RPD Limit	Notes
Antimony	24.5		2.00	ug/L	25.0	0.68 U	98	85-115			
Thallium	23.7		1.00	ug/L	25.0	0.069	95	85-115			

Matrix Spike Dup (8A17002-MSD1) Prepared: 01/17/2008 06:39 Analyzed: 01/18/2008 10:37

Source: C717605-02

Analyte	Result	Flag	MRL	Units	Spike Level	Source Result	%REC	%REC Limits	RPD	RPD Limit	Notes
Antimony	24.5		2.00	ug/L	25.0	0.68 U	98	85-115	0.3	20	
Thallium	23.6		1.00	ug/L	25.0	0.069	94	85-115	0.5	20	

FLAGS/NOTES AND DEFINITIONS

B	The analyte was detected in the associated method blank.
D	The sample was analyzed at dilution.
J	The reported value is between the laboratory method detection limit (MDL) and the laboratory method reporting limit (MRL), adjusted for actual sample preparation data and moisture content, where applicable.
U	The analyte was analyzed for but not detected to the level shown, adjusted for actual sample preparation data and moisture content, where applicable.
MRL	Method Reporting Limit. The MRL is roughly equivalent to the practical quantitation limit (PQL) and is based on the low point of the calibration curve, when applicable, sample preparation factor, dilution factor, and, in the case of soil samples, moisture content.

ENVIRONMENTAL CONSERVATION LABORATORIES CHAIN-OF-CUSTODY RECORD

10775 Central Port Dr.
Orlando, FL 32824
(407) 826-5314 Fax (407) 850-6945

4810 Executive Park Court, Suite 211
Jacksonville, FL 32216-6069
(904) 296-3007 Fax (904) 296-6210

1015 Passport Way
Cary, NC 27513
(919) 677-1669 Fax (919) 677-9845

Page 1 of 2

Client Name	Golder Associates, Inc. (GO007)
Address	The Wingate Building 4900 Koger Blvd., Suite 140
City/ST/Zip	Greensboro, NC 27407
Tel	(336) 852-4903
Fax	(336) 852-4904
Sampler(s) Name, Affiliation (Print)	Client R. Stringfellow / K. Higgs
Sampler(s) Signature	Ryan [signature]
Project Number	053-6620008.100
Project Name/Desc	Republic-East Carolina Landfill
PO # / Billing Info	
Reporting Contact	Dusty Reedy
Billing Contact	Rachel Kirkman
Facility # (if required)	

Requested Analyses: 8260B Appendix 1; Ag,As,Ba,Be,Cd,Co,Cr,Cu,Ni,Pb,Sb,Se,Tl,V,Zn

Requested Turnaround Times

Note : Rush requests subject to acceptance by the facility

✓ Standard

___ Expedited

Due ___/___/___

Lab Workorder: C717605

Preservation (See Codes) (Combine as necessary)

Item #	Sample ID (Field Identification)	Collection Date	Collection Time	Comp / Grab	Matrix (see codes)	Total # of Containers			Sample Comments
	0803-GW2	01-14-08	11:44	G	Water	4	X	X	NC App I (Metals & VOAs)
	0803-GW7 (MS/MSD)	01-14-08	14:04	G	Water	7	X	X	
	0803-GW8	01-15-08	10:08	G	Water	4	X	X	
	0803-GW9	01-15-08	9:28	G	Water	4	X	X	
	0803-GW10	01-15-08	8:30	G	Water	4	X	X	
	0803-GW11	01-14-08	16:03	G	Water	4	X	X	
	0803-GW13	01-14-08	15:24	G	Water	4	X	X	
	0803-GW14	01-14-08	13:11	G	Water	4	X	X	
	0803-GW15	01-14-08	14:49	G	Water	4	X	X	
	0803-GW16R	01-15-08	10:49	G	Water	4	X	X	
	0803-PW1	01-15-08	12:50	G	Water	4	X	X	
	0803-Field Blank	01-15-08	14:00	G	Water	4	X	X	

<-- Total # of Containers

Sample Kit Prepared By	Date/Time	Relinquished By	Date/Time	Received By	Date/Time
DJW	12/19/07	Ryan [signature]	01/15/08 16:45		
		Relinquished By	Date/Time	Received By	Date/Time
		Relinquished By	Date/Time	Received By: Robin Biz	Date/Time 1/15/08 1720

Comments
1. Please provide a "Level 2" data report.
2. Unit rates per "Basic Ordering Agreement For Laboratory Services" dated April 9, 2004 & 2006 ENCO MSA Price List
3. Need 7-10 Day TAT w/ no surcharge
4. Estimated Fee: $1680.00 (Jan/July rates)

Cooler #'s & Temps on Receipt: C-365 2.0°C

Condition Upon Receipt: ___ Acceptable ___ Unacceptable

Matrix : GW-Groundwater SO-Soil SE-Sediment SW-Surface Water WW-Wastewater A-Air O-Other (detail in comments)

Preservation: I-Ice H-HCl N-HNO3 S-H2SO4 NO-NaOH O-Other (detail in comments)

Note : All samples submitted to ENCO Labs are in accordance with the terms and conditions listed on the reverse of this form, unless prior written agreements exist

LOA ~~Approved By~~ RS per Ryan Stringfellow: Ryan [signature] Approved By [signature]

ENVIRONMENTAL CONSERVATION LABORATORIES CHAIN-OF-CUSTODY RECORD

10775 Central Port Dr.
Orlando, FL 32824
(407) 826-5314 Fax (407) 850-6945

4810 Executive Park Court, Suite 211
Jacksonville, FL 32216-6069
(904) 296-3007 Fax (904) 296-6210

1015 Passport Way
Cary, NC 27513
(919) 677-1669 Fax (919) 677-9846

Client Name: Golder Associates, Inc. (GO007)	Project Number: 053-6620008.100
Address: The Wingate Building 4900 Koger Blvd., Suite 140	Project Name/Desc: Republic-East Carolina Landfill
City/ST/Zip: Greensboro, NC 27407	PO # / Billing Info:
Tel: (336) 852-4903 / Fax: (336) 852-4904	Reporting Contact: Dusty Reedy
Sampler(s) Name, Affiliation (Print): Client R. Stringfellow / K. Higgs	Billing Contact: Rachel Kirkman
Sampler(s) Signature: Ryan Stringfellow	Facility # (if required):

Requested Analyses: 8260B Appendix 1; Ag,As,Ba,Be,Cd,Co,Cr,Cu,Ni,Pb,Sb,Se,Tl,V,Zn

Requested Turnaround Times

Note : Rush requests subject to acceptance by the facility

✓ Standard

___ Expedited

Due ___/___/___

Lab Workorder: C717605

Preservation (See Codes) (Combine as necessary)

Item #	Sample ID (Field Identification)	Collection Date	Collection Time	Comp / Grab	Matrix (see codes)	Total # of Containers	8260B Appendix 1	Ag,As,Ba,Be,Cd,Co,Cr,Cu,Ni,Pb,Sb,Se,Tl,V,Zn								Sample Comments
	0803-Trip Blank	—	—	G	Water	2	X									NC App I VOAs Only

<-- Total # of Containers

Sample Kit Prepared By	Date/Time	Relinquished By	Date/Time	Received By	Date/Time
DSW	12/19/07	Ryan Stringfellow	1/15/08 16:45		
		Relinquished By	Date/Time	Received By	Date/Time
		Relinquished By	Date/Time	Received By: Robert Bi	Date/Time 1/15/08 1720

Comments
1. Please provide a "Level 2" data report.
2. Units rates per "Basic Ordering Agreement for Laboratory Services" dated April 9, 2001 & 2006 ENCO MSA Price List
3. Need 7-10 Day TAT with no surcharge
4. Estimated Fee = $1680.00 (June/July rates)

Cooler #'s & Temps on Receipt: C-365 2.0 °C

Condition Upon Receipt: ✓ Acceptable ___ Unacceptable

Matrix : GW-Groundwater SO-Soil SE-Sediment SW-Surface Water WW-Wastewater A-Air O-Other (detail in comments)

Preservations: I-Ice H-HCl N-HNO3 S-H2SO4 NO-NaOH O-Other (detail in comments)

Note : All samples submitted to ENCO Labs are in accordance with the terms and conditions listed on the reverse of this form, unless prior written agreements exist.

LOA per Ryan Stringfellow: Ryan Stringfellow Approved By: Stephanie

WORK ORDER

Printed: 1/25/2008 3:51:50PM

C717605

ENCO Cary

Sample Receipt Conditions

Client:	**Golder Associates, Inc. (GO007)**	**Lab Project Mgr:**	**Stephanie Franz**
Project:	**Republic-East Carolina Landfill**	**Project Number:**	**053-6620008.100**
PO #:			

Report To:

Golder Associates, Inc. (GO007)
Dusty Reedy
The Wingate Building 4900 Koger Blvd., Suite 140
Greensboro, NC 27407
Phone: (336) 852-4903
Fax: (336) 852-4904

Invoice To:

Golder Associates, Inc. (GO007)
Rachel Kirkman
The Wingate Building 4900 Koger Blvd., Suite 140
Greensboro, NC 27407
Phone :(336) 852-4903
Fax: (336) 852-4904

Received By:	Robin C Bridges	Date Received:	15-Jan-08 17:20
Logged In By:	Briana J Gregory	Date Logged In:	16-Jan-08 09:25

Work Order Comments:

C-365 received at 2.0°C

Containers Intact	Y	Containers Properly Preserved	Y	Proper Containers Received	Y	All Samples in PreLog Received	Y	COC/Labels Agree	Y
Custody Seals Intact	Y	Volatile Containers Preserved	Y	Volatile Containers Headspace Free	Y	Aqueous Samples Checked for Residual Cl	N	Received On Ice	Y

GOLDER ASSOCIATES NC, INC.
QUALITY ASSURANCE & QUALITY CONTROL
LABORATORY DATA REVIEW

Project Name: East Carolina Landfill-GW

Project Reference Number: 053-6620008.100

Sampling Event Date: January 14-15, 2008

Review Date: January 29, 2008 *Initials:*JD

Review Date: January 31, 2008 *Initials:*RS

Report #: C717605

Person(s) performing the review are to initial each item on this form as acknowledgement of data acceptance, or as acknowledgement of a review issue. In the case of the latter, a brief explanation should follow the applicable item.

Golder Associates Inc. has reviewed the laboratory certificates of analysis, chain-of-custody form, and laboratory provided sample group quality assurance and quality control data for the above referenced sample group to identify potential bias or inaccuracy, in general accordance with the following United States Environmental Protection Agency documents:

- Region III Modifications to Functional Guidelines for Organic Data Review Multi-Media, Multi-Concentration, September 1994;
- Region III Modifications to the Laboratory Data Validation Functional Guidelines for Evaluating Inorganic Analyses, April 1993; and
- Laboratory Data Validation Functional Guidelines for Evaluating Inorganic Analyses, July 1998.

COMPLIANCE ANALYTE LIST(S) (check all that apply)

___ NC Closed Facility List (.500 Rules)

___ NC C & D List (New Rules)

X NC Appendix I

___ NC Appendix I + Detects

___ NC Appendix II

___ NC Subtitle D Leachate List

Other: _____

1.0 CHAIN OF CUSTODY (COC) REVIEW

JD RS COC was properly signed by all parties.

JD RS Correct project name and number are on the form.

JD RS Sample receipt condition at laboratory was acceptable.

JD RS Each sample and blank submitted for analysis appears in the report.

Notes: _____

2.0 SAMPLE HOLDING TIMES

JD RS Holding times for extraction and/or analysis were met for each analytical Method (see below for reference).

Notes: _____

Review Criteria		
Method	**Analytes**	**Holding Time**
SW-846 Method 8260 and 8011	VOCs	14 days
SW-846 Methods 8270, 8080, 8081, 8082, and 8151	SVOCs, PCBs, pesticides and herbicides	7 days for extraction, 40 days from extraction for analysis
SW-846 Methods 6000 and 7000 Series	Metals except mercury	6 months (no temperature requirements)
SW-846 Method 7470	Mercury	28 days
SW-846 Method 376.1	Sulfide	7 days
SW-846 Method 9010	Cyanide	14 days
EPA Method 300	Nitrate/Sulfate	48 hours/28 days
EPA Method 405.1	BOD	48 hours
EPA Method 410.4	COD	28 days
EPA Method 365.4	Phosphorous	28 days

3.0 LABORATORY QUALITY CONTROL REVIEW

JD RS Laboratory analyzed at least one internal blank for each method, where applicable.

JD RS Laboratory blank is interference-free.

- ***Copper and vanadium were detected in method blank 8A17001-BLK1 at estimated concentrations of 0.70 µg/L (J) and 1.0 µg/L (J), respectively.***

JD RS Surrogate recoveries are provided for each analytical method, where applicable.

JD RS Surrogate recoveries for each method are within the acceptable limits (i.e., at least 50% of the surrogates were within range).

JD RS MS/MSD/LCS data results are provided for each analytical method.

JD RS MS/MSD/LCS recoveries for each method are within the acceptable limits (i.e., at least 1 of the 3 were within range).

Notes: _____

4.0 ANALYTE LISTS/METHODS

JD RS The proper number of constituents are present for each analyte list as identified above (including detects where applicable).

JD RS Proper EPA SW-846 analytical methods were used for analysis.

Notes: _____

5.0 DATA REPORTING

JD RS All analytical reporting associated with the event was performed by the contracted lab.

JD RS Trip, field and/or equipment, and laboratory blank results have all been reported. All detects for blanks are listed below by constituent. All laboratory method blanks, if any, have been 'flagged' with a 'B' where detected in other samples as appropriate and a laboratory narrative was provided. If the sample was flagged by the laboratory and is not within 5X of the concentration in the blank (or 10X for commonly detected laboratory contaminants-acetone, methylene chloride and phthalates), list below with explanation if flags should be removed. If flags need to be added for samples, also list below.

Method Blank:

- ***Copper and vanadium were detected in method blank 8A17001-BLK1 at estimated concentrations of 0.70 µg/L (J) and 1.0 µg/L (J), respectively. "B" flags are needed for copper concentrations in GW-7, -8, -9, -11, -13, -15, -16R and PW-1. "B" flags are needed for vanadium concentrations in GW-2, -8, -9, -11, -14 and -15.***

Field Blank:

- ***Barium and zinc were detected in the field blank at estimated concentrations of 0.30 µg/L (J) and 1.3 µg/L (J), respectively. "B" flags are needed for concentrations of zinc in GW-7, -8, -9, -10, -11, -13, -14 and -15, plus SW-4 in the surface water sample report C717603.***

JD RS It is clear from the laboratory report that samples have or have not been diluted during analysis, and if the samples have been diluted, the result is reported as a multiple of the dilution (e.g., a sample diluted 10x resulting in an analytical detection of 1.0 should be reported as 10). Those that have been diluted are listed below with the dilution factor.

JD RS The report provides the reporting limit for each constituent.

JD RS The results were reported at or below their proper reporting limits (i.e., MDLs with

SWSLs reported). Those that are not reported correctly are listed below (by constituent) with the proper reporting limit listed beside them. State if the reporting limit error is due to dilutions.

JD RS No organic constituents were reported above their respective SWSLs, and no inorganic or organic constituents were reported above their respective NC 2L Drinking Water Standards/GPS in wells, or field/equipment/trip blanks, or above applicable surface water standards in surface water points.

GW-2:

- ***Barium detected above SWSL at 405 µg/L (SWSL = 100)***
- ***Cobalt detected above SWSL at 11.3 µg/L (J) (SWSL = 10)***
- ***Zinc detected above SWSL at 13.3 µg/L (SWSL = 10)***

GW-7:

- ***Barium detected above SWSL at 129 µg/L (SWSL = 100)***
- ***Beryllium detected above SWSL at 1.5 µg/L (SWSL = 1)***
- ***Cobalt detected above SWSL at 35.1 µg/L (SWSL = 10)***

GW-8:

- ***Barium detected above SWSL at 127 µg/L (SWSL = 100)***

GW-13:

- ***Barium detected above SWSL at 291 µg/L (SWSL = 100)***

GW-15:

- ***Barium detected above SWSL at 117 µg/L (SWSL = 100)***

GW-16R:

- ***Zinc detected above SWSL at 13.6 µg/L (SWSL = 10)***

PW-1:

- ***Zinc detected above SWSL at 81.5 µg/L (SWSL = 10)***

JD RS No inorganic and organic constituents were detected in a well or surface water point at concentrations outside of their historical range (more than 5X previous concentrations or first-time detections).

GW-2:

- ***Chromium detected for first time (2.6 µg/L) (J)***
- ***Copper detected for first time (4.7 µg/L) (J)***
- ***Nickel detected at highest historical concentration (11.0 µg/L) (J)***
- ***Selenium detected for first time (2.3 µg/L) (J)***
- ***Silver detected for first time (2.1 µg/L) (J)***
- ***Thallium detected at highest historical concentration (0.077 µg/L) (J)***

- ***Vanadium detected for first time (1.6 µg/L) (J)***

GW-7:

- ***Thallium detected at highest concentration (0.069 µg/L) (J)***

GW-8:

- ***Cobalt detected at highest concentration (4.2 µg/L) (J)***
- ***Copper detected for first time (1.3 µg/L) (J)***
- ***Selenium detected for first time (2.0 µg/L) (J)***
- ***Vanadium detected for first time (1.1 µg/L) (J)***

GW-9:

- ***Arsenic detected for first time (2.7 µg/L) (J)***
- ***Cobalt detected for first time (3.2 µg/L) (J)***
- ***Copper detected for first time (1.3 µg/L) (J)***
- ***Silver detected for first time (3.1 µg/L) (J)***
- ***Vanadium detected at highest concentration (2.7 µg/L) (J)***

GW-10:

- ***Cobalt detected for first time (3.8 µg/L) (J)***
- ***Nickel detected for first time (2.0 µg/L) (J)***

GW-11:

- ***Arsenic detected at highest concentration (2.3 µg/L) (J)***
- ***Chromium detected at highest concentration (5.9 µg/L) (J)***
- ***Cobalt detected for first time (2.0 µg/L) (J)***
- ***Copper detected for first time (1.0 µg/L) (J)***
- ***Nickel detected for first time (3.2 µg/L) (J)***
- ***Vanadium detected for first time (2.0 µg/L) (J)***

GW-13:

- ***Barium detected at highest concentration (291 µg/L)***
- ***Chromium detected for first time (3.8 µg/L) (J)***
- ***Copper detected for first time (0.80 µg/L) (J)***
- ***Nickel detected at highest concentration (4.7 µg/L) (J)***
- ***Thallium detected at highest concentration (0.063 µg/L) (J)***

GW-14:

- ***Barium detected at highest concentration (37.1 µg/L) (J)***
- ***Nickel detected at highest concentration (3.6 µg/L) (J)***

GW-15:

- ***Barium detected at highest concentration (117 µg/L)***
- ***Cobalt detected at highest concentration (3.4 µg/L) (J)***
- ***Copper detected for first time (0.80 µg/L) (J)***
- ***Nickel detected at highest concentration (3.8 µg/L) (J)***
- ***Selenium detected for first time (2.3 µg/L) (J)***
- ***Silver detected for first time (2.1 µg/L) (J)***

GW-16R:

- ***This is the first sampling of GW-16R; barium, chloroform, cobalt, copper and zinc were detected.***

JD RS Other report issues/Communications with laboratory/etc.:

Notes: _____

Environmental Conservation Laboratories, Inc.
102-A Woodwinds Industrial Court
Cary NC, 27511
Phone: 919.467.3090 FAX: 919.467.3515
www.encolabs.com

Wednesday, January 30, 2008

Golder Associates, Inc. (GO007)

Attn: Dusty Reedy

The Wingate Building 4900 Koger Blvd., Suite 140

Greensboro, NC 27407

RE: Laboratory Results for
Project Number: 053-6620008.100, Project Name/Desc: Republic-East Carolina Landfill leachate
ENCO Workorder: C717604

Dear Dusty Reedy,

Enclosed is a copy of your laboratory report for test samples received by our laboratory on Tuesday, January 15, 2008.

Unless otherwise noted in an attached project narrative, all samples were received in acceptable condition and processed in accordance with the referenced methods/procedures. Results for these procedures apply only to the samples as submitted.

The analytical results contained in this report are in compliance with NELAC standards, except as noted in the project narrative. This report shall not be reproduced except in full, without the written approval of the Laboratory.

This report contains only those analyses performed by Environmental Conservation Laboratories. Unless otherwise noted, all analyses were performed at ENCO Cary. Data from outside organizations will be reported under separate cover.

If you have any questions or require further information, please do not hesitate to contact me.

Sincerely,

Stephanie Franz

Project Manager

Enclosure(s)

The total number of pages in this report, including this page is 24.

PROJECT NARRATIVE

Date: 30 January 2008
Client: Golder Associates
Project: Republic-East Carolina Landfill Leachate
Lab ID: C717604

Overview

Environmental Conservation Laboratories, Inc. analyzed all samples submitted in accordance with the methods referenced in the laboratory report. Any particular difficulties encountered during sample handling by Environmental Conservation Laboratories, Inc. will be discussed in the QC Remarks section below.

Quality Control Samples

The Method Blank for the Nitrite as N analysis has a low-level detection (less than half of the MRL). The associated sample should be considered to have a possible high bias. However, the concentration in the associated sample is less than the MRL.

The spike recovery of the MS and MSD for the COD analysis could not be accurately calculated due to the high concentration of analyte in the source sample. The QC batch was approved based on acceptable LCS recoveries.

Quality Control Remarks

The precision (%RPD) for the Duplicate TSS analysis was outside of control limits due to the low analyte concentration found in the sample.

Other Comments

All samples received under this work order arrived in acceptable conditions. The samples were not checked for residual chlorine, as it is a not a requirement.

The analytical data presented in this report are consistent with the methods as referenced in the analytical report. Any exceptions or deviations are noted in the QC remarks section of this narrative.

Released By:
Environmental Conservation Laboratories, Inc.

Stephanie Franz
Project Manager

www.encolabs.com

SAMPLE SUMMARY/LABORATORY CHRONICLE

Client ID: 0803-Leachate	Lab ID: C717604-01	Sampled: 01/15/08 13:20	Received: 01/15/08 17:20

Parameter	Hold Date/Time(s)			Prep Date/Time(s)		Analysis Date/Time(s)	
EPA 160.2	01/22/08			01/16/08	10:30	1/18/2008	09:36
EPA 1664	02/12/08			01/22/08	07:27	1/23/2008	07:48
EPA 300.0	02/12/08			01/21/08	10:45	1/21/2008	17:54
EPA 351.2	02/12/08			01/23/08	10:12	1/24/2008	15:22
EPA 353.2	01/17/08	13:20		01/17/08	10:20	1/17/2008	10:55
EPA 353.2	02/12/08			01/20/08	10:02	1/20/2008	17:18
EPA 353.2	02/12/08			01/29/08	10:23	1/29/2008	10:53
EPA 365.4	02/12/08			01/23/08	10:14	1/25/2008	10:03
EPA 405.1	01/17/08	13:20	01/21/08	01/16/08	18:33	1/21/2008	14:13
EPA 410.4	02/12/08			01/24/08	11:40	1/24/2008	16:40
EPA 420.1	02/12/08			01/28/08	10:12	1/29/2008	15:15
EPA 6010B	07/13/08			01/16/08	10:17	1/23/2008	15:40
EPA 6020	07/13/08			01/16/08	10:23	1/17/2008	11:22
EPA 7470A	02/12/08			01/24/08	09:13	1/25/2008	11:43
EPA 8260B	01/29/08			01/15/08	15:52	1/16/2008	19:51
EPA 9014	01/29/08			01/18/08	10:33	1/21/2008	10:51

www.encolabs.com

NORTH CAROLINA SWS SAMPLE DETECTION SUMMARY

Client ID: 0803-Leachate **Lab ID:** C717604-01

Analyte	Results	Flag	DF	MDL	MRL	NC SWSL	Units	Method	Notes
2-Butanone	7800		50	28	250	100	ug/L	EPA 8260B	
Acetone	6700		50	45	250	100	ug/L	EPA 8260B	
Antimony	9.02		1	0.68	2.00	6	ug/L	EPA 6020	
Arsenic	21.8		1	2.0	10.0	10	ug/L	EPA 6010B	
Barium	645		1	0.20	10.0	100	ug/L	EPA 6010B	
Biochemical Oxygen Demand	620		1	2.0	2.0	NE	mg/L	EPA 405.1	
Chemical Oxygen Demand	1600		1	20	20	NE	mg/L	EPA 410.4	
Cobalt	23.0		1	2.0	10.0	10	ug/L	EPA 6010B	
Ethylbenzene	29		50	8.5	50	1	ug/L	EPA 8260B	
Nickel	91.6		1	2.0	10.0	50	ug/L	EPA 6010B	
Nitrate as N	0.025	J	1	0.010	0.10	10	mg/L	EPA 353.2	
Nitrate/Nitrite as N	0.044	J	1	0.022	0.10	NE	mg/L	EPA 353.2	
Nitrite as N	0.019	J	1	0.010	0.10	1	mg/L	EPA 353.2	
Phosphorus	2.6		1	0.020	0.030	NE	mg/L	EPA 365.4	
Selenium	3.2	J	1	2.0	10.0	10	ug/L	EPA 6010B	
Sulfate	5.6	J	2	0.06	4.0	250	mg/L	EPA 300.0	
Toluene	35		50	7.5	50	1	ug/L	EPA 8260B	
Total Suspended Solids	26		1	1.0	1.0	NE	mg/L	EPA 160.2	
Vanadium	55.4		1	1.0	10.0	25	ug/L	EPA 6010B	
Xylenes (Total)	42		50	10	50	5	ug/L	EPA 8260B	
Zinc	15.2		1	1.0	10.0	10	ug/L	EPA 6010B	

www.encolabs.com

ANALYTICAL RESULTS

Description: 0803-Leachate
Matrix: Water
Project: Republic-East Carolina Landfill leachate

Lab Sample ID: C717604-01
Sampled: 01/15/08 13:20
Sampled By: K. Higgs/R. Stringfellow

Received: 01/15/08 17:20
Work Order: C717604

Volatile Organic Compounds by GCMS

** - ENCO Cary certified analyte [NC 591]*

Analyte [CAS Number]	Results	Flag	Units	DF	MDL	MRL	NC SWSL	Method	Analyzed	By	Notes
1,1,1,2-Tetrachloroethane [630-20-6] *	8.0	U	ug/L	50	8.0	50	5	EPA 8260B	01/16/08 19:51	jkg	
1,1,1-Trichloroethane [71-55-6] *	12	U	ug/L	50	12	50	1	EPA 8260B	01/16/08 19:51	jkg	
1,1,2,2-Tetrachloroethane [79-34-5] *	14	U	ug/L	50	14	50	3	EPA 8260B	01/16/08 19:51	jkg	
1,1,2-Trichloroethane [79-00-5] *	12	U	ug/L	50	12	50	1	EPA 8260B	01/16/08 19:51	jkg	
1,1-Dichloroethane [75-34-3] *	4.5	U	ug/L	50	4.5	50	5	EPA 8260B	01/16/08 19:51	jkg	
1,1-Dichloroethene [75-35-4] *	7.0	U	ug/L	50	7.0	50	5	EPA 8260B	01/16/08 19:51	jkg	
1,2,3-Trichloropropane [96-18-4] *	16	U	ug/L	50	16	50	1	EPA 8260B	01/16/08 19:51	jkg	
1,2-Dibromo-3-chloropropane [96-12-8] *	9.5	U	ug/L	50	9.5	50	13	EPA 8260B	01/16/08 19:51	jkg	
1,2-Dibromoethane [106-93-4] *	9.5	U	ug/L	50	9.5	50	1	EPA 8260B	01/16/08 19:51	jkg	
1,2-Dichlorobenzene [95-50-1] *	8.5	U	ug/L	50	8.5	50	5	EPA 8260B	01/16/08 19:51	jkg	
1,2-Dichloroethane [107-06-2] *	18	U	ug/L	50	18	50	1	EPA 8260B	01/16/08 19:51	jkg	
1,2-Dichloropropane [78-87-5] *	9.0	U	ug/L	50	9.0	50	1	EPA 8260B	01/16/08 19:51	jkg	
1,4-Dichlorobenzene [106-46-7] *	7.5	U	ug/L	50	7.5	50	1	EPA 8260B	01/16/08 19:51	jkg	
2-Butanone [78-93-3] *	**7800**		ug/L	50	28	250	100	EPA 8260B	01/16/08 19:51	jkg	
2-Hexanone [591-78-6] *	12	U	ug/L	50	12	250	50	EPA 8260B	01/16/08 19:51	jkg	
4-Methyl-2-pentanone [108-10-1] *	18	U	ug/L	50	18	250	100	EPA 8260B	01/16/08 19:51	jkg	
Acetone [67-64-1] *	**6700**		ug/L	50	45	250	100	EPA 8260B	01/16/08 19:51	jkg	
Acrylonitrile [107-13-1] *	100	U	ug/L	50	100	250	200	EPA 8260B	01/16/08 19:51	jkg	
Benzene [71-43-2] *	6.0	U	ug/L	50	6.0	50	1	EPA 8260B	01/16/08 19:51	jkg	
Bromochloromethane [74-97-5] *	9.5	U	ug/L	50	9.5	50	3	EPA 8260B	01/16/08 19:51	jkg	
Bromodichloromethane [75-27-4] *	9.5	U	ug/L	50	9.5	20	1	EPA 8260B	01/16/08 19:51	jkg	
Bromoform [75-25-2] *	18	U	ug/L	50	18	50	3	EPA 8260B	01/16/08 19:51	jkg	
Bromomethane [74-83-9] *	10	U	ug/L	50	10	50	10	EPA 8260B	01/16/08 19:51	jkg	
Carbon disulfide [75-15-0] *	6.0	U	ug/L	50	6.0	250	100	EPA 8260B	01/16/08 19:51	jkg	
Carbon tetrachloride [56-23-5] *	19	U	ug/L	50	19	50	1	EPA 8260B	01/16/08 19:51	jkg	
Chlorobenzene [108-90-7] *	8.0	U	ug/L	50	8.0	50	3	EPA 8260B	01/16/08 19:51	jkg	
Chloroethane [75-00-3] *	20	U	ug/L	50	20	50	10	EPA 8260B	01/16/08 19:51	jkg	
Chloroform [67-66-3] *	8.0	U	ug/L	50	8.0	50	5	EPA 8260B	01/16/08 19:51	jkg	
Chloromethane [74-87-3] *	9.0	U	ug/L	50	9.0	50	1	EPA 8260B	01/16/08 19:51	jkg	
cis-1,2-Dichloroethene [156-59-2] *	7.0	U	ug/L	50	7.0	50	5	EPA 8260B	01/16/08 19:51	jkg	
cis-1,3-Dichloropropene [10061-01-5] *	8.0	U	ug/L	50	8.0	10	1	EPA 8260B	01/16/08 19:51	jkg	
Dibromochloromethane [124-48-1] *	9.0	U	ug/L	50	9.0	50	3	EPA 8260B	01/16/08 19:51	jkg	
Dibromomethane [74-95-3] *	7.0	U	ug/L	50	7.0	50	10	EPA 8260B	01/16/08 19:51	jkg	
Ethylbenzene [100-41-4] *	**29**		ug/L	50	8.5	50	1	EPA 8260B	01/16/08 19:51	jkg	
Iodomethane [74-88-4] *	12	U	ug/L	50	12	100	10	EPA 8260B	01/16/08 19:51	jkg	
Methylene chloride [75-09-2] *	4.4	U	ug/L	50	4.4	50	1	EPA 8260B	01/16/08 19:51	jkg	
Styrene [100-42-5] *	6.0	U	ug/L	50	6.0	50	1	EPA 8260B	01/16/08 19:51	jkg	
Tetrachloroethene [127-18-4] *	12	U	ug/L	50	12	50	1	EPA 8260B	01/16/08 19:51	jkg	
Toluene [108-88-3] *	**35**		ug/L	50	7.5	50	1	EPA 8260B	01/16/08 19:51	jkg	
trans-1,2-Dichloroethene [156-60-5] *	5.0	U	ug/L	50	5.0	50	5	EPA 8260B	01/16/08 19:51	jkg	
trans-1,3-Dichloropropene [10061-02-6] *	9.0	U	ug/L	50	9.0	10	1	EPA 8260B	01/16/08 19:51	jkg	
trans-1,4-Dichloro-2-butene [110-57-6] *	30	U	ug/L	50	30	50	100	EPA 8260B	01/16/08 19:51	jkg	
Trichloroethene [79-01-6] *	12	U	ug/L	50	12	50	1	EPA 8260B	01/16/08 19:51	jkg	

www.encolabs.com

Description:	0803-Leachate	**Lab Sample ID:**	C717604-01	**Received:**	01/15/08 17:20
Matrix:	Water	**Sampled:**	01/15/08 13:20	**Work Order:**	C717604
Project:	Republic-East Carolina Landfill leachate	**Sampled By:**	K. Higgs/R. Stringfellow		

Volatile Organic Compounds by GCMS

** - ENCO Cary certified analyte [NC 591]*

Analyte [CAS Number]	Results	Flag	Units	DF	MDL	MRL	NC SWSL	Method	Analyzed	By	Notes
Trichlorofluoromethane [75-69-4] *	8.0	U	ug/L	50	8.0	50	1	EPA 8260B	01/16/08 19:51	jkg	
Vinyl acetate [108-05-4] *	9.5	U	ug/L	50	9.5	100	50	EPA 8260B	01/16/08 19:51	jkg	
Vinyl chloride [75-01-4] *	7.5	U	ug/L	50	7.5	50	1	EPA 8260B	01/16/08 19:51	jkg	
Xylenes (Total) [1330-20-7]	**42**		ug/L	50	10	50	5	EPA 8260B	01/16/08 19:51	jkg	

Surrogates	*Results*	*DF*	*Spike Lvl*	*% Rec*	*% Rec Limits*	*Batch*	*Method*	*Analyzed*	*By*	Notes
4-Bromofluorobenzene	*45*	*1*	*50.0*	*89 %*	*69-120*	*8A16004*	*EPA 8260B*	*01/16/08 19:51*	*jkg*	
Dibromofluoromethane	*53*	*1*	*50.0*	*106 %*	*61-120*	*8A16004*	*EPA 8260B*	*01/16/08 19:51*	*jkg*	
Toluene-d8	*44*	*1*	*50.0*	*88 %*	*75-99*	*8A16004*	*EPA 8260B*	*01/16/08 19:51*	*jkg*	

www.encolabs.com

Description: 0803-Leachate
Matrix: Water
Project: Republic-East Carolina Landfill leachate

Lab Sample ID: C717604-01
Sampled: 01/15/08 13:20
Sampled By: K. Higgs/R. Stringfellow

Received: 01/15/08 17:20
Work Order: C717604

Metals by EPA 6000/7000 Series Methods

** - ENCO Cary certified analyte [NC 591]*

Analyte [CAS Number]	Results	Flag	Units	DF	MDL	MRL	NC SWSL	Method	Analyzed	By	Notes
Antimony [7440-36-0] *	**9.02**		ug/L	1	0.68	2.00	6	EPA 6020	01/17/08 11:22	JDH	
Arsenic [7440-38-2] *	**21.8**		ug/L	1	2.0	10.0	10	EPA 6010B	01/23/08 15:40	VLO	
Barium [7440-39-3] *	**645**		ug/L	1	0.20	10.0	100	EPA 6010B	01/23/08 15:40	VLO	
Beryllium [7440-41-7] *	0.70	U	ug/L	1	0.70	1.00	1	EPA 6010B	01/23/08 15:40	VLO	
Cadmium [7440-43-9] *	0.50	U	ug/L	1	0.50	1.00	1	EPA 6010B	01/23/08 15:40	VLO	
Chromium [7440-47-3] *	2.0	U	ug/L	1	2.0	10.0	10	EPA 6010B	01/23/08 15:40	VLO	
Cobalt [7440-48-4] *	**23.0**		ug/L	1	2.0	10.0	10	EPA 6010B	01/23/08 15:40	VLO	
Copper [7440-50-8] *	0.60	U	ug/L	1	0.60	10.0	10	EPA 6010B	01/23/08 15:40	VLO	
Lead [7439-92-1] *	2.0	U	ug/L	1	2.0	10.0	10	EPA 6010B	01/23/08 15:40	VLO	
Mercury [7439-97-6] *	0.11	U	ug/L	1	0.11	0.20	0.2	EPA 7470A	01/25/08 11:43	MPL	
Nickel [7440-02-0] *	**91.6**		ug/L	1	2.0	10.0	50	EPA 6010B	01/23/08 15:40	VLO	
Selenium [7782-49-2] *	**3.2**	J	ug/L	1	2.0	10.0	10	EPA 6010B	01/23/08 15:40	VLO	
Silver [7440-22-4] *	2.0	U	ug/L	1	2.0	10.0	10	EPA 6010B	01/23/08 15:40	VLO	
Thallium [7440-28-0] *	0.036	U	ug/L	1	0.036	1.00	5.5	EPA 6020	01/17/08 11:22	JDH	
Vanadium [7440-62-2] *	**55.4**		ug/L	1	1.0	10.0	25	EPA 6010B	01/23/08 15:40	VLO	
Zinc [7440-66-6] *	**15.2**		ug/L	1	1.0	10.0	10	EPA 6010B	01/23/08 15:40	VLO	

www.encolabs.com

Description: 0803-Leachate
Matrix: Water
Project: Republic-East Carolina Landfill leachate

Lab Sample ID: C717604-01
Sampled: 01/15/08 13:20
Sampled By: K. Higgs/R. Stringfellow

Received: 01/15/08 17:20
Work Order: C717604

Classical Chemistry Parameters

** - ENCO Cary certified analyte [NC 591]*

Analyte [CAS Number]	Results	Flag	Units	DF	MDL	MRL	NC SWSL	Method	Analyzed	By	Notes
Biochemical Oxygen Demand [NA] *	**620**		mg/L	1	2.0	2.0	NE	EPA 405.1	01/21/08 14:13	GPW	
Chemical Oxygen Demand [NA] *	**1600**		mg/L	1	20	20	NE	EPA 410.4	01/24/08 16:40	CKN	
Cyanide (total) [57-12-5] *	0.0040	U	mg/L	1	0.0040	0.0050	10	EPA 9014	01/21/08 10:51	PEV	
Nitrate as N [14797-55-8] *	**0.025**	J	mg/L	1	0.010	0.10	10	EPA 353.2	01/29/08 10:53	AJ	
Nitrate/Nitrite as N [NA] *	**0.044**	J	mg/L	1	0.022	0.10	NE	EPA 353.2	01/20/08 17:18	PEV	
Nitrite as N [14797-65-0] *	**0.019**	J	mg/L	1	0.010	0.10	1	EPA 353.2	01/17/08 10:55	PEV	
Total Suspended Solids [NA] *	**26**		mg/L	1	1.0	1.0	NE	EPA 160.2	01/18/08 09:36	FLT	

www.encolabs.com

Description:	0803-Leachate	**Lab Sample ID:**	C717604-01	**Received:**	01/15/08 17:20
Matrix:	Water	**Sampled:**	01/15/08 13:20	**Work Order:**	C717604
Project:	Republic-East Carolina Landfill leachate	**Sampled By:**	K. Higgs/R. Stringfellow		

Classical Chemistry Parameters

** - ENCO Orlando certified analyte [NC 424]*

Analyte [CAS Number]	Results	Flag	Units	DF	MDL	MRL	NC SWSL	Method	Analyzed	By	Notes
Phenolics [NA] *	**1.1**		mg/L	2	0.03	0.10		EPA 420.1	01/29/08 15:15	CAS	
Phosphorus [7723-14-0] *	**2.6**		mg/L	1	0.020	0.030	NE	EPA 365.4	01/25/08 10:03	NS	
Sulfate [14808-79-8] *	**5.6**	J	mg/L	2	0.06	4.0	250	EPA 300.0	01/21/08 17:54	RSA	
Total Kjeldahl Nitrogen [NA] *	**560**		mg/L	500	22	25		EPA 351.2	01/24/08 15:22	NS	

www.encolabs.com

Description:	0803-Leachate	**Lab Sample ID:**	C717604-01	**Received:**	01/15/08 17:20
Matrix:	Water	**Sampled:**	01/15/08 13:20	**Work Order:**	C717604
Project:	Republic-East Carolina Landfill leachate	**Sampled By:**	K. Higgs/R. Stringfellow		

Classical Chemistry Parameters

** - ENCO Jacksonville certified analyte [NC 442]*

Analyte [CAS Number]	Results	Flag	Units	DF	MDL	MRL	NC SWSL	Method	Analyzed	By	Notes
Oil & Grease (HEM) [C-007] *	**9.15**		mg/L	1	3.00	5.00		EPA 1664	01/23/08 07:48	MJF	

This report relates only to the sample as received by the laboratory, and may only be reproduced in full.

QUALITY CONTROL

Volatile Organic Compounds by GCMS - Quality Control

Batch 8A16004 - EPA 5030B_MS

Blank (8A16004-BLK1) Prepared: 01/16/2008 08:26 Analyzed: 01/16/2008 12:04

Analyte	Result	Flag	MRL	Units	Spike Level	Source Result	%REC	%REC Limits	RPD	RPD Limit	Notes
Chloromethane	0.18	U	1.0	ug/L							
Vinyl chloride	0.15	U	1.0	ug/L							
Bromomethane	0.21	U	1.0	ug/L							
Chloroethane	0.40	U	1.0	ug/L							
Trichlorofluoromethane	0.16	U	1.0	ug/L							
1,1-Dichloroethene	0.14	U	1.0	ug/L							
Acetone	0.90	U	5.0	ug/L							
Iodomethane	0.23	U	2.0	ug/L							
Carbon disulfide	0.12	U	5.0	ug/L							
Methylene chloride	0.088	U	1.0	ug/L							
Acrylonitrile	2.0	U	5.0	ug/L							
trans-1,2-Dichloroethene	0.10	U	1.0	ug/L							
1,1-Dichloroethane	0.090	U	1.0	ug/L							
Vinyl acetate	0.19	U	2.0	ug/L							
2-Butanone	0.56	U	5.0	ug/L							
cis-1,2-Dichloroethene	0.14	U	1.0	ug/L							
Bromochloromethane	0.19	U	1.0	ug/L							
Chloroform	0.16	U	1.0	ug/L							
1,1,1-Trichloroethane	0.24	U	1.0	ug/L							
Carbon tetrachloride	0.38	U	1.0	ug/L							
1,2-Dichloroethane	0.36	U	1.0	ug/L							
Benzene	0.12	U	1.0	ug/L							
Trichloroethene	0.23	U	1.0	ug/L							
1,2-Dichloropropane	0.18	U	1.0	ug/L							
Dibromomethane	0.14	U	1.0	ug/L							
Bromodichloromethane	0.19	U	0.40	ug/L							
cis-1,3-Dichloropropene	0.16	U	0.20	ug/L							
4-Methyl-2-pentanone	0.36	U	5.0	ug/L							
Toluene	0.15	U	1.0	ug/L							
trans-1,3-Dichloropropene	0.18	U	0.20	ug/L							
1,1,2-Trichloroethane	0.24	U	1.0	ug/L							
Tetrachloroethene	0.25	U	1.0	ug/L							
2-Hexanone	0.24	U	5.0	ug/L							
Dibromochloromethane	0.18	U	1.0	ug/L							
1,2-Dibromoethane	0.19	U	1.0	ug/L							
Chlorobenzene	0.16	U	1.0	ug/L							
1,1,1,2-Tetrachloroethane	0.16	U	1.0	ug/L							
Ethylbenzene	0.17	U	1.0	ug/L							
Styrene	0.12	U	1.0	ug/L							
Bromoform	0.36	U	1.0	ug/L							
1,1,2,2-Tetrachloroethane	0.27	U	1.0	ug/L							
1,2,3-Trichloropropane	0.32	U	1.0	ug/L							
trans-1,4-Dichloro-2-butene	0.60	U	1.0	ug/L							
1,4-Dichlorobenzene	0.15	U	1.0	ug/L							
1,2-Dichlorobenzene	0.17	U	1.0	ug/L							
1,2-Dibromo-3-chloropropane	0.19	U	1.0	ug/L							
Xylenes (Total)	0.21	U	1.0	ug/L							
Surrogate: Dibromofluoromethane	*44*			*ug/L*	*50.0*		*88*	*61-120*			

QUALITY CONTROL

Volatile Organic Compounds by GCMS - Quality Control

Batch 8A16004 - EPA 5030B_MS

Blank (8A16004-BLK1) Continued Prepared: 01/16/2008 08:26 Analyzed: 01/16/2008 12:04

Analyte	Result	Flag	MRL	Units	Spike Level	Source Result	%REC	%REC Limits	RPD	RPD Limit	Notes
Surrogate: Toluene-d8	*41*			*ug/L*	*50.0*		*81*	*75-99*			
Surrogate: 4-Bromofluorobenzene	*45*			*ug/L*	*50.0*		*90*	*69-120*			

LCS (8A16004-BS1) Prepared: 01/16/2008 08:26 Analyzed: 01/16/2008 12:33

Analyte	Result	Flag	MRL	Units	Spike Level	Source Result	%REC	%REC Limits	RPD	RPD Limit	Notes
1,1-Dichloroethene	21		1.0	ug/L	20.0		107	71-121			
Benzene	22		1.0	ug/L	20.0		112	77-128			
Trichloroethene	18		1.0	ug/L	20.0		92	79-120			
Toluene	20		1.0	ug/L	20.0		98	77-120			
Chlorobenzene	19		1.0	ug/L	20.0		93	78-120			

Matrix Spike (8A16004-MS1) Prepared: 01/16/2008 08:26 Analyzed: 01/16/2008 13:03

Source: C717605-02

Analyte	Result	Flag	MRL	Units	Spike Level	Source Result	%REC	%REC Limits	RPD	RPD Limit	Notes
1,1-Dichloroethene	24		1.0	ug/L	20.0	0.14 U	121	71-121			
Benzene	24		1.0	ug/L	20.0	0.12 U	121	77-128			
Trichloroethene	20		1.0	ug/L	20.0	0.23 U	102	79-120			
Toluene	21		1.0	ug/L	20.0	0.15 U	107	77-120			
Chlorobenzene	20		1.0	ug/L	20.0	0.16 U	102	78-120			

Matrix Spike Dup (8A16004-MSD1) Prepared: 01/16/2008 08:26 Analyzed: 01/16/2008 13:32

Source: C717605-02

Analyte	Result	Flag	MRL	Units	Spike Level	Source Result	%REC	%REC Limits	RPD	RPD Limit	Notes
1,1-Dichloroethene	23		1.0	ug/L	20.0	0.14 U	116	71-121	4	27	
Benzene	23		1.0	ug/L	20.0	0.12 U	116	77-128	4	27	
Trichloroethene	20		1.0	ug/L	20.0	0.23 U	102	79-120	0	27	
Toluene	22		1.0	ug/L	20.0	0.15 U	108	77-120	1	23	
Chlorobenzene	20		1.0	ug/L	20.0	0.16 U	101	78-120	1	25	

Metals by EPA 6000/7000 Series Methods - Quality Control

Batch 8A16011 - EPA 3005A

Blank (8A16011-BLK1) Prepared: 01/16/2008 10:17 Analyzed: 01/23/2008 14:33

Analyte	Result	Flag	MRL	Units	Spike Level	Source Result	%REC	%REC Limits	RPD	RPD Limit	Notes
Arsenic	2.0	U	10.0	ug/L							
Barium	0.20	U	10.0	ug/L							
Beryllium	0.70	U	1.00	ug/L							
Cadmium	0.50	U	1.00	ug/L							
Chromium	2.0	U	10.0	ug/L							
Cobalt	2.0	U	10.0	ug/L							
Copper	0.60	U	10.0	ug/L							
Lead	2.0	U	10.0	ug/L							
Nickel	2.0	U	10.0	ug/L							

QUALITY CONTROL

Metals by EPA 6000/7000 Series Methods - Quality Control

Batch 8A16011 - EPA 3005A

Blank (8A16011-BLK1) Continued Prepared: 01/16/2008 10:17 Analyzed: 01/23/2008 14:33

Analyte	Result	Flag	MRL	Units	Spike Level	Source Result	%REC	%REC Limits	RPD	RPD Limit	Notes
Selenium	2.0	U	10.0	ug/L							
Silver	2.0	U	10.0	ug/L							
Vanadium	1.0	U	10.0	ug/L							
Zinc	1.0	U	10.0	ug/L							

LCS (8A16011-BS1) Prepared: 01/16/2008 10:17 Analyzed: 01/23/2008 14:40

Analyte	Result	Flag	MRL	Units	Spike Level	Source Result	%REC	%REC Limits	RPD	RPD Limit	Notes
Arsenic	523		10.0	ug/L	500		105	82-117			
Barium	538		10.0	ug/L	500		108	72-125			
Beryllium	259		1.00	ug/L	250		103	75-121			
Cadmium	264		1.00	ug/L	250		106	72-120			
Chromium	502		10.0	ug/L	500		100	78-119			
Cobalt	497		10.0	ug/L	500		99	76-117			
Copper	262		10.0	ug/L	250		105	80-117			
Lead	502		10.0	ug/L	500		100	72-121			
Nickel	521		10.0	ug/L	500		104	78-116			
Selenium	553		10.0	ug/L	500		111	82-127			
Silver	49.3		10.0	ug/L	50.0		99	80-128			
Vanadium	245		10.0	ug/L	250		98	78-117			
Zinc	499		10.0	ug/L	500		100	80-120			

Matrix Spike (8A16011-MS1) Prepared: 01/16/2008 10:17 Analyzed: 01/23/2008 14:54

Source: C717603-01

Analyte	Result	Flag	MRL	Units	Spike Level	Source Result	%REC	%REC Limits	RPD	RPD Limit	Notes
Arsenic	514		10.0	ug/L	500	2.0 U	103	64-126			
Barium	606		10.0	ug/L	500	81.3	105	74-119			
Beryllium	257		1.00	ug/L	250	0.70 U	103	70-131			
Cadmium	263		1.00	ug/L	250	0.50 U	105	68-121			
Chromium	542		10.0	ug/L	500	2.0 U	108	73-120			
Cobalt	489		10.0	ug/L	500	2.0 U	98	76-120			
Copper	255		10.0	ug/L	250	0.60 U	102	75-123			
Lead	492		10.0	ug/L	500	2.0 U	98	68-126			
Nickel	527		10.0	ug/L	500	2.0 U	105	64-126			
Selenium	542		10.0	ug/L	500	2.0 U	108	65-129			
Silver	49.4		10.0	ug/L	50.0	2.0 U	99	69-121			
Vanadium	247		10.0	ug/L	250	4.1	97	71-130			
Zinc	515		10.0	ug/L	500	8.7	101	63-131			

Matrix Spike Dup (8A16011-MSD1) Prepared: 01/16/2008 10:17 Analyzed: 01/23/2008 15:01

Source: C717603-01

Analyte	Result	Flag	MRL	Units	Spike Level	Source Result	%REC	%REC Limits	RPD	RPD Limit	Notes
Arsenic	520		10.0	ug/L	500	2.0 U	104	64-126	1	12	
Barium	623		10.0	ug/L	500	81.3	108	74-119	3	11	
Beryllium	259		1.00	ug/L	250	0.70 U	103	70-131	0.5	21	

QUALITY CONTROL

Metals by EPA 6000/7000 Series Methods - Quality Control

Batch 8A16011 - EPA 3005A

Matrix Spike Dup (8A16011-MSD1) Continued Prepared: 01/16/2008 10:17 Analyzed: 01/23/2008 15:01

Source: C717603-01

Analyte	Result	Flag	MRL	Units	Spike Level	Source Result	%REC	%REC Limits	RPD	RPD Limit	Notes
Cadmium	264		1.00	ug/L	250	0.50 U	106	68-121	0.3	12	
Chromium	501		10.0	ug/L	500	2.0 U	100	73-120	8	10	
Cobalt	494		10.0	ug/L	500	2.0 U	99	76-120	0.9	17	
Copper	261		10.0	ug/L	250	0.60 U	105	75-123	2	16	
Lead	498		10.0	ug/L	500	2.0 U	100	68-126	1	19	
Nickel	522		10.0	ug/L	500	2.0 U	104	64-126	1	12	
Selenium	551		10.0	ug/L	500	2.0 U	110	65-129	2	10	
Silver	48.7		10.0	ug/L	50.0	2.0 U	97	69-121	1	12	
Vanadium	250		10.0	ug/L	250	4.1	98	71-130	1	16	
Zinc	507		10.0	ug/L	500	8.7	100	63-131	2	24	

Batch 8A16012 - EPA 3005A

Blank (8A16012-BLK1) Prepared: 01/16/2008 10:23 Analyzed: 01/17/2008 11:02

Analyte	Result	Flag	MRL	Units	Spike Level	Source Result	%REC	%REC Limits	RPD	RPD Limit	Notes
Antimony	0.68	U	2.00	ug/L							
Thallium	0.036	U	1.00	ug/L							

LCS (8A16012-BS1) Prepared: 01/16/2008 10:23 Analyzed: 01/17/2008 11:04

Analyte	Result	Flag	MRL	Units	Spike Level	Source Result	%REC	%REC Limits	RPD	RPD Limit	Notes
Antimony	24.4		2.00	ug/L	25.0		97	85-115			
Thallium	24.8		1.00	ug/L	25.0		99	85-115			

Matrix Spike (8A16012-MS1) Prepared: 01/16/2008 10:23 Analyzed: 01/17/2008 11:10

Source: C717603-02

Analyte	Result	Flag	MRL	Units	Spike Level	Source Result	%REC	%REC Limits	RPD	RPD Limit	Notes
Antimony	24.7		2.00	ug/L	25.0	0.68 U	99	85-115			
Thallium	24.9		1.00	ug/L	25.0	0.056	99	85-115			

Matrix Spike Dup (8A16012-MSD1) Prepared: 01/16/2008 10:23 Analyzed: 01/17/2008 11:13

Source: C717603-02

Analyte	Result	Flag	MRL	Units	Spike Level	Source Result	%REC	%REC Limits	RPD	RPD Limit	Notes
Antimony	24.8		2.00	ug/L	25.0	0.68 U	99	85-115	0.5	20	
Thallium	25.1		1.00	ug/L	25.0	0.056	100	85-115	0.8	20	

Batch 8A24008 - EPA 7470A

Blank (8A24008-BLK1) Prepared: 01/24/2008 09:13 Analyzed: 01/25/2008 11:15

Analyte	Result	Flag	MRL	Units	Spike Level	Source Result	%REC	%REC Limits	RPD	RPD Limit	Notes
Mercury	0.11	U	0.20	ug/L							

QUALITY CONTROL

Metals by EPA 6000/7000 Series Methods - Quality Control

Batch 8A24008 - EPA 7470A

LCS (8A24008-BS1) Prepared: 01/24/2008 09:13 Analyzed: 01/25/2008 11:19

Analyte	Result	Flag	MRL	Units	Spike Level	Source Result	%REC	%REC Limits	RPD	RPD Limit	Notes
Mercury	4.96		0.20	ug/L	5.00		99	87-123			

Matrix Spike (8A24008-MS1) Prepared: 01/24/2008 09:13 Analyzed: 01/25/2008 11:25

Source: C717761-07

Analyte	Result	Flag	MRL	Units	Spike Level	Source Result	%REC	%REC Limits	RPD	RPD Limit	Notes
Mercury	4.98		0.20	ug/L	5.00	0.11 U	100	63-132			

Matrix Spike Dup (8A24008-MSD1) Prepared: 01/24/2008 09:13 Analyzed: 01/25/2008 11:34

Source: C717761-07

Analyte	Result	Flag	MRL	Units	Spike Level	Source Result	%REC	%REC Limits	RPD	RPD Limit	Notes
Mercury	4.87		0.20	ug/L	5.00	0.11 U	97	63-132	2	10	

Post Spike (8A24008-PS1) Prepared: 01/24/2008 09:13 Analyzed: 01/25/2008 11:37

Source: C717761-07

Analyte	Result	Flag	MRL	Units	Spike Level	Source Result	%REC	%REC Limits	RPD	RPD Limit	Notes
Mercury	4.67		0.20	ug/L	5.00	0.02	93	0-200			

Classical Chemistry Parameters - Quality Control

Batch 8A16009 - NO PREP

Blank (8A16009-BLK1) Prepared: 01/16/2008 10:30 Analyzed: 01/18/2008 09:36

Analyte	Result	Flag	MRL	Units	Spike Level	Source Result	%REC	%REC Limits	RPD	RPD Limit	Notes
Total Suspended Solids	1.0	U	1.0	mg/L							

LCS (8A16009-BS1) Prepared: 01/16/2008 10:30 Analyzed: 01/18/2008 09:36

Analyte	Result	Flag	MRL	Units	Spike Level	Source Result	%REC	%REC Limits	RPD	RPD Limit	Notes
Total Suspended Solids	85		1.0	mg/L	80.0		106	82-119			

Duplicate (8A16009-DUP1) Prepared: 01/16/2008 10:30 Analyzed: 01/18/2008 09:36

Source: C800530-01

Analyte	Result	Flag	MRL	Units	Spike Level	Source Result	%REC	%REC Limits	RPD	RPD Limit	Notes
Total Suspended Solids	12		1.0	mg/L		10			18	10	QR-04

Batch 8A16024 - NO PREP

Blank (8A16024-BLK1) Prepared: 01/17/2008 10:20 Analyzed: 01/17/2008 10:40

Analyte	Result	Flag	MRL	Units	Spike Level	Source Result	%REC	%REC Limits	RPD	RPD Limit	Notes
Nitrite as N	**0.014**	**J**	0.10	mg/L							

QUALITY CONTROL

Classical Chemistry Parameters - Quality Control

Batch 8A16024 - NO PREP

LCS (8A16024-BS1) Prepared: 01/17/2008 10:20 Analyzed: 01/17/2008 10:41

Analyte	Result	Flag	MRL	Units	Spike Level	Source Result	%REC	%REC Limits	RPD	RPD Limit	Notes
Nitrite as N	0.99	B	0.10	mg/L	1.00		99	80-120			

Matrix Spike (8A16024-MS1) Prepared: 01/17/2008 10:20 Analyzed: 01/17/2008 10:56

Source: C717604-01

Analyte	Result	Flag	MRL	Units	Spike Level	Source Result	%REC	%REC Limits	RPD	RPD Limit	Notes
Nitrite as N	1.0	B	0.10	mg/L	1.00	0.019	99	80-120			

Matrix Spike Dup (8A16024-MSD1) Prepared: 01/17/2008 10:20 Analyzed: 01/17/2008 10:57

Source: C717604-01

Analyte	Result	Flag	MRL	Units	Spike Level	Source Result	%REC	%REC Limits	RPD	RPD Limit	Notes
Nitrite as N	1.0	B	0.10	mg/L	1.00	0.019	100	80-120	1	25	

Batch 8A16026 - NO PREP

Blank (8A16026-BLK1) Prepared: 01/16/2008 18:33 Analyzed: 01/21/2008 14:13

Analyte	Result	Flag	MRL	Units	Spike Level	Source Result	%REC	%REC Limits	RPD	RPD Limit	Notes
Biochemical Oxygen Demand	2.0	U	2.0	mg/L							

LCS (8A16026-BS1) Prepared: 01/16/2008 18:33 Analyzed: 01/21/2008 14:13

Analyte	Result	Flag	MRL	Units	Spike Level	Source Result	%REC	%REC Limits	RPD	RPD Limit	Notes
Biochemical Oxygen Demand	210		2.0	mg/L	198		104	82-118			

Duplicate (8A16026-DUP1) Prepared: 01/16/2008 18:33 Analyzed: 01/21/2008 14:13

Source: C800333-02

Analyte	Result	Flag	MRL	Units	Spike Level	Source Result	%REC	%REC Limits	RPD	RPD Limit	Notes
Biochemical Oxygen Demand	2.0	U	2.0	mg/L		2.0 U				25	

Batch 8A18003 - NO PREP

Blank (8A18003-BLK1) Prepared: 01/18/2008 10:33 Analyzed: 01/21/2008 10:44

Analyte	Result	Flag	MRL	Units	Spike Level	Source Result	%REC	%REC Limits	RPD	RPD Limit	Notes
Cyanide (total)	0.0040	U	0.0050	mg/L							

Blank (8A18003-BLK2) Prepared: 01/18/2008 14:22 Analyzed: 01/21/2008 11:07

Analyte	Result	Flag	MRL	Units	Spike Level	Source Result	%REC	%REC Limits	RPD	RPD Limit	Notes
Cyanide (total)	0.0040	U	0.0050	mg/L							

LCS (8A18003-BS1) Prepared: 01/18/2008 10:33 Analyzed: 01/21/2008 10:49

QUALITY CONTROL

Classical Chemistry Parameters - Quality Control

Batch 8A18003 - NO PREP

LCS (8A18003-BS1) Continued Prepared: 01/18/2008 10:33 Analyzed: 01/21/2008 10:49

Analyte	Result	Flag	MRL	Units	Spike Level	Source Result	%REC	%REC Limits	RPD	RPD Limit	Notes
Cyanide (total)	0.16		0.0050	mg/L	0.150		105	85-115			

Matrix Spike (8A18003-MS1) Prepared: 01/18/2008 14:22 Analyzed: 01/21/2008 11:11

Source: C717761-07

Analyte	Result	Flag	MRL	Units	Spike Level	Source Result	%REC	%REC Limits	RPD	RPD Limit	Notes
Cyanide (total)	0.16		0.0050	mg/L	0.150	0.0040 U	108	85-115			

Matrix Spike Dup (8A18003-MSD1) Prepared: 01/18/2008 14:22 Analyzed: 01/21/2008 11:13

Source: C717761-07

Analyte	Result	Flag	MRL	Units	Spike Level	Source Result	%REC	%REC Limits	RPD	RPD Limit	Notes
Cyanide (total)	0.16		0.0050	mg/L	0.150	0.0040 U	110	85-115	2	20	

Batch 8A20004 - NO PREP

Blank (8A20004-BLK1) Prepared: 01/20/2008 10:02 Analyzed: 01/20/2008 18:27

Analyte	Result	Flag	MRL	Units	Spike Level	Source Result	%REC	%REC Limits	RPD	RPD Limit	Notes
Nitrate/Nitrite as N	0.022	U	0.10	mg/L							

LCS (8A20004-BS1) Prepared: 01/20/2008 10:02 Analyzed: 01/20/2008 17:16

Analyte	Result	Flag	MRL	Units	Spike Level	Source Result	%REC	%REC Limits	RPD	RPD Limit	Notes
Nitrate/Nitrite as N	1.1		0.10	mg/L	1.25		87	80-120			

Matrix Spike (8A20004-MS1) Prepared: 01/20/2008 10:02 Analyzed: 01/20/2008 17:21

Source: C717604-01

Analyte	Result	Flag	MRL	Units	Spike Level	Source Result	%REC	%REC Limits	RPD	RPD Limit	Notes
Nitrate/Nitrite as N	1.1		0.10	mg/L	1.25	0.044	88	80-120			

Matrix Spike Dup (8A20004-MSD1) Prepared: 01/20/2008 10:02 Analyzed: 01/20/2008 17:23

Source: C717604-01

Analyte	Result	Flag	MRL	Units	Spike Level	Source Result	%REC	%REC Limits	RPD	RPD Limit	Notes
Nitrate/Nitrite as N	1.2		0.10	mg/L	1.25	0.044	92	80-120	4	25	

Batch 8A24011 - NO PREP

Blank (8A24011-BLK1) Prepared: 01/24/2008 11:40 Analyzed: 01/24/2008 16:40

Analyte	Result	Flag	MRL	Units	Spike Level	Source Result	%REC	%REC Limits	RPD	RPD Limit	Notes
Chemical Oxygen Demand	10	U	10	mg/L							

LCS (8A24011-BS1) Prepared: 01/24/2008 11:40 Analyzed: 01/24/2008 16:40

QUALITY CONTROL

Classical Chemistry Parameters - Quality Control

Batch 8A24011 - NO PREP

LCS (8A24011-BS1) Continued Prepared: 01/24/2008 11:40 Analyzed: 01/24/2008 16:40

Analyte	Result	Flag	MRL	Units	Spike Level	Source Result	%REC	%REC Limits	RPD	RPD Limit	Notes
Chemical Oxygen Demand	480		10	mg/L	500		96	90-110			

Matrix Spike (8A24011-MS1) Prepared: 01/24/2008 11:40 Analyzed: 01/24/2008 16:40

Source: C717630-01

Analyte	Result	Flag	MRL	Units	Spike Level	Source Result	%REC	%REC Limits	RPD	RPD Limit	Notes
Chemical Oxygen Demand	1400		10	mg/L	500	960	80	90-110			QM-16

Matrix Spike Dup (8A24011-MSD1) Prepared: 01/24/2008 11:40 Analyzed: 01/24/2008 16:40

Source: C717630-01

Analyte	Result	Flag	MRL	Units	Spike Level	Source Result	%REC	%REC Limits	RPD	RPD Limit	Notes
Chemical Oxygen Demand	1400		10	mg/L	500	960	81	90-110	0.2	15	QM-16

QUALITY CONTROL

Classical Chemistry Parameters - Quality Control

Batch 8A22001 - EPA 1664A

Blank (8A22001-BLK1) Prepared: 01/22/2008 07:27 Analyzed: 01/23/2008 07:48

Analyte	Result	Flag	MRL	Units	Spike Level	Source Result	%REC	%REC Limits	RPD	RPD Limit	Notes
Oil & Grease (HEM)	3.00	U	5.00	mg/L							

LCS (8A22001-BS1) Prepared: 01/22/2008 07:27 Analyzed: 01/23/2008 07:48

Analyte	Result	Flag	MRL	Units	Spike Level	Source Result	%REC	%REC Limits	RPD	RPD Limit	Notes
Oil & Grease (HEM)	31.0		5.00	mg/L	40.0		78	78-114			

Matrix Spike (8A22001-MS1) Prepared: 01/22/2008 07:27 Analyzed: 01/23/2008 07:48

Source: B800584-01

Analyte	Result	Flag	MRL	Units	Spike Level	Source Result	%REC	%REC Limits	RPD	RPD Limit	Notes
Oil & Grease (HEM)	30.7		5.00	mg/L	40.0	3.00 U	77	50-150			

Matrix Spike Dup (8A22001-MSD1) Prepared: 01/22/2008 07:27 Analyzed: 01/23/2008 07:48

Source: B800584-01

Analyte	Result	Flag	MRL	Units	Spike Level	Source Result	%REC	%REC Limits	RPD	RPD Limit	Notes
Oil & Grease (HEM)	31.4		5.00	mg/L	40.0	3.00 U	78	50-150	2	18	

QUALITY CONTROL

Classical Chemistry Parameters - Quality Control

Batch 8A21014 - NO PREP

Blank (8A21014-BLK1) Prepared: 01/21/2008 10:45 Analyzed: 01/21/2008 11:25

QUALITY CONTROL

Classical Chemistry Parameters - Quality Control

Batch 8A21014 - NO PREP

Blank (8A21014-BLK1) Continued Prepared: 01/21/2008 10:45 Analyzed: 01/21/2008 11:25

Analyte	Result	Flag	MRL	Units	Spike Level	Source Result	%REC	%REC Limits	RPD	RPD Limit	Notes
Sulfate	0.03	U	2.0	mg/L							

LCS (8A21014-BS1) Prepared: 01/21/2008 10:45 Analyzed: 01/21/2008 11:45

Analyte	Result	Flag	MRL	Units	Spike Level	Source Result	%REC	%REC Limits	RPD	RPD Limit	Notes
Sulfate	240		2.0	mg/L	250		96	90-115			

Matrix Spike (8A21014-MS1) Prepared: 01/21/2008 10:45 Analyzed: 01/21/2008 12:04

Source: A800006-03

Analyte	Result	Flag	MRL	Units	Spike Level	Source Result	%REC	%REC Limits	RPD	RPD Limit	Notes
Sulfate	300		2.0	mg/L	255	32	104	90-115			

Matrix Spike Dup (8A21014-MSD1) Prepared: 01/21/2008 10:45 Analyzed: 01/21/2008 12:24

Source: A800006-03

Analyte	Result	Flag	MRL	Units	Spike Level	Source Result	%REC	%REC Limits	RPD	RPD Limit	Notes
Sulfate	290		2.0	mg/L	255	32	103	90-115	0.7	10	

Batch 8A23008 - NO PREP

Blank (8A23008-BLK1) Prepared: 01/23/2008 10:12 Analyzed: 01/24/2008 14:41

Analyte	Result	Flag	MRL	Units	Spike Level	Source Result	%REC	%REC Limits	RPD	RPD Limit	Notes
Total Kjeldahl Nitrogen	0.043	U	0.050	mg/L							

Blank (8A23008-BLK2) Prepared: 01/23/2008 10:12 Analyzed: 01/24/2008 15:10

Analyte	Result	Flag	MRL	Units	Spike Level	Source Result	%REC	%REC Limits	RPD	RPD Limit	Notes
Total Kjeldahl Nitrogen	**0.088**		0.050	mg/L							

LCS (8A23008-BS1) Prepared: 01/23/2008 10:12 Analyzed: 01/24/2008 14:42

Analyte	Result	Flag	MRL	Units	Spike Level	Source Result	%REC	%REC Limits	RPD	RPD Limit	Notes
Total Kjeldahl Nitrogen	2.6	B	0.050	mg/L	2.50		104	86-108			

Matrix Spike (8A23008-MS1) Prepared: 01/23/2008 10:12 Analyzed: 01/24/2008 14:45

Source: A707270-01

Analyte	Result	Flag	MRL	Units	Spike Level	Source Result	%REC	%REC Limits	RPD	RPD Limit	Notes
Total Kjeldahl Nitrogen	3.1	B	0.050	mg/L	2.50	0.50	106	86-108			

Matrix Spike Dup (8A23008-MSD1) Prepared: 01/23/2008 10:12 Analyzed: 01/24/2008 14:46

Source: A707270-01

Analyte	Result	Flag	MRL	Units	Spike Level	Source Result	%REC	%REC Limits	RPD	RPD Limit	Notes

QUALITY CONTROL

Classical Chemistry Parameters - Quality Control

Batch 8A23008 - NO PREP

Matrix Spike Dup (8A23008-MSD1) Continued Prepared: 01/23/2008 10:12 Analyzed: 01/24/2008 14:46

Source: A707270-01

Analyte	Result	Flag	MRL	Units	Spike Level	Source Result	%REC	%REC Limits	RPD	RPD Limit	Notes
Total Kjeldahl Nitrogen	3.2	B	0.050	mg/L	2.50	0.50	107	86-108	0.9	14	

Batch 8A23009 - NO PREP

Blank (8A23009-BLK1) Prepared: 01/23/2008 10:14 Analyzed: 01/25/2008 09:51

Analyte	Result	Flag	MRL	Units	Spike Level	Source Result	%REC	%REC Limits	RPD	RPD Limit	Notes
Phosphorus	0.020	U	0.030	mg/L							

LCS (8A23009-BS1) Prepared: 01/23/2008 10:14 Analyzed: 01/25/2008 09:52

Analyte	Result	Flag	MRL	Units	Spike Level	Source Result	%REC	%REC Limits	RPD	RPD Limit	Notes
Phosphorus	2.4		0.030	mg/L	2.50		97	89-107			

Matrix Spike (8A23009-MS1) Prepared: 01/23/2008 10:14 Analyzed: 01/25/2008 09:55

Source: A707270-01

Analyte	Result	Flag	MRL	Units	Spike Level	Source Result	%REC	%REC Limits	RPD	RPD Limit	Notes
Phosphorus	4.5		0.030	mg/L	2.50	2.2	93	89-107			

Matrix Spike Dup (8A23009-MSD1) Prepared: 01/23/2008 10:14 Analyzed: 01/25/2008 09:56

Source: A707270-01

Analyte	Result	Flag	MRL	Units	Spike Level	Source Result	%REC	%REC Limits	RPD	RPD Limit	Notes
Phosphorus	4.5		0.030	mg/L	2.50	2.2	93	89-107	0.02	10	

Batch 8A28007 - NO PREP

Blank (8A28007-BLK1) Prepared: 01/28/2008 10:12 Analyzed: 01/29/2008 15:15

Analyte	Result	Flag	MRL	Units	Spike Level	Source Result	%REC	%REC Limits	RPD	RPD Limit	Notes
Phenolics	0.02	U	0.05	mg/L							

LCS (8A28007-BS1) Prepared: 01/28/2008 10:12 Analyzed: 01/29/2008 15:15

Analyte	Result	Flag	MRL	Units	Spike Level	Source Result	%REC	%REC Limits	RPD	RPD Limit	Notes
Phenolics	0.51		0.05	mg/L	0.500		102	79-104			

Matrix Spike (8A28007-MS1) Prepared: 01/28/2008 10:12 Analyzed: 01/29/2008 15:15

Source: A800542-01

Analyte	Result	Flag	MRL	Units	Spike Level	Source Result	%REC	%REC Limits	RPD	RPD Limit	Notes
Phenolics	0.50		0.05	mg/L	0.500	0.02 U	100	79-104			

Matrix Spike Dup (8A28007-MSD1) Prepared: 01/28/2008 10:12 Analyzed: 01/29/2008 15:15

QUALITY CONTROL

Classical Chemistry Parameters - Quality Control

Batch 8A28007 - NO PREP

Matrix Spike Dup (8A28007-MSD1) Continued Prepared: 01/28/2008 10:12 Analyzed: 01/29/2008 15:15

Source: A800542-01

Analyte	Result	Flag	MRL	Units	Spike Level	Source Result	%REC	%REC Limits	RPD	RPD Limit	Notes
Phenolics	0.51		0.05	mg/L	0.500	0.02 U	101	79-104	0.7	10	

FLAGS/NOTES AND DEFINITIONS

B	The analyte was detected in the associated method blank.
D	The sample was analyzed at dilution.
J	The reported value is between the laboratory method detection limit (MDL) and the laboratory method reporting limit (MRL), adjusted for actual sample preparation data and moisture content, where applicable.
U	The analyte was analyzed for but not detected to the level shown, adjusted for actual sample preparation data and moisture content, where applicable.
MRL	Method Reporting Limit. The MRL is roughly equivalent to the practical quantitation limit (PQL) and is based on the low point of the calibration curve, when applicable, sample preparation factor, dilution factor, and, in the case of soil samples, moisture content.
QM-16	Matrix spike recovery could not be calculated due to high concentrations of analyte in source sample.
QR-04	Duplicate precision outside acceptance limits due to low analyte concentration.

ENVIRONMENTAL CONSERVATION LABORATORIES CHAIN-OF-CUSTODY RECORD

10775 Central Port Dr.
Orlando, FL 32824
(407) 826-5314 Fax (407) 850-6945

4810 Executive Park Court, Suite 211
Jacksonville, FL 32216-6069
(904) 296-3007 Fax (904) 296-6210

1015 Passport Way
Cary, NC 27513
(919) 677-1669 Fax (919) 677-9846

Page 1 of 2

Client Name	Golder Associates, Inc. (GO007)
Project Number	053-6620008.100
Address	The Wingate Building 4900 Koger Blvd., Suite 149
Project Name/Desc	Republic-East Carolina Landfill leachate
City/ST/Zip	Greensboro, NC 27407
PO # / Billing Info	
Tel	(336) 852-4903
Fax	(336) 852-4904
Reporting Contact	Dusty Reedy
Sampler(s) Name, Affiliation (Print)	K. Higgs / R. Stringfellow
Billing Contact	Accounts Payable
Sampler(s) Signature	Ryan Stringfellow
Facility # (if required)	

Requested Turnaround Times

Note : Rush requests subject to acceptance by the facility

✓ Standard

___ Expedited

Due ___/___/___

Lab Workorder C717604

Requested Analyses — Preservation (See Codes) (Combine as necessary)

Item #	Sample ID (Field Identification)	Collection Date	Collection Time	Comp / Grab	Matrix (see codes)	Total # of Containers	8260B Appendix 1	Ag,As,Ba,Be,Cd,Co,Cr,Cu,Hg,Ni,Pb,Sb,Se,Tl,V,Zn	BOD 405.1	COD 410.4	Cyanide Total 9014	Nitrate Calc 353.2	Nitrite as N 353.2	NOX 353.2,P,TKN 351.2	O&G 1664A	Phenols 420.1	Sample Comments
	0803-Leachate	01/15/08	13:20	G	Water	14	X	X	X	X	X	X	X	X	X	X	NC Leachate list includes App I (metals & ions), BOD, Nitrate, Sulfate, COD, Phosphorus, O&G, Total phenols, cyanide, TSS, TKN, & mercury

<-- Total # of Containers

Sample Kit Prepared By: DSW BSG	Date/Time: 12/19/07	Relinquished By: Ryan Stringfellow	Date/Time: 01/15/08 16:45	Received By:	Date/Time:
Comments: 1. Please provide a "Level "2" data report. 2. unit rates per "Basic Ordering Agreement for laboratory services" dated April 9, 2004 & 2006 Eplus MSA Price list. 3. Estimated Fee = $ 956.00 (Sun/Sun rates)		Relinquished By: Ryan Stringfellow	Date/Time:	Received By:	Date/Time:
		Relinquished By:	Date/Time:	Received By: Robert B.	Date/Time: 1/15/08 17:20
		Cooler #'s & Temps on Receipt: C-264	2.0°C	Condition Upon Receipt: ___ Acceptable ___ Unacceptable	

Matrix : GW-Groundwater SO-Soil SE-Sediment SW-Surface Water WW-Wastewater A-Air O-Other (detail in comments)

Preservation: I-Ice H-HCl N-HNO3 S-H2SO4 NO-NaOH O-Other (detail in comments)

Note : All samples submitted to ENCO Labs are in accordance with the terms and conditions listed on the reverse of this form, unless prior written agreements exist

LOA per Ryan Stringfellow : Ryan Stringfellow Approved By: [illegible]

ENVIRONMENTAL CONSERVATION LABORATORIES CHAIN-OF-CUSTODY RECORD

10775 Central Port Dr.
Orlando, FL 32824
(407) 826-5314 Fax (407) 850-6945

4810 Executive Park Court, Suite 211
Jacksonville, FL 32216-6069
(904) 296-3007 Fax (904) 296-6210

1015 Passport Way
Cary, NC 27513
(919) 677-1669 Fax (919) 677-9846

Client Name: Golder Associates, Inc. (GO007)	Project Number: 053-6620008.100
Address: The Wingate Building 4900 Koger Blvd., Suite 140	Project Name/Desc: Republic-East Carolina Landfill leachate
City/ST/Zip: Greensboro, NC 27407	PO # / Billing Info:
Tel: (336) 852-4903 / Fax: (336) 852-4904	Reporting Contact: Dusty Reedy
Sampler(s) Name, Affiliation (Print): K. Higgs / R. Stringfellow	Billing Contact: Accounts Payable
Sampler(s) Signature: Ryan Stringfellow	Facility # (if required):

Requested Analyses: Sulfate 300, TSS 160.2

Requested Turnaround Times

Note : Rush requests subject to acceptance by the facility

✓ Standard

___ Expedited

Due ___/___/___

Lab Workorder: C717604

Preservation (See Codes) (Combine as necessary)

Item #	Sample ID (Field Identification)	Collection Date	Collection Time	Comp / Grab	Matrix (see codes)	Total # of Containers	Sulfate 300	TSS 160.2	Sample Comments
	0803-Leachate	01-15-08	13:20	G	Water	14	X	X	NC Leachate List includes App I (metals & NO_3), BOD, Nitrate, sulfate, COD, Phosphorus, O&G, Total phenols, cyanide, TSS, TKN, & mercury

<-- Total # of Containers

Sample Kit Prepared By: DSW BSG 12/19/07	Relinquished By: Ryan Stringfellow	Date/Time: 01/15/08 16:45	Received By: / Date/Time:
Comments: 1. Please provide a "Level 2" data report. 2. Unit rates per Basic ordering Agreement for laboratory services" dated April 9, 2004 & 2004 ENCO MSA Price List.	Relinquished By: / Date/Time:		Received By: / Date/Time:
	Relinquished By: / Date/Time:		Received By: Robert B. / Date/Time: 1/15/08 1720
	Cooler #'s & Temps on Receipt: C-264 2.0°C		Condition Upon Receipt: ___ Acceptable ___ Unacceptable

Matrix : GW-Groundwater SO-Soil SE-Sediment SW-Surface Water WW-Wastewater A-Air O-Other (detail in comments)

Preservation: I-Ice N-HCl N-HNO3 S-H2SO4 NO-NaOH O-Other (detail in comments)

Note : All samples submitted to ENCO Labs are in accordance with the terms and conditions listed on the reverse of this form, unless prior written agreements exist.

LOA per Ryan Stringfellow: Ryan Stringfellow Approved By: [signature]

GOLDER ASSOCIATES NC, INC.
QUALITY ASSURANCE & QUALITY CONTROL
LABORATORY DATA REVIEW

Project Name: East Carolina Landfill Leachate

Project Reference Number: 053-6620008.100

Sampling Event Date: January 15, 2008

Review Date: January 31, 2008 *Initials:* RS

Review Date: February 1, 2008 *Initials:* JD

Report #: C717604

Person(s) performing the review are to initial each item on this form as acknowledgement of data acceptance, or as acknowledgement of a review issue. In the case of the latter, a brief explanation should follow the applicable item.

Golder Associates Inc. has reviewed the laboratory certificates of analysis, chain-of-custody form, and laboratory provided sample group quality assurance and quality control data for the above referenced sample group to identify potential bias or inaccuracy, in general accordance with the following United States Environmental Protection Agency documents:

- Region III Modifications to Functional Guidelines for Organic Data Review Multi-Media, Multi-Concentration, September 1994;
- Region III Modifications to the Laboratory Data Validation Functional Guidelines for Evaluating Inorganic Analyses, April 1993; and
- Laboratory Data Validation Functional Guidelines for Evaluating Inorganic Analyses, July 1998.

COMPLIANCE ANALYTE LIST(S) (check all that apply)

___ NC Closed Facility/C & D List

___ NC Appendix I

___ NC Appendix I + Detects

___ NC Appendix II

X NC Subtitle D Leachate List

Other: O&G, phenols, cyanide, TKN, BOD, COD, nitrate, sulfate, TSS, mercury, phosphorus

1.0 CHAIN OF CUSTODY (COC) REVIEW

RS JD COC was properly signed by all parties.

RS JD Correct project name and number are on the form.

RS JD Sample receipt condition at laboratory was acceptable.

RS JD Each sample and blank submitted for analysis appears in the report.

Notes: _____

2.0 SAMPLE HOLDING TIMES

RS JD Holding times for extraction and/or analysis were met for each analytical Method (see below for reference).

Notes: _____

Review Criteria		
Method	**Analytes**	**Holding Time**
SW-846 Method 8260 and 8011	VOCs	14 days
SW-846 Methods 8270, 8080, 8081, 8082, and 8151	SVOCs, PCBs, pesticides and herbicides	7 days for extraction, 40 days from extraction for analysis
SW-846 Methods 6000 and 7000 Series	Metals except mercury	6 months (no temperature requirements)
SW-846 Method 7470	Mercury	28 days
SW-846 Method 376.1	Sulfide	7 days
SW-846 Method 9010	Cyanide	14 days
EPA Method 300	Nitrate/Sulfate	48 hours/28 days
EPA Method 405.1	BOD	48 hours
EPA Method 410.4	COD	28 days
EPA Method 365.4	Phosphorous	28 days

3.0 LABORATORY QUALITY CONTROL REVIEW

RS JD Laboratory analyzed at least one internal blank for each method, where applicable.

RS JD Laboratory blank is interference-free.

- ***Nitrate as N was detected in a method blank (8A16024-BLK1) at a concentration of 0.014 µg/L (J). The associated sample should be considered to have a possible high bias. However, the concentration in the associated sample is less than the MRL.***
- ***Total Kjeldahl Nitrogen was detected in a method blank (8A23008-BLK2) at a concentration of 0.088 µg/L.***

RS JD Surrogate recoveries are provided for each analytical method, where applicable.

RS JD Surrogate recoveries for each method are within the acceptable limits (i.e., at least 50% of the surrogates were within range).

RS JD MS/MSD/LCS data results are provided for each analytical method.

RS JD MS/MSD/LCS recoveries for each method are within the acceptable limits (i.e., at least 1 of the 3 were within range).

- ***The spike recovery of the MS and MSD (8A24011-MS1 and 8A24011-MSD1) for the COD analysis could not be accurately calculated due to the high concentration of analyte in the source sample and is flagged with a "QM-16." The QC batch was***

approved based on acceptable LCS recoveries.

Notes: ***The precision (%RPD) for the Duplicate TSS analysis (8A16009-DUP1) was outside of control limits due to low analyte concentration found in the sample and was is flagged with a "QR-04."***

4.0 ANALYTE LISTS/METHODS

RS JD The proper number of constituents are present for each analyte list as identified above (including detects where applicable).

RS JD Proper EPA SW-846 analytical methods were used for analysis.

Notes: _____

5.0 DATA REPORTING

RS JD All analytical reporting associated with the event was performed by the contracted lab.

RS JD Trip, field and/or equipment, and laboratory blank results have all been reported. All detects for blanks are listed below by constituent. All laboratory method blanks, if any, have been 'flagged' with a 'B' where detected in other samples as appropriate and a laboratory narrative was provided. If the sample was flagged by the laboratory and is not within 5X of the concentration in the blank (or 10X for commonly detected laboratory contaminants-acetone, methylene chloride and phthalates), list below with explanation if flags should be removed. If flags need to be added for samples, also list below.

- ***Nitrate as N was detected in a method blank (8A16024-BLK1) at a concentration of 0.014 µg/L (J). The associated sample should be considered to have a possible high bias. However, the concentration in the associated sample is less than the MRL. The concentration of Nitrate as N should be "B" flagged for the leachate sample.***
- ***Total Kjeldahl Nitrogen was detected in a method blank (8A23008-BLK2) at a concentration of 0.088 µg/L.***

RS JD It is clear from the laboratory report that samples have or have not been diluted during analysis, and if the samples have been diluted, the result is reported as a multiple of the dilution (e.g., a sample diluted 10x resulting in an analytical detection of 1.0 should be reported as 10). Those that have been diluted are listed below with the dilution factor.

- ***VOCs diluted 50x***
- ***Phenolics diluted 2x***
- ***Sulfate diluted 2x***
- ***Total Kjeldahl Nitrogen diluted 500x***

RS JD The report provides the reporting limit for each constituent.

RS JD The results were reported at or below their proper reporting limits (e.g., MDLs with SWSLs reported). Those that are not reported correctly are listed below (by constituent) with the proper reporting limit listed beside them. State if the reporting limit error is due to dilutions.

NA NA No organic or inorganic constituents were reported above their respective North Carolina Groundwater Quality (2L) Standards or above their respective Groundwater Protection Standards in wells, or field/equipment/trip blanks, or above applicable surface water standards in surface water points.

- ***Not applicable for leachate***

RS JD No inorganic and organic constituents were detected in a well or surface water point at concentrations outside of their historical range (more than 5X previous concentrations or first-time detections).

- ***Analytes detected at their highest historical concentrations were: Antimony, Nickel, Vanadium, Phenols, Nitrate, and Nitrite as N.***
- ***Selenium was detected for the first time.***

RS JD Other report issues/Communications with laboratory/etc.:

Notes:

- ***Lab Report C717604 is a revised copy of the data regarding test samples from January 15, 2008. It arrived on January 31, 2008.***

WORK ORDER

Printed: 1/30/2008 9:50:50AM

C717604

ENCO Cary

Sample Receipt Conditions

Client:	**Golder Associates, Inc. (GO007)**	**Lab Project Mgr:**	**Stephanie Franz**
Project:	**Republic-East Carolina Landfill leachate**	**Project Number:**	**053-6620008.100**
PO #:			

Report To:

Golder Associates, Inc. (GO007)
Dusty Reedy
The Wingate Building 4900 Koger Blvd., Suite 140
Greensboro, NC 27407
Phone: (336) 852-4903
Fax: (336) 852-4904

Invoice To:

Golder Associates, Inc. (GO007)
Accounts Payable
The Wingate Building 4900 Koger Blvd., Suite 140
Greensboro, NC 27407
Phone :(804) 358-7900
Fax: 804-358-2900

Received By:	Robin C Bridges	Date Received:	15-Jan-08 17:20
Logged In By:	Robin C Bridges	Date Logged In:	15-Jan-08 19:21

Work Order Comments:

C-264 received at 2.0°C

Containers Intact	Y	Containers Properly Preserved	Y	Proper Containers Received	Y	All Samples in PreLog Received	Y	COC/Labels Agree	Y
Custody Seals Intact	Y	Volatile Containers Preserved	Y	Volatile Containers Headspace Free	Y	Aqueous Samples Checked for Residual Cl	N	Received On Ice	Y

Reviewed By

Date

Environmental Conservation Laboratories, Inc.
102-A Woodwinds Industrial Court
Cary NC, 27511
Phone: 919.467.3090 FAX: 919.467.3515
www.encolabs.com

Thursday, January 24, 2008

Golder Associates, Inc. (GO007)

Attn: Dusty Reedy

The Wingate Building 4900 Koger Blvd., Suite 140

Greensboro, NC 27407

RE: Laboratory Results for
Project Number: 053-6620008.100, Project Name/Desc: Republic-East Carolina Landfill-SWs
ENCO Workorder: C717603

Dear Dusty Reedy,

Enclosed is a copy of your laboratory report for test samples received by our laboratory on Tuesday, January 15, 2008.

Unless otherwise noted in an attached project narrative, all samples were received in acceptable condition and processed in accordance with the referenced methods/procedures. Results for these procedures apply only to the samples as submitted.

The analytical results contained in this report are in compliance with NELAC standards, except as noted in the project narrative. This report shall not be reproduced except in full, without the written approval of the Laboratory.

This report contains only those analyses performed by Environmental Conservation Laboratories. Unless otherwise noted, all analyses were performed at ENCO Cary. Data from outside organizations will be reported under separate cover.

If you have any questions or require further information, please do not hesitate to contact me.

Sincerely,

Stephanie Franz

Project Manager

Enclosure(s)

The total number of pages in this report, including this page is 19.

PROJECT NARRATIVE

Date: 24 January 2008
Client: Golder Associates
Project: Republic- Upper Piedmont Landfill- SWs
Lab ID: C717603

Overview

All samples submitted were analyzed by Environmental Conservation Laboratories, Inc. in accordance with the methods referenced in the laboratory report. Any particular difficulties encountered during sample handling by Environmental Conservation Laboratories, Inc. will be discussed in the QC Remarks section below.

Quality Control Samples

No comments

Quality Control Remarks

No comments

Other Comments

All samples received under this work order arrived in acceptable conditions. The samples were not checked for residual chlorine, as it is not required. Sample 0803-SW3 was not received, as the source was dry.

The analytical data presented in this report are consistent with the methods as referenced in the analytical report. Any exceptions or deviations are noted in the QC remarks section of this narrative.

Released By:
Environmental Conservation Laboratories, Inc.

Stephanie Franz
Project Manager

www.encolabs.com

SAMPLE SUMMARY/LABORATORY CHRONICLE

Client ID: 0803-SW1	Lab ID: C717603-01	Sampled: 01/15/08 12:24	Received: 01/15/08 17:20

Parameter	Hold Date/Time(s)	Prep Date/Time(s)	Analysis Date/Time(s)
EPA 6010B	07/13/08	01/16/08 10:17	1/23/2008 14:47
EPA 6020	07/13/08	01/16/08 10:23	1/17/2008 11:16
EPA 8260B	01/29/08	01/15/08 12:52	1/16/2008 20:20

Client ID: 0803-SW2	Lab ID: C717603-02	Sampled: 01/15/08 12:00	Received: 01/15/08 17:20

Parameter	Hold Date/Time(s)	Prep Date/Time(s)	Analysis Date/Time(s)
EPA 6010B	07/13/08	01/16/08 10:17	1/23/2008 15:10
EPA 6020	07/13/08	01/16/08 10:23	1/17/2008 11:07
EPA 8260B	01/29/08	01/15/08 12:52	1/16/2008 20:49

Client ID: 0803-SW4	Lab ID: C717603-04	Sampled: 01/15/08 11:30	Received: 01/15/08 17:20

Parameter	Hold Date/Time(s)	Prep Date/Time(s)	Analysis Date/Time(s)
EPA 6010B	07/13/08	01/16/08 10:17	1/23/2008 15:17
EPA 6020	07/13/08	01/16/08 10:23	1/17/2008 11:18
EPA 8260B	01/29/08	01/15/08 12:52	1/16/2008 21:18

www.encolabs.com

NORTH CAROLINA SWS SAMPLE DETECTION SUMMARY

Client ID: 0803-SW1 **Lab ID:** C717603-01

Analyte	Results	Flag	DF	MDL	MRL	NC SWSL	Units	Method	Notes
Barium	81.3	J	1	0.20	10.0	100	ug/L	EPA 6010B	
Thallium	0.039	J	1	0.036	1.00	5.5	ug/L	EPA 6020	
Vanadium	4.1	J	1	1.0	10.0	25	ug/L	EPA 6010B	
Zinc	8.7	J	1	1.0	10.0	10	ug/L	EPA 6010B	

Client ID: 0803-SW2 **Lab ID:** C717603-02

Analyte	Results	Flag	DF	MDL	MRL	NC SWSL	Units	Method	Notes
Barium	92.1	J	1	0.20	10.0	100	ug/L	EPA 6010B	
Cobalt	2.9	J	1	2.0	10.0	10	ug/L	EPA 6010B	
Nickel	2.4	J	1	2.0	10.0	50	ug/L	EPA 6010B	
Thallium	0.056	J	1	0.036	1.00	5.5	ug/L	EPA 6020	
Zinc	13.6		1	1.0	10.0	10	ug/L	EPA 6010B	

Client ID: 0803-SW4 **Lab ID:** C717603-04

Analyte	Results	Flag	DF	MDL	MRL	NC SWSL	Units	Method	Notes
Arsenic	2.6	J	1	2.0	10.0	10	ug/L	EPA 6010B	
Barium	24.1	J	1	0.20	10.0	100	ug/L	EPA 6010B	
Vanadium	1.0	J	1	1.0	10.0	25	ug/L	EPA 6010B	
Zinc	5.7	J	1	1.0	10.0	10	ug/L	EPA 6010B	

www.encolabs.com

ANALYTICAL RESULTS

Description: 0803-SW1
Matrix: Surface Water
Project: Republic-East Carolina Landfill-SWs

Lab Sample ID: C717603-01
Sampled: 01/15/08 12:24
Sampled By: K. Higgs/R. Stringfellow

Received: 01/15/08 17:20
Work Order: C717603

Volatile Organic Compounds by GCMS

** - ENCO Cary certified analyte [NC 591]*

Analyte [CAS Number]	Results	Flag	Units	DF	MDL	MRL	NC SWSL	Method	Analyzed	By	Notes
1,1,1,2-Tetrachloroethane [630-20-6] *	0.16	U	ug/L	1	0.16	1.0	5	EPA 8260B	01/16/08 20:20	jkg	
1,1,1-Trichloroethane [71-55-6] *	0.24	U	ug/L	1	0.24	1.0	1	EPA 8260B	01/16/08 20:20	jkg	
1,1,2,2-Tetrachloroethane [79-34-5] *	0.27	U	ug/L	1	0.27	1.0	3	EPA 8260B	01/16/08 20:20	jkg	
1,1,2-Trichloroethane [79-00-5] *	0.24	U	ug/L	1	0.24	1.0	1	EPA 8260B	01/16/08 20:20	jkg	
1,1-Dichloroethane [75-34-3] *	0.090	U	ug/L	1	0.090	1.0	5	EPA 8260B	01/16/08 20:20	jkg	
1,1-Dichloroethene [75-35-4] *	0.14	U	ug/L	1	0.14	1.0	5	EPA 8260B	01/16/08 20:20	jkg	
1,2,3-Trichloropropane [96-18-4] *	0.32	U	ug/L	1	0.32	1.0	1	EPA 8260B	01/16/08 20:20	jkg	
1,2-Dibromo-3-chloropropane [96-12-8] *	0.19	U	ug/L	1	0.19	1.0	13	EPA 8260B	01/16/08 20:20	jkg	
1,2-Dibromoethane [106-93-4] *	0.19	U	ug/L	1	0.19	1.0	1	EPA 8260B	01/16/08 20:20	jkg	
1,2-Dichlorobenzene [95-50-1] *	0.17	U	ug/L	1	0.17	1.0	5	EPA 8260B	01/16/08 20:20	jkg	
1,2-Dichloroethane [107-06-2] *	0.36	U	ug/L	1	0.36	1.0	1	EPA 8260B	01/16/08 20:20	jkg	
1,2-Dichloropropane [78-87-5] *	0.18	U	ug/L	1	0.18	1.0	1	EPA 8260B	01/16/08 20:20	jkg	
1,4-Dichlorobenzene [106-46-7] *	0.15	U	ug/L	1	0.15	1.0	1	EPA 8260B	01/16/08 20:20	jkg	
2-Butanone [78-93-3] *	0.56	U	ug/L	1	0.56	5.0	100	EPA 8260B	01/16/08 20:20	jkg	
2-Hexanone [591-78-6] *	0.24	U	ug/L	1	0.24	5.0	50	EPA 8260B	01/16/08 20:20	jkg	
4-Methyl-2-pentanone [108-10-1] *	0.36	U	ug/L	1	0.36	5.0	100	EPA 8260B	01/16/08 20:20	jkg	
Acetone [67-64-1] *	0.90	U	ug/L	1	0.90	5.0	100	EPA 8260B	01/16/08 20:20	jkg	
Acrylonitrile [107-13-1] *	2.0	U	ug/L	1	2.0	5.0	200	EPA 8260B	01/16/08 20:20	jkg	
Benzene [71-43-2] *	0.12	U	ug/L	1	0.12	1.0	1	EPA 8260B	01/16/08 20:20	jkg	
Bromochloromethane [74-97-5] *	0.19	U	ug/L	1	0.19	1.0	3	EPA 8260B	01/16/08 20:20	jkg	
Bromodichloromethane [75-27-4] *	0.19	U	ug/L	1	0.19	0.40	1	EPA 8260B	01/16/08 20:20	jkg	
Bromoform [75-25-2] *	0.36	U	ug/L	1	0.36	1.0	3	EPA 8260B	01/16/08 20:20	jkg	
Bromomethane [74-83-9] *	0.21	U	ug/L	1	0.21	1.0	10	EPA 8260B	01/16/08 20:20	jkg	
Carbon disulfide [75-15-0] *	0.12	U	ug/L	1	0.12	5.0	100	EPA 8260B	01/16/08 20:20	jkg	
Carbon tetrachloride [56-23-5] *	0.38	U	ug/L	1	0.38	1.0	1	EPA 8260B	01/16/08 20:20	jkg	
Chlorobenzene [108-90-7] *	0.16	U	ug/L	1	0.16	1.0	3	EPA 8260B	01/16/08 20:20	jkg	
Chloroethane [75-00-3] *	0.40	U	ug/L	1	0.40	1.0	10	EPA 8260B	01/16/08 20:20	jkg	
Chloroform [67-66-3] *	0.16	U	ug/L	1	0.16	1.0	5	EPA 8260B	01/16/08 20:20	jkg	
Chloromethane [74-87-3] *	0.18	U	ug/L	1	0.18	1.0	1	EPA 8260B	01/16/08 20:20	jkg	
cis-1,2-Dichloroethene [156-59-2] *	0.14	U	ug/L	1	0.14	1.0	5	EPA 8260B	01/16/08 20:20	jkg	
cis-1,3-Dichloropropene [10061-01-5] *	0.16	U	ug/L	1	0.16	0.20	1	EPA 8260B	01/16/08 20:20	jkg	
Dibromochloromethane [124-48-1] *	0.18	U	ug/L	1	0.18	1.0	3	EPA 8260B	01/16/08 20:20	jkg	
Dibromomethane [74-95-3] *	0.14	U	ug/L	1	0.14	1.0	10	EPA 8260B	01/16/08 20:20	jkg	
Ethylbenzene [100-41-4] *	0.17	U	ug/L	1	0.17	1.0	1	EPA 8260B	01/16/08 20:20	jkg	
Iodomethane [74-88-4] *	0.23	U	ug/L	1	0.23	2.0	10	EPA 8260B	01/16/08 20:20	jkg	
Methylene chloride [75-09-2] *	0.088	U	ug/L	1	0.088	1.0	1	EPA 8260B	01/16/08 20:20	jkg	
Styrene [100-42-5] *	0.12	U	ug/L	1	0.12	1.0	1	EPA 8260B	01/16/08 20:20	jkg	
Tetrachloroethene [127-18-4] *	0.25	U	ug/L	1	0.25	1.0	1	EPA 8260B	01/16/08 20:20	jkg	
Toluene [108-88-3] *	0.15	U	ug/L	1	0.15	1.0	1	EPA 8260B	01/16/08 20:20	jkg	
trans-1,2-Dichloroethene [156-60-5] *	0.10	U	ug/L	1	0.10	1.0	5	EPA 8260B	01/16/08 20:20	jkg	
trans-1,3-Dichloropropene [10061-02-6] *	0.18	U	ug/L	1	0.18	0.20	1	EPA 8260B	01/16/08 20:20	jkg	
trans-1,4-Dichloro-2-butene [110-57-6] *	0.60	U	ug/L	1	0.60	1.0	100	EPA 8260B	01/16/08 20:20	jkg	
Trichloroethene [79-01-6] *	0.23	U	ug/L	1	0.23	1.0	1	EPA 8260B	01/16/08 20:20	jkg	

www.encolabs.com

Description:	0803-SW1	**Lab Sample ID:**	C717603-01	**Received:**	01/15/08 17:20
Matrix:	Surface Water	**Sampled:**	01/15/08 12:24	**Work Order:**	C717603
Project:	Republic-East Carolina Landfill-SWs	**Sampled By:**	K. Higgs/R. Stringfellow		

Volatile Organic Compounds by GCMS

** - ENCO Cary certified analyte [NC 591]*

Analyte [CAS Number]	Results	Flag	Units	DF	MDL	MRL	NC SWSL	Method	Analyzed	By	Notes
Trichlorofluoromethane [75-69-4] *	0.16	U	ug/L	1	0.16	1.0	1	EPA 8260B	01/16/08 20:20	jkg	
Vinyl acetate [108-05-4] *	0.19	U	ug/L	1	0.19	2.0	50	EPA 8260B	01/16/08 20:20	jkg	
Vinyl chloride [75-01-4] *	0.15	U	ug/L	1	0.15	1.0	1	EPA 8260B	01/16/08 20:20	jkg	
Xylenes (Total) [1330-20-7]	0.21	U	ug/L	1	0.21	1.0	5	EPA 8260B	01/16/08 20:20	jkg	

Surrogates	*Results*	*DF*	*Spike Lvl*	*% Rec*	*% Rec Limits*	*Batch*	*Method*	*Analyzed*	*By*	Notes
4-Bromofluorobenzene	*46*	*1*	*50.0*	*92 %*	*69-120*	*8A16004*	*EPA 8260B*	*01/16/08 20:20*	*jkg*	
Dibromofluoromethane	*51*	*1*	*50.0*	*102 %*	*61-120*	*8A16004*	*EPA 8260B*	*01/16/08 20:20*	*jkg*	
Toluene-d8	*44*	*1*	*50.0*	*87 %*	*75-99*	*8A16004*	*EPA 8260B*	*01/16/08 20:20*	*jkg*	

www.encolabs.com

Description:	0803-SW1	**Lab Sample ID:**	C717603-01	**Received:**	01/15/08 17:20
Matrix:	Surface Water	**Sampled:**	01/15/08 12:24	**Work Order:**	C717603
Project:	Republic-East Carolina Landfill-SWs	**Sampled By:**	K. Higgs/R. Stringfellow		

Metals by EPA 6000/7000 Series Methods

** - ENCO Cary certified analyte [NC 591]*

Analyte [CAS Number]	Results	Flag	Units	DF	MDL	MRL	NC SWSL	Method	Analyzed	By	Notes
Antimony [7440-36-0] *	0.68	U	ug/L	1	0.68	2.00	6	EPA 6020	01/17/08 11:16	JDH	
Arsenic [7440-38-2] *	2.0	U	ug/L	1	2.0	10.0	10	EPA 6010B	01/23/08 14:47	VLO	
Barium [7440-39-3] *	**81.3**	J	ug/L	1	0.20	10.0	100	EPA 6010B	01/23/08 14:47	VLO	
Beryllium [7440-41-7] *	0.70	U	ug/L	1	0.70	1.00	1	EPA 6010B	01/23/08 14:47	VLO	
Cadmium [7440-43-9] *	0.50	U	ug/L	1	0.50	1.00	1	EPA 6010B	01/23/08 14:47	VLO	
Chromium [7440-47-3] *	2.0	U	ug/L	1	2.0	10.0	10	EPA 6010B	01/23/08 14:47	VLO	
Cobalt [7440-48-4] *	2.0	U	ug/L	1	2.0	10.0	10	EPA 6010B	01/23/08 14:47	VLO	
Copper [7440-50-8] *	0.60	U	ug/L	1	0.60	10.0	10	EPA 6010B	01/23/08 14:47	VLO	
Lead [7439-92-1] *	2.0	U	ug/L	1	2.0	10.0	10	EPA 6010B	01/23/08 14:47	VLO	
Nickel [7440-02-0] *	2.0	U	ug/L	1	2.0	10.0	50	EPA 6010B	01/23/08 14:47	VLO	
Selenium [7782-49-2] *	2.0	U	ug/L	1	2.0	10.0	10	EPA 6010B	01/23/08 14:47	VLO	
Silver [7440-22-4] *	2.0	U	ug/L	1	2.0	10.0	10	EPA 6010B	01/23/08 14:47	VLO	
Thallium [7440-28-0] *	**0.039**	J	ug/L	1	0.036	1.00	5.5	EPA 6020	01/17/08 11:16	JDH	
Vanadium [7440-62-2] *	**4.1**	J	ug/L	1	1.0	10.0	25	EPA 6010B	01/23/08 14:47	VLO	
Zinc [7440-66-6] *	**8.7**	J	ug/L	1	1.0	10.0	10	EPA 6010B	01/23/08 14:47	VLO	

This report relates only to the sample as received by the laboratory, and may only be reproduced in full.

www.encolabs.com

Description: 0803-SW2
Matrix: Surface Water
Project: Republic-East Carolina Landfill-SWs

Lab Sample ID: C717603-02
Sampled: 01/15/08 12:00
Sampled By: K. Higgs/R. Stringfellow

Received: 01/15/08 17:20
Work Order: C717603

Volatile Organic Compounds by GCMS

** - ENCO Cary certified analyte [NC 591]*

Analyte [CAS Number]	Results	Flag	Units	DF	MDL	MRL	NC SWSL	Method	Analyzed	By	Notes
1,1,1,2-Tetrachloroethane [630-20-6] *	0.16	U	ug/L	1	0.16	1.0	5	EPA 8260B	01/16/08 20:49	jkg	
1,1,1-Trichloroethane [71-55-6] *	0.24	U	ug/L	1	0.24	1.0	1	EPA 8260B	01/16/08 20:49	jkg	
1,1,2,2-Tetrachloroethane [79-34-5] *	0.27	U	ug/L	1	0.27	1.0	3	EPA 8260B	01/16/08 20:49	jkg	
1,1,2-Trichloroethane [79-00-5] *	0.24	U	ug/L	1	0.24	1.0	1	EPA 8260B	01/16/08 20:49	jkg	
1,1-Dichloroethane [75-34-3] *	0.090	U	ug/L	1	0.090	1.0	5	EPA 8260B	01/16/08 20:49	jkg	
1,1-Dichloroethene [75-35-4] *	0.14	U	ug/L	1	0.14	1.0	5	EPA 8260B	01/16/08 20:49	jkg	
1,2,3-Trichloropropane [96-18-4] *	0.32	U	ug/L	1	0.32	1.0	1	EPA 8260B	01/16/08 20:49	jkg	
1,2-Dibromo-3-chloropropane [96-12-8] *	0.19	U	ug/L	1	0.19	1.0	13	EPA 8260B	01/16/08 20:49	jkg	
1,2-Dibromoethane [106-93-4] *	0.19	U	ug/L	1	0.19	1.0	1	EPA 8260B	01/16/08 20:49	jkg	
1,2-Dichlorobenzene [95-50-1] *	0.17	U	ug/L	1	0.17	1.0	5	EPA 8260B	01/16/08 20:49	jkg	
1,2-Dichloroethane [107-06-2] *	0.36	U	ug/L	1	0.36	1.0	1	EPA 8260B	01/16/08 20:49	jkg	
1,2-Dichloropropane [78-87-5] *	0.18	U	ug/L	1	0.18	1.0	1	EPA 8260B	01/16/08 20:49	jkg	
1,4-Dichlorobenzene [106-46-7] *	0.15	U	ug/L	1	0.15	1.0	1	EPA 8260B	01/16/08 20:49	jkg	
2-Butanone [78-93-3] *	0.56	U	ug/L	1	0.56	5.0	100	EPA 8260B	01/16/08 20:49	jkg	
2-Hexanone [591-78-6] *	0.24	U	ug/L	1	0.24	5.0	50	EPA 8260B	01/16/08 20:49	jkg	
4-Methyl-2-pentanone [108-10-1] *	0.36	U	ug/L	1	0.36	5.0	100	EPA 8260B	01/16/08 20:49	jkg	
Acetone [67-64-1] *	0.90	U	ug/L	1	0.90	5.0	100	EPA 8260B	01/16/08 20:49	jkg	
Acrylonitrile [107-13-1] *	2.0	U	ug/L	1	2.0	5.0	200	EPA 8260B	01/16/08 20:49	jkg	
Benzene [71-43-2] *	0.12	U	ug/L	1	0.12	1.0	1	EPA 8260B	01/16/08 20:49	jkg	
Bromochloromethane [74-97-5] *	0.19	U	ug/L	1	0.19	1.0	3	EPA 8260B	01/16/08 20:49	jkg	
Bromodichloromethane [75-27-4] *	0.19	U	ug/L	1	0.19	0.40	1	EPA 8260B	01/16/08 20:49	jkg	
Bromoform [75-25-2] *	0.36	U	ug/L	1	0.36	1.0	3	EPA 8260B	01/16/08 20:49	jkg	
Bromomethane [74-83-9] *	0.21	U	ug/L	1	0.21	1.0	10	EPA 8260B	01/16/08 20:49	jkg	
Carbon disulfide [75-15-0] *	0.12	U	ug/L	1	0.12	5.0	100	EPA 8260B	01/16/08 20:49	jkg	
Carbon tetrachloride [56-23-5] *	0.38	U	ug/L	1	0.38	1.0	1	EPA 8260B	01/16/08 20:49	jkg	
Chlorobenzene [108-90-7] *	0.16	U	ug/L	1	0.16	1.0	3	EPA 8260B	01/16/08 20:49	jkg	
Chloroethane [75-00-3] *	0.40	U	ug/L	1	0.40	1.0	10	EPA 8260B	01/16/08 20:49	jkg	
Chloroform [67-66-3] *	0.16	U	ug/L	1	0.16	1.0	5	EPA 8260B	01/16/08 20:49	jkg	
Chloromethane [74-87-3] *	0.18	U	ug/L	1	0.18	1.0	1	EPA 8260B	01/16/08 20:49	jkg	
cis-1,2-Dichloroethene [156-59-2] *	0.14	U	ug/L	1	0.14	1.0	5	EPA 8260B	01/16/08 20:49	jkg	
cis-1,3-Dichloropropene [10061-01-5] *	0.16	U	ug/L	1	0.16	0.20	1	EPA 8260B	01/16/08 20:49	jkg	
Dibromochloromethane [124-48-1] *	0.18	U	ug/L	1	0.18	1.0	3	EPA 8260B	01/16/08 20:49	jkg	
Dibromomethane [74-95-3] *	0.14	U	ug/L	1	0.14	1.0	10	EPA 8260B	01/16/08 20:49	jkg	
Ethylbenzene [100-41-4] *	0.17	U	ug/L	1	0.17	1.0	1	EPA 8260B	01/16/08 20:49	jkg	
Iodomethane [74-88-4] *	0.23	U	ug/L	1	0.23	2.0	10	EPA 8260B	01/16/08 20:49	jkg	
Methylene chloride [75-09-2] *	0.088	U	ug/L	1	0.088	1.0	1	EPA 8260B	01/16/08 20:49	jkg	
Styrene [100-42-5] *	0.12	U	ug/L	1	0.12	1.0	1	EPA 8260B	01/16/08 20:49	jkg	
Tetrachloroethene [127-18-4] *	0.25	U	ug/L	1	0.25	1.0	1	EPA 8260B	01/16/08 20:49	jkg	
Toluene [108-88-3] *	0.15	U	ug/L	1	0.15	1.0	1	EPA 8260B	01/16/08 20:49	jkg	
trans-1,2-Dichloroethene [156-60-5] *	0.10	U	ug/L	1	0.10	1.0	5	EPA 8260B	01/16/08 20:49	jkg	
trans-1,3-Dichloropropene [10061-02-6] *	0.18	U	ug/L	1	0.18	0.20	1	EPA 8260B	01/16/08 20:49	jkg	
trans-1,4-Dichloro-2-butene [110-57-6] *	0.60	U	ug/L	1	0.60	1.0	100	EPA 8260B	01/16/08 20:49	jkg	
Trichloroethene [79-01-6] *	0.23	U	ug/L	1	0.23	1.0	1	EPA 8260B	01/16/08 20:49	jkg	
Trichlorofluoromethane [75-69-4] *	0.16	U	ug/L	1	0.16	1.0	1	EPA 8260B	01/16/08 20:49	jkg	
Vinyl acetate [108-05-4] *	0.19	U	ug/L	1	0.19	2.0	50	EPA 8260B	01/16/08 20:49	jkg	
Vinyl chloride [75-01-4] *	0.15	U	ug/L	1	0.15	1.0	1	EPA 8260B	01/16/08 20:49	jkg	

www.encolabs.com

Description:	0803-SW2	**Lab Sample ID:**	C717603-02	**Received:**	01/15/08 17:20
Matrix:	Surface Water	**Sampled:**	01/15/08 12:00	**Work Order:**	C717603
Project:	Republic-East Carolina Landfill-SWs	**Sampled By:**	K. Higgs/R. Stringfellow		

Volatile Organic Compounds by GCMS

** - ENCO Cary certified analyte [NC 591]*

Analyte [CAS Number]	Results	Flag	Units	DF	MDL	MRL	NC SWSL	Method	Analyzed	By	Notes
Xylenes (Total) [1330-20-7]	0.21	U	ug/L	1	0.21	1.0	5	EPA 8260B	01/16/08 20:49	jkg	

Surrogates	*Results*	*DF*	*Spike Lvl*	*% Rec*	*% Rec Limits*	*Batch*	*Method*	*Analyzed*	*By*	Notes
4-Bromofluorobenzene	*46*	*1*	*50.0*	*92 %*	*69-120*	*8A16004*	*EPA 8260B*	*01/16/08 20:49*	*jkg*	
Dibromofluoromethane	*52*	*1*	*50.0*	*105 %*	*61-120*	*8A16004*	*EPA 8260B*	*01/16/08 20:49*	*jkg*	
Toluene-d8	*42*	*1*	*50.0*	*84 %*	*75-99*	*8A16004*	*EPA 8260B*	*01/16/08 20:49*	*jkg*	

www.encolabs.com

Description: 0803-SW2
Matrix: Surface Water
Project: Republic-East Carolina Landfill-SWs

Lab Sample ID: C717603-02
Sampled: 01/15/08 12:00
Sampled By: K. Higgs/R. Stringfellow

Received: 01/15/08 17:20
Work Order: C717603

Metals by EPA 6000/7000 Series Methods

** - ENCO Cary certified analyte [NC 591]*

Analyte [CAS Number]	Results	Flag	Units	DF	MDL	MRL	NC SWSL	Method	Analyzed	By	Notes
Antimony [7440-36-0] *	0.68	U	ug/L	1	0.68	2.00	6	EPA 6020	01/17/08 11:07	JDH	
Arsenic [7440-38-2] *	2.0	U	ug/L	1	2.0	10.0	10	EPA 6010B	01/23/08 15:10	VLO	
Barium [7440-39-3] *	**92.1**	J	ug/L	1	0.20	10.0	100	EPA 6010B	01/23/08 15:10	VLO	
Beryllium [7440-41-7] *	0.70	U	ug/L	1	0.70	1.00	1	EPA 6010B	01/23/08 15:10	VLO	
Cadmium [7440-43-9] *	0.50	U	ug/L	1	0.50	1.00	1	EPA 6010B	01/23/08 15:10	VLO	
Chromium [7440-47-3] *	2.0	U	ug/L	1	2.0	10.0	10	EPA 6010B	01/23/08 15:10	VLO	
Cobalt [7440-48-4] *	**2.9**	J	ug/L	1	2.0	10.0	10	EPA 6010B	01/23/08 15:10	VLO	
Copper [7440-50-8] *	0.60	U	ug/L	1	0.60	10.0	10	EPA 6010B	01/23/08 15:10	VLO	
Lead [7439-92-1] *	2.0	U	ug/L	1	2.0	10.0	10	EPA 6010B	01/23/08 15:10	VLO	
Nickel [7440-02-0] *	**2.4**	J	ug/L	1	2.0	10.0	50	EPA 6010B	01/23/08 15:10	VLO	
Selenium [7782-49-2] *	2.0	U	ug/L	1	2.0	10.0	10	EPA 6010B	01/23/08 15:10	VLO	
Silver [7440-22-4] *	2.0	U	ug/L	1	2.0	10.0	10	EPA 6010B	01/23/08 15:10	VLO	
Thallium [7440-28-0] *	**0.056**	J	ug/L	1	0.036	1.00	5.5	EPA 6020	01/17/08 11:07	JDH	
Vanadium [7440-62-2] *	1.0	U	ug/L	1	1.0	10.0	25	EPA 6010B	01/23/08 15:10	VLO	
Zinc [7440-66-6] *	**13.6**		ug/L	1	1.0	10.0	10	EPA 6010B	01/23/08 15:10	VLO	

This report relates only to the sample as received by the laboratory, and may only be reproduced in full.

www.encolabs.com

Description: 0803-SW4
Matrix: Surface Water
Project: Republic-East Carolina Landfill-SWs

Lab Sample ID: C717603-04
Sampled: 01/15/08 11:30
Sampled By: K. Higgs/R. Stringfellow

Received: 01/15/08 17:20
Work Order: C717603

Volatile Organic Compounds by GCMS

** - ENCO Cary certified analyte [NC 591]*

Analyte [CAS Number]	Results	Flag	Units	DF	MDL	MRL	NC SWSL	Method	Analyzed	By	Notes
1,1,1,2-Tetrachloroethane [630-20-6] *	0.16	U	ug/L	1	0.16	1.0	5	EPA 8260B	01/16/08 21:18	jkg	
1,1,1-Trichloroethane [71-55-6] *	0.24	U	ug/L	1	0.24	1.0	1	EPA 8260B	01/16/08 21:18	jkg	
1,1,2,2-Tetrachloroethane [79-34-5] *	0.27	U	ug/L	1	0.27	1.0	3	EPA 8260B	01/16/08 21:18	jkg	
1,1,2-Trichloroethane [79-00-5] *	0.24	U	ug/L	1	0.24	1.0	1	EPA 8260B	01/16/08 21:18	jkg	
1,1-Dichloroethane [75-34-3] *	0.090	U	ug/L	1	0.090	1.0	5	EPA 8260B	01/16/08 21:18	jkg	
1,1-Dichloroethene [75-35-4] *	0.14	U	ug/L	1	0.14	1.0	5	EPA 8260B	01/16/08 21:18	jkg	
1,2,3-Trichloropropane [96-18-4] *	0.32	U	ug/L	1	0.32	1.0	1	EPA 8260B	01/16/08 21:18	jkg	
1,2-Dibromo-3-chloropropane [96-12-8] *	0.19	U	ug/L	1	0.19	1.0	13	EPA 8260B	01/16/08 21:18	jkg	
1,2-Dibromoethane [106-93-4] *	0.19	U	ug/L	1	0.19	1.0	1	EPA 8260B	01/16/08 21:18	jkg	
1,2-Dichlorobenzene [95-50-1] *	0.17	U	ug/L	1	0.17	1.0	5	EPA 8260B	01/16/08 21:18	jkg	
1,2-Dichloroethane [107-06-2] *	0.36	U	ug/L	1	0.36	1.0	1	EPA 8260B	01/16/08 21:18	jkg	
1,2-Dichloropropane [78-87-5] *	0.18	U	ug/L	1	0.18	1.0	1	EPA 8260B	01/16/08 21:18	jkg	
1,4-Dichlorobenzene [106-46-7] *	0.15	U	ug/L	1	0.15	1.0	1	EPA 8260B	01/16/08 21:18	jkg	
2-Butanone [78-93-3] *	0.56	U	ug/L	1	0.56	5.0	100	EPA 8260B	01/16/08 21:18	jkg	
2-Hexanone [591-78-6] *	0.24	U	ug/L	1	0.24	5.0	50	EPA 8260B	01/16/08 21:18	jkg	
4-Methyl-2-pentanone [108-10-1] *	0.36	U	ug/L	1	0.36	5.0	100	EPA 8260B	01/16/08 21:18	jkg	
Acetone [67-64-1] *	0.90	U	ug/L	1	0.90	5.0	100	EPA 8260B	01/16/08 21:18	jkg	
Acrylonitrile [107-13-1] *	2.0	U	ug/L	1	2.0	5.0	200	EPA 8260B	01/16/08 21:18	jkg	
Benzene [71-43-2] *	0.12	U	ug/L	1	0.12	1.0	1	EPA 8260B	01/16/08 21:18	jkg	
Bromochloromethane [74-97-5] *	0.19	U	ug/L	1	0.19	1.0	3	EPA 8260B	01/16/08 21:18	jkg	
Bromodichloromethane [75-27-4] *	0.19	U	ug/L	1	0.19	0.40	1	EPA 8260B	01/16/08 21:18	jkg	
Bromoform [75-25-2] *	0.36	U	ug/L	1	0.36	1.0	3	EPA 8260B	01/16/08 21:18	jkg	
Bromomethane [74-83-9] *	0.21	U	ug/L	1	0.21	1.0	10	EPA 8260B	01/16/08 21:18	jkg	
Carbon disulfide [75-15-0] *	0.12	U	ug/L	1	0.12	5.0	100	EPA 8260B	01/16/08 21:18	jkg	
Carbon tetrachloride [56-23-5] *	0.38	U	ug/L	1	0.38	1.0	1	EPA 8260B	01/16/08 21:18	jkg	
Chlorobenzene [108-90-7] *	0.16	U	ug/L	1	0.16	1.0	3	EPA 8260B	01/16/08 21:18	jkg	
Chloroethane [75-00-3] *	0.40	U	ug/L	1	0.40	1.0	10	EPA 8260B	01/16/08 21:18	jkg	
Chloroform [67-66-3] *	0.16	U	ug/L	1	0.16	1.0	5	EPA 8260B	01/16/08 21:18	jkg	
Chloromethane [74-87-3] *	0.18	U	ug/L	1	0.18	1.0	1	EPA 8260B	01/16/08 21:18	jkg	
cis-1,2-Dichloroethene [156-59-2] *	0.14	U	ug/L	1	0.14	1.0	5	EPA 8260B	01/16/08 21:18	jkg	
cis-1,3-Dichloropropene [10061-01-5] *	0.16	U	ug/L	1	0.16	0.20	1	EPA 8260B	01/16/08 21:18	jkg	
Dibromochloromethane [124-48-1] *	0.18	U	ug/L	1	0.18	1.0	3	EPA 8260B	01/16/08 21:18	jkg	
Dibromomethane [74-95-3] *	0.14	U	ug/L	1	0.14	1.0	10	EPA 8260B	01/16/08 21:18	jkg	
Ethylbenzene [100-41-4] *	0.17	U	ug/L	1	0.17	1.0	1	EPA 8260B	01/16/08 21:18	jkg	
Iodomethane [74-88-4] *	0.23	U	ug/L	1	0.23	2.0	10	EPA 8260B	01/16/08 21:18	jkg	
Methylene chloride [75-09-2] *	0.088	U	ug/L	1	0.088	1.0	1	EPA 8260B	01/16/08 21:18	jkg	
Styrene [100-42-5] *	0.12	U	ug/L	1	0.12	1.0	1	EPA 8260B	01/16/08 21:18	jkg	
Tetrachloroethene [127-18-4] *	0.25	U	ug/L	1	0.25	1.0	1	EPA 8260B	01/16/08 21:18	jkg	
Toluene [108-88-3] *	0.15	U	ug/L	1	0.15	1.0	1	EPA 8260B	01/16/08 21:18	jkg	
trans-1,2-Dichloroethene [156-60-5] *	0.10	U	ug/L	1	0.10	1.0	5	EPA 8260B	01/16/08 21:18	jkg	
trans-1,3-Dichloropropene [10061-02-6] *	0.18	U	ug/L	1	0.18	0.20	1	EPA 8260B	01/16/08 21:18	jkg	
trans-1,4-Dichloro-2-butene [110-57-6] *	0.60	U	ug/L	1	0.60	1.0	100	EPA 8260B	01/16/08 21:18	jkg	
Trichloroethene [79-01-6] *	0.23	U	ug/L	1	0.23	1.0	1	EPA 8260B	01/16/08 21:18	jkg	
Trichlorofluoromethane [75-69-4] *	0.16	U	ug/L	1	0.16	1.0	1	EPA 8260B	01/16/08 21:18	jkg	
Vinyl acetate [108-05-4] *	0.19	U	ug/L	1	0.19	2.0	50	EPA 8260B	01/16/08 21:18	jkg	
Vinyl chloride [75-01-4] *	0.15	U	ug/L	1	0.15	1.0	1	EPA 8260B	01/16/08 21:18	jkg	

www.encolabs.com

Description:	0803-SW4	**Lab Sample ID:**	C717603-04	**Received:**	01/15/08 17:20
Matrix:	Surface Water	**Sampled:**	01/15/08 11:30	**Work Order:**	C717603
Project:	Republic-East Carolina Landfill-SWs	**Sampled By:**	K. Higgs/R. Stringfellow		

Volatile Organic Compounds by GCMS

** - ENCO Cary certified analyte [NC 591]*

Analyte [CAS Number]	Results	Flag	Units	DF	MDL	MRL	NC SWSL	Method	Analyzed	By	Notes
Xylenes (Total) [1330-20-7]	0.21	U	ug/L	1	0.21	1.0	5	EPA 8260B	01/16/08 21:18	jkg	

Surrogates	*Results*	*DF*	*Spike Lvl*	*% Rec*	*% Rec Limits*	*Batch*	*Method*	*Analyzed*	*By*	Notes
4-Bromofluorobenzene	*43*	*1*	*50.0*	*86 %*	*69-120*	*8A16004*	*EPA 8260B*	*01/16/08 21:18*	*jkg*	
Dibromofluoromethane	*53*	*1*	*50.0*	*105 %*	*61-120*	*8A16004*	*EPA 8260B*	*01/16/08 21:18*	*jkg*	
Toluene-d8	*43*	*1*	*50.0*	*85 %*	*75-99*	*8A16004*	*EPA 8260B*	*01/16/08 21:18*	*jkg*	

www.encolabs.com

Description:	0803-SW4	**Lab Sample ID:**	C717603-04	**Received:**	01/15/08 17:20
Matrix:	Surface Water	**Sampled:**	01/15/08 11:30	**Work Order:**	C717603
Project:	Republic-East Carolina Landfill-SWs	**Sampled By:**	K. Higgs/R. Stringfellow		

Metals by EPA 6000/7000 Series Methods

** - ENCO Cary certified analyte [NC 591]*

Analyte [CAS Number]	Results	Flag	Units	DF	MDL	MRL	NC SWSL	Method	Analyzed	By	Notes
Antimony [7440-36-0] *	0.68	U	ug/L	1	0.68	2.00	6	EPA 6020	01/17/08 11:18	JDH	
Arsenic [7440-38-2] *	**2.6**	J	ug/L	1	2.0	10.0	10	EPA 6010B	01/23/08 15:17	VLO	
Barium [7440-39-3] *	**24.1**	J	ug/L	1	0.20	10.0	100	EPA 6010B	01/23/08 15:17	VLO	
Beryllium [7440-41-7] *	0.70	U	ug/L	1	0.70	1.00	1	EPA 6010B	01/23/08 15:17	VLO	
Cadmium [7440-43-9] *	0.50	U	ug/L	1	0.50	1.00	1	EPA 6010B	01/23/08 15:17	VLO	
Chromium [7440-47-3] *	2.0	U	ug/L	1	2.0	10.0	10	EPA 6010B	01/23/08 15:17	VLO	
Cobalt [7440-48-4] *	2.0	U	ug/L	1	2.0	10.0	10	EPA 6010B	01/23/08 15:17	VLO	
Copper [7440-50-8] *	0.60	U	ug/L	1	0.60	10.0	10	EPA 6010B	01/23/08 15:17	VLO	
Lead [7439-92-1] *	2.0	U	ug/L	1	2.0	10.0	10	EPA 6010B	01/23/08 15:17	VLO	
Nickel [7440-02-0] *	2.0	U	ug/L	1	2.0	10.0	50	EPA 6010B	01/23/08 15:17	VLO	
Selenium [7782-49-2] *	2.0	U	ug/L	1	2.0	10.0	10	EPA 6010B	01/23/08 15:17	VLO	
Silver [7440-22-4] *	2.0	U	ug/L	1	2.0	10.0	10	EPA 6010B	01/23/08 15:17	VLO	
Thallium [7440-28-0] *	0.036	U	ug/L	1	0.036	1.00	5.5	EPA 6020	01/17/08 11:18	JDH	
Vanadium [7440-62-2] *	**1.0**	J	ug/L	1	1.0	10.0	25	EPA 6010B	01/23/08 15:17	VLO	
Zinc [7440-66-6] *	**5.7**	J	ug/L	1	1.0	10.0	10	EPA 6010B	01/23/08 15:17	VLO	

This report relates only to the sample as received by the laboratory, and may only be reproduced in full.

QUALITY CONTROL

Volatile Organic Compounds by GCMS - Quality Control

Batch 8A16004 - EPA 5030B_MS

Blank (8A16004-BLK1) Prepared: 01/16/2008 08:26 Analyzed: 01/16/2008 12:04

Analyte	Result	Flag	MRL	Units	Spike Level	Source Result	%REC	%REC Limits	RPD	RPD Limit	Notes
Chloromethane	0.18	U	1.0	ug/L							
Vinyl chloride	0.15	U	1.0	ug/L							
Bromomethane	0.21	U	1.0	ug/L							
Chloroethane	0.40	U	1.0	ug/L							
Trichlorofluoromethane	0.16	U	1.0	ug/L							
1,1-Dichloroethene	0.14	U	1.0	ug/L							
Acetone	0.90	U	5.0	ug/L							
Iodomethane	0.23	U	2.0	ug/L							
Carbon disulfide	0.12	U	5.0	ug/L							
Methylene chloride	0.088	U	1.0	ug/L							
Acrylonitrile	2.0	U	5.0	ug/L							
trans-1,2-Dichloroethene	0.10	U	1.0	ug/L							
1,1-Dichloroethane	0.090	U	1.0	ug/L							
Vinyl acetate	0.19	U	2.0	ug/L							
2-Butanone	0.56	U	5.0	ug/L							
cis-1,2-Dichloroethene	0.14	U	1.0	ug/L							
Bromochloromethane	0.19	U	1.0	ug/L							
Chloroform	0.16	U	1.0	ug/L							
1,1,1-Trichloroethane	0.24	U	1.0	ug/L							
Carbon tetrachloride	0.38	U	1.0	ug/L							
1,2-Dichloroethane	0.36	U	1.0	ug/L							
Benzene	0.12	U	1.0	ug/L							
Trichloroethene	0.23	U	1.0	ug/L							
1,2-Dichloropropane	0.18	U	1.0	ug/L							
Dibromomethane	0.14	U	1.0	ug/L							
Bromodichloromethane	0.19	U	0.40	ug/L							
cis-1,3-Dichloropropene	0.16	U	0.20	ug/L							
4-Methyl-2-pentanone	0.36	U	5.0	ug/L							
Toluene	0.15	U	1.0	ug/L							
trans-1,3-Dichloropropene	0.18	U	0.20	ug/L							
1,1,2-Trichloroethane	0.24	U	1.0	ug/L							
Tetrachloroethene	0.25	U	1.0	ug/L							
2-Hexanone	0.24	U	5.0	ug/L							
Dibromochloromethane	0.18	U	1.0	ug/L							
1,2-Dibromoethane	0.19	U	1.0	ug/L							
Chlorobenzene	0.16	U	1.0	ug/L							
1,1,1,2-Tetrachloroethane	0.16	U	1.0	ug/L							
Ethylbenzene	0.17	U	1.0	ug/L							
Styrene	0.12	U	1.0	ug/L							
Bromoform	0.36	U	1.0	ug/L							
1,1,2,2-Tetrachloroethane	0.27	U	1.0	ug/L							
1,2,3-Trichloropropane	0.32	U	1.0	ug/L							
trans-1,4-Dichloro-2-butene	0.60	U	1.0	ug/L							
1,4-Dichlorobenzene	0.15	U	1.0	ug/L							
1,2-Dichlorobenzene	0.17	U	1.0	ug/L							
1,2-Dibromo-3-chloropropane	0.19	U	1.0	ug/L							
Xylenes (Total)	0.21	U	1.0	ug/L							
Surrogate: Dibromofluoromethane	*44*			*ug/L*	*50.0*		*88*	*61-120*			

QUALITY CONTROL

Volatile Organic Compounds by GCMS - Quality Control

Batch 8A16004 - EPA 5030B_MS

Blank (8A16004-BLK1) Continued Prepared: 01/16/2008 08:26 Analyzed: 01/16/2008 12:04

Analyte	Result	Flag	MRL	Units	Spike Level	Source Result	%REC	%REC Limits	RPD	RPD Limit	Notes
Surrogate: Toluene-d8	*41*			*ug/L*	*50.0*		*81*	*75-99*			
Surrogate: 4-Bromofluorobenzene	*45*			*ug/L*	*50.0*		*90*	*69-120*			

LCS (8A16004-BS1) Prepared: 01/16/2008 08:26 Analyzed: 01/16/2008 12:33

Analyte	Result	Flag	MRL	Units	Spike Level	Source Result	%REC	%REC Limits	RPD	RPD Limit	Notes
1,1-Dichloroethene	21		1.0	ug/L	20.0		107	71-121			
Benzene	22		1.0	ug/L	20.0		112	77-128			
Trichloroethene	18		1.0	ug/L	20.0		92	79-120			
Toluene	20		1.0	ug/L	20.0		98	77-120			
Chlorobenzene	19		1.0	ug/L	20.0		93	78-120			

Matrix Spike (8A16004-MS1) Prepared: 01/16/2008 08:26 Analyzed: 01/16/2008 13:03

Source: C717605-02

Analyte	Result	Flag	MRL	Units	Spike Level	Source Result	%REC	%REC Limits	RPD	RPD Limit	Notes
1,1-Dichloroethene	24		1.0	ug/L	20.0	0.14 U	121	71-121			
Benzene	24		1.0	ug/L	20.0	0.12 U	121	77-128			
Trichloroethene	20		1.0	ug/L	20.0	0.23 U	102	79-120			
Toluene	21		1.0	ug/L	20.0	0.15 U	107	77-120			
Chlorobenzene	20		1.0	ug/L	20.0	0.16 U	102	78-120			

Matrix Spike Dup (8A16004-MSD1) Prepared: 01/16/2008 08:26 Analyzed: 01/16/2008 13:32

Source: C717605-02

Analyte	Result	Flag	MRL	Units	Spike Level	Source Result	%REC	%REC Limits	RPD	RPD Limit	Notes
1,1-Dichloroethene	23		1.0	ug/L	20.0	0.14 U	116	71-121	4	27	
Benzene	23		1.0	ug/L	20.0	0.12 U	116	77-128	4	27	
Trichloroethene	20		1.0	ug/L	20.0	0.23 U	102	79-120	0	27	
Toluene	22		1.0	ug/L	20.0	0.15 U	108	77-120	1	23	
Chlorobenzene	20		1.0	ug/L	20.0	0.16 U	101	78-120	1	25	

Metals by EPA 6000/7000 Series Methods - Quality Control

Batch 8A16011 - EPA 3005A

Blank (8A16011-BLK1) Prepared: 01/16/2008 10:17 Analyzed: 01/23/2008 14:33

Analyte	Result	Flag	MRL	Units	Spike Level	Source Result	%REC	%REC Limits	RPD	RPD Limit	Notes
Arsenic	2.0	U	10.0	ug/L							
Barium	0.20	U	10.0	ug/L							
Beryllium	0.70	U	1.00	ug/L							
Cadmium	0.50	U	1.00	ug/L							
Chromium	2.0	U	10.0	ug/L							
Cobalt	2.0	U	10.0	ug/L							
Copper	0.60	U	10.0	ug/L							
Lead	2.0	U	10.0	ug/L							
Nickel	2.0	U	10.0	ug/L							

QUALITY CONTROL

Metals by EPA 6000/7000 Series Methods - Quality Control

Batch 8A16011 - EPA 3005A

Blank (8A16011-BLK1) Continued Prepared: 01/16/2008 10:17 Analyzed: 01/23/2008 14:33

Analyte	Result	Flag	MRL	Units	Spike Level	Source Result	%REC	%REC Limits	RPD	RPD Limit	Notes
Selenium	2.0	U	10.0	ug/L							
Silver	2.0	U	10.0	ug/L							
Vanadium	1.0	U	10.0	ug/L							
Zinc	1.0	U	10.0	ug/L							

LCS (8A16011-BS1) Prepared: 01/16/2008 10:17 Analyzed: 01/23/2008 14:40

Analyte	Result	Flag	MRL	Units	Spike Level	Source Result	%REC	%REC Limits	RPD	RPD Limit	Notes
Arsenic	523		10.0	ug/L	500		105	82-117			
Barium	538		10.0	ug/L	500		108	72-125			
Beryllium	259		1.00	ug/L	250		103	75-121			
Cadmium	264		1.00	ug/L	250		106	72-120			
Chromium	502		10.0	ug/L	500		100	78-119			
Cobalt	497		10.0	ug/L	500		99	76-117			
Copper	262		10.0	ug/L	250		105	80-117			
Lead	502		10.0	ug/L	500		100	72-121			
Nickel	521		10.0	ug/L	500		104	78-116			
Selenium	553		10.0	ug/L	500		111	82-127			
Silver	49.3		10.0	ug/L	50.0		99	80-128			
Vanadium	245		10.0	ug/L	250		98	78-117			
Zinc	499		10.0	ug/L	500		100	80-120			

Matrix Spike (8A16011-MS1) Prepared: 01/16/2008 10:17 Analyzed: 01/23/2008 14:54

Source: C717603-01

Analyte	Result	Flag	MRL	Units	Spike Level	Source Result	%REC	%REC Limits	RPD	RPD Limit	Notes
Arsenic	514		10.0	ug/L	500	2.0 U	103	64-126			
Barium	606		10.0	ug/L	500	81.3	105	74-119			
Beryllium	257		1.00	ug/L	250	0.70 U	103	70-131			
Cadmium	263		1.00	ug/L	250	0.50 U	105	68-121			
Chromium	542		10.0	ug/L	500	2.0 U	108	73-120			
Cobalt	489		10.0	ug/L	500	2.0 U	98	76-120			
Copper	255		10.0	ug/L	250	0.60 U	102	75-123			
Lead	492		10.0	ug/L	500	2.0 U	98	68-126			
Nickel	527		10.0	ug/L	500	2.0 U	105	64-126			
Selenium	542		10.0	ug/L	500	2.0 U	108	65-129			
Silver	49.4		10.0	ug/L	50.0	2.0 U	99	69-121			
Vanadium	247		10.0	ug/L	250	4.1	97	71-130			
Zinc	515		10.0	ug/L	500	8.7	101	63-131			

Matrix Spike Dup (8A16011-MSD1) Prepared: 01/16/2008 10:17 Analyzed: 01/23/2008 15:01

Source: C717603-01

Analyte	Result	Flag	MRL	Units	Spike Level	Source Result	%REC	%REC Limits	RPD	RPD Limit	Notes
Arsenic	520		10.0	ug/L	500	2.0 U	104	64-126	1	12	
Barium	623		10.0	ug/L	500	81.3	108	74-119	3	11	
Beryllium	259		1.00	ug/L	250	0.70 U	103	70-131	0.5	21	

QUALITY CONTROL

Metals by EPA 6000/7000 Series Methods - Quality Control

Batch 8A16011 - EPA 3005A

Matrix Spike Dup (8A16011-MSD1) Continued Prepared: 01/16/2008 10:17 Analyzed: 01/23/2008 15:01

Source: C717603-01

Analyte	Result	Flag	MRL	Units	Spike Level	Source Result	%REC	%REC Limits	RPD	RPD Limit	Notes
Cadmium	264		1.00	ug/L	250	0.50 U	106	68-121	0.3	12	
Chromium	501		10.0	ug/L	500	2.0 U	100	73-120	8	10	
Cobalt	494		10.0	ug/L	500	2.0 U	99	76-120	0.9	17	
Copper	261		10.0	ug/L	250	0.60 U	105	75-123	2	16	
Lead	498		10.0	ug/L	500	2.0 U	100	68-126	1	19	
Nickel	522		10.0	ug/L	500	2.0 U	104	64-126	1	12	
Selenium	551		10.0	ug/L	500	2.0 U	110	65-129	2	10	
Silver	48.7		10.0	ug/L	50.0	2.0 U	97	69-121	1	12	
Vanadium	250		10.0	ug/L	250	4.1	98	71-130	1	16	
Zinc	507		10.0	ug/L	500	8.7	100	63-131	2	24	

Batch 8A16012 - EPA 3005A

Blank (8A16012-BLK1) Prepared: 01/16/2008 10:23 Analyzed: 01/17/2008 11:02

Analyte	Result	Flag	MRL	Units	Spike Level	Source Result	%REC	%REC Limits	RPD	RPD Limit	Notes
Antimony	0.68	U	2.00	ug/L							
Thallium	0.036	U	1.00	ug/L							

LCS (8A16012-BS1) Prepared: 01/16/2008 10:23 Analyzed: 01/17/2008 11:04

Analyte	Result	Flag	MRL	Units	Spike Level	Source Result	%REC	%REC Limits	RPD	RPD Limit	Notes
Antimony	24.4		2.00	ug/L	25.0		97	85-115			
Thallium	24.8		1.00	ug/L	25.0		99	85-115			

Matrix Spike (8A16012-MS1) Prepared: 01/16/2008 10:23 Analyzed: 01/17/2008 11:10

Source: C717603-02

Analyte	Result	Flag	MRL	Units	Spike Level	Source Result	%REC	%REC Limits	RPD	RPD Limit	Notes
Antimony	24.7		2.00	ug/L	25.0	0.68 U	99	85-115			
Thallium	24.9		1.00	ug/L	25.0	0.056	99	85-115			

Matrix Spike Dup (8A16012-MSD1) Prepared: 01/16/2008 10:23 Analyzed: 01/17/2008 11:13

Source: C717603-02

Analyte	Result	Flag	MRL	Units	Spike Level	Source Result	%REC	%REC Limits	RPD	RPD Limit	Notes
Antimony	24.8		2.00	ug/L	25.0	0.68 U	99	85-115	0.5	20	
Thallium	25.1		1.00	ug/L	25.0	0.056	100	85-115	0.8	20	

FLAGS/NOTES AND DEFINITIONS

B	The analyte was detected in the associated method blank.
D	The sample was analyzed at dilution.
J	The reported value is between the laboratory method detection limit (MDL) and the laboratory method reporting limit (MRL), adjusted for actual sample preparation data and moisture content, where applicable.
U	The analyte was analyzed for but not detected to the level shown, adjusted for actual sample preparation data and moisture content, where applicable.
MRL	Method Reporting Limit. The MRL is roughly equivalent to the practical quantitation limit (PQL) and is based on the low point of the calibration curve, when applicable, sample preparation factor, dilution factor, and, in the case of soil samples, moisture content.

ENVIRONMENTAL CONSERVATION LABORATORIES CHAIN-OF-CUSTODY RECORD

10775 Central Port Dr.
Orlando, FL 32824
(407) 826-5314 Fax (407) 850-6945

4810 Executive Park Court, Suite 211
Jacksonville, FL 32216-6069
(904) 296-3007 Fax (904) 296-6210

1015 Passport Way
Cary, NC 27513
(919) 677-1669 Fax (919) 677-9846

Page 1 of 1

Client Name: Golder Associates, Inc. (GO007)	Project Number: 053-6620008.100
Address: The Wingate Building 4900 Koger Blvd., Suite 140	Project Name/Desc: Republic-East Carolina Landfill-SWs
City/ST/Zip: Greensboro, NC 27407	PO # / Billing Info:
Tel: (336) 852-4903 Fax: (336) 852-4904	Reporting Contact: Dusty Reedy
Sampler(s) Name, Affiliation (Print): K. Higgs / R. Stringfellow	Billing Contact: Rachel Kirkman
Sampler(s) Signature: Ryan Stringfellow	Facility # (if required):

Requested Analyses: 8260B Appendix 1; Ag,As,Ba,Be,Cd,Co,Cr,Cu,Ni,Pb,Sb,Se,Tl,V,Zn

Requested Turnaround Times: Note: Rush requests subject to acceptance by the facility. ✓ Standard ___ Expedited Due __/__/__

Lab Workorder: C717603

Preservation (See Codes) (Combine as necessary)

Item #	Sample ID (Field Identification)	Collection Date	Collection Time	Comp / Grab	Matrix (see codes)	Total # of Containers	8260B Appendix 1	Ag,As,Ba,Be,Cd,Co,Cr,Cu,Ni,Pb,Sb,Se,Tl,V,Zn	Sample Comments
	0803-SW1	01/15/08	12:24	G	Water	4	X	X	NC App I (metals & VOCs)
	0803-SW2	01/15/08	12:00	G	Water	4	X	X	
	0803-SW3				Water	4	X	X	→ DRY - No Sample
	0803-SW4	01/15/08	11:30	G	Water	4	X	X	NC App I (metals & VOCs)

<-- Total # of Containers

Sample Kit Prepared By	Date/Time	Relinquished By	Date/Time	Received By	Date/Time
DSW JWL	12/19/07	Ryan Stringfellow	01/15/08 16:45		
		Relinquished By	Date/Time	Received By	Date/Time
		Relinquished By	Date/Time	Received By: Robyn Bitz	Date/Time 1/15/08 17:20

Comments:
1. Please provide a "Level 2" data report.
2. Unit rates per "Basic Ordering Agreement for Laboratory Services" dated April 9, 2004 & 2006 ENCO MSA price list.
3. Need 7-10 day TAT with no surcharge.
4. Estimated Fee = $560.00 (June/July rates)

Cooler ID & Temp on Receipt: C-410 2.0°C

Condition Upon Receipt: ___ Acceptable ___ Unacceptable

Matrix: GW-Groundwater SO-Soil SE-Sediment SW-Surface Water WW-Wastewater A-Air O-Other (detail in comments)

Preservation: I-Ice H-HCl N-HNO3 S-H2SO4 NO-NaOH O-Other (detail in comments)

Note: All samples submitted to ENCO Labs are in accordance with the terms and conditions listed on the reverse of this form, unless prior written agreements exist.

LOA per Ryan Stringfellow: Ryan Stringfellow Approved By: Stephanie

WORK ORDER

Printed: 1/24/2008 1:24:22PM

C717603

ENCO Cary

Sample Receipt Conditions

Client:	**Golder Associates, Inc. (GO007)**	**Lab Project Mgr:**	**Stephanie Franz**
Project:	**Republic-East Carolina Landfill-SWs**	**Project Number:**	**053-6620008.100**
PO #:			

Report To:

Golder Associates, Inc. (GO007)
Dusty Reedy
The Wingate Building 4900 Koger Blvd., Suite 140
Greensboro, NC 27407
Phone: (336) 852-4903
Fax: (336) 852-4904

Invoice To:

Golder Associates, Inc. (GO007)
Rachel Kirkman
The Wingate Building 4900 Koger Blvd., Suite 140
Greensboro, NC 27407
Phone :(336) 852-4903
Fax: (336) 852-4904

Received By:	Robin C Bridges	Date Received:	15-Jan-08 17:20
Logged In By:	Robin C Bridges	Date Logged In:	15-Jan-08 19:35

Work Order Comments:

C-410 received at 2.0°C

Containers Intact	Y	Containers Properly Preserved	Y	Proper Containers Received	Y	All Samples in PreLog Received	N	COC/Labels Agree	Y
Custody Seals Intact	Y	Volatile Containers Preserved	Y	Volatile Containers Headspace Free	Y	Aqueous Samples Checked for Residual Cl	N	Received On Ice	Y

GOLDER ASSOCIATES NC, INC.
QUALITY ASSURANCE & QUALITY CONTROL
LABORATORY DATA REVIEW

Project Name: East Carolina Landfill-SW

Project Reference Number: 053-6620008.100

Sampling Event Date: January 15, 2008

Review Date: January 29, 2008 *Initials:*JD

Review Date: January 31, 2008 *Initials:*RS

Report #: C717603

Person(s) performing the review are to initial each item on this form as acknowledgement of data acceptance, or as acknowledgement of a review issue. In the case of the latter, a brief explanation should follow the applicable item.

Golder Associates Inc. has reviewed the laboratory certificates of analysis, chain-of-custody form, and laboratory provided sample group quality assurance and quality control data for the above referenced sample group to identify potential bias or inaccuracy, in general accordance with the following United States Environmental Protection Agency documents:

- Region III Modifications to Functional Guidelines for Organic Data Review Multi-Media, Multi-Concentration, September 1994;
- Region III Modifications to the Laboratory Data Validation Functional Guidelines for Evaluating Inorganic Analyses, April 1993; and
- Laboratory Data Validation Functional Guidelines for Evaluating Inorganic Analyses, July 1998.

COMPLIANCE ANALYTE LIST(S) (check all that apply)

___ NC Closed Facility List (.500 Rules)

___ NC C & D List (New Rules)

X NC Appendix I

___ NC Appendix I + Detects

___ NC Appendix II

___ NC Subtitle D Leachate List

Other: _____

1.0 CHAIN OF CUSTODY (COC) REVIEW

JD RS COC was properly signed by all parties.

JD RS Correct project name and number are on the form.

JD RS Sample receipt condition at laboratory was acceptable.

JD RS Each sample and blank submitted for analysis appears in the report.

Notes: *Surface water point SW-3 was dry during this event.*

2.0 SAMPLE HOLDING TIMES

JD RS Holding times for extraction and/or analysis were met for each analytical Method (see below for reference).

Notes: _____

Review Criteria		
Method	**Analytes**	**Holding Time**
SW-846 Method 8260 and 8011	VOCs	14 days
SW-846 Methods 8270, 8080, 8081, 8082, and 8151	SVOCs, PCBs, pesticides and herbicides	7 days for extraction, 40 days from extraction for analysis
SW-846 Methods 6000 and 7000 Series	Metals except mercury	6 months (no temperature requirements)
SW-846 Method 7470	Mercury	28 days
SW-846 Method 376.1	Sulfide	7 days
SW-846 Method 9010	Cyanide	14 days
EPA Method 300	Nitrate/Sulfate	48 hours/28 days
EPA Method 405.1	BOD	48 hours
EPA Method 410.4	COD	28 days
EPA Method 365.4	Phosphorous	28 days

3.0 LABORATORY QUALITY CONTROL REVIEW

JD RS Laboratory analyzed at least one internal blank for each method, where applicable.

JD RS Laboratory blank is interference-free.

JD RS Surrogate recoveries are provided for each analytical method, where applicable.

JD RS Surrogate recoveries for each method are within the acceptable limits (i.e., at least 50% of the surrogates were within range).

JD RS MS/MSD/LCS data results are provided for each analytical method.

JD RS MS/MSD/LCS recoveries for each method are within the acceptable limits (i.e., at least 1 of the 3 were within range).

Notes: _____

4.0 ANALYTE LISTS/METHODS

JD RS The proper number of constituents are present for each analyte list as identified above (including detects where applicable).

JD RS Proper EPA SW-846 analytical methods were used for analysis.

Notes: _____

5.0 DATA REPORTING

JD RS All analytical reporting associated with the event was performed by the contracted lab.

JD RS Trip, field and/or equipment, and laboratory blank results have all been reported. All detects for blanks are listed below by constituent. All laboratory method blanks, if any, have been 'flagged' with a 'B' where detected in other samples as appropriate and a laboratory narrative was provided. If the sample was flagged by the laboratory and is not within 5X of the concentration in the blank (or 10X for commonly detected laboratory contaminants-acetone, methylene chloride and phthalates), list below with explanation if flags should be removed. If flags need to be added for samples, also list below.

Field Blank:

- ***Barium and zinc were detected in the field blank in lab report C717605 at estimated concentrations of 0.30 µg/L (J) and 1.3 µg/L (J), respectively. A "B" flag is needed for the concentration of zinc in SW-4.***

JD RS It is clear from the laboratory report that samples have or have not been diluted during analysis, and if the samples have been diluted, the result is reported as a multiple of the dilution (e.g., a sample diluted 10x resulting in an analytical detection of 1.0 should be reported as 10). Those that have been diluted are listed below with the dilution factor.

JD RS The report provides the reporting limit for each constituent.

JD RS The results were reported at or below their proper reporting limits (i.e., MDLs with SWSLs reported). Those that are not reported correctly are listed below (by constituent) with the proper reporting limit listed beside them. State if the reporting limit error is due to dilutions.

JD RS No organic constituents were reported above their respective SWSLs, and no inorganic or organic constituents were reported above their respective NC 2L Drinking Water Standards/GPS in wells, or field/equipment/trip blanks, or above applicable surface water standards in surface water points.

- ***Vanadium detected above GPS in SW-1 at 4.1 µg/L(J) (GPS = 3.5 µg/L)***
- ***Zinc detected above SWSL in SW-2 at 13.6 µg/L (SWSL = 10 µg/L)***

JD RS No inorganic and organic constituents were detected in a well or surface water point at concentrations outside of their historical range (more than 5X previous concentrations or first-time detections).

- ***Thallium was detected for the first time at estimated concentrations in SW-1 and SW-2.***
- ***Arsenic was detected for the first time at an estimated concentration in SW-4.***

JD RS Other report issues/Communications with laboratory/etc.:

Notes: _____

APPENDIX III

STATISTICAL EVALUATION WORKSHEETS AND SUMMARY TABLE

Summary of Statistical Analysis
East Carolina Regional Landfill, Permit No. 08-03
Bertie County, North Carolina

January 2008 - Yorktown Formation														
Detected Monitoring Constituent/Analytes	**Reporting Units**	**Statistical Evaluation Method**		**Prediction Interval**	**GW-7**	**GW-8**	**GW-9**	**GW-10**	**GW-11**	**GW-13**	**GW-14**	**GW-15**	**GW-16R**
Barium	ug/L	Interwell	Nonparametric Prediction Interval	523	129	127	59.0 J	94.6 J	18.5 J	291	37.1 J	117	38.0 J
Beryllium	ug/L	Interwell	Poisson Prediction Interval	1.5	1.5	ND	ND	ND	ND	ND	ND	ND	ND
Cobalt	ug/L	Interwell	Nonparametric Prediction Interval	80	35.1	4.2 J	3.2 J	3.8 J	2.0 J	3.3 J	5.7 J	3.4 J	2.6 J
Zinc	ug/L	Interwell	Nonparametric Prediction Interval	110	5.7 B	4.1 B	6.0 B	2.9 B	5.2 B	4.8 B	5.9 B	3.7 B	13.6

Notes:
1. Shaded values represent apparent statistical significant increases (SSIs) over background concentrations.
2. Statistical worksheets are provided as Appendix III.
3. ug/L = micrograms per liter
4. J = estimated concentration below the Solid Waste Section Limit
5. B = analyte concentration within 5x blank concentration
6. NS = Not Sampled
7. ND = Not Detected
8. No SSIs were identified during the January 2008 sampling event.

Project Name: Republic - East Carolina LF
Project No: 053-6620008
Date: 1/29/08

Analyte: Barium

Sample No.	Sample Date	Location	Concentration (ug/L)	Quantitation Limit (ug/L)
1	10/28/98	GW-2	ND, QL = 500	500
2	04/07/99	GW-2	ND, QL = 500	500
3	12/08/99	GW-2	ND, QL = 500	500
4	04/27/00	GW-2	ND, QL = 500	500
5	10/18/00	GW-2	ND, QL = 500	500
6	04/19/01	GW-2	ND, QL = 500	500
7	12/24/01	GW-2	ND, QL = 500	500
8	04/23/02	GW-2	ND, QL = 500	500
9	10/23/02	GW-2	ND, QL = 500	500
10	04/01/03	GW-2	ND, QL = 500	500
11	10/28/03	GW-2	ND, QL = 500	500
12	04/27/04	GW-2	500	500
13	10/26/04	GW-2	ND, QL = 500	500
14	03/15/05	GW-2	500	500
15	07/12/05	GW-2	ND, QL = 500	500
16	01/19/06	GW-2	523	500
17	07/11/06	GW-2	517	500
18	01/17/07	GW-2	516	10
19	07/09/07	GW-2	448	10
20	01/14/08	GW-2	405	10

Number of Data	20
Number of Truncated Data	13
Percentage of Truncated Data	65%

Nonparametric Prediction Interval: **523**

Project Name: Republic - East Carolina LF
Project No: 053-6620008
Date: 1/29/08

Analyte: Beryllium

Sample No.	Sample Date	Location	Concentration (ug/L)		Quantitation Limit (ug/L)
1	10/28/98	GW-2	ND, QL = 2		2
2	04/07/99	GW-2	ND, QL = 2		2
3	12/08/99	GW-2	ND, QL = 2		2
4	04/27/00	GW-2	ND, QL = 2		2
5	10/18/00	GW-2	ND, QL = 2		2
6	04/19/01	GW-2	ND, QL = 2		2
7	12/24/01	GW-2	ND, QL = 2		2
8	04/23/02	GW-2	ND, QL = 2		2
9	10/23/02	GW-2	ND, QL = 2		2
10	04/01/03	GW-2	ND, QL = 2		2
11	10/28/03	GW-2	ND, QL = 2		2
12	04/27/04	GW-2	ND, QL = 2		2
13	10/26/04	GW-2	ND, QL = 2		2
14	03/15/05	GW-2	ND, QL = 2		2
15	07/12/05	GW-2	ND, QL = 2		2
16	01/19/06	GW-2	ND, QL = 2		2
17	07/11/06	GW-2	ND, QL = 2		2
18	01/17/07	GW-2	1.00		1
19	07/09/07	GW-2	0.70		1
20	01/14/08	GW-2	ND, QL = 1		1

Number of Data	20
Number of Truncated Data	18
Percentage of Truncated Data	90%

Poisson Prediction Interval: 1.5 ug/L

Project Name: Republic - East Carolina LF
Project No: 053-6620008
Date: 1/29/08

Upper Poisson Prediction Limit

Analyte: Beryllium

Background Data

Sample No.	Sample Date	Location	Concentration (ug/l)	Quantitation Limit (ug/l)	1/2 Quantitation Limit (ug/l)	1x Discrete Values Conversion
1	10/28/98	GW-2	ND, QL = 2	2	1	10
2	04/07/99	GW-2	ND, QL = 2	2	1	10
3	12/08/99	GW-2	ND, QL = 2	2	1	10
4	04/27/00	GW-2	ND, QL = 2	2	1	10
5	10/18/00	GW-2	ND, QL = 2	2	1	10
6	04/19/01	GW-2	ND, QL = 2	2	1	10
7	12/24/01	GW-2	ND, QL = 2	2	1	10
8	04/23/02	GW-2	ND, QL = 2	2	1	10
9	10/23/02	GW-2	ND, QL = 2	2	1	10
10	04/01/03	GW-2	ND, QL = 2	2	1	10
11	10/28/03	GW-2	ND, QL = 2	2	1	10
12	04/27/04	GW-2	ND, QL = 2	2	1	10
13	10/26/04	GW-2	ND, QL = 2	2	1	10
14	03/15/05	GW-2	ND, QL = 2	2	1	10
15	07/12/05	GW-2	ND, QL = 2	2	1	10
16	01/19/06	GW-2	ND, QL = 2	2	1	10
17	07/11/06	GW-2	ND, QL = 2	2	1	10
18	01/17/07	GW-2	1	1	0.5	5
19	07/09/07	GW-2	0.7	1	0.5	5
20	01/14/08	GW-2	ND, QL = 1	1	0.5	5

Possion Discrete Distribution Adjustment Factor = 10

Note: All sample concentrations are micrograms per liter

Using the background data, the upper Poisson Prediction Limit, y*, is determined by:

$$y^* = c\,y + [(t^2)\,c / 2] + t\,c\,[y\,(1 + (1/c)) + ((t^2) / 4)]^{0.5}$$

where:

c = k / n
y = Poisson count
t = t(n-1, 0.95), Student's t-distribution
n-1 = degrees of freedom (number of samples - 1)
k = number of downgradient samples per event (1)
.95 = confidence interval
n = number of background samples

For:

c = 0.050
y = 185.00
t = 1.729
n = 20

y* = 14.7
Adjusted y* = 1.5

Project Name: Republic - East Carolina LF
Project No: 053-6620008
Date: 1/29/08

Analyte: Cobalt

Sample No.	Sample Date	Location	Concentration (ug/L)		Quantitation Limit (ug/L)
1	09/03/93	GW-2	80		10
2	09/10/93	GW-2	70		10
3	09/16/93	GW-2	ND, QL = 10		10
4	09/22/93	GW-2	ND, QL = 10		10
5	10/04/93	GW-2	ND, QL = 10		10
6	01/20/94	GW-2	40		10
7	07/28/94	GW-2	30		10
8	01/26/95	GW-2	10		10
9	07/26/95	GW-2	10		10
10	01/24/96	GW-2	ND, QL = 10		10
11	10/10/96	GW-2	ND, QL = 10		10
12	04/16/97	GW-2	ND, QL = 10		10
13	10/23/97	GW-2	60		10
14	04/28/98	GW-2	10		10
15	10/28/98	GW-2	ND, QL = 10		10
16	04/07/99	GW-2	ND, QL = 10		10
17	12/08/99	GW-2	10		10
18	04/27/00	GW-2	ND, QL = 10		10
19	10/18/00	GW-2	ND, QL = 10		10
20	04/19/01	GW-2	ND, QL = 10		10
21	12/24/01	GW-2	ND, QL = 10		10
22	04/23/02	GW-2	ND, QL = 10		10
23	10/23/02	GW-2	ND, QL = 10		10
24	04/01/03	GW-2	10		10
25	10/28/03	GW-2	ND, QL = 10		10
26	04/27/04	GW-2	ND, QL = 10		10
27	10/26/04	GW-2	ND, QL = 10		10
28	03/15/05	GW-2	10		10
29	07/12/05	GW-2	ND, QL = 10		10
30	01/19/06	GW-2	11.9		10
31	07/11/06	GW-2	12.5		10
32	01/17/07	GW-2	10.3		10
33	07/09/07	GW-2	10.0		10
34	01/14/08	GW-2	11.3		10

Number of Data	34
Number of Truncated Data	18
Percentage of Truncated Data	53%

Nonparametric Prediction Interval: **80**

Project Name: Republic - East Carolina LF
Project No: 053-6620008
Date: 1/29/08

Analyte: Zinc

Sample No.	Sample Date	Location	Concentration (ug/L)		Quantitation Limit (ug/L)
1	10/28/1998	GW-2	ND, QL = 50		50
2	4/7/1999	GW-2	50		50
3	12/8/1999	GW-2	ND, QL = 50		50
4	4/27/2000	GW-2	90		50
5	10/18/2000	GW-2	ND, QL = 50		50
6	4/19/2001	GW-2	ND, QL = 50		50
7	12/24/2001	GW-2	ND, QL = 50		50
8	4/23/2002	GW-2	ND, QL = 50		50
9	10/23/2002	GW-2	ND, QL = 50		50
10	4/1/2003	GW-2	110		50
11	10/28/2003	GW-2	ND, QL = 50		50
12	4/27/2004	GW-2	ND, QL = 50		50
13	10/26/2004	GW-2	ND, QL = 50		50
14	3/15/2005	GW-2	ND, QL = 50		50
15	7/12/2005	GW-2	ND, QL = 50		50
16	1/19/2006	GW-2	ND, QL = 50		50
17	7/11/2006	GW-2	ND, QL = 50		50
~~18~~	~~1/17/2007~~	~~GW-2~~	~~18.8 B~~	~~B~~	~~10~~
19	7/9/2007	GW-2	8.3	J	10
20	1/14/2008	GW-2	13.3		10

Number of Data	19
Number of Truncated Data	14
Percentage of Truncated Data	74%

Nonparametric Prediction Interval: **110**