Final

Phase I Remedial Investigation Report
Towers Road Disposal Areas

Harvey Point Defense Testing Activity
Hertford, North Carolina

Contract Task Order 017

March 2014

Prepared for

Department of the Navy
Naval Facilities Engineering Command
Mid-Atlantic

Under the

NAVFAC CLEAN 8012 Program
Contract N62470-11-D-8012

Prepared by

CH2MHILL

Virginia Beach, Virginia
NC Engineering License #F-0699

NORTH CAROLINA PROFESSIONAL SEAL 039686 ENGINEER NATHANIEL A. PRICE
3/24/2014

CH2M HILL
5701 Cleveland Street
Suite 200
Virginia Beach, VA 23462
Tel 757.518.9666
Fax 757.497.6885

March 24, 2014

458608.RP.FR.01

Mr. Matt Aufman
Inactive Hazardous Sites Branch – REC Program
NCDENR – Division of Waste Management
217 West Jones St.
Raleigh, North Carolina 27603

Subject: *Final Phase I Remedial Investigation Report, Towers Road Disposal Areas*
Harvey Point Defense Testing Activity, Hertford, North Carolina
IHSB Site Name: Towers Road Disposal Area
IHSB Site ID No.: NONCD0002893

Dear Mr. Aufman:

On behalf of Harvey Point Defense Testing Activity, CH2M HILL is pleased to submit a CD containing the Phase I Remedial Investigation Report. If you have any questions or comments regarding the referenced document, please do not hesitate to contact me at (757) 671-6231.
Sincerely,

CH2M HILL

Kim Henderson
Registered Site Manager

cc: Ms. Dawn Hayes/NAVFAC (1 CD)
Mr. Brian Murphy/HPDTA (1 CD)
Ms. Janna Staszak/CH2M HILL (cover letter only)

REC PROGRAM DOCUMENT CERTIFICATION FORM - PAGE 1 OF 2

IHSB SITE NAME TOWERS ROAD DISPOSAL AREAS

DATE & NAME OF DOCUMENT FINAL PHASE I REMEDIAL INVESTIGATION REPORT / MARCH 2014

TYPE OF SUBMITTAL (circle all that apply): Report, Work plan, Work Phase Comp. Statement, Schedule Change

REMEDIATING PARTY DOCUMENT CERTIFICATION STATEMENT (.0306(B)(2))

"I certify under penalty of law that I have personally examined and am familiar with the information contained in this submittal, including any and all documents accompanying this certification, and that, based on my inquiry of those individuals immediately responsible for obtaining the information, the material and information contained herein is, to the best of my knowledge and belief, true, accurate and complete. I am aware that there are significant penalties for willfully submitting false, inaccurate or incomplete information."

Erik Freestone, D/Admin HPDTA
Name of Remediating Party

Signature of Remediating Party

21 MARCH 2014
Date

NOTARIZATION

NORTH CAROLINA (Enter State)

PERQUIMANS **COUNTY**

I, DEBORAH LYMAN, a Notary Public of said County and State, do hereby certify that ERIK FREESTONE did personally appear and sign before me this day, produced proper identification in the form of DRIVERS LICENSE, was duly sworn or affirmed, and declared that, to the best of his or her knowledge and belief, after thorough investigation, the information contained in the above certification is true and accurate, and he or she then signed this Certification in my presence.

WITNESS my hand and official seal this 21 day of March, 2014.

Deborah O. Lyman
Notary Public (signature)

My commission expires: 21 July 2015

(OFFICIAL SEAL)

DEBORAH O LYMAN NOTARY PUBLIC MY COMMISSION EXPIRES 21 July 2015 PERQUIMANS COUNTY, N.C.

REC PROGRAM DOCUMENT CERTIFICATION FORM - PAGE 2 OF 2
IHSB SITE NAME TOWERS ROAD DISPOSAL AREA
DATE & NAME OF DOCUMENT FINAL PHASE I REMEDIAL INVESTIGATION REPORT / MARCH 2014
TYPE OF SUBMITTAL (circle all that apply): Report, Work plan, Work Phase Comp. Statement, Schedule Change

REGISTERED SITE MANAGER CERTIFICATION OF SIGNATURES

As the Registered Environmental Consultant for the Site for which this filing is made, I certify that the signatures included herewith are genuine and authentic original handwritten signatures and/or true, accurate, and complete copies of the genuine and authentic original handwritten signatures of the persons who purport to sign for this filing. I further certify that I have collected through reliable means the originals and/or copies of said signatures from the persons authorized to sign for this filing who, in fact, signed the originals thereof. Those persons and I understand and agree that any copies of signatures have the same legally binding effect as original handwritten signatures, and I certify that any person for whom I am submitting a copy of their signature has provided me with their express consent to submit said copy. Additionally, I certify that I am authorized to attest to the genuineness and authenticity of the signatures, both originals and any copies, being submitted herewith and that by signing below, I do in fact attest to the genuineness and authenticity of all the signatures, both originals and copies, being submitted for this filing.

KIM HENDERSON
Name of Registered Site Manager

Signature of Registered Site Manager — Date: 3/24/14

REGISTERED SITE MANAGER DOCUMENT CERTIFICATION STATEMENT (.0306(b)(1))

"I certify under penalty of law that I am personally familiar with the information contained in this submittal, including any and all supporting documents accompanying this certification, and that the material and information contained herein is, to the best of my knowledge and belief, true, accurate and complete and complies with the Inactive Hazardous Sites Response Act N.C.G.S. 130A-310, et seq, and the remedial action program Rules 15A NCAC 13C .0300. I am aware that there are significant penalties for willfully submitting false, inaccurate or incomplete information."

KIM HENDERSON
Name of Registered Site Manager

Signature of Registered Site Manager — Date: 3/24/14

NOTARIZATION

VIRGINIA (Enter State)

VIRGINIA BEACH **COUNTY**

I, REBECCA SINGLETON, a Notary Public of said County and State, do hereby certify that KIM HENDERSON did personally appear and sign before me this day, produced proper identification in the form of DRIVERS LICENSE, was duly sworn or affirmed, and declared that, he or she is the duly authorized environmental consultant of the remediating party of the property referenced above and that, to the best of his or her knowledge and belief, after thorough investigation, the information contained in the above certifications is true and accurate, and he or she then signed these Certifications in my presence.

WITNESS my hand and official seal this 24th day of March, 2014

Notary Public (signature)

(OFFICIAL SEAL)

REBECCA S SINGLETON NOTARY PUBLIC MY COMMISSION NUMBER 180890 COMMONWEALTH OF VIRGINIA

My commission expires: 12/31/16

Document Certification Form No. DC - II
(Revised 8/11)

PHASE I REMEDIAL INVESTIGATION COMPLETION CERTIFICATION
15A NCAC 13C.0306(b)(5)(A)

Media (check all that apply): ☐ All Media ☑ Soil ☑ Ground water ☐ Surface water ☐ Sediment

REC is in compliance with both 15A NCAC 13C .0305(b)(2) and .0305(b)(3): [check] ☑

Site Name: TOWERS ROAD DISPOSAL AREAS
County: PERQUIMANS
Site ID No.: NONCD0002893

Street Address: 2835 HARVEY POINT ROAD
HERTFORD, NC 27944

The Phase I remedial investigation, which is the subject of this certification has, to the best of my knowledge, been completed in compliance with the Inactive Hazardous Sites Response Act N.C.G.S. 130A-310, et seq. and the remedial action program Rules 15A NCAC 13C .0300. I am aware that there are significant penalties for willfully submitting false, inaccurate or incomplete information.

RSM Signature: [signature]
Date: 3/24/14

RSM Name: KIM HENDERSON
REC Name: CH2M HILL, INC. / CHRISTOPHER BOZZINI
REC No.: 00006

Mailing Address: 11301 Carmel Commons Boulevard, Suite 304
City, State, ZIP: Charlotte, NC 28226

NOTARIZATION

VIRGINIA (Enter State)

VIRGINIA BEACH **COUNTY**

I, REBECCA SINGLETON, a Notary Public of said County and State, do hereby certify that KIM HENDERSON did personally appear and sign before me this day, produced proper identification in the form of DRIVERS LICENSE, was duly sworn or affirmed, and declared that, he or she is the duly authorized environmental consultant of the remediating party of the property referenced above and that, to the best of his or her knowledge and belief, after thorough investigation, the information contained in the above certification is true and accurate, and he or she then signed this Certification in my presence.

WITNESS my hand and official seal this 24th day of March, 2014.

[signature]
Notary Public (signature)

(OFFICIAL SEAL)

REBECCA S SINGLETON NOTARY PUBLIC MY COMMISSION NUMBER 180890 COMMONWEALTH OF VIRGINIA

My commission expires: 12/31/16

Work Phase Completion Form No. WPC – I
(Revised 12/13)

Executive Summary

This report summarizes the Phase I Remedial Investigation (RI) conducted at the Towers Road Disposal Areas located at Harvey Point Defense Testing Activity (HPDTA) in Hertford, North Carolina. The Phase I RI was performed under Department of the Navy (Navy) Multimedia Contract Number N62470-10-D-3009, Contract Task Order 20. This Phase I RI report was prepared under Naval Facilities Engineering Command (NAVFAC) Mid-Atlantic Contract Number N62470-11-D-8012, Contract Task Order 17, for submittal to NAVFAC Atlantic and HPDTA.

According to Base personnel, trash disposal occurred at two locations, the 2nd Street Disposal Area and 5th Street Disposal Area prior to the 1980s. The two sites combined are referred to as the "Towers Road Disposal Areas." Combined, the disposal areas were estimated to extend over 2 acres and to a depth of up to 16 feet below ground surface (bgs). Disposal practices reportedly included digging pits and burying waste, pouring diesel on waste and burning it, and possible chemical dumping. The contents of the waste disposal areas are not fully documented but are reported by the facility to include paper, utensils, computer disks, broken dishes, glass, and ordnance items (not to include ammunition) and drums at the 2nd Street Disposal Area; and safes, metal cars, and polychlorinated biphenyls (PCBs) at the 5th Street Disposal Area. Based on known site history, no munitions and explosives of concern or radiological components were disposed of at the 2nd Street Disposal Area and 5th Street Disposal Area.

The 2nd Street Disposal Area was unearthed by HPDTA on September 20, 2011. The 5th Street Disposal Area was subsequently identified as an area of concern due to employee interviews. A notification package was submitted to the North Carolina Department of Environment and Natural Resources (NCDENR) Division of Waste Management Inactive Hazardous Sites Branch (IHSB) on November 28, 2011, within 90 days of discovery. Geophysical surveys were conducted at each area in November 2011 to evaluate the distribution of buried material. Following NCDENR notification of the existence of the disposal areas, soil and groundwater sampling were conducted in January 2012 as a requirement for entry into the North Carolina Registered Environmental Consultant (REC) program. The Towers Road Disposal Areas was established as Site identification Number NONCD0002893 under the North Carolina Division of Waste Management IHSB. An Administrative Agreement for REC-directed voluntary assessment and remedial action was signed in April 2013.

This report presents the results of the investigations, identifies the preliminary remediation goals and constituents of potential concern (COPCs), refines the conceptual site model (CSM), and presents recommendations for follow-on activities. Based on the presence of waste at the Towers Road Disposal Areas and the strategy to expedite the remediation process, an interim remedial action to remove the waste is planned in conjunction with the Phase II RI; therefore, calculation of adjusted health-based soil remediation goals is included in this report to support anticipated soil confirmation sampling.

The Phase I RI was conducted to identify waste disposal areas, characterize the chemical nature of releases/disposal activities, and to collect sufficient data to establish preliminary remediation goals. The Phase I RI activities consisted of a civil survey of existing site conditions, geophysical surveys, test pitting, surface and subsurface soil sampling, groundwater monitoring well installation, groundwater sampling, and management and disposal of investigation-derived waste (IDW).

Based on the results of the geophysical survey and test pitting activities, the extent of waste at the 2nd Street Disposal Area covers approximately 0.7 acre north of Flat Run Road. Debris consisted of both metallic and non-metallic materials including, but not limited to, metal pipes, scrap metal, bottles, brick, and logs. The highest concentrations of constituents in soil were generally detected in samples collected within the extent of waste identified during the geophysical surveys and included semivolatile organic compounds (SVOCs), PCBs, and metals in soil and volatile organic compounds (VOCs) and metals in

groundwater. The primary fate and transport mechanisms consist of the potential for leaching of constituents from buried wastes in soils and infiltration through the vadose zone to groundwater and dissolved constituent migration downgradient with groundwater flow (advection).

Based on the results of the geophysical survey and test pitting activities, the extent of waste at the 5th Street Disposal Area covers approximately 0.6 acre north of Flat Run Road. Debris consisted of both metallic and non-metallic materials including, but not limited to, metal pipes, scrap metal, bottles, brick, and logs. The highest concentrations of constituents in soil and groundwater were generally detected in samples collected within the extent of waste identified during the geophysical surveys and included SVOCs, PCBs, and metals in soil and VOCs and metals in groundwater. The fate and transport mechanisms consist of; potential for leaching of metals from buried wastes in soils and infiltration through the vadose zone to groundwater and infiltration of precipitation containing suspended or dissolved metals from soil to groundwater. Based on information from the facility, the concrete pad on the north side of the 5th Street Disposal Area was used to test typical breaching activities. Breaching activities are typically the act of breaking down a door or entrance that has been locked or blocked in some manner. Mock ups of the items to be breached were constructed and then various explosive charges were used to see how the mock ups functioned/performed. The mock up materials were discarded and others mock up materials brought in to replace them for more testing. The typical explosives used for the detonations include Composition 4 Explosive (C4).

In consideration of the current and reasonably anticipated future land use, adult visitors are the only expected human receptors for the 2nd Street Disposal Area and 5th Street Disposal Area. However, to be conservative, unlimited use and unrestricted exposure was evaluated and exposure to waste and constituents in soil and groundwater have been identified as potential concerns. There are currently no buildings on or within 100 feet of the 2nd Street Disposal Area and 5th Street Disposal Area; therefore, vapor intrusion is not a currently complete exposure pathway and an evaluation of subsurface vapor intrusion is not required by the REC Program Implementation Guidance. Due to the lack of sensitive environmental areas and the fact that site drainage is not anticipated to enter the nearby wetlands there are no ecological receptors of concern at the 2nd Street Disposal Area and 5th Street Disposal Area and an ecological risk assessment is not warranted.

Based on the results of the Phase I RI, a Phase II RI for soil and groundwater and interim remedial action to address waste and soil are recommended. Recommendations for the Phase II RI include collection of soil and groundwater background samples for polycyclic aromatic hydrocarbons (PAHs) analysis, the installation of additional monitoring wells, and collection of additional groundwater, surface soil, and subsurface soil samples to further delineate the horizontal and vertical extent of contamination as well as further characterize the site conditions in order to conduct a feasibility study of remedial alternatives to support a proposed remedy, if needed. Recommendations also include the removal of the area south of Flat Run Road at the 2nd Street Disposal Area and the inclusion of explosives residues analysis at the 5th Street Disposal Area during the Phase II RI and collection of semi-annual groundwater elevation data through the remainder of the RI phase. Recommendations for the interim remedial action are to characterize, remove, and dispose off site of waste and associated soil to prevent contaminant migration.

Contents

Executive Summary ..... **v**

1 Introduction **1-1**
1.1 Site Background 1-1
1.2 Objectives 1-2

2 Field Investigation Activities **2-1**
2.1 Site Preparation 2-1
2.2 Geophysical Survey 2-1
2.3 Test Pitting 2-2
2.4 Soil Sampling 2-2
2.4.1 Surface Soil Sampling 2-3
2.4.2 Subsurface Soil Sampling 2-3
2.5 Monitoring Well Installation 2-4
2.6 Groundwater Sampling 2-6
2.7 Investigation-Derived Waste (IDW) Management 2-7
2.8 Deviations from the Work Plan 2-7
2.9 Quality Assurance and Quality Control 2-8

3 Investigation Results **3-1**
3.1 Geophysical Survey Results 3-1
3.1.1 2nd Street Disposal Area Results 3-1
3.1.2 5th Street Disposal Area Results 3-1
3.2 Test Pitting Results 3-2
3.2.1 2nd Street Disposal Area 3-2
3.2.2 5th Street Disposal Area 3-2
3.3 Soil Analytical Results 3-2
3.3.1 Background 3-2
3.3.2 Surface Soil 3-3
3.3.3 Subsurface Soil 3-4
3.4 Groundwater Analytical Results 3-5
3.4.1 Background Data 3-5
3.4.2 2nd Street Disposal Area 3-5
3.4.3 5th Street Disposal Area 3-6

4 Conceptual Site Model **4-1**
4.1 2nd Street Disposal Area 4-1
4.2 5th Street Disposal Area 4-3

5 Adjusted Soil Remediation Goals **5-1**
5.1 Health-based Soil Remediation Goals 5-1
5.2 Protection of Groundwater Soil Remediation Goals 5-2

6 Conclusions and Recommendations **6-1**
6.1 Conclusions 6-1
6.2 Recommendations 6-2

7 References **7-1**

Attachments

A Site Photographs
B Geophysical Survey Report
C Well Completion Diagrams and Soil Boring Logs
D Laboratory Reports
E Raw Analytical Data
F Tentatively Identified Compounds Raw Analytical Data
G Test Pit Logs

Tables

1 Crosswalk to Required Information
2 Monitoring Well Construction Details
3 Summary of Water Level Measurements
4 Background Soil Results
5 Surface Soil Results and Exceedances – 2nd Street Disposal Area
6 Surface Soil COPCs – 2nd Street Disposal Area
7 Summary of COPCs – 2nd Street Disposal Area
8 Surface Soil Results and Exceedances – 5th Street Disposal Area
9 Surface Soil COPCs – 5th Street Disposal Area
10 Summary of COPCs – 5th Street Disposal Area
11 Subsurface Soil Results and Exceedances – 2nd Street Disposal Area
12 Subsurface Soil COPCs – 2nd Street Disposal Area
13 Subsurface Soil Results and Exceedances – 5th Street Disposal Area
14 Subsurface Soil COPCs – 5th Street Disposal Area
15 Background Groundwater Results
16 Groundwater Results and Exceedances – 2nd Street Disposal Area
17 Groundwater COPCs – 2nd Street Disposal Area
18 Groundwater Results and Exceedances – 5th Street Disposal Area
19 Groundwater COPCs – 5th Street Disposal Area
20 Adjusted Soil Remediation Goals – 2nd Street Disposal Area Surface Soil
21 Adjusted Soil Remediation Goals – 2nd Street Disposal Area Subsurface Soil
20 Adjusted Soil Remediation Goals – 5th Street Disposal Area Surface Soil
21 Adjusted Soil Remediation Goals – 5th Street Disposal Area Subsurface Soil
24 Preliminary Remediation Goals – 2nd Street Disposal Area
25 Preliminary Remediation Goals – 5th Street Disposal Area

Figures

1 HPDTA Location
2 Site Location
3 REC Program Timeline
4 Sample, Test Pit and Geophysical Survey Locations
5 Groundwater Contour Map
6 2nd Street Disposal Area Test Pit Results
7 5th Street Disposal Area Test Pit Results
8 Surface Soil Analytical Results – Exceedances Only
9 Subsurface Soil Analytical Results – Exceedances Only
10 Groundwater Analytical Results – Exceedances Only
11 Monitoring and Water Supply Well Locations
12 Location of Geological Cross Sections
13 Geological Cross Sections

Acronyms and Abbreviations

ASTM	American Society for Testing and Materials
bgs	below ground surface
C4	Composition 4 Explosive
CA	corrective action
COPC	constituent of potential concern
CSM	conceptual site model
DO	dissolved oxygen
DPT	direct-push technology
EM31	Geonics, Ltd., EM31-MK2
ERB	equipment rinsate blank
ESCP	Erosion and Sediment Control Plan
GC	gas chromatography
GPS	global positioning system
HPDTA	Harvey Point Defense Testing Activity
HPLC	high-performance liquid chromatography
HSA	hollow-stem auger
ICS	interference check sample
IDW	investigation-derived waste
IHSB	Inactive Hazardous Sites Branch
IS	internal standard
LCS	laboratory control spike sample
mg/L	milligram per liter
mV	millivolt
NAEVA	NAEVA Geophysics
NAVFAC	Naval Facilities Engineering Command
Navy	Department of the Navy
NC GW-IMAC	North Carolina Groundwater-Interim Maximum Allowable Concentrations
NC2LGW	North Carolina Groundwater Quality Standards
NCDENR	North Carolina Department of Environment and Natural Resources
ORP	oxidation-reduction potential
PAH	polycyclic aromatic hydrocarbon
PCB	polychlorinated biphenyl
PID	photoionization detector
PSRG	preliminary soil remediation goal
PVC	polyvinyl chloride
QA	quality assurance
QAPP	Quality Assurance Project Plan
QC	quality control
QCP	Quality Control Plan
REC	Registered Environmental Consultant
RI	Remedial Investigation

RL	reporting limit
SOP	standard operating procedure
SRG	soil remediation goal
SVOC	semivolatile organic compound
TIC	tentatively identified compound
TOC	total organic carbon
USEPA	United States Environmental Protection Agency
VOC	volatile organic compound

SECTION 1

Introduction

This report summarizes the Phase I Remedial Investigation (RI) that was conducted at the Towers Road Disposal Areas, Harvey Point Defense Testing Activity (HPDTA), Hertford, North Carolina (**Figure 1**). The Towers Road Disposal Areas consists of the 2nd Street Disposal Area and 5th Street Disposal Area (**Figure 2**). The Phase I RI was performed under Department of the Navy (Navy) Multimedia Contract Number N62470-10-D-3009, Contract Task Order 20. Field activities were initiated on May 20, 2013, and completed on June 21, 2013. The investigation was conducted in accordance with the following documents:

- *Remedial Investigation Work Plan, Towers Road Disposal Areas* (CH2M HILL, 2013a), herein referred to as the Phase I RI work plan
- *Remedial Investigation Work Plan Addendum, Towers Road Disposal Areas* (CH2M HILL, 2013b), herein referred to as the Phase I RI work plan addendum

This Phase I RI report was prepared for Naval Facilities Engineering Command (NAVFAC) Atlantic under Contract Number N62470-11-D-8012, Contract Task Order 17, for submittal to NAVFAC Atlantic and HPDTA.

1.1 Site Background

The 2nd Street Disposal Area was unearthed by HPDTA on September 20, 2011. The 5th Street Disposal Area was subsequently identified as an area of concern due to employee interviews. According to base personnel, trash disposal occurred at two locations, the 2nd Street Disposal Area and 5th Street Disposal Area, prior to the 1980s. The two sites combined are referred to as the "Towers Road Disposal Areas." Combined, the disposal areas were estimated to extend over 2 acres and to a depth of up to 16 feet below ground surface (bgs). Disposal practices reportedly included digging pits and burying waste, pouring diesel on waste and burning it, and possible chemical dumping. The contents of the waste disposal areas are not fully documented but are reported by the facility to include paper, utensils, computer disks, broken dishes, glass, and ordnance items (not to include ammunition) and drums at the 2nd Street Disposal Area; and safes, metal cars, and polychlorinated biphenyls (PCBs) at the 5th Street Disposal Area. A PCB removal action was conducted in 1996 at the 5th Street Disposal Area to dispose of 2,544 tons of PCB-contaminated soil (OHM, 1997). Based on known site history, no munitions and explosives of concern or radiological components were disposed of at the 2nd Street Disposal Area and 5th Street Disposal Area. Information from the facility indicates the concrete pad on the north side of the 5th Street Disposal Area was used to test typical breaching activities. Breaching activities are typically the act of breaking down a door or entrance that has been locked or blocked in some manner. Mock ups of the items to be breached were constructed and then various explosive charges were used to see how the mock ups functioned/performed. The mock up materials were discarded and others brought in to replace them for more testing. The typical explosives used for the detonations include Composition 4 Explosive (C4).

A notification package was submitted to the North Carolina Department of Environment and Natural Resources (NCDENR) Division of Solid Waste Management Inactive Hazardous Sites Branch (IHSB) on November 28, 2011, within 90 days of discovery. The following activities were conducted to support the determination of whether or not entry into the North Carolina Registered Environmental Consultant (REC) program was appropriate.

2nd Street Disposal Area

- Geophysical Survey (2011): Conducted to determine the extent of buried debris in cleared areas. The results of the geophysical survey show areas of elevated electromagnetic response in the central portion of the site.
- Soil and Groundwater Sampling (2012): Collected four samples for volatile organic compounds (VOCs) and metals analysis to evaluate potential releases. The samples were collected from direct-push technology (DPT) borings at a depth of 8 to 12 feet bgs. Vinyl chloride and several metals were detected in groundwater at concentrations exceeding regulatory standards. Several metals were also detected in soil at concentrations exceeding REC program preliminary soil remediation goals (PSRGs).

5th Street Disposal Area

- Geophysical Survey (2011): Conducted to determine the extent of buried debris in cleared areas. The results of the geophysical survey show areas of elevated electromagnetic response in the northern portion of the site.
- Soil and Groundwater Sampling (2012): Collected four samples for VOCs and metals analysis to evaluate potential releases. The samples were collected from DPT borings at a depth of 8 to 12 feet bgs. Vinyl chloride and several metals were detected in groundwater at concentrations exceeding regulatory standards. Several metals were also detected in soil at concentrations exceeding REC program PSRGs.

The analytical data and reports for the previous investigations can be found in the Phase I RI work plan. There are no records of federal, state, or local environmental permits being issued to HPDTA for the 2nd Street Disposal Area or 5th Street Disposal Area. With the exception of the reported trash and PCB disposal, there are no records of potentially hazardous waste being stored, disposed, spilled, used, generated, treated, or managed at the two areas.

The Towers Road Disposal Areas was established as Site Identification Number NONCD0002893 under the North Carolina Division of Waste Management IHSB. An Administrative Agreement for REC-directed voluntary assessment and remedial action was signed in April 2013. The Administrative Agreement specifies that HPDTA (the remediating party) is responsible for the assessment and remediation of the areas contaminated through previous disposal practices. HPDTA selected CH2M HILL as the REC for the Towers Road Disposal Areas. A crosswalk table (**Table 1**) provides the location in this report of information required by the REC Program Implementation Guidance (NCDENR, 2012).

1.2 Objectives

The objectives of the Phase I RI activities were to identify waste disposal areas, characterize the chemical nature of releases/disposal activities, and to collect sufficient data to establish preliminary remediation goals. To achieve these objectives, the following field investigation activities were implemented:

- Completion of a geophysical survey to determine the extent of buried debris.
- Test pitting to evaluate the horizontal and vertical extents and nature of buried debris.
- Monitoring well installation to provide groundwater data collection points.
- Measurement of groundwater levels at the site to develop a potentiometric surface map.
- Completion of groundwater and soil sampling to establish site-specific background levels and evaluate the nature and extent of chemical releases.

This report presents the results of the investigations, identifies the constituents of potential concern (COPCs) and preliminary remediation goals, refines the conceptual site model (CSM), and presents recommendations for follow-on activities. Based on the presence of waste at the Towers Road Disposal Areas and the strategy to expedite the remediation process, an interim remedial action to remove the waste is planned in conjunction with the Phase II RI; therefore, calculation of adjusted health-based soil remediation goals (SRGs) is included in this report to support anticipated soil confirmation sampling. **Figure 3** shows a timeline of site activities, reporting, and key milestones within the REC program.

SECTION 2

Field Investigation Activities

This section summarizes the field investigation activities of the Towers Road Disposal Areas Phase I RI. The investigation activities presented below occurred from May through June 2013 and in September 2013 and were conducted in accordance with the Phase I RI work plan and Phase I RI work plan addendum, except as noted in Section 2.8. Based on the site location within the secure facility boundary and the protective measures that were implemented, as described in the Phase I RI work plan and Accident Prevention Plan (Appendix D of the Phase I RI work plan), there were no impacts to the surrounding community from exposure to site constituents during this investigation. Waste transported off-site was managed properly as described in the Phase I RI work plan. The Phase I RI activities consisted of civil survey of existing site conditions, geophysical survey, test pitting, surface and subsurface soil sampling, groundwater monitoring well installation, groundwater sampling, and management and disposal of investigation-derived waste (IDW). Photographs of site activities are included in **Attachment A**.

2.1 Site Preparation

Site preparation activities included the following:

- Completion of a subsurface utility location prior to conducting any intrusive activities
- Completion of a site civil survey by a North Carolina registered professional land surveyor to record existing site conditions prior to conducting field activities
- Installation of erosion and sediment controls, prior to conducting any intrusive activities, in accordance with the approved Erosion and Sediment Control Plan (ESCP), the *North Carolina Erosion and Sediment Control Planning and Design Manual* and North Carolina Sedimentation Pollution Control Act of 1973
- Vegetation clearance across forested land within the 2nd Street Disposal Area and 5th Street Disposal Area consisting of selected removal of vegetation and trees to within 6 inches of the ground surface in order to conduct the geophysical survey, collect soil samples, and install groundwater monitoring wells

2.2 Geophysical Survey

NAEVA Geophysics (NAEVA) conducted a geophysical survey to determine the lateral extent (i.e. footprint) of suspected buried debris. The lateral extent of the surveyed area is shown on **Figure 4**. The geophysical investigation at the 2nd Street Disposal Area and 5th Street Disposal Area was completed using the Geonics, Ltd., EM31-MK2 (EM31) terrain conductivity meter based on its capability to identify metallic and non-metallic debris. EM31 data were collected along parallel survey lines spaced approximately 5 feet apart and extending across the accessible portions of each investigation area. This relatively tight survey lane spacing is appropriate for delineating the lateral extent of suspected disposal areas. The EM31 was operated in the vertical dipole orientation, which provides an effective depth of investigation of approximately 18 feet. NAEVA utilized real-time kinematic global positioning systems (GPSs) to record the locations of the survey lines and subsequently translate the EM31 data into geo-referenced coordinates. At the time of the geophysical investigation, the types and quantities of suspected debris at each site were not known. Details of the geophysical survey approach, including equipment, survey execution, and quality control (QC) measures, are provided in the NAEVA final report (**Attachment B**).

2.3 Test Pitting

Following completion of the geophysical survey, test pits were excavated at the 2nd Street Disposal Area and 5th Street Disposal Area to aid in selecting soil sample locations, to evaluate what types of waste are present, and to assist with waste characterization for anticipated future disposal. Test pitting continued vertically until the water table was encountered (generally 4 to 6 feet below the ground surface), with the exception of one test pit that was excavated below the water table (test pit 60). All test pitting materials were placed back into the excavation area and the excavation area was restored through the application of a permanent seed mix. Heavy equipment used to excavate the test pits was decontaminated using dry methods consisting of removing excess dirt from the equipment following completion of each test pit. Test pit locations are shown on **Figure 4**.

2.4 Soil Sampling

Soil sampling was conducted to establish background levels and characterize the nature and extent of chemical releases. All soil sampling was conducted in accordance with the Quality Assurance Project Plan (QAPP) (Phase I RI work plan Appendix H). Soil sample locations were selected based on the results of test pitting and the geophysical survey and the following:

2nd Street Disposal Area

- Surface soil sample locations included areas within the proximity of former sample locations 2-1 and 2-2 (**Figure 4**) to evaluate elevated chromium and mercury detected during the 2012 soil sampling event
- Subsurface soil sample locations included areas within the proximity of former sample location 2-2 (**Figure 4**) to evaluate elevated chromium and mercury detected during the 2012 soil sampling event

5th Street Disposal Area

- Surface soil sample locations included areas within the proximity of former sample locations 5-3 and 5-4 (**Figure 4**) to evaluate elevated chromium and mercury detected during the 2012 soil sampling event
- Subsurface soil sample locations included areas within the proximity of former sample location 5-3 (**Figure 4**) to evaluate elevated chromium and mercury detected during the 2012 soil sampling event

Background

- One surface/subsurface soil sample approximately 725 feet upgradient (assumed) of the 2nd Street Disposal Area
- One surface/subsurface soil sample approximately 40 feet upgradient (assumed) of the 5th Street Disposal Area
- One surface/subsurface soil sample approximately 540 feet upgradient (assumed) and between the 2nd Street Disposal Area and 5th Street Disposal Area
- One surface/subsurface soil sample approximately 235 feet downgradient (assumed) of the 2nd Street Disposal Area (Note, although downgradient background locations are not typical, this location was believed to be outside of the area of impact from 2nd Street Disposal Area. If concentrations of metals were noticeably different in this soil sample location than the others, the location would not be included in the background data set)
- One surface/subsurface soil sample approximately 540 feet crossgradient (assumed) of the 5th Street Disposal Area

2.4.1 Surface Soil Sampling

Surface soil samples within the 2nd Street Disposal Area and 5th Street Disposal Area were collected using a hand auger at 6 to 12 inches bgs for VOCs and 0 to 6 inches bgs for all other analytes. Background samples were collected from 6 to 12 inches bgs to prevent collection of topsoil in accordance with REC Program Implementation Guidance. The surface soil sampling locations are shown on **Figure 4**.

Five surface soil samples were collected at each disposal area. The following parameters were analyzed and reported:

- VOCs (grab sample) including tentatively identified compounds (TICs)
- Semivolatile organic compounds (SVOCs) (4-point composite sample) including TICs
- Pesticides/PCBs (4-point composite sample)
- Metals (4-point composite sample)

A total of three surface soil samples (two samples from the 2nd Street Disposal Area and one sample from the 5th Street Disposal Area) were selected based on their proximity to the elevated chromium and mercury detections during the 2012 sampling event and analyzed for the analytes listed above and the following parameters:

- Mercury
- Hexavalent chromium

Five grab surface soil samples were collected at locations outside of the 2nd Street Disposal Area and 5th Street Disposal Area to establish a background data set. The samples were collected at three upgradient locations, one downgradient location, and one crossgradient location. The excess soil from the surface soil sampling was returned to the sample location. The samples were analyzed for the following parameters:

- Metals (all sample locations)
- Mercury (sample location HPDTA-BG-SS03, most upgradient of the disposal area boundaries)
- Hexavalent chromium (sample location HPDTA-BG-SS03, most upgradient of the disposal area boundaries)

2.4.2 Subsurface Soil Sampling

A total of 18 soil borings were advanced using the DPT rig. Continuous soil cores were retrieved from each boring using an open core barrel and piston DPT sampling device along with 4-foot disposable acetate liners. All of the borings were advanced to the water table. The subsurface soil sampling locations are shown on **Figure 4**.

Subsurface soil samples were collected from the following two depth intervals:

- 0.5 foot to 1 foot bgs
- 2-foot interval directly above the water table

The subsurface soil samples were collected at seven locations within the 2nd Street Disposal Area and six locations within the 5th Street Disposal Area. The specific sample point in the interval was field-determined. The field team used the photoionization detector (PID) to screen the soil core. If there was an elevated response, samples were biased to that depth interval. If there was no elevated response, a composite sample was collected across the depth interval, with the exception of VOC samples, which were not homogenized. The following parameters were analyzed and reported for samples from the 2nd Street Disposal Area and 5th Street Disposal Area:

- VOCs including TICs
- SVOCs including TICs

- Pesticides/PCBs
- Metals

Two sample locations from each disposal area were selected based on their proximity to the elevated chromium and mercury detections during the 2012 sampling event and were analyzed for the analytes listed above and the following parameters:

- Mercury
- Hexavalent Chromium

Five locations outside of the 2nd Street Disposal Area and 5th Street Disposal Area were sampled to establish a background data set. The samples were collected at three upgradient locations and two downgradient/crossgradient locations. The soil cuttings from the subsurface soil sampling were contained in 55-gallon drums for staging and subsequent disposal. The samples were analyzed for the following parameters:

- Metals (all sample locations)
- Mercury (sample location HPDTA-BG-SB03, most upgradient of the disposal area boundaries)
- Hexavalent chromium (sample location HPDTA-BG-SB03, most upgradient of the disposal area boundaries)

2.5 Monitoring Well Installation

Eight monitoring wells were installed, including two monitoring wells within the 2nd Street Disposal Area, two monitoring wells within the 5th Street Disposal Area, and four background monitoring wells. The well locations are shown on **Figure 4**. The well locations were selected based on the results of test pitting and geophysical surveying activities and the following:

2nd Street Disposal Area

- One well in the central portion of the waste area and to evaluate a potential upgradient source of low levels of vinyl chloride identified during the 2012 groundwater sampling event
- One well southeast of former location 2-2 (**Figure 4**), where the highest metals concentrations were detected during the 2012 groundwater sampling event, to evaluate any impacts to groundwater from likely buried debris located in the northeast area of the site

5th Street Disposal Area

- One well slightly upgradient of former sample location 5-2 (**Figure 4**) to serve as a permanent point for evaluating vinyl chloride detected during the 2012 groundwater sampling event at a concentration greater than the regulatory standard in this area
- One well slightly up/cross gradient of previous sample location 5-4 (**Figure 4**) to assess site impacts and to determine if there is a upgradient source of VOCs to location 5-2

Background

- One monitoring well approximately 725 feet upgradient (assumed) of the 2nd Street Disposal Area
- One monitoring well approximately 40 feet upgradient (assumed) of the 5th Street Disposal Area
- One monitoring well approximately 540 feet upgradient (assumed) and between the 2nd Street Disposal Area and 5th Street Disposal Area
- One monitoring well approximately 235 feet downgradient of the 2nd Street Disposal Area (Note, although downgradient background locations are not typical, this location was believed to be outside of the area of impact from the 2nd Street Disposal Area and selected to verify the groundwater flow

pattern. If concentrations of metals were noticeably different in this monitoring well than the others, the well would not be included in the background data set.)

Drilling and well installation activities were conducted by a North Carolina licensed driller in accordance with the North Carolina Well Construction Standards and the applicable standard operating procedure (SOP) (Appendix E of the Phase I RI work plan). Monitoring well construction details are summarized in **Table 2**. The well completion diagrams and soil boring logs are included in **Attachment C**. Monitoring well construction permits are not included for the wells installed during the Phase I RI as they were not obtained based on information provided to CH2M HILL from the North Carolina Division of Water Quality Washington Regional Office that well permits are not required for installation by government entities installing wells on government property.

The monitoring wells were generally constructed as follows:

- Boreholes were created using a 4.25-inch inner diameter hollow-stem auger (HSA) to approximately 28 feet bgs. The drill cuttings were contained in 55-gallon drums for staging and subsequent disposal.
- Upon completion of the borehole, approximately 1 foot of sand filter pack was placed on the bottom of the borehole.
- The monitoring wells were constructed within the HSA casing. Each well was constructed using a 20-foot section of 2-inch inner diameter, 0.010-inch machine slotted Schedule 40 polyvinyl chloride (PVC) screen with a bottom cap from approximately 7 to 27 feet bgs. The screen interval was selected in the field by the project hydrogeologist based on encountering the groundwater table at approximately 7 feet bgs and an approximately 2-foot-thick layer of clay encountered at 29 feet bgs at soil boring TR-2ND-MW01, which was the first soil boring completed during the Phase I RI. The screen was connected to threaded, flush-joint, PVC riser. The casing for the wells consisted of new, unused, threaded 2-inch inner diameter Schedule 40 PVC pipe.
- The annular space around the well screens was filled with #1 sand consisting of well-graded; fine to medium silica sand filter pack (thoroughly washed, round, durable, siliceous, material containing less than 5 percent silt or clay). During placement of the filter pack, the bottom cap of the well screen was suspended above the bottom of the borehole. The well casing and screen remained suspended until placement of the filter pack and transition seal (silica sand and bentonite) was completed and set. The top of the casing had a temporary cap during installation of the annulus materials. The sand filter pack extended to approximately 2 feet above the top of the screened interval. The filter pack was installed in approximately 2-foot lifts to prevent bridging. The HSA casing was moved upward as the annulus was filled. The depth to the top of the sand filter pack was measured periodically using a weighted measuring tape.
- Sodium bentonite pellets were placed above the sand pack to form a seal of approximately 3 feet thick. The bentonite was hydrated with potable water, as necessary. The depth to the top of the bentonite seal was measured periodically using a weighted measuring tape.
- After hydration of the bentonite for at least 30 minutes, the remaining borehole annular space was completed with a cement-bentonite grout seal using a tremie pipe method. The grout seal extend from the top of the bentonite seal to approximately 1 foot bgs. The grout seal consisted of Portland cement conforming to American Society for Testing and Materials (ASTM) C-150, Type 1 and was allowed to cure a minimum of 12 hours prior to well completion.
- For the one stickup well, the riser casing was installed approximately 2 feet above the ground surface inside a lockable, steel protective stickup cover pad and a 24-inch-diameter by 4-inch-thick concrete pad. A concrete-filled steel bollard was placed at three locations on the concrete pad. A watertight, locking, expansion cap was installed on top of the PVC well casing. Bollards extended at least 2 feet

into the ground and 3 feet above the ground. The protective casing and guard posts were painted with a bright yellow epoxy paint to prevent rust. A well identification plate was placed on the monitoring well.

- For the seven flush mount wells, the watertight steel cover was installed flush to the ground surface with a 24-inch-diameter by 4 inch-thick concrete pad. A watertight, locking, expansion cap was installed on top of the PVC well casing. A well identification plate was placed inside the watertight steel cover.
- Drill rigs, drill tools, and associated equipment were steam-cleaned with live steam, utilizing high-pressure low-volume steam cleaning, prior to commencement of drilling at each well location at the designated staging area at the 2nd Street Disposal Area.

Monitoring wells were developed by surging (with a surge block) and over-pumping in accordance with the applicable SOP (Appendix E of the Phase I RI work plan). Field parameters [conductivity, temperature, pH, dissolved oxygen (DO), oxidation-reduction potential (ORP), and turbidity] were monitored during development. Development continued until stabilization of the groundwater field parameters and turbidity to the lowest extent practical (usually below 10 Nephelometric Turbidity Units) was achieved. Development pumping and surging did not start until the last grout pumped into the well had at least 24 hours to cure. The development water was contained in 55-gallon drums for staging and subsequent disposal.

Following the completion of monitoring well installation, the monitoring wells were surveyed by a North Carolina registered professional land surveyor, and groundwater elevations within the monitoring wells were measured to define the groundwater flow patterns in order to ensure that at least one monitoring well is installed hydraulically downgradient of the source area following completion of Phase II RI activities. The groundwater potentiometric map is shown on **Figure 5** and the water level data is shown in **Table 3**.

2.6 Groundwater Sampling

Following the completion of monitoring well installation and development activities as well as the collection of groundwater elevations, groundwater samples were collected from the eight monitoring wells (**Figure 4**) in accordance with the QAPP (Appendix H of the Phase I RI work plan) and applicable SOP (Appendix E of the Phase I RI work plan).

Prior to sampling, the pump intake was positioned at the midpoint of the screened interval (approximately 17 feet bgs) and groundwater was extracted at a low rate while pH, specific conductance, DO, ORP, turbidity, and temperature were measured periodically until the parameters had stabilized. Following stabilization of the groundwater parameters, the groundwater samples were collected and sent to the laboratory for analysis of the parameters listed below. Additionally, Hach field test kits were used to analyze for ferrous iron and DO at the time of sample collection.

The groundwater samples within the background areas were analyzed in the laboratory for metals and mercury. The following parameters were analyzed/reported by the laboratory for groundwater samples within the disposal areas:

- VOCs including TICs
- SVOCs including TICs
- Pesticides/PCBs
- Metals
- *Dehalococcoides* (one sample per disposal area)
- Alkalinity
- Chloride

- Dissolved gases; methane
- Nitrate/Nitrite
- Sulfate/Sulfide
- Total organic carbon (TOC)

Additional groundwater grab samples were collected from three locations at the 2nd Street Disposal Area and four locations at the 5th Street Disposal Area to provide more spatial coverage of the areas where monitoring wells were not installed. Groundwater grab samples were collected from the top of the water table to 4 feet below the water table at all of the DPT soil boring locations that were not co-located with a monitoring well. All groundwater grab samples were analyzed in the laboratory and reported for VOCs and SVOCs including TICs.

All pumping equipment, water quality meters, and water-level indicator probes and cable were decontaminated in accordance with the applicable SOP (Phase I RI work plan Appendix E). The decontamination fluids and purge water were contained in 55-gallon drums for staging and subsequent disposal.

2.7 Investigation-derived Waste Management

IDW consisting of soil cuttings from the monitoring well installation, purged/excess groundwater, and decontamination fluids was placed in 55-gallon drums. As required by the disposal facility, the contents of the drums were sampled for full Toxicity Characteristic Leaching Procedure, ignitability, corrosivity, and reactivity. The results characterized the IDW as non-hazardous. A total of 17 solid and 12 aqueous 55-gallon drums were transported as non-hazardous waste to a permitted disposal facility (The Environmental Quality Company – Atlanta).

2.8 Deviations from the Work Plan

The investigation was conducted in accordance with the Phase I RI work plan and Phase I RI work plan addendum, with the following exceptions:

- One test pit, test pit 60, was excavated below the water table based on evidence from the installation that drums were buried at that specific location.
- Groundwater grab samples were collected from three locations at the 2nd Street Disposal Area and four locations at the 5th Street Disposal Area to provide more spatial coverage of the areas where monitoring wells were not installed.
- Subsurface soil samples were collected from seven locations within the 2nd Street Disposal Area and six locations within the 5th Street Disposal Area. The total number of subsurface soil samples was the same as the work plan; however, the number of samples per disposal area was reversed based on the results of the geophysical survey and test pitting which identified a larger waste/debris area at 2nd Street.
- One background monitoring well was installed approximately 235 feet downgradient (assumed) of the 2nd Street Disposal Area; although downgradient background locations are not typical, this location was believed to be outside of the area of impact from the 2nd Street Disposal Area and selected to verify the groundwater flow pattern.
- One surface/subsurface background soil sample was collected approximately 235 feet downgradient (assumed) of the 2nd Street Disposal Area; although downgradient background locations are not typical, this location was believed to be outside of the area of impact from 2nd Street Disposal Area.

- One surface/subsurface soil sample approximately 540 feet crossgradient (assumed) of the 5th Street Disposal Area. This location was believed to be outside of the area of impact from the 5th Street Disposal Area.

2.9 Quality Assurance and Quality Control

Quality assurance (QA)/QC samples were collected in accordance with the QAPP (Appendix H of the Phase I RI work plan), Navy, and CH2M HILL protocols. Field QA/QC samples consisted of the following:

Equipment Rinsate Blank Samples

One equipment rinsate blank (ERB) was collected per type of sampling equipment lot and analyzed for the same parameters as the corresponding samples. ERBs are samples of ASTM Type II water passed through and over the surface of decontaminated sampling equipment. The rinse water was collected in sample bottles, preserved, and handled in the same manner that was used when collecting aqueous samples, even if the ERBs were being collected for soil samples. ERBs are used to monitor the effectiveness of the decontamination process.

Trip Blanks

One trip blank was shipped with each cooler containing VOC samples. Trip blanks are sent with each cooler shipped to the offsite laboratory containing samples requiring VOCs analysis. Trip blanks consist of a sample of analyte-free media taken from the laboratory to the sampling site and returned to the laboratory unopened. A trip blank is used to document contamination attributable to shipping and field handling procedures. This type of blank is useful in documenting contamination of VOC samples.

Temperature Blanks

One temperature blank was shipped with each cooler to each offsite laboratory. Temperature blanks were sent with each cooler shipped to the offsite laboratory containing samples requiring preservation at 4 degrees Celsius. Temperature blanks consist of a non-preserved VOCs vial, or similar laboratory container, filled with ASTM reagent grade water. Temperature blanks were measured at the laboratory upon receipt to verify the temperature of the samples contained in the cooler.

Duplicate Field Samples

Duplicate field samples were collected to monitor the precision of the field sampling process. Ten percent (per matrix) of the total number of sample locations known or suspected to contain moderate contamination was chosen, and duplicate field samples were collected at these locations.

Laboratory QA/QC was performed in accordance with the QAPP (Phase I RI work plan Appendix H) and the laboratories Quality Control Plan (QCP). Laboratory reports are included in **Attachment D**. Laboratory QA/QC samples consisted of the following:

Laboratory Method/Preparation Blanks

Laboratory method blanks are blank matrices (such as ASTM Type II water or Ottawa sand) that are treated as environmental samples, being prepared and analyzed along with the field samples. Laboratory method blanks were used to monitor laboratory performance and to check for contamination introduced during the preparation and analytical procedures. A method blank was required for every 20 field samples or for each analytical batch, whichever is more frequent.

Blank samples should not contain any target parameter of interest. There are certain organic compounds known to be common laboratory contaminants, such as acetone, methylene chloride,

and the common phthalates. However, the laboratory must make all efforts to eliminate these compounds as contaminants. The concentration of all target compounds must be less than the reporting limit (RL), except for the common contaminants; the concentration of the common contaminants must be less than five times the RL.

Surrogate Spikes

Surrogate spike compounds were added to each sample for the organic analytical methods. Surrogate spike compounds are structurally similar (but not identical) to target compounds and should behave in a similar manner during analysis. Surrogate spike recoveries were used to monitor both laboratory performance and matrix interferences. Surrogate spike recoveries from field and laboratory blanks were used to evaluate laboratory performance because these blanks represent an ideal sample matrix. Surrogate spike recoveries for field samples were used to evaluate the potential for matrix interferences. When surrogate spike recoveries for field samples fell outside the method target acceptance windows, the samples were re-extracted if appropriate, then re-analyzed. In some instances the surrogate spike recovery was still outside the acceptance window for the re-analyzed sample; the sample results were then qualified as affected by matrix interferences.

Laboratory Control Spike Samples

The laboratory control spike samples (LCSs) are analyte-free water (for aqueous analyses) or Ottawa sand (for soil analyses) (except metals where glass beads of 1-millimeter diameter or smaller may be used) spiked with all target analytes. The appropriate spiking concentrations were spiked at a level less than or equal to the midpoint of the calibration curve for each analyte.

The LCS was carried through the complete sample preparation and analysis procedure. The LCS was used to evaluate each preparation and analytical batch and to determine if the method was in control. The LCS cannot be used as the continuing calibration verification. One LCS was included in every preparation and analytical batch. Whenever an analyte in a LCS was outside the acceptance limit, corrective action (CA) was performed. After the system problems were resolved and system control was reestablished, all samples in the analytical batch were reanalyzed for the out-of-control analyte(s).

Interference Check Samples

The interference check sample (ICS), used in inductively coupled plasma analyses only, contains both interfering and analyte elements of known concentrations. The ICS was used to verify background and interelement correction factors and was run at the beginning and end of each run sequence.

When the ICS results were outside of the acceptance limits as prescribed in the method, CA was performed. After the system problems were resolved and system control was re-established, the ICS was re-analyzed. If the ICS result were acceptable, all affected samples were re-analyzed.

Internal Standards

Internal standards (ISs) are known amounts of certain compounds added after preparation or extraction of a sample. These compounds were used in an IS calibration method to correct sample results affected by column injection losses, purging losses, or viscosity effects. ISs were added to environmental samples, control samples, and blanks in accordance with the method requirements.

When the IS results were outside of the acceptance limits, CAs were performed. After the system problems were resolved and system control was reestablished, all samples analyzed while the system was malfunctioning were reanalyzed.

Retention Time Windows

Retention time windows are established to compensate for minor shifts in absolute retention times resulting from normal chromatographic variability. Absolute retention times were used for analyte identification in all gas chromatography (GC) and high-performance liquid chromatography (HPLC) methods that do not employ IS calibration. Retention time windows were used in GC and HPLC analysis for qualitative identification of analytes. They were calculated from replicate analyses of a standard on multiple days. If the analyte retention time was outside the established window, new retention windows were established.

Confirmation of Identification

Quantitative confirmation of results at or above the RL for samples analyzed by GC or HPLC were required and were completed within the method-required holding times. For GC methods, a second column was used for confirmation. For HPLC methods, a second column or a different detector was used. The result from the lowest quantitation between the primary and secondary column/detector were used for reporting purposes. The lowest quantitation was reported to minimize the reporting of bias high results arising from co-elution of non-target analytes with the analyte of interest.

Standard Materials

In addition to the laboratory QA/QC samples standard materials, including second-source materials, used in calibration and to prepare samples were traceable to National Institute of Standards and Technology, United States Environmental Protection Agency (USEPA), or American Association of Laboratory Accreditation-approved sources. The standard materials were labeled to ensure that they had not expired. A second-source standard was used to independently confirm initial calibration. A second-source standard is a standard purchased from a different vendor than the vendor supplying the material used in the initial calibration standards. The second-source material was used for the continuing calibration standards or for the LCS. Two different lot numbers from the same vendor do not constitute a second source.

Routine field inspections and observations verified that the objectives of the Phase I RI complied with the Phase I RI work plan, specifically Section 5, QCP and the Phase I RI work plan addendum. Additionally, the senior project hydrogeologist visited the site on the first day of drilling operations to verify the plans were being followed and observe site lithology to confirm the sampling plan was appropriate based on actual site conditions. The work plan QCP established the audit procedures, corrective/preventative action, records generation, submittal management, and testing and maintenance procedures to be followed during Phase I RI activities. QC inspections during the Phase I RI included verification of training and qualifications, inspections of equipment and site setup/layout, and confirmation of compliance with plans. The Project Manager ensured that all planning documents were approved and that coordination was completed prior to mobilization. The Field Team Leader confirmed that training requirements and qualifications were correct. Daily inspections of all heavy equipment (i.e. drill rig, forklift, skidsteer, excavator, backhoe, and brush hog) and sampling equipment (i.e. peristaltic pump, water quality meter, submersible pump, PID, GPS, hand auger) was completed by the contractor operating the equipment prior to beginning work each day. The inspections were overseen by the Field Team Leader. There were no deviations from the QCP.

SECTION 3

Investigation Results

This section describes the results of the Phase I RI, which included a geophysical survey of the disposal areas, a total of 60 test pits excavated across the two disposal areas, 15 surface soil samples, 36 subsurface soil samples, eight monitoring well groundwater samples, and seven grab groundwater samples. Raw analytical data is included in **Attachment E**. TICs are included in **Attachment F**[1]. The test pit logs are included in **Attachment G**.

3.1 Geophysical Survey Results

The results of the EM31 survey conducted by NAEVA are presented in **Attachment B, Appendix B** as a series of color contour maps. The lateral extent of the suspected buried debris area is summarized on **Figure 6** and **Figure 7**.

3.1.1 2nd Street Disposal Area Results

The results of the EM31 survey at the 2nd Street Northern side of the site appears to delineate a disposal area in the northern portion of the investigation area (**Figure 6**). The approximate dimensions of the disposal area are 125 feet by 150 feet.

The quadrature and in-phase response results indicate that buried metal is associated with this disposal area. The variation between positive and negative in-phase response values is indicative of the presence of pieces of buried metal. The disposal area is characterized in the quadrature response data as a conductivity low (i.e. green contours) relative to the surrounding area (**Attachment B, Appendix B, Figures 1 and 2**). The likely greatest concentration of buried metal would be at locations within the disposal area footprint where the conductivity values are negative (i.e. blue colors) (**Attachment B, Appendix B, Figures 1 and 2**).

Additional mapped features at this site include a potential underground utility in the southeast portion of the investigation area bisecting Flat Run Road as well as utilities or utility-related structures (e.g. manhole) extending parallel to 2nd Street.

3.1.2 5th Street Disposal Area Results

The 5th Street Disposal Area EM31 survey was more greatly impacted by existing manmade features in comparison to the 2nd Street Disposal Area. The presence of reinforced concrete slabs on both sides of 5th Street is represented by the strongly negative and large in-phase responses (i.e. dark blue and pink colors) (**Attachment B, Appendix B, Figure 4**). The sensitivity of the EM31 also results in a halo effect around the perimeter of the slabs, where elevated responses are recorded by the instrument as it is carried within approximate 20 feet of the edge of the slabs. This effect adversely impacts the ability to interpret sub-slab conditions as well as subsurface conditions within the halo footprint around the existing slabs.

The results of the EM31 survey at the 5th Street Disposal Area appear to delineate a disposal area in the northwest portion of the investigation area (**Figure 7**). The approximate dimensions of the disposal area are 50 feet by 40 feet. NAEVA also identified a potential underground utility trench extending along the north side of the most central concrete slab and bending to the south, generally following the eastern edge of the slab. The suspected disposal area and utility trench are characterized by extreme negative

[1] TICs are not quantitative values, but instead are rough estimates of concentrations of given compounds. These estimates are highly uncertain and could be orders of magnitude higher or lower than the actual concentration. For TICs, therefore, assigned identities may be inaccurate, and quantitation is certainly inaccurate.

and positive conductivity and in-phase responses (**Attachment B, Appendix B, Figures 3 and 4**). These responses are typical of buried metal.

3.2 Test Pitting Results

Test pits were excavated across both disposal areas based on the results of the 2011 and 2013 geophysical surveys. Test pits were excavated in approximately 5-foot by 5-foot squares down to the water table with the exception of test pit 60 which was excavated down to approximately 10 feet bgs to determine if any debris was located below the water table. The location of test pit 60 was determined based on information from the installation that drums were buried at that specific location.

3.2.1 2nd Street Disposal Area

The 2nd Street Disposal Area test pit locations containing debris were generally located in the central portion of the site from 0 to 6 feet bgs, with the notable exception of test pit 60. Test pit 60 did not have any debris from the ground surface to approximately 9 feet bgs, but within the 9 to 10 feet bgs interval two partial, unlabeled 55-gallon drums that appeared to be empty were identified. Because of instability from groundwater infiltration, the test pit was not dug any deeper than 10 feet bgs for further inspection; therefore, there is uncertainty associated with the depth of the debris in this location. A subsurface soil sample (TR-2ND-SB06-05-07-0613 at a depth of 5 to 7 feet bgs) and a grab groundwater sample (TR-2ND-SB06-GW-0613 at a depth of 12 to 16 feet bgs) were collected in the vicinity of the drums; see **Sections 3.3.3.1** and **3.4.2**, respectively, for results. The drums were left in place. The debris within the 2nd Street Disposal Area test pits consisted of bottles, bricks, scrap metal, logs, drums, wire cable, scrap metal, bottles, glass, concrete, bricks, rebar, metal piping, and metal plates. **Figure 6** shows the location of the test pits along with a general description of the type of material found in test pits that contained debris and the corresponding depth(s) of the debris.

It is noted that test pit 60 does not coincide with an EM31 conductivity or in-phase anomaly. This is most likely because of the fact that two drums were contained in the pit at a depth of approximately 10 feet and below the water table. In addition, the location of the test pit was superimposed on the geophysical survey lanes and was determined to have been dug between two adjacent passes with the EM31.

3.2.2 5th Street Disposal Area

The 5th Street Disposal Area test pit locations containing debris were generally located in the central and eastern portions of the site from 0 to 6 feet bgs. The debris within the 5th Street Disposal Area test pits consisted of scrap metal, tires, steel pipes, sheet metal, bricks, glass, logs, rebar, car parts, and fiberglass. **Figure 7** shows the location of the test pits along with a general description of the type of material found in test pits that contained debris and the corresponding depth(s) of the debris.

3.3 Soil Analytical Results

Soil analytical results were screened against the IHSB July 2013 Protection of Groundwater, Residential Health-based, and Industrial Health-based PSRGs. Additionally, results were evaluated to determine what constituents will need to be further evaluated during the Phase II RI. In accordance with REC Program Implementation Guidance, whether or not a chemical exceeds a PSRG, all detected chemicals must be delineated to PSRGs during the Phase 2 RI unless the chemicals are determined to a result of naturally occurring conditions or are common laboratory contaminants that are not site-related. Constituents identified for inclusion in the Phase 2 RI are identified in this report as COPCs.

3.3.1 Background

Five surface soil and five subsurface soil samples were collected at locations outside of the 2nd Street Disposal Area and 5th Street Disposal Area to establish a background data set for naturally occurring conditions (**Table 4**). The background samples were analyzed for metals to provide comparison criteria for the metals detections at the 2nd Street Disposal Area and 5th Street Disposal Area. A qualitative

evaluation of the data did not identify any outliers; therefore, the maximum background concentration for each metal was selected for comparison to site data. The minimum and maximum detected background concentrations are presented in **Table 4**.

3.3.2 Surface Soil

A total of 10 surface soil samples were collected during Phase I RI activities across the 2nd Street Disposal Area and 5th Street Disposal Area.

3.3.2.1. 2nd Street Disposal Area

Five surface soil samples were collected from the 2nd Street Disposal Area during Phase I RI activities (**Figure 8**). A total of one VOC, 18 SVOCs, two PCBs, and 21 metals were detected in surface soil (**Table 5**). There were no detections of pesticides. A total of three VOC and 26 SVOC TICs were detected in the 2nd Street Disposal Area surface soil (**Attachment F**).

Comparison to Preliminary Soil Remediation Goals

Three SVOCs, one PCB, and 10 metals exceeded the Protection of Groundwater PSRG (**Figure 8**[2]). Five SVOCs and eight metals exceeded the Residential Health-based PSRG. One SVOC and two metals exceeded the Industrial Health-based PSRGs. For PCBs and metals, the detections exceeding the PSRGs were primarily located within the extent of waste identified during the geophysical surveys and north of Flat Run Road. Metals were also detected above PSRGs in surface soil south of Flat Run Road; however, the concentrations of the metals in that area that exceeded PSRGs were all below the maximum background concentration and considered to be naturally occurring. SVOCs were detected in soil at concentrations exceeding the PSRGs in isolated areas across the northern portion of the site with no definitive pattern.

Identification of Constituents of Potential Concern

Table 6 summarizes the detected analytes, evaluates them in comparison to PSRGs and background levels, and indicates the rationale for whether or not each analyte is a COPC for surface soil to be carried into the Phase II RI. **Attachment F** summarizes the TICs and presents an evaluation of whether or not they should be carried into the Phase II RI as COPCs; no TICs were identified as COPCs. The COPCs for the 2nd Street Disposal Area surface soil consist of 17 SVOCs, two PCBs, and 13 metals (**Table 7**).

3.3.2.2. 5th Street Disposal Area

Five surface soil samples were collected from the 5th Street Disposal Area during Phase I RI activities (**Figure 8**). A total of two VOCs, 18 SVOCs, two PCBs, and 21 metals were detected in surface soil (**Table 8**). There were no detections of pesticides. A total of two VOC and 26 SVOC TICs were detected in the 5th Street Disposal Area surface soil (**Attachment F**).

Comparison to Preliminary Soil Remediation Goals

Four SVOCs, two PCBs, and four metals exceeded the protection of groundwater PSRG (**Figure 8**[3]). Five SVOCs, two PCBs, and four metals exceeded the Residential Health-based PSRG. One SVOC, two PCBs, and one metal exceeded the Industrial Health-based PSRGs. For PCBs and metals, the detections exceeding the PSRGs were primarily located within the extent of waste identified during the geophysical surveys and north of Flat Run Road. Metals were also detected at concentrations exceeding PSRGs in surface soil south of Flat Run Road; however, the concentrations of the metals in that area that exceeded PSRGs were all below the maximum background concentration and considered to be naturally

[2] Metals with concentrations that exceeded PSRGs but were below the maximum background concentration are not presented on the figure because they are considered to be naturally occurring.

[3] Metals with concentrations that exceeded PSRGs but were below the maximum background concentration are not presented on the figure because they are considered to be naturally occurring.

occurring. SVOCs and PCBs were detected in the surface soil south of Flat Run Road at concentrations slightly above the PSRGs; however, there were no signs of disposal operations in the area.

Identification of Constituents of Potential Concern

Table 9 summarizes the detected analytes, evaluates them in comparison to PSRGs and background levels, and indicates the rationale for whether or not each analyte is a COPC for surface soil to be carried into the Phase II RI. **Attachment F** summarizes the TICs and presents an evaluation of whether or not they should be carried into the Phase II RI as COPCs; no TICs were identified as COPCs. The COPCs for the 5th Street Disposal Area surface soil consist of two VOCs, 17 SVOCs, two PCBs, and seven metals (**Table 10**).

3.3.3 Subsurface Soil

A total of 26 subsurface soil samples were collected from 13 soil boring locations during Phase I RI activities. In addition, the eight subsurface soil samples collected in 2012 are incorporated into this results discussion.

3.3.3.1. 2nd Street Disposal Area

A total of 14 subsurface soil samples from seven soil boring locations were collected during Phase I RI activities and four subsurface soil samples were collected during the 2012 sampling event (**Figure 9**). A total of 16 VOCs, 19 SVOCs, two PCBs, and 23 metals were detected in subsurface soil (**Table 11**). There were no detections of pesticides. A total of 11 VOC and 23 SVOC TICs were detected in the 2nd Street Disposal Area subsurface soil (**Attachment F**).

Comparison to Preliminary Soil Remediation Goals

Three SVOCs, two PCBs, and 11 metals exceeded the Protection of Groundwater PSRG; five SVOCs and 10 metals exceeded the Residential Health-based PSRG; and three metals exceeded the Industrial Health-based PSRGs (**Figure 9**[4]). For PCBs and metals, the detections exceeding the PSRGs were generally located within the extent of waste identified during the geophysical surveys. Metals were also detected above PSRGs in subsurface soil south of Flat Run Road; however, the concentrations of the metals in that area that exceeded PSRGs were all below the maximum background concentration and considered to be naturally occurring. SVOCs were detected in soil at concentrations exceeding the screening levels in isolated areas across the northern portion of the site with no definitive pattern.

Identification of Constituents of Potential Concern

Table 12 summarizes the detected analytes, evaluates them in comparison to PSRGs and background levels, and indicates the rationale for whether or not each analyte is a COPC for subsurface soil to be carried into the Phase II RI. **Attachment F** summarizes the TICs and presents an evaluation of whether or not they should be carried into the Phase II RI as COPCs; no TICs were identified as COPCs. The COPCs for the 2nd Street Disposal Area subsurface soil consist of 13 VOCs, 18 SVOCs, two PCBs, and 14 metals (**Table 7**).

3.3.3.2. 5th Street Disposal Area

A total of 12 subsurface soil samples from six soil boring locations were collected during Phase I RI activities and four subsurface soil samples were collected during the 2012 sampling event (**Figure 9**). A total of 17 VOCs, 16 SVOCs, two PCBs, one pesticide, and 23 metals were detected in subsurface soil (**Table 13**). A total of one VOC and 16 SVOC TICs were detected in the 5th Street Disposal Area subsurface soil (**Attachment F**).

[4] Metals with concentrations that exceeded PSRGs but were below the maximum background concentration are not presented on the figure because they are considered to be naturally occurring.

Comparison to Preliminary Soil Remediation Goals

Two VOCs, one SVOC, two PCBs, and 10 metals exceeded the Protection of Groundwater PSRG (**Figure 9**[5]); five SVOCs, two PCBs, and nine metals exceeded the Residential Health-based PSRG; and one SVOC, two PCBs, and one metal exceeded the Industrial Health-based PSRGs (**Figure 9**[6]). For PCBs and metals, the detections exceeding the PSRGs were generally located within the extent of waste identified during the geophysical surveys. SVOCs were detected in subsurface soil at concentrations exceeding the PSRGs in isolated areas across the northern portion of the site with no definitive pattern. Metals were also detected above PSRGs in subsurface soil south of Flat Run Road; however, the concentrations of the metals in that area that exceeded PSRGs were all below the maximum background concentration and considered to be naturally occurring.

Identification of Constituents of Potential Concern

Table 14 summarizes the detected analytes, evaluates them in comparison to PSRGs and background levels, and indicates the rationale for whether or not each analyte is a COPC for subsurface soil to be carried into the Phase II RI. **Attachment F** summarizes the TICs and presents an evaluation of whether or not they should be carried into the Phase II RI as COPCs; no TICs were identified as COPCs. The COPCs for the 5th Street Disposal Area subsurface soil consist of 15 VOCs, 15 SVOCs, one pesticide, two PCBs, and 12 metals (**Table 10**).

3.4 Groundwater Analytical Results

A total of eight monitoring well groundwater samples and seven grab groundwater samples were collected during Phase I RI activities. In addition, the eight grab groundwater samples collected in 2012 are incorporated into this results discussion. The analytical results were screened against the applicable regulatory standards, which are either the February 2012 North Carolina Groundwater Quality Standards (NC2LGW) or the North Carolina Groundwater-Interim Maximum Allowable Concentrations (NC GW-IMAC) for all analyte groups. **Figure 10** shows the locations of the groundwater samples and the exceedances of the screening criteria for the 2nd Street Disposal Area and 5th Street Disposal Area.

3.4.1 Background Data

Four groundwater monitoring well samples were collected at locations outside of the 2nd Street Disposal Area and 5th Street Disposal Area to establish a background data set (**Table 15**). The background samples were analyzed for metals to determine naturally occurring conditions for comparison to the metals detections at the 2nd Street Disposal Area and 5th Street Disposal Area. A qualitative evaluation of the data did not identify any outliers in the background data set, including the well installed approximately 235 feet downgradient of the 2nd Street Disposal Area; therefore, the maximum background concentration for each metal was selected for comparison to site data. The minimum and maximum detected background concentrations are summarized in **Table 15**.

3.4.2 2nd Street Disposal Area

A total of two monitoring well groundwater samples and three grab groundwater samples were collected during Phase I RI activities and 4 grab groundwater samples were collected during the 2012 sampling event; results are summarized in **Table 16**. A total of 13 VOCs, one SVOC, and 17 metals were detected in groundwater. Wet chemistry analytes (Alkalinity, chloride, nitrate, nitrite, sulfate, sulfide, and TOC) were only collected at the two monitoring well locations. There were no detections of pesticides or PCBs. *Dehalococcoides* analysis was conducted at TR-2ND-MW01 and was not detected. Only one VOC TIC was detected in the 2nd Street Disposal Area groundwater (**Attachment F**).

---

[5] Metals with concentrations that exceeded PSRGs but were below the maximum background concentration are not presented on the figure because they are considered to be naturally occurring.

[6] Metals with concentrations that exceeded PSRGs but were below the maximum background concentration are not presented on the figure because they are considered to be naturally occurring.

Comparison to Regulatory Standards

A total of two VOCs, one SVOC, and four metals were detected at a concentration above their respective regulatory standard (**Table 16**). For VOCs and metals the detections exceeding the PSRGs were generally located within the extent of waste identified during the geophysical surveys. SVOCs were detected in groundwater at concentrations exceeding the screening levels in isolated areas across the site with no definitive pattern.

Identification of Constituents of Potential Concern

Table 17 summarizes the chemicals detected in groundwater, evaluates them in comparison to the regulatory standards and background levels, and indicates the rationale for whether or not each analyte is a COPC. **Attachment F** summarizes the TICs and presents an evaluation of whether or not they should be carried into the Phase II RI as COPCs; no TICs were identified as COPCs. The COPCs for the 2nd Street Disposal Area groundwater consist of 10 VOCs, one SVOC, and five metals (**Table 7**).

3.4.3 5th Street Disposal Area

A total of two monitoring well groundwater samples and four grab groundwater samples were collected during Phase I RI activities as well as four grab groundwater samples were collected during the 2012 sampling event; results are summarized in **Table 18**. A total of 15 VOCs, four SVOCs, and 18 metals were detected in groundwater. Wet chemistry analytes (Alkalinity, chloride, nitrate, nitrite, sulfate, sulfide, and TOC) were only collected at the two monitoring well locations. There were no detections of pesticides or PCBs. *Dehalococcoides* analysis was conducted at TR-5TH-MW01 and was not detected. Only one SVOC TIC was detected in the 5th Street Disposal Area groundwater (**Attachment F**).

Comparison to Regulatory Standards

A total of six VOCs, one SVOC, and four metals were detected at concentrations above their respective regulatory standard (**Table 18**). For VOCs and metals, the detections exceeding the regulatory standards were generally located within the extent of waste identified during the geophysical surveys.

Identification of Constituents of Potential Concern

Table 19 summarizes the chemicals in groundwater, evaluates them in comparison to the regulatory standards and background levels, and indicates the rationale for whether or not each analyte is a COPC. The COPCs for the 5th Street Disposal Area groundwater consist of 13 VOCs, four SVOCs, and 12 metals (**Table 10**).

SECTION 4

Conceptual Site Model

The CSM summarizes the site conditions; historical, current, and future land use; constituent sources; nature and extent of constituents; potentially impacted receptors and exposure pathways; fate and transport pathways; and data gaps.

4.1 2nd Street Disposal Area

Site Characteristics

- **Size:** Approximately 1.9 acres
- **Land Use:** Historical land uses included disposal activities. The area is currently not utilized for any facility activities. Surficial aquifer groundwater from the area is not currently used as a potable water supply. The facility uses four supply wells, ranging in depth from 80 to 120 feet bgs, located within ½-mile radius (2,640 feet), and upgradient of the 2nd Street Disposal Area, to meet the water needs for the facility (**Figure 11**). The current and reasonably anticipated future land use of the areas is not expected to change.
- **Topography:** The 2nd Street Disposal Area is primarily a grassy field. The ground surface is relatively flat and ranges in elevation from approximately 6 to 8 feet above mean seal level.
- **Geology and Hydrogeology:** The maximum investigation depth within the area was 40 feet bgs. Subsurface soil in the vadose zone consists primarily of fine to medium grain silty sand. The water table (surficial aquifer) was encountered at depths ranging from 4 feet to 5 feet bgs. Groundwater in the surficial aquifer flows to the northeast towards the Perquimans River (**Figure 5**). Saturated zone soil consists primarily of fine to medium grain silty sand with variable amounts of clay. During drilling, an approximately 2-foot-thick clay layer was encountered at approximately 29 feet bgs at both borings. Based on the limited data available, there is uncertainty as to whether or not the 2-foot clay layer is continuous across the site. Fine to coarse grain silty sand is present beneath the clay layer to the maximum investigation depth of 40 feet bgs. Based on the boring and test pit log descriptions, one cross section for the disposal area was created to illustrate the subsurface environment. The location of the cross section is depicted on **Figure 12** and the cross section is presented on **Figure 13**.

Potential Sources of Contamination

- **Historical Site Use:** The 2nd Street Disposal Area was reportedly used for the disposal of trash that included paper, utensils, computer disks, broken dishes, glass, guns (but no ammunition),and drums.

Nature and Extent of Contamination:

- **Extent of Waste:** The geophysical survey completed in 2013 appears to delineate an approximately 125-foot by 150-foot disposal area in the northern portion of the investigation area. The results of the test pitting activities showed debris generally located in the central portion of 2nd Street Disposal Area. Debris consisted of both metallic and non-metallic materials including, but not limited to, metal pipes, scrap metal, bottles, brick, and logs. The test pitting confirmed the presence of two empty drums at depths below the groundwater table (9 to 10 feet bgs). No debris was identified within the portion of the investigation area that is south of Flat Run Road (**Figure 6**). Based on the results of the geophysical survey and test pitting activities, the extent of waste at the 2nd Street Disposal Area covers approximately 0.7 acre.

- **Surface Soil:** SVOCs, PCBs, and metals were detected in surface soil at concentrations exceeding the PSRGs (i.e., protection of groundwater, residential, and/or industrial PSRG) north of Flat Run Road. The COPCs for surface soil are summarized in **Table 7**.
- **Subsurface Soil:** SVOCs, PCBs, and metals were detected in subsurface soil at concentrations exceeding the PSRGs (i.e., protection of groundwater, residential, and/or industrial PSRG). The COPCs for subsurface soil are summarized in **Table 7**.
- **Groundwater:** VOCs, SVOCs, and metals were detected in groundwater at concentrations exceeding either the NC2LGW or NC GW-IMAC regulatory standards. The COPCs for groundwater are summarized in **Table 7**.

The highest concentrations of constituents in soil were generally detected in samples collected within the extent of waste identified during the geophysical survey north of Flat Run Road. Chemicals in surface and subsurface soils reflective of potential impacts from the disposal area were SVOCs, PCBs, and metals. The metals in soil most indicative of site-related activities were characterized by samples within the extent of waste and included; arsenic, cobalt, lead, manganese, and mercury. With the exception of benzo(a)pyrene, which was detected in all samples collected within the extent of waste, SVOCs were found in soil at concentrations exceeding the PSRGs across the northern portion of the site with no definitive pattern. The highest concentrations of constituents in groundwater were detected in samples collected within the extent of waste identified during the geophysical surveys north of Flat Run Road. However, the extent of concentrations exceeding the regulatory standards cannot be clearly defined by the existing data set. Chemicals in groundwater reflective of potential impacts from the 2nd Street Disposal Area were VOCs and metals. The VOCs and metals in groundwater most indicative of site-related activities were characterized by samples within the extent of waste and included tetrachloroethene, vinyl chloride, cobalt, and manganese. One SVOC, bis(2-ethylhexyl)phthalate, was detected at concentrations exceeding the PSRGs in isolated areas across the site with no definitive pattern. Bis(2-ethylhexyl)phthalate is a common lab contaminant and may not be a result of site activities.

Fate and Transport:

The fate and transport mechanisms present at the 2nd Street Disposal Area consist of the following:

- Potential for leaching of metals from buried wastes in soils and infiltration through the vadose zone to groundwater
  - Cobalt and manganese were the only COPCs identified in both groundwater and soil. These metal concentrations in surface and subsurface soil were elevated within the extent of waste; therefore, leaching of the site soil is a potential source of metals to groundwater and infiltration of precipitation through the surface soil vadose zone may dissolve some adsorbed metal COPCs and transport them to the underlying groundwater.
- Dissolved constituent migration downgradient with groundwater flow (advection), additionally resulting in migration to residual pore space
  - Two VOCs, tetrachloroethene and vinyl chloride, were identified as groundwater COPCs. However, the soil is not a likely continuing source of the VOCs to groundwater because these VOCs were not detected in surface or subsurface soil. The detections of VOCs in groundwater at levels that characterize them as COPCs with no VOC COPCs identified in soil would be expected because these constituents are highly mobile in water and are not likely to sorb to soil.
  - One SVOC, bis(2-ethylhexyl)phthalate, was identified as a groundwater COPC. However, the soil is not a likely source of the SVOCs to groundwater because this SVOC was only infrequently

detected (4 out of 19 samples) at concentrations below screening criteria in surface and subsurface soil.

- Biological degradation of groundwater constituents
  - Based on field parameters measured at the 2nd Street Disposal Area (Table 16), condition are mildly oxidizing in the more upgradient of the two site monitoring wells (DO concentration of 3.15 milligrams per liter [mg/L] and ORP of 21.3 millivolts [mV] in TR-2ND-MW02) and mildly reducing in the more downgradient of the two site monitoring wells (DO of 0.61 mg/L and ORP of -172.7 mV in TR-2ND-MW01). Field data are consistent with geochemical data, in which higher concentrations of sulfate and nitrate were detected in TR-2ND-MW02. Conditions present in the downgradient portion of the site (near TR-2ND-MW01) appear favorable for reductive dechlorination of tetrachloroethene, which was detected at a very low concentration in the sample from TR-2ND-MW01. Further support for degradation of this compound is provided by the detection of vinyl chloride in DPT sample, 2nd-3. Because vinyl chloride is not typically used for industrial purposes, and is almost always present as a breakdown product of parent compounds tetrachloroethene and trichloroethene, its presence is an indication that degradation can and is occurring at the site.

Receptors and Potential Risks:

Human Health: Based on the current and reasonably anticipated future land use, adult visitors are the only expected human receptors for the 2nd Street Disposal Area. However, to be conservative, unlimited use and unrestricted exposure was evaluated and exposure to waste and constituents in soil and groundwater have been identified as potential concerns. There are currently no buildings on or within 100 feet of the 2nd Street Disposal Area; therefore, vapor intrusion is not a currently complete exposure pathway and an evaluation of subsurface vapor intrusion is not required by the REC Program Implementation Guidance.

Ecological: Due to the lack of sensitive environmental areas and the fact that site drainage is not anticipated to enter the nearby wetlands, there are no ecological receptors of concern at the 2nd Street Disposal Area and an ecological risk assessment is not warranted.

Data Gap Summary:

- The vertical extent of waste at 2nd Street has not been delineated based on finding waste below the water table at test pit 60 collected within the 2nd Street Disposal Area.
- The horizontal and vertical extent of COPCs in surface soil and subsurface soil and horizontal extent of COPCs in groundwater has not been fully delineated.

4.2 5th Street Disposal Area

Site Characteristics

- **Size:** Approximately 2.1 acres
- **Land Use:** Historical land uses included disposal activities as well as breaching with explosives on the concrete area on the north side of Flat Run Road at the 5th Street Disposal Area. The 5th Street Disposal Area concrete area on the south side of Flat Run Road is used for temporary storage of supplies and equipment. Surficial aquifer groundwater from the 5th Street Disposal Area is not currently used as a potable water supply. The facility uses four supply wells, ranging in depth from 80 to 120 feet bgs, located within ½-mile radius (2,640 feet), and upgradient of the 5th Street Disposal Area, to meet the water needs for the facility (**Figure 11**). The current and reasonably anticipated future land use of the disposal areas is not expected to change.

- **Topography:** The 5th Street Disposal Area contains a concrete area and a grassy field. The ground surface is relatively flat and ranges in elevation from approximately 5 to 7 feet above mean sea level.
- **Geology and Hydrogeology:** The maximum investigation depth within the area was 32 feet bgs. Subsurface soil in the vadose and saturated zones at the 5th Street Disposal Area consist primarily of fine to medium grain silty sand with variable amounts of clay. The water table (surficial aquifer) was encountered at depths ranging from 4 feet to 5 feet bgs. Groundwater in the surficial aquifer flows to the northeast towards the Perquimans River (**Figure 5**). During drilling, an approximately 2-foot-thick clay layer was encountered at approximately 29 feet bgs at both borings. Based on the limited data available, there is uncertainty as to whether or not the 2-foot clay layer is continuous across the site. Fine to coarse grain silty sand is present beneath the clay layer to the maximum investigation depth of 32 feet bgs. Based on the boring and test pit log descriptions, one cross section for the disposal area was created to illustrate the subsurface environment. The location of the cross section is depicted on **Figure 12** and the cross section is presented on **Figure 13**.

Potential Sources of Contamination

Historical Site Use: The 5th Street Disposal Area was reportedly used for the disposal of trash that included paper, utensils, computer disks, broken dishes, glass, guns (but no ammunition), safes, metal cars, and PCBs. Diesel and gasoline may have potentially been used at the site as well. A PCB removal action was conducted in 1996 at the 5th Street Disposal Area to dispose of 2,544 tons of PCB-contaminated soil (OHM, 1997).

Based on information from the facility, the concrete pad on the north side of the 5th Street Disposal Area was used to test typical breaching activities. Breaching activities are typically the act of breaking down a door or entrance that has been locked or blocked in some manner. Mock ups of the items to be breached were constructed and then various explosive charges were used to see how the mock ups functioned/performed. The mock up materials were discarded and others mock up materials brought in to replace them for more testing. The typical explosives used for the detonations include C4.

Nature and Extent of Contamination:

- **Extent of Waste:** The geophysical survey completed in 2013 appears to delineate an approximately 50-foot by 40-foot disposal area in the northwest portion of the 5th Street Disposal Area. The 2013 geophysical survey also identified a potential underground utility trench extending along the north side of the most central concrete slab and bending to the south, generally following the eastern edge of the slab. The results of the test pitting activities showed minimal amounts of debris within the vicinity of the 5th Street Disposal Area potential disposal area. The majority of the debris at the 5th Street Disposal Area was encountered in test pits within the general vicinity of the feature identified as a potential utility trench and generally within the upper 6 feet of the subsurface. Debris consisted of both metallic and non-metallic materials including, but not limited to, metal pipes, scrap metal, bottles, brick, and logs. The combination of the test pits and geophysical investigation indicates that debris at the 5th Street Disposal Area was most likely disposed of in a trench-like feature. No debris was identified within the portion of the investigation areas that is south of Flat Run Road (**Figure 7**). Based on the results of the geophysical survey and test pitting activities, the extent of waste at the 5th Street Disposal Area covers approximately 0.6 acre.
- **Surface Soil:** SVOCs, PCBs, and metals were detected in surface soil at concentrations exceeding the PSRGs (i.e., protection of groundwater, residential, and/or industrial PSRG). The COPCs for surface soil are summarized in **Table 10**.
- **Subsurface Soil:** VOCs, SVOCs, PCBs, and metals were detected in subsurface soil at concentrations exceeding the PSRGs (i.e., protection of groundwater, residential, and/or industrial PSRG). The COPCs for subsurface soil are summarized in **Table 10**.

- **Groundwater:** VOCs, SVOCs, and metals were detected in groundwater at concentrations exceeding either the NC2LGW or NC GW-IMAC regulatory standards. The COPCs for groundwater are summarized in **Table 10**.

The highest concentrations of constituents in soil were generally detected in samples collected within the extent of waste identified during the geophysical surveys north of Flat Run Road. Chemicals in surface and subsurface soils reflective of potential impacts from disposal area were SVOCs, PCBs, and metals. With the exception of benzo(a)pyrene, which was detected in samples collected within the extent of waste, SVOCs were found in soil at concentrations exceeding the PSRGs across the northern portion of the site with no definitive pattern. PCBs in soil most indicative of site-related activities were characterized by samples within the extent of waste and included; aroclor-1254 and aroclor-1260.The metals in soil most indicative of site-related activities were characterized by samples within the extent of waste and included; arsenic, cadmium, cobalt, iron, lead, mercury, and zinc. Two VOCs, 1,4-dichlorobenzene and methylene chloride, were detected at concentrations in soil exceeding the PSRGs. Generally, there were more constituents detected at concentrations exceeding the PSRGs in the shallow soil samples (both surface soil and the 0.5 to 1 foot bgs subsurface soil samples) than in the deep subsurface soil samples. The highest concentrations of constituents in groundwater were detected in samples collected within the extent of waste identified during the geophysical surveys. However, the extent of concentrations exceeding the regulatory standards cannot be clearly defined by the existing data set. Chemicals in groundwater reflective of potential impacts from the 5th Street Disposal Area were VOCs and metals. The VOCs and metals in groundwater most indicative of site-related activities were characterized by samples within the extent of waste and included; 1,2,4-trichlorobenzene, 1,2-dichlorobenzene, 1,4-dichlorobenzene, benzene, methyl-tert-butyl ether, vinyl chloride, cobalt, iron, manganese, and vanadium.

Fate and Transport:

The fate and transport mechanisms present at the 5th Street Disposal Area consist of the following:

- Potential for leaching of metals from buried wastes in soils and infiltration through the vadose zone to groundwater
  - Cobalt and iron were the only COPCs identified in both groundwater and soil. These metal concentrations in surface and subsurface soil were elevated within the extent of waste; therefore, leaching of the site soil is a potential source of metals to groundwater and infiltration of precipitation through the surface soil vadose zone may dissolve some adsorbed metal COPCs and transport them to the underlying groundwater.
- Dissolved constituent migration downgradient with groundwater flow (advection), additionally resulting in migration to residual pore space
  - Six VOCs were identified as groundwater COPCs. However, the soil is not a likely a continuing source of the VOCs to groundwater because three of the VOCs were not detected in surface or subsurface soil and the remaining three VOCs were only detected in less than three of the 21 soil samples. The detections of VOCs in groundwater at levels that characterize them as COPCs with no VOC COPCs identified in soil would be expected because these constituents are highly mobile in water and are not likely to sorb to soil.
  - One SVOC, bis(2-ethylhexyl)phthalate, was identified as a groundwater COPC. However, the soil is not a likely source of the SVOCs to groundwater because this SVOC was only infrequently detected (three out of 17 samples) at concentrations below screening criteria in surface and subsurface soil.

- Biological degradation of groundwater constituents
  - Field parameters and geochemical data collected from monitoring wells at the 5th Street Disposal Area are indicative of mildly reducing to oxidizing conditions (**Table 18**). DO values were 0.83 mg/L (TR-5TH-MW01) and 3.51 mg/L (TR-5TH-MW02). ORP values for these wells were 61.6 mV and 139.3 mV, respectively. Sulfate concentrations for these wells were 95 mg/L and 120 mg/L, respectively, also indicative of oxidizing conditions. The more oxidizing of these wells (TR-5TH-MW02) had the greatest number of VOC detections. The six VOCs identified as groundwater COPCs at the 5th Street Disposal Area all have the potential to degrade under the aerobic conditions. Consequently, it is anticipated that natural attenuation of these constituents will occur over time.

Receptors and Potential Risks:

Human Health: Based on the current and reasonably anticipated future land use, adult visitors are the only expected human receptors for the 5th Street Disposal Area. However, to be conservative, unlimited use and unrestricted exposure was evaluated and exposure to waste and constituents in soil and groundwater have been identified as potential concerns. There are currently no buildings on or within 100 feet of the 5th Street Disposal Area; therefore, vapor intrusion is not a currently complete exposure pathway and an evaluation of subsurface vapor intrusion is not required by the REC Program Implementation Guidance.

Ecological: Due to the lack of sensitive environmental areas and the fact that site drainage is not anticipated to enter the nearby wetlands, there are no ecological receptors of concern at the 5th Street Disposal Area and an ecological risk assessment is not warranted.

Data Gap Summary:

- The horizontal extent of waste on the east side of the 5th Street Disposal Area has not been delineated. Debris was encountered at the eastern boundary of the investigation area in test pits 49 and 51 (**Figure 7**). The investigation could not extend further east due to the limits of the ESCP and because the area had not been cleared of subsurface utilities.
- The vertical extent of waste may not have been delineated based on finding waste below the water table at test pit 60 collected within the 2nd Street Disposal Area. Although there were no indications of waste below the water table at the 5th Street Disposal Area during test pitting, there had not been at the 2nd Street Disposal Area either. Therefore, it is possible that waste may be encountered below the water table at the 5th Street Disposal Area during future site activities.
- The horizontal and vertical extent of COPCs in surface soil and subsurface soil and horizontal extent of COPCs in groundwater have not been fully delineated.

SECTION 5

Adjusted Soil Remediation Goals

To support the strategy of expediting site closure by conducting an Interim Remedial Action for waste and in association with the Phase II RI, which will require collection of confirmation soil samples, adjusted SRGs for soil have been calculated. The following sections present the approach and adjusted SRGs. Following the Phase II RI, the calculations will be updated to incorporate Phase II RI results to determine the final remediation goals for the site. The REC program establishes the groundwater remediation goals as the NC2LGW and NC GW-IMAC values. Therefore, no risk calculations are needed for groundwater.

5.1 Health-based Soil Remediation Goals

The health-based PSRGs have been established by North Carolina using current USEPA risk assessment guidance and are based on a lifetime excess cancer risk of 1×10^{-6} (carcinogens) and a hazard quotient of 0.2 (non-carcinogens). The hazard quotient of 0.2 is used to account for multiple (average of five) non-carcinogens in the same critical effect group. The protection of groundwater PSRGs, developed by North Carolina, are developed using a soil leachate model and default values appropriate for North Carolina. Carcinogenic polycyclic aromatic hydrocarbons (PAHs) not listed in the North Carolina PSRG Table are screened using the remediation goal for benzo(a)pyrene. Similarly, non-carcinogenic PAHs not listed in the PSRG Table are screened using the remediation goal for pyrene, as directed in the REC Program Implementation Guidance. For lead screening, the average detected concentration was compared to the applicable screening value(s) since lead is not evaluated in the same manner as the other COPCs, but is regulated by USEPA based on blood-lead uptake using a physiologically based pharmacokinetic model called the Integrated Exposure Uptake Biokinetic Model, which is based on arithmetic average concentrations and exposure parameters.

The health-based PSRGs can be used as final health-based remediation goals; however, under certain site conditions the PSRGs maybe be adjusted. While the health-based PSRGs for carcinogens for each constituent are based on a cancer risk of 1×10^{-6}, the cumulative acceptable cancer risk range is 10^{-4} to 10^{-6}. Therefore, the health-based remediation goals for carcinogens can be adjusted as shown below (from the REC Program Implementation Guidance) to a cumulative cancer risk of 10^{-4} from exposure to all detected constituents (meaning that when summing up the risks associated with exposure to all of the detected carcinogens, the cancer risk would not exceed 10^{-4}).

Adjustment for SRGs based on cancer:

$$\text{Adjusted SRG} = \text{PSRG} \times 100/\text{number of carcinogens detected in soil}$$

The health-based PSRGs for non-carcinogens are based on a hazard quotient of 0.2 to account for multiple (average of five) non-carcinogens in the same critical effect group. Therefore, for sites with less than five-non-carcinogens in a critical effect group, the remediation goals may be adjusted as shown below.

Adjustment for SRGs based on non-cancer:

$$\text{Adjusted SRG} = \text{PSRG} \times 5/\text{number of non-carcinogens in critical effect group}$$

If a constituent has both carcinogenic and non-carcinogenic effects, the adjusted health-based remediation goals are determined for both health effects, and the lower of the two concentrations is selected as the adjusted remediation goal. Per REC Program Implementation Guidance, the remediation goals for PCBs have not been adjusted.

Tables 20 through **23** present a summary of the COPCs for the 2nd Street Disposal Area and 5th Street Disposal Area by media, whether each COPC is a carcinogen or non-carcinogen, the target organs, the PSRG, and the adjusted SRG. **Tables 24** and **25** summarize the soil COPCs and adjusted SRGs for the 2nd Street Disposal Area and 5th Street Disposal Area, respectively. For metals whose maximum background concentrations exceed the regulatory limit, the adjusted SRG values are the maximum background concentration rather than the regulatory standard due to the metal being naturally present. Both residential and industrial values have been calculated pending HPDTA input on long-term land use.

5.2 Protection of Groundwater Soil Remediation Goals

The protection of groundwater PSRGs can be adjusted using site-specific data for soil, the bulk density and organic carbon content of the soil, to refine the PSRG. If the site will be remediated to unrestricted use health-based SRGs, meeting the protection of groundwater remediation goals may be demonstrated by: on-site disposal and releases of hazardous substances having occurred over 15 years ago and groundwater monitoring demonstrates that the constituents of concern and any daughter products in groundwater are below the groundwater remediation goals. Disposal operations ended at the Towers Road Disposal Areas in the early 1980s, nearly 30 years ago; therefore, site-specific soil and groundwater have been evaluated to determine whether or not the protection of groundwater SRGs are applicable. The protection of groundwater SRGs are considered not applicable for soil COPCs that are not also groundwater COPCs. **Tables 24** and **25** summarize the soil COPCs and whether or not the protection of groundwater SRG is applicable; if it is applicable, the protection of groundwater SRG is provided. For metals whose maximum background concentration exceed the regulatory limit, the protection of groundwater SRG values are the maximum background concentration rather than the regulatory standard due to the metal being naturally present.

SECTION 6

Conclusions and Recommendations

The Phase I RI was conducted to identify waste disposal areas, characterize the chemical nature of releases/disposal activities, and to collect sufficient data to establish preliminary remediation goals.

6.1 Conclusions

2nd Street Disposal Area

The potential source of site contamination is from historical trash disposal activities and the current nature and extent of contamination consist of trash from the disposal activities and select VOCs, SVOCs, PCBs, and metals in surface soil, subsurface soil, and/or groundwater (**Table 7**). The SRGs for soil COPCs and the regulatory standards for groundwater COPCs are shown in **Table 24**.

Based on the results of the geophysical survey and test pitting activities, the extent of waste at the 2nd Street Disposal Area covers approximately 0.7 acre. Debris consisted of both metallic and non-metallic materials including, but not limited to, metal pipes, scrap metal, bottles, brick, and logs. The highest concentrations of constituents in soil were generally detected in samples collected within the extent of waste and included SVOCs, PCBs, and metals in soil and VOCs and metals in groundwater. The primary fate and transport mechanisms consist of the potential for leaching of constituents from buried wastes to soil, infiltration through the vadose zone to groundwater, and dissolved constituent migration downgradient with groundwater flow (advection).

Based on the current and recently anticipated future land use, adult visitors are the only expected human receptors for the 2nd Street Disposal Area. However, for conservativeness unlimited use and unrestricted exposure was evaluated and exposure to waste and constituents in soil and groundwater have been identified as potential concerns. There are currently no buildings on or within 100 feet of the 2nd Street Disposal Area; therefore, vapor intrusion is not a currently complete exposure pathway and an evaluation of subsurface vapor intrusion is not required by the REC Program Implementation Guidance. Due to the lack of sensitive environmental areas and the fact that site drainage is not anticipated to enter the nearby wetlands there are no ecological receptors of concern at the 2nd Street Disposal Area and an ecological risk assessment is not warranted.

The geophysical surveys did not identify any potential waste/debris areas and the test pits did not contain any debris in the portion of the 2nd Street Disposal Area investigation area south of Flat Run Road. Metals were detected in surface and subsurface soil but were at concentrations similar to background and therefore, most likely naturally occurring. Only one SVOC was detected in groundwater at a concentration exceeding the regulatory standard; however, it is a common laboratory contaminant. There appears to be no evidence of disposal operations or contamination within the area south of Flat Run Road.

5th Street Disposal Area

The potential source of site contamination is from historical trash disposal activities and the current nature and extent of contamination consist of trash from the disposal activities and select VOCs, SVOCs, PCBs, and metals in surface soil, subsurface soil, and/or groundwater (**Table 10**). The SRGs for soil COPCs and the regulatory standards for groundwater COPCs are shown in **Table 25**.

Based on the results of the geophysical survey and test pitting activities, the extent of waste at the 5th Street Disposal Area covers approximately 0.6 acre. Debris consisted of both metallic and non-metallic materials including, but not limited to, metal pipes, scrap metal, bottles, brick, and logs. The highest concentrations of constituents in soil and groundwater were generally detected in samples collected within the extent of waste identified during the geophysical surveys and included SVOCs, PCBs, and

metals in soil and VOCs and metals in groundwater. The primary fate and transport mechanisms consist of the potential for leaching of constituents from buried wastes to soil, infiltration through the vadose zone to groundwater, and dissolved constituent migration downgradient with groundwater flow (advection).

Based on the current and recently anticipated future land use, adult visitors are the only expected human receptors for the 5th Street Disposal Area. However, for conservativeness unlimited use and unrestricted exposure was evaluated and exposure to waste and constituents in soil and groundwater have been identified as potential concerns. There are currently no buildings on or within 100 feet of the 5th Street Disposal Area; therefore, vapor intrusion is not a currently complete exposure pathway and an evaluation of subsurface vapor intrusion is not required by the REC Program Implementation Guidance. Due to the lack of sensitive environmental areas and the fact that site drainage is not anticipated to enter the nearby wetlands there are no ecological receptors of concern at the 5th Street Disposal Area and an ecological risk assessment is not warranted.

Based on information from the facility, the concrete pad on the north side of the 5th Street Disposal Area was used to test typical breaching activities. Breaching activities are typically the act of breaking down a door or entrance that has been locked or blocked in some manner. Mock ups of the items to be breached were constructed and then various explosive charges were used to see how the mock ups functioned/performed. The mock up materials were discarded and others mock up materials brought in to replace them for more testing. The typical explosives used for the detonations include C4.

The geophysical surveys did not identify any potential waste/debris areas and the test pits did not contain any debris in the portion of the 5th Street Disposal Area investigation area south of Flat Run Road. Metals were detected in surface and subsurface soil but were at concentrations similar to background and, therefore, most likely naturally occurring. Only one SVOC was detected in groundwater at a concentration exceeding the regulatory standard; however, it is a common laboratory contaminant. Several SVOCs were detected in surface soil in the portion of the investigation area south of Flat Run Road; however, because the detections are limited to surface soil and there are no signs of disposal operations in the area, the SVOCs (PAHs) are likely the result of other anthropogenic sources.

6.2 Recommendations

Based on the results of the Phase I RI, a Phase II RI for soil and groundwater and an interim remedial action to address waste and soil are recommended. The following recommendations should be considered for the Phase II RI and interim remedial action:

- Collect soil and groundwater samples at the Phase I RI background sample locations for PAHs analysis to evaluate whether the PAHs detected are a result of the disposal activities or anthropogenic sources.
- Collect soil samples for COPC analysis to further delineate the extent of soil contamination.
- Complete an interim remedial action to remove the waste and associated soil and dispose of it off site to prevent contaminant migration.
- Following the interim remedial action excavation, collect floor and wall soil samples for COPCs analysis to provide confirmation that the interim remedial action achieved its objectives.
- Collect grab groundwater samples to delineate the horizontal extent of groundwater VOCs contamination; install additional downgradient and upgradient monitoring wells and collect groundwater samples for COPCs analysis; and collect semi-annual groundwater elevation data through the remainder of the RI phase.

- Include analysis of explosives residues at the 5th Street Disposal Area based on evidence from the facility that detonations were performed on the concrete paved area on the north side of Flat Run Road.
- Remove the area south of Flat Run Road at the 2nd Street Disposal Area from further investigation because there were no signs of disposal operations or contamination.

SECTION 7

References

This Section lists the documents consulted in the preparation of this report; not all texts included herein are specifically cited in the text.

ATS, 2011a. *Geophysical Survey for the Second Street Trash Site, Harvey Point Defense Testing Activity, Hertford, North Carolina*. November.

ATS, 2011b. *Geophysical Survey for the Fifth Street Trash Site, Harvey Point Defense Testing Activity, Hertford, North Carolina*. November.

CH2M HILL. 2013. *Final Remedial Investigation Work Plan, Towers Road Disposal Areas, Harvey Point Defense Testing Activity, Hertford, North Carolina*. April.

CH2M HILL. 2013. *Final Remedial Investigation Work Plan Addendum, Towers Road Disposal Areas, Harvey Point Defense Testing Activity, Hertford, North Carolina*. May

HPDTA, 2007. 2007. *Integrated Natural Resources Management Plan, Harvey Point Defense Testing Activity, Hertford, North Carolina*. May

McNeill, J.D. 1980. *Electromagnetic Terrain Conductivity Measurement at Low Induction Numbers*. Geonics, Ltd. Technical Note TN-6.

NCDENR, 2013. *Registered Environmental Consultant Program Implementation Guidance.* December.

OHM, 1997. *Contractor's Closeout Report for Remediation of PCB-Contaminated Soil at Range Areas A, B and D, Harvey Point Defense Testing Activity, Hertford, North Carolina*. May

Pyramid Environmental & Engineering (PEE), P.C. 1999. *Comprehensive Site Assessment Report, Department of Defense, HPDTA – Building 3-1, 2835 Harvey Point Road, Hertford, Perquimans County, NC.* September.

Tables

TABLE 1

Crosswalk to Required Information

Towers Road Disposal Areas Phase I RI Report

Harvey Point Defense Testing Activity

Hertford, North Carolina

REC Program Rules	Required Information	Location in this RI Report
15A NCAC 13C .0306(h)(1)	Description of Investigation including work plan variances	Section 2
15A NCAC 13C .0306(h)(2)	Groundwater monitoring well design and installation procedures	Section 2.4 and Attachment B
15A NCAC 13C .0306(h)(3)	Monitoring well and sample locations	Figures 4
15A NCAC 13C .0306(h)(4)	Field and laboratory QA/QC	Section 2.8
15A NCAC 13C .0306(h)(5)	Management of investigation-derived waste	Section 2.6
15A NCAC 13C .0306(h)(6)	Site geologic conditions	Section 4.3
15A NCAC 13C .0306(h)(7)	Site hydrogeologic conditions	Section 4.3
15A NCAC 13C .0306(h)(8)	Sample analytical results	Tables 4 through 9 and Attachment F
15A NCAC 13C .0306(h)(9)	Sample results figures and cross sections	Figures 6 through 10 and 13
15A NCAC 13C .0306(h)(10)	Procudures and results of special assessments (i.e., geophysical survey and test pitting)	Sections 3.1 and 3.2; Figures 4, 6, and 7; Attachments D and E
15A NCAC 13C .0306(h)(11)	Color copies of site photographs	Attachment A

TABLE 2

Monitoring Well Construction Details

Towers Road Disposal Areas Phase I RI Report

Harvey Point Defense Testing Activity

Hertford, North Carolina

Well Number	Date Installed	Well Type	Top of PVC Casing Elevation	Ground Surface Elevation	Boring Total Depth	Total Well Depth	Depth to Screen Interval	Top of Screen Interval Elevation	Bottom of Screen Interval Elevation	Depth to Top of Sand Pack	Depth to Top of Bentonite
			(ft msl)	(ft msl)	(ft bgs)	(ft bgs)	(ft bgs)	(ft msl)	(ft msl)	(ft bgs)	(ft bgs)
TR-2ND-MW01	06/11/2013	Flushmount	6.14	6.29	28	27.00	7.00	-0.71	-20.71	5.00	2.00
TR-2ND-MW02	04/01/2010	Flushmount	5.76	6.06	28	27.00	7.00	-0.94	-20.94	5.00	2.00
TR-5TH-MW01	03/30/2010	Flushmount	6.78	6.94	28	27.00	7.00	-0.06	-20.06	5.00	2.00
TR-5TH-MW02	03/30/2010	Stickup	8.87	6.01	28	27.00	7.00	-0.99	-20.99	5.00	2.00
HPDTA-BG-MW01	03/31/2010	Flushmount	6.62	6.93	28	27.00	7.00	-0.07	-20.07	5.00	2.00
HPDTA-BG-MW02	04/08/2010	Flushmount	5.68	N/M	28	27.00	7.00	-0.94	-20.94	5.00	2.00
HPDTA-BG-MW03	04/08/2010	Flushmount	6.08	6.30	28	27.00	7.00	-0.70	-20.70	5.00	2.00
HPDTA-BG-MW04	04/08/2010	Flushmount	5.92	6.29	28	27.00	7.00	-0.71	-20.71	5.00	2.00

Notes:

Well screens are 20 ft in length

ft - feet

bgs - below ground surface

N/M - not measured

msl - mean sea level

TABLE 3

Summary of Water Level Measurements

Towers Road Disposal Areas Phase I RI Report

Harvey Point Defense Testing Activity

Hertford, North Carolina

Well ID	Date	TOC Elevation (ft above msl)	Total Well Depth* (ft BTOC)	Measured Total Well Depth (ft BTOC)	Depth to Water (ft BTOC)	Groundwater Elevation** (ft above msl)
TR-2ND-MW01	06/20/2013	6.43	27.00	27.11	5.10	1.33
TR-2ND-MW02	06/20/2013	6.17	27.00	26.91	4.66	1.51
TR-5TH-MW01	06/20/2013	7.00	27.00	27.12	5.42	1.58
TR-5TH-MW02	06/20/2013	8.73	30.00	29.88	7.42	1.31
HPDTA-BG-MW01	06/20/2013	6.99	27.00	26.95	5.34	1.65
HPDTA-BG-MW02	06/20/2013	6.06	27.00	26.97	4.83	1.23
HPDTA-BG-MW03	06/20/2013	6.48	27.00	26.75	4.82	1.66
HPDTA-BG-MW04	06/20/2013	6.32	27.00	26.76	4.62	1.70

Notes:

*Depth of well based on drilling construction logs

**Groundwater Elevation = TOC Elevation - Depth to Water

msl - mean sea level

BTOC - below top of casing

ft - feet

TOC - top of casing

TABLE 4

Background Soil Results

Towers Road Disposal Areas Phase I RI Report

Harvey Point Defense Testing Activity

Hertford, North Carolina

Sample ID	Minimum Detected Concentration	Maximum Detected Concentration	HPDTA-BG-SS01-0613	HPDTA-BG-SS02-0613	HPDTA-BG-SS03-0613	HPDTA-BG-SS04-0613	HPDTA-BG-SS05-0613	HPDTA-BG-SB01-0.5-01-0613	HPDTA-BG-SB01-04-06-0613
Sample Date			6/10/13	6/12/13	6/12/13	6/12/13	6/12/13	6/12/13	6/12/13
Sample Depth (ft bgs)			0.5 - 1	0.5 - 1	0.5 - 1	0.5 - 1	0.5 - 1	0.5 - 1	4 - 6
Chemical Name									
Total Metals (MG/KG)									
Aluminum	951	32,000	9,090	16,500	14,200	20,800	5,070	6,990	18,100
Antimony	NA	NA	2.1 U	1.57 U	1.62 U	1.23 U	1.49 U	1.45 U	1.73 U
Arsenic	1.2	3.74	3.46 J	2.24 J	2.75 J	3.59	1.83 J	2.4 J	3.74
Barium	3.08	134	89.9	71.4	65.6	133	47.2	43.3	51.9
Beryllium	0.064	0.636	0.404	0.406	0.321	0.636	0.208	0.268	0.374
Cadmium	0.039	0.878	0.878	0.0787 U	0.081 U	0.0613 U	0.115 J	0.483	0.0865 U
Calcium	158	3,600	3,600	1,810	886	1,320	1,720	1,390	1,020
Chromium	3.77	38.5	14	21.9	17.7	26.5	8.1	11	22.9
Chromium (hexavalent)	0.85	2.11	NS	NS	2.11	NS	NS	NS	NS
Cobalt	0.328	4.64	3.07	3	3.04	4.21	1.53	1.96	3.21
Copper	0.604	441	441	5.38	4.82	7.24	6.01	21.6	8.35
Iron	1,680	14,100	6,450	8,140	8,680	10,100	3,680	5,120	8,500
Lead	1.53	47.9	47.9	8.09	6.13	11.3	23.4	46.5	6.02
Magnesium	103	2,600	1,200	1,520	1,120	1,400	629	725	2,120
Manganese	7.98	412	388	108	315	412	175	98.4	67.8
Mercury	0.006	0.037	NS	NS	0.019	NS	NS	NS	NS
Nickel	0.645	16.8	7.78	9.49	7.38	10.5	3.5	5.59	10.7
Potassium	87.5	765	389	450	317	438	233	268	717
Selenium	NA	NA	2.1 U	1.57 U	1.62 U	1.23 U	1.49 U	1.45 U	1.73 U
Silver	NA	NA	0.524 U	0.393 U	0.405 U	0.306 U	0.372 U	0.362 U	0.432 U
Sodium	8.36	136	38.7 J	55.1	83.8	56.2	24.3 J	24.9 J	59
Thallium	0.314	1.29	2.1 U	0.493 J	1.62 U	1.23 U	1.49 U	1.45 U	0.473 J
Vanadium	4.51	31.9	12	19.8	16.6	21.7	8.21	9.96	20.2
Zinc	2.5	87.3	87.3	19.8	13	17.1	22.5	60.7	18.8

Notes:

[1] Values are from the Inactive Hazardous Sites Branch Preliminary Soil Remediation Goals (PSRG) Table (NC DENR, July 2013).

Shading indicates detection

bgs - below ground surface

J - Analyte present below the reporting limit

MG/KG - Milligrams per kilogram

NA - Not applicable/not available

NS - Not sampled

U - The material was analyzed for, but not detected

TABLE 4

Background Soil Results

Towers Road Disposal Areas Phase I RI Report

Harvey Point Defense Testing Activity

Hertford, North Carolina

Sample ID	Minimum Detected Concentration	Maximum Detected Concentration	HPDTA-BG-SB02-0.5-01-0613	HPDTA-BG-SB02-03-05-0613	HPDTA-BG-SB03-0.5-01-0613	HPDTA-BG-SB03-04-06-0613	HPDTA-BG-SB04-0.5-01-0613	HPDTA-BG-SB04-03-05-0613
Sample Date			**6/13/13**	**6/13/13**	**6/19/13**	**6/19/13**	**6/19/13**	**6/19/13**
Sample Depth (ft bgs)			**0.5 - 1**	**3 - 5**	**0.5 - 1**	**4 - 6**	**0.5 - 1**	**3 - 5**
Chemical Name								
Total Metals (MG/KG)								
Aluminum	951	32,000	4,570	22,700	8,420	19,400	32,000	14,800
Antimony	NA	NA	1.93 U	1.49 U	1.44 U	1.77 U	1.72 U	1.61 U
Arsenic	1.2	3.74	3.44 J	3.12	2.05 J	2.65 J	2.6 J	3.09 J
Barium	3.08	134	7.89	65.3	41.7	53.5	134	45.2
Beryllium	0.064	0.636	0.115	0.45	0.275	0.44	0.593	0.338
Cadmium	0.039	0.878	0.0967 U	0.0744 U	0.0722 U	0.0884 U	0.0862 U	0.0803 U
Calcium	158	3,600	627	454	722	535	1,630	576
Chromium	3.77	38.5	7.94	29	12.6	23.7	38.5	20.9
Chromium (hexavalent)	0.85	2.11	NS	1.48	0.85	1.07	NS	NS
Cobalt	0.328	4.64	0.328 J	3.68	2	3.36	4.64	3.14
Copper	0.604	441	1.44	9.14	3.55	5.49	8.08	6.68
Iron	1,680	14,100	7,390	9,790	6,240	9,350	14,100	8,210
Lead	1.53	47.9	4.09	6.67	7.97	6.58	12.2	4.67
Magnesium	103	2,600	184	2,310	861	2,090	2,600	2,370
Manganese	7.98	412	7.98	69.7	131	70.9	114	66.2
Mercury	0.006	0.037	NS	0.00609 J	0.0281	0.00623 U	0.0366	0.00571 J
Nickel	0.645	16.8	0.69 J	12.1	4.94	10.4	16.8	10.4
Potassium	87.5	765	265	676	219	614	765	725
Selenium	NA	NA	1.93 U	1.49 U	1.44 U	1.77 U	1.72 U	1.61 U
Silver	NA	NA	0.483 U	0.372 U	0.361 U	0.442 U	0.431 U	0.401 U
Sodium	8.36	136	8.36 J	102	63.2	136	75	76.8
Thallium	0.314	1.29	1.93 U	1.49 U	1.44 U	0.519 J	1.29 J	0.489 J
Vanadium	4.51	31.9	12.5	26.6	13.6	23.5	31.9	21.4
Zinc	2.5	87.3	4.34	22.1	12.4	21.4	27.1	19.6

Notes:

[1] Values are from the Inactive Hazardous Sites Branch Preliminary Soil Remediation Goals (PSRG) Table (NC DENR, July 2013).

Shading indicates detection

bgs - below ground surface

J - Analyte present below the reporting limit

MG/KG - Milligrams per kilogram

NA - Not applicable/not available

NS - Not sampled

U - The material was analyzed for, but not detected

TABLE 4

Background Soil Results

Towers Road Disposal Areas Phase I RI Report

Harvey Point Defense Testing Activity

Hertford, North Carolina

Sample ID	Minimum Detected Concentration	Maximum Detected Concentration	HPDTA-BG-SB05-0.5-01-0613	HPDTA-BG-SB05-06-08-0613
Sample Date			6/18/13	6/18/13
Sample Depth (ft bgs)			0.5 - 1	6 - 8
Chemical Name				
Total Metals (MG/KG)				
Aluminum	951	32,000	11,400	951
Antimony	NA	NA	1.11 U	1.57 U
Arsenic	1.2	3.74	1.83 J	1.2 J
Barium	3.08	134	49.9	3.08
Beryllium	0.064	0.636	0.291	0.0642 J
Cadmium	0.039	0.878	0.0557 U	0.0389 J
Calcium	158	3,600	810	158
Chromium	3.77	38.5	15	3.77
Chromium (hexavalent)	0.85	2.11	NS	NS
Cobalt	0.328	4.64	1.92	0.538 J
Copper	0.604	441	3.78	0.604 J
Iron	1,680	14,100	5,730	1,680
Lead	1.53	47.9	6.93	1.53 J
Magnesium	103	2,600	945	103
Manganese	7.98	412	94.2	12.7
Mercury	0.006	0.037	NS	NS
Nickel	0.645	16.8	6.14	0.645 J
Potassium	87.5	765	300	87.5
Selenium	NA	NA	1.11 U	1.57 U
Silver	NA	NA	0.279 U	0.393 U
Sodium	8.36	136	32.9	8.81 J
Thallium	0.314	1.29	0.314 J	1.57 U
Vanadium	4.51	31.9	13.7	4.51
Zinc	2.5	87.3	11.4	2.5

Notes:

[1] Values are from the Inactive Hazardous Sites Branch Preliminary Soil Remediation Goals (PSRG) Table (NC DENR, July 2013).

Shading indicates detection

bgs - below ground surface

J - Analyte present below the reporting limit

MG/KG - Milligrams per kilogram

NA - Not applicable/not available

NS - Not sampled

U - The material was analyzed for, but not detected

TABLE 5

Surface Soil Results and Exceedances - 2nd Street Disposal Area

Towers Road Disposal Areas Phase I RI Report

Harvey Point Defense Testing Activity

Hertford, North Carolina

Sample ID	Background Value[1]	Protection of Groundwater SRG[2]	Residential Health-Based PSRG[2]	Industrial Health-Based PSRG[2]	Detection Frequency	TR-2ND-SS01-0613	TR-2ND-SS02-0613	TR-2ND-SS03-0613*	TR-2ND-SS04-0613	TR-2ND-SS05-0613
Sample Date						6/11/13	6/11/13	6/11/13	6/11/13	6/11/13
Sample Depth (feet bgs)[3]						0.0-0.5/0.5-1	0.0-0.5/0.5-1	0.0-0.5/0.5-1	0.0-0.5/0.5-1	0.0-0.5/0.5-1
Chemical Name										
Volatile Organic Compounds (mg/kg)										
Acetone	NA	24	12,000	100,000	1/5	0.016 U	0.016 U	0.012 U	0.018 U	0.012 J
Semivolatile Organic Compounds (mg/kg)										
2-Methylnaphthalene	NA	1.6	46	370	2 / 5	0.023 J	0.032 U	0.023 J	0.031 U	0.029 U
Acenaphthene	NA	8.4	680	6,600	3 / 5	0.035 J	0.042 J	0.033 J	0.031 U	0.029 U
Acenaphthylene	NA	21	340	3,400	4 / 5	0.048	0.19	0.043 J	0.027 J	0.029 U
Anthracene	NA	660	3,400	34,000	4 / 5	0.04 J	0.2	0.04 J	0.032 J	0.029 U
Benzo(a)anthracene	NA	0.18	0.15	2.1	4 / 5	0.08	**0.65**	0.065	0.074	0.029 U
Benzo(a)pyrene	NA	0.059	0.015	0.21	4 / 5	**0.08**	**0.54**	**0.063**	**0.076**	0.029 U
Benzo(b)fluoranthene	NA	0.6	0.15	2.1	4 / 5	0.11	**0.88**	0.083	0.14	0.029 U
Benzo(g,h,i)perylene	NA	7,800	340	3,400	4 / 5	0.048	0.3	0.048	0.052	0.029 U
Benzo(k)fluoranthene	NA	5.9	1.5	21	4 / 5	0.073	0.41	0.058	0.071	0.029 U
bis(2-Ethylhexyl)phthalate	NA	7.2	35	120	1 / 5	0.13 U	0.26 UD	0.13 U	0.11 J	0.12 U
Chrysene	NA	18	15	210	4 / 5	0.085	0.66	0.07	0.084	0.029 U
Dibenz(a,h)anthracene	NA	0.19	0.015	0.21	2 / 5	0.032 U	**0.083**	**0.023 J**	0.031 U	0.029 U
Fluoranthene	NA	330	460	4,400	4 / 5	0.11	0.89	0.09	0.12	0.029 U
Fluorene	NA	56	460	4,400	3 / 5	0.028 J	0.042 J	0.028 J	0.031 U	0.029 U
Indeno(1,2,3-cd)pyrene	NA	2	0.15	2.1	4 / 5	0.04 J	**0.24**	0.035 J	0.042 J	0.029 U
Naphthalene	NA	0.21	3.6	18	3 / 5	0.038 J	0.034 J	0.033 J	0.031 U	0.029 U
Phenanthrene	NA	220	340	3,400	4 / 5	0.058	0.11	0.053	0.071	0.029 U
Pyrene	NA	220	340	3,400	4 / 5	0.11	0.98	0.095	0.12	0.029 U
Pesticide/Polychlorinated Biphenyls (mg/kg)										
Aroclor-1254	NA	0.14	1	1	4 / 5	0.025 U	0.061 Q	0.12	0.13 PQ	0.084
Aroclor-1260	NA	0.14	1	1	4 / 5	0.025 UQ	0.14	0.13	0.19	0.091

TABLE 5

Surface Soil Results and Exceedances - 2nd Street Disposal Area

Towers Road Disposal Areas Phase I RI Report

Harvey Point Defense Testing Activity

Hertford, North Carolina

Sample ID	Background Value[1]	Protection of Groundwater SRG[2]	Residential Health-Based PSRG[2]	Industrial Health-Based PSRG[2]	Detection Frequency	TR-2ND-SS01-0613	TR-2ND-SS02-0613	TR-2ND-SS03-0613*	TR-2ND-SS04-0613	TR-2ND-SS05-0613
Sample Date						6/11/13	6/11/13	6/11/13	6/11/13	6/11/13
Sample Depth (feet bgs)[3]						0.0-0.5/0.5-1	0.0-0.5/0.5-1	0.0-0.5/0.5-1	0.0-0.5/0.5-1	0.0-0.5/0.5-1
Chemical Name										
Total Metals (mg/kg)										
Aluminum	32,000	NA	15,000	100,000	5 / 5	**18,800**	12,200	10,200	11,000	11,500
Antimony	NA	0.9	6.2	82	3 / 5	1.12 U	3.49	**6.41**	**8.14**	1.58 U
Arsenic	3.74	5.8	0.61	2.4	5 / 5	**3.17**	**5.02**	**4.96**	**7.52**	**2.82 J**
Barium	134	580	3,000	38,000	5 / 5	90.4	156	332	329	68.6
Beryllium	0.64	63	32	400	5 / 5	0.363	0.323	0.258	0.288	0.455
Cadmium	0.88	3	14	160	4 / 5	0.364	6.24	3.74	3.56	0.0792 U
Calcium	3,600	NA	NA	NA	5 / 5	3,040	11,700	12,400	9,140	1,090
Chromium	38.5	360,000	24,000	100,000	5 / 5	27.1	41.6	31.5	37.9	16.9
Cobalt	4.64	0.9	4.6	60	5 / 5	3.62	**6.58**	4.21	**6.72**	2.86
Copper	441	700	620	8200	5 / 5	46.4	269	254	**639**	6.84
Iron	14,100	150	11,000	100,000	5 / 5	10,400	**25,100**	**30,000**	**28,000**	6,940
Lead	47.9	270	400	800	5 / 5	37.1	223	166	348	10.5
Magnesium	2,600	NA	NA	NA	5 / 5	1,900	1,890	1,510	1,780	1,360
Manganese	412	65	360	4600	5 / 5	142	310	319	**412**	298
Mercury	0.037	1	2	3.1	2 / 2	0.934	**3.62 D**	NS	NS	NS
Nickel	16.8	130	300	4000	5 / 5	11.2	19	12.6	36.6	7.79
Potassium	765	NA	NA	NA	5 / 5	685	631	809	774	403
Silver	NA	3.4	78	1000	4 / 5	2.48	3.81	15.6	20.5	0.396 U
Sodium	136	NA	NA	NA	5 / 5	62	91.4	72.4	188	41.4
Vanadium	31.9	6	78	1,000	5 / 5	23.1	17.6	16.2	16.1	17.2
Zinc	87.3	1,200	4,600	62,000	5 / 5	99.2	738	591	1,020	25.7

Notes:

[1] Values are from the maximum values for the background samples collected during the June 2013 sampling event.

PAHs without PSRG, the PSRG for benzo(a)pyrene was used. For non-carcinogenic PAHs without PSRG, the PSRG for pyrene was used. For PCBs, the unrestricted use residential/industrial PSRG of 1 mg/kg was used.

[3] Sample depth is 0.0 to 0.5 foot bgs for all analytes except VOCs, for which the sample depth is 0.5 to 1 foot bgs.

Underlined text indicates exceedance of the Protection of Groundwater PSRG criteria.

Bold text indicates exceedance of Residential Health-Based Preliminary Soil Remediation Goals.

Bold box indicates exceedance of Industrial Health-Based Preliminary Soil Remediation Goals.

Shading indicates detection.

Blue text indicates exceedance of maximum background value.

bgs - below ground surface

D - Compound identified in an analysis at a secondary dilution factor

J - Analyte present below the reporting limit

mg/kg - Milligrams per kilogram

NA - Not available/not applicable

NS - Not sampled

P - Indicates a greater than 25% difference of detection between the primary and secondary column.

Q - One or more quality control criteria failed

U - The material was analyzed for, but not detected

*The highest concentration of the parent sample and duplicate sample.

TABLE 6

Surface Soil COPCs - 2nd Street Disposal Area

Towers Road Disposal Areas Phase I RI Report

Harvey Point Defense Testing Activity

Hertford, North Carolina

Chemical Name	Background Value[1]	Protection of Groundwater PSRG	Residential Health-Based PSRG[2]	Industrial Health-Based PSRG[2]	Detection Frequency	Exceeds Protection of Groundwater PSRG	Exceeds Residential Health-Based PSRG	Exceeds Industrial Health-Based PSRG	Phase II COPC	Basis
Volatile Organic Compounds (mg/kg)										
Acetone	NA	24	12,000	100,000	1/5				no	CLC
Semivolatile Organic Compounds (mg/kg)										
2-Methylnaphthalene	NA	1.6	46	370	2 / 5				**yes**	D
Acenaphthene	NA	8.4	680	6,600	3 / 5				**yes**	D
Acenaphthylene	NA	21	340	3,400	4 / 5				**yes**	D
Anthracene	NA	660	3,400	34,000	4 / 5				**yes**	D
Benzo(a)anthracene	NA	0.18	0.15	2.1	4 / 5	**yes**	**yes**		**yes**	SRG
Benzo(a)pyrene	NA	0.059	0.015	0.21	4 / 5	**yes**	**yes**	**yes**	**yes**	SRG
Benzo(b)fluoranthene	NA	0.6	0.15	2.1	4 / 5	**yes**	**yes**		**yes**	SRG
Benzo(g,h,i)perylene	NA	7,800	340	3,400	4 / 5				**yes**	D
Benzo(k)fluoranthene	NA	5.9	1.5	21	4 / 5				**yes**	D
bis(2-Ethylhexyl)phthalate	NA	7.2	35	120	1 / 5				no	CLC
Chrysene	NA	18	15	210	4 / 5				**yes**	D
Dibenz(a,h)anthracene	NA	0.19	0.015	0.21	2 / 5		**yes**		**yes**	SRG
Fluoranthene	NA	330	460	4,400	4 / 5				**yes**	D
Fluorene	NA	56	460	4,400	3 / 5				**yes**	D
Indeno(1,2,3-cd)pyrene	NA	2	0.15	2.1	4 / 5		**yes**		**yes**	SRG
Naphthalene	NA	0.21	3.6	18	3 / 5				**yes**	D
Phenanthrene	NA	220	340	3,400	4 / 5				**yes**	D
Pyrene	NA	220	340	3,400	4 / 5				**yes**	D
Pesticide/Polychlorinated Biphenyls (mg/kg)										
Aroclor-1254	NA	0.14	1	1	4 / 5				**yes**	D
Aroclor-1260	NA	0.14	1	1	4 / 5	**yes**			**yes**	SRG
Total Metals (mg/kg)										
Aluminum	32,000	NA	15,000	100,000	5 / 5		**yes**		no	NRS & B
Antimony	NA	0.9	6.2	82	3 / 5	**yes**	**yes**		**yes**	SRG
Arsenic	3.74	5.8	0.61	2.4	5 / 5	**yes**	**yes**	**yes**	**yes**	SRG
Barium	134	580	3,000	38,000	5 / 5				**yes**	D
Beryllium	0.64	63	32	400	5 / 5				no	B
Cadmium	0.88	3	14	160	4 / 5	**yes**			**yes**	SRG
Calcium	3,600	NA	NA	NA	5 / 5				no	NUT
Chromium	38.5	360,000	24,000	100,000	5 / 5				**yes**	D
Cobalt	4.64	0.9	4.6	60	5 / 5	**yes**	**yes**		**yes**	SRG
Copper	441	700	620	8200	5 / 5		**yes**		**yes**	SRG
Iron	14,100	150	11,000	100,000	5 / 5	**yes**	**yes**		**yes**	SRG
Lead	47.9	270	400	800	5 / 5	**yes**			**yes**	SRG
Magnesium	2,600	NA	NA	NA	5 / 5				no	NUT
Manganese	412	65	360	4600	5 / 5	**yes**	**yes**		no	B
Mercury	0.037	1	2	3.1	2 / 2	**yes**	**yes**	**yes**	**yes**	SRG

TABLE 6

Surface Soil COPCs - 2nd Street Disposal Area

Towers Road Disposal Areas Phase I RI Report

Harvey Point Defense Testing Activity

Hertford, North Carolina

Chemical Name	Background Value[1]	Protection of Groundwater PSRG	Residential Health-Based PSRG[2]	Industrial Health-Based PSRG[2]	Detection Frequency	Exceeds Protection of Groundwater PSRG	Exceeds Residential Health-Based PSRG	Exceeds Industrial Health-Based PSRG	Phase II COPC	Basis
Nickel	16.8	130	300	4000	5 / 5				**yes**	D
Potassium	765	NA	NA	NA	5 / 5				no	NUT
Silver	NA	3.4	78	1000	4 / 5	**yes**			**yes**	SRG
Sodium	136	NA	NA	NA	5 / 5				no	NUT
Vanadium	31.9	6	78	1,000	5 / 5				no	B
Zinc	87.3	1,200	4,600	62,000	5 / 5				**yes**	D

Notes:

[1] Values are from the maximum values for the background samples collected during the June 2013 sampling event.

[2] Values are from the Inactive Hazardous Sites Branch Preliminary Soil Remediation Goals (PSRG) Table (NC DENR, July 2013). For carcinogenic PAHs without PSRG, the PSRG for benzo(a)pyrene was used. For non-carcinogenic PAHs without PSRG, the PSRG for pyrene was used. For PCBs, the unrestricted use residential/industrial PSRG of 1 mg/kg was used.

[3]Basis:

B - Chemical was detected but is within background range

CLC - Chemical was detected but is a common laboratory contaminant detected below the regulatory standard

D - Chemical was detected outside of the background range (if applicable) and is not a common laboratory contaminant.

NRS - Chemical was detected but has no regulatory standard.

NUT - Chemical was detected but is a human nutrient with no regulatory standard

SRG - Chemical exceeds the NC Protection of Groundwater PSRG or a Health-Based Preliminary PSRG and, if applicable, is outside of background range

COPC

Exceeds a PSRG

mg/kg - Milligrams per kilogram

NA - Not available/not applicable

[3]Basis:

B - Chemical was detected but is with background range

CLC - Chemical was detected but is a common laboratory contaminant detected below the regulatory standard

D - Chemical was detected outside of the background range (if applicable) and is not a common laboratory contaminant.

NRS - Chemical was detected but has no regulatory standard.

NUT - Chemical was detected but is a human nutrient with no regulatory standard

SRG - Chemical exceeds the NC Protection of Groundwater SRG or a Health-Based Preliminary SRG and, if applicable, is outside of background range

TABLE 7

Summary of COPCs - 2nd Street Disposal Area

Towers Road Disposal Areas Phase I RI Report

Harvey Point Defense Testing Activity

Hertford, North Carolina

Media	Contaminants of Potential Concern
Surface Soil	**SVOCs**
	2-Methylnaphthalene
	Acenaphthene
	Acenaphthylene
	Anthracene
	Benzo(a)anthracene
	Benzo(a)pyrene
	Benzo(b)fluoranthene
	Benzo(g,h,i)perylene
	Benzo(k)fluoranthene
	Chrysene
	Dibenz(a,h)anthracene
	Fluoranthene
	Fluorene
	Indeno(1,2,3-cd)pyrene
	Naphthalene
	Phenanthrene
	Pyrene
	PCBs
	Aroclor-1254
	Aroclor-1260
	Metals
	Antimony
	Arsenic
	Barium
	Cadmium
	Chromium
	Cobalt
	Copper
	Iron
	Lead
	Mercury
	Nickel
	Silver
	Zinc
Subsurface Soil	**VOCs**
	Benzene
	Bromomethane
	Chloroform
	Chloromethane
	Dichlorodifluoromethane (Freon-12)
	Ethylbenzene
	Isopropylbenzene
	m- and p-Xylene
	o-Xylene
	Styrene
	Toluene
	Trichlorofluoromethane (Freon-11)
	Xylene, total
	SVOCs
	2-Methylnaphthalene
	Acenaphthene
	Acenaphthylene
	Anthracene
	Benzo(a)anthracene
	Benzo(a)pyrene

TABLE 7

Summary of COPCs - 2nd Street Disposal Area

Towers Road Disposal Areas Phase I RI Report

Harvey Point Defense Testing Activity

Hertford, North Carolina

Media	Contaminants of Potential Concern
Subsurface Soil (cont.)	Benzo(b)fluoranthene
	Benzo(g,h,i)perylene
	Benzo(k)fluoranthene
	Chrysene
	Dibenz(a,h)anthracene
	Dibenzofuran
	Fluoranthene
	Fluorene
	Indeno(1,2,3-cd)pyrene
	Naphthalene
	Phenanthrene
	Pyrene
	PCBs
	Aroclor-1254
	Aroclor-1260
	Metals
	Antimony
	Arsenic
	Barium
	Cadmium
	Chromium
	Cobalt
	Iron
	Lead
	Manganese
	Mercury
	Nickel
	Silver
	Vanadium
	Zinc
Groundwater	**VOCs**
	1,1,2-Trichloro-1,2,2-trifluoroethane (Freon-113)
	1,1-Dichloroethane
	1,2,3-Trichlorobenzene
	1,2,4-Trichlorobenzene
	Dichlorodifluoromethane (Freon-12)
	Isopropylbenzene
	Methyl-tert-butyl ether (MTBE)
	Tetrachloroethene
	Trichlorofluoromethane (Freon-11)
	Vinyl Chloride
	SVOCs
	bis(2-Ethylhexyl)phthalate
	Metals
	Antimony
	Arsenic
	Cobalt
	Manganese
	Zinc

TABLE 8

Surface Soil Results and Exceedances - 5th Street

Towers Road Disposal Areas Phase I RI Report

Harvey Point Defense Testing Activity

Hertford, North Carolina

Sample ID	Background Value[1]	Protection of Groundwater PSRG[2]	Residential Health-Based PSRG[2]	Industrial Health-Based PSRG[2]	Detection Frequency	TR-5TH-SS01-0613	TR-5TH-SS02-0613	TR-5TH-SS03-0613	TR-5TH-SS04-0613	TR-5TH-SS05-0613*
Sample Date						6/10/13	6/10/13	6/10/13	6/10/13	6/10/13
Sample Depth (feet bgs)[3]						0.0-0.5/0.5-1	0.0-0.5/0.5-1	0.0-0.5/0.5-1	0.0-0.5/0.5-1	0.0-0.5/0.5-1
Chemical Name										
Volatile Organic Compounds (mg/kg)										
Benzene	NA	0.0073	1.1	5.4	1 / 5	0.001 U	0.0013 U	7.00E-04 J	0.0011 U	0.001 U
Styrene	NA	0.92	870	870	1 / 5	0.001 U	0.0013 U	4.00E-04 J	0.0011 U	0.001 U
Semivolatile Organic Compounds (mg/kg)										
Acenaphthene	NA	8.4	680	6,600	1 / 5	0.03 U	0.032 U	0.03 U	0.031 U	0.087
Acenaphthylene	NA	21	340	3,400	1 / 5	0.03 U	0.032 U	0.03 U	0.031 U	0.034 J
Anthracene	NA	660	3,400	34,000	1 / 5	0.03 U	0.032 U	0.03 U	0.031 U	0.53
Benzo(a)anthracene	NA	0.18	0.15	2.1	4 / 5	0.03 U	0.07	0.031 J	0.017 J	**1.8**
Benzo(a)pyrene	NA	0.059	0.015	0.21	3 / 5	0.03 U	**0.12**	**0.029 J**	0.031 U	**1**
Benzo(b)fluoranthene	NA	0.6	0.15	2.1	4 / 5	0.03 U	**0.24**	0.067	0.027 J	**1.4**
Benzo(g,h,i)perylene	NA	7,800	340	3,400	2 / 5	0.03 U	0.075	0.03 U	0.031 U	0.33
Benzo(k)fluoranthene	NA	5.9	1.5	21	3 / 5	0.03 U	0.13	0.038 J	0.031 U	0.69
bis(2-Ethylhexyl)phthalate	NA	7.2	35	120	1 / 5	0.12 U	0.13 U	0.12 U	0.12 U	0.18 J
Carbazole	NA	0.37	NA	NA	1 / 5	0.12 U	0.13 U	0.12 U	0.76	0.11 U
Chrysene	NA	18	15	210	4 / 5	0.03 U	0.1	0.043	0.022 J	1.6
Dibenz(a,h)anthracene	NA	0.19	0.015	0.21	1 / 5	0.03 U	0.032 U	0.03 U	0.031 U	**0.094**
Dibenzofuran	NA	5.2	16	170	1 / 5	0.12 U	0.13 U	0.12 U	0.45	0.11 U
Fluoranthene	NA	330	460	4,400	4 / 5	0.03 U	0.07	0.048	0.032 J	3.4
Fluorene	NA	56	460	4,400	1 / 5	0.03 U	0.032 U	0.03 U	0.031 U	0.14
Indeno(1,2,3-cd)pyrene	NA	2	0.15	2.1	2 / 5	0.03 U	0.032 U	0.03 U	0.031 U	**0.29**
Phenanthrene	NA	220	340	3,400	2 / 5	0.03 U	0.032 U	0.033 J	0.031 U	1.9
Pyrene	NA	220	340	3,400	4 / 5	0.03 U	0.085	0.048	0.027 J	2.8
Pesticide/Polychlorinated Biphenyls (mg/kg)										
Aroclor-1254	NA	0.14	1	1	5 / 5	0.36 D	0.32 D	**2.8 D**	0.15 Q	0.31 DPQ
Aroclor-1260	NA	0.14	1	1	5 / 5	0.45 D	0.3 D	**5.2 D**	0.33	0.62 D
Total Metals (mg/kg)										
Aluminum	32,000	NA	15,000	100,000	5 / 5	11,900	**16,100**	10,500	8,140	4,550
Antimony	NA	0.9	6.2	82	1 / 5	1.8 U	1.93 U	0.785 J	1.53 U	1.36 U
Arsenic	3.74	5.8	0.61	2.4	5 / 5	**5.28**	**2.53 J**	**2.94 J**	**2.26 J**	**1.74 J**
Barium	134	580	3,000	38,000	5 / 5	93	80.3	78.9	50.2	30.3
Beryllium	0.64	63	32	400	5 / 5	0.373	0.383	0.327	0.246	0.177
Cadmium	0.88	3	14	160	5 / 5	1.25	1.23	1.73	1.02	0.285
Calcium	3,600	NA	NA	NA	5 / 5	1,860	1,510	1,360	1,190	1,060
Chromium	38.5	360,000	24,000	100,000	5 / 5	28.1	32.9	18.6	13.4	7.53
Chromium (hexavalent)	2.11	3.8	0.29	5.6	1 / 1	NS	NS	**1.05**	NS	NS
Cobalt	4.64	0.9	4.6	60	5 / 5	4.47	4.06	3.59	2.13	1.64
Copper	441	700	620	8,200	5 / 5	69.4	60.8	123	28.1	12.9
Iron	14,100	150	11,000	100,000	5 / 5	**17,500**	**11,300**	**11,100**	6,240	4,190
Lead	47.9	270	400	800	5 / 5	127	180	164	107	23.8

TABLE 8

Surface Soil Results and Exceedances - 5th Street

Towers Road Disposal Areas Phase I RI Report

Harvey Point Defense Testing Activity

Hertford, North Carolina

Sample ID	Background Value[1]	Protection of Groundwater PSRG[2]	Residential Health-Based PSRG[2]	Industrial Health-Based PSRG[2]	Detection Frequency	TR-5TH-SS01-0613	TR-5TH-SS02-0613	TR-5TH-SS03-0613	TR-5TH-SS04-0613	TR-5TH-SS05-0613*
Sample Date						6/10/13	6/10/13	6/10/13	6/10/13	6/10/13
Sample Depth (feet bgs)[3]						0.0-0.5/0.5-1	0.0-0.5/0.5-1	0.0-0.5/0.5-1	0.0-0.5/0.5-1	0.0-0.5/0.5-1
Magnesium	2,600	NA	NA	NA	5 / 5	1,490	1,840	1,390	940	864
Manganese	412	65	360	4,600	5 / 5	210	126	117	89.2	125
Mercury	0.037	1	2	3.1	1 / 1	NS	NS	0.739	NS	NS
Nickel	16.8	130	300	4,000	5 / 5	15.6	13	16.8	6.31	3.63
Potassium	765	NA	NA	NA	5 / 5	540	671	439	306	617
Sodium	102	NA	NA	NA	5 / 5	113	66.5	56.4	25.7 J	23.1 J
Vanadium	31.9	6	78	1,000	5 / 5	17.3	19.4	14.2	11.3	8.2
Zinc	87.3	1,200	4,600	62,000	5 / 5	174	192	876	123	32.1

Notes:

[1] Values are from the maximum values for the background samples collected during the June 2013 sampling event.

[2] Values are from the Inactive Hazardous Sites Branch Preliminary Soil Remediation Goals (PSRG) Table (NC DENR, July 2013). For carcinogenic PAHs without PSRG, the PSRG for benzo(a)pyrene was used. For non-carcinogenic PAHs without PSRG, the PSRG for pyrene was used. For PCBs, the unrestricted use residential/industrial PSRG of 1 mg/kg was used.

[3] Sample depth is 0.0 to 0.5 foot bgs for all analytes except VOCs, for which the sample depth is 0.5 to 1 foot bgs.

Underlined text indicates exceedance of the Protection of Groundwater PSRG criteria.

Bold text indicates exceedance of Preliminary Residential Health-Based Soil Remediation Goals.

Bold box indicates exceedance of Preliminary Industrial Health-Based Soil Remediation Goals.

Shading indicates detection.

Blue text indicates exceedance of maximum background value.

bgs - below ground surface

D - Compound identified in an analysis at a secondary dilution factor

J - Analyte present below the reporting limit

mg/kg - Milligrams per kilogram

NA - Not available/not applicable

NS - Not sampled

P - Indicates a greater than 25% difference of detection between the primary and secondary column.

Q - One or more quality control criteria failed

U - The material was analyzed for, but not detected

*The highest concentration of the parent sample and duplicate sample.

TABLE 9

Surface Soil COPCs - 5th Street Disposal Area

Towers Road Disposal Areas Phase I RI Report

Harvey Point Defense Testing Activity

Hertford, North Carolina

Chemical Name	Background Value[1]	Protection of Groundwater SRG[2]	Residential Health-Based PSRG[2]	Industrial Health-Based PSRG[2]	Detection Frequency	Exceeds Protection of Groundwater SRG	Exceeds Residential Health-Based PSRG	Exceeds Industrial Health-Based PSRG	Phase II COPC	Basis[3]
Volatile Organic Compounds (mg/kg)										
Benzene	NA	0.0073	1.1	5.4	1 / 5				**yes**	D
Styrene	NA	0.92	870	870	1 / 5				**yes**	D
Semivolatile Organic Compounds (mg/kg)										
Acenaphthene	NA	8.4	680	6,600	1 / 5				**yes**	D
Acenaphthylene	NA	21	340	3,400	1 / 5				**yes**	D
Anthracene	NA	660	3,400	34,000	1 / 5				**yes**	D
Benzo(a)anthracene	NA	0.18	0.15	2.1	4 / 5	**yes**	**yes**		**yes**	SRG
Benzo(a)pyrene	NA	0.059	0.015	0.21	3 / 5	**yes**	**yes**	**yes**	**yes**	SRG
Benzo(b)fluoranthene	NA	0.6	0.15	2.1	4 / 5	**yes**	**yes**		**yes**	SRG
Benzo(g,h,i)perylene	NA	7,800	340	3,400	2 / 5				**yes**	D
Benzo(k)fluoranthene	NA	5.9	1.5	21	3 / 5				**yes**	D
bis(2-Ethylhexyl)phthalate	NA	7.2	35	120	1 / 5				no	CLC
Carbazole	NA	0.37	NA	NA	1 / 5	**yes**	**yes**		**yes**	SRG
Chrysene	NA	18	15	210	4 / 5				**yes**	D
Dibenz(a,h)anthracene	NA	0.19	0.015	0.21	1 / 5		**yes**		**yes**	SRG
Dibenzofuran	NA	5.2	16	170	1 / 5				**yes**	D
Fluoranthene	NA	330	460	4,400	4 / 5				**yes**	D
Fluorene	NA	56	460	4,400	1 / 5				**yes**	D
Indeno(1,2,3-cd)pyrene	NA	2	0.15	2.1	2 / 5		**yes**		**yes**	SRG
Phenanthrene	NA	220	340	3,400	2 / 5				**yes**	D
Pyrene	NA	220	340	3,400	4 / 5				**yes**	D
Pesticide/Polychlorinated Biphenyls (mg/kg)										
Aroclor-1254	NA	0.14	1	1	5 / 5	**yes**	**yes**	**yes**	**yes**	SRG
Aroclor-1260	NA	0.14	1	1	5 / 5	**yes**	**yes**	**yes**	**yes**	SRG
Total Metals (mg/kg)										
Aluminum	32,000	NA	15,000	100,000	5 / 5		**yes**		no	NRS & B
Antimony	NA	0.9	6.2	82	1 / 5				**yes**	D
Arsenic	3.74	5.8	0.61	2.4	5 / 5		**yes**	**yes**	**yes**	SRG
Barium	134	580	3,000	38,000	5 / 5				no	B
Beryllium	0.64	63	32	400	5 / 5				no	B
Cadmium	0.88	3	14	160	5 / 5				**yes**	D
Calcium	3,600	NA	NA	NA	5 / 5				no	NUT
Chromium	38.5	360,000	24,000	100,000	5 / 5				no	B
Chromium (hexavalent)	2.11	3.8	0.29	5.6	1 / 1		**yes**		no	B
Cobalt	4.64	0.9	4.6	60	5 / 5	**yes**			no	B
Copper	441	700	620	8,200	5 / 5				no	B
Iron	14,100	150	11,000	100,000	5 / 5	**yes**	**yes**		**yes**	SRG
Lead	47.9	270	400	800	5 / 5				**yes**	D
Magnesium	2,600	NA	NA	NA	5 / 5				no	NUT
Manganese	412	65	360	4,600	5 / 5	**yes**			no	B
Mercury	0.037	1	2	3.1	1 / 1				**yes**	D

TABLE 9

Surface Soil COPCs - 5th Street Disposal Area

Towers Road Disposal Areas Phase I RI Report

Harvey Point Defense Testing Activity

Hertford, North Carolina

Chemical Name	Background Value[1]	Protection of Groundwater SRG[2]	Residential Health-Based PSRG[2]	Industrial Health-Based PSRG[2]	Detection Frequency	Exceeds Protection of Groundwater SRG	Exceeds Residential Health-Based PSRG	Exceeds Industrial Health-Based PSRG	Phase II COPC	Basis[3]
Nickel	16.8	130	300	4,000	5 / 5				no	B
Potassium	765	NA	NA	NA	5 / 5				no	NUT
Sodium	102	NA	NA	NA	5 / 5				no	NUT
Vanadium	31.9	6	78	1,000	5 / 5	**yes**			no	B
Zinc	87.3	1,200	4,600	62,000	5 / 5				**yes**	D

Notes:

[1] Values are from the maximum values for the background samples collected during the June 2013 sampling event.

[2] Values are from the Inactive Hazardous Sites Branch Preliminary Soil Remediation Goals (PSRG) Table (NC DENR, July 2013). For carcinogenic PAHs without PSRG, the PSRG for benzo(a)pyrene was used. For non-carcinogenic PAHs without PSRG, the PSRG for pyrene was used. For PCBs, the unrestricted use residential/industrial PSRG of 1 mg/kg was used.

[3] Basis:

B - Chemical was detected but is with background range

CLC - Chemical was detected but is a common laboratory contaminant detected below the regulatory standard

D - Chemical was detected outside of the background range (if applicable) and is not a common laboratory contaminant.

NRS - Chemical was detected but has no regulatory standard.

NUT - Chemical was detected but is a human nutrient with no regulatory standard

SRG - Chemical exceeds the NC Protection of Groundwater PSRG or a Health-Based Preliminary SRG and, if applicable, is outside of background range

COPC

Exceeds a PSRG

mg/kg - Milligrams per kilogram

TABLE 10

Summary of COPCs - 5th Street Disposal Area

Towers Road Disposal Areas Phase I RI Report

Harvey Point Defense Testing Activity

Hertford, North Carolina

Media	Contaminants of Potential Concern
Surface Soil	**VOCs**
	Benzene
	Styrene
	SVOCs
	Acenaphthene
	Acenaphthylene
	Anthracene
	Benzo(a)anthracene
	Benzo(a)pyrene
	Benzo(b)fluoranthene
	Benzo(g,h,i)perylene
	Benzo(k)fluoranthene
	Carbazole
	Chrysene
	Dibenz(a,h)anthracene
	Dibenzofuran
	Fluoranthene
	Fluorene
	Indeno(1,2,3-cd)pyrene
	Phenanthrene
	Pyrene
	PCBs
	Aroclor-1254
	Aroclor-1260
	Metals
	Antimony
	Arsenic
	Cadmium
	Iron
	Lead
	Mercury
	Zinc
Subsurface Soil	**VOCs**
	1,2,3-Trichlorobenzene
	1,2,4-Trichlorobenzene
	1,3-Dichlorobenzene
	1,4-Dichlorobenzene
	Benzene
	Carbon disulfide
	Chlorobenzene
	Cyclohexane
	Dichlorodifluoromethane (Freon-12)
	Ethylbenzene
	Isopropylbenzene
	m- and p-Xylene

TABLE 10

Summary of COPCs - 5th Street Disposal Area

Towers Road Disposal Areas Phase I RI Report

Harvey Point Defense Testing Activity

Hertford, North Carolina

Media	Contaminants of Potential Concern
Subsurface Soil (cont.)	Methyl acetate
	Methylene chloride
	Toluene
	SVOCs
	Acenaphthene
	Acenaphthylene
	Anthracene
	Benzo(a)anthracene
	Benzo(a)pyrene
	Benzo(b)fluoranthene
	Benzo(g,h,i)perylene
	Benzo(k)fluoranthene
	Chrysene
	Dibenz(a,h)anthracene
	Fluoranthene
	Fluorene
	Indeno(1,2,3-cd)pyrene
	Phenanthrene
	Pyrene
	Pesticide
	4,4'-DDD
	PCBs
	Aroclor-1254
	Aroclor-1260
	Metals
	Antimony
	Arsenic
	Barium
	Cadmium
	Chromium
	Cobalt
	Iron
	Lead
	Mercury
	Nickel
	Silver
	Zinc

TABLE 10

Summary of COPCs - 5th Street Disposal Area

Towers Road Disposal Areas Phase I RI Report

Harvey Point Defense Testing Activity

Hertford, North Carolina

Media	Contaminants of Potential Concern
Groundwater	**VOCs**
	1,2,3-Trichlorobenzene
	1,2,4-Trichlorobenzene
	1,2-Dichlorobenzene
	1,3-Dichlorobenzene
	1,4-Dichlorobenzene
	Benzene
	Chlorobenzene
	Dichlorodifluoromethane (Freon-12)
	Isopropylbenzene
	Methane
	Methyl-tert-butyl ether (MTBE)
	Trichlorofluoromethane (Freon-11)
	Vinyl Chloride
	SVOCs
	Anthracene
	bis(2-Ethylhexyl)phthalate
	Fluorene
	Naphthalene
	Metals
	Arsenic
	Barium
	Beryllium
	Chromium
	Cobalt
	Copper
	Iron
	Lead
	Manganese
	Nickel
	Vanadium
	Zinc

TABLE 11

Subsurface Soil Results and Exceedances - 2nd Street Disposal Area

Towers Road Disposal Areas Phase I RI Report

Harvey Point Defense Testing Activity

Hertford, North Carolina

Sample ID	Background Value[1]	Protection of Groundwater PSRG[2]	Residential Health-Based PSRG[2]	Industrial Health-Based PSRG[2]	Detection Frequency	TR-2ND-SB01-0.5-01-0613	TR-2ND-SB01-06-08-0613	TR-2ND-SB02-0.5-1-0613	TR-2ND-SB02-06-08-0613	TR-2ND-SB03-0.5-01-0613	TR-2ND-SB03-04-06-0613
Sample Date						6/11/13	6/11/13	6/19/13	6/19/13	6/19/13	6/19/13
Sample Depth (feet bgs)						0.5-1	6-8	0.5-1	6-8	0.5-1	4-6
Chemical Name											
Volatile Organic Compounds (mg/kg)											
2-Butanone	NA	16	5,600	28,000	5 / 18	0.0031 U	0.0024 U	0.0021 U	0.015	0.0029 U	0.0024 U
Acetone	NA	24	12,000	100,000	9 / 18	0.016 U	0.03	0.011 U	0.073	0.015 U	0.012 U
Benzene	NA	0.0073	1.1	5.4	3 / 18	0.0013 U	0.001 U	0.0008 U	0.0022 J	0.0012 U	0.001 U
Bromomethane	NA	0.05	1.5	6.4	1 / 18	0.0063 U	0.0049 U	0.0042 U	0.0062 U	0.0059 U	0.0049 U
Chloroform	NA	0.34	0.29	1.5	1 / 18	0.0013 U	0.001 U	0.0008 U	0.0012 U	6.00E-04 J	0.001 U
Chloromethane	NA	0.02	24	100	1 / 18	0.0013 U	0.001 U	0.0008 U	0.0012 U	0.0012 U	0.001 U
Dichlorodifluoromethane (Freon-12)	NA	29	19	80	1 / 18	0.0013 U	0.001 U	0.0008 U	0.0012 U	0.0012 U	0.001 U
Ethylbenzene	NA	8.1	5.4	27	2 / 18	0.0013 U	0.001 U	0.0008 U	0.0032	0.0012 U	0.001 U
Isopropylbenzene	NA	1.3	270	270	1 / 18	0.0013 U	0.001 U	0.0008 U	0.0017 J	0.0012 U	0.001 U
Methylene Chloride	NA	0.02	56	620	2 / 18	0.0063 U	0.0049 U	0.0042 U	0.0062 U	0.0059 U	0.0049 U
m- and p-Xylene	NA	NA	120	390	1 / 18	0.0025 U	0.002 U	0.0017 U	0.0065	0.0023 U	0.0019 U
o-Xylene	NA	NA	140	430	1 / 18	0.0013 U	0.001 U	0.0008 U	0.0057	0.0012 U	0.001 U
Styrene	NA	0.92	870	870	1 / 18	0.0013 U	0.001 U	0.0008 U	0.0012 U	0.0012 U	0.001 U
Toluene	NA	5.5	820	820	4 / 18	0.0013 U	0.001 U	0.0008 U	0.0014 J	0.0012 U	0.001 U
Trichlorofluoromethane (Freon-11)	NA	24	160	680	1 / 18	0.0013 U	0.001 U	0.0008 U	0.0012 U	0.0012 U	0.001 U
Xylene, total	NA	5.8	130	260	1 / 18	0.0025 U	0.002 U	0.0017 U	0.012	0.0023 U	0.0019 U
Semivolatile Organic Compounds (mg/kg)											
2-Methylnaphthalene	NA	1.6	46	370	2 / 14	0.042 J	0.032 U	0.029 U	0.77	0.033 U	0.031 U
Acenaphthene	NA	8.4	680	6,600	3 / 14	0.05	0.03 J	0.029 U	0.36	0.033 U	0.031 U
Acenaphthylene	NA	21	340	3,400	2 / 14	0.057	0.032 J	0.029 U	0.035 U	0.033 U	0.031 U
Anthracene	NA	660	3,400	34,000	3 / 14	0.047	0.022 J	0.029 U	0.34	0.033 U	0.031 U
Benzo(a)anthracene	NA	0.18	0.15	2.1	6 / 14	0.085	0.032 U	0.029 U	**0.42**	0.033 U	0.031 U
Benzo(a)pyrene	NA	0.059	0.015	0.21	4 / 14	**0.08**	0.032 U	0.029 U	**0.19**	0.033 U	0.031 U
Benzo(b)fluoranthene	NA	0.6	0.15	2.1	5 / 14	0.13	0.032 U	0.029 U	**0.35**	0.033 U	0.031 U
Benzo(g,h,i)perylene	NA	7,800	340	3,400	4 / 14	0.07	0.032 U	0.029 U	0.064	0.033 U	0.031 U
Benzo(k)fluoranthene	NA	5.9	1.5	21	5 / 14	0.085	0.032 U	0.029 U	0.2	0.033 U	0.031 U
bis(2-Ethylhexyl)phthalate	NA	7.2	35	120	3 / 14	0.13 U	0.13 U	0.12 U	0.28 UD	0.13 U	0.12 U
Chrysene	NA	18	15	210	8 / 14	0.11	0.015 J	0.029 U	0.41	0.033 U	0.015 J
Dibenz(a,h)anthracene	NA	0.19	0.015	0.21	2 / 14	0.031 U	0.032 U	0.029 U	0.035 U	0.033 U	0.031 U
Dibenzofuran	NA	5.2	16	170	1 / 14	0.13 U	0.13 U	0.12 U	0.46 JD	0.13 U	0.12 U
Fluoranthene	NA	330	460	4,400	6 / 14	0.13	0.032 U	0.029 U	0.99	0.033 U	0.031 U
Fluorene	NA	56	460	4,400	4 / 14	0.04 J	0.022 J	0.029 U	0.4	0.033 U	0.031 U
Indeno(1,2,3-cd)pyrene	NA	2	0.15	2.1	4 / 14	0.055	0.032 U	0.029 U	0.064	0.033 U	0.031 U
Naphthalene	NA	0.21	3.6	18	3 / 14	0.065	0.037 J	0.029 U	**4.1**	0.033 U	0.031 U
Phenanthrene	NA	220	340	3,400	4 / 14	0.1	0.032 U	0.029 U	1.4	0.033 U	0.031 U
Pyrene	NA	220	340	3,400	6 / 14	0.13	0.032 U	0.029 U	0.74	0.033 U	0.031 U
Pesticide/Polychlorinated Biphenyls (mg/kg)											
Aroclor-1254	NA	0.14	1	1	4 / 14	0.21	0.025 U	0.023 U	0.76	0.026 U	0.025 U
Aroclor-1260	NA	0.14	1	1	6 / 14	0.25	0.025 U	0.023 U	0.23	0.026 U	0.025 U
Total Metals (mg/kg)											
Aluminum	32,000	NA	15,000	100,000	18 / 18	**18,200**	**16,900**	**15,600**	10,500	**19,300**	13,600
Antimony	NA	0.9	6.2	82	5 / 18	**6.56**	1.54 U	1.33 U	**7.12**	1.3 U	1.24 U
Arsenic	3.74	5.8	0.61	2.4	18 / 18	**6.66**	**2.65 J**	**3.53**	**4.92**	**3.74**	**3.06**
Barium	134	580	3,000	38,000	18 / 18	238	47.1	51.6	103	65.3	43.8
Beryllium	0.64	63	32	400	18 / 18	0.347	0.399	0.384	0.32	0.42	0.287
Cadmium	0.88	3	14	160	11 / 18	3.78	0.0772 U	0.0667 U	2.24	0.0652 U	0.0618 U
Calcium	3,600	NA	NA	NA	18 / 18	13,800	1,050	1,260	15,900	1,680	1,230
Chromium	38.5	360,000	24,000	100,000	18 / 18	71.3	27.9	24.6	21.4	24.2	21.5

TABLE 11

Subsurface Soil Results and Exceedances - 2nd Street Disposal Area

Towers Road Disposal Areas Phase I RI Report

Harvey Point Defense Testing Activity

Hertford, North Carolina

Sample ID	Background Value[1]	Protection of Groundwater PSRG[2]	Residential Health-Based PSRG[2]	Industrial Health-Based PSRG[2]	Detection Frequency	TR-2ND-SB01-0.5-01-0613	TR-2ND-SB01-06-08-0613	TR-2ND-SB02-0.5-1-0613	TR-2ND-SB02-06-08-0613	TR-2ND-SB03-0.5-01-0613	TR-2ND-SB03-04-06-0613
Sample Date						6/11/13	6/11/13	6/19/13	6/19/13	6/19/13	6/19/13
Sample Depth (feet bgs)						0.5-1	6-8	0.5-1	6-8	0.5-1	4-6
Chromium (hexavalent)	2.11	3.8	0.29	5.6	4 / 4	0.26 U	**1.46**	**1.8**	0.28 U	NS	NS
Cobalt	4.64	0.9	4.6	60	18 / 18	**5.9**	4.04	3.59	**6.86**	3.91	3.28
Copper	441	700	620	8,200	18 / 18	219	7.35	7.17	96.8	9.13	9.56
Iron	14,100	150	11,000	100,000	18 / 18	**21,200**	**11,200**	9,210	**15,200**	8,830	7,540
Lead	47.9	270	400	800	18 / 18	375	5.37	7.7	213	6.73	7.82
Magnesium	2,600	NA	NA	NA	18 / 18	1,780	2,580	2,010	1,620	2,310	2,150
Manganese	412	65	360	4,600	18 / 18	**401**	99.4	77.7	267	81.1	77.6
Mercury	0.037	1	2	3.1	18 / 18	**31 D**	0.0113	0.0376	**2.54 D**	**2.12 D**	0.153
Nickel	16.8	130	300	4,000	18 / 18	25	11.2	9.6	12.2	13.3	10.3
Potassium	765	NA	NA	NA	18 / 18	737	983	707	968	938	772
Silver	NA	3.4	78	1,000	8 / 18	6.76	0.386 U	0.334 U	1.01	0.326 U	0.309 U
Sodium	136	NA	NA	NA	18 / 18	98	40.9	59.1	220	74.3	61.8
Thallium	1.29	0.28	0.16	2	9 / 14	1.5 U	**0.591 J**	**0.863 J**	1.39 U	**0.834 J**	1.24 U
Vanadium	31.9	6	78	1,000	18 / 18	19.8	28.6	25.1	19	20.6	18.5
Zinc	87.3	1,200	4,600	62,000	18 / 14	1,050	29	22.8	527	22.5	26.7

Notes:

[1] Values are from the maximum values for the background samples collected during the June 2013 sampling event.

[2] Values are from the Inactive Hazardous Sites Branch Preliminary Soil Remediation Goals (PSRG) Table (NC DENR, July 2013). For carcinogenic PAHs without PSRG, the PSRG for benzo(a)pyrene was used. For non-carcinogenic PAHs without PSRG, the PSRG for pyrene was used. For PCBs, the unrestricted use residential/industrial PSRG of 1 mg/kg was used.

Underlined text indicates exceedance of the Protection of Groundwater PSRG criteria.

Bold text indicates exceedance of Residential Health-Based Preliminary Soil Remediation Goals.

Bold box indicates exceedance of Industrial Health-Based Preliminary Soil Remediation Goals.

Shading indicates detection.

Blue text indicates exceedance of maximum background value.

bgs - below ground surface

D - Compound identified in an analysis at a secondary dilution factor

J - Analyte present below the reporting limit

mg/kg - Milligrams per kilogram

NA - Not available/not applicable

ND - The material was analyzed for, but not detected. Sampled by others and reported as ND.

NS - Not sampled

P - Indicates a greater than 25% difference of detection between the primary and secondary column.

Q - One or more quality control criteria failed

U - The material was analyzed for, but not detected

*The highest concentration of the parent sample and duplicate sample.

TABLE 11

Subsurface Soil Results and Exceedances - 2nd Street Disposal Area

Towers Road Disposal Areas Phase I RI Report

Harvey Point Defense Testing Activity

Hertford, North Carolina

Sample ID	Background Value[1]	Protection of Groundwater PSRG[2]	Residential Health-Based PSRG[2]	Industrial Health-Based PSRG[2]	TR-2ND-SB04-0.5-01-0613	TR-2ND-SB04-04-06-0613	TR-2ND-SB05-0.5-01-0613	TR-2ND-SB05-03-05-0613	TR-2ND-SB06-0.5-01-0613*	TR-2ND-SB06-05-07-0613*
Sample Date					6/19/13	6/19/13	6/19/13	6/19/13	6/19/13	6/19/13
Sample Depth (feet bgs)					0.5-1	4-6	0.5-1	3-5	0.5-1	5-7
Chemical Name										
Volatile Organic Compounds (mg/kg)										
2-Butanone	NA	16	5,600	28,000	0.0029 U	0.0025 U	0.003 U	0.004 J	0.0096	0.0032 U
Acetone	NA	24	12,000	100,000	0.015 U	0.012 U	0.015 U	0.045	0.043	0.016 U
Benzene	NA	0.0073	1.1	5.4	0.0012 U	0.001 U	0.0012 U	0.001 U	0.001 U	0.0013 U
Bromomethane	NA	0.05	1.5	6.4	0.0058 U	0.0049 U	0.006 U	0.005 U	0.00055 U	0.0063 U
Chloroform	NA	0.34	0.29	1.5	0.0012 U	0.001 U	0.0012 U	0.001 U	0.001 U	0.0013 U
Chloromethane	NA	0.02	24	100	0.0012 U	0.001 U	0.0012 U	0.001 U	0.0011 U	0.0013 U
Dichlorodifluoromethane (Freon-12)	NA	29	19	80	0.0012 U	0.001 U	0.0012 U	0.001 U	0.001 U	0.002 J
Ethylbenzene	NA	8.1	5.4	27	0.0012 U	0.001 U	0.0012 U	0.001 U	0.001 U	0.0013 U
Isopropylbenzene	NA	1.3	270	270	0.0012 U	0.001 U	0.0012 U	0.001 U	0.001 U	0.0013 U
Methylene Chloride	NA	0.02	56	620	0.0058 U	0.0049 U	0.006 U	0.005 U	0.0055 U	0.0063 U
m- and p-Xylene	NA	NA	120	390	0.0023 U	0.002 U	0.0024 U	0.002 U	0.002 U	0.0025 U
o-Xylene	NA	NA	140	430	0.0012 U	0.001 U	0.0012 U	0.001 U	0.001 U	0.0013 U
Styrene	NA	0.92	870	870	9.00E-04 J	0.001 U	0.0012 U	0.001 U	0.001 U	0.0013 U
Toluene	NA	5.5	820	820	0.0012 U	0.001 U	0.0012 U	0.001 U	0.0011 J	0.0013 U
Trichlorofluoromethane (Freon-11)	NA	24	160	680	0.0012 U	0.001 U	0.0012 U	0.001 U	0.001 U	0.0029
Xylene, total	NA	5.8	130	260	0.0023 U	0.002 U	0.0024 U	0.002 U	0.002 U	0.0025 U
Semivolatile Organic Compounds (mg/kg)										
2-Methylnaphthalene	NA	1.6	46	370	0.029 U	0.032 U	0.033 U	0.033 U	0.03 U	0.032 U
Acenaphthene	NA	8.4	680	6,600	0.029 U	0.032 U	0.033 U	0.033 U	0.03 U	0.032 U
Acenaphthylene	NA	21	340	3,400	0.029 U	0.032 U	0.033 U	0.033 U	0.03 U	0.032 U
Anthracene	NA	660	3,400	34,000	0.029 U	0.032 U	0.033 U	0.033 U	0.03 U	0.032 U
Benzo(a)anthracene	NA	0.18	0.15	2.1	0.019 J	0.078	0.066	0.021 J	0.03 U	0.032 U
Benzo(a)pyrene	NA	0.059	0.015	0.21	0.029 U	**0.073**	**0.064**	0.033 U	0.03 U	0.032 U
Benzo(b)fluoranthene	NA	0.6	0.15	2.1	0.04 J	0.063	0.064	0.033 U	0.03 U	0.032 U
Benzo(g,h,i)perylene	NA	7,800	340	3,400	0.029 U	0.066	0.061	0.033 U	0.03 U	0.032 U
Benzo(k)fluoranthene	NA	5.9	1.5	21	0.029 U	0.11	0.093	0.032 J	0.03 U	0.032 U
bis(2-Ethylhexyl)phthalate	NA	7.2	35	120	0.25 JDQ	0.27 J	0.26 UDQ	0.13 U	0.27 JD	0.13 U
Chrysene	NA	18	15	210	0.023 J	0.086	0.074	0.024 J	0.03 U	0.032 U
Dibenz(a,h)anthracene	NA	0.19	0.015	0.21	0.029 U	**0.058**	**0.045 J**	0.033 U	0.03 U	0.032 U
Dibenzofuran	NA	5.2	16	170	0.23 UD	0.13 U	0.26 UD	0.13 U	0.12 U	0.13 U
Fluoranthene	NA	330	460	4,400	0.023 J	0.078	0.072	0.026 J	0.03 U	0.032 U
Fluorene	NA	56	460	4,400	0.029 U	0.023 J	0.033 U	0.033 U	0.03 U	0.032 U
Indeno(1,2,3-cd)pyrene	NA	2	0.15	2.1	0.029 U	0.053	0.048	0.033 U	0.03 U	0.032 U
Naphthalene	NA	0.21	3.6	18	0.029 U	0.032 U	0.033 U	0.033 U	0.03 U	0.032 U
Phenanthrene	NA	220	340	3,400	0.029 U	0.073	0.058	0.033 U	0.03 U	0.032 U
Pyrene	NA	220	340	3,400	0.03 J	0.086	0.074	0.026 J	0.03 U	0.032 U
Pesticide/Polychlorinated Biphenyls (mg/kg)										
Aroclor-1254	NA	0.14	1	1	0.023 U	0.025 U	0.085	0.026 U	0.024 U	0.025 U
Aroclor-1260	NA	0.14	1	1	0.4	0.025 U	0.13	0.026 U	0.019 J	0.025 U
Total Metals (mg/kg)										
Aluminum	32,000	NA	15,000	100,000	**20,800**	12,500	14,500 D	**18,500**	12,300	**18,600**
Antimony	NA	0.9	6.2	82	1.34 U	1.64 U	**8.95 JD**	1.53 U	1.45 U	1.51 U
Arsenic	3.74	5.8	0.61	2.4	**3.49**	**2.58 J**	**9.45 JD**	**3.3**	**3.1**	**2.85 J**
Barium	134	580	3,000	38,000	114	49.5	251 D	70	102	66.9
Beryllium	0.64	63	32	400	0.49	0.319	0.317 JD	0.349	0.639	0.502
Cadmium	0.88	3	14	160	1.05	0.264	3.94 D	0.118 J	0.556	0.0753 U
Calcium	3,600	NA	NA	NA	3,530	1,190	22,200 D	1,490	2,110	1,090
Chromium	38.5	360,000	24,000	100,000	26.8	20.7	43.4 D	25.4	17.8	23.5

TABLE 11

Subsurface Soil Results and Exceedances - 2nd Street Disposal Area

Towers Road Disposal Areas Phase I RI Report

Harvey Point Defense Testing Activity

Hertford, North Carolina

Sample ID	Background Value[1]	Protection of Groundwater PSRG[2]	Residential Health-Based PSRG[2]	Industrial Health-Based PSRG[2]	TR-2ND-SB04-0.5-01-0613	TR-2ND-SB04-04-06-0613	TR-2ND-SB05-0.5-01-0613	TR-2ND-SB05-03-05-0613	TR-2ND-SB06-0.5-01-0613*	TR-2ND-SB06-05-07-0613*
Sample Date					6/19/13	6/19/13	6/19/13	6/19/13	6/19/13	6/19/13
Sample Depth (feet bgs)					0.5-1	4-6	0.5-1	3-5	0.5-1	5-7
Chromium (hexavalent)	2.11	3.8	0.29	5.6	NS	NS	NS	NS	**1.72**	**2.04**
Cobalt	4.64	0.9	4.6	60	4.82	2.96	5.98 D	3.39	3.53	3.28
Copper	441	700	620	8,200	77.2	20.6	426 D	30.1	20.1	6.47
Iron	14,100	150	11,000	100,000	**11,300**	8,440	30,100 D	9,400	7,250	8,580
Lead	47.9	270	400	800	48.3	22.1	2,110 D	20.3	25.9	7.4
Magnesium	2,600	NA	NA	NA	1,870	2,140	1,810 D	2,390	1,300	2,000
Manganese	412	65	360	4,600	167	77.3	474 D	94.5	1,140	119
Mercury	0.037	1	2	3.1	0.407	0.0926	2.29 D	51.3 D	0.18	0.0179
Nickel	16.8	130	300	4,000	12.9	9.3	27.6 D	13.2	8.78	10.7
Potassium	765	NA	NA	NA	826	711	852 D	941	533	643
Silver	NA	3.4	78	1,000	0.143 J	0.328 J	8.87 D	0.383 U	0.363 U	0.376 U
Sodium	136	NA	NA	NA	86.2	56.8	197 D	225	35.7 J	52.8
Thallium	1.29	0.28	0.16	2	**0.398 J**	**0.493 J**	6.63 UD	**0.431 J**	1.45 U	**0.511 J**
Vanadium	31.9	6	78	1,000	20.6	18.1	18.5 D	20.4	15.9	24.5
Zinc	87.3	1,200	4,600	62,000	106	117	1,940 D	670	46	21.8

Notes:

[1] Values are from the maximum values for the background samples collected during the June 2013 sampling event.

[2] Values are from the Inactive Hazardous Sites Branch Preliminary Soil Remediation Goals (PSRG) Table (NC DENR, July 201
carcinogenic PAHs without PSRG, the PSRG for benzo(a)pyrene was used. For non-carcinogenic PAHs without PSRG, the PSI
was used. For PCBs, the unrestricted use residential/industrial PSRG of 1 mg/kg was used.

Underlined text indicates exceedance of the Protection of Groundwater PSRG criteria.

Bold text indicates exceedance of Residential Health-Based Preliminary Soil Remediation Goals.

Bold box indicates exceedance of Industrial Health-Based Preliminary Soil Remediation Goals.

Shading indicates detection.

Blue text indicates exceedance of maximum background value.

bgs - below ground surface

D - Compound identified in an analysis at a secondary dilution factor

J - Analyte present below the reporting limit

mg/kg - Milligrams per kilogram

NA - Not available/not applicable

ND - The material was analyzed for, but not detected. Sampled by others and reported as ND.

NS - Not sampled

P - Indicates a greater than 25% difference of detection between the primary and secondary column.

Q - One or more quality control criteria failed

U - The material was analyzed for, but not detected

*The highest concentration of the parent sample and duplicate sample.

TABLE 11

Subsurface Soil Results and Exceedances - 2nd Street Disposal Area

Towers Road Disposal Areas Phase I RI Report

Harvey Point Defense Testing Activity

Hertford, North Carolina

Sample ID	Background Value[1]	Protection of Groundwater PSRG[2]	Residential Health-Based PSRG[2]	Industrial Health-Based PSRG[2]	TR-2ND-SB07-0.5-01-0613	TR-2ND-SB07-04-06-0613	2nd-1-2	2nd-2-2	2nd-3-2	2nd-4-2
Sample Date					6/19/13	6/19/13	1/10/12	1/10/12	1/10/12	1/10/12
Sample Depth (feet bgs)					0.5-1	4-6	8-12	8-12	8-12	8-12
Chemical Name										
Volatile Organic Compounds (mg/kg)										
2-Butanone	NA	16	5,600	28,000	0.0022 U	0.0025 U	ND	0.00938 J	ND	0.00998 J
Acetone	NA	24	12,000	100,000	0.011 U	0.013 U	0.0365 J	0.0658	0.016 J	0.0274 J
Benzene	NA	0.0073	1.1	5.4	0.0009 U	0.001 U	0.00346	0.00601	ND	ND
Bromomethane	NA	0.05	1.5	6.4	0.0044 U	0.0051 U	ND	0.00348 J	ND	ND
Chloroform	NA	0.34	0.29	1.5	0.0009 U	0.001 U	ND	ND	ND	ND
Chloromethane	NA	0.02	24	100	0.0009 U	0.001 U	ND	0.00701	ND	ND
Dichlorodifluoromethane (Freon-12)	NA	29	19	80	0.0009 U	0.001 U	ND	ND	ND	ND
Ethylbenzene	NA	8.1	5.4	27	0.0009 U	0.001 U	ND	ND	ND	0.00749 J
Isopropylbenzene	NA	1.3	270	270	0.0009 U	0.001 U	ND	ND	ND	ND
Methylene Chloride	NA	0.02	56	620	0.0044 U	0.0051 U	ND	ND	0.0016 J	0.0024 J
m- and p-Xylene	NA	NA	120	390	0.0017 U	0.002 U	ND	ND	ND	ND
o-Xylene	NA	NA	140	430	0.0009 U	0.001 U	ND	ND	ND	ND
Styrene	NA	0.92	870	870	0.0009 U	0.001 U	ND	ND	ND	ND
Toluene	NA	5.5	820	820	0.0009 U	0.001 U	0.00115	0.00246 J	ND	ND
Trichlorofluoromethane (Freon-11)	NA	24	160	680	0.0009 U	0.001 U	ND	ND	ND	ND
Xylene, total	NA	5.8	130	260	0.0017 U	0.002 U	ND	ND	ND	ND
Semivolatile Organic Compounds (mg/kg)										
2-Methylnaphthalene	NA	1.6	46	370	0.03 U	0.031 U	NA	NA	NA	NA
Acenaphthene	NA	8.4	680	6,600	0.03 U	0.031 U	NA	NA	NA	NA
Acenaphthylene	NA	21	340	3,400	0.03 U	0.031 U	NA	NA	NA	NA
Anthracene	NA	660	3,400	34,000	0.03 U	0.031 U	NA	NA	NA	NA
Benzo(a)anthracene	NA	0.18	0.15	2.1	0.03 U	0.031 U	NA	NA	NA	NA
Benzo(a)pyrene	NA	0.059	0.015	0.21	0.03 U	0.031 U	NA	NA	NA	NA
Benzo(b)fluoranthene	NA	0.6	0.15	2.1	0.03 U	0.031 U	NA	NA	NA	NA
Benzo(g,h,i)perylene	NA	7,800	340	3,400	0.03 U	0.031 U	NA	NA	NA	NA
Benzo(k)fluoranthene	NA	5.9	1.5	21	0.03 U	0.031 U	NA	NA	NA	NA
bis(2-Ethylhexyl)phthalate	NA	7.2	35	120	0.51	0.12 U	NA	NA	NA	NA
Chrysene	NA	18	15	210	0.03 U	0.031 U	NA	NA	NA	NA
Dibenz(a,h)anthracene	NA	0.19	0.015	0.21	0.03 U	0.031 U	NA	NA	NA	NA
Dibenzofuran	NA	5.2	16	170	0.12 U	0.12 U	NA	NA	NA	NA
Fluoranthene	NA	330	460	4,400	0.03 U	0.031 U	NA	NA	NA	NA
Fluorene	NA	56	460	4,400	0.03 U	0.031 U	NA	NA	NA	NA
Indeno(1,2,3-cd)pyrene	NA	2	0.15	2.1	0.03 U	0.031 U	NA	NA	NA	NA
Naphthalene	NA	0.21	3.6	18	0.03 U	0.031 U	NA	NA	NA	NA
Phenanthrene	NA	220	340	3,400	0.03 U	0.031 U	NA	NA	NA	NA
Pyrene	NA	220	340	3,400	0.03 U	0.031 U	NA	NA	NA	NA
Pesticide/Polychlorinated Biphenyls (mg/kg)										
Aroclor-1254	NA	0.14	1	1	0.1 PQ	0.025 U	NA	NA	NA	NA
Aroclor-1260	NA	0.14	1	1	0.14	0.025 U	NA	NA	NA	NA
Total Metals (mg/kg)										
Aluminum	32,000	NA	15,000	100,000	13,000	**17,800**	14,100	13,600	13,300	**18,800**
Antimony	NA	0.9	6.2	82	1.33 U	1.39 U	4.5	3.11	ND	ND
Arsenic	3.74	5.8	0.61	2.4	**2.29 J**	**3.09**	**29.6**	**4.35**	**2.73**	**0.862**
Barium	134	580	3,000	38,000	63	69.5	105	101	40.3	60.3
Beryllium	0.64	63	32	400	0.409	0.428	0.0442 J	0.0477 J	0.0437 J	0.0448 J
Cadmium	0.88	3	14	160	0.0665 U	0.0696 U	3.15	2.7	0.0219 J	0.0336 J
Calcium	3,600	NA	NA	NA	576	594	7,960	8,590	450	1,010
Chromium	38.5	360,000	24,000	100,000	19.4	23.3	43.1	25.1	17.1	36.1

TABLE 11

Subsurface Soil Results and Exceedances - 2nd Street Disposal Area

Towers Road Disposal Areas Phase I RI Report

Harvey Point Defense Testing Activity

Hertford, North Carolina

Sample ID	Background Value[1]	Protection of Groundwater PSRG[2]	Residential Health-Based PSRG[2]	Industrial Health-Based PSRG[2]	TR-2ND-SB07-0.5-01-0613	TR-2ND-SB07-04-06-0613	2nd-1-2	2nd-2-2	2nd-3-2	2nd-4-2
Sample Date					6/19/13	6/19/13	1/10/12	1/10/12	1/10/12	1/10/12
Sample Depth (feet bgs)					0.5-1	4-6	8-12	8-12	8-12	8-12
Chromium (hexavalent)	2.11	3.8	0.29	5.6	NS	NS	NS	NS	NS	NS
Cobalt	4.64	0.9	4.6	60	2.85	3.53	**5.68**	3.85	2.79	4.37
Copper	441	700	620	8,200	5.43	7.24	138	178	5.52	10.2
Iron	14,100	150	11,000	100,000	6,620	8,470	12,700	**18,900**	8,400	10,400
Lead	47.9	270	400	800	6.65	6.07	112	202	3.52	5.36
Magnesium	2,600	NA	NA	NA	1,630	2,130	3,970	2,080	2,150	3,090
Manganese	412	65	360	4,600	189	124	229	231	43.5	89.3
Mercury	0.037	1	2	3.1	0.0326	0.0271	0.312	1.74	0.00368 J	0.038
Nickel	16.8	130	300	4,000	8.41	10.8	11.7	23.2	8.77	23.2
Potassium	765	NA	NA	NA	579	732	938	927	642	1,240
Silver	NA	3.4	78	1,000	0.333 U	0.348 U	8.8	1.62	ND	0.0224 J
Sodium	136	NA	NA	NA	55.6	76.3	160	112	111	85.2
Thallium	1.29	0.28	0.16	2	**0.489 J**	**0.542 J**	0.0632 J	0.0636 J	0.0437 J	0.101 J
Vanadium	31.9	6	78	1,000	17.1	21.9	18.9	21.2	19	34.5
Zinc	87.3	1,200	4,600	62,000	17.4	20.4	481	439	16.3	27.2

Notes:

[1] Values are from the maximum values for the background samples collected during the June 2013 sampling event.

[2] Values are from the Inactive Hazardous Sites Branch Preliminary Soil Remediation Goals (PSRG) Table (NC DENR, July 201
carcinogenic PAHs without PSRG, the PSRG for benzo(a)pyrene was used. For non-carcinogenic PAHs without PSRG, the PSI
was used. For PCBs, the unrestricted use residential/industrial PSRG of 1 mg/kg was used.

Underlined text indicates exceedance of the Protection of Groundwater PSRG criteria.

Bold text indicates exceedance of Residential Health-Based Preliminary Soil Remediation Goals.

Bold box indicates exceedance of Industrial Health-Based Preliminary Soil Remediation Goals.

Shading indicates detection.

Blue text indicates exceedance of maximum background value.

bgs - below ground surface

D - Compound identified in an analysis at a secondary dilution factor

J - Analyte present below the reporting limit

mg/kg - Milligrams per kilogram

NA - Not available/not applicable

ND - The material was analyzed for, but not detected. Sampled by others and reported as ND.

NS - Not sampled

P - Indicates a greater than 25% difference of detection between the primary and secondary column.

Q - One or more quality control criteria failed

U - The material was analyzed for, but not detected

*The highest concentration of the parent sample and duplicate sample.

TABLE 12

Subsurface Soil COPCs - 2nd Street Disposal Area

Towers Road Disposal Areas Phase I RI Report

Harvey Point Defense Testing Activity

Hertford, North Carolina

Chemical Name	Background Value[1]	Protection of Groundwater PSRG[2]	Residential Health-Based PSRG[2]	Industrial Health-Based PSRG[2]	Frequency of Detections	Exceeds Protection of Groundwater PSRG	Exceeds Residential Health-Based PSRG	Exceeds Industrial Health-Based PSRG	Phase II COPC	Basis[3]
Volatile Organic Compounds (mg/kg)										
2-Butanone	NA	16	5,600	28,000	5 / 18				no	CLC
Acetone	NA	24	12,000	100,000	9 / 18				no	CLC
Benzene	NA	0.0073	1.1	5.4	3 / 18				**yes**	D
Bromomethane	NA	0.05	1.5	6.4	1 / 18				**yes**	D
Chloroform	NA	0.34	0.29	1.5	1 / 18				**yes**	D
Chloromethane	NA	0.02	24	100	1 / 18				**yes**	D
Dichlorodifluoromethane (Freon-12)	NA	29	19	80	1 / 18				**yes**	D
Ethylbenzene	NA	8.1	5.4	27	2 / 18				**yes**	D
Isopropylbenzene	NA	1.3	270	270	1 / 18				**yes**	D
Methylene Chloride	NA	0.02	56	620	2 / 18				no	CLC
m- and p-Xylene	NA	NA	120	390	1 / 18				**yes**	D
o-Xylene	NA	NA	140	430	1 / 18				**yes**	D
Styrene	NA	0.92	870	870	1 / 18				**yes**	D
Toluene	NA	5.5	820	820	4 / 18				**yes**	D
Trichlorofluoromethane (Freon-11)	NA	24	160	680	1 / 18				**yes**	D
Xylene, total	NA	5.8	130	260	1 / 18				**yes**	D
Semivolatile Organic Compounds (mg/kg)										
2-Methylnaphthalene	NA	1.6	46	370	2 / 14				**yes**	D
Acenaphthene	NA	8.4	680	6,600	3 / 14				**yes**	D
Acenaphthylene	NA	21	340	3,400	2 / 14				**yes**	D
Anthracene	NA	660	3,400	34,000	3 / 14				**yes**	D
Benzo(a)anthracene	NA	0.18	0.15	2.1	6 / 14	**yes**	**yes**		**yes**	SRG
Benzo(a)pyrene	NA	0.059	0.015	0.21	4 / 14	**yes**	**yes**		**yes**	SRG
Benzo(b)fluoranthene	NA	0.6	0.15	2.1	5 / 14		**yes**		**yes**	SRG
Benzo(g,h,i)perylene	NA	7,800	340	3,400	4 / 14				**yes**	D
Benzo(k)fluoranthene	NA	5.9	1.5	21	5 / 14				**yes**	D
bis(2-Ethylhexyl)phthalate	NA	7.2	35	120	3 / 14				no	CLC
Chrysene	NA	18	15	210	8 / 14				**yes**	D
Dibenz(a,h)anthracene	NA	0.19	0.015	0.21	2 / 14		**yes**		**yes**	SRG
Dibenzofuran	NA	5.2	16	170	1 / 14				**yes**	D
Fluoranthene	NA	330	460	4,400	6 / 14				**yes**	D
Fluorene	NA	56	460	4,400	4 / 14				**yes**	D
Indeno(1,2,3-cd)pyrene	NA	2	0.15	2.1	4 / 14				**yes**	D
Naphthalene	NA	0.21	3.6	18	3 / 14	**yes**	**yes**		**yes**	SRG
Phenanthrene	NA	220	340	3,400	4 / 14				**yes**	D
Pyrene	NA	220	340	3,400	6 / 14				**yes**	D
Pesticide/Polychlorinated Biphenyls (mg/kg)										
Aroclor-1254	NA	0.14	1	1	4 / 14	**yes**			**yes**	SRG
Aroclor-1260	NA	0.14	1	1	6 / 14	**yes**			**yes**	SRG

TABLE 12

Subsurface Soil COPCs - 2nd Street Disposal Area

Towers Road Disposal Areas Phase I RI Report

Harvey Point Defense Testing Activity

Hertford, North Carolina

Chemical Name	Background Value[1]	Protection of Groundwater PSRG[2]	Residential Health-Based PSRG[2]	Industrial Health-Based PSRG[2]	Frequency of Detections	Exceeds Protection of Groundwater PSRG	Exceeds Residential Health-Based PSRG	Exceeds Industrial Health-Based PSRG	Phase II COPC	Basis[3]
Total Metals (mg/kg)										
Aluminum	32,000	NA	15,000	100,000	18 / 18				no	NRS & B
Antimony	NA	0.9	6.2	82	5 / 18	**yes**	**yes**		**yes**	SRG
Arsenic	3.74	5.8	0.61	2.4	18 / 18	**yes**	**yes**	**yes**	**yes**	SRG
Barium	134	580	3,000	38,000	18 / 18				**yes**	D
Beryllium	0.64	63	32	400	18 / 18				no	B
Cadmium	0.88	3	14	160	11 / 18	**yes**			**yes**	SRG
Calcium	3,600	NA	NA	NA	18 / 18				no	NUT
Chromium	38.5	360,000	24,000	100,000	18 / 18				**yes**	D
Chromium (hexavalent)	2.11	3.8	0.29	5.6	4 / 4		**yes**		no	B
Cobalt	4.64	0.9	4.6	60	18 / 18	**yes**	**yes**		**yes**	SRG
Copper	441	700	620	8,200	18 / 18				no	B
Iron	14,100	150	11,000	100,000	18 / 18	**yes**	**yes**		**yes**	SRG
Lead	47.9	270	400	800	18 / 18	**yes**	**yes**	**yes**	**yes**	SRG
Magnesium	2,600	NA	NA	NA	18 / 18				no	NUT
Manganese	412	65	360	4,600	18 / 18	**yes**	**yes**		**yes**	SRG
Mercury	0.037	1	2	3.1	18 / 18	**yes**	**yes**	**yes**	**yes**	SRG
Nickel	16.8	130	300	4,000	18 / 18				**yes**	D
Potassium	765	NA	NA	NA	18 / 18				no	NUT
Silver	NA	3.4	78	1,000	8 / 18	**yes**			**yes**	SRG
Sodium	136	NA	NA	NA	18 / 18				no	NUT
Thallium	1.29	0.28	0.16	2	9 / 14	**yes**	**yes**		no	B
Vanadium	31.9	6	78	1,000	18 / 18	**yes**			**yes**	SRG
Zinc	87.3	1,200	4,600	62,000	18 / 14	**yes**			**yes**	SRG

Notes:

[1] Values are from the maximum values for the background samples collected during the June 2013 sampling event.

[2] Values are from the Inactive Hazardous Sites Branch Preliminary Soil Remediation Goals (PSRG) Table (NC DENR, July 2013). For carcinogenic PAHs without PSRG, the PSRG for benzo(a)pyrene was used. For non-carcinogenic PAHs without PSRG, the PSRG for pyrene was used. For PCBs, the unrestricted use residential/industrial PSRG of 1 mg/kg was used.

[3]Basis:

B - Chemical was detected but is with background range

CLC - Chemical was detected but is a common laboratory contaminant detected below the regulatory standard

D - Chemical was detected outside of the background range (if applicable) and is not a common laboratory contaminant.

NRS - Chemical was detected but has no regulatory standard.

NUT - Chemical was detected but is a human nutrient with no regulatory standard

background range

COPC

Exceeds a SRG

mg/kg - Milligrams per kilogram

NA - Not available/not applicable

ND - The material was analyzed for, but not detected. Sampled by others and reported as ND.

NS - Not sampled

P - Indicates a greater than 25% difference of detection between the primary and secondary column.

Q - One or more quality control criteria failed

U - The material was analyzed for, but not detected

TABLE 13

Subsurface Soil Results and Exceedances - 5th Street Disposal Area

Towers Road Disposal Areas Phase I RI Report

Harvey Point Defense Testing Activity

Hertford, North Carolina

Sample ID	Background Value[1]	Protection of Groundwater PSRG[2]	Residential Health-Based PSRG[2]	Industrial Health-Based	Detection Frequency	TR-5TH-SB01-0.5-01-0613	TR-5TH-SB01-02-04-0613	TR-5TH-SB02-0.5-01-0613	TR-5TH-SB02-02-04-0613	TR-5TH-SB03-0.5-01-0613	TR-5TH-SB03-02-04-0613	TR-5TH-SB04-0.5-01-0613*
Sample Date						6/12/13	6/12/13	6/13/13	6/13/13	6/17/13	6/17/13	6/17/13
Sample Depth (feet below ground surface)						0.5-1	2-4	0.5-1	2-4	0.5-1	2-4	0.5-1
Chemical Name												
Volatile Organic Compounds (mg/kg)												
1,2,3-Trichlorobenzene	NA	NA	9.8	98	1 / 16	0.0009 U	0.0009 U	0.0008 U	0.0009 U	0.0014 U	0.0011 U	0.0009 U
1,2,4-Trichlorobenzene	NA	2.20	12	54	1 / 16	0.0009 U	0.0009 U	0.0008 U	0.0009 U	0.0014 U	0.0011 U	0.0009 U
1,3-Dichlorobenzene	NA	2.40	NA	NA	1 / 16	0.0009 U	0.0009 U	0.0008 U	0.0009 U	0.0014 U	0.0011 U	0.0009 U
1,4-Dichlorobenzene	NA	0.07	2.4	12	1 / 16	0.0009 U	0.0009 U	0.0008 U	0.0009 U	0.0014 U	0.0011 U	0.0009 U
2-Butanone	NA	16	5,600	28,000	5 / 16	0.0023 U	0.031	0.0021 U	0.0022 U	0.0034 U	0.0028 U	0.0022 U
Acetone	NA	24	12,000	100,000	6 / 16	0.011 U	0.12	0.011 U	0.0062 J	0.017 U	0.014 J	0.011 U
Benzene	NA	0.0073	1.1	5.4	1 / 16	0.0009 U	0.0009 U	0.0008 U	0.0009 U	0.0014 U	0.0011 U	7.00E-04 J
Carbon disulfide	NA	3.80	160	740	1 / 16	0.0046 U	0.0045 U	0.0042 U	0.0043 U	0.0068 U	0.0055 U	0.0044 U
Chlorobenzene	NA	0.43	58	280	1 / 16	0.0009 U	0.0009 U	0.0008 U	0.0009 U	0.0014 U	0.0011 U	0.0009 U
Cyclohexane	NA	1.46	120	120	1 / 16	0.0009 U	0.0009 U	0.0008 U	0.0009 U	0.0014 U	0.0011 U	8.00E-04 J
Dichlorodifluoromethane (Freon-12)	NA	29	19	80	1 / 16	0.0009 U	0.0009 U	0.0008 U	0.0009 U	0.0014 U	0.0011 U	0.0009 U
Ethylbenzene	NA	8.10	5.4	27	1 / 16	0.0009 U	0.0009 U	0.0008 U	0.0009 U	0.0014 U	0.0011 U	0.0009 U
Isopropylbenzene	NA	1.3	270	270	1 / 16	0.0009 U	0.0009 U	0.0008 U	0.0009 U	0.0014 U	0.0011 U	0.0009 U
m- and p-Xylene	NA	5.8	120	390	1 / 16	0.0018 U	0.0018 U	0.0017 U	0.0017 U	0.0027 U	0.0022 U	0.0018 U
Methyl acetate	NA	NA	16,000	29,000	1 / 16	0.0046 U	0.0045 U	0.0042 U	0.0043 U	0.0068 U	0.0055 U	0.0044 U
Methylene chloride	NA	0.02	56	620	4 / 16	0.0046 U	0.0045 U	0.0042 U	0.0043 U	0.0068 U	0.0055 U	0.0044 U
Toluene	NA	5.50	820	820	2 / 16	0.0009 U	0.0009 U	0.0008 U	0.0009 U	0.0014 U	0.0011 U	0.0018
Semivolatile Organic Compounds (mg/kg)												
Acenaphthene	NA	8.4	680	6,600	2 / 12	0.029 U	0.022 J	0.031 U	0.03 U	0.034 U	0.032 U	0.028 U
Acenaphthylene	NA	21	340	3,400	1 / 12	0.059	0.031 U	0.031 U	0.03 U	0.034 U	0.032 U	0.028 U
Anthracene	NA	660	3,400	34,000	4 / 12	0.057	0.039 J	0.031 U	0.03 U	0.059	0.032 U	0.018 J
Benzo(a)anthracene	NA	0.18	0.15	2.1	7 / 12	0.081	0.056	0.039 J	0.03 U	**0.16**	0.032 U	0.038 J
Benzo(a)pyrene	NA	0.059	0.015	0.21	7 / 12	**0.22**	**0.039 J**	**0.025 J**	0.03 U	**0.14**	0.032 U	**0.056**
Benzo(b)fluoranthene	NA	0.6	0.15	2.1	7 / 12	**0.28**	0.076	0.052	0.03 U	**0.21**	0.032 U	0.15
Benzo(g,h,i)perylene	NA	7,800	340	3,400	4 / 12	0.2	0.027 J	0.031 U	0.03 U	0.078	0.032 U	0.065
Benzo(k)fluoranthene	NA	5.9	1.5	21	6 / 12	0.13	0.042 J	0.034 J	0.03 U	0.12	0.032 U	0.083
bis(2-Ethylhexyl)phthalate	NA	7.2	35	120	2 / 12	0.12 U	0.32 J	0.12 U	0.12 U	0.14 U	0.13 U	0.18 J
Chrysene	NA	18	15	210	7 / 12	0.11	0.056	0.047	0.03 U	0.16	0.032 U	0.087
Dibenz(a,h)anthracene	NA	0.19	0.015	0.21	1 / 12	**0.05**	0.031 U	0.031 U	0.03 U	0.034 U	0.032 U	0.028 U
Fluoranthene	NA	330	460	4,400	7 / 12	0.15	0.22	0.037 J	0.03 U	0.32	0.032 U	0.047
Fluorene	NA	56	460	4,400	1 / 12	0.029 U	0.022 J	0.031 U	0.03 U	0.034 U	0.032 U	0.028 U
Indeno(1,2,3-cd)pyrene	NA	2	0.15	2.1	4 / 12	**0.16**	0.022 J	0.031 U	0.03 U	0.062	0.032 U	0.049
Phenanthrene	NA	220	340	3,400	5 / 12	0.088	0.11	0.031 U	0.03 U	0.2	0.032 U	0.027 J
Pyrene	NA	220	340	3,400	7 / 12	0.16	0.2	0.039 J	0.03 U	0.28	0.032 U	0.054
Pesticide/Polychlorinated Biphenyls (mg/kg)												
4,4'-DDD	NA	0.24	2	7.2	3 / 12	0.0023 UD	0.058 D	0.0012 U	0.0012 U	0.0027 UD	0.0013 U	0.0022 UD
Aroclor-1254	NA	0.14	1	1	8 / 12	**2.2 D**	0.95	0.06	0.024 U	0.96 DQ	0.026 U	**1.5 D**
Aroclor-1260	NA	0.14	1	1	10 / 12	**1.9 D**	0.65	0.066	0.024 U	**1.8 D**	0.036 J	**2.3 D**
Total Metals (mg/kg)												
Aluminum	32,000	NA	15,000	100,000	16 / 16	10,100	10,800	**20,400**	**22,100**	14,200	**27,900**	**15,200**
Antimony	NA	0.9	6.2	82	6 / 16	1.15 U	1.16 J	1.86 U	1.91 U	2.35 J	2.17 J	1.6 U
Arsenic	3.74	5.8	0.61	2.4	16 / 16	**2.87**	**3.5 J**	**5.3**	**2.79 J**	**3.69 J**	**0.765 J**	**4.79**
Barium	134	580	3,000	38,000	16 / 16	79.3	97.3	70.8	61.7	150	72.1	82.9
Beryllium	0.64	63	32	400	16 / 16	0.331	0.334	0.416	0.487	0.392	0.392	0.394
Cadmium	0.88	3	14	160	14 / 16	2.86	2.99	0.727	0.0953 U	3.98	0.101 J	1.36
Calcium	3,600	NA	NA	NA	16 / 16	1,860	2,480	1,800	877	5,010	1,750	1,870
Chromium	38.5	360,000	24,000	100,000	16 / 16	22.4	22	36.9	26.2	27.5	34.2	30.4
Chromium (hexavalent)	2.11	3.8	0.29	5.6	3 / 4	**0.88**	0.23 U	**1.08**	**0.92**	NS	NS	NS
Cobalt	4.64	0.9	4.6	60	16 / 16	3.33	3.56	**5.28**	3.66	**5.84**	4.3	**4.69**
Copper	441	700	620	8,200	16 / 16	57.1	49.2	49.5	7.29	212	10.5	72.5
Iron	14,100	150	11,000	100,000	16 / 16	9,760	**12,800**	**26,100**	10,000	**16,000**	**12,000**	**26,200**
Lead	47.9	270	400	800	16 / 16	196	349	103	7.15	389	10.8	204

TABLE 13

Subsurface Soil Results and Exceedances - 5th Street Disposal Area

Towers Road Disposal Areas Phase I RI Report

Harvey Point Defense Testing Activity

Hertford, North Carolina

Sample ID	Background Value[1]	Protection of Groundwater PSRG[2]	Residential Health-Based PSRG[2]	Industrial Health-Based	Detection Frequency	TR-5TH-SB01-0.5-01-0613	TR-5TH-SB01-02-04-0613	TR-5TH-SB02-0.5-01-0613	TR-5TH-SB02-02-04-0613	TR-5TH-SB03-0.5-01-0613	TR-5TH-SB03-02-04-0613	TR-5TH-SB04-0.5-01-0613*
Sample Date						6/12/13	6/12/13	6/13/13	6/13/13	6/17/13	6/17/13	6/17/13
Sample Depth (feet below ground surface)						0.5-1	2-4	0.5-1	2-4	0.5-1	2-4	0.5-1
Chemical Name												
Magnesium	2,600	NA	NA	NA	16 / 16	1,470	1,480	2,280	2,280	1,920	2,950	1,960
Manganese	412	65	360	4,600	16 / 16	153	227	181	69.6	163	94.9 D	177
Mercury	0.037	1	2	3.1	7 / 8	1.57 D	1.31	0.202	0.00695 U	NS	NS	NS
Nickel	16.8	130	300	4,000	16 / 16	10.4	10.8	17.6	12	26.9	14.4	17.5
Potassium	765	NA	NA	NA	16 / 16	407	424	748	643	666	971	618
Silver	NA	3.4	78	1,000	4 / 16	0.288 U	0.443 U	0.465 U	0.476 U	0.181 J	0.406 U	0.401 U
Sodium	136	NA	NA	NA	16 / 16	53.9	56.9	115	335	58.6	68.2	67.8
Thallium	1.29	0.28	0.16	2	7 / 16	**0.317 J**	1.77 U	1.86 U	1.91 U	1.94 U	1.62 U	**0.604 J**
Vanadium	31.9	6	78	1,000	16 / 16	13.9	11.9	24.1	25.5	20.6	29.5	22.3
Zinc	87.3	1,200	4,600	62,000	16 / 16	487	422	714	21.6	636	38.9	232

Notes:

[1] Values are from the maximum values for the background samples collected during the June 2013 sampling event.

[2] Values are from the Inactive Hazardous Sites Branch Preliminary Soil Remediation Goals (PSRG) Table (NC DENR, July 2013). For carcinogenic PAHs without PSRG, the PSRG for benzo(a)pyrene was used. For non-carcinogenic PAHs without PSRG, the PSRG for pyrene was used. For PCBs, the unrestricted use residential/industrial PSRG of 1 mg/kg was used.

[3] Sample depth is 0.0 to 0.5 foot bgs for all analytes except VOCs, for which the sample depth is 0.5 to 1 foot bgs.

Underlined text indicates exceedance of the Protection of Groundwater PSRG criteria.

Bold text indicates exceedance of Preliminary Residential Health-Based Soil Remediation Goals.

Bold box indicates exceedance of Preliminary Industrial Health-Based Soil Remediation Goals.

Shading indicates detection.

Blue text indicates exceedance of maximum background value.

bgs - below ground surface

D - Compound identified in an analysis at a secondary dilution factor

J - Analyte present below the reporting limit

mg/kg - Milligrams per kilogram

NA - Not available/not applicable

NS - Not sampled

P - Indicates a greater than 25% difference of detection between the primary and secondary column.

Q - One or more quality control criteria failed

U - The material was analyzed for, but not detected

*The highest concentration of the parent sample and duplicate sample.

TABLE 13

Subsurface Soil Results and Exceedances - 5th Street Disposal Area

Towers Road Disposal Areas Phase I RI Report

Harvey Point Defense Testing Activity

Hertford, North Carolina

Sample ID	Background Value[1]	Protection of Groundwater PSRG[2]	Residential Health-Based PSRG[2]	Industrial Health-Based	Detection Frequency	TR-5TH-SB04-04-06-0613*	TR-5TH-SB05-0.5-01-0613	TR-5TH-SB05-02-04-0613	TR-5TH-SB06-0.5-01-0613	TR-5TH-SB06-04-06-0613	5th-1-2	5th-2-1	5th-3-1	5th-4-1
Sample Date						6/17/13	6/18/13	6/18/13	6/18/13	6/18/13	1/10/12	1/10/12	1/10/12	1/10/12
Sample Depth (feet below ground surface)						4-6	0.5-1	2-4	0.5-1	4-6	8-12	8-12	8-12	8-12
Chemical Name														
Volatile Organic Compounds (mg/kg)														
1,2,3-Trichlorobenzene	NA	NA	9.8	98	1 / 16	0.0011 U	0.0011 U	0.0009 U	0.0009 U	0.001 U	ND	ND	ND	0.0195 J
1,2,4-Trichlorobenzene	NA	2.20	12	54	1 / 16	0.0011 U	0.0011 U	0.0009 U	0.0009 U	0.001 U	ND	ND	ND	0.696
1,3-Dichlorobenzene	NA	2.40	NA	NA	1 / 16	0.0011 U	0.0011 U	0.0009 U	0.0009 U	0.001 U	ND	ND	ND	0.733
1,4-Dichlorobenzene	NA	0.07	2.4	12	1 / 16	0.0011 U	0.0011 U	0.0009 U	0.0009 U	0.001 U	ND	ND	ND	1.18
2-Butanone	NA	16	5,600	28,000	5 / 16	0.0026 U	0.0028 U	0.0027 J	0.0022 U	0.0025 U	0.0243	0.00599 J	0.00892 J	ND
Acetone	NA	24	12,000	100,000	6 / 16	0.013 U	0.014 U	0.014 J	0.011 U	0.013 U	0.0856	0.0451 J	0.0406 J	0.0786 J
Benzene	NA	0.0073	1.1	5.4	1 / 16	0.0011 U	0.0011 U	0.0009 U	0.0009 U	0.001 U	ND	ND	ND	ND
Carbon disulfide	NA	3.80	160	740	1 / 16	0.0053 U	0.0057 U	0.0046 U	0.0044 U	0.0051 U	0.000812 J	ND	ND	ND
Chlorobenzene	NA	0.43	58	280	1 / 16	0.0011 U	0.0011 U	0.0009 U	0.0009 U	0.001 U	ND	ND	ND	0.102
Cyclohexane	NA	1.46	120	120	1 / 16	0.0011 U	0.0011 U	0.0009 U	0.0009 U	0.001 U	ND	ND	ND	ND
Dichlorodifluoromethane (Freon-12)	NA	29	19	80	1 / 16	0.0011 U	0.0011 U	0.0009 U	0.0009 U	0.001 U	ND	0.00303 J	ND	ND
Ethylbenzene	NA	8.10	5.4	27	1 / 16	0.0011 U	0.0011 U	0.0009 U	0.0009 U	0.001 U	ND	ND	ND	0.00749 J
Isopropylbenzene	NA	1.3	270	270	1 / 16	0.0011 U	0.0011 U	0.0009 U	0.0009 U	0.001 U	ND	ND	ND	0.00457 J
m- and p-Xylene	NA	5.8	120	390	1 / 16	0.0021 U	0.0023 U	0.0018 U	0.0017 U	0.002 U	ND	ND	ND	0.0112 J
Methyl acetate	NA	NA	16,000	29,000	1 / 16	0.0053 U	0.0057 U	0.0046 U	0.0044 U	0.0051 U	ND	ND	ND	0.100 J
Methylene chloride	NA	0.02	56	620	4 / 16	0.0053 U	0.0057 U	0.0046 U	0.0044 U	0.0051 U	0.00179 J	0.00118 J	0.000904 J	0.0262 J
Toluene	NA	5.50	820	820	2 / 16	0.0011 U	0.0011 U	0.0009 U	0.0009 U	0.001 U	ND	ND	ND	0.00873 J
Semivolatile Organic Compounds (mg/kg)														
Acenaphthene	NA	8.4	680	6,600	2 / 12	0.031 U	0.02 J	0.031 U	0.027 U	0.032 U	NA	NA	NA	NA
Acenaphthylene	NA	21	340	3,400	1 / 12	0.031 U	0.028 U	0.031 U	0.027 U	0.032 U	NA	NA	NA	NA
Anthracene	NA	660	3,400	34,000	4 / 12	0.031 U	0.028 U	0.031 U	0.027 U	0.032 U	NA	NA	NA	NA
Benzo(a)anthracene	NA	0.18	0.15	2.1	7 / 12	0.031 U	0.077	0.022 J	0.027 U	0.032 U	NA	NA	NA	NA
Benzo(a)pyrene	NA	0.059	0.015	0.21	7 / 12	0.031 U	**0.05**	**0.022 J**	0.027 U	0.032 U	NA	NA	NA	NA
Benzo(b)fluoranthene	NA	0.6	0.15	2.1	7 / 12	0.031 U	0.084	0.027 J	0.027 U	0.032 U	NA	NA	NA	NA
Benzo(g,h,i)perylene	NA	7,800	340	3,400	4 / 12	0.031 U	0.028 U	0.031 U	0.027 U	0.032 U	NA	NA	NA	NA
Benzo(k)fluoranthene	NA	5.9	1.5	21	6 / 12	0.031 U	0.048	0.031 U	0.027 U	0.032 U	NA	NA	NA	NA
bis(2-Ethylhexyl)phthalate	NA	7.2	35	120	2 / 12	0.12 U	0.11 U	0.12 U	0.11 U	0.13 U	NA	NA	NA	NA
Chrysene	NA	18	15	210	7 / 12	0.031 U	0.077	0.025 J	0.027 U	0.032 U	NA	NA	NA	NA
Dibenz(a,h)anthracene	NA	0.19	0.015	0.21	1 / 12	0.031 U	0.028 U	0.031 U	0.027 U	0.032 U	NA	NA	NA	NA
Fluoranthene	NA	330	460	4,400	7 / 12	0.031 U	0.2	0.035 J	0.027 U	0.032 U	NA	NA	NA	NA
Fluorene	NA	56	460	4,400	1 / 12	0.031 U	0.028 U	0.031 U	0.027 U	0.032 U	NA	NA	NA	NA
Indeno(1,2,3-cd)pyrene	NA	2	0.15	2.1	4 / 12	0.031 U	0.028 U	0.031 U	0.027 U	0.032 U	NA	NA	NA	NA
Phenanthrene	NA	220	340	3,400	5 / 12	0.031 U	0.21	0.031 U	0.027 U	0.032 U	NA	NA	NA	NA
Pyrene	NA	220	340	3,400	7 / 12	0.031 U	0.15	0.035 J	0.027 U	0.032 U	NA	NA	NA	NA
Pesticide/Polychlorinated Biphenyls (mg/kg)														
4,4'-DDD	NA	0.24	2	7.2	3 / 12	0.0012 U	0.031 Q	0.004	0.0011 U	0.0013 U	NA	NA	NA	NA
Aroclor-1254	NA	0.14	1	1	8 / 12	0.025 U	0.49	0.34	0.045 Q	0.025 U	NA	NA	NA	NA
Aroclor-1260	NA	0.14	1	1	10 / 12	0.023 J	0.45	0.26	0.071	0.025 UQ	NA	NA	NA	NA
Total Metals (mg/kg)														
Aluminum	32,000	NA	15,000	100,000	16 / 16	**20,700**	11,300	9,530	4,990	**20,900**	11,300	**21,600**	12,000	17,700
Antimony	NA	0.9	6.2	82	6 / 16	1.57 U	1.65 U	1.39 U	1.66 U	2.01 U	ND	0.762	1.33	3.75
Arsenic	3.74	5.8	0.61	2.4	16 / 16	**3.89**	**2.88 J**	**3.89**	**1.4 J**	**1.65 J**	**1.03**	**3.37**	**1.83**	**3.79**
Barium	134	580	3,000	38,000	16 / 16	73.4	65.2	55.9	22.3	60.9	35.3	104	73.8	66.5
Beryllium	0.64	63	32	400	16 / 16	0.507	0.275	0.294	0.122	0.391	0.0358 J	0.052 J	0.0528 J	0.0412 J
Cadmium	0.88	3	14	160	14 / 16	0.0529 J	1.21	0.949	0.0644 J	0.101 U	0.0307 J	2.1	2.29	7.35
Calcium	3,600	NA	NA	NA	16 / 16	715	1,290	2,380	1,330	1,140	891	1,730	1,590	22,800
Chromium	38.5	360,000	24,000	100,000	16 / 16	25.9	19.4	18.6	5.89	26.6	15.6	35.7	36.2	58.3
Chromium (hexavalent)	2.11	3.8	0.29	5.6	3 / 4	NS	NS	NS	NS	NS	NS	NS	NS	NS
Cobalt	4.64	0.9	4.6	60	16 / 16	4.43	2.77	3.52	0.689 J	3.29	2.47	**4.72**	3.25	3.39
Copper	441	700	620	8,200	16 / 16	17.4	134	85.6	3.1	7.66	4.8	58.9	31.1	148
Iron	14,100	150	11,000	100,000	16 / 16	**11,600**	8,980	**14,000**	2,520	8,990	6,050	**36,200**	9,920	**36,300**
Lead	47.9	270	400	800	16 / 16	29.1	152	205	7.22	7.31	6.51	243	372	**692**

TABLE 13

Subsurface Soil Results and Exceedances - 5th Street Disposal Area

Towers Road Disposal Areas Phase I RI Report

Harvey Point Defense Testing Activity

Hertford, North Carolina

Sample ID	Background Value[1]	Protection of Groundwater PSRG[2]	Residential Health-Based PSRG[2]	Industrial Health-Based	Detection Frequency	TR-5TH-SB04-04-06-0613*	TR-5TH-SB05-0.5-01-0613	TR-5TH-SB05-02-04-0613	TR-5TH-SB06-0.5-01-0613	TR-5TH-SB06-04-06-0613	5th-1-2	5th-2-1	5th-3-1	5th-4-1
Sample Date						6/17/13	6/18/13	6/18/13	6/18/13	6/18/13	1/10/12	1/10/12	1/10/12	1/10/12
Sample Depth (feet below ground surface)						4-6	0.5-1	2-4	0.5-1	4-6	8-12	8-12	8-12	8-12
Chemical Name														
Magnesium	2,600	NA	NA	NA	16 / 16	2,210	1,150	1,270	315	2,280	1,250	2,180	1,650	1,840
Manganese	412	65	360	4,600	16 / 16	104	110	106	24.5	108	53.2	141	136	235
Mercury	0.037	1	2	3.1	7 / 8	NS	NS	NS	NS	NS	0.0143	0.0512	1.64	**2.31**
Nickel	16.8	130	300	4,000	16 / 16	12.2	9.81	11.1	1.8	11.1	7.51	31.4	28.3	28.2
Potassium	765	NA	NA	NA	16 / 16	660	355	458	176	677	487	712	473	372
Silver	NA	3.4	78	1,000	4 / 16	0.391 U	0.412 U	0.347 U	0.414 U	0.503 U	ND	0.0808 J	0.0704 J	0.153
Sodium	136	NA	NA	NA	16 / 16	122	51	48.4	23.3 J	64.8	46.5	157	89.3	86.1
Thallium	1.29	0.28	0.16	2	7 / 16	1.57 U	1.65 U	1.39 U	**0.639 J**	2.01 U	0.0715 J	0.104 J	0.0821 J	0.0471 J
Vanadium	31.9	6	78	1,000	16 / 16	26	11.8	13.3	7	22.6	16.1	25.3	15.3	9.89
Zinc	87.3	1,200	4,600	62,000	16 / 16	33.1	120	115	10.3	20.8	17.6	168	343	2,550

Notes:

[1] Values are from the maximum values for the background samples collected during the June 2013 sampling event.

[2] Values are from the Inactive Hazardous Sites Branch Preliminary Soil Remediation Goals (PSRG) Table (NC DENR, July 2013). For carcinogenic PAHs without PSRG, the PSRG for benzo(a)pyrene was used. For non-carcinogenic PAHs without PSRG, the PSRG for pyrene was used. For PCBs, the unrestricted use residential/industrial PSRG of 1 mg/kg was used.

[3] Sample depth is 0.0 to 0.5 foot bgs for all analytes except VOCs, for which the sample depth is 0.5 to 1 foot bgs.

Underlined text indicates exceedance of the Protection of Groundwater PSRG criteria.

Bold text indicates exceedance of Preliminary Residential Health-Based Soil Remediation Goals.

Bold box indicates exceedance of Preliminary Industrial Health-Based Soil Remediation Goals.

Shading indicates detection.

Blue text indicates exceedance of maximum background value.

bgs - below ground surface

D - Compound identified in an analysis at a secondary dilution factor

J - Analyte present below the reporting limit

mg/kg - Milligrams per kilogram

NA - Not available/not applicable

NS - Not sampled

P - Indicates a greater than 25% difference of detection between the primary and secondary column.

Q - One or more quality control criteria failed

U - The material was analyzed for, but not detected

*The highest concentration of the parent sample and duplicate sample.

TABLE 14

Subsurface Soil COPCs - 5th Street Disposal Area

Towers Road Disposal Areas Phase I RI Report

Harvey Point Defense Testing Activity

Hertford, North Carolina

Chemical Name	Background Value[1]	Protection of Groundwater PSRG[2]	Residential Health-Based PSRG[2]	Industrial Health-Based PSRG[2]	Detection Frequency	Exceeds Protection of Groundwater PSRG	Exceeds Residential Health-Based PSRG	Exceeds Industrial Health-Based PSRG	Phase II COPC	Basis[3]
Volatile Organic Compounds (mg/kg)										
1,2,3-Trichlorobenzene	NA	NA	9.8	98	1 / 16				**yes**	D
1,2,4-Trichlorobenzene	NA	2.20	12	54	1 / 16				**yes**	D
1,3-Dichlorobenzene	NA	2.40	NA	NA	1 / 16				**yes**	D
1,4-Dichlorobenzene	NA	0.07	2.4	12	1 / 16	**yes**			**yes**	D
2-Butanone	NA	16	5,600	28,000	5 / 16				no	CLC
Acetone	NA	24	12,000	100,000	6 / 16				no	CLC
Benzene	NA	0.0073	1.1	5.4	1 / 16				**yes**	D
Carbon disulfide	NA	3.80	160	740	1 / 16				**yes**	D
Chlorobenzene	NA	0.43	58	280	1 / 16				**yes**	D
Cyclohexane	NA	1.46	120	120	1 / 16				**yes**	D
Dichlorodifluoromethane (Freon-12)	NA	29	19	80	1 / 16				**yes**	D
Ethylbenzene	NA	8.10	5.4	27	1 / 16				**yes**	D
Isopropylbenzene	NA	1.3	270	270	1 / 16				**yes**	D
m- and p-Xylene	NA	5.8	120	390	1 / 16				**yes**	D
Methyl acetate	NA	NA	16,000	29,000	1 / 16				**yes**	D
Methylene chloride	NA	0.02	56	620	4 / 16	**yes**			**yes**	SRG
Toluene	NA	5.50	820	820	1 / 16				**yes**	D
Semivolatile Organic Compounds (mg/kg)										
Acenaphthene	NA	8.4	680	6,600	2 / 12				**yes**	D
Acenaphthylene	NA	21	340	3,400	1 / 12				**yes**	D
Anthracene	NA	660	3,400	34,000	4 / 12				**yes**	D
Benzo(a)anthracene	NA	0.18	0.15	2.1	7 / 12		**yes**		**yes**	SRG
Benzo(a)pyrene	NA	0.059	0.015	0.21	7 / 12	**yes**	**yes**	**yes**	**yes**	SRG
Benzo(b)fluoranthene	NA	0.6	0.15	2.1	7 / 12		**yes**		**yes**	SRG
Benzo(g,h,i)perylene	NA	7,800	340	3,400	4 / 12				**yes**	D
Benzo(k)fluoranthene	NA	5.9	1.5	21	6 / 12				**yes**	D
bis(2-Ethylhexyl)phthalate	NA	7.2	35	120	2 / 12				no	CLC
Chrysene	NA	18	15	210	7 / 12				**yes**	D
Dibenz(a,h)anthracene	NA	0.19	0.015	0.21	1 / 12		**yes**		**yes**	SRG
Fluoranthene	NA	330	460	4,400	7 / 12				**yes**	D
Fluorene	NA	56	460	4,400	1 / 12				**yes**	D
Indeno(1,2,3-cd)pyrene	NA	2	0.15	2.1	4 / 12		**yes**		**yes**	SRG
Phenanthrene	NA	220	340	3,400	5 / 12				**yes**	D
Pyrene	NA	220	340	3,400	7 / 12				**yes**	D
Pesticide/Polychlorinated Biphenyls (mg/kg)										
4,4'-DDD	NA	0.24	2	7.2	3 / 12				**yes**	D
Aroclor-1254	NA	0.14	1	1	8 / 12	**yes**	**yes**	**yes**	**yes**	SRG
Aroclor-1260	NA	0.14	1	1	10 / 12	**yes**	**yes**	**yes**	**yes**	SRG
Total Metals (mg/kg)										
Aluminum	32,000	NA	15,000	100,000	16 / 16				no	NRS & B
Antimony	NA	0.9	6.2	82	6 / 16	**yes**	**yes**		**yes**	SRG
Arsenic	3.74	5.8	0.61	2.4	16 / 16		**yes**	**yes**	**yes**	SRG

TABLE 14

Subsurface Soil COPCs - 5th Street Disposal Area

Towers Road Disposal Areas Phase I RI Report

Harvey Point Defense Testing Activity

Hertford, North Carolina

Chemical Name	Background Value[1]	Protection of Groundwater PSRG[2]	Residential Health-Based PSRG[2]	Industrial Health-Based PSRG[2]	Detection Frequency	Exceeds Protection of Groundwater PSRG	Exceeds Residential Health-Based PSRG	Exceeds Industrial Health-Based PSRG	Phase II COPC	Basis[3]
Barium	134	580	3,000	38,000	16 / 16				**yes**	D
Beryllium	0.64	63	32	400	16 / 16				no	B
Cadmium	0.88	3	14	160	14 / 16	**yes**			**yes**	SRG
Calcium	3,600	NA	NA	NA	16 / 16				no	NUT
Chromium	38.5	360,000	24,000	100,000	16 / 16				**yes**	D
Chromium (hexavalent)	2.11	3.8	0.29	5.6	3 / 4		**yes**		no	B
Cobalt	4.64	0.9	4.6	60	16 / 16	**yes**	**yes**		**yes**	SRG
Copper	441	700	620	8,200	16 / 16				no	B
Iron	14,100	150	11,000	100,000	16 / 16	**yes**	**yes**		**yes**	SRG
Lead	47.9	270	400	800	16 / 16	**yes**	**yes**		**yes**	SRG
Magnesium	2,600	NA	NA	NA	16 / 16				no	NUT
Manganese	412	65	360	4,600	16 / 16	**yes**			no	B
Mercury	0.037	1	2	3.1	7 / 8	**yes**	**yes**		**yes**	SRG
Nickel	16.8	130	300	4,000	16 / 16				**yes**	D
Potassium	765	NA	NA	NA	16 / 16				no	NUT
Silver	NA	3.4	78	1,000	4 / 16				**yes**	D
Sodium	136	NA	NA	NA	16 / 16				no	NUT
Thallium	1.29	0.28	0.16	2	7 / 16	**yes**	**yes**		no	B
Vanadium	31.9	6	78	1,000	16 / 16	**yes**			no	B
Zinc	87.3	1,200	4,600	62,000	16 / 16	**yes**			**yes**	SRG

Notes:

[1] Values are from the maximum values for the background samples collected during the June 2013 sampling event.

[2] Values are from the Inactive Hazardous Sites Branch Preliminary Soil Remediation Goals (PSRG) Table (NC DENR, July 2013). For carcinogenic PAHs without PSRG, the PSRG for benzo(a)pyrene was used. For non-carcinogenic PAHs without PSRG, the PSRG for pyrene was used. For PCBs, the unrestricted use residential/industrial PSRG of 1 mg/kg was used.

[3] Basis:

B - Chemical was detected but is with background range

CLC - Chemical was detected but is a common laboratory contaminant detected below the regulatory standard

D - Chemical was detected outside of the background range (if applicable) and is not a common laboratory contaminant.

NRS - Chemical was detected but has no regulatory standard.

NUT - Chemical was detected but is a human nutrient with no regulatory standard

SRG - Chemical exceeds the NC Protection of Groundwater SRG or a Health-Based Preliminary SRG and, if applicable, is outside of background range

COPC

Exceeds a SRG

mg/kg - Milligrams per kilogram

NA - Not available/not applicable

TABLE 15

Background Groundwater Results

Towers Road Disposal Areas Phase I RI Report

Harvey Point Defense Testing Activity

Hertford, North Carolina

Sample ID	Minimum Detected Concentration	Maximum Detected Concentration	HPDTA-BG-MW01-0613	HPDTA-BG-MW02-0613	HPDTA-BG-MW03-0613	HPDTA-BG-MW04-0613
Sample Date			6/21/2013	6/21/2013	6/21/2013	6/21/2013
Sample Depth (feet bgs)			7-27	7-27	7-27	7-27
Chemical Name						
Total Metals (µg/L)						
Aluminum	47	601	158	601	255	47.4 J
Antimony	NA	NA	0.44 U	0.44 U	0.44 U	0.44 U
Arsenic	NA	NA	10 U	10 U	10 U	10 U
Barium	4	34	34	3.93 J	4.22 J	7.8 J
Beryllium	0.0976	0.0976	0.37 U	0.37 U	0.0976 J	0.37 U
Cadmium	NA	NA	4 U	4 U	4 U	4 U
Calcium	6,000	29,000	29,000 D	6,000	8,420	6,100
Chromium	0.75	1.29	3 U	1.29 JQ	0.75 J	3 U
Cobalt	2	7	6.2	3.89	6.75	1.83
Copper	1	3	0.767 J	0.66 J	2.39	3.44
Iron	89	629	119	629	272	89
Lead	0.271	0.271	0.6 U	0.271 J	0.6 U	0.6 U
Magnesium	3,300	9,450	9,450	3,300	4,420	3,420
Manganese	81	367	367 D	80.6	260 D	120 D
Nickel	2	6	3.33	2.56	6.48	2.32 J
Potassium	844	1,870	1,870 J	1,120 J	1,070 J	844 J
Silver		NA	0.116 U	0.116 U	0.116 U	0.116 U
Sodium	11,400	23,400	11,400 D	17,000 D	23,400 D	17,600 D
Thallium		NA	0.23 U	0.23 U	0.23 U	0.23 U
Vanadium	1	1	0.716 J	1.24 Q	1.22	0.72 J
Zinc	3	8	7.42 J	4.55 JQ	7.65 J	2.75 J
Dissolved Metals (µg/L)						
Aluminum	7.2	15.2	15.2 J	8.63 JQ	25 U	7.16 J
Antimony	NA	NA	0.44 U	0.44 U	0.44 U	0.44 U
Arsenic	NA	NA	10 U	10 U	10 U	10 U
Barium	3.9	33.6	33.6	8 U	3.88 J	7.65 J
Beryllium	NA	NA	0.37 U	0.37 U	0.37 U	0.37 U
Cadmium	NA	NA	4 U	4 U	4 U	4 U
Calcium	5,890	28,600	28,600 D	5,890 Q	8,180	6,200
Chromium	NA	NA	3 U	3 U	3 U	3 U
Cobalt	2	6	6.13	3.54 Q	6.48	1.82
Copper	1	3	3.22	1.27 Q	1.1	0.891 J
Iron	6.6	51.2	12.1 J	15 U	6.63 J	51.2
Magnesium	3,200	9,190	9,190	3,200	4,440	3,410
Manganese	73	370	370 D	73.4	260 D	122 D
Nickel	2	6	3.32	2.13 JQ	6.16	2.37 J
Potassium	841	1,850	1,850 J	1,050 J	1,050 J	841 J
Silver	NA	NA	0.116 U	0.116 U	0.116 U	0.116 U
Sodium	11,900	23,400	11,900 D	16,000 D	23,400 D	16,800 D
Thallium	NA	NA	0.23 U	0.23 U	0.23 U	0.23 U
Vanadium	0.402	0.582	0.402 J	0.8 U	0.492 J	0.582 J
Zinc	2.9	7.22	7.22 J	2.9 J	7 J	4.33 J
Field Parameters						
*Depth to Water from Measuring Point (ft)**	NA	NA	5.84	5.04	4.91	4.69
Flow Rate (L/min)	NA	NA	0.3	0.3	0.25	0.3
Volume Purged (L)	NA	NA	6	10.3	4	6
PH (pH)	NA	NA	5.65	5.74	5.74	5.73
Specific Conductivity (mS/cm)	NA	NA	0.274	0.139	0.185	0.131
Turbidity (NTU)	NA	NA	4.51	31.8	7.97	2.09
Dissolved Oxygen (mg/L)	NA	NA	2.79	0.55	1.12	1
Dissolved Oxygen by Chemets (mg/L)	NA	NA	5	0.9	1	1
Temperature (deg_C)	NA	NA	17.85	17.86	16.95	17.94
Oxidation Reduction Potential (mV)	NA	NA	169.2	155.7	172.3	130.4
Salinity (ppt)	NA	NA	0.13	0.07	0.09	0.06
Ferrous Iron (mg/L)	NA	NA	0	0	0	0

Notes:

Shading indicates detection

D - Compound identified in an analysis at a secondary dilution factor

bgs - below ground surface

J - Analyte present below the reporting limit

Q - One or more quality control criteria failed.

U - The material was analyzed for, but not detected

mg/L - Milligrams per liter

µg/L - Micrograms per liter

deg_C - Degrees centigrade

ft - Feet

L/min - Liters per minute

L - Liters

mS/cm - Millisiemens per centimeter

mV - Millivolts

NTU - Nephlometric turbidity unit

pH - PH units

ppt - parts per thousand

* - Indicates value from just before sample collection

TABLE 16

Groundwater Results and Exceedances - 2nd Street Disposal Area

Towers Road Disposal Areas Phase I RI Report

Harvey Point Defense Testing Activity

Hertford, North Carolina

Sample ID	Background Value[1]	Regulatory Standard	Regulatory Criterion[2]	Frequency of Detections	TR-2ND-MW01-0613	TR-2ND-MW02-0613	TR-2ND-SB04-GW-0613	TR-2ND-SB06-GW-0613	TR-2ND-SB07-GW-0613	2nd-1	2nd-2	2nd-3	2nd-4
Sample Type					Monitoring Well	Monitoring Well	Grab	Grab	Grab	Grab	Grab	Grab	Grab
Sample Date					6/20/13	6/20/13	6/19/13	6/19/13	6/19/13	1/10/12	1/10/12	1/10/12	1/10/12
Sample Depth (feet bgs)[3]					7-27	7-27	12-16	12-16	12-16	8-12	8-12	8-12	8-12
Chemical Name													
Volatile Organic Compounds (µg/L)													
1,1,2-Trichloro-1,2,2-trifluoroethane (Freon-113)	NA	200,000	NC2LGW	1 / 5	69	1 U	1 U	1 U	1 U	NS	NS	NS	NS
1,1-Dichloroethane	NA	6	NC2LGW	1 / 9	1 U	1 U	1 U	1 U	1 U	0.210 J	ND	ND	ND
1,2,3-Trichlorobenzene	NA	NA	NA	1 / 9	1 U	1 U	2.2 Q	1 U	1 U	ND	ND	ND	ND
1,2,4-Trichlorobenzene	NA	70	NC2LGW	1 / 9	1 U	1 U	6.4 Q	1 U	1 U	ND	ND	ND	ND
Acetone	NA	6,000	NC2LGW	4 / 9	12 U	12 U	12 U	12 U	12 U	1.55 J	2.15 J	1.63 J	1.34 J
Dichlorodifluoromethane (Freon-12)	NA	1,000	NC2LGW	3 / 9	140	12	1 U	1 U	1 U	ND	ND	4.50 J	ND
Isopropylbenzene	NA	70	NC2LGW	1 / 9	1 U	1 U	1 U	1 U	1 U	0.110 J	ND	ND	ND
Methane	NA	NA	NA	2 / 6	25.7	6.58	NS	NS	NS	ND	ND	ND	ND
Methylene chloride	NA	5	NC2LGW	4 / 9	5 U	5 U	5 U	5 U	5 U	0.540 J	0.680 J	0.550 J	0.690 J
Methyl-tert-butyl ether (MTBE)	NA	20	NC2LGW	1 / 9	1 U	1 U	1 U	1 U	1 U	1.03	ND	ND	ND
Tetrachloroethene	NA	0.7	NC2LGW	1 / 9	**2.3**	1 U	1 U	1 U	1 U	ND	ND	ND	ND
Trichlorofluoromethane (Freon-11)	NA	2,000	NC2LGW	3 / 9	580 D	18	1 U	1 U	1 U	ND	ND	0.680 J	ND
Vinyl Chloride	NA	0.03	NC2LGW	1 / 9	1 U	1 U	1 U	1 U	1 U	ND	ND	**0.180 J**	ND
Semivolatile Organic Compounds (µg/L)													
bis(2-Ethylhexyl)phthalate	NA	3	NC2LGW	2 / 5	6 U	6 U	**22**	6 U	**8.9 J**	NS	NS	NS	NS
Pesticide/Polychlorinated Biphenyls (µg/L)													
No Detections													
Total Metals (µg/L)													
Aluminum	601	NA	NA	2 / 2	204	328 Q	NS	NS	NS	NR	NR	NR	NR
Antimony	NA	1	NC GW-IMAC	1 / 2	0.122 J	0.44 U	NS	NS	NS	NR	NR	NR	NR
Arsenic	NA	10	NC2LGW	1 / 2	0.895 J	10 U	NS	NS	NS	NR	NR	NR	NR
Barium	34	700	NC2LGW	2 / 2	19.1	16.4 Q	NS	NS	NS	NR	NR	NR	NR
Calcium	29,000	NA	NA	2 / 2	44,100 D	25,700 D	NS	NS	NS	NR	NR	NR	NR
Chromium	1.29	10	NC2LGW	1 / 2	3 U	0.996 JQ	NS	NS	NS	NR	NR	NR	NR
Cobalt	6.75	1	NC GW-IMAC	2 / 2	**7.72**	**4.68 Q**	NS	NS	NS	NR	NR	NR	NR
Copper	3.44	1,000	NC2LGW	2 / 2	0.665 J	0.831 JQ	NS	NS	NS	NR	NR	NR	NR
Iron	629	300	NC2LGW	2 / 2	**351**	**310**	NS	NS	NS	NR	NR	NR	NR
Lead	0.271	15	NC2LGW	1 / 2	0.6 U	0.174 J	NS	NS	NS	NR	NR	NR	NR
Magnesium	9,450	NA	NA	2 / 2	20,100 D	11,700 D	NS	NS	NS	NR	NR	NR	NR
Manganese	367	50	NC2LGW	2 / 2	**1,080 D**	**422 D**	NS	NS	NS	NR	NR	NR	NR
Nickel	6.48	100	NC2LGW	2 / 2	5.87	3.92	NS	NS	NS	NR	NR	NR	NR
Potassium	1,870	NA	NA	2 / 2	3,210 J	2,130 J	NS	NS	NS	NR	NR	NR	NR
Sodium	23,400	NA	NA	2 / 2	46,800 D	21,200 D	NS	NS	NS	NR	NR	NR	NR
Vanadium	1.24	0.3	NC GW-IMAC	2 / 2	**1.11**	**1.03 Q**	NS	NS	NS	NR	NR	NR	NR
Zinc	7.65	1,000	NC2LGW	2 / 2	10.9 J	9.45 J	NS	NS	NS	NR	NR	NR	NR
Wet Chemistry (µg/L)													
Alkalinity	NA	NA	NA	2 / 2	150	99000	NS	NS	NS	NS	NS	NS	NS
Chloride	NA	250,000	NC2LGW	2 / 2	17	4000 J	NS	NS	NS	NS	NS	NS	NS
Nitrate	NA	10,000	NC2LGW	1 / 2	0.21 U	270 J	NS	NS	NS	NS	NS	NS	NS
Sulfate	NA	250,000	NC2LGW	2 / 2	100 D	45000	NS	NS	NS	NS	NS	NS	NS
Total organic carbon (TOC)	NA	NA	NA	2 / 2	3	1500	NS	NS	NS	NS	NS	NS	NS
General Microbial Analyses (CELLS/ML)													
No Detections													

TABLE 16

Groundwater Results and Exceedances - 2nd Street Disposal Area

Towers Road Disposal Areas Phase I RI Report

Harvey Point Defense Testing Activity

Hertford, North Carolina

Sample ID	Background Value[1]	Regulatory Standard	Regulatory Criterion[2]	Frequency of Detections	TR-2ND-MW01-0613	TR-2ND-MW02-0613	TR-2ND-SB04-GW-0613	TR-2ND-SB06-GW-0613	TR-2ND-SB07-GW-0613	2nd-1	2nd-2	2nd-3	2nd-4
Sample Type					Monitoring Well	Monitoring Well	Grab	Grab	Grab	Grab	Grab	Grab	Grab
Sample Date					6/20/13	6/20/13	6/19/13	6/19/13	6/19/13	1/10/12	1/10/12	1/10/12	1/10/12
Sample Depth (feet bgs)[3]					7-27	7-27	12-16	12-16	12-16	8-12	8-12	8-12	8-12
Chemical Name													
Field Parameters													
*Depth to Water from Measuring Point (ft)**	NA	NA	NA	NA	5.27	4.78	NS	NS	NS	NS	NS	NS	NS
Flow Rate (L/min)	NA	NA	NA	NA	0.5	0.3	NS	NS	NS	NS	NS	NS	NS
Volume Purged (L)	NA	NA	NA	NA	16	16	NS	NS	NS	NS	NS	NS	NS
PH (pH)	NA	NA	NA	NA	5.99	5.92	NS	NS	NS	NS	NS	NS	NS
Specific Conductivity (mS/cm)	NA	NA	NA	NA	0.569	0.321	NS	NS	NS	NS	NS	NS	NS
Turbidity (NTU)	NA	NA	NA	NA	12	26.4	NS	NS	NS	NS	NS	NS	NS
Dissolved Oxygen (mg/L)	NA	NA	NA	NA	0.61	3.15	NS	NS	NS	NS	NS	NS	NS
Dissolved Oxygen by Chemets (mg/L)	NA	NA	NA	NA	1	1	NS	NS	NS	NS	NS	NS	NS
Temperature (deg_C)	NA	NA	NA	NA	16.69	18.15	NS	NS	NS	NS	NS	NS	NS
Oxidation Reduction Potential (mV)	NA	NA	NA	NA	-172.7	121.3	NS	NS	NS	NS	NS	NS	NS
Salinity (ppt)	NA	NA	NA	NA	0.28	0.15	NS	NS	NS	NS	NS	NS	NS
Ferrous Iron (mg/L)	NA	NA	NA	NA	0	0	NS	NS	NS	NS	NS	NS	NS

Notes:

[1] Values are from the maximum values for the background samples collected during the June 2013 sampling event.

[2] NC2LGW values are from the North Carolina Groundwater Quality Standards (February 2012); NC GW-IMAC values are the Interim Maximum Allowable Concentrations.

[3] Samples were collected from the middle of the interval.

Bold text indicates exceedance of either the NC2L GW criteria or the NC GW-IMAC criteria.

Shading indicates detection.

Blue text indicates exceedance of maximum background value.

bgs - below ground surface

CELLS/ML - Cells per milliliter

D - Compound identified in an analysis at a secondary dilution factor

J - Analyte present below the reporting limit

NA - Not available/not applicable

ND - The material was analyzed for, but not detected. Sampled by others and reported as ND.

NR - Not Reported. 2012 groundwater samples, collected from temporary sample points by others, excluded from this report due to data uncertainty associated with the sample method of collecting metals data from a geoprobe rig. The results were noticably higher in those DPT points than in the metals samples collected from the monitoring wells.

NS - Not sampled

Q - One or more quality control criteria failed.

U - The material was analyzed for, but not detected

mg/L - Milligrams per liter

µg/L - Micrograms per liter

deg_C - Degrees centigrade

ft - Feet

L/min - Liters per minute

L - Liters

mS/cm - Millisiemens per centimeter

mV - Millivolts

NTU - Nephlometric turbidity unit

pH - PH units

ppt - parts per thousand

* - Indicates value from just before sample collection

TABLE 17

Groundwater COPCs - 2nd Street Disposal Area

Towers Road Disposal Areas Phase I RI Report

Harvey Point Defense Testing Activity

Hertford, North Carolina

Chemical Name	Background Value[1]	Regulatory Standard	Regulatory Criterion[2]	Frequency of Detections	Exceeds Regulatory Standard	Phase II COPC	Basis[3]
Volatile Organic Compounds (µg/L)							
1,1,2-Trichloro-1,2,2-trifluoroethane (Freon-113)	NA	200,000	NC2LGW	1 / 5		**yes**	D
1,1-Dichloroethane	NA	6	NC2LGW	1 / 9		**yes**	D
1,2,3-Trichlorobenzene	NA	NA	NA	1 / 9		**yes**	D
1,2,4-Trichlorobenzene	NA	70	NC2LGW	1 / 9		**yes**	D
Acetone	NA	6,000	NC2LGW	4 / 9		no	CLC
Dichlorodifluoromethane (Freon-12)	NA	1,000	NC2LGW	3 / 9		**yes**	D
Isopropylbenzene	NA	70	NC2LGW	1 / 9		**yes**	D
Methane	NA	NA	NA	2 / 6		no	NRS
Methylene chloride	NA	5	NC2LGW	4 / 9		no	CLC
Methyl-tert-butyl ether (MTBE)	NA	20	NC2LGW	1 / 9		**yes**	D
Tetrachloroethene	NA	0.7	NC2LGW	1 / 9	**yes**	**yes**	RS
Trichlorofluoromethane (Freon-11)	NA	2,000	NC2LGW	3 / 9		**yes**	D
Vinyl Chloride	NA	0.03	NC2LGW	1 / 9	**yes**	**yes**	RS
Semivolatile Organic Compounds (µg/L)							
bis(2-Ethylhexyl)phthalate	NA	3	NC2LGW	2 / 5	**yes**	**yes**	RS
Pesticide/Polychlorinated Biphenyls (µg/L)							
No Detections							
Total Metals (µg/L)							
Aluminum	601	NA	NA	2 / 2		no	NRS & B
Antimony	NA	1	NC GW-IMAC	1 / 2		**yes**	D
Arsenic	NA	10	NC2LGW	1 / 2		**yes**	D
Barium	34	700	NC2LGW	2 / 2		no	B
Calcium	29,000	NA	NA	2 / 2		no	NUT
Chromium	1.29	10	NC2LGW	1 / 2		no	B
Cobalt	6.75	1	NC GW-IMAC	2 / 2	**yes**	**yes**	RS
Copper	3.44	1,000	NC2LGW	2 / 2		no	B
Iron	629	300	NC2LGW	2 / 2		no	B
Lead	0.271	15	NC2LGW	1 / 2		no	B
Magnesium	9,450	NA	NA	2 / 2		no	NUT
Manganese	367	50	NC2LGW	2 / 2	**yes**	**yes**	RS
Nickel	6.48	100	NC2LGW	2 / 2		no	B
Potassium	1,870	NA	NA	2 / 2		no	NUT
Sodium	23,400	NA	NA	2 / 2		no	NUT
Vanadium	1.24	0.3	NC GW-IMAC	2 / 2		no	B
Zinc	7.65	1,000	NC2LGW	2 / 2		**yes**	D

Notes:

[1] Values are from the maximum values for the background samples collected during the June 2013 sampling event.

[2] NC2LGW values are from the North Carolina Groundwater Quality Standards (February 2012); NC GW-IMAC values are the Interim Maximum Allowable Concentrations.

[3] Basis:

B - Chemical was detected but is with background range

CLC - Chemical was detected but is a common laboratory contaminant detected below the regulatory standard

D - Chemical was detected outside of the background range (if applicable) and is not a common laboratory contaminant.

NRS - Chemical was detected but has no regulatory standard.

NUT - Chemical was detected but is a human nutrient with no regulatory standard

RS - Chemical exceeds the NC Regulatory Standard and, if applicable, is outside of background range

Groundwater COPC

Groundwater COPC that exceeds RS and background levels, if applicable

µg/L - Micrograms per liter

CELLS/ML - Cells per milliliter

TABLE 18

Groundwater Results and Exceedances - 5th Street Disposal Area

Towers Road Disposal Areas Phase I RI Report

Harvey Point Defense Testing Activity

Hertford, North Carolina

Sample ID	Background Value[1]	Regulatory Standard	Regulaory Criterion[2]	Frequency of Detection	TR-5TH-MW01-0613	TR-5TH-MW02-0613	TR-5TH-SB03-GW-0613	TR-5TH-SB04-GW-0613	TR-5TH-SB05-GW-0613*	TR-5TH-SB06-GW-0613	5th-1
Sample Type					Monitoring Well	Monitoring Well	Grab	Grab	Grab	Grab	Grab
Sample Date					6/20/13	6/20/13	6/17/13	6/17/13	6/18/13	6/18/13	1/10/12
Sample Depth (feet bgs)[3]					7-27	7-27	4-8	10-14	12-16	12-16	8-12
Chemical Name											
Volatile Organic Compounds (µg/L)											
1,2,3-Trichlorobenzene	NA	NA	NA	1 / 10	1 U	330 D	1 U	1 U	1 U	1 U	ND
1,2,4-Trichlorobenzene	NA	70	NC2LGW	2 / 10	1 U	**1,300 D**	1 U	1 U	1 U	1 U	ND
1,2-Dichlorobenzene	NA	20	NC2LGW	3 / 10	1 U	**210 D**	1 U	3.6	1 U	1 U	ND
1,3-Dichlorobenzene	NA	200	NC2LGW	1 / 10	1 U	52	1 U	1 U	1 U	1 U	ND
1,4-Dichlorobenzene	NA	6	NC2LGW	1 / 10	1 U	**260 D**	1 U	1 U	1 U	1 U	ND
Acetone	NA	6,000	NC2LGW	4 / 10	12 U	12 U	12 U	12 U	12 U	12 U	1.33 J
Benzene	NA	1	NC2LGW	2 / 10	1 U	**1.8 J**	1 U	1 U	1 U	1 U	ND
Chlorobenzene	NA	50	NC2LGW	3 / 10	1 U	30	1 U	1.3 J	1 U	1 U	ND
Dichlorodifluoromethane (Freon-12)	NA	1,000	NC2LGW	2 / 10	1 U	1 U	1 U	0.78 J	1 U	1 U	ND
Isopropylbenzene	NA	70	NC2LGW	1 / 10	1 U	0.96 J	1 U	1 U	1 U	1 U	ND
Methane	NA	NA	NA	2 / 2	38.6	48.8	NS	NS	NS	NS	NA
Methylene chloride	NA	5	NC2LGW	4 / 10	5 U	5 U	5 U	5 U	5 U	5 U	0.240 J
Methyl-tert-butyl ether (MTBE)	NA	20	NC2LGW	6 / 10	3.1	**270 D**	1 U	10	1 U	1 U	ND
Trichlorofluoromethane (Freon-11)	NA	2,000	NC2LGW	4 / 10	1 U	1 U	1 U	1 U	1 U	1 U	ND
Vinyl Chloride	NA	0.03	NC2LGW	5 / 10	1 U	1 U	1 U	1 U	1 U	1 U	ND
Semivolatile Organic Compounds (µg/L)											
Anthracene	NA	2,000	NC2LGW	1 / 6	0.08 U	0.08 U	0.08 U	0.2	0.08 U	0.08 U	NA
bis(2-Ethylhexyl)phthalate	NA	3	NC2LGW	3 / 6	6 U	6 U	6 U	**4.9 J**	**11**	**10**	NA
Fluorene	NA	300	NC2LGW	1 / 6	0.08 U	0.08 U	0.076 J	0.08 U	0.08 U	0.08 U	NA
Naphthalene	NA	6	NC2LGW	1 / 6	0.08 U	0.084 J	0.08 U	0.08 U	0.08 U	0.08 U	NA
Pesticide/Polychlorinated Biphenyls (µg/L)											
No Detections											
Total Metals (ug/L)											
Aluminum	601	NA	NA	2 / 2	170	2,000 D	NS	NS	NS	NS	NR
Arsenic	NA	10	NC2LGW	2 / 2	3.11 J	1.47 J	NS	NS	NS	NS	NR
Barium	34	700	NC2LGW	2 / 2	51.3	54.9	NS	NS	NS	NS	NR
Beryllium	0.0976	4	NC GW-IMAC	1 / 2	0.37 U	0.128 J	NS	NS	NS	NS	NR
Cadmium	NA	2	NC2LGW	1 / 2	4 U	0.169 J	NS	NS	NS	NS	NR
Calcium	29,000	NA	NA	2 / 2	45,600 D	39,600 D	NS	NS	NS	NS	NR
Chromium	1.29	10	NC2LGW	1 / 2	3 U	3.13 J	NS	NS	NS	NS	NR
Cobalt	6.75	1	NC GW-IMAC	2 / 2	**9.18**	**7.71**	NS	NS	NS	NS	NR
Copper	3.44	1,000	NC2LGW	2 / 2	0.621 J	4.72	NS	NS	NS	NS	NR
Iron	629	300	NC2LGW	2 / 2	**1,300 D**	**1,550 D**	NS	NS	NS	NS	NR
Lead	0.271	15	NC2LGW	1 / 2	0.6 U	0.874 J	NS	NS	NS	NS	NR
Magnesium	9,450	NA	NA	2 / 2	19,500 D	15,000 D	NS	NS	NS	NS	NR
Manganese	367	50	NC2LGW	2 / 2	**561 D**	**383 D**	NS	NS	NS	NS	NR
Nickel	6.48	100	NC2LGW	2 / 2	4.34	6.59	NS	NS	NS	NS	NR
Potassium	1,870	NA	NA	2 / 2	3,770	3,570	NS	NS	NS	NS	NR
Sodium	23,400	NA	NA	2 / 2	21,100 D	35,000 D	NS	NS	NS	NS	NR
Vanadium	1.24	0.3	NC GW-IMAC	2 / 2	**1.08**	**5.28**	NS	NS	NS	NS	NR
Zinc	7.65	1,000	NC2LGW	2 / 2	25.3	11.7 J	NS	NS	NS	NS	NR

TABLE 18

Groundwater Results and Exceedances - 5th Street Disposal Area

Towers Road Disposal Areas Phase I RI Report

Harvey Point Defense Testing Activity

Hertford, North Carolina

Sample ID	Background Value[1]	Regulatory Standard	Regulaory Criterion[2]	Frequency of Detection	TR-5TH-MW01-0613	TR-5TH-MW02-0613	TR-5TH-SB03-GW-0613	TR-5TH-SB04-GW-0613	TR-5TH-SB05-GW-0613*	TR-5TH-SB06-GW-0613	5th-1
Sample Type					Monitoring Well	Monitoring Well	Grab	Grab	Grab	Grab	Grab
Sample Date					6/20/13	6/20/13	6/17/13	6/17/13	6/18/13	6/18/13	1/10/12
Sample Depth (feet bgs)[3]					7-27	7-27	4-8	10-14	12-16	12-16	8-12
Chemical Name											
Wet Chemistry (µg/L)											
Alkalinity	NA	NA	NA	2 / 2	120,000	62000	NS	NS	NS	NS	NA
Chloride	NA	250,000	NC2LGW	2 / 2	6200	23000	NS	NS	NS	NS	NA
Sulfate	NA	250,000	NC2LGW	2 / 2	95000	120,000 D	NS	NS	NS	NS	NA
Total organic carbon (TOC)	NA	NA	NA	2 / 2	2800	4400	NS	NS	NS	NS	NA
General Microbial Analyses (CELLS/ML)											
No Detections											
Field Parameters											
*Depth to Water from Measuring Point (ft)**	NA	NA	NA	NA	5.69	7.53	NS	NS	NS	NS	NS
Flow Rate (L/min)	NA	NA	NA	NA	0.25	0.3	NS	NS	NS	NS	NS
Volume Purged (L)	NA	NA	NA	NA	9.75	5.5	NS	NS	NS	NS	NS
PH (pH)	NA	NA	NA	NA	6	5.66	NS	NS	NS	NS	NS
Specific Conductivity (mS/cm)	NA	NA	NA	NA	0.453	0.458	NS	NS	NS	NS	NS
Turbidity (NTU)	NA	NA	NA	NA	16.8	49.2	NS	NS	NS	NS	NS
Dissolved Oxygen (mg/L)	NA	NA	NA	NA	0.83	3.51	NS	NS	NS	NS	NS
Dissolved Oxygen by Chemets (mg/L)	NA	NA	NA	NA	1	2	NS	NS	NS	NS	NS
Temperature (deg_C)	NA	NA	NA	NA	17.53	17.3	NS	NS	NS	NS	NS
Oxidation Reduction Potential (mV)	NA	NA	NA	NA	61.6	139.2	NS	NS	NS	NS	NS
Salinity (ppt)	NA	NA	NA	NA	0.22	0.22	NS	NS	NS	NS	NS
Ferrous Iron (mg/L)	NA	NA	NA	NA	1.2	1.1	NS	NS	NS	NS	NS

Notes:

[1] Values are from the maximum values for the background samples collected during the June 2013 sampling event.

[2]NC2LGW values are from the North Carolina Groundwater Quality Standards (February 2012); NC GW-IMAC values are the Interim Maximum Allowable Concentrations.

[3]Samples were collected from the middle of the interval.

Bold text indicates exceedance of either the NC2L GW criteria or the NC GW-IMAC criteria.

Shading indicates detection.

Blue text indicates exceedance of maximum background value.

bgs - below ground surface

CELLS/ML - Cells per milliliter

D - Compound identified in an analysis at a secondary dilution factor

J - Analyte present below the reporting limit

NA - Not available/not applicable

ND - The material was analyzed for, but not detected. Sampled by others and reported as ND.

NR - Not Reported. 2012 groundwater samples, collected from temporary sample points by others, excluded from this report due to data uncertainty associated with sample method of collecting metals data from a geoprobe rig. The results were noticably higher in those DPT points than in the metals samples collected from the monitoring wells.

NS - Not sampled

Q - One or more quality control criteria failed.

U - The material was analyzed for, but not detected

mg/L - Milligrams per liter

µg/L - Micrograms per liter

*The highest concentration of the parent sample and duplicate sample/Indicates value from just before sample collection (Field Parameters)

deg_C - Degrees centigrade

ft - Feet

L/min - Liters per minute

L - Liters

mS/cm - Millisiemens per centimeter

mV - Millivolts

NTU - Nephlometric turbidity unit

pH - PH units

ppt - parts per thousand

TABLE 18

Groundwater Results and Exceedances - 5th Street Disposal Area

Towers Road Disposal Areas Phase I RI Report

Harvey Point Defense Testing Activity

Hertford, North Carolina

Sample ID	Background Value[1]	Regulatory Standard	Regulaory Criterion[2]	Frequency of Detection	5th-2	5th-3	5th-4
Sample Type					Grab	Grab	Grab
Sample Date					1/10/12	1/10/12	1/10/12
Sample Depth (feet bgs)[3]					8-12	8-12	8-12
Chemical Name							
Volatile Organic Compounds (µg/L)							
1,2,3-Trichlorobenzene	NA	NA	NA	1 / 10	ND	ND	ND
1,2,4-Trichlorobenzene	NA	70	NC2LGW	2 / 10	0.160 J	ND	ND
1,2-Dichlorobenzene	NA	20	NC2LGW	3 / 10	0.700 J	ND	ND
1,3-Dichlorobenzene	NA	200	NC2LGW	1 / 10	ND	ND	ND
1,4-Dichlorobenzene	NA	6	NC2LGW	1 / 10	ND	ND	ND
Acetone	NA	6,000	NC2LGW	4 / 10	1.34	1.22 J	1.15 J
Benzene	NA	1	NC2LGW	2 / 10	0.25	ND	ND
Chlorobenzene	NA	50	NC2LGW	3 / 10	0.52	ND	ND
Dichlorodifluoromethane (Freon-12)	NA	1,000	NC2LGW	2 / 10	45.6	ND	ND
Isopropylbenzene	NA	70	NC2LGW	1 / 10	ND	ND	ND
Methane	NA	NA	NA	2 / 2	NA	NA	NA
Methylene chloride	NA	5	NC2LGW	4 / 10	0.79	0.610 J	0.620 J
Methyl-tert-butyl ether (MTBE)	NA	20	NC2LGW	6 / 10	9.96	0.590 J	2.01
Trichlorofluoromethane (Freon-11)	NA	2,000	NC2LGW	4 / 10	ND	ND	ND
Vinyl Chloride	NA	0.03	NC2LGW	5 / 10	**13.6**	ND	ND
Semivolatile Organic Compounds (µg/L)							
Anthracene	NA	2,000	NC2LGW	1 / 6	NA	NA	NA
bis(2-Ethylhexyl)phthalate	NA	3	NC2LGW	3 / 6	NA	NA	NA
Fluorene	NA	300	NC2LGW	1 / 6	NA	NA	NA
Naphthalene	NA	6	NC2LGW	1 / 6	NA	NA	NA
Pesticide/Polychlorinated Biphenyls (µg/L)							
No Detections							
Total Metals (ug/L)							
Aluminum	601	NA	NA	2 / 2	NR	NR	NR
Arsenic	NA	10	NC2LGW	2 / 2	NR	NR	NR
Barium	34	700	NC2LGW	2 / 2	NR	NR	NR
Beryllium	0.0976	4	NC GW-IMAC	1 / 2	NR	NR	NR
Cadmium	NA	2	NC2LGW	1 / 2	NR	NR	NR
Calcium	29,000	NA	NA	2 / 2	NR	NR	NR
Chromium	1.29	10	NC2LGW	1 / 2	NR	NR	NR
Cobalt	6.75	1	NC GW-IMAC	2 / 2	NR	NR	NR
Copper	3.44	1,000	NC2LGW	2 / 2	NR	NR	NR
Iron	629	300	NC2LGW	2 / 2	NR	NR	NR
Lead	0.271	15	NC2LGW	1 / 2	NR	NR	NR
Magnesium	9,450	NA	NA	2 / 2	NR	NR	NR
Manganese	367	50	NC2LGW	2 / 2	NR	NR	NR
Nickel	6.48	100	NC2LGW	2 / 2	NR	NR	NR
Potassium	1,870	NA	NA	2 / 2	NR	NR	NR
Sodium	23,400	NA	NA	2 / 2	NR	NR	NR
Vanadium	1.24	0.3	NC GW-IMAC	2 / 2	NR	NR	NR
Zinc	7.65	1,000	NC2LGW	2 / 2	NR	NR	NR

TABLE 18

Groundwater Results and Exceedances - 5th Street Disposal Area

Towers Road Disposal Areas Phase I RI Report

Harvey Point Defense Testing Activity

Hertford, North Carolina

Sample ID	**Background Value[1]**	**Regulatory Standard**	**Regulaory Criterion[2]**	**Frequency of Detection**	**5th-2**	**5th-3**	**5th-4**
Sample Type					**Grab**	**Grab**	**Grab**
Sample Date					**1/10/12**	**1/10/12**	**1/10/12**
Sample Depth (feet bgs)[3]					**8-12**	**8-12**	**8-12**
Chemical Name							
Wet Chemistry (µg/L)							
Alkalinity	NA	NA	NA	2 / 2	NA	NA	NA
Chloride	NA	250,000	NC2LGW	2 / 2	NA	NA	NA
Sulfate	NA	250,000	NC2LGW	2 / 2	NA	NA	NA
Total organic carbon (TOC)	NA	NA	NA	2 / 2	NA	NA	NA
General Microbial Analyses (CELLS/ML)							
No Detections							
Field Parameters							
*Depth to Water from Measuring Point (ft)**	NA	NA	NA	NA	NS	NS	NS
Flow Rate (L/min)	NA	NA	NA	NA	NS	NS	NS
Volume Purged (L)	NA	NA	NA	NA	NS	NS	NS
PH (pH)	NA	NA	NA	NA	NS	NS	NS
Specific Conductivity (mS/cm)	NA	NA	NA	NA	NS	NS	NS
Turbidity (NTU)	NA	NA	NA	NA	NS	NS	NS
Dissolved Oxygen (mg/L)	NA	NA	NA	NA	NS	NS	NS
Dissolved Oxygen by Chemets (mg/L)	NA	NA	NA	NA	NS	NS	NS
Temperature (deg_C)	NA	NA	NA	NA	NS	NS	NS
Oxidation Reduction Potential (mV)	NA	NA	NA	NA	NS	NS	NS
Salinity (ppt)	NA	NA	NA	NA	NS	NS	NS
Ferrous Iron (mg/L)	NA	NA	NA	NA	NS	NS	NS

Notes:

[1] Values are from the maximum values for the background samples collected during the June 2013 sampling event.

[2]NC2LGW values are from the North Carolina Groundwater Quality Standards (February 2012); NC GW-IMAC values are the Interim Maximum Allowable Concentrations.

[3]Samples were collected from the middle of the interval.

Bold text indicates exceedance of either the NC2L GW criteria or the NC GW-IMAC criteria.

Shading indicates detection.

Blue text indicates exceedance of maximum background value.

bgs - below ground surface

CELLS/ML - Cells per milliliter

D - Compound identified in an analysis at a secondary dilution factor

J - Analyte present below the reporting limit

NA - Not available/not applicable

ND - The material was analyzed for, but not detected. Sampled by others and reported as ND.

NR - Not Reported. 2012 groundwater samples, collected from temporary sample points by others, excluded from this report due to data uncertainty associated with sample method of collecting metals data from a geoprobe rig. The results were noticably higher in those DPT points than in the metals samples collected from the monitoring wells.

NS - Not sampled

Q - One or more quality control criteria failed.

U - The material was analyzed for, but not detected

mg/L - Milligrams per liter

µg/L - Micrograms per liter

*The highest concentration of the parent sample and duplicate sample/Indicates value from just before sample collection (Field Parameters)

deg_C - Degrees centigrade

ft - Feet

L/min - Liters per minute

L - Liters

mS/cm - Millisiemens per centimeter

mV - Millivolts

NTU - Nephlometric turbidity unit

pH - PH units

ppt - parts per thousand

TABLE 19

Groundwater COPCs - 5th Street Disposal Area

Towers Road Disposal Areas Phase I RI Report

Harvey Point Defense Testing Activity

Hertford, North Carolina

Chemical Name	Background Value[1]	Regulatory Standard	Regulaory Criterion[2]	Frequency of Detection	Exceeds Regulatory Standard	Phase II COPC	Basis[3]
Volatile Organic Compounds (µg/L)							
1,2,3-Trichlorobenzene	NA	NA	NA	1 / 10		**yes**	D
1,2,4-Trichlorobenzene	NA	70	NC2LGW	2 / 10	**yes**	**yes**	RS
1,2-Dichlorobenzene	NA	20	NC2LGW	3 / 10	**yes**	**yes**	RS
1,3-Dichlorobenzene	NA	200	NC2LGW	1 / 10		**yes**	D
1,4-Dichlorobenzene	NA	6	NC2LGW	1 / 10	**yes**	**yes**	RS
Acetone	NA	6,000	NC2LGW	4 / 10		no	CLC
Benzene	NA	1	NC2LGW	2 / 10	**yes**	**yes**	RS
Chlorobenzene	NA	50	NC2LGW	3 / 10		**yes**	D
Dichlorodifluoromethane (Freon-12)	NA	1,000	NC2LGW	2 / 10		**yes**	D
Isopropylbenzene	NA	70	NC2LGW	1 / 10		**yes**	D
Methane	NA	NA	NA	2 / 2		**yes**	D
Methylene chloride	NA	5	NC2LGW	4 / 10		no	CLC
Methyl-tert-butyl ether (MTBE)	NA	20	NC2LGW	6 / 10	**yes**	**yes**	RS
Trichlorofluoromethane (Freon-11)	NA	2,000	NC2LGW	4 / 10		**yes**	D
Vinyl Chloride	NA	0.03	NC2LGW	5 / 10	**yes**	**yes**	RS
Semivolatile Organic Compounds (µg/L)							
Anthracene	NA	2,000	NC2LGW	1 / 6		**yes**	D
bis(2-Ethylhexyl)phthalate	NA	3	NC2LGW	3 / 6	**yes**	**yes**	RS
Fluorene	NA	300	NC2LGW	1 / 6		**yes**	D
Naphthalene	NA	6	NC2LGW	1 / 6		**yes**	D
Total Metals (ug/L)							
Aluminum	601	NA	NA	2 / 2		no	NRS
Arsenic	NA	10	NC2LGW	2 / 2		**yes**	D
Barium	34	700	NC2LGW	2 / 2		**yes**	D
Beryllium	0.0976	4	NC GW-IMAC	1 / 2		**yes**	D
Cadmium	NA	2	NC2LGW	1 / 2		no	B
Calcium	29,000	NA	NA	2 / 2		no	NUT
Chromium	1.29	10	NC2LGW	1 / 2		**yes**	D
Cobalt	6.75	1	NC GW-IMAC	2 / 2	**yes**	**yes**	RS
Copper	3.44	1,000	NC2LGW	2 / 2		**yes**	D
Iron	629	300	NC2LGW	2 / 2	**yes**	**yes**	RS
Lead	0.271	15	NC2LGW	1 / 2		**yes**	D
Magnesium	9,450	NA	NA	2 / 2		no	NUT
Manganese	367	50	NC2LGW	2 / 2	**yes**	**yes**	RS
Nickel	6.48	100	NC2LGW	2 / 2		**yes**	D
Potassium	1,870	NA	NA	2 / 2		no	NUT
Sodium	23,400	NA	NA	2 / 2		no	NUT
Vanadium	1.24	0.3	NC GW-IMAC	2 / 2	**yes**	**yes**	RS
Zinc	7.65	1,000	NC2LGW	2 / 2		**yes**	D

Notes:

[1] Values are from the maximum values for the background samples collected during the June 2013 sampling event.

[2] NC2LGW values are from the North Carolina Groundwater Quality Standards (February 2012); NC GW-IMAC values are

[3]Basis:

B - Chemical was detected but is with background range

CLC - Chemical was detected but is a common laboratory contaminant detected below the regulatory standard

D - Chemical was detected outside of the background range (if applicable) and is not a common laboratory

NRS - Chemical was detected but has no regulatory standard.

NUT - Chemical was detected but is a human nutrient with no regulatory standard

RS - Chemical exceeds the NC Regulatory Standard and, if applicable, is outside of background range

Groundwater COPC

Groundwater COPC that exceeds RS and background leves, if applicable

µg/L - Micrograms per liter

CELLS/ML - Cells per milliliter

TABLE 20

Adjusted Soil Remediation Goals - 2nd Street Disposal Area Surface Soil

Harvey Point Defense Testing Activity

Hertford, North Carolina

Analyte	CAS	Carcinogen (C) or Noncarcinogen (N)	Target Organ	Residential		Industrial	
				Preliminary Residential Health-Based Soil Remediation Goals (PSRG)[1] (MG/KG)	Adjusted Residential Health-Based Soil Remediation Goals (SRG)[2] (MG/KG)	Preliminary Industrial Health-Based Soil Remediation Goals (PSRG)[1] (MG/KG)	Adjusted Industrial Health-Based Soil Remediation Goals (SRG)[2] (MG/KG)
Chemical Name							
Semivolatile Organic Compounds (MG/KG)							
2-Methylnaphthalene	91-57-6	N	Lung	4.6E+01	2.3E+02	3.7E+02	1.9E+03
Acenaphthene	83-32-9	N	Liver	6.8E+02	1.7E+03	6.6E+03	1.7E+04
Acenaphthylene	208-96-8	N	Kidney	3.4E+02	3.4E+02	3.4E+03	3.4E+03
Anthracene	120-12-7	N	NOE	3.4E+03	1.7E+04	3.4E+04	1.7E+05
Benzo(a)anthracene	56-55-3	C	N/A	1.5E-01	1.2E+00	2.1E+00	1.6E+01
Benzo(a)pyrene	50-32-8	C	N/A	1.5E-02	1.2E-01	2.1E-01	1.6E+00
Benzo(b)fluoranthene	205-99-2	C	N/A	1.5E-01	1.2E+00	2.1E+00	1.6E+01
Benzo(g,h,i)perylene	191-24-2	N	Kidney	3.4E+02	3.4E+02	3.4E+03	3.4E+03
Benzo(k)fluoranthene	207-08-9	C	N/A	1.5E+00	1.2E+01	2.1E+01	1.6E+02
Chrysene	218-01-9	C	N/A	1.5E+01	1.2E+02	2.1E+02	1.6E+03
Dibenz(a,h)anthracene	53-70-3	C	N/A	1.5E-02	1.2E-01	2.1E-01	1.6E+00
Fluoranthene	206-44-0	N	Kidney, Liver, Blood	4.6E+02	4.6E+02	4.4E+03	4.4E+03
Fluorene	86-73-7	N	Blood	4.6E+02	5.8E+02	4.4E+03	5.5E+03
Indeno(1,2,3-cd)pyrene	193-39-5	C	N/A	1.5E-01	1.2E+00	2.1E+00	1.6E+01
Naphthalene	91-20-3	N/C	Body Weight	3.6E+00	2.8E+01	1.8E+01	1.4E+02
Phenanthrene	85-01-8	N	Kidney	3.4E+02	3.4E+02	3.4E+03	3.4E+03
Pyrene	129-00-0	N	Kidney	3.4E+02	3.4E+02	3.4E+03	3.4E+03
Pesticide/Polychlorinated Biphenyls (MG/KG)							
Aroclor-1254	11097-69-1	N/C	Ocular, Finger and Toe Nails, Antibodies	1.0E+00	1.0E+00	1.0E+00	1.0E+00
Aroclor-1260	11096-82-5	C	N/A	1.0E+00	1.0E+00	1.0E+00	1.0E+00
Total Metals (MG/KG)							
Antimony	7440-36-0	N	Blood, Longevity	6.2E+00	7.8E+00	8.2E+01	1.0E+02
Arsenic	7440-38-2	N/C	Skin, Vascular	6.1E-01	4.7E+00	2.4E+00	1.8E+01
Barium	7440-39-3	N	Kidney	3.0E+03	3.0E+03	3.8E+04	3.8E+04
Cadmium	7440-43-9	N/C	Kidney	1.4E+01	1.4E+01	1.6E+02	1.6E+02
Chromium	7440-47-3	N	NOE	2.4E+04	1.2E+05	1.0E+05	5.0E+05
Cobalt	7440-48-4	N	Thyroid	4.6E+00	2.3E+01	6.0E+01	3.0E+02
Copper	7440-50-8	N	Gastrointestinal	6.2E+02	1.6E+03	8.2E+03	2.1E+04
Iron	7439-89-6	N	Gastrointestinal	1.1E+04	2.8E+04	1.0E+05	2.5E+05
Lead	7439-92-1	N/A	N/A	4.0E+02	4.0E+02	8.0E+02	8.0E+02
Mercury	7439-97-6	N	Immune System	4.6E+00	2.3E+01	6.2E+01	3.1E+02

TABLE 20

Adjusted Soil Remediation Goals - 2nd Street Disposal Area Surface Soil

Harvey Point Defense Testing Activity

Hertford, North Carolina

Analyte	CAS	Carcinogen (C) or Noncarcinogen (N)	Target Organ	Residential		Industrial	
				Preliminary Residential Health-Based Soil Remediation Goals (PSRG)[1] (MG/KG)	Adjusted Residential Health-Based Soil Remediation Goals (SRG)[2] (MG/KG)	Preliminary Industrial Health-Based Soil Remediation Goals (PSRG)[1] (MG/KG)	Adjusted Industrial Health-Based Soil Remediation Goals (SRG)[2] (MG/KG)
Nickel	7440-02-0	N	Decreased Body and Organ Weights	3.0E+02	7.5E+02	4.0E+03	1.0E+04
Silver	7440-22-4	N	Skin	7.8E+01	2.0E+02	1.0E+03	2.5E+03
Zinc	7440-66-6	N	Blood	4.6E+03	5.8E+03	6.2E+04	7.8E+04

Notes:

[1] Values are from the Inactive Hazardous Sites Branch Preliminary Soil Remediation Goals (PSRG) Table (NC DENR, July 2013).
Values for chromium(III) used for chromium since hexavalent chromium not detected.

[2] Values are from the Inactive Hazardous Sites Branch Preliminary Soil Remediation Goals (PSRG) Table (NC DENR, July 2013). Values are adjusted as follows:

Cancer based PSRG adjustment

adjusted SRG = PSRG x 100/number of carcinogens = PSRG x 100/13 = PSRG x 7.7

Non-cancer based PSRG adjustment

adjusted SRG = PSRG x 5/number of non-carcinogens with same target organ; however, when > 5 chemicals effect same target organ then SRG=PSRG

MG/KG - Milligrams per kilogram
N/A - not available/not applicable
NOE - No observed effect

TABLE 21

Adjusted Soil Remediation Goals - 2nd Street Disposal Area Subsurface Soil

Harvey Point Defense Testing Activity

Hertford, North Carolina

Analyte	CAS	Carcinogen (C) or Noncarcinogen (N)	Target Organ	Residential		Industrial	
				Preliminary Residential Health-Based Soil Remediation Goals (PSRG)[1] (MG/KG)	Adjusted Residential Health-Based Soil Remediation Goals (SRG)[2] (MG/KG)	Preliminary Industrial Health-Based Soil Remediation Goals (PSRG)[1] (MG/KG)	Adjusted Industrial Health-Based Soil Remediation Goals (SRG)[2] (MG/KG)
Chemical Name							
Volatile Organic Compounds (MG/KG)							
Benzene	71-43-2	N/C	Blood	1.1E+00	7.3E+00	5.4E+00	3.6E+01
Bromomethane	74-83-9	N	Stomach (Gastrointestinal)	1.5E+00	3.8E+00	6.4E+00	1.6E+01
Chloroform	67-66-3	N/C	Liver	2.9E-01	1.9E+00	1.5E+00	1.0E+01
Chloromethane	74-87-3	N	Liver	2.4E+01	2.4E+01	1.0E+02	1.0E+02
Dichlorodifluoromethane (Freon-12)	75-71-8	N	Body Weight	1.9E+01	1.9E+01	8.0E+01	1.0E+02
Ethylbenzene	100-41-4	N/C	Liver, Kidney	5.4E+00	3.6E+01	2.7E+01	1.8E+02
Isopropylbenzene	98-82-8	N	Kidney	2.7E+02	2.7E+02	2.7E+02	2.7E+02
m- and p-Xylene	m&pXYLENE	N	Body Weight, Mortality	1.2E+02	1.2E+02	3.9E+02	3.9E+02
o-Xylene	95-47-6	N	Body Weight, Mortality	1.4E+02	1.4E+02	4.3E+02	4.3E+02
Styrene	100-42-5	N	Blood, Liver	8.7E+02	8.7E+02	8.7E+02	8.7E+02
Toluene	108-88-3	N	Kidney	8.2E+02	8.2E+02	8.2E+02	8.2E+02
Trichlorofluoromethane (Freon-11)	75-69-4	N	Lifetime	1.6E+02	1.6E+02	6.8E+02	6.8E+02
Xylene, total	1330-20-7	N	Body Weight, Mortality	1.3E+02	1.3E+02	2.6E+02	2.6E+02
Semivolatile Organic Compounds (MG/KG)							
2-Methylnaphthalene	91-57-6	N	Lung	4.6E+01	2.3E+02	3.7E+02	1.9E+03
Acenaphthene	83-32-9	N	Liver	6.8E+02	6.8E+02	6.6E+03	6.6E+03
Acenaphthylene	208-96-8	N	Kidney	3.4E+02	3.4E+02	3.4E+03	3.4E+03
Anthracene	120-12-7	N	NOE	3.4E+03	1.7E+04	3.4E+04	1.7E+05
Benzo(a)anthracene	56-55-3	C	N/A	1.5E-01	1.0E+00	2.1E+00	1.4E+01
Benzo(a)pyrene	50-32-8	C	N/A	1.5E-02	1.0E-01	2.1E-01	1.4E+00
Benzo(b)fluoranthene	205-99-2	C	N/A	1.5E-01	1.0E+00	2.1E+00	1.4E+01
Benzo(g,h,i)perylene	191-24-2	N	Kidney	3.4E+02	3.4E+02	3.4E+03	3.4E+03
Benzo(k)fluoranthene	207-08-9	C	N/A	1.5E+00	1.0E+01	2.1E+01	1.4E+02
Chrysene	218-01-9	C	N/A	1.5E+01	1.0E+02	2.1E+02	1.4E+03
Dibenz(a,h)anthracene	53-70-3	C	N/A	1.5E-02	1.0E-01	2.1E-01	1.4E+00
Dibenzofuran	132-64-9	N	Kidney	1.6E+01	1.6E+01	1.7E+02	1.7E+02
Fluoranthene	206-44-0	N	Kidney, Liver, Blood	4.6E+02	4.6E+02	4.4E+03	4.4E+03
Fluorene	86-73-7	N	Blood	4.6E+02	4.6E+02	4.4E+03	4.4E+03
Indeno(1,2,3-cd)pyrene	193-39-5	C	N/A	1.5E-01	1.0E+00	2.1E+00	1.4E+01
Naphthalene	91-20-3	N/C	Body Weight	3.6E+00	2.4E+01	1.8E+01	1.2E+02
Phenanthrene	85-01-8	N	Kidney	3.4E+02	3.4E+02	3.4E+03	3.4E+03
Pyrene	129-00-0	N	Kidney	3.4E+02	3.4E+02	3.4E+03	3.4E+03

TABLE 21

Adjusted Soil Remediation Goals - 2nd Street Disposal Area Subsurface Soil

Harvey Point Defense Testing Activity

Hertford, North Carolina

Analyte	CAS	Carcinogen (C) or Noncarcinogen (N)	Target Organ	Residential		Industrial	
				Preliminary Residential Health-Based Soil Remediation Goals (PSRG)[1] (MG/KG)	Adjusted Residential Health-Based Soil Remediation Goals (SRG)[2] (MG/KG)	Preliminary Industrial Health-Based Soil Remediation Goals (PSRG)[1] (MG/KG)	Adjusted Industrial Health-Based Soil Remediation Goals (SRG)[2] (MG/KG)
Pesticide/Polychlorinated Biphenyls (MG/KG)							
Aroclor-1254	11097-69-1	N/C	Ocular, Finger and Toe Nails, Antibodies	1.0E+00	1.0E+00	1.0E+00	1.0E+00
Aroclor-1260	11096-82-5	C	N/A	1.0E+00	1.0E+00	1.0E+00	1.0E+00
Total Metals (MG/KG)							
Antimony	7440-36-0	N	Blood, Longevity	6.2E+00	6.2E+00	8.2E+01	8.2E+01
Arsenic	7440-38-2	N/C	Skin, Vascular	6.1E-01	4.1E+00	2.4E+00	1.6E+01
Barium	7440-39-3	N	Kidney	3.0E+03	3.0E+03	3.8E+04	3.8E+04
Cadmium	7440-43-9	N/C	Kidney	1.4E+01	1.4E+01	1.6E+02	1.6E+02
Chromium	7440-47-3	N	None Reported	2.4E+04	1.2E+05	1.0E+05	5.0E+05
Cobalt	7440-48-4	N	Thyroid	4.6E+00	2.3E+01	6.0E+01	3.0E+02
Iron	7439-89-6	N	Gastrointestinal	1.1E+04	2.8E+04	1.0E+05	2.5E+05
Lead	7439-92-1	N/A	N/A	4.0E+02	4.0E+02	8.0E+02	8.0E+02
Manganese	7439-96-5	N	CNS	3.6E+02	1.8E+03	4.6E+03	2.3E+04
Mercury	7439-97-6	N	Autoimmune	4.6E+00	2.3E+01	6.2E+01	3.1E+02
Nickel	7440-02-0	N	Decreased Body and Organ Weights	3.0E+02	3.0E+02	4.0E+03	4.0E+03
Silver	7440-22-4	N	Skin	7.8E+01	2.0E+02	1.0E+03	2.5E+03
Vanadium	7440-62-2	N	Kidney	7.8E+01	7.8E+01	1.0E+03	1.0E+03
Zinc	7440-66-6	N	Blood	4.6E+03	4.6E+03	6.2E+04	6.2E+04

Notes:

[1] Values are from the Inactive Hazardous Sites Branch Preliminary Soil Remediation Goals (PSRG) Table (NC DENR, July 2013).

Values for chromium(III) used total for chromium since also analyzed for hexavalent chromium.

[2] Values are from the Inactive Hazardous Sites Branch Preliminary Soil Remediation Goals (PSRG) Table (NC DENR, July 2013). Values are adjusted as follows:

Cancer based PSRG adjustment

adjusted SRG = PSRG x 100/number of carcinogens = PSRG x 100/15 = PSRG x 6.7

Non-cancer based PSRG adjustment

adjusted SRG = PSRG x 5/number of non-carcinogens with same target organ; however, when > 5 chemicals effect same target organ then SRG=PSRG

MG/KG - Milligrams per kilogram

N/A - Not available/Not applicable

NOE - No observed effect

TABLE 22

Adjusted Soil Remediation Goals - 5th Street Disposal Area Surface Soil

Harvey Point Defense Testing Activity

Hertford, North Carolina

Analyte	CAS	Carcinogen (C) or Noncarcinogen (N)	Target Organ	Residential		Industrial	
				Preliminary Residential Health-Based Soil Remediation Goals (PSRG)[1] (MG/KG)	Adjusted Residential Health-Based Soil Remediation Goals (SRG)[2] (MG/KG)	Preliminary Industrial Health-Based Soil Remediation Goals (PSRG)[1] (MG/KG)	Adjusted Industrial Health-Based Soil Remediation Goals (SRG)[2] (MG/KG)
Chemical Name							
Volatile Organic Compounds (MG/KG)							
Benzene	71-43-2	N/C	Blood	1.1E+00	8.5E+00	5.4E+00	4.2E+01
Styrene	100-42-5	N	Blood, Liver	8.7E+02	8.7E+02	8.7E+02	8.7E+02
Semivolatile Organic Compounds (MG/KG)							
Acenaphthene	83-32-9	N	Liver	6.8E+02	1.1E+03	6.6E+03	1.1E+04
Acenaphthylene	208-96-8	N	Kidney	3.4E+02	3.4E+02	3.4E+03	3.4E+03
Anthracene	120-12-7	N	NOE	3.4E+03	1.7E+04	3.4E+04	1.7E+05
Benzo(a)anthracene	56-55-3	C	N/A	1.5E-01	1.2E+00	2.1E+00	1.6E+01
Benzo(a)pyrene	50-32-8	C	N/A	1.5E-02	1.2E-01	2.1E-01	1.6E+00
Benzo(b)fluoranthene	205-99-2	C	N/A	1.5E-01	1.2E+00	2.1E+00	1.6E+01
Benzo(g,h,i)perylene	191-24-2	N	Kidney	3.4E+02	3.4E+02	3.4E+03	3.4E+03
Benzo(k)fluoranthene	207-08-9	C	N/A	1.5E+00	1.2E+01	2.1E+01	1.6E+02
Carbazole	86-74-8	C	N/A	2.4E+01	1.9E+02	1.4E+02	1.1E+03
Chrysene	218-01-9	C	N/A	1.5E+01	1.2E+02	2.1E+02	1.6E+03
Dibenz(a,h)anthracene	53-70-3	C	N/A	1.5E-02	1.2E-01	2.1E-01	1.6E+00
Dibenzofuran	132-64-9	N	Body Weight	1.6E+01	8.0E+01	1.7E+02	8.5E+02
Fluoranthene	206-44-0	N	Kidney, Liver, Blood	4.6E+02	4.6E+02	4.4E+03	4.4E+03
Fluorene	86-73-7	N	Blood	4.6E+02	4.6E+02	4.4E+03	4.4E+03
Indeno(1,2,3-cd)pyrene	193-39-5	C	N/A	1.5E-01	1.2E+00	2.1E+00	1.6E+01
Phenanthrene	85-01-8	N	Kidney	3.4E+02	3.4E+02	3.4E+03	3.4E+03
Pyrene	129-00-0	N	Kidney	3.4E+02	3.4E+02	3.4E+03	3.4E+03
Pesticide/Polychlorinated Biphenyls (MG/KG)							
Aroclor-1254	11097-69-1	N/C	Ocular, Finger and Toe Nails, Antibodies	1.0E+00	1.0E+00	1.0E+00	1.0E+00
Aroclor-1260	11096-82-5	C	N/A	1.0E+00	1.0E+00	1.0E+00	1.0E+00
Total Metals (MG/KG)							
Antimony	7440-36-0	N	Blood, Longevity	6.2E+00	6.2E+00	8.2E+01	8.2E+01
Arsenic	7440-38-2	N/C	Skin, Vascular	6.1E-01	4.7E+00	2.4E+00	1.8E+01
Cadmium	7440-43-9	N/C	Kidney	1.4E+01	1.4E+01	1.6E+02	1.6E+02

TABLE 22

Adjusted Soil Remediation Goals - 5th Street Disposal Area Surface Soil

Harvey Point Defense Testing Activity

Hertford, North Carolina

Analyte	CAS	Carcinogen (C) or Noncarcinogen (N)	Target Organ	Residential		Industrial	
				Preliminary Residential Health-Based Soil Remediation Goals (PSRG)[1] (MG/KG)	Adjusted Residential Health-Based Soil Remediation Goals (SRG)[2] (MG/KG)	Preliminary Industrial Health-Based Soil Remediation Goals (PSRG)[1] (MG/KG)	Adjusted Industrial Health-Based Soil Remediation Goals (SRG)[2] (MG/KG)
Iron	7439-89-6	N	Gastrointestinal	1.1E+04	5.5E+04	1.0E+05	5.0E+05
Lead	7439-92-1	N/A	N/A	4.0E+02	4.0E+02	8.0E+02	8.0E+02
Mercury	7439-97-6	N	Autoimmune	4.6E+00	2.3E+01	6.2E+01	3.1E+02
Zinc	7440-66-6	N	Blood	4.6E+03	4.6E+03	6.2E+04	6.2E+04

Notes:

[1] Values are from the Inactive Hazardous Sites Branch Preliminary Soil Remediation Goals (PSRG) Table (NC DENR, July 2013).

Screening values for chromium(III) used total for chromium since also analyzed for hexavalent chromium.

Screening value for carbazole calculated using RSL calculator, and oral cancer slope factor of 2.0E-02 (mg/kg-day)[1] from USEPA's Health Affects Assessment Summary Tables, July 2007.

[2] Values are from the Inactive Hazardous Sites Branch Preliminary Soil Remediation Goals (PSRG) Table (NC DENR, July 2013). Values are adjusted as follows:

Cancer based PSRG adjustment

adjusted SRG = PSRG x 100/number of carcinogens = PSRG x 100/15 = PSRG x 6.7

Non-cancer based PSRG adjustment

adjusted SRG = PSRG x 5/number of non-carcinogens with same target organ; however, when > 5 chemicals effect same target organ then SRG=PSRG

MG/KG - Milligrams per kilogram

N/A - not available/not applicable

NOE - No observed effect

TABLE 23
Adjusted Soil Remediation Goals - 5th Street Disposal Area Subsurface Soil
Harvey Point Defense Testing Activity
Hertford, North Carolina

Analyte	CAS	Carcinogen (C) or Noncarcinogen (N)	Target Organ	Residential		Industrial	
				Preliminary Residential Health-Based Soil Remediation Goals (PSRG)[1] (MG/KG)	Adjusted Residential Health-Based Soil Remediation Goals (SRG)[2] (MG/KG)	Preliminary Industrial Health-Based Soil Remediation Goals (PSRG)[1] (MG/KG)	Adjusted Industrial Health-Based Soil Remediation Goals (SRG)[2] (MG/KG)
Volatile Organic Compounds (MG/KG)							
1,2,3-Trichlorobenzene	87-61-6	N	Body Weight, Liver, Thyroid	9.8E+00	9.8E+00	9.8E+01	9.8E+01
1,2,4-Trichlorobenzene	120-82-1	N/C	Adrenal, Urinary	1.2E+01	6.0E+01	5.4E+01	2.7E+02
1,3-Dichlorobenzene	541- 73-1			N/A	N/A	NA	N/A
1,4-Dichlorobenzene	106-46-7	N/C	Liver	2.4E+00	1.3E+01	1.2E+01	6.7E+01
Benzene	71-43-2	N/C	Blood	1.1E+00	6.1E+00	5.4E+00	3.0E+01
Carbon disulfide	75-15-0	N	Fetal	1.6E+02	8.0E+02	7.4E+02	3.7E+03
Chlorobenzene	108-90-7	N	Liver, Kidney	5.8E+01	5.8E+01	2.8E+02	2.8E+02
Cyclohexane	110-82-7	N	N/A	1.2E+02	6.0E+02	1.2E+02	6.0E+02
Dichlorodifluoromethane (Freon-12)	75-71-8	N	Reduced Body Weight	1.9E+01	2.4E+01	8.0E+01	1.0E+02
Ethylbenzene	100-41-4	N/C	Liver, Kidney	5.4E+00	3.0E+01	2.7E+01	1.5E+02
Isopropylbenzene	98-82-8	N	Kidney	2.7E+02	2.7E+02	2.7E+02	2.7E+02
m- and p-Xylene		N	Body Weight, Mortality	1.2E+02	1.5E+02	3.9E+02	4.9E+02
Methyl acetate	79-20-9	N	Blood, Brain	1.6E+04	1.6E+04	2.9E+04	2.9E+04
Methylene chloride	75-09-2	N/C	Liver	5.6E+01	7.0E+01	6.2E+02	6.2E+02
Toluene	108-88-3	N	Kidney	8.2E+02	8.2E+02	8.2E+02	8.2E+02
Semivolatile Organic Compounds MG/KG)							
Acenaphthene	83-32-9	N	Liver	6.8E+02	6.8E+02	6.6E+03	6.6E+03
Acenaphthylene	208-96-8	N	Kidney	3.4E+02	3.4E+02	3.4E+03	3.4E+03
Anthracene	120-12-7	N	NOE	3.4E+03	1.7E+04	3.4E+04	1.7E+05
Benzo(a)anthracene	56-55-3	C	N/A	1.5E-01	8.3E-01	2.1E+00	1.2E+01
Benzo(a)pyrene	50-32-8	C	N/A	1.5E-02	8.3E-02	2.1E-01	1.2E+00
Benzo(b)fluoranthene	205-99-2	C	N/A	1.5E-01	8.3E-01	2.1E+00	1.2E+01
Benzo(g,h,i)perylene	191-24-2	N	Kidney	3.4E+02	3.4E+02	3.4E+03	3.4E+03
Benzo(k)fluoranthene	207-08-9	C	N/A	1.5E+00	8.3E+00	2.1E+01	1.2E+02
Chrysene	218-01-9	C	N/A	1.5E+01	8.3E+01	2.1E+02	1.2E+03
Dibenz(a,h)anthracene	53-70-3	C	N/A	1.5E-02	8.3E-02	2.1E-01	1.2E+00
Fluoranthene	206-44-0	N	Kidney, Liver, Blood	4.6E+02	4.6E+02	4.4E+03	4.4E+03
Fluorene	86-73-7	N	Blood	4.6E+02	4.6E+02	4.4E+03	4.4E+03
Indeno(1,2,3-cd)pyrene	193-39-5	C	N/A	1.5E-01	8.3E-01	2.1E+00	1.2E+01
Phenanthrene	85-01-8	N	Kidney	3.4E+02	3.4E+02	3.4E+03	3.4E+03
Pyrene	129-00-0	N	Kidney	3.4E+02	3.4E+02	3.4E+03	3.4E+03

TABLE 23

Adjusted Soil Remediation Goals - 5th Street Disposal Area Subsurface Soil

Harvey Point Defense Testing Activity

Hertford, North Carolina

Analyte	CAS	Carcinogen (C) or Noncarcinogen (N)	Target Organ	Residential		Industrial	
				Preliminary Residential Health-Based Soil Remediation Goals (PSRG)[1] (MG/KG)	Adjusted Residential Health-Based Soil Remediation Goals (SRG)[2] (MG/KG)	Preliminary Industrial Health-Based Soil Remediation Goals (PSRG)[1] (MG/KG)	Adjusted Industrial Health-Based Soil Remediation Goals (SRG)[2] (MG/KG)
Pesticide/Polychlorinated Biphenyls (MG/KG)							
4,4'-DDD	72-54-8	C	N/A	2.0E+00	1.1E+01	7.2E+00	4.0E+01
Aroclor-1254	11097-69-1	N/C	Ocular, Finger and Toe Nails, Antibodies	1.0E+00	1.0E+00	1.0E+00	1.0E+00
Aroclor-1260	11096-82-5	C	N/A	1.0E+00	1.0E+00	1.0E+00	1.0E+00
Total Metals (MG/KG)							
Antimony	7440-36-0	N	Blood, Longevity	6.2E+00	6.2E+00	8.2E+01	8.2E+01
Arsenic	7440-38-2	N/C	Skin, Vascular	6.1E-01	3.4E+00	2.4E+00	1.3E+01
Barium	7440-39-3	N	Kidney	3.0E+03	3.0E+03	3.8E+04	3.8E+04
Cadmium	7440-43-9	N/C	Kidney	1.4E+01	1.4E+01	1.6E+02	1.6E+02
Chromium	7440-47-3	N	None Reported	2.4E+04	1.2E+05	1.0E+05	5.0E+05
Cobalt	7440-48-4	N	Thyroid	4.6E+00	1.2E+01	6.0E+01	1.5E+02
Iron	7439-89-6	N	Gastrointestinal	1.1E+04	5.5E+04	1.0E+05	5.0E+05
Lead	7439-92-1	N/A	N/A	4.0E+02	4.0E+02	8.0E+02	8.0E+02
Mercury	7439-97-6	N	Autoimmune	4.6E+00	2.3E+01	6.2E+01	3.1E+02
Nickel	7440-02-0	N	Decreased Body and Organ Weights	3.0E+02	3.8E+02	4.0E+03	5.0E+03
Silver	7440-22-4	N	Skin	7.8E+01	2.0E+02	1.0E+03	2.5E+03
Zinc	7440-66-6	N	Blood	4.6E+03	4.6E+03	6.2E+04	6.2E+04

Notes:

[1] Values are from the Inactive Hazardous Sites Branch Preliminary Soil Remediation Goals (PSRG) Table (NC DENR, July 2013).

Screening values for chromium(III) used total for chromium since also analyzed for hexavalent chromium.

Average lead concentration used for screening because average concentration would be used in lead model.

[2] Values are from the Inactive Hazardous Sites Branch Preliminary Soil Remediation Goals (PSRG) Table (NC DENR, July 2013). Values are adjusted as follows:

Cancer based PSRG adjustment

adjusted SRG = PSRG x 100/number of carcinogens = PSRG x 100/18 = PSRG x 5.6

Non-cancer based PSRG adjustment

adjusted SRG = PSRG x 5/number of non-carcinogens with same target organ; however, when > 5 chemicals effect same target organ then SRG=PSRG

MG/KG - Milligrams per kilogram

N/A - Not available/Not applicable

NOE - No observed effect

TABLE 24

Preliminary Remediation Goals - 2nd Street Disposal Area

Towers Road Disposal Areas Phase I RI Report

Harvey Point Defense Testing Activity

Hertford, North Carolina

Contaminants of Potential Concern	Background	Surface Soil			Subsurface Soil			Background	Groundwater
	Maximum Soil Concentration (mg/kg)	Protection of Groundwater Soil Remediation Goal (mg/kg)	Adjusted Residential Health-Based Soil Remediation Goal (mg/kg)	Adjusted Industrial Health-Based Soil Remediation Goal (mg/kg)	Protection of Groundwater Soil Remediation Goal (mg/kg)	Adjusted Residential Health-Based Soil Remediation Goal (mg/kg)	Adjusted Industrial Health-Based Soil Remediation Goal (mg/kg)	Maximum Groundwater Concentration (µg/L)	Regulatory Standard (µg/L)
VOCs									
1,1,2-Trichloro-1,2,2-trifluoroethane (Freon-113)									200,000
1,1-Dichloroethane									6
1,2,3-Trichlorobenzene									TBD
1,2,4-Trichlorobenzene									70
Benzene						7.3	36		
Bromomethane						3.8	16		
Chloroform						1.9	10		
Chloromethane						24	100		
Dichlorodifluoromethane (Freon-12)					29	19	100		
Ethylbenzene						36	180		
Isopropylbenzene						270	270		70
m- and p-Xylene						120	390		
Methyl-tert-butyl ether (MTBE)									20
o-Xylene						140	430		
Styrene						870	870		
Tetrachloroethene									0.7
Toluene						820	820		
Trichlorofluoromethane (Freon-11)					24	160	680		2,000
Vinyl Chloride									0.03
Xylene, total						130	260		
SVOCs									
2-Methylnaphthalene			230	370		230	370		
Acenaphthene			680	6,600		680	6,600		
Acenaphthylene			340	3,400		340	3,400		
Anthracene			17,000	170,000		17,000	170,000		
Benzo(a)anthracene			1	14		1	14		
Benzo(a)pyrene			0.1	1.4		0.1	1.4		
Benzo(b)fluoranthene			1	14		1	14		
Benzo(g,h,i)perylene			340	3,400		340	3,400		
Benzo(k)fluoranthene			10	140		10	140		
bis(2-Ethylhexyl)phthalate									3
Chrysene			100	1,400		100	1,400		
Dibenz(a,h)anthracene			0.1	1.4		0.1	1.4		
Dibenzofuran						16	170		
Fluoranthene			460	4,400		460	4,400		
Fluorene			460	4,400		460	4,400		
Indeno(1,2,3-cd)pyrene			1	14		1	14		
Naphthalene			24	120		24	120		
Phenanthrene			340	3,400		340	3,400		
Pyrene			340	3,400		340	3,400		

TABLE 24

Preliminary Remediation Goals - 2nd Street Disposal Area

Towers Road Disposal Areas Phase I RI Report

Harvey Point Defense Testing Activity

Hertford, North Carolina

Contaminants of Potential Concern	Background	Surface Soil			Subsurface Soil			Background	Groundwater
	Maximum Soil Concentration (mg/kg)	Protection of Groundwater Soil Remediation Goal (mg/kg)	Adjusted Residential Health-Based Soil Remediation Goal (mg/kg)	Adjusted Industrial Health-Based Soil Remediation Goal (mg/kg)	Protection of Groundwater Soil Remediation Goal (mg/kg)	Adjusted Residential Health-Based Soil Remediation Goal (mg/kg)	Adjusted Industrial Health-Based Soil Remediation Goal (mg/kg)	Maximum Groundwater Concentration (µg/L)	Regulatory Standard (µg/L)
PCBs									
Aroclor-1254			1	1		1	1		
Aroclor-1260			1	1		1	1		
Metals									
Antimony		0.9	7.8	103	0.9	7.8	103		1
Arsenic	3.74	5.8	4.7	18.5	5.8	4.7	18.5		10
Barium	134		3,000	38,000		3,000	38,000	34	
Cadmium	0.878		14	160		14	160		
Chromium	38.5		120,000	500,000		120,000	500,000	1.29	
Cobalt	4.6	**4.6**	23	300	**4.6**	23	300	6.8	**6.8**
Copper	441		1,550	20,500				3.44	
Iron	14,100		27,500	250,000		27,500	250,000	629	
Lead	47.9		400	800		400	800	0.271	
Manganese	412				**412**	1,800	23,000	367	**367**
Mercury	0.0366		23	310		23	310		
Nickel	16.8		750	10,000		750	10,000	6.48	
Silver			195	2,500		195	2,500		
Vanadium	31.9					78	1,000	1.24	
Zinc	87.3	1,200	4,600	62,000	1,200	4,600	62,000	7.65	1,000

Notes:

Gray cells - No applicable criterion; not a media COPC or Protection of Groundwater SRG does not apply

Bold - Value is maximum background concentration rather than regulatory standard because metal is naturally-present

TBD - To be determined; value to be provided by NCDENR

TABLE 25

Preliminary Remediation Goals - 5th Street Disposal Area

Towers Road Disposal Areas Phase I RI Report

Harvey Point Defense Testing Activity

Hertford, North Carolina

Contaminants of Potential Concern	Background	Surface Soil			Subsurface Soil			Background	Groundwater
	Maximum Soil Concentration (mg/kg)	Protection of Groundwater Soil Remediation Goal (mg/kg)	Adjusted Residential Health-Based Soil Remediation Goal (mg/kg)	Adjusted Industrial Health-Based Soil Remediation Goal (mg/kg)	Protection of Groundwater Soil Remediation Goal (mg/kg)	Adjusted Residential Health-Based Soil Remediation Goal (mg/kg)	Adjusted Industrial Health-Based Soil Remediation Goal (mg/kg)	Maximum Groundwater Concentration (µg/L)	Regulatory Standard (µg/L)
VOCs									
1,2,3-Trichlorobenzene						10	98		TBD
1,2,4-Trichlorobenzene					2.2	60	270		70
1,2-Dichlorobenzene									20
1,3-Dichlorobenzene					2.4				200
1,4-Dichlorobenzene					0.07	13.3	67		6
Benzene		0.01	8.5	42	0.01	8.5	42		1
Carbon disulfide						800	3,700		
Chlorobenzene					0.43	58	280		50
Cyclohexane						600	600		
Dichlorodifluoromethane (Freon-12)					29	24	100		1,000
Ethylbenzene						30	150		
Isopropylbenzene					1.3	270	270		70
m- and p-Xylene						150	488		
Methane									TBD
Methyl acetate						16,000	29,000		
Methylene chloride						70	620		
Methyl-tert-butyl ether (MTBE)									20
Styrene			870	870					
Toluene					5.5	820	820		
Trichlorofluoromethane (Freon-11)									2,000
Vinyl Chloride									0.03
SVOCs									
Acenaphthene			1,133	11,000		1,133	11,000		
Acenaphthylene			340	3,400		340	3,400		
Anthracene		660	17,000	170,000	660	17,000	170,000		2,000
Benzo(a)anthracene			1.2	16.2		1.2	16.2		
Benzo(a)pyrene			0	2		0	2		
Benzo(b)fluoranthene			1.2	16		1.2	16		
Benzo(g,h,i)perylene			340	3,400		340	3,400		
Benzo(k)fluoranthene			11.5	161.5		11.5	161.5		
bis(2-Ethylhexyl)phthalate									3
Carbazole			187	1,100					
Chrysene			115	1,615		115	1,615		
Dibenz(a,h)anthracene			0.12	1.6		0.12	1.6		
Dibenzofuran			80	850					
Fluoranthene			460	4,400		460	4,400		
Fluorene		56	460	4,400	56	460	4,400		300
Indeno(1,2,3-cd)pyrene			1.15	16.2		1.15	16.2		
Naphthalene									6
Phenanthrene			340	3,400		340	3,400		
Pyrene			340	3,400		340	3,400		

TABLE 25

Preliminary Remediation Goals - 5th Street Disposal Area

Towers Road Disposal Areas Phase I RI Report

Harvey Point Defense Testing Activity

Hertford, North Carolina

Contaminants of Potential Concern	Background	Surface Soil			Subsurface Soil			Background	Groundwater
	Maximum Soil Concentration (mg/kg)	Protection of Groundwater Soil Remediation Goal (mg/kg)	Adjusted Residential Health-Based Soil Remediation Goal (mg/kg)	Adjusted Industrial Health-Based Soil Remediation Goal (mg/kg)	Protection of Groundwater Soil Remediation Goal (mg/kg)	Adjusted Residential Health-Based Soil Remediation Goal (mg/kg)	Adjusted Industrial Health-Based Soil Remediation Goal (mg/kg)	Maximum Groundwater Concentration (µg/L)	Regulatory Standard (µg/L)
VOCs									
Pesticide									
4,4'-DDD					NA	11	40		
PCBs									
Aroclor-1254			1	1		1	1		
Aroclor-1260			1	1		1	1		
Metals									
Antimony			6.20	82		6.20	82		
Arsenic	3.74	5.8	4.7	18	5.8	4.7	18		10
Barium	134				580	3,000	38,000	34	700
Beryllium	0.636							0.0976	4
Cadmium	0.878		14	160		14	160		
Chromium	38.5				360,000	120,000	500,000	1.29	10
Cobalt	4.6				**4.6**	12	150	6.8	**6.8**
Copper	441							3.44	1,000
Iron	14,100	150	55,000	500,000	150	55,000	500,000	629	**629**
Lead	47.9	270	400	800	270	400	800	0.271	15
Manganese	412							367	**367**
Mercury	0.0366		23	310		23	310		
Nickel	16.8				130	375	5,000	6.48	100
Silver						195	2,500		
Vanadium	31.9							1.2	**1.2**
Zinc	87.3	1,200	4,600	62,000	1,200	4,600	62,000	7.65	1,000

Notes:

Gray cells - No applicable criterion; not a media COPC or Protection of Groundwater SRG does not apply

Bold - Value is maximum background concentration rather than regulatory standard because metal is naturally-present

TBD - To be determined; value to be provided by NCDENR

Figures

12-112-002

Legend

HPDTA Boundary

Investigation Area

N
W E
S

0 6000 12000 Feet

Figure 1
HPDTA Location
Towers Road Phase I Remedial Investigation
Harvey Point Defense Testing Activity
Hertford, North Carolina

CUES MappingServices

12-112-003

Legend

Investigation Area

N
W E
S

0 250 500 Feet

Figure 2
Site Location Map
Towers Road Phase I Remedial Investigation
Harvey Point Defense Testing Activity
Hertford, North Carolina

CUES
MappingServices

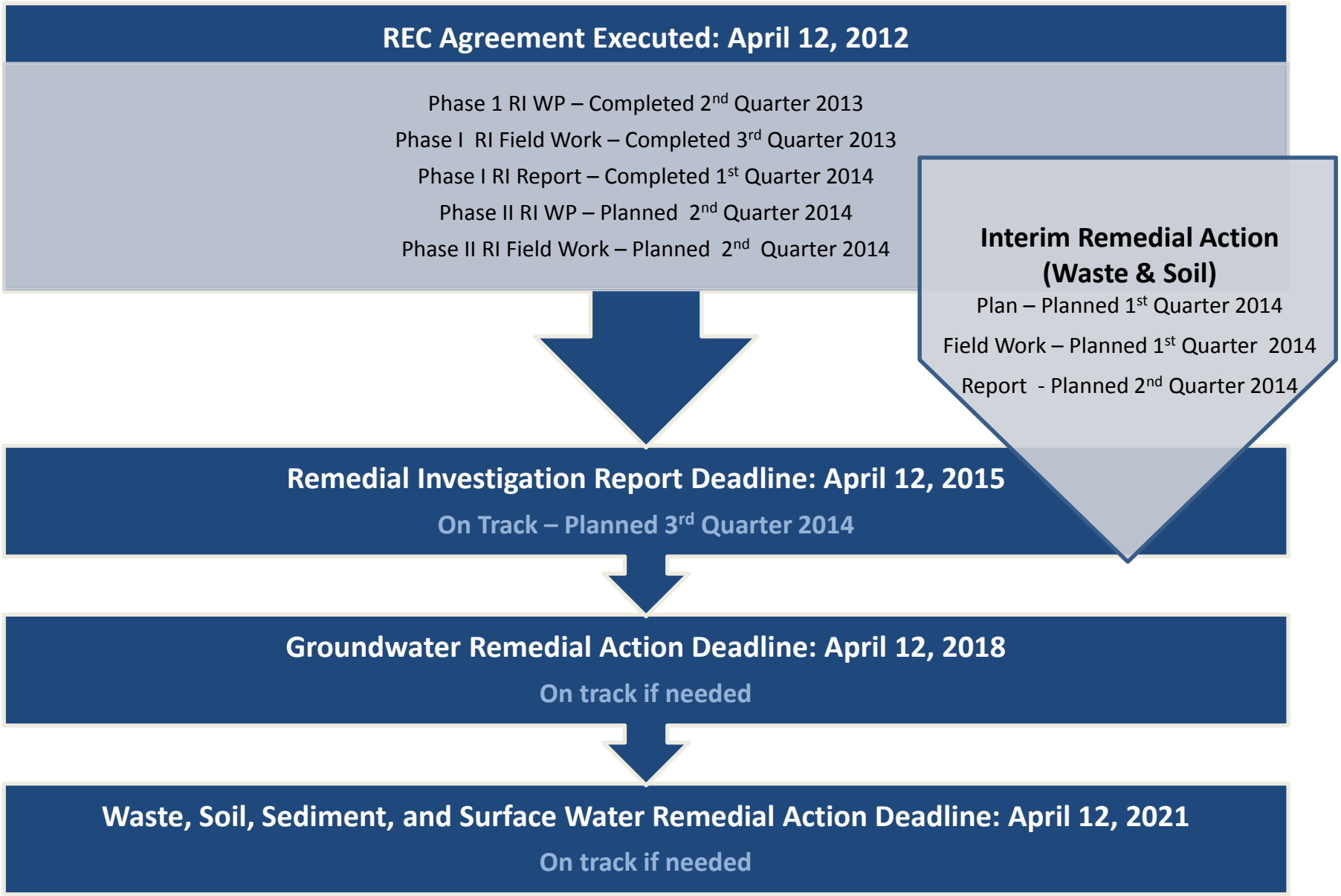

Note: Quarterly reports must be submitted on or before the 15th day of January, April, July, and October of each year.

Figure 3
REC Program Milestones Timeline
Towers Road Phase I Remedial Investigation
Harvey Point Defense Testing Activity
Hertford, North Carolina

survey

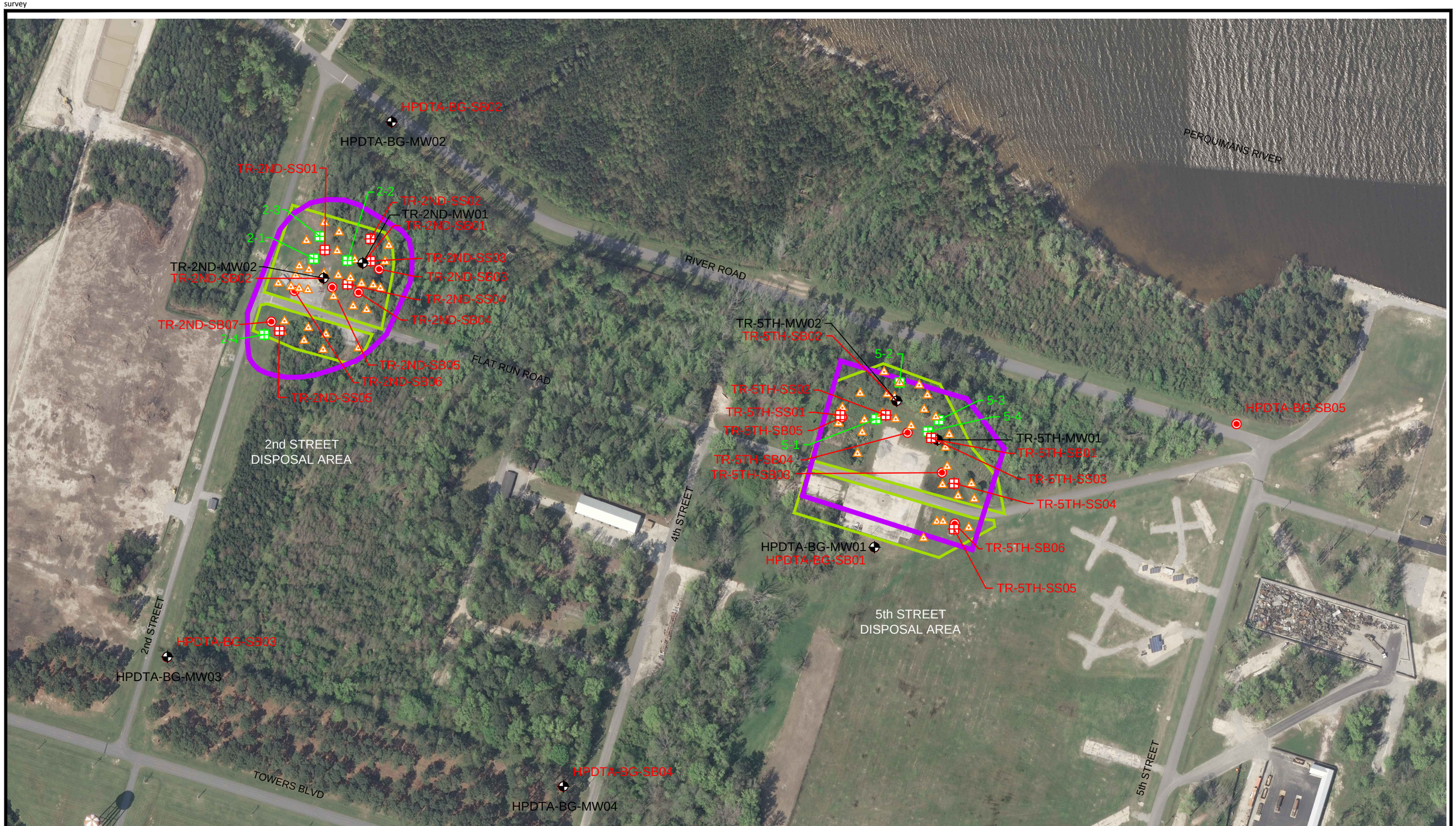

Legend

- Investigation Area
- Previous Sample Location (2012)
- Surface Soil Sample Location
- Subsurface Soil Sample Location
- Monitoring Well Location
- Test Pit locations
- Extent Of The 2013 Geophysical Survey

N
W E
S

0 100 200 Feet

Figure 4
Sample, Test Pit, and Geophysical Survey Locations
Towers Road Phase I Remedial Investigation
Harvey Point Defense Testing Activity
Hertford, North Carolina

CUES MappingServices

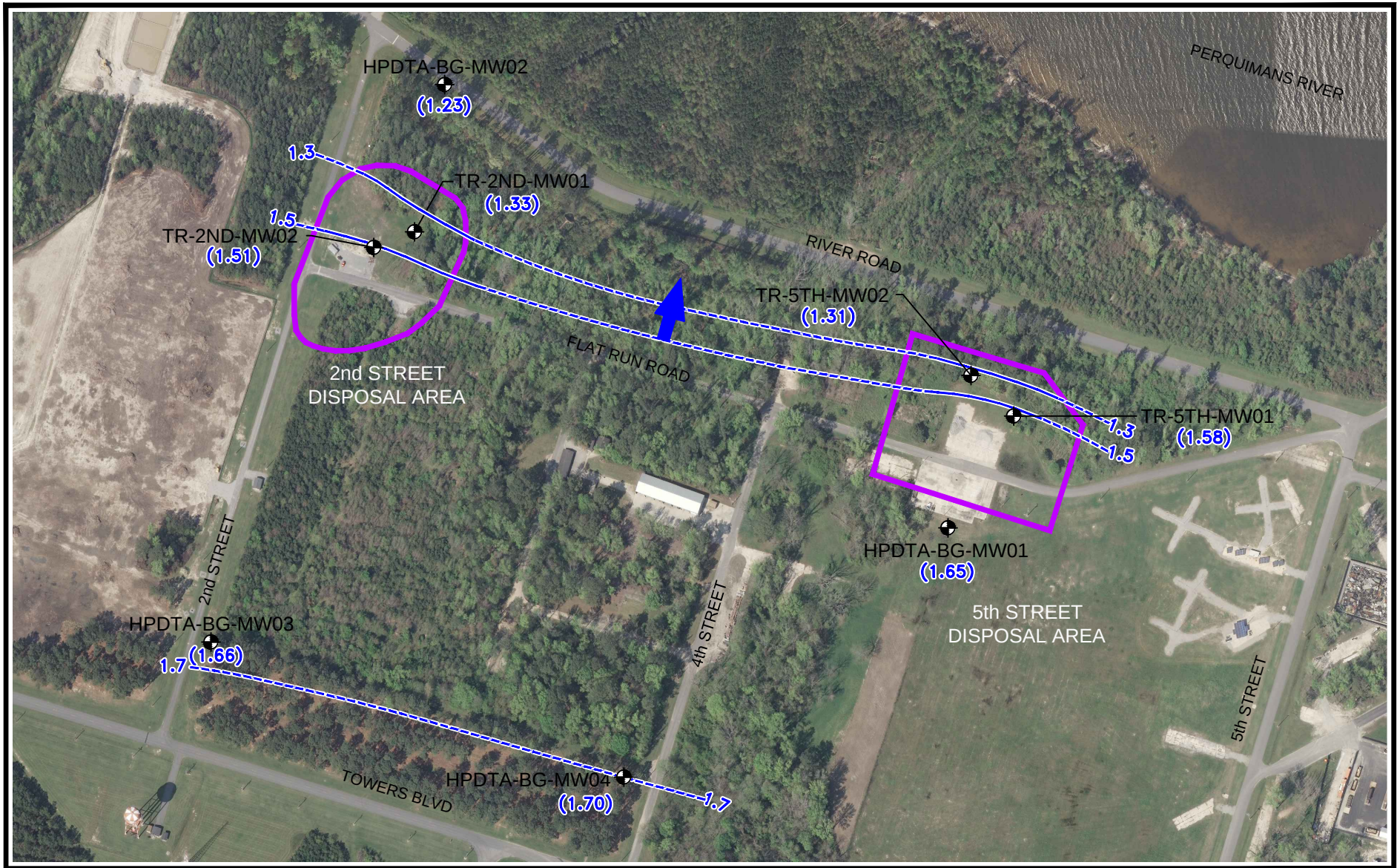

Legend

- Investigation Area
- Monitoring Well Locations
- Groundwater Flow Direction
- Groundwater Contour (Dashed where Inferred)
- (1.58) Groundwater Elevation (ft amsl)
- ft amsl Feet Above Mean Sea Level

N
W E
S

0 150 300 Feet

Figure 5
Groundwater Contour Map
Towers Road Phase I Remedial Investigation
Harvey Point Defense Testing Activity
Hertford, North Carolina

CUES MappingServices

12-112-003

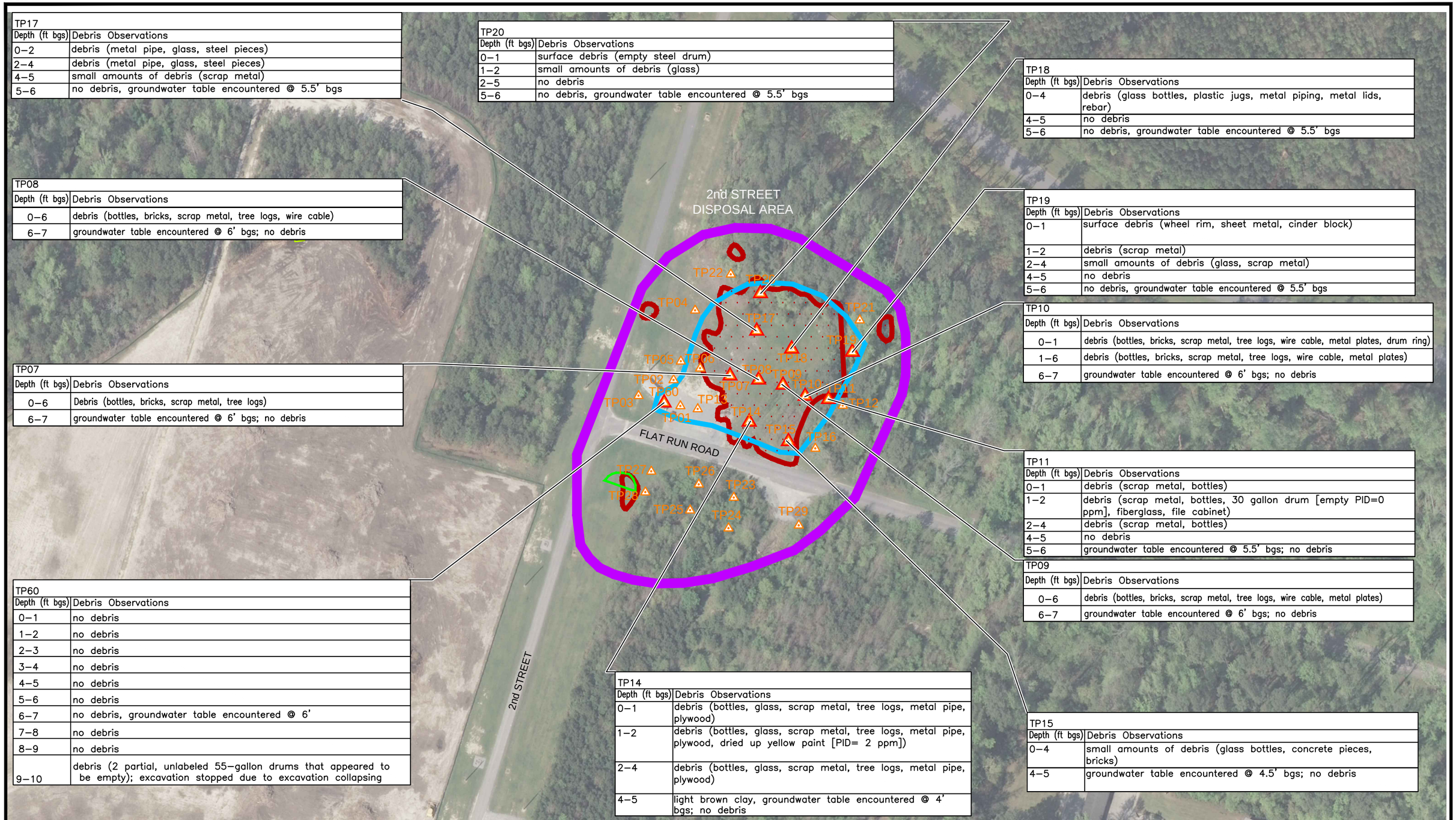

TP17	
Depth (ft bgs)	Debris Observations
0–2	debris (metal pipe, glass, steel pieces)
2–4	debris (metal pipe, glass, steel pieces)
4–5	small amounts of debris (scrap metal)
5–6	no debris, groundwater table encountered @ 5.5' bgs

TP20	
Depth (ft bgs)	Debris Observations
0–1	surface debris (empty steel drum)
1–2	small amounts of debris (glass)
2–5	no debris
5–6	no debris, groundwater table encountered @ 5.5' bgs

TP18	
Depth (ft bgs)	Debris Observations
0–4	debris (glass bottles, plastic jugs, metal piping, metal lids, rebar)
4–5	no debris
5–6	no debris, groundwater table encountered @ 5.5' bgs

TP08	
Depth (ft bgs)	Debris Observations
0–6	debris (bottles, bricks, scrap metal, tree logs, wire cable)
6–7	groundwater table encountered @ 6' bgs; no debris

TP19	
Depth (ft bgs)	Debris Observations
0–1	surface debris (wheel rim, sheet metal, cinder block)
1–2	debris (scrap metal)
2–4	small amounts of debris (glass, scrap metal)
4–5	no debris
5–6	no debris, groundwater table encountered @ 5.5' bgs

TP10	
Depth (ft bgs)	Debris Observations
0–1	debris (bottles, bricks, scrap metal, tree logs, wire cable, metal plates, drum ring)
1–6	debris (bottles, bricks, scrap metal, tree logs, wire cable, metal plates)
6–7	groundwater table encountered @ 6' bgs; no debris

TP07	
Depth (ft bgs)	Debris Observations
0–6	Debris (bottles, bricks, scrap metal, tree logs)
6–7	groundwater table encountered @ 6' bgs; no debris

TP11	
Depth (ft bgs)	Debris Observations
0–1	debris (scrap metal, bottles)
1–2	debris (scrap metal, bottles, 30 gallon drum [empty PID=0 ppm], fiberglass, file cabinet)
2–4	debris (scrap metal, bottles)
4–5	no debris
5–6	groundwater table encountered @ 5.5' bgs; no debris

TP09	
Depth (ft bgs)	Debris Observations
0–6	debris (bottles, bricks, scrap metal, tree logs, wire cable, metal plates)
6–7	groundwater table encountered @ 6' bgs; no debris

TP60	
Depth (ft bgs)	Debris Observations
0–1	no debris
1–2	no debris
2–3	no debris
3–4	no debris
4–5	no debris
5–6	no debris
6–7	no debris, groundwater table encountered @ 6'
7–8	no debris
8–9	no debris
9–10	debris (2 partial, unlabeled 55–gallon drums that appeared to be empty); excavation stopped due to excavation collapsing

TP14	
Depth (ft bgs)	Debris Observations
0–1	debris (bottles, glass, scrap metal, tree logs, metal pipe, plywood)
1–2	debris (bottles, glass, scrap metal, tree logs, metal pipe, plywood, dried up yellow paint [PID= 2 ppm])
2–4	debris (bottles, glass, scrap metal, tree logs, metal pipe, plywood)
4–5	light brown clay, groundwater table encountered @ 4' bgs; no debris

TP15	
Depth (ft bgs)	Debris Observations
0–4	small amounts of debris (glass bottles, concrete pieces, bricks)
4–5	groundwater table encountered @ 4.5' bgs; no debris

Legend

- Investigation Area
- Test Pit location with no debris
- Test Pit location with debris
- Potential Waste / Debris Area (2013)
- Anomalous Area (2013)
- Elevated Electromagnetic Induction Response Area (2011)

Notes:
Callouts shown for test pits with debris.
Test pit locations without a callout box did not contain any debris. Test pits excavations consisted of approximately 5 ft by 5 ft squares for each test pit.
ft- feet
bgs - below ground surface

N
W E
S

0 50 100 Feet

Figure 6
2nd Street Disposal Area Test Pit Results
Towers Road Phase I Remedial Investigation
Harvey Point Defense Testing Activity
Hertford, North Carolina

CUES MappingServices

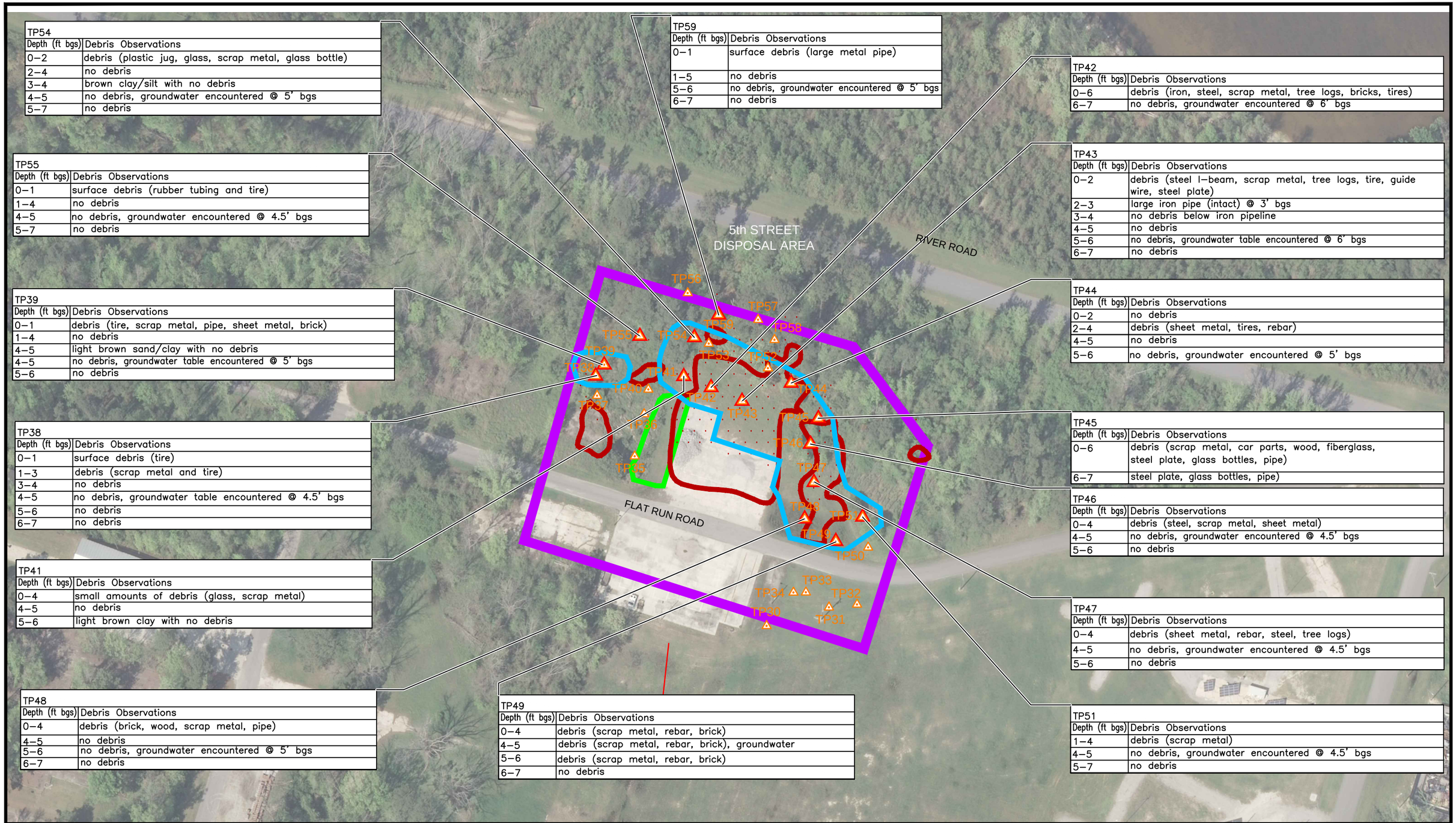

TP54

Depth (ft bgs)	Debris Observations
0–2	debris (plastic jug, glass, scrap metal, glass bottle)
2–4	no debris
3–4	brown clay/silt with no debris
4–5	no debris, groundwater encountered @ 5' bgs
5–7	no debris

TP59

Depth (ft bgs)	Debris Observations
0–1	surface debris (large metal pipe)
1–5	no debris
5–6	no debris, groundwater encountered @ 5' bgs
6–7	no debris

TP42

Depth (ft bgs)	Debris Observations
0–6	debris (iron, steel, scrap metal, tree logs, bricks, tires)
6–7	no debris, groundwater encountered @ 6' bgs

TP55

Depth (ft bgs)	Debris Observations
0–1	surface debris (rubber tubing and tire)
1–4	no debris
4–5	no debris, groundwater encountered @ 4.5' bgs
5–7	no debris

TP43

Depth (ft bgs)	Debris Observations
0–2	debris (steel I–beam, scrap metal, tree logs, tire, guide wire, steel plate)
2–3	large iron pipe (intact) @ 3' bgs
3–4	no debris below iron pipeline
4–5	no debris
5–6	no debris, groundwater table encountered @ 6' bgs
6–7	no debris

TP39

Depth (ft bgs)	Debris Observations
0–1	debris (tire, scrap metal, pipe, sheet metal, brick)
1–4	no debris
4–5	light brown sand/clay with no debris
4–5	no debris, groundwater table encountered @ 5' bgs
5–6	no debris

TP44

Depth (ft bgs)	Debris Observations
0–2	no debris
2–4	debris (sheet metal, tires, rebar)
4–5	no debris
5–6	no debris, groundwater encountered @ 5' bgs

TP38

Depth (ft bgs)	Debris Observations
0–1	surface debris (tire)
1–3	debris (scrap metal and tire)
3–4	no debris
4–5	no debris, groundwater table encountered @ 4.5' bgs
5–6	no debris
6–7	no debris

TP45

Depth (ft bgs)	Debris Observations
0–6	debris (scrap metal, car parts, wood, fiberglass, steel plate, glass bottles, pipe)
6–7	steel plate, glass bottles, pipe)

TP46

Depth (ft bgs)	Debris Observations
0–4	debris (steel, scrap metal, sheet metal)
4–5	no debris, groundwater encountered @ 4.5' bgs
5–6	no debris

TP41

Depth (ft bgs)	Debris Observations
0–4	small amounts of debris (glass, scrap metal)
4–5	no debris
5–6	light brown clay with no debris

TP47

Depth (ft bgs)	Debris Observations
0–4	debris (sheet metal, rebar, steel, tree logs)
4–5	no debris, groundwater encountered @ 4.5' bgs
5–6	no debris

TP48

Depth (ft bgs)	Debris Observations
0–4	debris (brick, wood, scrap metal, pipe)
4–5	no debris
5–6	no debris, groundwater encountered @ 5' bgs
6–7	no debris

TP49

Depth (ft bgs)	Debris Observations
0–4	debris (scrap metal, rebar, brick)
4–5	debris (scrap metal, rebar, brick), groundwater
5–6	debris (scrap metal, rebar, brick)
6–7	no debris

TP51

Depth (ft bgs)	Debris Observations
1–4	debris (scrap metal)
4–5	no debris, groundwater encountered @ 4.5' bgs
5–7	no debris

Legend

- Investigation Area
- Test Pit location with no debris
- Test Pit location with debris
- Potential Waste / Debris Area (2013)
- Anomalous Area (2013)
- Elevated Electromagnetic Induction Response Area (2011)

Notes:
Callouts shown for test pits with debris.
Test pit locations without a callout box did not contain any debris. Test pits excavations consisted of approximately 5 ft by 5 ft squares for each test pit.
ft- feet
bgs - below ground surface

N
W E
S

0 50 100
Feet

Figure 7
5th Street Disposal Area Test Pit Results
Towers Road Phase I Remedial Investigation
Harvey Point Defense Testing Activity
Hertford, North Carolina

CUES MappingServices

survey

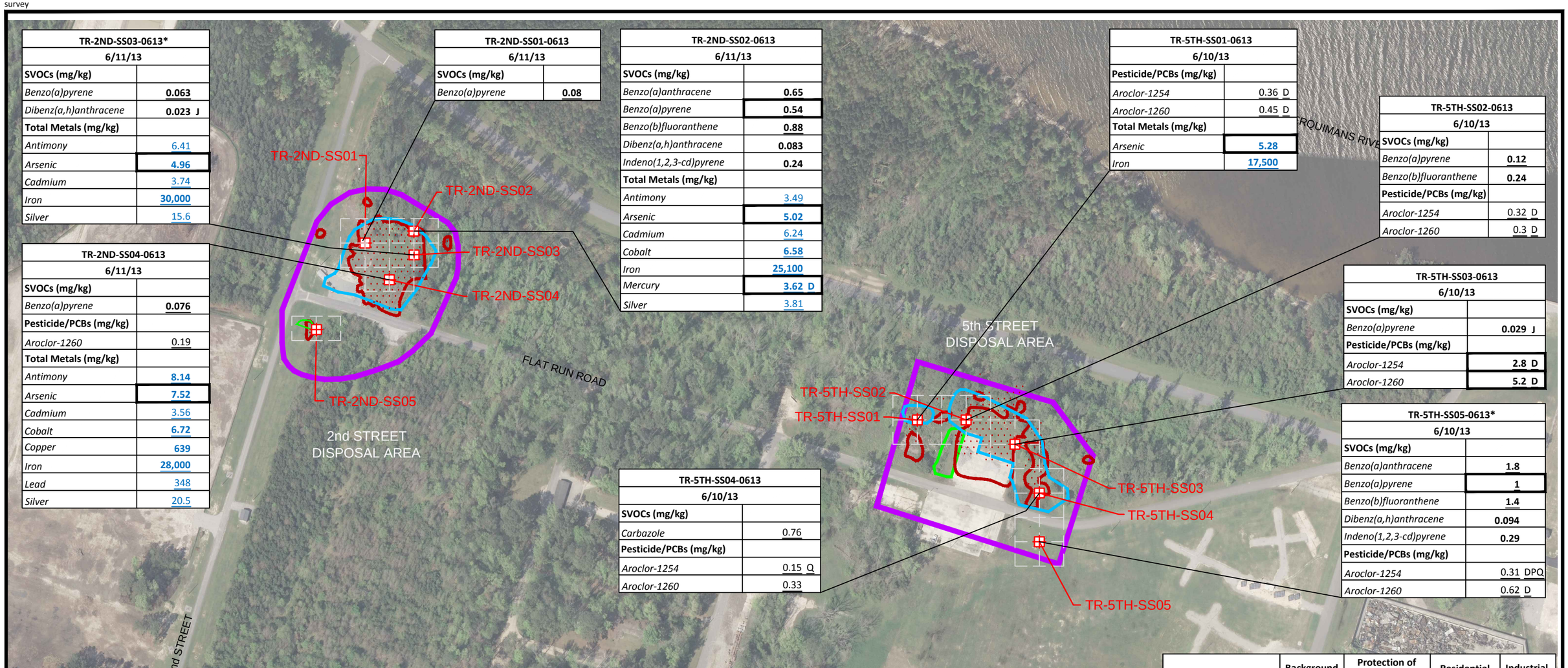

TR-2ND-SS03-0613*	
6/11/13	
SVOCs (mg/kg)	
Benzo(a)pyrene	**0.063**
Dibenz(a,h)anthracene	**0.023 J**
Total Metals (mg/kg)	
Antimony	6.41
Arsenic	**4.96**
Cadmium	3.74
Iron	**30,000**
Silver	15.6

TR-2ND-SS01-0613	
6/11/13	
SVOCs (mg/kg)	
Benzo(a)pyrene	**0.08**

TR-2ND-SS02-0613	
6/11/13	
SVOCs (mg/kg)	
Benzo(a)anthracene	**0.65**
Benzo(a)pyrene	**0.54**
Benzo(b)fluoranthene	**0.88**
Dibenz(a,h)anthracene	**0.083**
Indeno(1,2,3-cd)pyrene	**0.24**
Total Metals (mg/kg)	
Antimony	3.49
Arsenic	**5.02**
Cadmium	6.24
Cobalt	**6.58**
Iron	**25,100**
Mercury	**3.62 D**
Silver	3.81

TR-5TH-SS01-0613	
6/10/13	
Pesticide/PCBs (mg/kg)	
Aroclor-1254	0.36 D
Aroclor-1260	0.45 D
Total Metals (mg/kg)	
Arsenic	**5.28**
Iron	**17,500**

TR-5TH-SS02-0613	
6/10/13	
SVOCs (mg/kg)	
Benzo(a)pyrene	**0.12**
Benzo(b)fluoranthene	**0.24**
Pesticide/PCBs (mg/kg)	
Aroclor-1254	0.32 D
Aroclor-1260	0.3 D

TR-2ND-SS04-0613	
6/11/13	
SVOCs (mg/kg)	
Benzo(a)pyrene	**0.076**
Pesticide/PCBs (mg/kg)	
Aroclor-1260	0.19
Total Metals (mg/kg)	
Antimony	**8.14**
Arsenic	**7.52**
Cadmium	3.56
Cobalt	**6.72**
Copper	**639**
Iron	**28,000**
Lead	348
Silver	20.5

TR-5TH-SS03-0613	
6/10/13	
SVOCs (mg/kg)	
Benzo(a)pyrene	**0.029 J**
Pesticide/PCBs (mg/kg)	
Aroclor-1254	**2.8 D**
Aroclor-1260	**5.2 D**

TR-5TH-SS05-0613*	
6/10/13	
SVOCs (mg/kg)	
Benzo(a)anthracene	**1.8**
Benzo(a)pyrene	**1**
Benzo(b)fluoranthene	**1.4**
Dibenz(a,h)anthracene	**0.094**
Indeno(1,2,3-cd)pyrene	**0.29**
Pesticide/PCBs (mg/kg)	
Aroclor-1254	0.31 DPQ
Aroclor-1260	0.62 D

TR-5TH-SS04-0613	
6/10/13	
SVOCs (mg/kg)	
Carbazole	0.76
Pesticide/PCBs (mg/kg)	
Aroclor-1254	0.15 Q
Aroclor-1260	0.33

Notes:
[1] Values are from the maximum values for the background samples collected during the June 2013 sampling event.
[2] Values are from the Inactive Hazardous Sites Branch Preliminary Soil Remediation Goals (PSRG) Table (NC DENR, July 2013). For carcinogenic PAHs without PSRG, the PSRG for benzo(a)pyrene was used. For non-carcinogenic PAHs without PSRG, the PSRG for pyrene was used. For PCBs, the unrestricted use residential/industrial PSRG of 1 mg/kg was used.
Underlined text indicates exceedance of the Protection of Groundwater PSRG criteria.
Bold text indicates exceedance of Preliminary Residential Health-Based Soil Remediation Goals.
Bold box indicates exceedance of Preliminary Industrial Health-Based Soil Remediation Goals.
Blue text indicates exceedance of maximum background value.
D - Compound identified in an analysis at a secondary dilution factor
J - Analyte present below the reporting limit
mg/kg - Milligrams per kilogram
NA - Not available/not applicable
P - Indicates a greater than 25% difference of detection between the primary and secondary column.
Q - One or more quality control criteria failed
*The highest concentration of the parent sample and duplicate sample.
For total metals figure only shows values that exceed both the maximum background level and at least one of the screening criteria.

	Background Value[1]	Protection of Groundwater PSRG[2]	Residential PSRG[2]	Industrial PSRG[2]
SVOCs (mg/kg)				
Benzo(a)anthracene	NA	0.18	0.15	2.1
Benzo(a)pyrene	NA	0.0590	0.0150	0.21
Benzo(b)fluoranthene	NA	0.6	0.15	2.1
Carbazole	NA	0.37	NA	NA
Dibenz(a,h)anthracene	NA	0.19	0.0150	0.21
Indeno(1,2,3-cd)pyrene	NA	2	0.15	2.1
Pesticide/PCBs (mg/kg)				
Aroclor-1254	NA	0.14	1	1
Aroclor-1260	NA	0.14	1	1

	Background Value[1]	Protection of Groundwater PSRG[2]	Residential PSRG[2]	Industrial PSRG[2]
Total Metals (mg/kg)				
Antimony	NA	0.9	6.2	82
Arsenic	3.74	5.8	0.61	2.4
Cadmium	0.8780	3	14	160
Cobalt	4.64	0.9	4.6	60
Copper	441	700	620	8200
Iron	14,100	150	11,000	100,000
Lead	47.9	270	400	800
Mercury	0.0366	1	2	3.1
Silver	NA	3.4	78	1,000
Vanadium	31.9	6	78	1,000

Legend
- Investigation Area
- Surface Soil Sample Location
- Surface Soil Composite Sample Location Grid
- Potential Waste / Debris Area (2013)
- Anomalous Area (2013)
- Elevated Electromagnetic Induction Response Area (2011)

N W E S

0 100 200 Feet

Figure 8
Surface Soil Analytical Results - Exceedances Only
Towers Road Phase I Remedial Investigation
Harvey Point Defense Testing Activity
Hertford, North Carolina

CUES MappingServices

survey

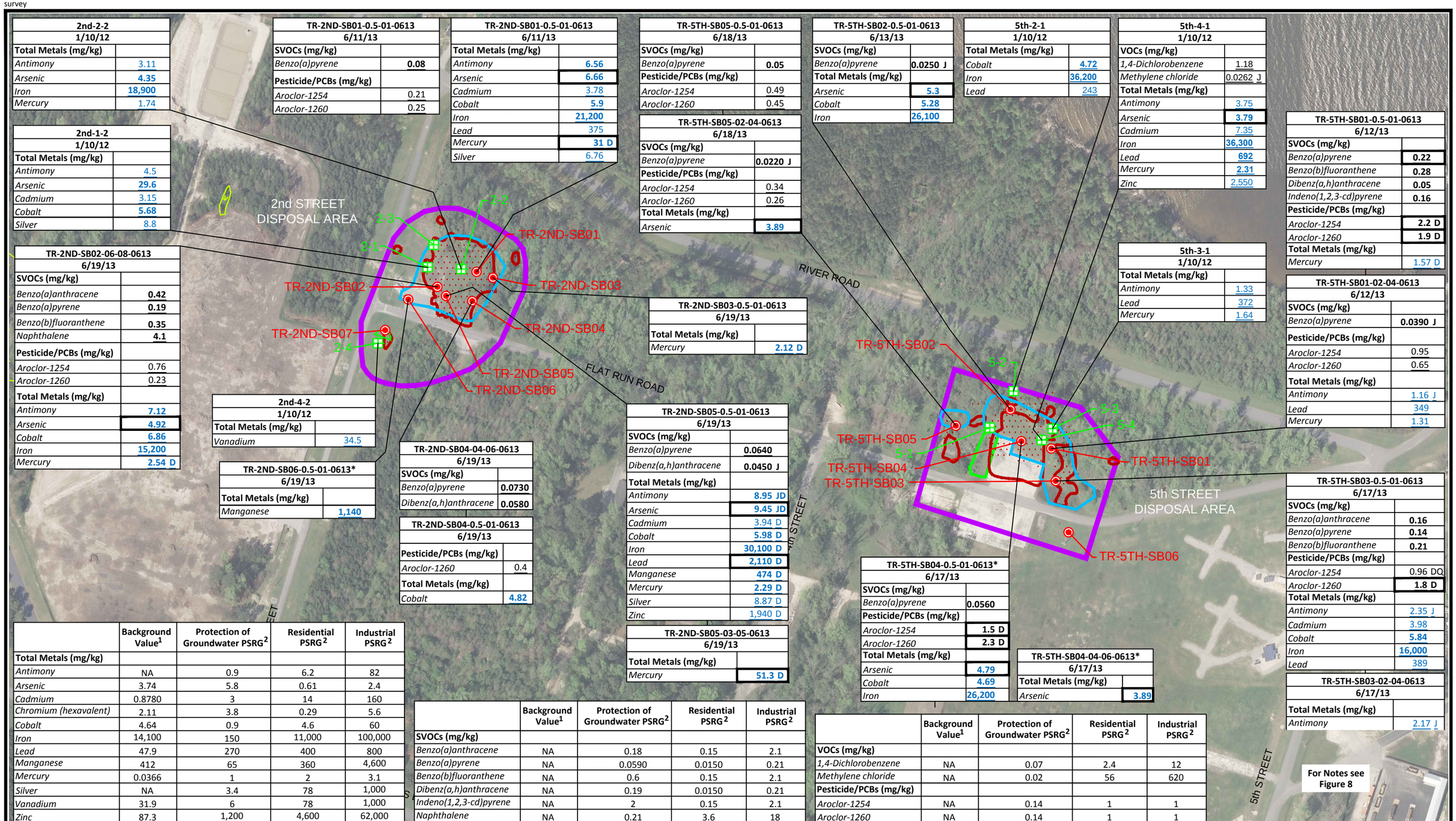

2nd-2-2	
1/10/12	
Total Metals (mg/kg)	
Antimony	3.11
Arsenic	4.35
Iron	18,900
Mercury	1.74

2nd-1-2	
1/10/12	
Total Metals (mg/kg)	
Antimony	4.5
Arsenic	29.6
Cadmium	3.15
Cobalt	5.68
Silver	8.8

TR-2ND-SB02-06-08-0613	
6/19/13	
SVOCs (mg/kg)	
Benzo(a)anthracene	0.42
Benzo(a)pyrene	0.19
Benzo(b)fluoranthene	0.35
Naphthalene	4.1
Pesticide/PCBs (mg/kg)	
Aroclor-1254	0.76
Aroclor-1260	0.23
Total Metals (mg/kg)	
Antimony	7.12
Arsenic	4.92
Cobalt	6.86
Iron	15,200
Mercury	2.54 D

TR-2ND-SB01-0.5-01-0613	
6/11/13	
SVOCs (mg/kg)	
Benzo(a)pyrene	0.08
Pesticide/PCBs (mg/kg)	
Aroclor-1254	0.21
Aroclor-1260	0.25

TR-2ND-SB01-0.5-01-0613	
6/11/13	
Total Metals (mg/kg)	
Antimony	6.56
Arsenic	6.66
Cadmium	3.78
Cobalt	5.9
Iron	21,200
Lead	375
Mercury	31 D
Silver	6.76

TR-5TH-SB05-0.5-01-0613	
6/18/13	
SVOCs (mg/kg)	
Benzo(a)pyrene	0.05
Pesticide/PCBs (mg/kg)	
Aroclor-1254	0.49
Aroclor-1260	0.45

TR-5TH-SB05-02-04-0613	
6/18/13	
SVOCs (mg/kg)	
Benzo(a)pyrene	0.0220 J
Pesticide/PCBs (mg/kg)	
Aroclor-1254	0.34
Aroclor-1260	0.26
Total Metals (mg/kg)	
Arsenic	3.89

TR-5TH-SB02-0.5-01-0613	
6/13/13	
SVOCs (mg/kg)	
Benzo(a)pyrene	0.0250 J
Total Metals (mg/kg)	
Arsenic	5.3
Cobalt	5.28
Iron	26,100

5th-2-1	
1/10/12	
Total Metals (mg/kg)	
Cobalt	4.72
Iron	36,200
Lead	243

5th-4-1	
1/10/12	
VOCs (mg/kg)	
1,4-Dichlorobenzene	1.18
Methylene chloride	0.0262 J
Total Metals (mg/kg)	
Antimony	3.75
Arsenic	3.79
Cadmium	7.35
Iron	36,300
Lead	692
Mercury	2.31
Zinc	2,550

5th-3-1	
1/10/12	
Total Metals (mg/kg)	
Antimony	1.33
Lead	372
Mercury	1.64

TR-5TH-SB01-0.5-01-0613	
6/12/13	
SVOCs (mg/kg)	
Benzo(a)pyrene	0.22
Benzo(b)fluoranthene	0.28
Dibenz(a,h)anthracene	0.05
Indeno(1,2,3-cd)pyrene	0.16
Pesticide/PCBs (mg/kg)	
Aroclor-1254	2.2 D
Aroclor-1260	1.9 D
Total Metals (mg/kg)	
Mercury	1.57 D

TR-5TH-SB01-02-04-0613	
6/12/13	
SVOCs (mg/kg)	
Benzo(a)pyrene	0.0390 J
Pesticide/PCBs (mg/kg)	
Aroclor-1254	0.95
Aroclor-1260	0.65
Total Metals (mg/kg)	
Antimony	1.16 J
Lead	349
Mercury	1.31

TR-2ND-SB03-0.5-01-0613	
6/19/13	
Total Metals (mg/kg)	
Mercury	2.12 D

2nd-4-2	
1/10/12	
Total Metals (mg/kg)	
Vanadium	34.5

TR-2ND-SB06-0.5-01-0613*	
6/19/13	
Total Metals (mg/kg)	
Manganese	1,140

TR-2ND-SB04-04-06-0613	
6/19/13	
SVOCs (mg/kg)	
Benzo(a)pyrene	0.0730
Dibenz(a,h)anthracene	0.0580

TR-2ND-SB04-0.5-01-0613	
6/19/13	
Pesticide/PCBs (mg/kg)	
Aroclor-1260	0.4
Total Metals (mg/kg)	
Cobalt	4.82

TR-2ND-SB05-0.5-01-0613	
6/19/13	
SVOCs (mg/kg)	
Benzo(a)pyrene	0.0640
Dibenz(a,h)anthracene	0.0450 J
Total Metals (mg/kg)	
Antimony	8.95 JD
Arsenic	9.45 JD
Cadmium	3.94 D
Cobalt	5.98 D
Iron	30,100 D
Lead	2,110 D
Manganese	474 D
Mercury	2.29 D
Silver	8.87 D
Zinc	1,940 D

TR-2ND-SB05-03-05-0613	
6/19/13	
Total Metals (mg/kg)	
Mercury	51.3 D

TR-5TH-SB04-0.5-01-0613*	
6/17/13	
SVOCs (mg/kg)	
Benzo(a)pyrene	0.0560
Pesticide/PCBs (mg/kg)	
Aroclor-1254	1.5 D
Aroclor-1260	2.3 D
Total Metals (mg/kg)	
Arsenic	4.79
Cobalt	4.69
Iron	26,200

TR-5TH-SB04-04-06-0613*	
6/17/13	
Total Metals (mg/kg)	
Arsenic	3.89

TR-5TH-SB03-0.5-01-0613	
6/17/13	
SVOCs (mg/kg)	
Benzo(a)anthracene	0.16
Benzo(a)pyrene	0.14
Benzo(b)fluoranthene	0.21
Pesticide/PCBs (mg/kg)	
Aroclor-1254	0.96 DQ
Aroclor-1260	1.8 D
Total Metals (mg/kg)	
Antimony	2.35 J
Cadmium	3.98
Cobalt	5.84
Iron	16,000
Lead	389

TR-5TH-SB03-02-04-0613	
6/17/13	
Total Metals (mg/kg)	
Antimony	2.17 J

	Background Value[1]	Protection of Groundwater PSRG[2]	Residential PSRG[2]	Industrial PSRG[2]
Total Metals (mg/kg)				
Antimony	NA	0.9	6.2	82
Arsenic	3.74	5.8	0.61	2.4
Cadmium	0.8780	3	14	160
Chromium (hexavalent)	2.11	3.8	0.29	5.6
Cobalt	4.64	0.9	4.6	60
Iron	14,100	150	11,000	100,000
Lead	47.9	270	400	800
Manganese	412	65	360	4,600
Mercury	0.0366	1	2	3.1
Silver	NA	3.4	78	1,000
Vanadium	31.9	6	78	1,000
Zinc	87.3	1,200	4,600	62,000

	Background Value[1]	Protection of Groundwater PSRG[2]	Residential PSRG[2]	Industrial PSRG[2]
SVOCs (mg/kg)				
Benzo(a)anthracene	NA	0.18	0.15	2.1
Benzo(a)pyrene	NA	0.0590	0.0150	0.21
Benzo(b)fluoranthene	NA	0.6	0.15	2.1
Dibenz(a,h)anthracene	NA	0.19	0.0150	0.21
Indeno(1,2,3-cd)pyrene	NA	2	0.15	2.1
Naphthalene	NA	0.21	3.6	18

	Background Value[1]	Protection of Groundwater PSRG[2]	Residential PSRG[2]	Industrial PSRG[2]
VOCs (mg/kg)				
1,4-Dichlorobenzene	NA	0.07	2.4	12
Methylene chloride	NA	0.02	56	620
Pesticide/PCBs (mg/kg)				
Aroclor-1254	NA	0.14	1	1
Aroclor-1260	NA	0.14	1	1

Legend

- Investigation Area
- Previous Sample Location (2012)
- Subsurface Soil Sample Location
- Potential Waste / Debris Area (2013)
- Anomalous Area (2013)
- Elevated Electromagnetic Induction Response Area (2011)

N W E S

0 100 200 Feet

Figure 9
Subsurface Soil Analytical Results - Exceedances Only
Towers Road Phase I Remedial Investigation
Harvey Point Defense Testing Activity
Hertford, North Carolina

CUES MappingServices

survey

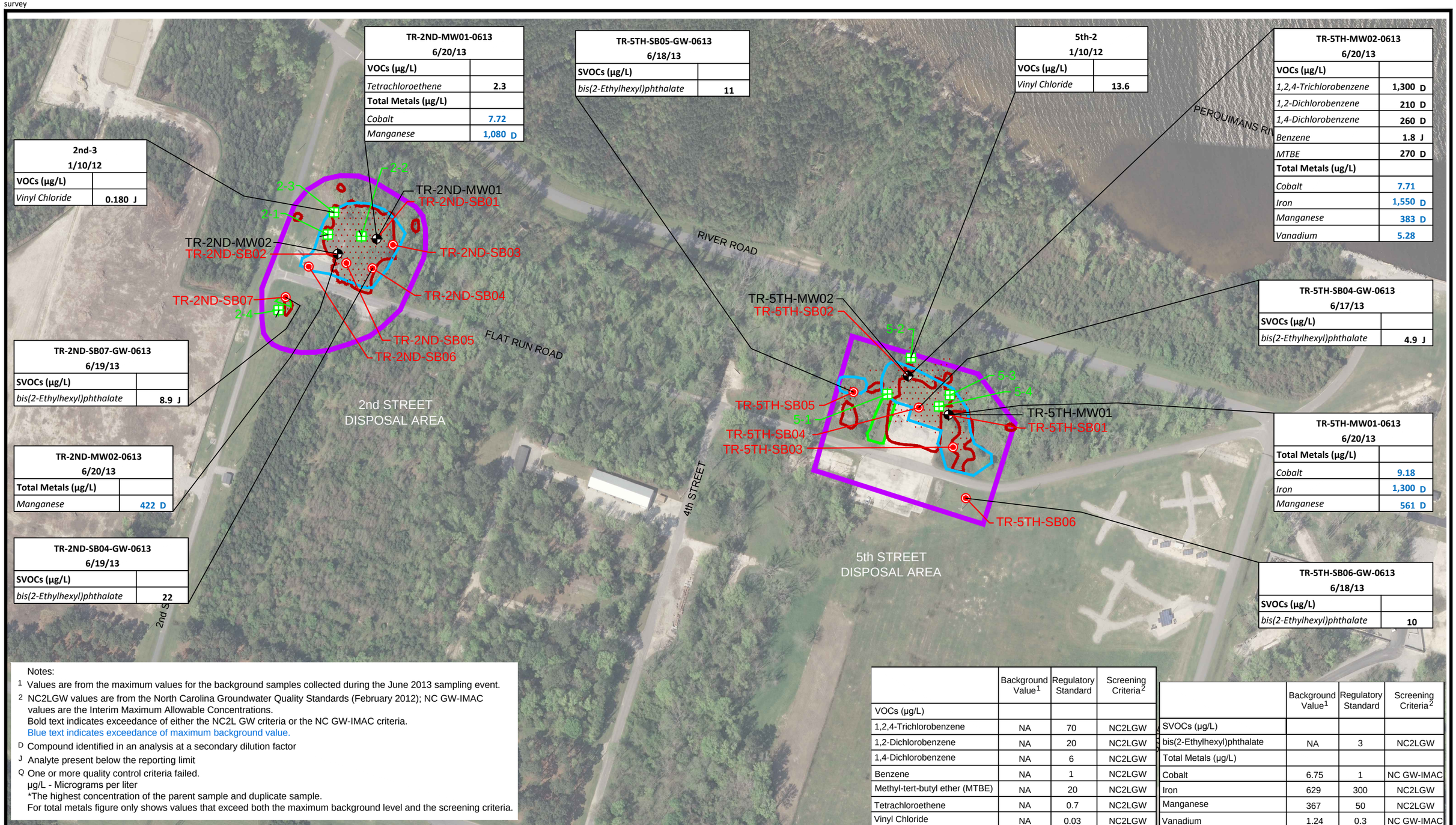

Notes:

1 Values are from the maximum values for the background samples collected during the June 2013 sampling event.

2 NC2LGW values are from the North Carolina Groundwater Quality Standards (February 2012); NC GW-IMAC values are the Interim Maximum Allowable Concentrations.
Bold text indicates exceedance of either the NC2L GW criteria or the NC GW-IMAC criteria.
Blue text indicates exceedance of maximum background value.

D Compound identified in an analysis at a secondary dilution factor

J Analyte present below the reporting limit

Q One or more quality control criteria failed.

µg/L - Micrograms per liter

*The highest concentration of the parent sample and duplicate sample.

For total metals figure only shows values that exceed both the maximum background level and the screening criteria.

	Background Value[1]	Regulatory Standard	Screening Criteria[2]
VOCs (µg/L)			
1,2,4-Trichlorobenzene	NA	70	NC2LGW
1,2-Dichlorobenzene	NA	20	NC2LGW
1,4-Dichlorobenzene	NA	6	NC2LGW
Benzene	NA	1	NC2LGW
Methyl-tert-butyl ether (MTBE)	NA	20	NC2LGW
Tetrachloroethene	NA	0.7	NC2LGW
Vinyl Chloride	NA	0.03	NC2LGW

	Background Value[1]	Regulatory Standard	Screening Criteria[2]
SVOCs (µg/L)			
bis(2-Ethylhexyl)phthalate	NA	3	NC2LGW
Total Metals (µg/L)			
Cobalt	6.75	1	NC GW-IMAC
Iron	629	300	NC2LGW
Manganese	367	50	NC2LGW
Vanadium	1.24	0.3	NC GW-IMAC

Legend

- Investigation Area
- Previous Sample Location (2012)
- Subsurface Soil Sample Location
- Monitoring Well Locations
- Potential Waste / Debris Area (2013)
- Anomalous Area (2013)
- Elevated Electromagnetic Induction Response Area (2011)

N W E S

0 100 200 Feet

Figure 10
Groundwater Analytical Results - Exceedances Only
Towers Road Phase I Remedial Investigation
Harvey Point Defense Testing Activity
Hertford, North Carolina

CUES MappingServices

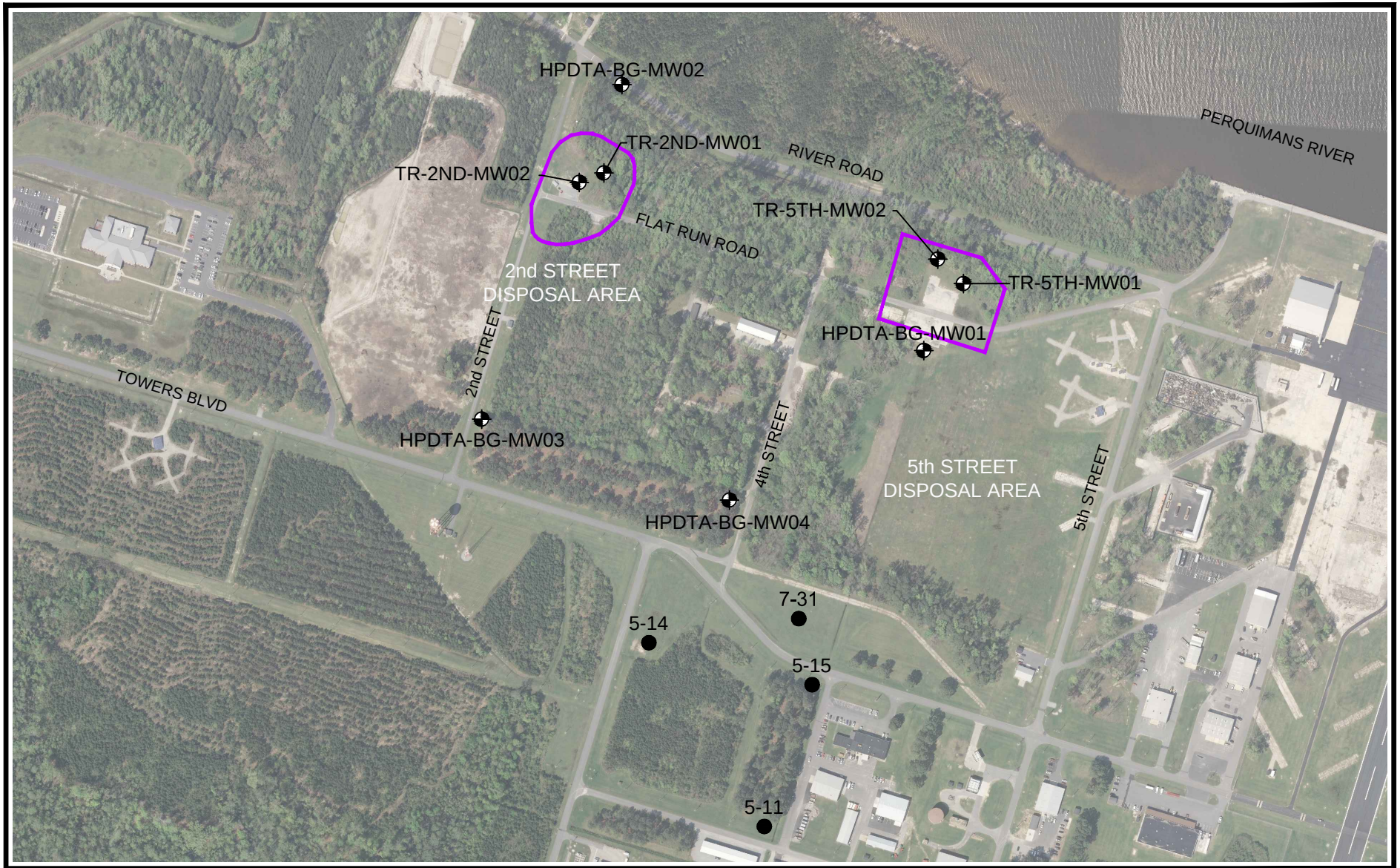

Legend

- Investigation Area
- Water Supply Well
- Monitoring Well

N
W E
S

0 250 500 Feet

Figure 11
Monitoring and Water Supply Well Locations
Towers Road Phase I Remedial Investigation
Harvey Point Defense Testing Activity
Hertford, North Carolina

CUES MappingServices

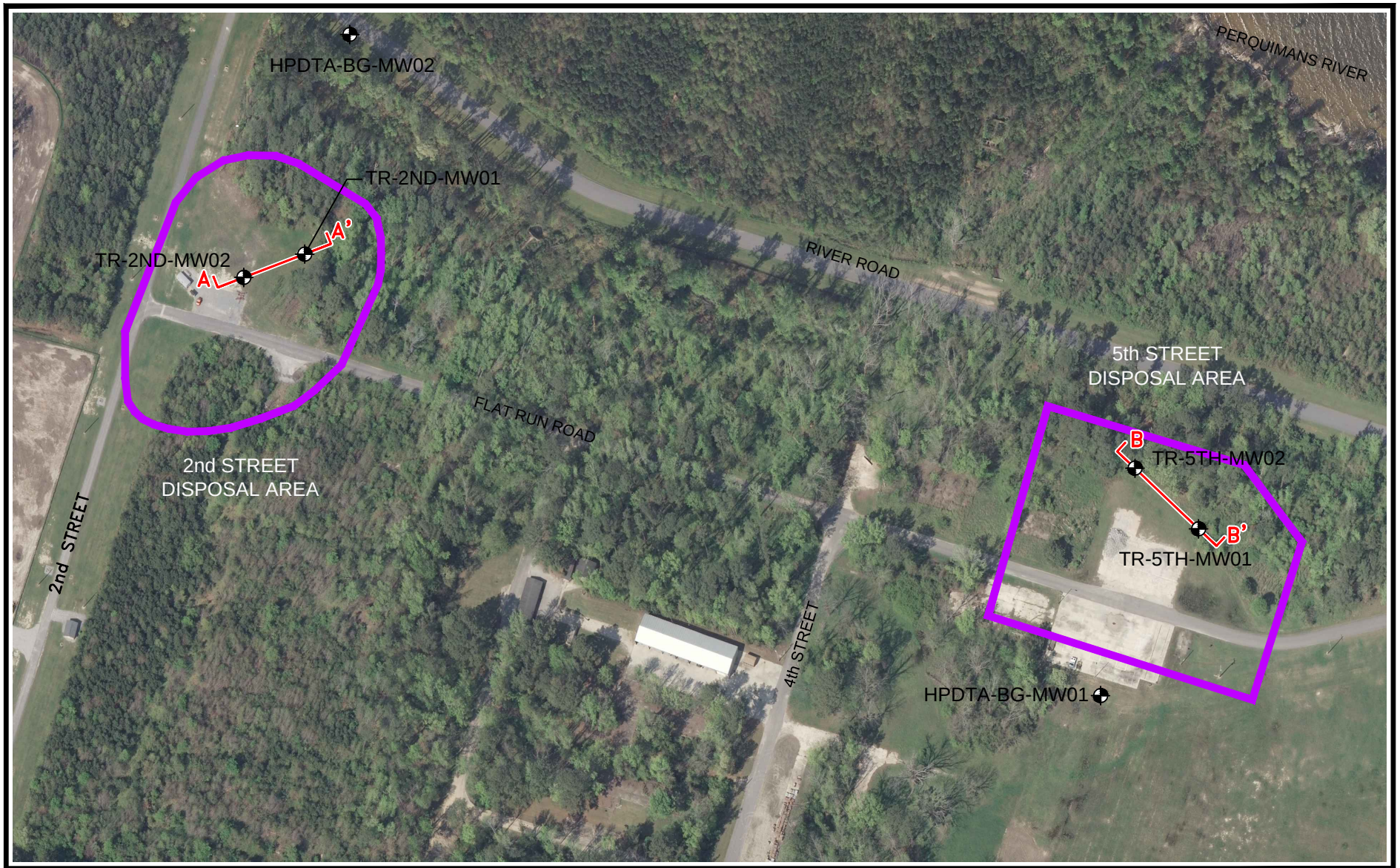

Legend

- Investigation Area
- Monitoring Well
- A A' Cross Section

N
W E
S

0 100 200 Feet

Figure 12
Location of Geological Cross Sections
Towers Road Phase I Remedial Investigation
Harvey Point Defense Testing Activity
Hertford, North Carolina

CUES MappingServices

survey

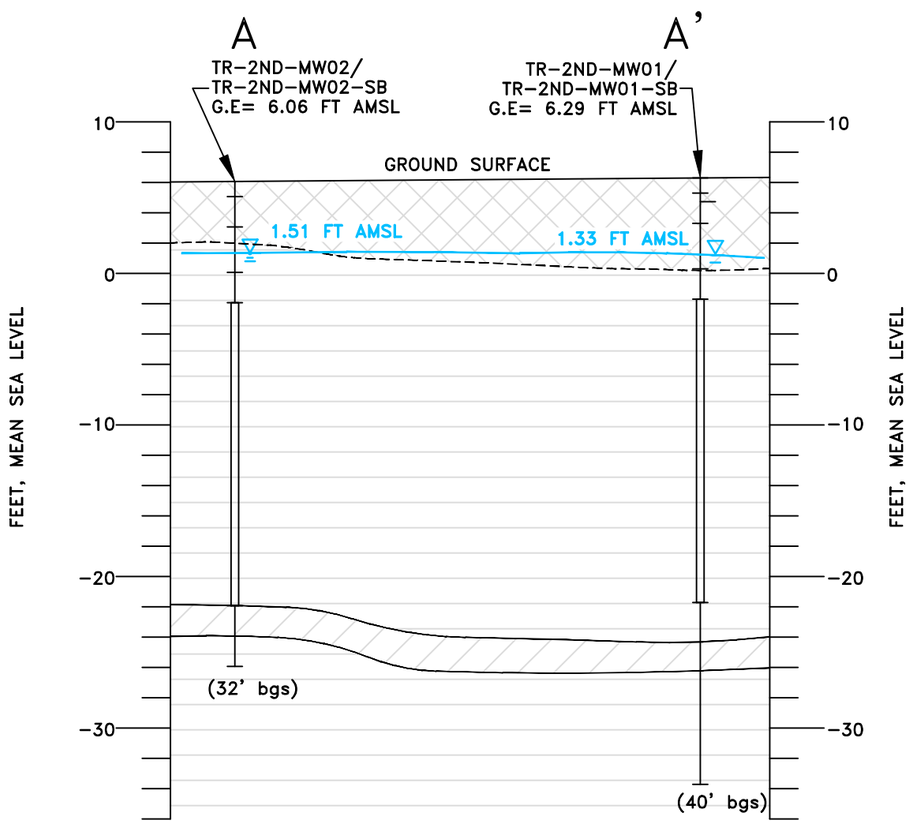

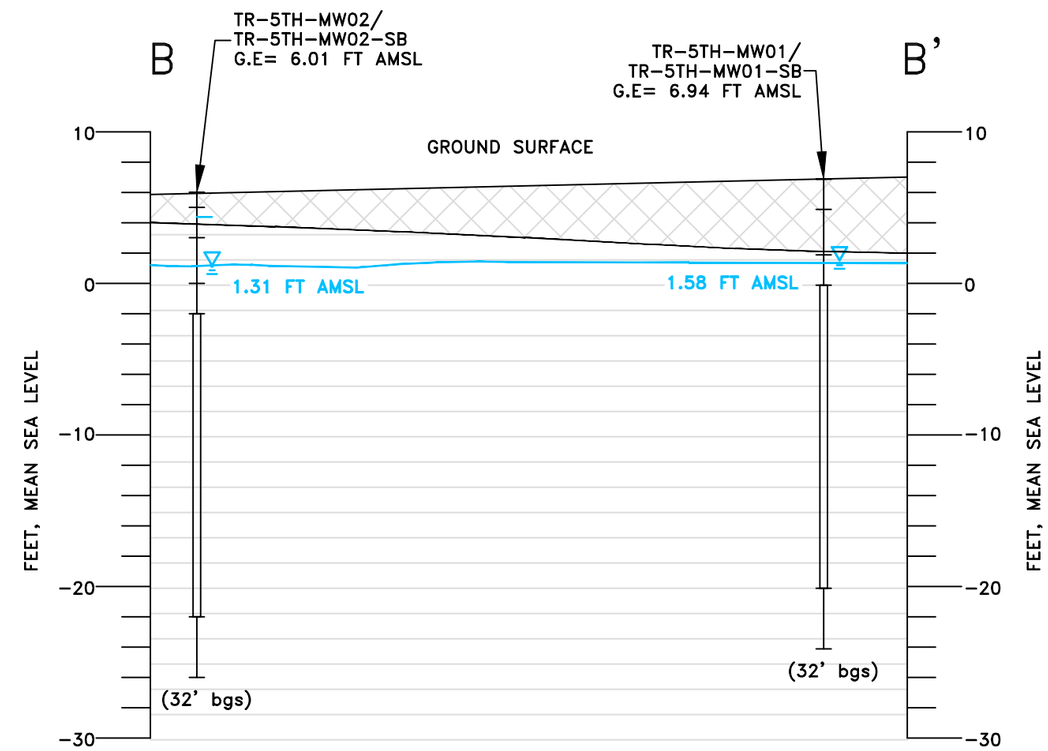

Legend

- Potentiometric Surface (June 20, 2013)
- Well Screen
- bgs Below Ground Surface
- G.E Ground Elevation
- FT AMSL Feet Above Mean Sea Level

Lithology

- Debris
- Silty / Clayey Sand
- Clay / Clayey Silt

Note

This cross section is interpretative and was prepared by interpolation between monitoring well borings and test pit locations. Actual conditions between monitoring well borings and test pit locations may differ from

0 15 30 Feet
Horizontal Scale

0 5 10 Feet
Vertical Scale

Figure 13
Geological Cross Sections A-A' and B-B'
Towers Road Phase I Remedial Investigation
Harvey Point Defense Testing Activity
Hertford, North Carolina

CUES MappingServices

Attachment A
Site Photographs

TABLE A-1

Towers Road Disposal Areas Phase I RI Photo Log

Towers Road Disposal Areas Phase I RI Report

Harvey Point Defense Testing Activity

Hertford, North Carolina

CTO Number	Project Number	Project Name	Site	Photo Number	Date	Time	Task and Description	Taken By
0020	439611	Phase I RI	Towers Road Disposal Areas	1	05/23/2013	13:35	Silt Fence at 2nd Street	B Murphy
0020	439611	Phase I RI	Towers Road Disposal Areas	2	05/23/2013	13:35	Silt Fence at 2nd Street	B Murphy
0020	439611	Phase I RI	Towers Road Disposal Areas	3	05/23/2013	13:37	Vegetation Clearance at 5th Street	B Murphy
0020	439611	Phase I RI	Towers Road Disposal Areas	1	05/30/2013	10:11	Debris from Test Pit	B Murphy
0020	439611	Phase I RI	Towers Road Disposal Areas	2	05/30/2013	10:11	Debris from Test Pit	B Murphy
0020	439611	Phase I RI	Towers Road Disposal Areas	3	05/30/2013	10:11	Debris from Test Pit	B Murphy
0020	439611	Phase I RI	Towers Road Disposal Areas	4	05/30/2013	10:11	Debris in Test Pit	B Murphy
0020	439611	Phase I RI	Towers Road Disposal Areas	5	05/30/2013	10:11	No Debris in Test Pit	B Murphy
0020	439611	Phase I RI	Towers Road Disposal Areas	6	05/30/2013	10:12	Debris in Test Pit	B Murphy
0020	439611	Phase I RI	Towers Road Disposal Areas	7	05/30/2013	10:13	North Side of 2nd Street Test Pitting	B Murphy
0020	439611	Phase I RI	Towers Road Disposal Areas	8	05/30/2013	10:14	Debris in Test Pit	B Murphy
0020	439611	Phase I RI	Towers Road Disposal Areas	9	05/30/2013	10:15	Surficial Debris in Vegetation Cleared Area at North Side of 2nd Stree	B Murphy
0020	439611	Phase I RI	Towers Road Disposal Areas	10	05/30/2013	10:15	Surficial Debris in Vegetation Cleared Area at North Side of 2nd Stree	B Murphy
0020	439611	Phase I RI	Towers Road Disposal Areas	11	05/30/2013	10:15	Vegetation Cleared Area at North Side of 2nd Street	B Murphy
0020	439611	Phase I RI	Towers Road Disposal Areas	12	05/30/2013	10:16	Vegetation Cleared Area at North Side of 2nd Street	B Murphy
0020	439611	Phase I RI	Towers Road Disposal Areas	13	05/30/2013	10:16	Vegetation Cleared Area at North Side of 2nd Street	B Murphy
0020	439611	Phase I RI	Towers Road Disposal Areas	14	05/30/2013	10:16	Vegetation Cleared Area at North Side of 2nd Street	B Murphy
0020	439611	Phase I RI	Towers Road Disposal Areas	15	05/30/2013	10:16	Test Pitting at 2nd Street	B Murphy
0020	439611	Phase I RI	Towers Road Disposal Areas	16	05/30/2013	10:20	Debris in Test Pit	B Murphy
0020	439611	Phase I RI	Towers Road Disposal Areas	17	05/30/2013	10:30	South side of 2nd Street with Pin Flags for Geophysical Survey	B Murphy
0020	439611	Phase I RI	Towers Road Disposal Areas	18	05/30/2013	10:33	South side of 2nd Street with Pin Flags for Geophysical Survey	B Murphy
0020	439611	Phase I RI	Towers Road Disposal Areas	19	05/30/2013	10:33	GPS Equipment at 5th Street for Geophysical Survey	B Murphy
0020	439611	Phase I RI	Towers Road Disposal Areas	20	05/30/2013	10:33	North Side of 5th Street with Pin Flags for Geophysical Survey	B Murphy
0020	439611	Phase I RI	Towers Road Disposal Areas	21	05/30/2013	10:34	North Side of 5th Street with Pin Flags for Geophysical Survey	B Murphy
0020	439611	Phase I RI	Towers Road Disposal Areas	22	05/30/2013	10:34	North Side of 5th Street with Pin Flags for Geophysical Survey	B Murphy
0020	439611	Phase I RI	Towers Road Disposal Areas	23	05/30/2013	10:34	North Side of 5th Street with Pin Flags for Geophysical Survey	B Murphy
0020	439611	Phase I RI	Towers Road Disposal Areas	24	05/30/2013	10:34	North Side of 5th Street with Pin Flags for Geophysical Survey	B Murphy
0020	439611	Phase I RI	Towers Road Disposal Areas	25	05/30/2013	10:34	North Side of 5th Street with Pin Flags for Geophysical Survey	B Murphy
0020	439611	Phase I RI	Towers Road Disposal Areas	26	05/30/2013	10:40	North Side of 5th Street with Pin Flags for Geophysical Survey	B Murphy
0020	439611	Phase I RI	Towers Road Disposal Areas	27	05/30/2013	10:59	Surficial Debris at North Side of 2nd Street	B Murphy
0020	439611	Phase I RI	Towers Road Disposal Areas	28	05/30/2013	11:01	Debris from Test Pit	B Murphy
0020	439611	Phase I RI	Towers Road Disposal Areas	29	05/30/2013	11:02	Debris from Test Pit	B Murphy
0020	439611	Phase I RI	Towers Road Disposal Areas	30	05/30/2013	11:02	No Debris in Test Pit	B Murphy
0020	439611	Phase I RI	Towers Road Disposal Areas	31	05/30/2013	11:05	Surficial debris at 5th Street	B Murphy
0020	439611	Phase I RI	Towers Road Disposal Areas	1	06/10/2013	13:48	Drilling at 2nd Street	B Murphy
0020	439611	Phase I RI	Towers Road Disposal Areas	2	06/10/2013	13:48	Drilling at 2nd Street	B Murphy
0020	439611	Phase I RI	Towers Road Disposal Areas	3	06/10/2013	13:51	Soil Boring Cores from 2nd Street Drilling	B Murphy
0020	439611	Phase I RI	Towers Road Disposal Areas	4	06/10/2013	13:51	Soil Boring Cores from 2nd Street Drilling	B Murphy
0020	439611	Phase I RI	Towers Road Disposal Areas	5	06/10/2013	13:51	Soil Boring Cores from 2nd Street Drilling	B Murphy
0020	439611	Phase I RI	Towers Road Disposal Areas	6	06/10/2013	14:07	Soil Boring Cores from 2nd Street Drilling	B Murphy
0020	439611	Phase I RI	Towers Road Disposal Areas	7	06/10/2013	14:10	Drilling at 2nd Street	B Murphy
0020	439611	Phase I RI	Towers Road Disposal Areas	8	06/10/2013	13:57	Soil from 2nd Street	B Murphy
0020	439611	Phase I RI	Towers Road Disposal Areas	9	06/10/2013	14:00	PID readings of soil from 2nd Street	B Murphy
0020	439611	Phase I RI	Towers Road Disposal Areas	1	09/04/2013	9:46	IDW Pickup	B Murphy
0020	439611	Phase I RI	Towers Road Disposal Areas	2	09/04/2013	9:46	IDW Pickup	B Murphy
0020	439611	Phase I RI	Towers Road Disposal Areas	3	09/04/2013	9:46	IDW Pickup	B Murphy
0020	439611	Phase I RI	Towers Road Disposal Areas	4	09/04/2013	9:47	IDW Pickup	B Murphy

Site Photographs

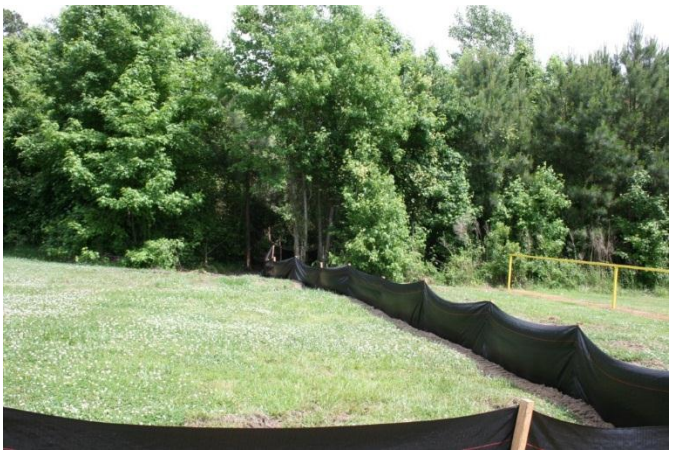

Photo 1, 5/23/2013

Photo 2, 5/23/2013

Photo 3, 5/12/2013

Photo 1, 5/30/2013

Photo 2, 5/30/2013

Photo 3, 5/30/2013

Photo 4, 5/30/2013

Photo 5, 5/30/2013

Photo 6, 5/30/2013

Photo 7, 5/30/2013

Photo 8, 5/30/2013

Photo 9, 5/30/2013

Photo 10, 5/30/2013

Photo 11, 5/30/2013

Photo 12, 5/30/2013

Photo 13, 5/30/2013

Photo 14, 5/30/2013

Photo 15, 5/30/2013

Photo 16, 5/30/2013

Photo 17, 5/30/2013

Photo 18, 5/30/2013

Photo 19, 5/30/2013

Photo 20, 5/30/2013

Photo 21, 5/30/2013

Photo 22, 5/30/2013

Photo 23, 5/30/2013

Photo 24, 5/30/2013

Photo 25, 5/30/2013

Photo 26, 5/30/2013

Photo 27, 5/30/2013

Photo 28, 5/30/2013

Photo 29, 5/30/2013

Photo 30, 5/30/2013

Photo 31, 5/30/2013

Photo 1, 6/10/2013

Photo 2, 6/10/2013

Photo 3, 6/10/2013

Photo 4, 6/10/2013

Photo 5, 6/10/2013

Photo 6, 6/10/2013

Photo 7, 6/10/2013

Photo 8, 6/10/2013

Photo 9, 6/10/2013

Photo 1, 9/4/2013

Photo 2, 9/4/2013

Photo 3, 9/4/2013

Photo 4, 9/4/2013

Attachment B
Geophysical Survey Report

NAeVA GEOPHYSICS INC.

THE LEADER IN SUBSURFACE DETECTION

Subsurface Geophysical Surveys

GPR
MAGNETICS
ELECTROMAGNETICS
SEISMICS
RESISTIVITY
UTILITY LOCATION
UXO DETECTION
BOREHOLE CAMERA
STAFF SUPPORT

GEOPHYSICAL INVESTIGATION REPORT

Towers Road Disposal Area

(2nd Street Disposal Area and 5th Street Disposal Area)

Hertford, North Carolina

Dates of Investigation:
May 29th – May 31st, 2013

FINAL
12 August 2013

Prepared for
CH2M HILL
5701 Cleveland Street, Suite 200
Virginia Beach, VA 23462

NEW YORK
225 N. Route 303
Suite 102
Congers
New York 10920
(845) 268-1800
(845) 268-1802 Fax

VIRGINIA
P.O. Box 7325
Charlottesville
Virginia 22906
(434) 978-3187
(434) 973-9791 Fax

TABLE OF CONTENTS

1.0 INTRODUCTION 1

1.1 BACKGROUND AND OBJECTIVES 1

1.2 SCOPE OF WORK 1

1.3 SITE LOCATION AND DESCRIPTION 1

2.0 EQUIPMENT 3

2.1 GEONICS EM31-MK2 3

2.2 TRIMBLE RTK GPS 3

3.0 METHODS 5

3.1 SUMMARY OF WORK PERFORMED 5

3.2 DIGITAL GEOPHYSICAL MAPPING 5

3.2.1 EM31-MK2 Survey 5

3.3 DATA PROCESSING 6

3.3.1 Raw Data Transfer 6

3.3.2 Preprocessing 6

3.3.3 Final Processing 6

3.3.4 Data Deliverables 6

4.0 QUALITY CONTROL 8

4.1 PERFORMANCE CRITERIA AND MEASURED QUALITY OBJECTIVES (MQOS) 8

4.1.1 Down-line Data Density (Along Line) 8

4.1.2 Survey Coverage (Across Line) 8

4.1.3 DGM System Data Repeatability 8

4.2 QUALITY CONTROL TESTS 8

4.2.1 DGM System Positioning 8

4.2.2 Background and Spike Test 9

4.2.3 Vibration Test 9

4.2.4 Dynamic Response Test 9

5.0 RESULTS 10

5.1 QUALITY CONTROL 10

5.2 EM31-MK2 SURVEY 11

6.0 CONCLUSIONS 12

7.0 REFERENCES 13

APPENDIX A: Sample Quality Control Figures

APPENDIX B: EM31-MK2 Final Site Mosaics

COMPACT DISC: Project Deliverables

LIST OF TABLES

Table 1: GPS control points in State Plane North Carolina U.S. Survey Feet 8
Table 2: EM31 Static Tests Mean Response Values 10
Table 3: EM31 Dynamic Tests Results 10

CD CONTENTS

- Raw Data
  - Field notes and database forms
  - Raw geophysical data files
  - Preprocessed data XYZ files
  - GPS data points
- Processed Data
  - Final processed XYZ files
  - Final repeat XYZ, map, and PDF plots
  - PDF and Geosoft color-contoured maps of geophysical data
  - Dynamic Repeatability processed XYZ, PDF and Geosoft color-contoured map
  - Static, cable shake, and personnel test processed XYZ, map, and PDF plots
- Mosaic
  - PDF and Geosoft map formats
- Report
  - Microsoft Word and PDF formats

ACRONYMS AND ABBREVIATIONS

ASCII	American Standard Code for Information Interchange
BGS	Below Ground Surface
CD	Compact Disc
cm	Centimeter
DGM	Digital Geophysical Mapping
EM	Electromagnetic
EM31	Geonics EM31-MK2
ft	Feet
FTP	File Transfer Protocol
GNSS	Global Navigation Satellite System
GPS	Global Positioning System
HAZWOPER	Hazardous Waste Operations and Emergency Response
Hz	Hertz
in	Inch
m	Meter
MEC	Munitions and Explosives of Concern
MPC	Measured Performance Criteria
MQOs	Measured Quality Objectives
mS/m	milliSiemens per meter
NAEVA	NAEVA Geophysics, Inc.
NMEA	National Marine Electronics Association
OPUS	On-line Positioning Users Service
OSHA	Occupational Safety and Health Administration
ppt	Parts Per Thousand
QC	Quality Control
RTK	Real-Time Kinematic
sft	U.S. Survey Feet
UHF	Ultra High Frequency

1.0 INTRODUCTION

1.1 BACKGROUND AND OBJECTIVES

NAEVA Geophysics, Inc. (NAEVA) conducted a geophysical investigation utilizing the EM31-MK2 (EM31) for CH2M HILL at the Towers Road Disposal Area located in Hertford, North Carolina from May 29th – 31st, 2013. The survey was at two separate sites totaling approximately 3.5 acres. The two sites encompassing the Towers Road Disposal Area are referred to as the 2nd Street Disposal Area and 5th Street Disposal Area. The objective of the geophysical survey was to delineate the lateral extent (i.e. footprint) of potential buried metallic and non-metallic waste, debris, and obstructions (e.g. former building foundations). To the extent possible, the geophysical survey was also designed to provide information on potential underground metallic utilities. This report summarizes the equipment, methods, and results of the geophysical investigation.

1.2 SCOPE OF WORK

NAEVA's personnel organization for the project consisted of a Field Geophysicist and Field Geo-Technician on-site with support from the Project Geophysicist, and Geophysical Data Processors at NAEVA's Charlottesville, Virginia office. NAEVA on-site personnel had 40-hour Occupational Safety and Health Administration (OSHA) Hazardous Waste Operations and Emergency Response (HAZWOPER) training, with current (annual) 8-hour refresher training. NAEVA's geophysical functions included the following:

- Mobilization of qualified personnel and geophysical equipment;
- Daily quality control (QC) of geophysical data and positioning equipment;
- EM31 Digital Geophysical Mapping (DGM) of 3.5 acres at 5ft line spacing;
- Data processing, analysis, and preparation of data deliverables;
- Database management and reporting.

1.3 SITE LOCATION AND DESCRIPTION

Towers Road Disposal Area is located in Hertford, North Carolina and consists of two separate sites totaling approximately 3.5 acres. The two sites encompassing the Towers Road Disposal Area are referred to as the 2nd Street Disposal Area and 5th Street Disposal Area. Approximately 1.5 to 2 acres of the total 3.5 acres required brush clearing, which was coordinated by CH2M HILL prior to the start of the geophysical survey.

The 5th Street Disposal Area contains three buildings and an asphalt paved area. The 2nd Street Disposal Area is primarily a grassy field. The ground surface is relatively flat. The geology reportedly consists of sandy soils with lesser amounts of silt and clay. Groundwater is reportedly less than 5 feet below ground surface.

Munitions and explosives of concern (MEC) and material potentially presenting an explosive hazard (MPPEH) were assumed to not be a factor for the geophysical survey at these sites.

2.0 EQUIPMENT

2.1 GEONICS EM31-MK2

The Geonics EM31-MK2 consists of boom-mounted coplanar electromagnetic transmitter and receiver coils that are mounted at a fixed distance of 12 ft apart. A current applied to the transmitter coil produces a time-varying magnetic field, which induces small secondary currents within the earth. These currents generate a secondary magnetic field, which is detected along with the primary field by the receiver coil. The instrument provides an output of both the quadrature phase (conductivity) and in-phase components of the induced electromagnetic field, which are recorded simultaneously. The in-phase component is primarily used in searching for buried metal, measuring in units of relative parts per thousand (ppt) of the Earth's magnetic field. A negative response is most often expected over areas of shallow buried metal debris in the conductivity measurement. For the in-phase measurement both a large negative and/or positive value could reflect buried metal. It should be noted that the relatively large coil separation of the EM31 gives the in-phase component a low susceptibility to discreet metallic items or small concentrations of metal. The quadrature-phase measures electrical conductivity in milliSiemens per meter (mS/m). Electrical conductivity is a function of porosity, conductivity of included soil moisture, degree of saturation, and the type of soil and rock. The absolute values of terrain conductivity are not usually diagnostic, but their spatial variations are important. The ability to identify lateral variations in the shallow subsurface makes quadrature-phase EM31 data very useful in mapping subsurface changes across a site.

EM31 data were collected along parallel transects spaced 5 ft apart at a rate of 10 readings per second. The EM31 was carried at a height of approximately 2.8 ft and was operated in the vertical dipole mode, where the maximum depth of investigation was 18 ft and the greatest portion of the instrument response was affected by material in the 3 to 9 ft depth range. Data were recorded using an Allegro field computer running the EM31 acquisition software.

2.2 TRIMBLE RTK GPS

The geophysical data were positioned by using a Trimble R7 Global Positioning System (GPS) base station and an R7 rover receiver, operating in Real-Time Kinematic (RTK) mode to survey in the corners of the local grid that was established at each area. The geophysical data were collected in local coordinates and then translated to geodetic coordinates using the surveyed in grid corners.

The Trimble R7 GPS is a 24-channel dual frequency RTK receiver that uses both L1 and L2 satellite frequencies. The GPS base station was setup on a location with unknown coordinates and positional readings were recorded for a period of 8 hours. These recorded locations were then uploaded to On-line Positioning Users Service (OPUS) and a corrected coordinate was provided having accuracy within a few centimeters (cm) of the true coordinate (Table 1). , The base station sends positional corrections at a rate of 1 hertz (Hz) to the rover via radio link using a Trimmark 3 Ultra High Frequency (UHF) radio modem. Based on the results of the GPS QC test, a horizontal accuracy of 7 centimeters was achieved. The accuracy of the GPS rover depends largely on the accuracy of the base station and the number of satellites visible, which may be obstructed by local features such as buildings or heavy tree cover.

3.0 METHODS

3.1 SUMMARY OF WORK PERFORMED

The NAEVA field team mobilized on the 28h of May and commenced EM31 DGM production work on the 29th following site orientation. The team demobilized on the 1st of June after the completion of planned field activities.

The daily schedule, based on a 10-hour workday, was as follows, unless otherwise noted in daily work logs:

- Morning safety meeting;
- Equipment setup and 15-minute instrument warm-up;
- Instrument calibration and verification;
- DGM using EM31;
- End of day instrument verification;
- Disassemble and store equipment.

3.2 DIGITAL GEOPHYSICAL MAPPING

3.2.1 EM31-MK2 Survey

The EM31 was carried parallel to direction of travel at hip level, approximately 2.8 ft above the ground surface. All EM31 data were collected in auto mode at a rate of 10 readings per second consistently along 5 ft spaced transects. Due to overhead canopy at both sites, the instrument was operated using fiducial positioning, with markers placed in the data at and interval of 100ft down line. Lines were numbered according to the local grid and the operator walked at an even pace, pressing the fiducial button over each flag. New lines were created for each transect or for gaps around vegetation. At the 2nd Street site and the southeastern section of the 5th Street site, lines were oriented in an east-west direction. At the remainder of the 5th Street site the lines were oriented in a north-south direction.. Repeat data were collected for each dataset for quality control purposes.

3.3 DATA PROCESSING

3.3.1 Raw Data Transfer

Digital geophysical data and positional data were transferred from field data loggers to a field computer for initial data quality assessments and editing. Using DAT31W software, the fiducial markers in the EM31 data were adjusted to the down line distance between flags and the data was exported to an ASCII file. If an issue with a file had been noted, such as a missing line or bad readings, the cause would be investigated and corrected as necessary; however, no data quality issues were identified. The raw data were then transferred to the NAEVA File Transfer Protocol (FTP) site for processing, analysis, and Quality Control (QC) using Geosoft's Oasis montaj software.

3.3.2 Preprocessing

Converted raw data files were imported into Geosoft's Oasis montaj to perform the following:

- Review and finalize all QC tests prior to processing of the DGM data for that day;
- Conversion of local coordinates to projected North America Datum (NAD83) North Carolina State Plane coordinates, U.S. Survey Feet;
- Evaluate data density;
- Apply default lag correction;
- Generate preliminary contour map(s) from gridded data;
- Generate preliminary original versus repeat profiles by dataset;
- Generate formatted ASCII files containing preprocessed data by dataset.

3.3.3 Final Processing

After completion of preprocessing, the data were further evaluated and processed to generate final processed data files. Final processing steps included:

- Evaluation and refinement of lag correction;
- Additional digital filtering and enhancement, as necessary;
- Generation of formatted ASCII files containing processed data by dataset;
- Generation of final maps for each area displaying contoured gridded data and culture;
- Generation of final original versus repeat profiles by dataset.

3.3.4 Data Deliverables

Daily data deliverables were organized by area and submitted as completed. The hard copy of this report contains a compact disc with all data deliverables.

Processed data deliverables included:

- ASCII and Geosoft .GDB formats of processed data corrected for latency/lag corrections,
    - Data were geo-referenced using the NAD83 North Carolina State Plane, U.S Survey Feet;
    - ASCII format delimited fields as x, y, v1, v2, etc., (where x and y are project coordinates, and v1, v2, v3, etc., are the instrument readings; the last data field is a time stamp);
- Grid maps in Geosoft packed map and PDF formats of color-contoured geophysical results with anomaly selections shown and labeled at a readable scale;
- Composite mosaic map in Geosoft packed map and PDF formats.

4.0 QUALITY CONTROL

4.1 PERFORMANCE CRITERIA AND MEASURED QUALITY OBJECTIVES (MQOS)

4.1.1 Down-line Data Density (Along Line)

The criterion for down-line data densities along the survey transect was to have sufficient data collected along each transect to achieve the project objective. Maximum permissible spacing between data points was 2 feet unless an obstruction or hazard was present. A spacing greater than this would not meet the MQO that is specified in the work plan. This was evaluated by analyzing data point separation.

4.1.2 Survey Coverage (Across Line)

The criterion for coverage was that the lane spacing varied by no more than 2x the intended lane spacing of 5 feet, unless an obstruction or hazard was present. This results in a maximum permissible lane spacing of 10 feet for the EM31-MK2.

4.1.3 DGM System Data Repeatability

The criterion for DGM system data repeatability was to verify repeatability of the data and was performed at the end of each survey day. Approximately 2% of the survey area was repeated at the end of each survey day. Because of the intrinsic difficulty of following the exact path for collecting repeat data, the results from this test were qualitatively evaluated.

4.2 QUALITY CONTROL TESTS

4.2.1 DGM System Positioning

The criterion for DGM system positioning was that the coordinates being obtained from the positioning system were of sufficient accuracy to allow for accurate positioning for translating the local grids into correctly positioned geodetic coordinates. The measurement performance criterion (MPC), as stated in the work plan, was that the positional error at known monuments did not exceed ± 0.1 meters. A reoccupation test was performed at the beginning of each workday. Table 1 below lists GPS control points used during the investigation.

Table 1: GPS control points in State Plane North Carolina U.S. Survey Feet

Control Point ID	Easting (sft)	Northing (sft)
5thSTBase	866886.752	2788361.33
GPSQCPt	866887.29	2788326.427

4.2.2 Background and Spike Test

Static background tests were performed at the start and end of each survey day. The test was conducted in an area that was relatively free of sources of interference, and the EM31-MK2 remained stationary. Data were collected for at least 1 minute with the instrument placed on the ground surface. The instrument was then raised to the intended height for the production survey, a new survey line within the data file was started, and the process was repeated. The purpose of these tests was to assess background conditions (i.e. effect of the ground component) and determine whether unusual levels of instrument or ambient noise existed in the data from the start of the day through the end of the day. The MPC, as stated in the work plan, was no excessive data spikes, above ± 5 mS/m from mean value in quadrature and ± 2 ppt from mean value in in-phase.

4.2.3 Vibration Test

A vibration (i.e. cable shake) test was performed at the start of each survey day. The test was conducted by recording data for at least 1 minute with the EM31-MK2 either on the ground surface or at the intended survey height. During data collection, the operator shook the instrument cables and connections while observing for noise spikes. The purpose of this test was to identify potential malfunctioning parts in order to avoid unwanted noise in the data as the operator is walking around the site with the instrument. The MPC, as stated in the work plan, was no excessive data spikes, above ± 5 mS/m from mean value in quadrature and ± 2 ppt from mean value in in-phase.

4.2.4 Dynamic Response Test

The dynamic response test was performed at the start and end of each survey day by collecting data over the EM31 box since no culverts or other large subsurface objects were identified. On the 29th only the lid of the EM31 box was used and the response was very low, so for the tests collected on the 30th and 31st, the entire EM31 box was used. Therefore, there is a difference in response between the 29th and the 30th/31st data. The purpose of the dynamic test was to verify that the instrument can consistently detect the feature. The dynamic test was conducted at the beginning and end of each survey day. The MPC, as stated in the work plan, was to show that the EM31 could consistently detect the feature for both positioning and response.

5.0 RESULTS

5.1 QUALITY CONTROL

Background static tests were within the acceptable range if there were no excessive data spikes, above ± 5 mS/m from mean value in quadrature and ± 2 ppt from mean value in in-phase. Standard response data showed consistent detection throughout the investigation (Table 2). The cable shake exhibited no interference as a result of cable motion. The dynamic response test results were repeatable for both positioning and response (Table 3).

Table 2: EM31 Static Tests Mean Response Values

EM31 Static Tests					
Date	File Name	On Ground Conductivity mS/m (Mean)	Collection Height Conductivity mS/m (Mean)	On Ground Inphase ppt (Mean)	Collection Height Inphase ppt (Mean)
5/29/2013	0529QC1	15.86	13.18	-0.29	-0.24
5/29/2013	0529QC2	16.15	13.46	-0.33	-0.56
5/30/2013	0530QC1	15.51	13.12	-0.22	-0.079
5/30/2013	0530QC2	16.32	13.26	-0.32	-0.55
5/31/2013	0531QC1	14.91	12.49	-0.31	-0.05
5/31/2013	0531QC2	16.1	13.06	-0.39	-0.63

Table 3: EM31 Dynamic Tests Results

EM31 Dynamic Tests								
Date	File Name	Conductivity mS/m (1st Pass)	Conductivity mS/m (2nd Pass)	Conductivity mS/m (Average)	Inphase ppt (1st Pass)	Inphase ppt (2nd Pass)	Inphase ppt (Average)	Comments
5/29/2013	0529LT1	11.35	11.8	11.575	-0.07	-0.01	-0.04	Test Item was only with Lid of EM31 Box
5/29/2013	0529LT2	12	12.3	12.15	0.35	0.32	0.335	Test Item was only with Lid of EM31 Box
5/30/2013	0530LT1	5.5	5.5	5.5	-10	-9.74	-9.87	Test Item was Whole EM31 Box
5/30/2013	0530LT2	7.58	7.8	7.69	-8.22	-7.04	-7.63	Test Item was Whole EM31 Box
5/31/2013	0531LT1	5.15	5.7	5.425	-9.45	-9.24	-9.345	Test Item was Whole EM31 Box
5/31/2013	0531LT2	6.9	6.53	6.715	-8.9	-8.79	-8.845	Test Item was Whole EM31 Box

GPS equipment checks met the DGM positioning criteria of ± 0.1 meter accuracy at known monuments. DGM data points met data density criteria of 2 foot spacing as well as the coverage criteria of 10 feet spacing or less. Sample QC test figures can be found in Appendix A.

5.2 EM31-MK2 SURVEY

At the 2nd Street area (**Figures 1 and 2 in Appendix B**), there was a slightly elevated response in the conductivity and the in-phase was highly anomalous in the area north of the road extending from the center of the site eastward. This area could be a "Potential Waste/Debris Area" and is identified as such on **Figures 1 and 2**. In the southwestern corner of the area, there is a small "Anomalous Area" identified and labeled on both Figures 1 and 2. This features is likely to be attributed to culture, the fence running around the site or the culvert that runs parallel to 2nd Street . There is also a suspected utility that is identified on **Figures 1 and 2** in the southeast corner of the site. For the 5th Street area (**Figures 3 and 4 in Appendix B**), the EM31 was influenced by the cultural objects existing at the site. However, there is a linear response in both the conductivity and the in-phase just north of the large concrete slab north of the road that is not attributed to any above ground culture features. From the data it appears that the feature runs E-W north of the concrete slab and then turns to the south on the east side of the slab. This linear feature could possibly be a utility and is label on **Figures 3 and 4** as "Suspected Utility". Also identified as "Suspected Utility" is the linear feature that runs parallel to the road on the north side. There is another anomalous feature on the western side of the northern concrete slab. This area does not have the characteristics of a debris waste/debris area, so it has been identified on the map as an "Anomalous Area". It is possible that it is an extension of the concrete slab. An area to the northwest of the "Anomalous Area" is a "Potential Waste/Debris Area" and has been labeled as such on **Figures 3 and 4**. Final mosaics of quadrature-phase and in-phase data can be found in Appendix B.

6.0 CONCLUSIONS

NAEVA successfully performed EM31-MK2 digital geophysical mapping and data analysis at the 2nd Street and 5th Street disposal areas that make up the Towers Road Disposal Area located in Hertford, North Carolina in accordance with the project Work Plan. Project performance criteria and MQOs were successfully met and maintained throughout the duration of the project. EM31-MK2 data were validated with appropriate QC tests and repeat data. Conductivity and In-phase data plotted over the both areas of the Towers Roads Disposal Area displayed areas of concentrated metal as well as variations in conductivity. Two areas were identified as potential waste/debris areas, one on each site. Three linear features were identified as suspected utilities, one on the 2nd Street site and two on the 5th Street site. One Anomalous Area has been identified on the each of the sites. The Anomalous Area on the 5th Street site is likely to be an extension of the concrete slab and the Anomalous Area on the 2nd Street site is likely to be attributed to either the fence or the culvert nearby.

7.0 REFERENCES

Geonics Limited (1999, December). EM31-MK2 Ground Conductivity Meter Data Logger Operating Instructions, Version 2.00.

CH2M HILL. 2013. Geophysical Survey Work Plan, Towers Road Disposal Area, Hertford, North Carolina. CTO-0020. January

Appendix A

Quality Control Tests

Static Calibration Test

Project: Hertford, NC
Equipment: EM31
Grid/Location: QC Area

Outside range
Acceptable limits

QC1 test
Operator: Geo 1
Date: 05/30/2013

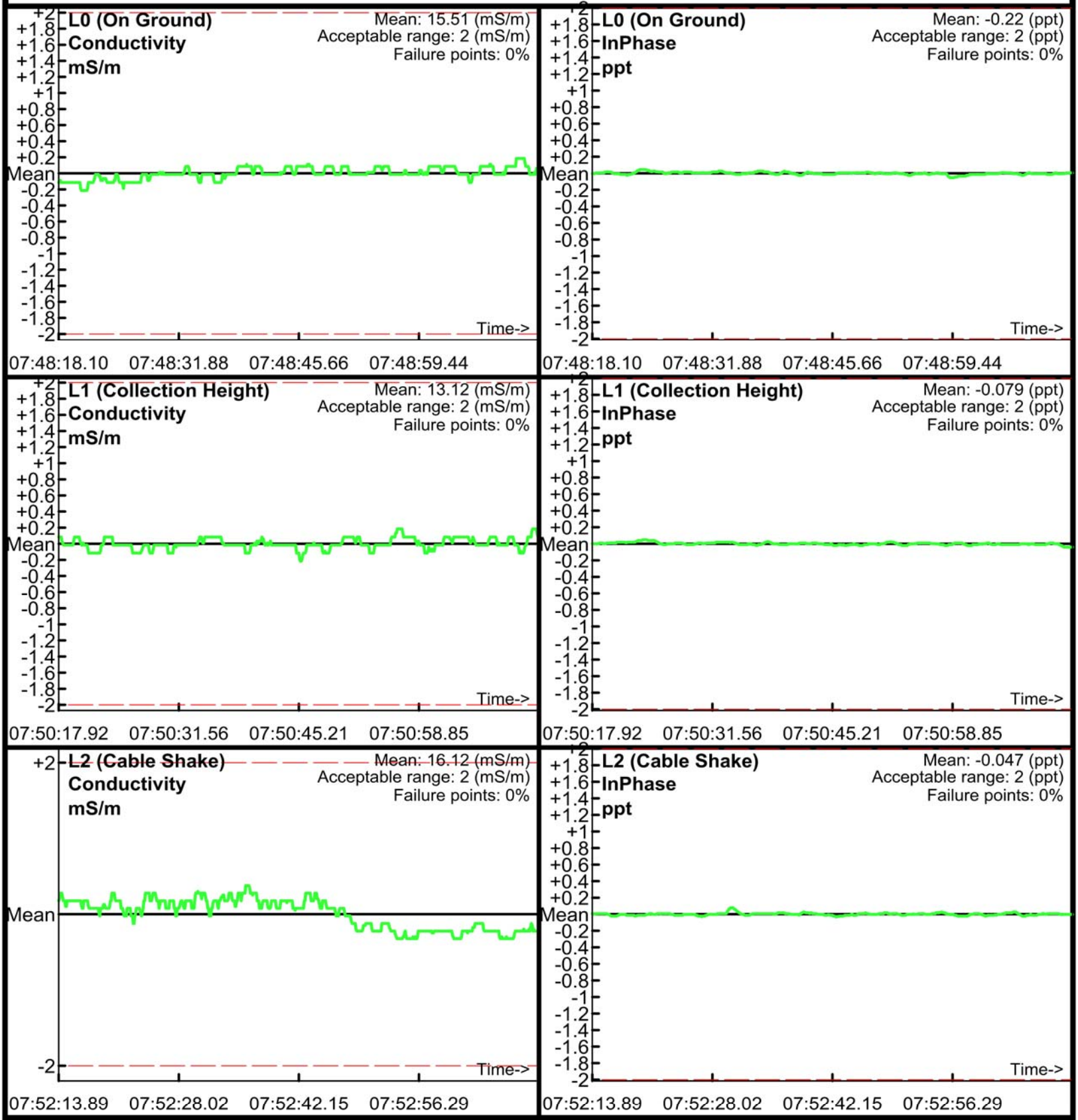

Database: q:\virginia office\ch2m hill\hertford, nc\Data\Geosoft\QC\0530QC1\0530QC1.gdb
Line Name: L0 L1 L2

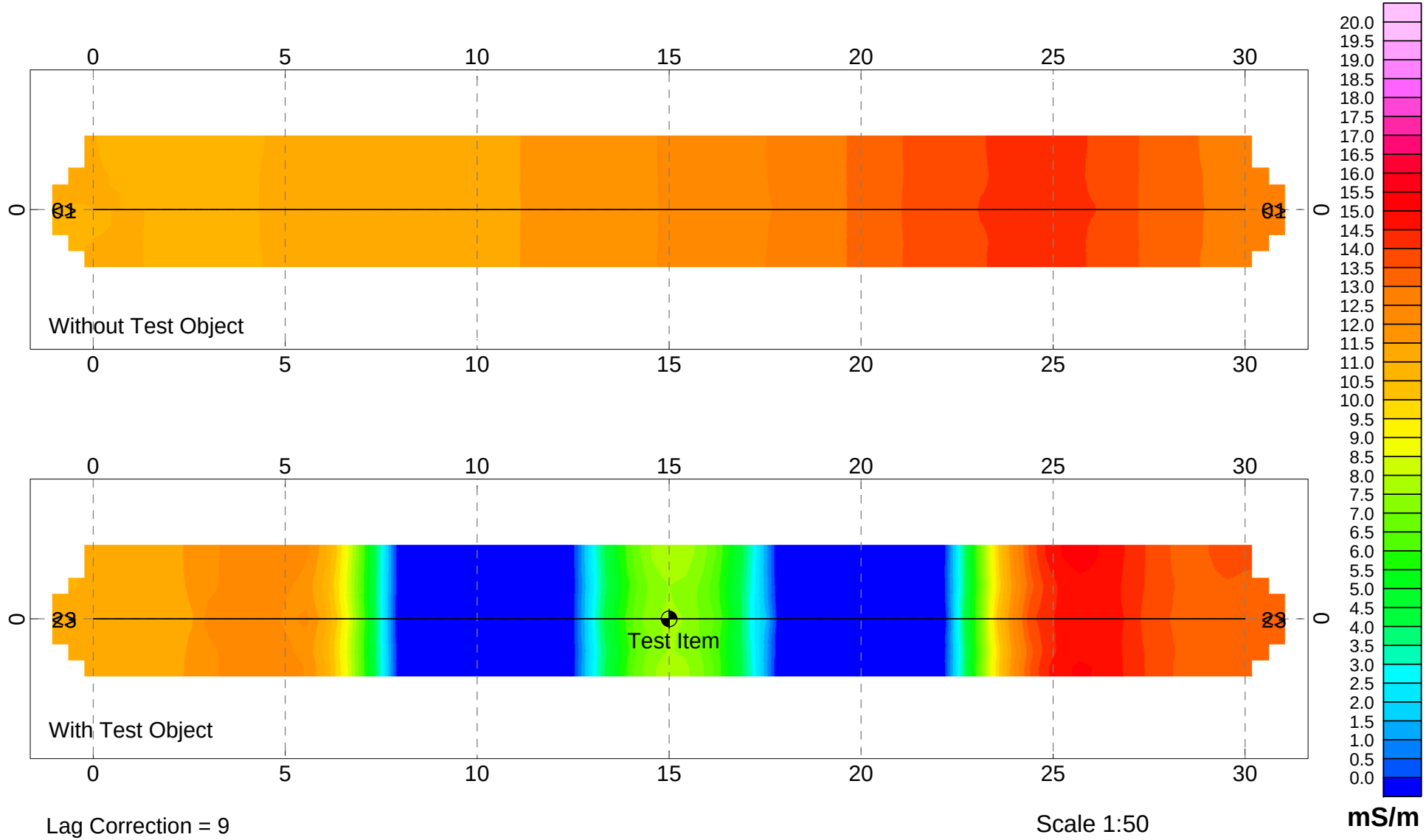

Lag Correction = 9

Scale 1:50

2.5 0 2.5 5

(feet)

NAeVA GEOPHYSICS INC.

THE LEADER IN SUBSURFACE DETECTION

Subsurface Geophysical Surveys

CH2M HILL

EM31 Conductivity Latency Test - 0530LT2
Towers Road Disposal Area
Hertford, North Carolina

Date of Survey: 05/30/2013

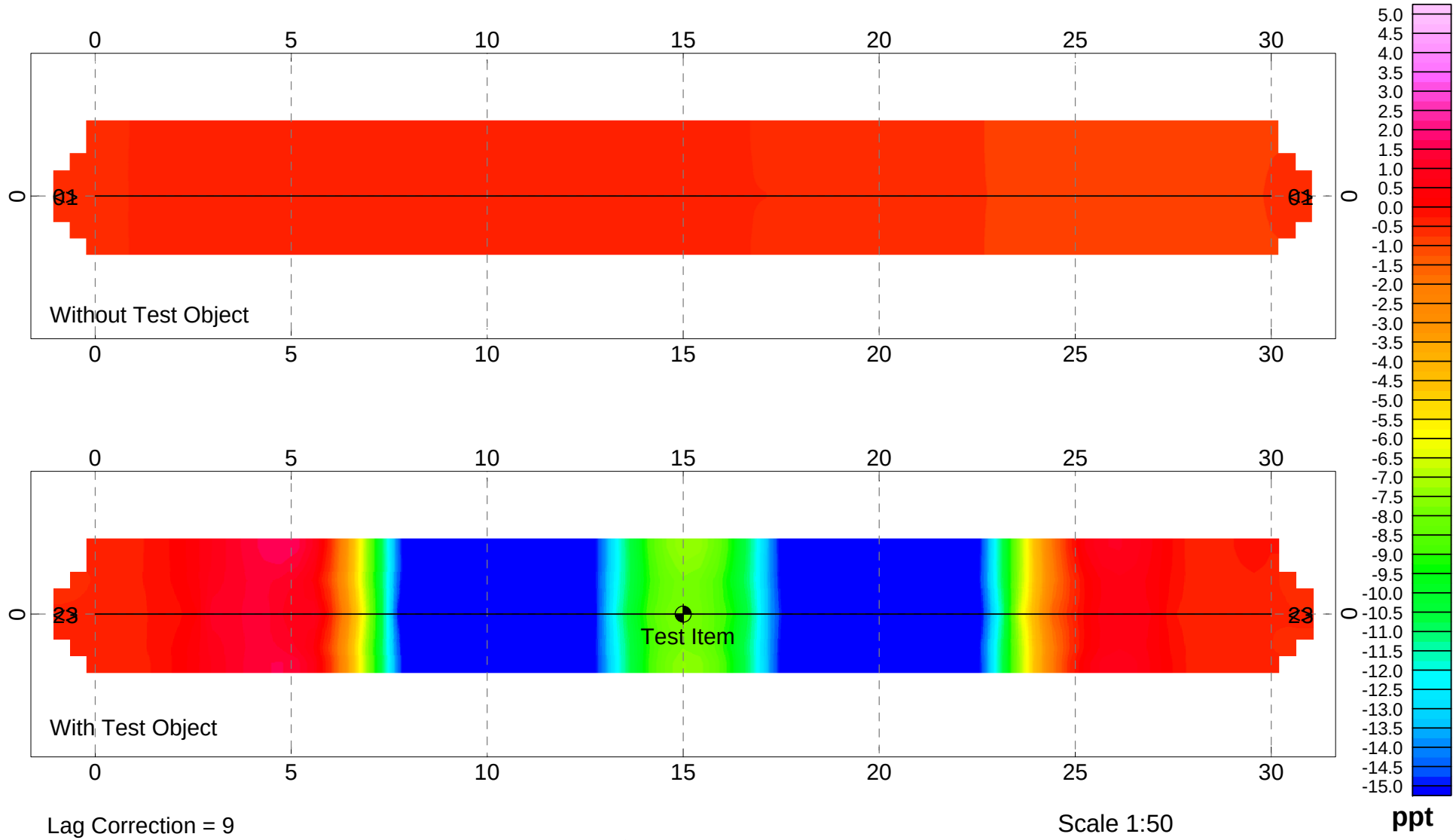

Lag Correction = 9

Scale 1:50

2.5 0 2.5 5

(feet)

NAeVA GEOPHYSICS INC.

THE LEADER IN SUBSURFACE DETECTION

Subsurface Geophysical Surveys

CH2M HILL

EM31 Inphase Latency Test - 0530LT2
Towers Road Disposal Area
Hertford, North Carolina

Date of Survey: 05/30/2013

Appendix B

EM31-MK2 Final Site Mosaics

NAeVA GEOPHYSICS INC.
THE LEADER IN SUBSURFACE DETECTION
Subsurface Geophysical Surveys

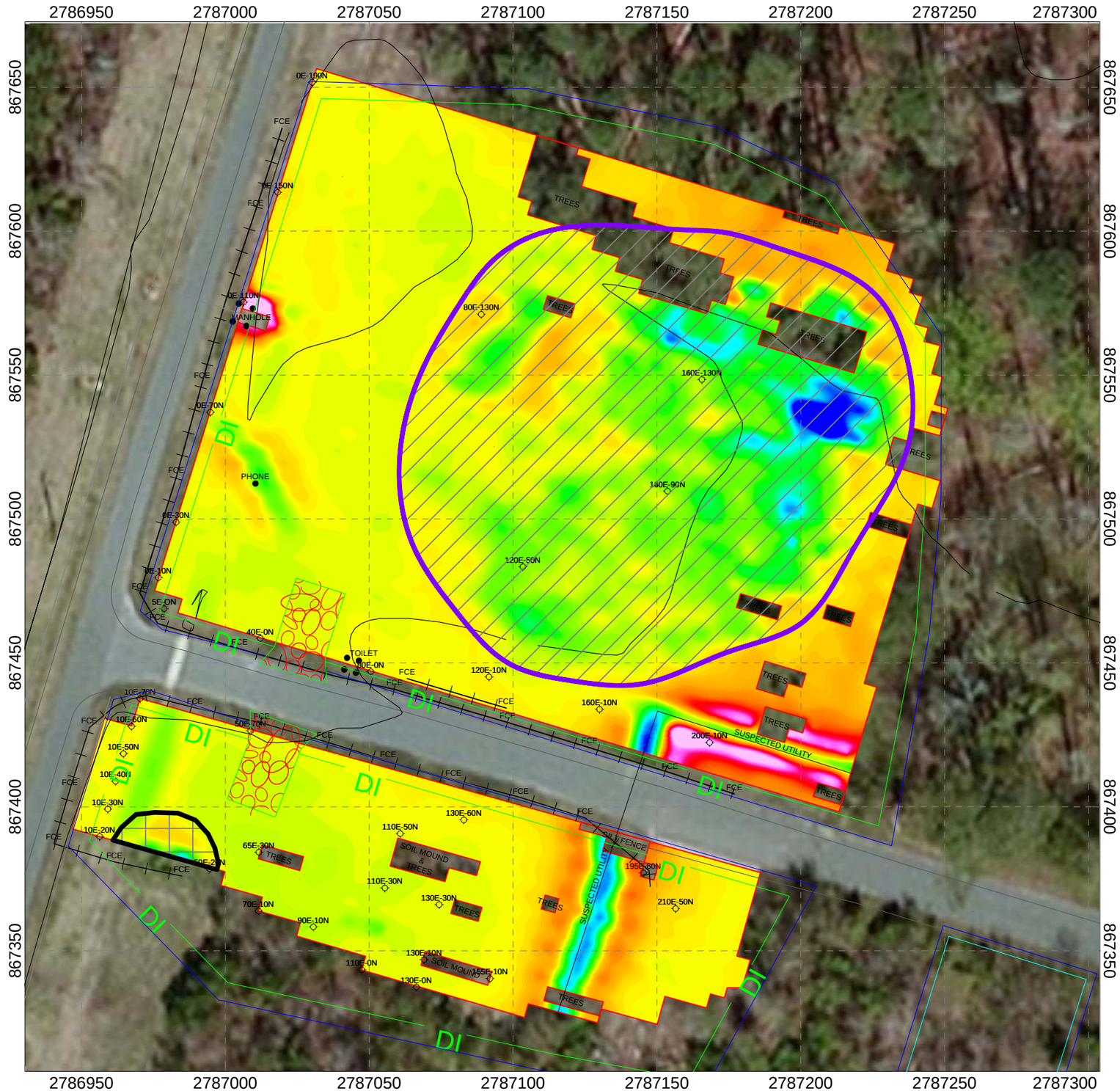

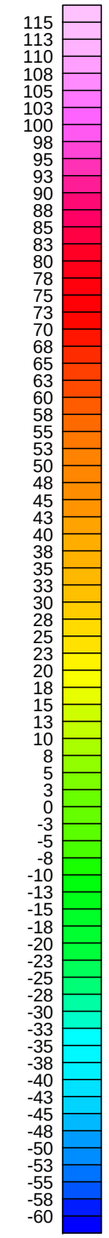

Legend

- Area of Investigation
- Culture
- Stake
- Potential Waste/Debris Area (from EM31 Inphase data)
- Anomalous Area

Scale 1:500

25 0 25 50 75 100

US survey foot

NAD83 / North Carolina (ftUS)

Figure 1

Client: CH2M HILL

EM31 Conductivity
2nd St North Towers Road Disposal Area
Hertford, North Carolina

Date of Survey: 05/30/2013 - 05/31/2013

NAeVA GEOPHYSICS INC.
THE LEADER IN SUBSURFACE DETECTION
Subsurface Geophysical Surveys

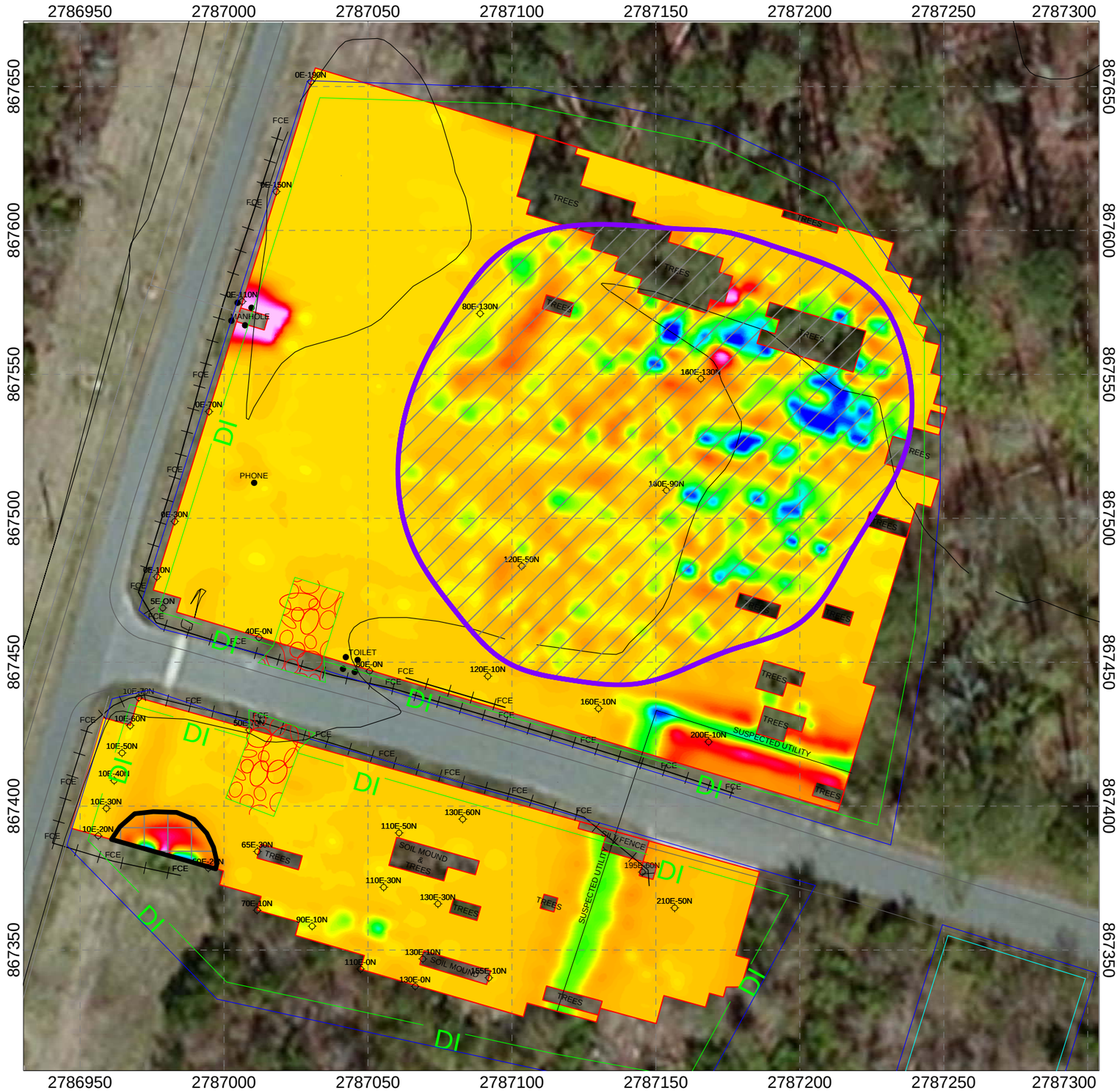

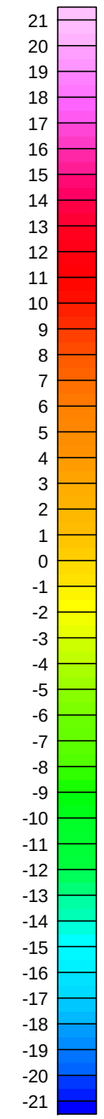

Legend

- Area of Investigation
- Culture
- Stake
- Potential Waste/Debris Area
- Anomalous Area

Scale 1:500

25 0 25 50 75 100

US survey foot

NAD83 / North Carolina (ftUS)

Figure 2

Client: CH2M HILL

EM31 Inphase
2nd St North Towers Road Disposal Area
Hertford, North Carolina

Date of Survey: 05/30/2013 - 05/31/2013

NAeVA GEOPHYSICS INC.
THE LEADER IN SUBSURFACE DETECTION
Subsurface Geophysical Surveys

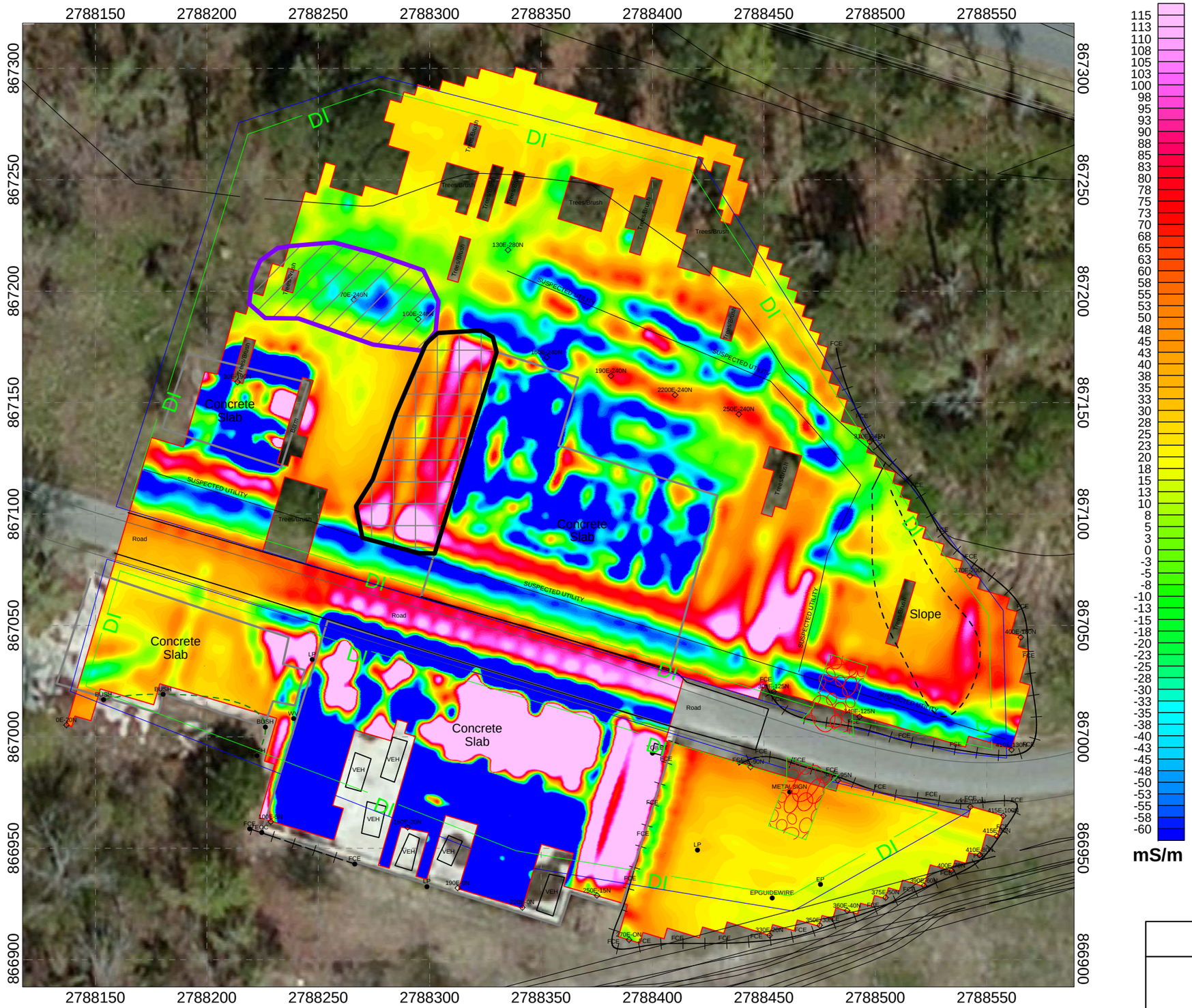

Legend

- Area of Investigation
- Culture
- Stake
- Potential Waste/Debris Area (from EM31 Inphase data)
- Anomalous Area

Scale 1:600

25 0 25 50 75 100 125

US survey foot

NAD83 / North Carolina (ftUS)

Figure 3

Client: CH2M HILL

EM31 Conductivity
5th St Towers Road Disposal Area
Hertford, North Carolina

Date of Survey: 05/29/2013 - 05/31/2013

NAeVA GEOPHYSICS INC.
THE LEADER IN SUBSURFACE DETECTION
Subsurface Geophysical Surveys

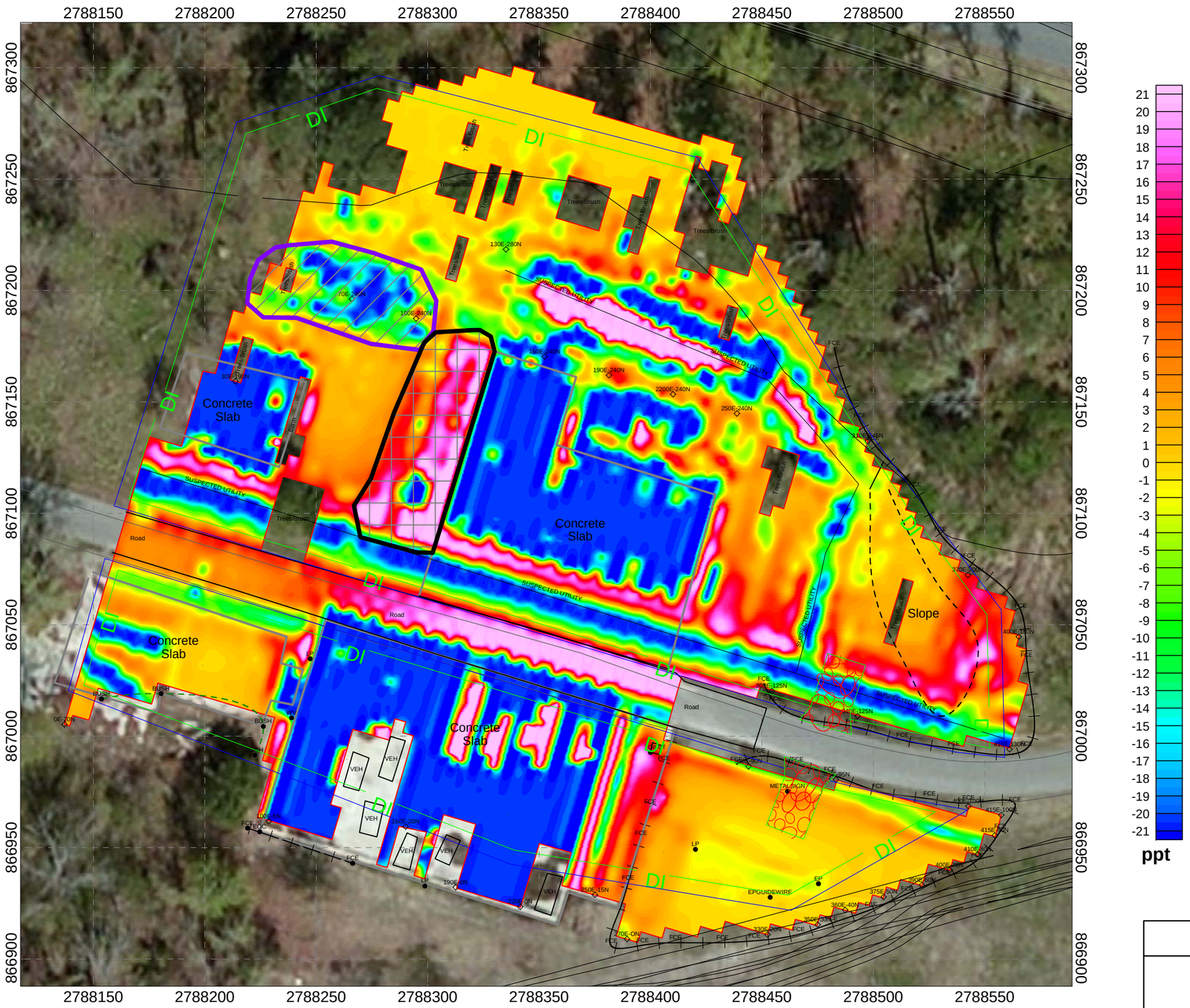

21
20
19
18
17
16
15
14
13
12
11
10
9
8
7
6
5
4
3
2
1
0
-1
-2
-3
-4
-5
-6
-7
-8
-9
-10
-11
-12
-13
-14
-15
-16
-17
-18
-19
-20
-21
ppt

Legend

- Area of Investigation
- Culture
- Stake
- Potential Waste/Debris Area
- Anomalous Area

Scale 1:600

25 0 25 50 75 100 125

US survey foot

NAD83 / North Carolina (ftUS)

Figure 4

Client: CH2M HILL

EM31 Inphase
5th St Towers Road Disposal Area
Hertford, North Carolina

Date of Survey: 05/29/2013 - 05/31/2013

Attachment C
Well Completion Diagrams and Soil Boring Logs

NON RESIDENTIAL WELL CONSTRUCTION RECORD

North Carolina Department of Environment and Natural Resources- Division of Water Quality

WELL CONTRACTOR CERTIFICATION # 3544

1. WELL CONTRACTOR:

Joshua Ellingworth
Well Contractor (Individual) Name

Parratt-Wolff, Inc.
Well Contractor Company Name

501 Millstone Drive
Street Address

Hillsborough NC 27278
City or Town State Zip Code

(919) 644-2814
Area code Phone number

2. WELL INFORMATION:

WELL CONSTRUCTION PERMIT#

OTHER ASSOCIATED PERMIT#(if applicable)

SITE WELL ID #(if applicable) HPDTA-BG-MW01

3. WELL USE (Check One Box) Monitoring ☑ Municipal/Public ☐ Industrial/Commercial ☐ Agricultural ☐ Recovery ☐ Injection ☐ Irrigation ☐ Other ☐ (list use)

DATE DRILLED 6/11-6/12/13

4. WELL LOCATION:

Towers Road
(Street Name, Numbers, Community, Subdivision, Lot No., Parcel, Zip Code)

CITY: Hertford COUNTY Perquimans

TOPOGRAPHIC / LAND SETTING: (check appropriate box)
☐Slope ☐Valley ☑Flat ☐Ridge ☐Other

LATITUDE 36 ° ' " DMS OR 36.10284454 DD

LONGITUDE 76 ° ' " DMS OR 76.33115172 DD

Latitude/longitude source: ☐GPS ☑Topographic map
(location of well must be shown on a USGS topo map andattached to this form if not using GPS)

5. FACILITY (Name of the business where the well is located.)

Harvey Point Defense Testin
Facility Name Facility ID# (if applicable)

2835 Harvey Point Road
Street Address

Hertford NC 27944
City or Town State Zip Code

Contact Name

Mailing Address

City or Town State Zip Code

( )
Area code Phone number

6. WELL DETAILS:

a. TOTAL DEPTH: 27.0'

b. DOES WELL REPLACE EXISTING WELL? YES ☐ NO ☑

c. WATER LEVEL Below Top of Casing: 0 FT.
(Use "+" if Above Top of Casing)

d. TOP OF CASING IS 2.0 FT. Above Land Surface*
*Top of casing terminated at/or below land surface may require a variance in accordance with 15A NCAC 2C .0118.

e. YIELD (gpm): N/A METHOD OF TEST N/A

f. DISINFECTION: Type N/A Amount N/A

g. WATER ZONES (depth):

Top N/A	Bottom	Top	Bottom
Top	Bottom	Top	Bottom
Top	Bottom	Top	Bottom

7. CASING:

Depth		Diameter	Thickness/ Weight	Material
Top 0	Bottom 7.0 Ft.	2"	Sch40	PVC
Top	Bottom Ft.			
Top	Bottom Ft.			

8. GROUT:

Depth		Material	Method
Top 0	Bottom 3.0 Ft.	Portland	Tremie
Top 3.0	Bottom 5.0 Ft.	Bentonite	Tremie
Top	Bottom Ft.		

9. SCREEN:

Depth		Diameter	Slot Size	Material
Top 7.0	Bottom 27.0 Ft.	2 in.	.010 in.	PVC
Top	Bottom Ft.	in.	in.	
Top	Bottom Ft.	in.	in.	

10. SAND/GRAVEL PACK:

Depth		Size	Material
Top 5.0	Bottom 27.0 Ft.	#1	Sand
Top	Bottom Ft.		
Top	Bottom Ft.		

11. DRILLING LOG

Top	Bottom	Formation Description
0	4.0'	Brown, moist, silty, fine/medium SAND
4.0	8.0	Brown/tan, moist CLAY; little fine/medium sand
8.0	12.0	Green/gray, wet, silty, fine/ medium SAND

12. REMARKS:

I DO HEREBY CERTIFY THAT THIS WELL WAS CONSTRUCTED IN ACCORDANCE WITH 15A NCAC 2C, WELL CONSTRUCTION STANDARDS, AND THAT A COPY OF THIS RECORD HAS BEEN PROVIDED TO THE WELL OWNER.

SIGNATURE OF CERTIFIED WELL CONTRACTOR DATE 7/13/13

Joshua Ellingworth
PRINTED NAME OF PERSON CONSTRUCTING THE WELL

Submit within 30 days of completion to: Division of Water Quality - Information Processing, 1617 Mail Service Center, Raleigh, NC 27699-161, Phone : (919) 807-6300

Form GW-1b
Rev. 2/09

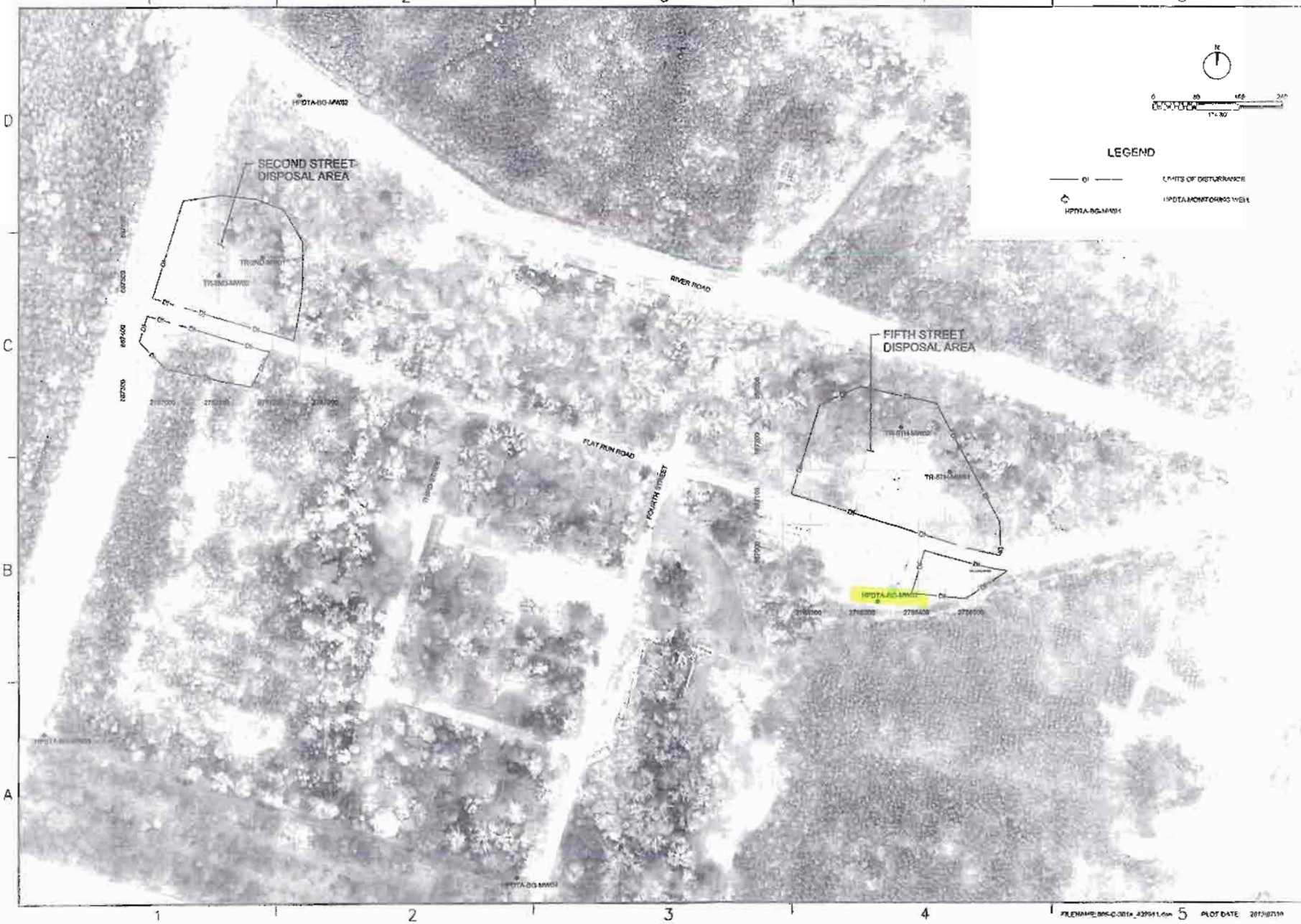
SECOND STREET
DISPOSAL AREA
FIFTH STREET
DISPOSAL AREA
RIVER ROAD
FLAT RUN ROAD
THIRD STREET
FOURTH STREET
LEGEND
LIMITS OF DISTURBANCE
HPDTA MONITORING WELL
N
0 80 160 240
1" = 80'
NAVFAC
CH2MHILL
WELL LOCATIONS
FIGURE - 1

NON RESIDENTIAL WELL CONSTRUCTION RECORD

North Carolina Department of Environment and Natural Resources- Division of Water Quality

WELL CONTRACTOR CERTIFICATION # 3544

1. WELL CONTRACTOR:

Joshua Ellingworth
Well Contractor (Individual) Name

Parratt-Wolff, Inc.
Well Contractor Company Name

501 Millstone Drive
Street Address

Hillsborough NC 27278
City or Town State Zip Code

(919) 644-2814
Area code Phone number

2. WELL INFORMATION:

WELL CONSTRUCTION PERMIT#

OTHER ASSOCIATED PERMIT#(if applicable)

SITE WELL ID #(if applicable) HPDTA-BG-MW02

3. WELL USE (Check One Box) Monitoring ☑ Municipal/Public ☐
Industrial/Commercial ☐ Agricultural ☐ Recovery ☐ Injection ☐
Irrigation ☐ Other ☐ (list use)

DATE DRILLED 6/13/13

4. WELL LOCATION:

Towers Road
(Street Name, Numbers, Community, Subdivision, Lot No., Parcel, Zip Code)

CITY: Hertford COUNTY Perquimans

TOPOGRAPHIC / LAND SETTING: (check appropriate box)
☐Slope ☐Valley ☑Flat ☐Ridge ☐Other

LATITUDE 36 ° ' " DMS OR 36.10560107 DD

LONGITUDE 76 ° ' " DMS OR 76.33518576 DD

Latitude/longitude source: ☐GPS ☑Topographic map
(location of well must be shown on a USGS topo map andattached to this form if not using GPS)

5. FACILITY (Name of the business where the well is located.)

Harvey Point Defense Testi
Facility Name Facility ID# (if applicable)

2835 Harvey Point Road
Street Address

Hertford NC 27944
City or Town State Zip Code

Contact Name

Mailing Address

City or Town State Zip Code

( )
Area code Phone number

6. WELL DETAILS:

a. **TOTAL DEPTH:** 27.0'

b. **DOES WELL REPLACE EXISTING WELL?** YES ☐ NO ☑

c. **WATER LEVEL** Below Top of Casing: 6.0 FT.
(Use "+" if Above Top of Casing)

d. **TOP OF CASING IS** 2.0 FT. Above Land Surface*
*Top of casing terminated at/or below land surface may require a variance in accordance with 15A NCAC 2C .0118.

e. **YIELD (gpm):** N/A **METHOD OF TEST** N/A

f. **DISINFECTION: Type** N/A **Amount** N/A

g. **WATER ZONES** (depth):

Top N/A	Bottom	Top	Bottom
Top	Bottom	Top	Bottom
Top	Bottom	Top	Bottom

7. CASING:

Depth		Diameter	Thickness/ Weight	Material
Top 0	Bottom 7.0	Ft. 2"	Sch40	PVC
Top	Bottom	Ft.		
Top	Bottom	Ft.		

8. GROUT:

Depth		Material	Method
Top 0	Bottom 3.0	Ft. Portland	Tremie
Top 3.0	Bottom 5.0	Ft. Bentonite	Tremie
Top	Bottom	Ft.	

9. SCREEN:

Depth		Diameter	Slot Size	Material
Top 7.0	Bottom 27.0	Ft. 2 in.	.010 in.	PVC
Top	Bottom	Ft. in.	in.	
Top	Bottom	Ft. in.	in.	

10. SAND/GRAVEL PACK:

Depth		Size	Material
Top 5.0	Bottom 27.0	Ft. #1	Sand
Top	Bottom	Ft.	
Top	Bottom	Ft.	

11. DRILLING LOG

Top	Bottom	Formation Description
0	4.0'	Brown, moist, silty, fine/medium SAND
8.0	12.0	Green/gray, wet, silty, fine/ medium SAND
12.0	16.0	Brown/tan, wet, silty fine/medium SAND

12. REMARKS:

I DO HEREBY CERTIFY THAT THIS WELL WAS CONSTRUCTED IN ACCORDANCE WITH 15A NCAC 2C, WELL CONSTRUCTION STANDARDS, AND THAT A COPY OF THIS RECORD HAS BEEN PROVIDED TO THE WELL OWNER.

SIGNATURE OF CERTIFIED WELL CONTRACTOR 7/13/13 DATE

Joshua Ellingworth
PRINTED NAME OF PERSON CONSTRUCTING THE WELL

Submit within 30 days of completion to: Division of Water Quality - Information Processing, 1617 Mail Service Center, Raleigh, NC 27699-161, Phone : (919) 807-6300

Form GW-1b
Rev. 2/09

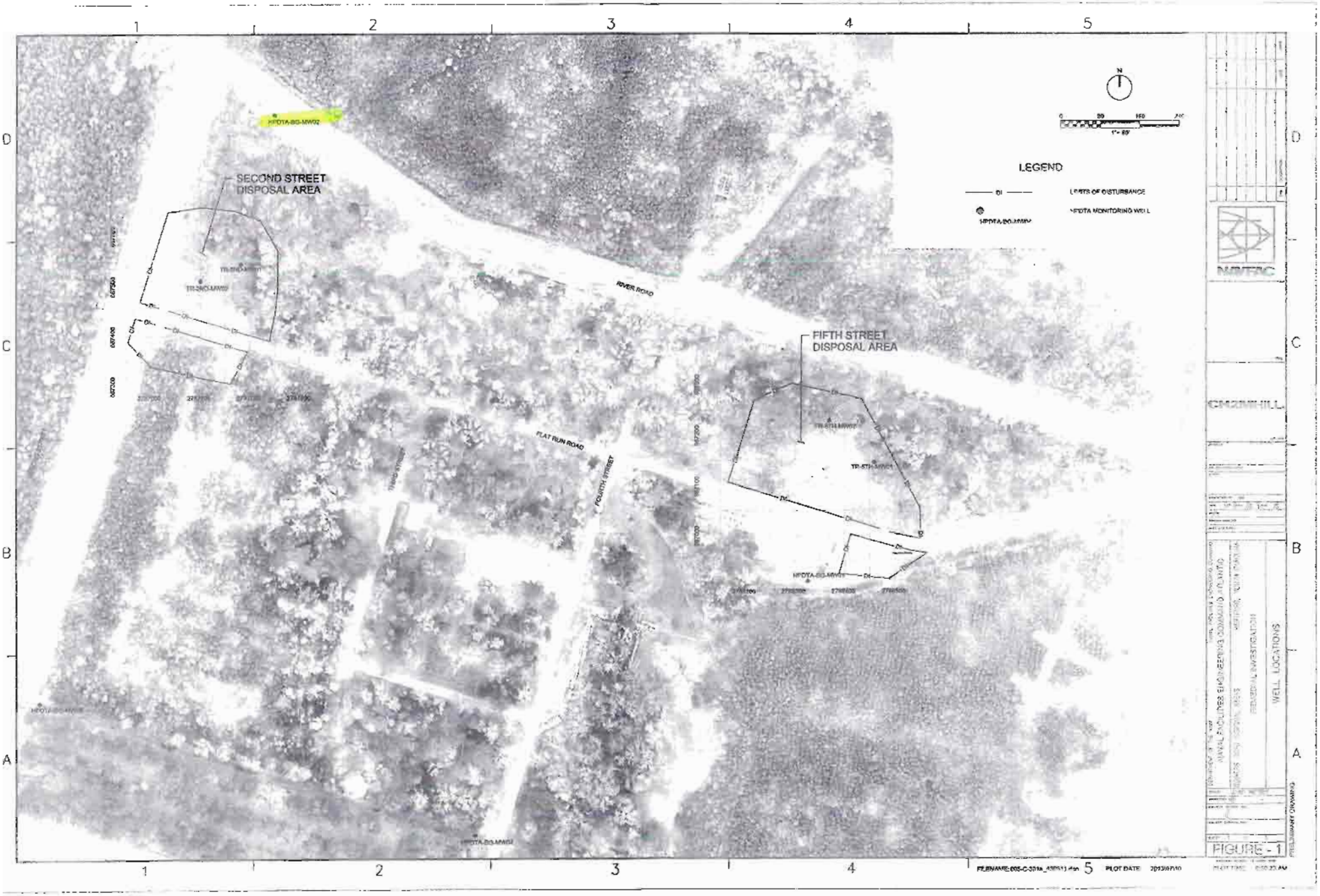
SECOND STREET
DISPOSAL AREA
FIFTH STREET
DISPOSAL AREA
RIVER ROAD
FLAT RUN ROAD
THIRD STREET
FOURTH STREET
HPDTA-BG-MW02
LEGEND
LIMITS OF DISTURBANCE
HPDTA MONITORING WELL
NUTERC
CH2MHILL
WELL LOCATIONS
FIGURE - 1

NON RESIDENTIAL WELL CONSTRUCTION RECORD

North Carolina Department of Environment and Natural Resources- Division of Water Quality

WELL CONTRACTOR CERTIFICATION # 3544

1. WELL CONTRACTOR:

Joshua Ellingworth
Well Contractor (Individual) Name

Parratt-Wolff, Inc.
Well Contractor Company Name

501 Millstone Drive
Street Address

Hillsborough NC 27278
City or Town State Zip Code

(919) 644-2814
Area code Phone number

2. WELL INFORMATION:

WELL CONSTRUCTION PERMIT#

OTHER ASSOCIATED PERMIT#(if applicable)

SITE WELL ID #(if applicable) HPDTA-BG-MW03

3. WELL USE (Check One Box) Monitoring ☑ Municipal/Public ☐
Industrial/Commercial ☐ Agricultural ☐ Recovery ☐ Injection ☐
Irrigation ☐ Other ☐ (list use)

DATE DRILLED 6/14/13

4. WELL LOCATION:

Towers Road
(Street Name, Numbers, Community, Subdivision, Lot No., Parcel, Zip Code)

CITY: Hertford COUNTY Perquimans

TOPOGRAPHIC / LAND SETTING: (check appropriate box)
☐Slope ☐Valley ☑Flat ☐Ridge ☐Other

LATITUDE 36 ° ' " DMS OR 36.10233244 DD

LONGITUDE 76 ° ' " DMS OR 76.33643031 DD

Latitude/longitude source: ☐GPS ☑Topographic map
(location of well must be shown on a USGS topo map andattached to this form if not using GPS)

5. FACILITY (Name of the business where the well is located.)

Harvey Point Defense Testi
Facility Name Facility ID# (if applicable)

2835 Harvey Point Road
Street Address

Hertford NC 27944
City or Town State Zip Code

Contact Name

Mailing Address

City or Town State Zip Code

( )
Area code Phone number

6. WELL DETAILS:

a. TOTAL DEPTH: 27.0'

b. DOES WELL REPLACE EXISTING WELL? YES ☐ NO ☑

c. WATER LEVEL Below Top of Casing: 10.0 FT.
(Use "+" if Above Top of Casing)

d. TOP OF CASING IS 2.0 FT. Above Land Surface*
*Top of casing terminated at/or below land surface may require a variance in accordance with 15A NCAC 2C .0118.

e. YIELD (gpm): N/A METHOD OF TEST N/A

f. DISINFECTION: Type N/A Amount N/A

g. WATER ZONES (depth):

Top N/A	Bottom	Top	Bottom
Top	Bottom	Top	Bottom
Top	Bottom	Top	Bottom

7. CASING:

Depth		Diameter	Thickness/ Weight	Material
Top 0	Bottom 7.0 Ft.	2"	Sch40	PVC
Top	Bottom Ft.			
Top	Bottom Ft.			

8. GROUT:

Depth		Material	Method
Top 0	Bottom 3.0 Ft.	Portland	Tremie
Top 3.0	Bottom 5.0 Ft.	Bentonite	Tremie
Top	Bottom Ft.		

9. SCREEN:

Depth		Diameter	Slot Size	Material
Top 7.0	Bottom 27.0 Ft.	2 in.	.010 in.	PVC
Top	Bottom Ft.	in.	in.	
Top	Bottom Ft.	in.	in.	

10. SAND/GRAVEL PACK:

Depth		Size	Material
Top 5.0	Bottom 27.0 Ft.	#1	Sand
Top	Bottom Ft.		
Top	Bottom Ft.		

11. DRILLING LOG

Top	Bottom	Formation Description
		No samples taken

12. REMARKS:

I DO HEREBY CERTIFY THAT THIS WELL WAS CONSTRUCTED IN ACCORDANCE WITH 15A NCAC 2C, WELL CONSTRUCTION STANDARDS, AND THAT A COPY OF THIS RECORD HAS BEEN PROVIDED TO THE WELL OWNER.

SIGNATURE OF CERTIFIED WELL CONTRACTOR DATE 7/13/13

Joshua Ellingworth
PRINTED NAME OF PERSON CONSTRUCTING THE WELL

Submit within 30 days of completion to: Division of Water Quality - Information Processing, 1617 Mail Service Center, Raleigh, NC 27699-161, Phone : (919) 807-6300

Form GW-1b
Rev. 2/09

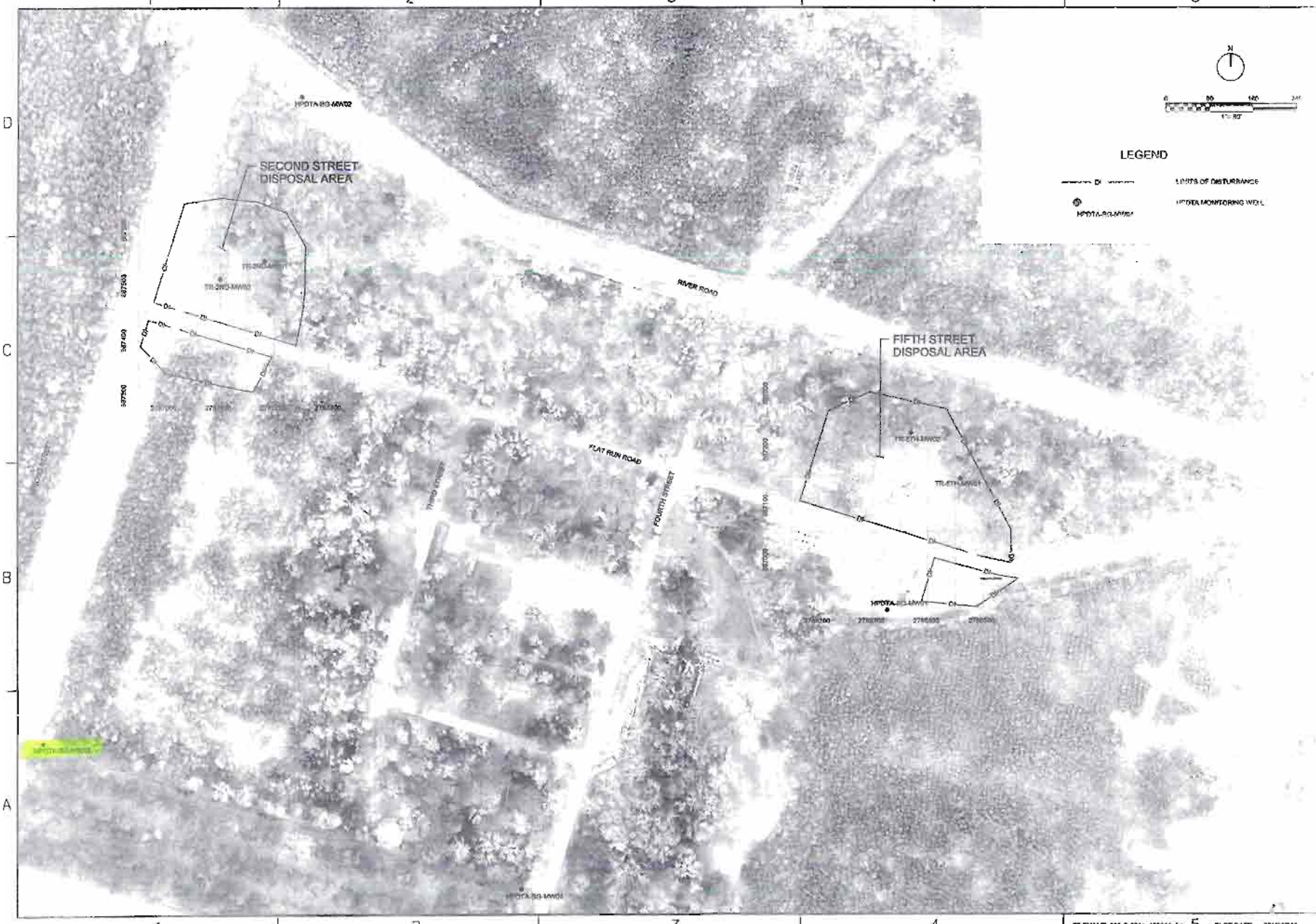
SECOND STREET DISPOSAL AREA
FIFTH STREET DISPOSAL AREA
RIVER ROAD
FLAT RUN ROAD
THIRD STREET
FOURTH STREET
LEGEND
LIMITS OF DISTURBANCE
HPDTA MONITORING WELL
NAVFAC
CH2MHILL
FIGURE - 1

NON RESIDENTIAL WELL CONSTRUCTION RECORD

North Carolina Department of Environment and Natural Resources- Division of Water Quality

WELL CONTRACTOR CERTIFICATION # 3544

1. WELL CONTRACTOR:

Joshua Ellingworth
Well Contractor (Individual) Name

Parratt-Wolff, Inc.
Well Contractor Company Name

501 Millstone Drive
Street Address

Hillsborough NC 27278
City or Town State Zip Code

(919) 644-2814
Area code Phone number

2. WELL INFORMATION:

WELL CONSTRUCTION PERMIT#

OTHER ASSOCIATED PERMIT#(if applicable)

SITE WELL ID #(if applicable) HPDTA-BG-MW04

3. WELL USE (Check One Box) Monitoring ☑ Municipal/Public ☐
Industrial/Commercial ☐ Agricultural ☐ Recovery ☐ Injection ☐
Irrigation☐ Other ☐ (list use)

DATE DRILLED 6/14/13

4. WELL LOCATION:

Towers Road
(Street Name, Numbers, Community, Subdivision, Lot No., Parcel, Zip Code)

CITY: Hertford COUNTY Perquimans

TOPOGRAPHIC / LAND SETTING: (check appropriate box)
☐Slope ☐Valley ☑Flat ☐Ridge ☐Other

LATITUDE 36 ° ' " DMS OR 36.10154426 DD

LONGITUDE 76 ° ' " DMS OR 76.33344769 DD

Latitude/longitude source: ☐GPS ☑Topographic map
(location of well must be shown on a USGS topo map andattached to this form if not using GPS)

5. FACILITY (Name of the business where the well is located.)

Harvey Point Defense Testi
Facility Name Facility ID# (if applicable)

2835 Harvey Point Road
Street Address

Hertford NC 27944
City or Town State Zip Code

Contact Name

Mailing Address

City or Town State Zip Code

( )
Area code Phone number

6. WELL DETAILS:

a. TOTAL DEPTH: 27.0'

b. DOES WELL REPLACE EXISTING WELL? YES ☐ NO ☑

c. WATER LEVEL Below Top of Casing: 10.0 FT.
(Use "+" if Above Top of Casing)

d. TOP OF CASING IS 2.0 FT. Above Land Surface*
*Top of casing terminated at/or below land surface may require a variance in accordance with 15A NCAC 2C .0118.

e. YIELD (gpm): N/A METHOD OF TEST N/A

f. DISINFECTION: Type N/A Amount N/A

g. WATER ZONES (depth):

Top N/A	Bottom	Top	Bottom
Top	Bottom	Top	Bottom
Top	Bottom	Top	Bottom

7. CASING:

Depth		Diameter	Thickness/ Weight	Material
Top 0	Bottom 7.0	Ft. 2"	Sch40	PVC
Top	Bottom	Ft.		
Top	Bottom	Ft.		

8. GROUT:

Depth		Material	Method
Top 0	Bottom 3.0	Ft. Portland	Tremie
Top 3.0	Bottom 5.0	Ft. Bentonite	Tremie
Top	Bottom	Ft.	

9. SCREEN:

Depth		Diameter	Slot Size	Material
Top 7.0	Bottom 27.0	Ft. 2 in.	.010 in.	PVC
Top	Bottom	Ft. in.	in.	
Top	Bottom	Ft. in.	in.	

10. SAND/GRAVEL PACK:

Depth		Size	Material
Top 5.0	Bottom 27.0	Ft. #1	Sand
Top	Bottom	Ft.	
Top	Bottom	Ft.	

11. DRILLING LOG

Top	Bottom	Formation Description
		No samples taken

12. REMARKS:

I DO HEREBY CERTIFY THAT THIS WELL WAS CONSTRUCTED IN ACCORDANCE WITH 15A NCAC 2C, WELL CONSTRUCTION STANDARDS, AND THAT A COPY OF THIS RECORD HAS BEEN PROVIDED TO THE WELL OWNER.

SIGNATURE OF CERTIFIED WELL CONTRACTOR 7/13/13 DATE

Joshua Ellingworth
PRINTED NAME OF PERSON CONSTRUCTING THE WELL

Submit within 30 days of completion to: Division of Water Quality - Information Processing, 1617 Mail Service Center, Raleigh, NC 27699-161, Phone : (919) 807-6300

Form GW-1b
Rev. 2/09

NAVFAC

CH2MHILL

NAVAL ENERGY AND ENVIRONMENTAL SUPPORT ACTIVITY
PORTSMOUTH, VIRGINIA

REMEDIAL INVESTIGATION

WELL LOCATIONS

FIGURE - 1

FIELD WORK DRAWING

FILENAME: 595-C-301A_436511.dgn PLOT DATE: 2013/07/18

NON RESIDENTIAL WELL CONSTRUCTION RECORD

North Carolina Department of Environment and Natural Resources- Division of Water Quality

WELL CONTRACTOR CERTIFICATION # 3544

1. WELL CONTRACTOR:

Joshua Ellingworth
Well Contractor (Individual) Name

Parratt-Wolff, Inc.
Well Contractor Company Name

501 Millstone Drive
Street Address

Hillsborough NC 27278
City or Town State Zip Code

(919) 644-2814
Area code Phone number

2. WELL INFORMATION:

WELL CONSTRUCTION PERMIT#

OTHER ASSOCIATED PERMIT#(if applicable)

SITE WELL ID #(if applicable) TR-2ND-MW01

3. WELL USE (Check One Box) Monitoring ☑ Municipal/Public ☐
Industrial/Commercial ☐ Agricultural ☐ Recovery ☐ Injection ☐
Irrigation ☐ Other ☐ (list use)

DATE DRILLED 6/10-6/11/13

4. WELL LOCATION:

2nd Street
(Street Name, Numbers, Community, Subdivision, Lot No., Parcel, Zip Code)

CITY: Hertford COUNTY Perquimans

TOPOGRAPHIC / LAND SETTING: (check appropriate box)
☐Slope ☐Valley ☑Flat ☐Ridge ☐Other

LATITUDE 36 ° ' " DMS OR 36.10462589 DD

LONGITUDE 76 ° ' " DMS OR 76.33486390 DD

Latitude/longitude source: ☐GPS ☑Topographic map
(location of well must be shown on a USGS topo map andattached to this form if not using GPS)

5. FACILITY (Name of the business where the well is located.)

Harvey Point Defense Testi
Facility Name Facility ID# (if applicable)

2835 Harvey Point Road
Street Address

Hertford NC 27944
City or Town State Zip Code

Contact Name

Mailing Address

City or Town State Zip Code

( )
Area code Phone number

6. WELL DETAILS:

a. TOTAL DEPTH: 27.0'

b. DOES WELL REPLACE EXISTING WELL? YES ☐ NO ☑

c. WATER LEVEL Below Top of Casing: 13.0 FT.
(Use "+" if Above Top of Casing)

d. TOP OF CASING IS 2.0 FT. Above Land Surface*
*Top of casing terminated at/or below land surface may require a variance in accordance with 15A NCAC 2C .0118.

e. YIELD (gpm): N/A METHOD OF TEST N/A

f. DISINFECTION: Type N/A Amount N/A

g. WATER ZONES (depth):

Top N/A	Bottom	Top	Bottom
Top	Bottom	Top	Bottom
Top	Bottom	Top	Bottom

7. CASING:

Depth		Diameter	Thickness/ Weight	Material
Top 0	Bottom 7.0 Ft.	2"	Sch40	PVC
Top	Bottom Ft.			
Top	Bottom Ft.			

8. GROUT:

Depth		Material	Method
Top 0	Bottom 3.0 Ft.	Portland	Tremie
Top 3.0	Bottom 5.0 Ft.	Bentonite	Tremie
Top	Bottom Ft.		

9. SCREEN:

Depth		Diameter	Slot Size	Material
Top 7.0	Bottom 27.0 Ft.	2 in.	.010 in.	PVC
Top	Bottom Ft.	in.	in.	
Top	Bottom Ft.	in.	in.	

10. SAND/GRAVEL PACK:

Depth		Size	Material
Top 5.0	Bottom 27.0 Ft.	#1	Sand
Top	Bottom Ft.		
Top	Bottom Ft.		

11. DRILLING LOG

Top	Bottom	Formation Description
0	4.0'	Brown/tan, moist, silty SAND & CLAY
4.0	8.0	Green/tan, moist CLAY; some sand
8.0	12.0	Green, wet CLAY; some sand
12.0	16.0	Brown/tan, moist, sandy CLAY
16.0	20.0	Brown/tan, wet, fine/medium, silty SAND
28.0	32.0	Blue/gray, moist CLAY; some silt
32.0	36.0	Brown/tan, wet, fine/medium

12. REMARKS:

~~SAND; trace silt~~

I DO HEREBY CERTIFY THAT THIS WELL WAS CONSTRUCTED IN ACCORDANCE WITH 15A NCAC 2C, WELL CONSTRUCTION STANDARDS, AND THAT A COPY OF THIS RECORD HAS BEEN PROVIDED TO THE WELL OWNER

SIGNATURE OF CERTIFIED WELL CONTRACTOR 7/13/13 DATE

Joshua Ellingworth
PRINTED NAME OF PERSON CONSTRUCTING THE WELL

Submit within 30 days of completion to: Division of Water Quality - Information Processing, 1617 Mail Service Center, Raleigh, NC 27699-161, Phone : (919) 807-6300

Form GW-1b
Rev. 2/09

SECOND STREET DISPOSAL AREA
FIFTH STREET DISPOSAL AREA
RIVER ROAD
FLAT RUN ROAD
FOURTH STREET
HPOTA-BG-MW02
HPOTA-BG-MW04
LEGEND
LIMITS OF DISTURBANCE
HPOTA MONITORING WELL
N
NAVFAC
CH2MHILL
WELL LOCATIONS
FIGURE -

NON RESIDENTIAL WELL CONSTRUCTION RECORD

North Carolina Department of Environment and Natural Resources- Division of Water Quality

WELL CONTRACTOR CERTIFICATION # 3544

1. WELL CONTRACTOR:

Joshua Ellingworth
Well Contractor (Individual) Name

Parratt-Wolff, Inc.
Well Contractor Company Name

501 Millstone Drive
Street Address

Hillsborough NC 27278
City or Town State Zip Code

(919) 644-2814
Area code Phone number

2. WELL INFORMATION:

WELL CONSTRUCTION PERMIT#

OTHER ASSOCIATED PERMIT#(if applicable)

SITE WELL ID #(if applicable) TR-2ND-MW02

3. WELL USE (Check One Box) Monitoring ☑ Municipal/Public ☐
Industrial/Commercial ☐ Agricultural ☐ Recovery ☐ Injection ☐
Irrigation ☐ Other ☐ (list use)

DATE DRILLED 6/11/13

4. WELL LOCATION:

2nd Street
(Street Name, Numbers, Community, Subdivision, Lot No., Parcel, Zip Code)

CITY: Hertford COUNTY Perquimans

TOPOGRAPHIC / LAND SETTING: (check appropriate box)
☐Slope ☐Valley ☑Flat ☐Ridge ☐Other

LATITUDE 36 ° ' " DMS OR 36.10449587 DD

LONGITUDE 76 ° ' " DMS OR 76.33535206 DD

Latitude/longitude source: ☐GPS ☑Topographic map
(location of well must be shown on a USGS topo map andattached to this form if not using GPS)

5. FACILITY (Name of the business where the well is located.)

Harvey Point Defense Testi
Facility Name Facility ID# (if applicable)

2835 Harvey Point Road
Street Address

Hertford NC 27944
City or Town State Zip Code

Contact Name

Mailing Address

City or Town State Zip Code

( )
Area code Phone number

6. WELL DETAILS:

a. TOTAL DEPTH: 27.0'

b. DOES WELL REPLACE EXISTING WELL? YES ☐ NO ☑

c. WATER LEVEL Below Top of Casing: 12.0 FT.
(Use "+" if Above Top of Casing)

d. TOP OF CASING IS 2.0 FT. Above Land Surface*
*Top of casing terminated at/or below land surface may require a variance in accordance with 15A NCAC 2C .0118.

e. YIELD (gpm): N/A METHOD OF TEST N/A

f. DISINFECTION: Type N/A Amount N/A

g. WATER ZONES (depth):
Top N/A Bottom Top Bottom
Top Bottom Top Bottom
Top Bottom Top Bottom

7. CASING:	Depth		Diameter	Thickness/ Weight	Material
Top 0	Bottom 7.0	Ft.	2"	Sch40	PVC
Top	Bottom	Ft.			
Top	Bottom	Ft.			

8. GROUT:	Depth		Material	Method
Top 0	Bottom 3.0	Ft.	Portland	Tremie
Top 3.0	Bottom 5.0	Ft.	Bentonite	Tremie
Top	Bottom	Ft.		

9. SCREEN:	Depth		Diameter	Slot Size	Material
Top 7.0	Bottom 27.0	Ft.	2 in.	.010 in.	PVC
Top	Bottom	Ft.	in.	in.	
Top	Bottom	Ft.	in.	in.	

10. SAND/GRAVEL PACK:	Depth		Size	Material
Top 5.0	Bottom 27.0	Ft.	#1	Sand
Top	Bottom	Ft.		
Top	Bottom	Ft.		

11. DRILLING LOG

Top	Bottom	Formation Description
0	4.0'	Black/brown, moist, silty, fine/
		medium SAND; some gravel
8.0	12.0	Green/gray, moist silty CLAY;
		little fine/medium sand
12.0	16.0	Brown/tan, wet, silty, fine/
		medium SAND

12. REMARKS:

I DO HEREBY CERTIFY THAT THIS WELL WAS CONSTRUCTED IN ACCORDANCE WITH 15A NCAC 2C, WELL CONSTRUCTION STANDARDS, AND THAT A COPY OF THIS RECORD HAS BEEN PROVIDED TO THE WELL OWNER.

SIGNATURE OF CERTIFIED WELL CONTRACTOR DATE 7/13/13

Joshua Ellingworth
PRINTED NAME OF PERSON CONSTRUCTING THE WELL

Submit within 30 days of completion to: Division of Water Quality - Information Processing, 1617 Mail Service Center, Raleigh, NC 27699-161, Phone : (919) 807-6300

Form GW-1b
Rev. 2/09

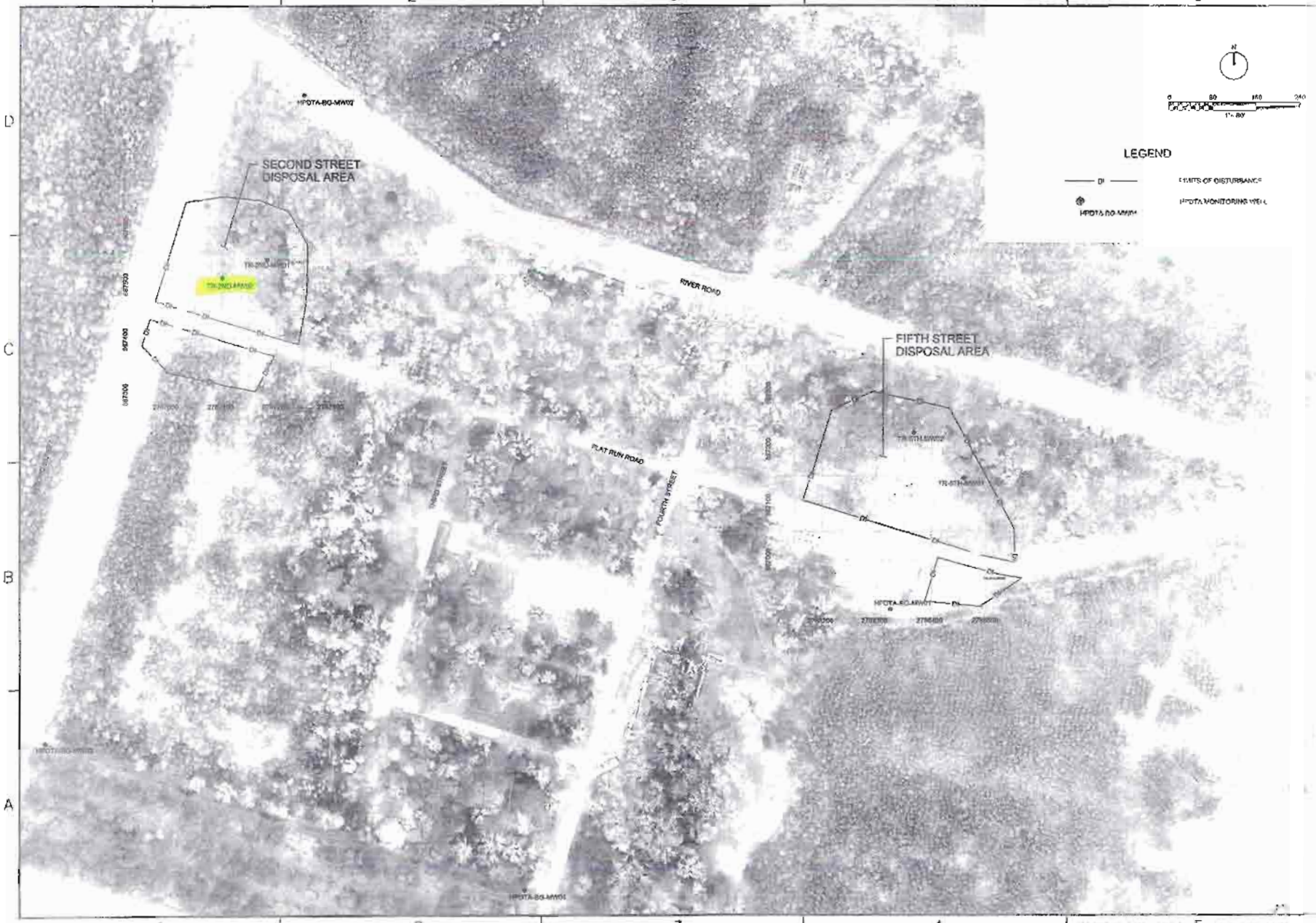
SECOND STREET
DISPOSAL AREA
FIFTH STREET
DISPOSAL AREA
RIVER ROAD
FLAT RUN ROAD
FOURTH STREET
LEGEND
LIMITS OF DISTURBANCE
HPOTA MONITORING WELL
HPOTA-BG-MW02
HPOTA-BG-MW03
HPOTA-BG-MW04
HPOTA-BG-MW01
NAVFAC
CH2MHILL
NAVAL FACILITIES ENGINEERING COMMAND ATLANTIC
WELL LOCATIONS
FIGURE - 1
PRELIMINARY DRAWING

NON RESIDENTIAL WELL CONSTRUCTION RECORD

North Carolina Department of Environment and Natural Resources- Division of Water Quality

WELL CONTRACTOR CERTIFICATION # 3544

1. WELL CONTRACTOR:

Joshua Ellingworth
Well Contractor (Individual) Name

Parratt-Wolff, Inc.
Well Contractor Company Name

501 Millstone Drive
Street Address

Hillsborough NC 27278
City or Town State Zip Code

(919) 644-2814
Area code Phone number

2. WELL INFORMATION:

WELL CONSTRUCTION PERMIT#

OTHER ASSOCIATED PERMIT#(if applicable)

SITE WELL ID #(if applicable) TR-5TH-MW01

3. WELL USE (Check One Box) Monitoring ☑ Municipal/Public ☐
Industrial/Commercial ☐ Agricultural ☐ Recovery ☐ Injection ☐
Irrigation ☐ Other ☐ (list use)

DATE DRILLED 6/12/13

4. WELL LOCATION:

5th Street
(Street Name, Numbers, Community, Subdivision, Lot No., Parcel, Zip Code)

CITY: Hertford COUNTY Perquimans

TOPOGRAPHIC / LAND SETTING: (check appropriate box)
☐Slope ☐Valley ☑Flat ☐Ridge ☐Other

LATITUDE 36 ° ' " DMS OR 36.10343400 DD

LONGITUDE 76 ° ' " DMS OR 76.33073866 DD

Latitude/longitude source: ☐GPS ☑Topographic map
(location of well must be shown on a USGS topo map andattached to this form if not using GPS)

5. FACILITY (Name of the business where the well is located.)

Harvey Point Defense Testi
Facility Name Facility ID# (if applicable)

2835 Harvey Point Road
Street Address

Hertford NC 27944
City or Town State Zip Code

Contact Name

Mailing Address

City or Town State Zip Code

( )
Area code Phone number

6. WELL DETAILS:

a. TOTAL DEPTH: 27.0'

b. DOES WELL REPLACE EXISTING WELL? YES ☐ NO ☑

c. WATER LEVEL Below Top of Casing: 5.0 FT.
(Use "+" if Above Top of Casing)

d. TOP OF CASING IS 2.0 FT. Above Land Surface*
*Top of casing terminated at/or below land surface may require a variance in accordance with 15A NCAC 2C .0118.

e. YIELD (gpm): N/A METHOD OF TEST N/A

f. DISINFECTION: Type N/A Amount N/A

g. WATER ZONES (depth):

Top N/A	Bottom	Top	Bottom
Top	Bottom	Top	Bottom
Top	Bottom	Top	Bottom

7. CASING:

Depth		Diameter	Thickness/ Weight	Material
Top 0	Bottom 7.0 Ft.	2"	Sch40	PVC
Top	Bottom Ft.			
Top	Bottom Ft.			

8. GROUT:

Depth		Material	Method
Top 0	Bottom 3.0 Ft.	Portland	Tremie
Top 3.0	Bottom 5.0 Ft.	Bentonite	Tremie
Top	Bottom Ft.		

9. SCREEN:

Depth		Diameter	Slot Size	Material
Top 7.0	Bottom 27.0 Ft.	2 in.	.010 in.	PVC
Top	Bottom Ft.	in.	in.	
Top	Bottom Ft.	in.	in.	

10. SAND/GRAVEL PACK:

Depth		Size	Material
Top 5.0	Bottom 27.0 Ft.	#1	Sand
Top	Bottom Ft.		
Top	Bottom Ft.		

11. DRILLING LOG

Top	Bottom	Formation Description
0	4.0'	Brown, moist, silty, fine/medium SAND
8.0	12.0	Green/gray, wet, fine/medium SILT & SAND
12.0	16.0	Brown/tan, wet, silty, fine/ medium SAND

12. REMARKS:

I DO HEREBY CERTIFY THAT THIS WELL WAS CONSTRUCTED IN ACCORDANCE WITH 15A NCAC 2C, WELL CONSTRUCTION STANDARDS, AND THAT A COPY OF THIS RECORD HAS BEEN PROVIDED TO THE WELL OWNER

SIGNATURE OF CERTIFIED WELL CONTRACTOR 7/13/13 DATE

Joshua Ellingworth
PRINTED NAME OF PERSON CONSTRUCTING THE WELL

Submit within 30 days of completion to: Division of Water Quality - Information Processing, 1617 Mail Service Center, Raleigh, NC 27699-161, Phone : (919) 807-6300

Form GW-1b
Rev. 2/09

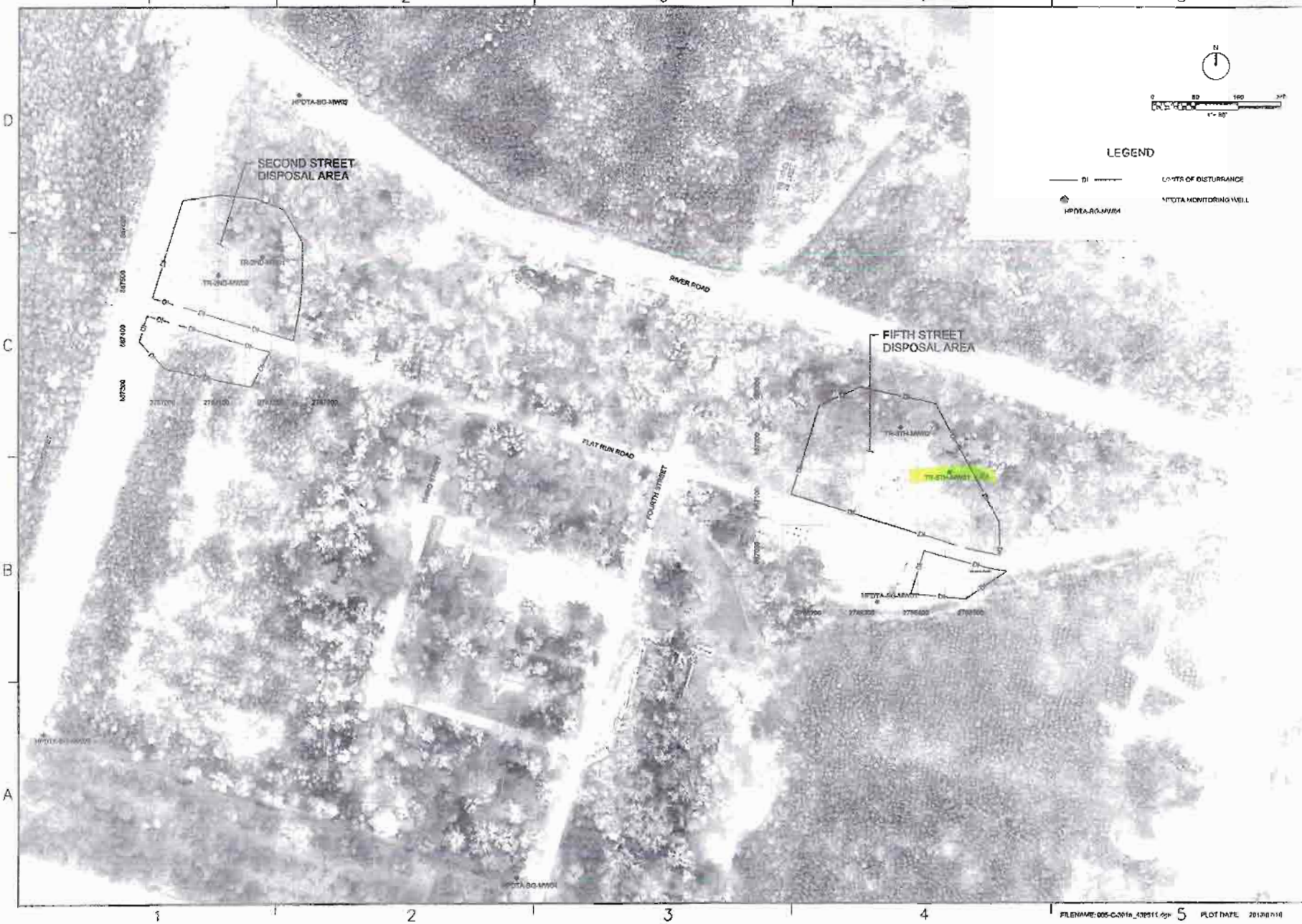

NAVFAC

PRELIMINARY DRAWING

FIGURE - 1

NAVAL FACILITIES ENGINEERING COMMAND ATLANTIC

REMEDIAL INVESTIGATION

WELL LOCATIONS

FILENAME: 005-C-001a_430511.dgn PLOT DATE: 2013/07/10

NON RESIDENTIAL WELL CONSTRUCTION RECORD

North Carolina Department of Environment and Natural Resources- Division of Water Quality

WELL CONTRACTOR CERTIFICATION # 3544

1. WELL CONTRACTOR:

Joshua Ellingworth
Well Contractor (Individual) Name

Parratt-Wolff, Inc.
Well Contractor Company Name

501 Millstone Drive
Street Address

Hillsborough NC 27278
City or Town State Zip Code

(919) 644-2814
Area code Phone number

2. WELL INFORMATION:

WELL CONSTRUCTION PERMIT# _____

OTHER ASSOCIATED PERMIT#(if applicable) _____

SITE WELL ID #(if applicable) TR-5TH-MW02

3. WELL USE (Check One Box) Monitoring ☑ Municipal/Public ☐

Industrial/Commercial ☐ Agricultural ☐ Recovery ☐ Injection ☐

Irrigation ☐ Other ☐ (list use) _____

DATE DRILLED 6/13/13

4. WELL LOCATION:

5th Street
(Street Name, Numbers, Community, Subdivision, Lot No., Parcel, Zip Code)

CITY: Hertford COUNTY Perquimans

TOPOGRAPHIC / LAND SETTING: (check appropriate box)

☐Slope ☐Valley ☑Flat ☐Ridge ☐Other _____

LATITUDE 36 ° ___ ' ___ " DMS OR 36.10363337 DD

LONGITUDE 76 ° ___ ' ___ " DMS OR 76.33107662 DD

Latitude/longitude source: ☐GPS ☑Topographic map

(location of well must be shown on a USGS topo map andattached to this form if not using GPS)

5. FACILITY (Name of the business where the well is located.)

Harvey Point Defense Testi
Facility Name Facility ID# (if applicable)

2835 Harvey Point Road
Street Address

Hertford NC 27944
City or Town State Zip Code

Contact Name

Mailing Address

City or Town State Zip Code

( ) _____
Area code Phone number

6. WELL DETAILS:

a. TOTAL DEPTH: 27.0'

b. DOES WELL REPLACE EXISTING WELL? YES ☐ NO ☑

c. WATER LEVEL Below Top of Casing: 5.0 FT.
(Use "+" if Above Top of Casing)

d. TOP OF CASING IS 2.0 FT. Above Land Surface*
*Top of casing terminated at/or below land surface may require a variance in accordance with 15A NCAC 2C .0118.

e. YIELD (gpm): N/A METHOD OF TEST N/A

f. DISINFECTION: Type N/A Amount N/A

g. WATER ZONES (depth):

Top N/A Bottom ___ Top ___ Bottom ___
Top ___ Bottom ___ Top ___ Bottom ___
Top ___ Bottom ___ Top ___ Bottom ___

7. CASING:

Depth		Diameter	Thickness/ Weight	Material
Top 0	Bottom 7.0	Ft. 2"	Sch40	PVC
Top ___	Bottom ___	Ft. ___	___	___
Top ___	Bottom ___	Ft. ___	___	___

8. GROUT:

Depth		Material	Method
Top 0	Bottom 3.0	Ft. Portland	Tremie
Top 3.0	Bottom 5.0	Ft. Bentonite	Tremie
Top ___	Bottom ___	Ft. ___	___

9. SCREEN:

Depth		Diameter	Slot Size	Material
Top 7.0	Bottom 27.0	Ft. 2 in.	.010 in.	PVC
Top ___	Bottom ___	Ft. ___ in.	___ in.	___
Top ___	Bottom ___	Ft. ___ in.	___ in.	___

10. SAND/GRAVEL PACK:

Depth		Size	Material
Top 5.0	Bottom 27.0	Ft. #1	Sand
Top ___	Bottom ___	Ft. ___	___
Top ___	Bottom ___	Ft. ___	___

11. DRILLING LOG

Top	Bottom	Formation Description
0	4.0'	Brown, moist, silty, fine/medium SAND
8.0	12.0	Green/gray, wet, fine/medium SAND
12.0	16.0	Brown/tan, wet, silty, fine/ medium SAND

12. REMARKS:

I DO HEREBY CERTIFY THAT THIS WELL WAS CONSTRUCTED IN ACCORDANCE WITH 15A NCAC 2C, WELL CONSTRUCTION STANDARDS, AND THAT A COPY OF THIS RECORD HAS BEEN PROVIDED TO THE WELL OWNER.

SIGNATURE OF CERTIFIED WELL CONTRACTOR DATE 7/13/13

Joshua Ellingworth
PRINTED NAME OF PERSON CONSTRUCTING THE WELL

Submit within 30 days of completion to: Division of Water Quality - Information Processing, 1617 Mail Service Center, Raleigh, NC 27699-161, Phone : (919) 807-6300

Form GW-1b
Rev. 2/09

NAVFAC

CH2MHILL

NAVAL FACILITIES ENGINEERING COMMAND MID-ATLANTIC

NORFOLK, VIRGINIA

REMEDIAL INVESTIGATION

WELL LOCATIONS

FIGURE - 1

PRELIMINARY DRAWING

FILENAME: 065-C-301a_#3061f.dwg PLOT DATE 2015/07/16

CH2MHILL	PROJECT NUMBER 439611.01.RI	BORING NUMBER TR-2ND-MW01	SHEET 1 OF 2

SOIL BORING LOG

PROJECT :	Towers Road Disposal Area Phase I RI	DRILLING CONTRACTOR AND DRILLER :	Parratt Wolff/J. Ellingworth, J. Terry
LOCATION/SITE :	HPDTA Hertford, NC/2nd Street Disposal Area	DRILLING METHOD AND EQUIPMENT USED :	IRA300, HAS 4.25" ID, 4' Macrocore Sampler
DATE :	6/10/2013	WATER LEVEL :	5.4' bgs
START TIME :	1340	GROUND SURFACE CONDITIONS :	Grass Cover
END TIME :	1545	LOGGER :	T. Stewart/VBO

DEPTH (FT)	SAMPLE INTERVAL (FT)	SAMPLE RECORVERY (FT)	SAMPLE COLLECTION TIME	SOIL DESCRIPTION SOIL NAME, USCS GROUP SYMBOL, COLOR, MOISTURE CONTENT, RELATIVE DENSITY, OR CONSISTENCY, SOIL STRUCTURE, MINERALOGY	COMMENTS DEPTH OF CASING, DRILLING RATE, DRILLING FLUID LOSS, TESTS, AND INSTRUMENTATION. PID (ppm)
	0-4	2.4/4.0	NOT SAMPLED (NS)	0.0 - 1.0: Silty SAND (SM) dark reddish brown (5YR 3/2), moist, loose, very fine sand, broken glass, ceramic debris 1.0 - 2.3: Silty SAND (SM) light yellowish brown (10YR 6/4), dry-moist, nonplastic, very fine sand, mottled 10% yellowish red (5YR 5/8), trace very fine gravel, debris 2.3 - 2.4: Silty SAND with glass gravel (SM-GM), black (5YR 2.5/1), moist, nonplastic, very fine grain 2.4 - 4.0: No Recovery (NR)	1.3 0.3
5	4-8	1.8/4.0	NS	4.0 - 4.4: Silty SAND (SM) black and light yellowish brown (2.5Y 6/4), moist, non-low plastic, debris, large (3") metal debris 4.4 - 5.8: CLAY w/sand silty sand (SM), dark greenish gray (Gley 1 5/5GY), wet @5.4', mottled light greenish gray (Gley 1 7/10Y), high silt content, fine grain sands 5.8 - 8.0: NR	0.7 2.3
10	8-12	3.0/4.0	NS	8.0 - 11.0: CLAY w/silt and sand (CL) mottled light gray, yellowish brown, and strong brown, moist, stiff, very fine grain sands, higher sand content from 10-11' bgs 11.0 - 12.0: NR	0.9 1.0
15	12-16	4.0/4.0	NS	12.0-16.0: Silty SAND (SM) pale brown-light yellowish brown (10YR 6/3-4), wet @ 12.8' bgs, medium to fine grain from 12-15.5' bgs, fine to medium grain from 15.5-16' bgs	1.4 2.0
20	16-20	4.0/4.0	NS	16.0-20.0: Silty SAND (SM) pale brown-light yellowish brown (10YR 6/3-4), wet, grades to pale brown (2.5Y 7/4) @ 17' bgs, fine to medium	0.9 0.5
	20-24	4.0/4.0	NS	20.0-23.0: Silty SAND (SM) pale brown (2.5Y 7/4), fine to medium 23.0-24.0: Silty sand (SM) discolored yellowish brown (10YR 5/8, wet, very loose to loose, medium to fine grain sands	0.9 0.8
25	24-28	4.0/4.0	NS	24.0-26.4: Silty SAND (SM) discolored yellowish brown (10YR 5/8), wet, very loose to loose, medium to fine grain sands 26.4-28.0: Silty SAND (SM) light yellowish brown (2.5Y 6/3), wet, loose, trace strong brown laminations, medium grain, non plastic	1.5 1.0
30	28-32	4.0/4.0	NS	28.0-29.4: Silty SAND (SM) light yellowish brown w/very dark greenish brow 29.4-29.7: CLAY (CL) brown (10YR 5/3), moist to dry, medium plasticity, stiff to very stiff, trace silt micas	0.8

PROJECT NUMBER	BORING NUMBER	
439611.01.RI	TR-2ND-MW01	SHEET 2 OF 2

SOIL BORING LOG

PROJECT :	Towers Road Disposal Area Phase I RI	DRILLING CONTRACTOR AND DRILLER :	Parratt Wolff/J. Ellingworth, J. Terry
LOCATION/SITE :	HPDTA Hertford, NC/2nd Street Disposal Area	DRILLING METHOD AND EQUIPMENT USED :	IRA300, HAS 4.25" ID, 4' Macrocore Sampler
DATE :	6/10/2013	WATER LEVEL :	5.4' bgs
START TIME :	1340	GROUND SURFACE CONDITIONS :	Grass Cover
END TIME :	1545	LOGGER :	T. Stewart/VBO

DEPTH (FT)	SAMPLE INTERVAL (FT)	SAMPLE RECORVERY (FT)	SAMPLE COLLECTION TIME	SOIL DESCRIPTION SOIL NAME, USCS GROUP SYMBOL, COLOR, MOISTURE CONTENT, RELATIVE DENSITY, OR CONSISTENCY, SOIL STRUCTURE, MINERALOGY	COMMENTS DEPTH OF CASING, DRILLING RATE, DRILLING FLUID LOSS, TESTS, AND INSTRUMENTATION. PID (ppm)
	28-32	4.0/4.0	NS	29.7-30.8: CLAY (CL) w/silt and sand greenish gray (Gley 1 5/10GY), moist to dry, stiff, medium plasticity, trace to very fine grain sand 30.8-32.0: Silty SAND (SM) discolored strong brown (7.5YR 5/6), moist to dry, stiff, medium plasticity, fine to coarse grain	1.1
	32-36	4.0/4.0	NS	31.0-33.0: Silty SAND (SM) yellow (2.5Y 8/6), moist to dry, stiff, medium plasticity, fine to coarse grain 33.0-36.0: Silty SAND (SM) yellow (2.5Y 8/6), non-plastic, black laminations, medium to coarse grain	0.6 0.5
	36-40	4.0/4.0	NS	36.0-40.0: Silty SAND (SM) yellow (2.5Y 8/6), non-plastic, black laminations, medium grain w/trace coarse sand component	0.4 0.3
				End Boring at 40' bgs	

CH2MHILL	PROJECT NUMBER 439611.01.RI	BORING NUMBER TR-2ND-MW02	SHEET 1 OF 2

SOIL BORING LOG

PROJECT :	Towers Road Disposal Area Phase I RI	DRILLING CONTRACTOR AND DRILLER :	Parratt Wolff/J. Ellingworth, J. Terry
LOCATION/SITE :	HPDTA Hertford, NC/2nd Street Disposal Area	DRILLING METHOD AND EQUIPMENT USED :	IRA300, HAS 4.25" ID, 4' Macrocore Sampler
DATE :	6/11/2013	WATER LEVEL :	4.3' bgs
START TIME :	1120	GROUND SURFACE CONDITIONS :	Grass Cover (Adjacent to Construction Entrance)
END TIME :	1215	LOGGER :	T. Stewart/VBO

DEPTH (FT)	SAMPLE INTERVAL (FT)	SAMPLE RECORVERY (FT)	SAMPLE COLLECTION TIME	SOIL DESCRIPTION SOIL NAME, USCS GROUP SYMBOL, COLOR, MOISTURE CONTENT, RELATIVE DENSITY, OR CONSISTENCY, SOIL STRUCTURE, MINERALOGY	COMMENTS DEPTH OF CASING, DRILLING RATE, DRILLING FLUID LOSS, TESTS, AND INSTRUMENTATION. PID (ppm)
	0-4	2.0/4.0	NOT SAMPLED (NS)	0.0 - 1.6: Silty SAND w/gravel (SM) black (5YR 2.5/1), moist, medium dense, low plastic fines, fine to coarse debris (glass, brick, asphalt), very fine to fine grain sands 1.6-2.0: Silty SAND (SM) dark greenish gray (GLEY 1 5/5GY), moist, high silt content, very fine grain to fine grain sands, non-plastic, medium dense, coarse debris and gravel 2.0-4.0: No Recovery (NR)	1.0 NA
5	4-8	4.0/4.0	NS	4.0-6.9: Silty SAND (SM) dark greenish gray (Gley 1 5/5GY), wet at 4.3' bgs, loose to medium dense, nonplastic, fine grain to very fine grain, homogeneous 6.9-8.0: SILT (ML) light greenish gray (Gley 1 7/10Y), wet, nonplastic, stiff, trace very fine grain sand, blended and mottled strong brown	1.8 1.4
10	8-12	4.0/4.0	NS	8.0-10.8: SILT (ML) light greenish gray (Gley 1 7/10Y), wet, nonplastic, stiff, trace very fine grain sand, blended and mottled strong brown 10.8-12.0: CLAY with silt (CL) light greenish gray (Gley 1 7/10Y), moist, stiff, low plasticity, high silt content	1.2 0.5
15	12-16	4.0/4.0	NS	12-16: Silty SAND (SM) pale brown to light yellowish brown (10YR 6/3) with strong brown mottling, fine to medium grain, loose to very loose	1.6 1.5
20	16-20	4.0/4.0	NS	16-20: Silty SAND (SM) light gray (2.5Y 7/2) with abundant fine grain black particles, fine to medium grain, loose to very loose	1.0 0.8
25	20-24	4.0/4.0	NS	20-24: Silty SAND (SM) light gray (2.5Y 7/2) with coarse sand component discolored yellowish red, medium grain, loose to very loose	1.5 1.4
30	24-28	4.0/4.0	NS	24-28: Silty SAND (SM) light gray (2.5Y 7/2) with coarse sand component discolored yellowish red, medium grain, loose to very loose	1.6 1.2
	28-32	4.0/4.0	NS	28.0-30.0: CLAY with sand (CL/CH) greenish gray (Gley 1 5/10GY), moist, stiff to very stiff, medium plasticity, trace coarse light gray sand stringers, some silt micas	1.3

CH2MHILL	PROJECT NUMBER 439611.01.RI	BORING NUMBER TR-2ND-MW02	SHEET 2 OF 2

SOIL BORING LOG

PROJECT :	Towers Road Disposal Area Phase I RI	DRILLING CONTRACTOR AND DRILLER :	Parratt Wolff/J. Ellingworth, J. Terry
LOCATION/SITE :	HPDTA Hertford, NC/2nd Street Disposal Area	DRILLING METHOD AND EQUIPMENT USED :	IRA300, HAS 4.25" ID, 4' Macrocore Sampler
DATE :	6/11/2013	WATER LEVEL :	4.3' bgs
START TIME :	1120	GROUND SURFACE CONDITIONS :	Grass Cover
END TIME :	1215	LOGGER :	T. Stewart/VBO

DEPTH (FT)	SAMPLE INTERVAL (FT)	SAMPLE RECORVERY (FT)	SAMPLE COLLECTION TIME	SOIL DESCRIPTION SOIL NAME, USCS GROUP SYMBOL, COLOR, MOISTURE CONTENT, RELATIVE DENSITY, OR CONSISTENCY, SOIL STRUCTURE, MINERALOGY	COMMENTS DEPTH OF CASING, DRILLING RATE, DRILLING FLUID LOSS, TESTS, AND INSTRUMENTATION. PID (ppm)
	28-32	4.0/4.0	NS	30.0-32.0: Silty SAND (SM) very pale brown to yellow (10YR 7/4-6), wet, very loose, medium grain, strong brown mottling	0.8
				End Boring at 32' bgs	
35					
40					
45					
50					
55					

CH2MHILL	PROJECT NUMBER	BORING NUMBER	SHEET 1 OF 2
	439611.01.RI	TR-5TH-MW01	

SOIL BORING LOG

PROJECT :	Towers Road Disposal Area Phase I RI	DRILLING CONTRACTOR AND DRILLER :	Parratt Wolff/J. Ellingworth, J. Terry
LOCATION/SITE :	HPDTA Hertford, NC/5th Street Disposal Area	DRILLING METHOD AND EQUIPMENT USED :	IRA300, HAS 4.25" ID, 4' Macrocore Sampler
DATE :	6/12/2013	WATER LEVEL :	4.2' bgs
START TIME :	1250	GROUND SURFACE CONDITIONS :	Mulch (Recent Vegetation Grubbing)
END TIME :	1355	LOGGER :	T. Stewart/VBO

DEPTH (FT)	SAMPLE INTERVAL (FT)	SAMPLE RECORVERY (FT)	SAMPLE COLLECTION TIME	SOIL DESCRIPTION SOIL NAME, USCS GROUP SYMBOL, COLOR, MOISTURE CONTENT, RELATIVE DENSITY, OR CONSISTENCY, SOIL STRUCTURE, MINERALOGY	COMMENTS DEPTH OF CASING, DRILLING RATE, DRILLING FLUID LOSS, TESTS, AND INSTRUMENTATION. PID (ppm)
	0-4	2.0/4.0	NOT SAMPLED (NS)	0.0-2.0: Silty SAND (SM) brown (7.5YR 5/3), dry, medium dense, low plastic, fines, roots, gravel, metal, and rock debris 2.0-4.0: No Recovery (NR)	6.6 NA
5	4-8	2.4/4.0	NS	4.0-5.7: NR 5.7-8.0: Silty SAND (SM) dark greenish gray (Gley 1 5/5GY), wet, loose to medium dense, very fine to fine grain sands, nonplastic, light greenish gray mottling	NA 5.4
10	8-12	4.0/4.0	NS	8.0-9.4: Silty SAND (SM) dark greenish gray (Gley 1 5/5GY), wet, loose to medium dense, very fine to fine grain sands, nonplastic, light greenish gray mottling 9.4-12.0: Clayey SAND (SC) yellowish brown (10YR 5/6) with light greenish gray mottling, fine grain to coarse sands, medium plasticity,	7.0 11.0
15	12-16	4.0/4.0	NS	12.0-16.0: Silty SAND (SM) pale brown (2.5Y 7/4) to light gray (10YR 7/1), mottled strong brown, wet, very loose to loose, abundant micas, some black particles, very fine grain to fine grain	9.4 10.1
20	16-20	4.0/4.0	NS	16.0-20.0: Silty SAND (SM) pale brown (2.5Y 7/4) to light gray (10YR 7/1), mottled strong brown, wet, very loose to loose, abundant micas, some black particles, very fine grain to fine grain	9.1 8.4
	20-24	4.0/4.0	NS	20.0-24.0: Silty SAND (SM) reddish yellow (7.5YR 6/8), mottled strong brown, wet, very loose to loose, abundant micas, some black particles, very fine grain to fine grain	6.2 7.7
25	24-28	4.0/4.0	NS	24.0-25.0: Clayey SAND (SC) pale brown (2.5Y 7/4), light gray (10YR 7/1) and strong brown (7.5YR 5/6), wet, very stiff, medium to high plasticity, medium to coarse sands, trace fine grain black laminations 25.0-28.0: Silty SAND/poorly sorted sand (SM-SP), wet, pale brown (2.5Y 7/4), very loose to loose, medium grain	7.6 6.4
30	28-32	4.0/4.0	NS	28.0-32.0: Silty sand/poorly sorted SAND (SM-SP), wet, pale brown (2.5Y 7/4), very loose to loose, coarse grain, laminated with fine grain black particles	5.1

CH2MHILL	PROJECT NUMBER 439611.01.RI	BORING NUMBER TR-5TH-MW01	SHEET 2 OF 2

SOIL BORING LOG

PROJECT :	Towers Road Disposal Area Phase I RI	DRILLING CONTRACTOR AND DRILLER :	Parratt Wolff/J. Ellingworth, J. Terry
LOCATION/SITE :	HPDTA Hertford, NC/5th Street Disposal Area	DRILLING METHOD AND EQUIPMENT USED :	IRA300, HAS 4.25" ID, 4' Macrocore Sampler
DATE :	6/12/2013	WATER LEVEL :	4.2' bgs
START TIME :	1250	GROUND SURFACE CONDITIONS :	Mulch (Recent Vegetation Grubbing)
END TIME :	1355	LOGGER :	T. Stewart/VBO

DEPTH (FT)	SAMPLE INTERVAL (FT)	SAMPLE RECORVERY (FT)	SAMPLE COLLECTION TIME	SOIL DESCRIPTION SOIL NAME, USCS GROUP SYMBOL, COLOR, MOISTURE CONTENT, RELATIVE DENSITY, OR CONSISTENCY, SOIL STRUCTURE, MINERALOGY	COMMENTS DEPTH OF CASING, DRILLING RATE, DRILLING FLUID LOSS, TESTS, AND INSTRUMENTATION. PID (ppm)
	28-32	4.0/4.0	NS		5.9
				End Boring at 32' bgs	
35					
40					
45					
50					
55					

CH2MHILL	PROJECT NUMBER 439611.01.RI	BORING NUMBER TR-5TH-MW02	SHEET 1 OF 2

SOIL BORING LOG

PROJECT :	Towers Road Disposal Area Phase I RI	DRILLING CONTRACTOR AND DRILLER :	Parratt Wolff/J. Ellingworth, J. Terry
LOCATION/SITE :	HPDTA Hertford, NC/5th Street Disposal Area	DRILLING METHOD AND EQUIPMENT USED :	IRA300, HAS 4.25" ID, 4' Macrocore Sampler
DATE :	6/13/2013	WATER LEVEL :	4.5' bgs
START TIME :	1325	GROUND SURFACE CONDITIONS :	Mulch (Recent Vegetation Grubbing)
END TIME :	1400	LOGGER :	T. Stewart/VBO

DEPTH (FT)	SAMPLE INTERVAL (FT)	SAMPLE RECORVERY (FT)	SAMPLE COLLECTION TIME	SOIL DESCRIPTION SOIL NAME, USCS GROUP SYMBOL, COLOR, MOISTURE CONTENT, RELATIVE DENSITY, OR CONSISTENCY, SOIL STRUCTURE, MINERALOGY	COMMENTS DEPTH OF CASING, DRILLING RATE, DRILLING FLUID LOSS, TESTS, AND INSTRUMENTATION. PID (ppm)
	0-4	4.0/4.0	NOT SAMPLED (NS)	0.0-1.0: Clayey SAND (SC) very dark gray (5YR 3/1), dry, medium dense, low plastic, glass and gravel debris 1.0-4.0: Sandy CLAY w/silt (CL), mottled light gray, pale brown w/yellowish brown mottling (2.5Y 7/4), medium dense sand, stiff to very stiff, low plasticity	3.6 1.7
5	4-8	4.0/4.0	NS	4.0-8.0: SILT w/sand and silty SAND (ML-SM), pale brown (2.5Y 7/4), trace greenish gray mottling at 4.8-5.4' bgs, coarse brown organics at 4.2-4.5' bgs, low plastic fines, trace roots, very fine grain sands, high silt content, tight pore spaces	3.5 5.1
10	8-12	4.0/4.0	NS	8.0-9.0: SILT w/sand and silty SAND (ML-SM), pale brown (2.5Y 7/4), trace greenish gray mottling at 4.8-5.4' bgs, coarse brown organics at 4.2-4.5' bgs, low plastic fines, trace roots, very fine grain sands, high silt content, tight pore spaces 9.0-11.5: Clayey SAND (SC), pale brown, wet, low to medium plasticity 11.5-12.0: Silty SAND (SM) yellowish brown (10YR 5/5), wet, coarse	5.8 5.0
15	12-16	4.0/4.0	NS	12.0-16.0: Silty SAND (SM) pale yellow (5Y 7/3), wet, coarse grain	5.9 3.5
20	16-20	4.0/4.0	NS	16.0-20.0: Silty SAND (SM) pale yellow (5Y 7/3), wet, coarse grain	4.7 5.0
25	20-24	4.0/4.0	NS	20.0-24.0: Silty SAND (SM) pale yellow (5Y 7/3), wet, coarse grain	5.7 4.4
30	24-28	4.0/4.0	NS	24.0-27.5: Silty SAND (SM) discolored yellowish brown (10YR 5/8), wet, coarse grain 27.5-28.0: Clayey SAND (SC) pale yellow light gray (5Y 7/3-2) w/ strong brown mottling, wet, coarse grain	5.2 5.0
	28-32	4.0/4.0	NS	28.0-32.0: Clayey SAND (SC) pale yellow light gray (5Y 7/3-2) w/ strong brown mottling, wet, coarse grain	4.1

CH2MHILL	PROJECT NUMBER 439611.01.RI	BORING NUMBER TR-5TH-MW02	SHEET 2 OF 2

SOIL BORING LOG

PROJECT :	Towers Road Disposal Area Phase I RI	DRILLING CONTRACTOR AND DRILLER :	Parratt Wolff/J. Ellingworth, J. Terry
LOCATION/SITE :	HPDTA Hertford, NC/5th Street Disposal Area	DRILLING METHOD AND EQUIPMENT USED :	IRA300, HAS 4.25" ID, 4' Macrocore Sampler
DATE :	6/13/2013	WATER LEVEL :	4.5' bgs
START TIME :	1325	GROUND SURFACE CONDITIONS :	Mulch (Recent Vegetation Grubbing)
END TIME :	1400	LOGGER :	T. Stewart/VBO

DEPTH (FT)	SAMPLE INTERVAL (FT)	SAMPLE RECORVERY (FT)	SAMPLE COLLECTION TIME	SOIL DESCRIPTION SOIL NAME, USCS GROUP SYMBOL, COLOR, MOISTURE CONTENT, RELATIVE DENSITY, OR CONSISTENCY, SOIL STRUCTURE, MINERALOGY	COMMENTS DEPTH OF CASING, DRILLING RATE, DRILLING FLUID LOSS, TESTS, AND INSTRUMENTATION. PID (ppm)
	28-32	4.0/4.0	NS		3.8
				End Boring at 32' bgs	
35					
40					
45					
50					
55					

CH2MHILL	PROJECT NUMBER 439611.01.RI	BORING NUMBER HPDTA-BG-MW01	SHEET 1 OF 2

SOIL BORING LOG

PROJECT :	Towers Road Disposal Area Phase I RI	DRILLING CONTRACTOR AND DRILLER :	Parratt Wolff/J. Ellingworth, J. Terry
LOCATION/SITE :	HPDTA Hertford, NC/Background	DRILLING METHOD AND EQUIPMENT USED :	IRA300, HAS 4.25" ID, 4' Macrocore Sampler
DATE :	6/11/2013 & 6/12/2013	WATER LEVEL :	5.8' bgs
START TIME :	1620	GROUND SURFACE CONDITIONS :	Grass Cover (South of concrete slab)
END TIME :	0935	LOGGER :	T. Stewart/VBO

DEPTH (FT)	SAMPLE INTERVAL (FT)	SAMPLE RECORVERY (FT)	SAMPLE COLLECTION TIME	SOIL DESCRIPTION SOIL NAME, USCS GROUP SYMBOL, COLOR, MOISTURE CONTENT, RELATIVE DENSITY, OR CONSISTENCY, SOIL STRUCTURE, MINERALOGY	COMMENTS DEPTH OF CASING, DRILLING RATE, DRILLING FLUID LOSS, TESTS, AND INSTRUMENTATION. PID (ppm)
	0-4	4.0/4.0	NOT SAMPLED (NS)	0.0-1.8: Silty SAND (SM) dark gray to dark greenish brown (10YR 4/1-2), moist, loose, fine to medium grain, abundant organics, trace gravel (road base) at 8" bgs, fill sand lense from 1.6 to 1.8' (pale brown, SP) 1.8-4.0: CLAY (CL) yellowish brown (10YR 5/4), dry, stiff to very stiff, medium to high plasticity, trace silt and very fine grain sand, trace brownish yellow mottling	2.4 2.0
5	4-8	4.0/4.0	NS	4.0-8.0: SILT (ML)/silty sand (SM) dark greenish gray and greenish gray (Gley 1 5/10Y and Gley 2 6/10G), wet at 5.8' bgs, medium dense, low plastic fines, high silt content, very fine grain sands, high mica content, black organics very fine grain particles at 5.5-6.3' bgs, strong	3.1 4.4
10	8-12	4.0/4.0	NS	8.0-11.4: SILT (ML)/silty sand (SM) dark greenish gray and greenish gray (Gley 1 5/10Y and Gley 2 6/10G), wet, medium dense, low plastic fines, high silt content, very fine grain sands, high mica content, strong brown mottling 11.4-12.0: Silty SAND (SM) pale brown (2.5Y 7/3), wet, loose, nonplastic, medium to coarse sands	3.4 2.7
15	12-16	4.0/4.0	NS	12.0-12.7: Clayey SAND (SC) pale brown (2.5Y 7/3) w/strong brown banding, wet, medium to high plasticity, medium to coarse sands 12.7-16.0: Silty SAND (SM) pale brown to light gray (2.5Y 7/2-3), wet, loose, nonplastic, medium to coarse sands	4.5 4.5
20	16-20	4.0/4.0	NS	16.0-20.0: Silty SAND (SM) pale brown to light gray (2.5Y 7/2-3), wet, loose, nonplastic, medium to coarse sands	3.1 3.3
	20-24	4.0/4.0	NS	20.0-24.0: Silty SAND (SM) pale brown to light gray (2.5Y 7/2-3), wet, loose, nonplastic, medium to coarse sands, yellowish brown discoloration from 20-23' bgs w/intense reddish brown organic staining	2.8 2.5
25	24-28	4.0/4.0	NS	24.0-28.0: Silty SAND (SM) light gray (2.5Y 7/2), wet, loose, nonplastic, medium to coarse sands	1.6 1.8
30	28-32	4.0/4.0	NS	28.0-32.0: Silty to poorly graded SAND (SM-SP) pale brown (2.5Y 7/4), wet, very loose to loose, nonplastic fines, low silt content, medium to coarse sand	1.2

PROJECT NUMBER	BORING NUMBER	
439611.01.RI	HPDTA-BG-MW01	SHEET 2 OF 2

SOIL BORING LOG

PROJECT :	Towers Road Disposal Area Phase I RI	DRILLING CONTRACTOR AND DRILLER :	Parratt Wolff/J. Ellingworth, J. Terry
LOCATION/SITE :	HPDTA Hertford, NC/Background	DRILLING METHOD AND EQUIPMENT USED :	IRA300, HAS 4.25" ID, 4' Macrocore Sampler
DATE :	6/11/2013 & 6/12/2013	WATER LEVEL :	5.8' bgs
START TIME :	1620	GROUND SURFACE CONDITIONS :	Grass Cover (South of concrete slab)
END TIME :	0935	LOGGER :	T. Stewart/VBO

DEPTH (FT)	SAMPLE INTERVAL (FT)	SAMPLE RECORVERY (FT)	SAMPLE COLLECTION TIME	SOIL DESCRIPTION SOIL NAME, USCS GROUP SYMBOL, COLOR, MOISTURE CONTENT, RELATIVE DENSITY, OR CONSISTENCY, SOIL STRUCTURE, MINERALOGY	COMMENTS DEPTH OF CASING, DRILLING RATE, DRILLING FLUID LOSS, TESTS, AND INSTRUMENTATION. PID (ppm)
	28-32	4.0/4.0	NS		1.4
	32-36	4.0/4.0	NS	32.0-36.0: Silty to poorly graded SAND (SM-SP) pale brown (2.5Y 7/4) from 32-34.3' bgs and light gray (2.5Y 7/2) from 34.3-36' bgs, wet, very loose to loose, nonplastic fines, low silt content, very coarse sands w/granules and pebbles (up to 9mm) from 32.5-34.3' bgs, coarse sand from 34.3-36' bgs, clay seams (<1/4") at 35.4' and 35.7' light gray low	1.5
35					1.2
				End Boring at 36' bgs	
40					
45					
50					
55					

CH2MHILL	PROJECT NUMBER 439611.01.RI	BORING NUMBER HPDTA-BG-MW02	SHEET 1 OF 2

SOIL BORING LOG

PROJECT :	Towers Road Disposal Area Phase I RI	DRILLING CONTRACTOR AND DRILLER :	Parratt Wolff/J. Ellingworth, J. Terry
LOCATION/SITE :	HPDTA Hertford, NC/Background	DRILLING METHOD AND EQUIPMENT USED :	IRA300, HAS 4.25" ID, 4' Macrocore Sampler
DATE :	6/13/2013	WATER LEVEL :	4.8' bgs
START TIME :	0840	GROUND SURFACE CONDITIONS :	Grass Cover (Adjacent to River Road)
END TIME :	0935	LOGGER :	T. Stewart/VBO

DEPTH (FT)	SAMPLE INTERVAL (FT)	SAMPLE RECORVERY (FT)	SAMPLE COLLECTION TIME	SOIL DESCRIPTION SOIL NAME, USCS GROUP SYMBOL, COLOR, MOISTURE CONTENT, RELATIVE DENSITY, OR CONSISTENCY, SOIL STRUCTURE, MINERALOGY	COMMENTS DEPTH OF CASING, DRILLING RATE, DRILLING FLUID LOSS, TESTS, AND INSTRUMENTATION. PID (ppm)
	0-4	4.0/4.0	NOT SAMPLED (NS)	0.0-0.3: CLAY w/sand (CL) very dark gray (10YR 3/1), moist, stiff, low plasticity, very fine grain to fine grain sands, roots 0.3-1.8: Silty SAND (SM) yellowish brown (10YR 5/8), moist, dense, medium to coarse sands, non to low plastic fines 1.8-2.1: Silty SAND/poorly sorted SAND (SM-SP), gray to light gray (2.5Y 6-7/1), moist, low silt content, nonplastic, medium dense, laminated pale yellow and very dark gray (<1/8")	7.6 6.6
5	4-8	4.0/4.0	NS	2.1-8.0: SILT w/sand / silty SAND (SM) bluish gray (Gley 2 5-6/1) grading to light greenish gray (Gley 1 7/1), moist to wet (wet at 4.8' bgs), tight pore spaces, mottled yellowish brown, non to low plastic fines, very fine grain sands	5.6 5.3
10	8-12	4.0/4.0	NS	8.0-12.0: SILT w/sand / silty sand (SM) bluish gray (Gley 2 5-6/1) grading to light greenish gray (Gley 1 7/1), wet, tight pore spaces, mottled yellowish brown, non to low plastic fines, very fine grain sands	7.4 5.8
15	12-16	4.0/4.0	NS	12.0-16.0: Silty SAND (SM) light olive gray (5Y 6/2) from 12-15' bgs and pale brown (2.5Y 7/4) from 15-16' bgs, wet, discolored strong brown concentrations from 15-15.3' bgs, medium grain	10.8 5.3
20	16-20	4.0/4.0	NS	16.0-20.0: Silty SAND (SM) pale brown (2.5Y 7/4), wet, strong brown mottling, medium to coarse grain	6.5 7.9
	20-24	4.0/4.0	NS	20.0-21.0: Silty SAND (SM) pale brown (2.5Y 7/4), wet, strong brown mottling, medium to coarse grain 21.0-21.5: CLAY (CL) grayish brown (2.5Y 5/2), moist, trace strong brown mottling, stiff, nonplastic, some coarse sand seams, reddish brown concentrations 22.5-24: Silty SAND (SM) pale yellow (2.5Y 8/2), wet, coarse to medium grain, very loose to loose	12.9 10.1
25	24-28	4.0/4.0	NS	24.0-28.0: Sitly SAND (SM) yellow (10YR 7/6), wet, coarse to medium grain, very loose to loose, clay stringers, very coarse to coarse sand seams w/weakly concentrated reddish brown sands	10.8 7.0
30	28-32	4.0/4.0	NS	28.0-32.0: Sitly SAND (SM) yellow (10YR 7/6), wet, coarse to medium grain, very loose to loose, micro black and reddish brown laminations	5.6

CH2MHILL	PROJECT NUMBER 439611.01.RI	BORING NUMBER HPDTA-BG-MW02	SHEET 2 OF 2

SOIL BORING LOG

PROJECT :	Towers Road Disposal Area Phase I RI	DRILLING CONTRACTOR AND DRILLER :	Parratt Wolff/J. Ellingworth, J. Terry
LOCATION/SITE :	HPDTA Hertford, NC/Background	DRILLING METHOD AND EQUIPMENT USED :	IRA300, HAS 4.25" ID, 4' Macrocore Sampler
DATE :	6/13/2013	WATER LEVEL :	4.8' bgs
START TIME :	0840	GROUND SURFACE CONDITIONS :	Grass Cover (Adjacent to River Road)
END TIME :	0935	LOGGER :	T. Stewart/VBO

DEPTH (FT)	SAMPLE INTERVAL (FT)	SAMPLE RECORVERY (FT)	SAMPLE COLLECTION TIME	SOIL DESCRIPTION SOIL NAME, USCS GROUP SYMBOL, COLOR, MOISTURE CONTENT, RELATIVE DENSITY, OR CONSISTENCY, SOIL STRUCTURE, MINERALOGY	COMMENTS DEPTH OF CASING, DRILLING RATE, DRILLING FLUID LOSS, TESTS, AND INSTRUMENTATION. PID (ppm)
	28-32	4.0/4.0	NS		4.5
				End Boring at 32' bgs	
35					
40					
45					
50					
55					

CH2MHILL	PROJECT NUMBER 439611.01.RI	BORING NUMBER HPDTA-BG-MW03	SHEET 1 OF 2

SOIL BORING LOG

PROJECT :	Towers Road Disposal Area Phase I RI	DRILLING CONTRACTOR AND DRILLER :	Parratt Wolff/J. Ellingworth, J. Terry
LOCATION/SITE :	HPDTA Hertford, NC/Background	DRILLING METHOD AND EQUIPMENT USED :	IRA300, HAS 4.25" ID, 4' Macrocore Sampler
DATE :	6/19/2013	WATER LEVEL :	6.1' bgs
START TIME :	0915	GROUND SURFACE CONDITIONS :	Grass Cover
END TIME :	0950	LOGGER :	T. Stewart/VBO

DEPTH (FT)	SAMPLE INTERVAL (FT)	SAMPLE RECORVERY (FT)	SAMPLE COLLECTION TIME	SOIL DESCRIPTION SOIL NAME, USCS GROUP SYMBOL, COLOR, MOISTURE CONTENT, RELATIVE DENSITY, OR CONSISTENCY, SOIL STRUCTURE, MINERALOGY	COMMENTS DEPTH OF CASING, DRILLING RATE, DRILLING FLUID LOSS, TESTS, AND INSTRUMENTATION. PID (ppm)
	0-4	4.0/4.0	NOT SAMPLED (NS)	0.0-0.2: Topsoil 0.2-2.1: Silty SAND (SM) light gray (7.5YR 7/1), dry, medium dense to dense, fine grain, roots, strong brown discoloration as blotches, low 2.1-3.7: CLAY w/silt (CL) pale brown (10YR 6/3), moist to dry, stiff, medium to high plasticity, very little to no sand 3.7-4.0: SILT (ML) pale brown, moist, loose to medium dense, non plastic, slightly cohesive, strong brown mottling	0.3 0.3
5	4-8	4.0/4.0	NS	4.0-5.0: SILT (ML) pale brown, moist, loose to medium dense, non plastic, slightly cohesive, strong brown mottling 5.0-8.0: Silt/silty SAND (ML-SM) very pale brown and light yellowish brown mottled from 5-6.8' bgs (10YR 7/4 & 5/6) grading to light gray (2.5Y 7/2) from 6.8-12' bgs, wet at 6.1' bgs, non to low plastic fines, fine grain to very fine grain sand	1.3 0.2
10	8-12	4.0/4.0	NS	8.0-12.0: CLAY w/sand (CL-CH) light gray (2.5Y 7/2), moist to wet, stiff, mottled strong brown in pockets, root structures/borrows/bioturbation throughout	1.1 0.9
15	12-16	4.0/4.0	NS	12.0-12.3: Silty SAND (SM) yellowish red (5YR 4/6), wet, non plastic, loose to medium dense, coarse 12.3-16: Silty SAND (SM) light brownish yellow (10YR 6/4), wet, loose to very loose, coarse sands	0.6 0.6
20	16-20	4.0/4.0	NS	16.0-20.0: Silty SAND (SM) light gray (2.5Y 7/2), wet, loose to very loose, coarse sands, brownish black organic discoloration	1.0 0.7
	20-24	4.0/4.0	NS	20.0-24.0: Silty SAND (SM) light gray (2.5Y 7/2), wet, loose to very loose, coarse sands, brownish black organic discoloration, very coarse fraction from 22-23' bgs	0.8 0.2
25	24-28	4.0/4.0	NS	24.0-28.0: Silty SAND (SM) light gray to very pale brown (10YR 7/2-3) from 24-27' bgs and brownish yellow (10YR 6/6) from 27-28' bgs, wet, loose to very loose, non plastic fines, coarse to medium sands	0.2 0.2
30				End Boring at 28' bgs	

CH2MHILL	PROJECT NUMBER	BORING NUMBER	SHEET 2 OF 2
	439611.01.RI	HPDTA-BG-MW03	

SOIL BORING LOG

PROJECT :	Towers Road Disposal Area Phase I RI	DRILLING CONTRACTOR AND DRILLER :	Parratt Wolff/J. Ellingworth, J. Terry
LOCATION/SITE :	HPDTA Hertford, NC/Background	DRILLING METHOD AND EQUIPMENT USED :	IRA300, HAS 4.25" ID, 4' Macrocore Sampler
DATE :	6/19/2013	WATER LEVEL :	6.1' bgs
START TIME :	0915	GROUND SURFACE CONDITIONS :	Grass Cover
END TIME :	0950	LOGGER :	T. Stewart/VBO

DEPTH (FT)	SAMPLE INTERVAL (FT)	SAMPLE RECORVERY (FT)	SAMPLE COLLECTION TIME	SOIL DESCRIPTION SOIL NAME, USCS GROUP SYMBOL, COLOR, MOISTURE CONTENT, RELATIVE DENSITY, OR CONSISTENCY, SOIL STRUCTURE, MINERALOGY	COMMENTS DEPTH OF CASING, DRILLING RATE, DRILLING FLUID LOSS, TESTS, AND INSTRUMENTATION. PID (ppm)
35					
40					
45					
50					
55					

CH2MHILL	PROJECT NUMBER 439611.01.RI	BORING NUMBER HPDTA-BG-MW04	SHEET 1 OF 2

SOIL BORING LOG

PROJECT :	Towers Road Disposal Area Phase I RI	DRILLING CONTRACTOR AND DRILLER :	Parratt Wolff/J. Ellingworth, J. Terry
LOCATION/SITE :	HPDTA Hertford, NC/Background	DRILLING METHOD AND EQUIPMENT USED :	IRA300, HAS 4.25" ID, 4' Macrocore Sampler
DATE :	6/19/2013	WATER LEVEL :	5.3' bgs
START TIME :	0800	GROUND SURFACE CONDITIONS :	Grass Cover
END TIME :	0840	LOGGER :	T. Stewart/VBO

DEPTH (FT)	SAMPLE INTERVAL (FT)	SAMPLE RECORVERY (FT)	SAMPLE COLLECTION TIME	SOIL DESCRIPTION SOIL NAME, USCS GROUP SYMBOL, COLOR, MOISTURE CONTENT, RELATIVE DENSITY, OR CONSISTENCY, SOIL STRUCTURE, MINERALOGY	COMMENTS DEPTH OF CASING, DRILLING RATE, DRILLING FLUID LOSS, TESTS, AND INSTRUMENTATION. PID (ppm)
	0-4	4.0/4.0	NOT SAMPLED (NS)	0.0-0.3: Topsoil 0.3-2.3: Silty SAND w/ clay (SM) light gray (7.5YR 7/1) w/ brownish yellow mottling, dry, dense, non to low plastic fines, trace roots, high silt content, very fine to fine grain sands 2.3-4.0: SILT (ML)-silty SAND (SM) light gray to pale brown (10YR 6/3), moist, non to low plasticity fines, high silt content, very fine to fine	1.7 3.3
5	4-8	4.0/4.0	NS	4.0-5.3: SILT (ML)-silty SAND (SM) light gray (7.5YR 7/1) to pale brown (10YR 6/3), moist, non to low plasticity fines, high silt content, very fine to fine grain sands 5.3-8.0: Silty SAND (SM) pale brown (10YR 6/3) w/light gray mottling, low plasticity, wet at 5.3' bgs, very fine to fine grain sands, tight pore	0.2 0.2
10	8-12	4.0/4.0	NS	8.0-8.8: Silty SAND (SM) pale brown (10YR 6/3) w/light gray mottling, low plasticity, wet at 5.3' bgs, very fine to fine grain sands, tight pore 8.8-11.2: CLAY w/sand (CL) pale brown (10YR 6/3) w/light gray mottling, moist, abundant medium to coarse grain black organics, medium to high plasticity, fine to medium sands 11.2-12.0: Silty SAND (SM) light yellowish brown (2.5Y 6/3), wet, low plasticity fines, discolored strong brown from 11.5-11.7' bgs, coarse to medium sands	0.2 0.2
15	12-16	4.0/4.0	NS	12.0-16.0: Silty SAND (SM) light yellowish brown (2.5Y 6/3), wet, low plasticity fines, coarse to medium sands	0.6 0.5
20	16-20	4.0/4.0	NS	16.0-20.0: Silty SAND (SM) light yellowish brown (2.5Y 6/3) from 16-17' bgs and light gray (2.5Y 7/2) from 17-20' bgs w/strong brown mottling, coarse sands	0.7 0.3
	20-24	4.0/4.0	NS	20.0-24.0: Silty SAND (SM) light gray (2.5Y 7/2) w/strong brown mottling, coarse sands	1.2 0.6
25	24-28	4.0/4.0	NS	24.0-26.0: Silty SAND (SM) light gray (2.5Y 7/2) w/strong brown mottling, coarse sands 26.0-26.4: CLAY (CL) w/sand light brownish gray (10YR 6/2), moist to wet, medium to high plasticity, stiff, medium grain sands, laminated strong brown sections throughout 26.4-28.0: Silty SAND (SM)-well graded sand (SW) pale brown-yellow (2.5Y 5/4-6), wet, loose to very loose, discolored strong brown section	0.7 0.5
30				End Boring at 28' bgs	

CH2MHILL	PROJECT NUMBER	BORING NUMBER	SHEET 2 OF 2
	439611.01.RI	HPDTA-BG-MW04	

SOIL BORING LOG

PROJECT :	Towers Road Disposal Area Phase I RI	DRILLING CONTRACTOR AND DRILLER :	Parratt Wolff/J. Ellingworth, J. Terry
LOCATION/SITE :	HPDTA Hertford, NC/Background	DRILLING METHOD AND EQUIPMENT USED :	IRA300, HAS 4.25" ID, 4' Macrocore Sampler
DATE :	6/19/2013	WATER LEVEL :	5.3' bgs
START TIME :	0800	GROUND SURFACE CONDITIONS :	Grass Cover
END TIME :	0840	LOGGER :	T. Stewart/VBO

DEPTH (FT)	SAMPLE INTERVAL (FT)	SAMPLE RECORVERY (FT)	SAMPLE COLLECTION TIME	SOIL DESCRIPTION SOIL NAME, USCS GROUP SYMBOL, COLOR, MOISTURE CONTENT, RELATIVE DENSITY, OR CONSISTENCY, SOIL STRUCTURE, MINERALOGY	COMMENTS DEPTH OF CASING, DRILLING RATE, DRILLING FLUID LOSS, TESTS, AND INSTRUMENTATION. PID (ppm)
35					
40					
45					
50					
55					

CH2MHILL	PROJECT NUMBER	BORING NUMBER	SHEET 1 OF 1
	439611.01.RI	HPDTA-BG-SB05	

SOIL BORING LOG

PROJECT :	Towers Road Disposal Area Phase I RI	DRILLING CONTRACTOR AND DRILLER :	Parratt Wolff/J. Ellingworth, J. Terry
LOCATION/SITE :	HPDTA Hertford, NC/Background	DRILLING METHOD AND EQUIPMENT USED :	IRA300, HAS 4.25" ID, 4' Macrocore Sampler
DATE :	6/18/2013	WATER LEVEL :	9' bgs
START TIME :	1400	GROUND SURFACE CONDITIONS :	Grass Cover
END TIME :	1430	LOGGER :	T. Stewart/VBO

DEPTH (FT)	SAMPLE INTERVAL (FT)	SAMPLE RECORVERY (FT)	SAMPLE COLLECTION TIME	SOIL DESCRIPTION SOIL NAME, USCS GROUP SYMBOL, COLOR, MOISTURE CONTENT, RELATIVE DENSITY, OR CONSISTENCY, SOIL STRUCTURE, MINERALOGY	COMMENTS DEPTH OF CASING, DRILLING RATE, DRILLING FLUID LOSS, TESTS, AND INSTRUMENTATION. PID (ppm)
	0-4	4.0/4.0	1410	0.0-0.2: Silty SAND (SM), brownish gray, dry, very loose, roots, non- 0.2-1.5: Silty sand (SM), light brownish gray-pale brown (10YR6/2), dry to moist, fine to medium grain, loose to medium dense, low to non-plastic fines, trace roots, trace coarse sand fraction 1.5-4.0: Well graded SAND to silty SAND (SW-SM), pale brown (2.5Y 8/2), dry, very loose, angular-sub angular, fine-medium grain, clear to translucent, very low silt percentage, non-plastic	0.7 2.7
5	4-8	4.0/4.0	1420	4.0-8.0: Well graded SAND to silty SAND (SW-SM), pale brown (2.5Y 8/2), dry, very loose, angular-sub angular, fine-medium grain, clear to translucent, very low silt percentage, non-plastic	2.1 2.7
10	8-12	4.0/4.0	NS	8.0-9.0: Well graded SAND to silty SAND (SW-SM), pale brown (2.5Y 8/2), dry, very loose, angular-sub angular, fine-medium grain, clear to translucent, very low silt percentage, non-plastic, grades to light 9.0-9.9: Silty sand-poorly graded sand (SM-SP), wet @ 9' bgs, pale brown (2.5Y 8/2), very loose-loose, very coarse-coarse grain 9.9-10.8: CLAY w/silt and sand (CL), light olive brown (2.5Y 5/3), wet, stiff, non-plastic, cohesive, trace light greenish gray mottling 10.8-12.0: Silty SAND (SM), very pale brown-yellow (10YR 7/4), wet,	2.3 1.8
15				medium dense, non-plastic End of Boring at 12' bgs	
20					
25					
30					

PROJECT NUMBER	BORING NUMBER	
439611.01.RI	TR-2ND-SB03	SHEET 1 OF 1

SOIL BORING LOG

PROJECT :	Towers Road Disposal Area Phase I RI	DRILLING CONTRACTOR AND DRILLER :	Parratt Wolff/J. Ellingworth, J. Terry
LOCATION/SITE :	HPDTA Hertford, NC/Background	DRILLING METHOD AND EQUIPMENT USED :	IRA300, HAS 4.25" ID, 4' Macrocore Sampler
DATE :	6/19/2013	WATER LEVEL :	6' bgs
START TIME :	1400	GROUND SURFACE CONDITIONS :	Grass Cover
END TIME :	1410	LOGGER :	T. Stewart/VBO

DEPTH (FT)	SAMPLE INTERVAL (FT)	SAMPLE RECORVERY (FT)	SAMPLE COLLECTION TIME	SOIL DESCRIPTION SOIL NAME, USCS GROUP SYMBOL, COLOR, MOISTURE CONTENT, RELATIVE DENSITY, OR CONSISTENCY, SOIL STRUCTURE, MINERALOGY	COMMENTS DEPTH OF CASING, DRILLING RATE, DRILLING FLUID LOSS, TESTS, AND INSTRUMENTATION. PID (ppm)
	0-4	4.0/4.0	1400	0.0-1.3:Silt-silty SAND (ML-SM), pale brown, moist, black silty, glass debris, trace roots 1.3-4.0: SILT/silty SAND (ML-SM), pale brown, moist	0.4 1.8
5	4-8	4.0/4.0	1410	4.0-8.0:SILT/silty SAND (ML-SM), pale brown, wet at 6' bgs	2.5 2.1
10				End of Boring at 8' bgs	
15					
20					
25					
30					

PROJECT NUMBER	BORING NUMBER	
439611.01.RI	TR-2ND-SB04	SHEET 1 OF 1

SOIL BORING LOG

PROJECT :	Towers Road Disposal Area Phase I RI	DRILLING CONTRACTOR AND DRILLER :	Parratt Wolff/J. Ellingworth, J. Terry
LOCATION/SITE :	HPDTA Hertford, NC/Background	DRILLING METHOD AND EQUIPMENT USED :	IRA300, HAS 4.25" ID, 4' Macrocore Sampler
DATE :	6/19/2013	WATER LEVEL :	5' bgs
START TIME :	1245	GROUND SURFACE CONDITIONS :	Grass Cover
END TIME :	1300	LOGGER :	T. Stewart/VBO

DEPTH (FT)	SAMPLE INTERVAL (FT)	SAMPLE RECORVERY (FT)	SAMPLE COLLECTION TIME	SOIL DESCRIPTION SOIL NAME, USCS GROUP SYMBOL, COLOR, MOISTURE CONTENT, RELATIVE DENSITY, OR CONSISTENCY, SOIL STRUCTURE, MINERALOGY	COMMENTS DEPTH OF CASING, DRILLING RATE, DRILLING FLUID LOSS, TESTS, AND INSTRUMENTATION. PID (ppm)
	0-4	4.0/4.0	1250	0.0-0.2:Mulch/grass 0.2-4.0: Silty SAND (SM), brownish black, reddish brown, moist, fine-medium grain sands, low plasticity	0.2 0.2
5	4-8	4.0/4.0	1300	4.0-8.0: Silty SAND (SM), brownish black, reddish brown, moist, fine-medium grain sands, low plasticity	0.6 0.6
10				End of Boring at 8' bgs	
15					
20					
25					
30					

CH2MHILL	PROJECT NUMBER	BORING NUMBER	SHEET 1 OF 1
	439611.01.RI	TR-2ND-SB05	

SOIL BORING LOG

PROJECT :	Towers Road Disposal Area Phase I RI	DRILLING CONTRACTOR AND DRILLER :	Parratt Wolff/J. Ellingworth, J. Terry
LOCATION/SITE :	HPDTA Hertford, NC/Background	DRILLING METHOD AND EQUIPMENT USED :	IRA300, HAS 4.25" ID, 4' Macrocore Sampler
DATE :	6/19/2013	WATER LEVEL :	5.1' bgs
START TIME :	1330	GROUND SURFACE CONDITIONS :	Grass Cover
END TIME :	1355	LOGGER :	T. Stewart/VBO

DEPTH (FT)	SAMPLE INTERVAL (FT)	SAMPLE RECORVERY (FT)	SAMPLE COLLECTION TIME	SOIL DESCRIPTION SOIL NAME, USCS GROUP SYMBOL, COLOR, MOISTURE CONTENT, RELATIVE DENSITY, OR CONSISTENCY, SOIL STRUCTURE, MINERALOGY	COMMENTS DEPTH OF CASING, DRILLING RATE, DRILLING FLUID LOSS, TESTS, AND INSTRUMENTATION. PID (ppm)
	0-4	4.0/4.0	1330	0.0-4.0: Silty SAND w/gravel (SM), black, moist, roots, loose-medium dense, medium sand, coarse to granular debris gravel including burnt	0.0 0.2
5	4-8	4.0/4.0	1340	4.0-5.0: SILT w/sand (ML), light olive brown, moist, soft/loose, very fine-fine grain black sand, black staining 5.0-8.0: CLAY w/silt and sand (CL), pale brown, wet at 5.1' bgs, very tight pore spaces, stiff, non-low plasticity, slightly cohesive, very fine	1.0 1.2
10				End of Boring at 8' bgs	
15					
20					
25					
30					

CH2MHILL	PROJECT NUMBER	BORING NUMBER	SHEET 1 OF 1
	439611.01.RI	TR-2ND-SB06	

SOIL BORING LOG

PROJECT :	Towers Road Disposal Area Phase I RI	DRILLING CONTRACTOR AND DRILLER :	Parratt Wolff/J. Ellingworth, J. Terry
LOCATION/SITE :	HPDTA Hertford, NC/Background	DRILLING METHOD AND EQUIPMENT USED :	IRA300, HAS 4.25" ID, 4' Macrocore Sampler
DATE :	6/19/2013	WATER LEVEL :	7.2' bgs
START TIME :	1115	GROUND SURFACE CONDITIONS :	Grass Cover (Test Pit 60)
END TIME :	1135	LOGGER :	T. Stewart/VBO

DEPTH (FT)	SAMPLE INTERVAL (FT)	SAMPLE RECORVERY (FT)	SAMPLE COLLECTION TIME	SOIL DESCRIPTION SOIL NAME, USCS GROUP SYMBOL, COLOR, MOISTURE CONTENT, RELATIVE DENSITY, OR CONSISTENCY, SOIL STRUCTURE, MINERALOGY	COMMENTS DEPTH OF CASING, DRILLING RATE, DRILLING FLUID LOSS, TESTS, AND INSTRUMENTATION. PID (ppm)
	0-4	4.0/4.0	1120	0.0-0.9: Silty SAND w/gravel (SM), brownish black, dark greenish gray, and light gray, gravel is roadbase, trace coarse granules of glass 0.9-4.0: clay w/silts and sand (CL), brown and yellowish brown, dry-moist, stiff, high silt content, very fine-fine grain sands, mottled 30% strong brown throughout	0.5 0.0
5	4-8	4.0/4.0	1130	4.0-8.0: Silt-silty SAND (ML-SM), pale brown grading to greenish gray (Gley 1 6/10GY), wet at 7.2' bgs, very fine grain sands, tight pore spaces, non-low plastic fines	0.7 0.6
10				End of Boring at 8' bgs	
15					
20					
25					
30					

CH2MHILL	PROJECT NUMBER 439611.01.RI	BORING NUMBER TR-2ND-SB07	SHEET 1 OF 1

SOIL BORING LOG

PROJECT :	Towers Road Disposal Area Phase I RI	DRILLING CONTRACTOR AND DRILLER :	Parratt Wolff/J. Ellingworth, J. Terry
LOCATION/SITE :	HPDTA Hertford, NC/Background	DRILLING METHOD AND EQUIPMENT USED :	IRA300, HAS 4.25" ID, 4' Macrocore Sampler
DATE :	6/19/2013	WATER LEVEL :	6' bgs
START TIME :	0920	GROUND SURFACE CONDITIONS :	Grass Cover
END TIME :	0940	LOGGER :	T. Stewart/VBO

DEPTH (FT)	SAMPLE INTERVAL (FT)	SAMPLE RECORVERY (FT)	SAMPLE COLLECTION TIME	SOIL DESCRIPTION SOIL NAME, USCS GROUP SYMBOL, COLOR, MOISTURE CONTENT, RELATIVE DENSITY, OR CONSISTENCY, SOIL STRUCTURE, MINERALOGY	COMMENTS DEPTH OF CASING, DRILLING RATE, DRILLING FLUID LOSS, TESTS, AND INSTRUMENTATION. PID (ppm)
	0-4	4.0/4.0	0920	0.0-0.2: 0.2-3.0: Silty SAND (SM), light gray and light brownish yellow mottled, moist-dry, dense, very fine-fine grain sand, low plastic fines, 10% strong brown mottling 3.0-4.0: Silt-silty SAND (ML-SM), light greenish gray and pale brown (Gley 1 7/5GY & 2.5Y 7/3), wet at 6' bgs, very fine grain sands	0.2 0.2
5	4-8	4.0/4.0	0940	4.0-8.0: Silt-silty SAND (ML-SM), light greenish gray and pale brown (Gley 1 7/5GY & 2.5Y 7/3), wet at 6' bgs, very fine grain sands	0.5 0.5
10	8-12	4.0/4.0	NS	8.0-9.6: Silt-silty SAND (ML-SM), light greenish gray and pale brown (Gley 1 7/5GY & 2.5Y 7/3), wet at 6' bgs, very fine grain sands, high silt 9.6-12.0: Silty sand (SM), greenish gray (gley 1 5G 6/1), wet, medium dense, very fine-fine grain sands, low plastic fines, tight pore spaces, trace strong brown mottling throughout, trace black laminations	0.2 0.3
15				End of Boring at 12' bgs	
20					
25					
30					

PROJECT NUMBER	BORING NUMBER	
439611.01.RI	TR-5TH-SB03	SHEET 1 OF 1

SOIL BORING LOG

PROJECT :	Towers Road Disposal Area Phase I RI	DRILLING CONTRACTOR AND DRILLER :	Parratt Wolff/J. Ellingworth, J. Terry
LOCATION/SITE :	HPDTA Hertford, NC/Background	DRILLING METHOD AND EQUIPMENT USED :	IRA300, HAS 4.25" ID, 4' Macrocore Sampler
DATE :	6/17/2013	WATER LEVEL :	4' bgs
START TIME :	1115	GROUND SURFACE CONDITIONS :	Grass Cover
END TIME :	1245	LOGGER :	T. Stewart/VBO

DEPTH (FT)	SAMPLE INTERVAL (FT)	SAMPLE RECORVERY (FT)	SAMPLE COLLECTION TIME	SOIL DESCRIPTION SOIL NAME, USCS GROUP SYMBOL, COLOR, MOISTURE CONTENT, RELATIVE DENSITY, OR CONSISTENCY, SOIL STRUCTURE, MINERALOGY	COMMENTS DEPTH OF CASING, DRILLING RATE, DRILLING FLUID LOSS, TESTS, AND INSTRUMENTATION. PID (ppm)
	0-4	2.0/4.0	1125	0.0-1.2: Silty SAND w/gravel (SM-GM), gravel is glass shards, flecks of wood and debris, brown processed wood, pale brown (2.5Y 7/3), dry, very dense, fine-medium grain sands, non-plastic, brittle, 15% strong 1.2-2.0: Sandy GRAVEL (GM), very dark gray (5Y 3/1), low plastic, fine-medium grain sands, pebble sized pieces of debris, very soft 2.0-4.0: No Recovery	1.6 1.3
5	4-8	1.3/4.0	1245	4.0-5.3: Silty SAND (SM), greenish gray, red stained wood, fine-medium grain sands, black particles, high silt content, loose, moist, wet 5.3-8.0: No Recovery	2.7 2.9
10				End of Boring at 8' bgs	
15					
20					
25					
30					

PROJECT NUMBER	BORING NUMBER	
439611.01.RI	TR-5TH-SB04	SHEET 1 OF 1

CH2MHILL

SOIL BORING LOG

PROJECT :	Towers Road Disposal Area Phase I RI	DRILLING CONTRACTOR AND DRILLER :	Parratt Wolff/J. Ellingworth, J. Terry
LOCATION/SITE :	HPDTA Hertford, NC/Background	DRILLING METHOD AND EQUIPMENT USED :	IRA300, HAS 4.25" ID, 4' Macrocore Sampler
DATE :	6/17/2013	WATER LEVEL :	6' bgs
START TIME :	1350	GROUND SURFACE CONDITIONS :	Grass Cover
END TIME :	1420	LOGGER :	T. Stewart/VBO

DEPTH (FT)	SAMPLE INTERVAL (FT)	SAMPLE RECORVERY (FT)	SAMPLE COLLECTION TIME	SOIL DESCRIPTION SOIL NAME, USCS GROUP SYMBOL, COLOR, MOISTURE CONTENT, RELATIVE DENSITY, OR CONSISTENCY, SOIL STRUCTURE, MINERALOGY	COMMENTS DEPTH OF CASING, DRILLING RATE, DRILLING FLUID LOSS, TESTS, AND INSTRUMENTATION. PID (ppm)
	0-4	4.0/4.0	1400	0.0-4.0: Silty SAND (SM), brown, dense-medium dense, dry, trace roots, abundant pebble-sized burnt fragments, glass throughout, strong brown mottling, very fine-fine grain sands	1.1 0.8
5	4-8	4.0/4.0	1420	4.0-5.5: Silty SAND (SM), brown, dense-medium dense, dry, trace roots, abundant pebble-sized burnt fragments, glass throughout, strong brown mottling, very fine-fine grain sands 5.5-8.0: Silt w/sand-silty SAND (SM), light gray and brownish yellow mottled, wet at 6' bgs, very moist throughout, tight pore spaces, very high silt content	5.8 4.9
10				End of Boring at 8' bgs	
15					
20					
25					
30					

PROJECT NUMBER	BORING NUMBER	
439611.01.RI	TR-5TH-SB05	SHEET 1 OF 1

SOIL BORING LOG

PROJECT :	Towers Road Disposal Area Phase I RI	DRILLING CONTRACTOR AND DRILLER :	Parratt Wolff/J. Ellingworth, J. Terry
LOCATION/SITE :	HPDTA Hertford, NC/Background	DRILLING METHOD AND EQUIPMENT USED :	IRA300, HAS 4.25" ID, 4' Macrocore Sampler
DATE :	6/18/2013	WATER LEVEL :	4' bgs
START TIME :	0900	GROUND SURFACE CONDITIONS :	Grass Cover
END TIME :	1200	LOGGER :	T. Stewart/VBO

DEPTH (FT)	SAMPLE INTERVAL (FT)	SAMPLE RECORVERY (FT)	SAMPLE COLLECTION TIME	SOIL DESCRIPTION SOIL NAME, USCS GROUP SYMBOL, COLOR, MOISTURE CONTENT, RELATIVE DENSITY, OR CONSISTENCY, SOIL STRUCTURE, MINERALOGY	COMMENTS DEPTH OF CASING, DRILLING RATE, DRILLING FLUID LOSS, TESTS, AND INSTRUMENTATION. PID (ppm)
	0-4	4.0/4.0	0900	0.0-0.3: Topsoil 0.3-2.0: Silty SAND w/gravel (SM), pale brown to light gray, dry, non-plastic, medium dense-dense, very fine-fine grain sands, up to 15% pebble-sized burnt particles throughout, rubber cores recovered from 2.0-4.0: No Recovery	0.4 0.4
5	4-8	4.0/4.0	1200	4.0-8.0: Silty SAND (SM), greenish gray, wet, fine-medium grain sand, non-low plastic fines, loose	0.8 0.9
10				End of Boring at 8' bgs	
15					
20					
25					
30					

PROJECT NUMBER	BORING NUMBER	
439611.01.RI	TR-5TH-SB06	SHEET 1 OF 1

SOIL BORING LOG

PROJECT :	Towers Road Disposal Area Phase I RI	DRILLING CONTRACTOR AND DRILLER :	Parratt Wolff/J. Ellingworth, J. Terry
LOCATION/SITE :	HPDTA Hertford, NC/Background	DRILLING METHOD AND EQUIPMENT USED :	IRA300, HAS 4.25" ID, 4' Macrocore Sampler
DATE :	6/18/2013	WATER LEVEL :	6' bgs
START TIME :	1200	GROUND SURFACE CONDITIONS :	Grass Cover
END TIME :	1215	LOGGER :	T. Stewart/VBO

DEPTH (FT)	SAMPLE INTERVAL (FT)	SAMPLE RECORVERY (FT)	SAMPLE COLLECTION TIME	SOIL DESCRIPTION SOIL NAME, USCS GROUP SYMBOL, COLOR, MOISTURE CONTENT, RELATIVE DENSITY, OR CONSISTENCY, SOIL STRUCTURE, MINERALOGY	COMMENTS DEPTH OF CASING, DRILLING RATE, DRILLING FLUID LOSS, TESTS, AND INSTRUMENTATION. PID (ppm)
	0-4	4.0/4.0	1210	0.0-4.0: Silty SAND (SM), dark gray-dark grayish brown, dry-moist	1.2 2.1
5	4-8	4.0/4.0	1220	4.0-5.5: CLAY w/sand (CL)/sandy clay (CL), dark greenish gray, moist, plastic, stiff 5.5-8.0: SILT w/sand-silty sand (M-SM), dark greenish gray and greenish gray, wet at 6' bgs, non-plastic, loose, very fine-fine grain sands, mottled yellowish brown	1.5 1.3
10				End of Boring at 8' bgs	
15					
20					
25					
30					

PROJECT NUMBER	WELL NUMBER	
439611.01.RI	TR-2ND-MW01	SHEET 1 OF 1

WELL COMPLETION DIAGRAM

PROJECT : Towers Road Disposal Area LOCATION : HPDTA, Hertford NC DATE: 6/11/2013

DRILLING CONTRACTOR : Parratt Wolff/ J. Ellingworth

DRILLING METHOD AND EQUIPMENT USED : 4.25" Hollow Stem Auger/Truck Mounted Drill Rig (IRA-300)

WATER LEVEL : 5.10' Below Top of Casing (BTOC) NORTHING: 867530.12 EASTING: 2787183.62 LOGGER: T. Stewart/VBO

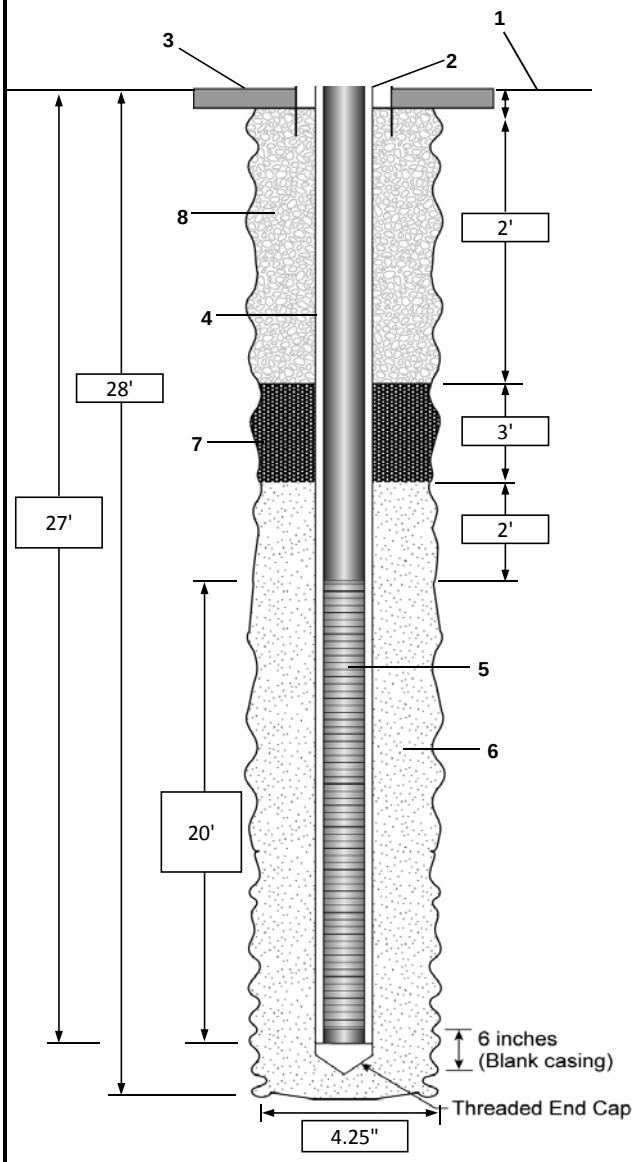

1- Ground elevation at well	6.29' above mean sea level (amsl)
2- Top of casing elevation	6.14' amsl
3- Wellhead protection cover type	8" Flushmount
a) concrete pad dimensions	24" Diameter Circle
4- Dia./type of well casing	2" Diameter PVC
5- Screen slot size	0.010" Machine Slotted
6- Type filter pack	#1 Sand
a) Quantity used	12 50-lb Bags
7- Type of seal	Sodiume Bentonite
a) Quantity used	1 50-lb Bag
8- Grout	
a) Grout mix used	Portland Cement
b) Method of placement	Tremie Pipe
Development method	Surge and Pump

Comments:

Purged 48 gallons of water during development.

PROJECT NUMBER	WELL NUMBER	
439611.01.RI	TR-2ND-MW02	SHEET 1 OF 1

WELL COMPLETION DIAGRAM

PROJECT : Towers Road Disposal Area LOCATION : HPDTA, Hertford NC DATE: 6/11/2013

DRILLING CONTRACTOR : Parratt Wolff/ J. Ellingworth

DRILLING METHOD AND EQUIPMENT USED : 4.25" Hollow Stem Auger/Truck Mounted Drill Rig (IRA-300)

WATER LEVEL : 4.66' BTOC NORTHING: 867497.18 EASTING: 2787097.60 LOGGER : T. Stewart/VBO

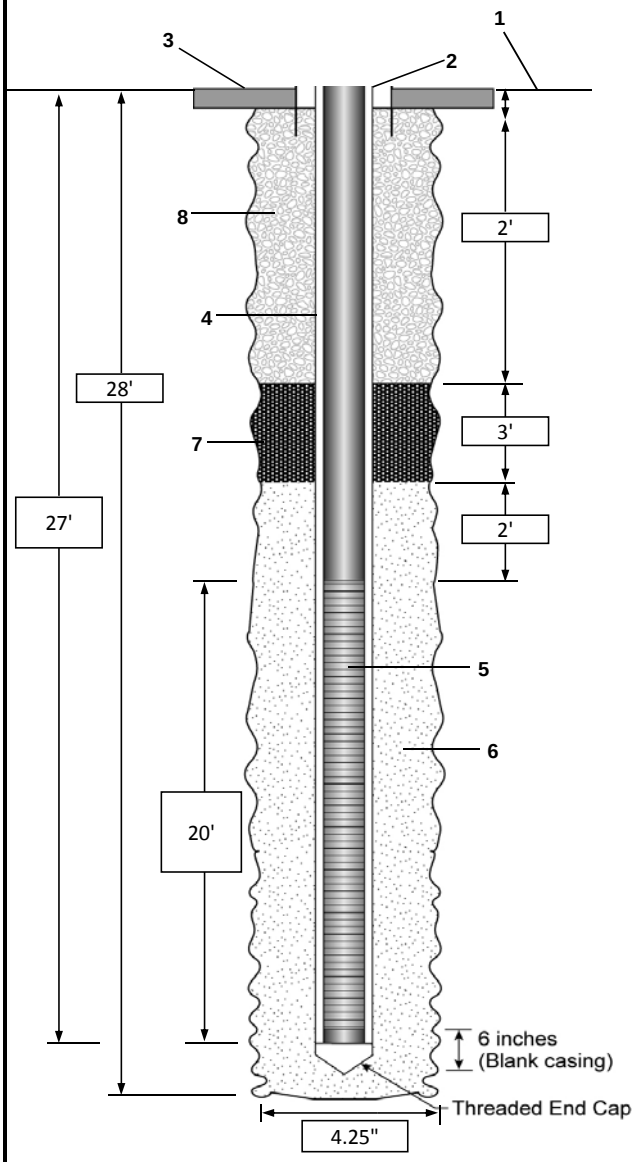

1- Ground elevation at well	6.06' amsl
2- Top of casing elevation	5.76' amsl
3- Wellhead protection cover type	8" Flushmount
a) concrete pad dimensions	24" Diameter Circle
4- Dia./type of well casing	2" Diameter PVC
5- Screen slot size	0.010" Machine Slotted
6- Type filter pack	#1 Sand
a) Quantity used	12 50-lb Bags
7- Type of seal	Sodiume Bentonite
a) Quantity used	1 50-lb Bag
8- Grout	
a) Grout mix used	Portland Cement
b) Method of placement	Tremie Pipe
Development method	Surge and Pump

Comments:

Purged 42 gallons of water during development.

PROJECT NUMBER	WELL NUMBER	
439611.01.RI	TR-5TH-MW01	SHEET 1 OF 1

WELL COMPLETION DIAGRAM

PROJECT : Towers Road Disposal Area LOCATION : HPDTA, Hertford NC DATE: 6/12/2013

DRILLING CONTRACTOR : Parratt Wolff/ J. Ellingworth

DRILLING METHOD AND EQUIPMENT USED : 4.25" Hollow Stem Auger/Truck Mounted Drill Rig (IRA-300)

WATER LEVEL : 5.42' BTOC NORTHING: 867102.48 EASTING: 2788448.03 LOGGER : T. Stewart/VBO

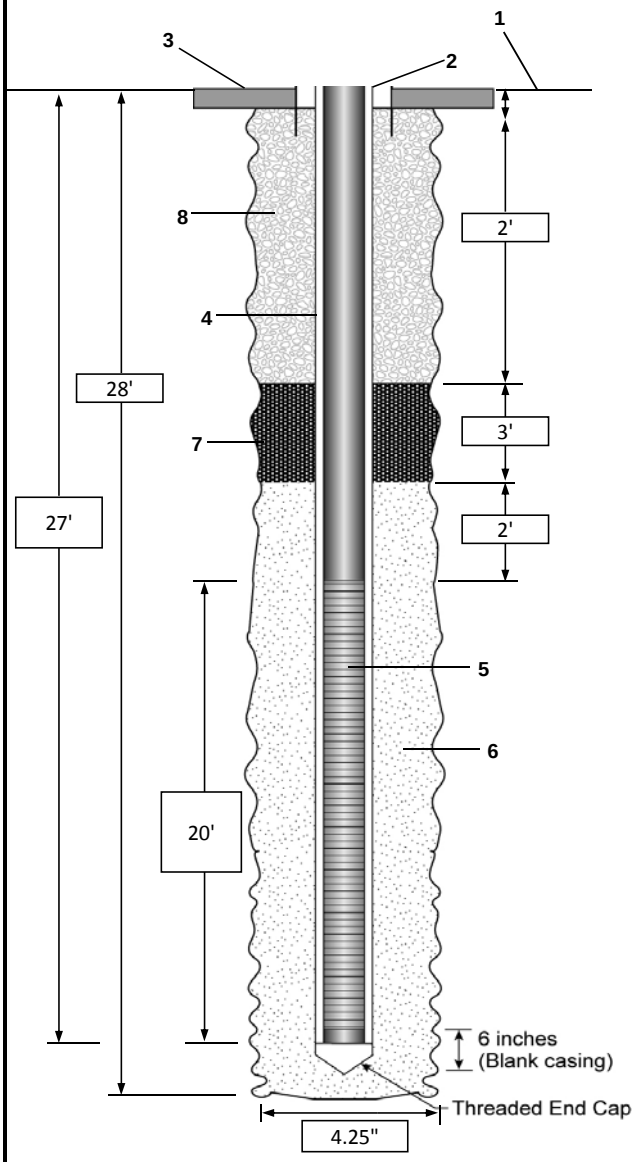

1- Ground elevation at well	6.94' amsl
2- Top of casing elevation	6.78' amsl
3- Wellhead protection cover type	8" Flushmount
a) concrete pad dimensions	24" Diameter Circle
4- Dia./type of well casing	2" Diameter PVC
5- Screen slot size	0.010" Machine Slotted
6- Type filter pack	#1 Sand
a) Quantity used	12 50-lb Bags
7- Type of seal	Sodiume Bentonite
a) Quantity used	1 50-lb Bag
8- Grout	
a) Grout mix used	Portland Cement
b) Method of placement	Tremie Pipe
Development method	Surge and Pump

Comments:

Purged 55 gallons of water during development.

PROJECT NUMBER	WELL NUMBER	
439611.01.RI	TR-5TH-MW02	SHEET 1 OF 1

WELL COMPLETION DIAGRAM

PROJECT : Towers Road Disposal Area LOCATION : HPDTA, Hertford NC DATE: 6/13/2013

DRILLING CONTRACTOR : Parratt Wolff/ J. Ellingworth

DRILLING METHOD AND EQUIPMENT USED : 4.25" Hollow Stem Auger/Truck Mounted Drill Rig (IRA-300)

WATER LEVEL : 7.42' BTOC NORTHING: 867188.16 EASTING: 2788358.28 LOGGER : T. Stewart/VBO

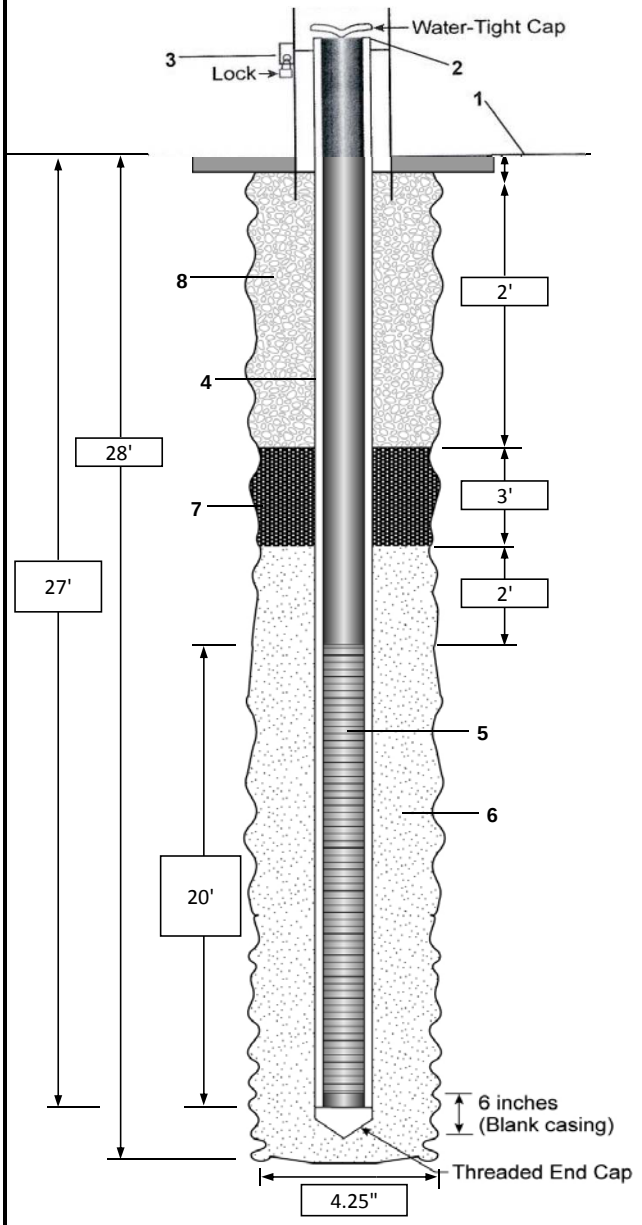

1- Ground elevation at well	6.01' amsl
2- Top of casing elevation	8.87' amsl
3- Wellhead protection cover type	Steel Stickup
a) concrete pad dimensions	24" Diameter Circle
4- Dia./type of well casing	2" Diameter PVC
5- Screen slot size	0.010" Machine Slotted
6- Type filter pack	#1 Sand
a) Quantity used	12 50-lb Bags
7- Type of seal	Sodiume Bentonite
a) Quantity used	1 50-lb Bag
8- Grout	
a) Grout mix used	Portland Cement
b) Method of placement	Tremie Pipe
c) Volume	
Development method	Surge and Pump

Comments:

Purged 30 gallons of water during development.

PROJECT NUMBER	WELL NUMBER	
439611.01.RI	HPDTA-BG-MW01	SHEET 1 OF 1

WELL COMPLETION DIAGRAM

PROJECT : Towers Road Disposal Area LOCATION : HPDTA, Hertford NC DATE: 6/12/2013

DRILLING CONTRACTOR : Parratt Wolff/ J. Ellingworth

DRILLING METHOD AND EQUIPMENT USED : 4.25" Hollow Stem Auger/Truck Mounted Drill Rig (IRA-300)

WATER LEVEL : 5.34' BTOC NORTHING: 866867.00 EASTING: 2788309.60 LOGGER : T. Stewart/VBO

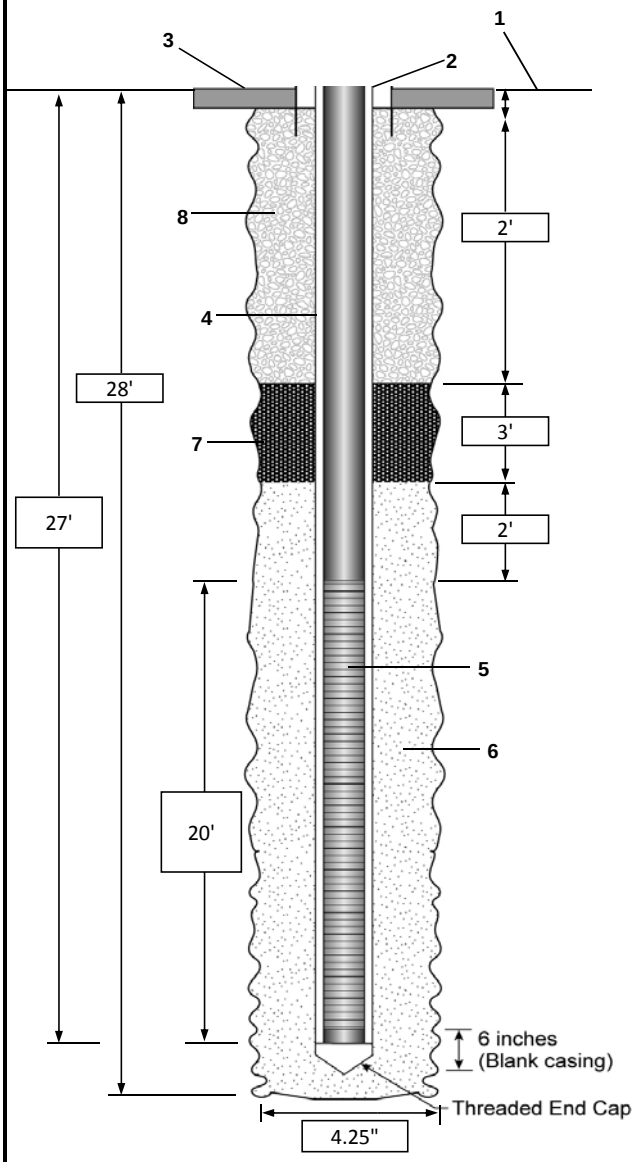

1- Ground elevation at well	6.93' amsl
2- Top of casing elevation	6.62' amsl
3- Wellhead protection cover type	8" Flushmount
a) concrete pad dimensions	24" Diameter Circle
4- Dia./type of well casing	2" Diameter PVC
5- Screen slot size	0.010" Machine Slotted
6- Type filter pack	#1 Sand
a) Quantity used	12 50-lb Bags
7- Type of seal	Sodiume Bentonite
a) Quantity used	1 50-lb Bag
8- Grout	
a) Grout mix used	Portland Cement
b) Method of placement	Tremie Pipe
Development method	Surge and Pump

Comments:

Purged 60 gallons of water during development.

PROJECT NUMBER	WELL NUMBER	
439611.01.RI	HPDTA-BG-MW02	SHEET 1 OF 1

WELL COMPLETION DIAGRAM

PROJECT : Towers Road Disposal Area LOCATION : HPDTA, Hertford NC DATE: 6/13/2013

DRILLING CONTRACTOR : Parratt Wolff/ J. Ellingworth

DRILLING METHOD AND EQUIPMENT USED : 4.25" Hollow Stem Auger/Truck Mounted Drill Rig (IRA-300)

WATER LEVEL : 4.83' BTOC NORTHING: 867840.11 EASTING: 2787247.22 LOGGER : T. Stewart/VBO

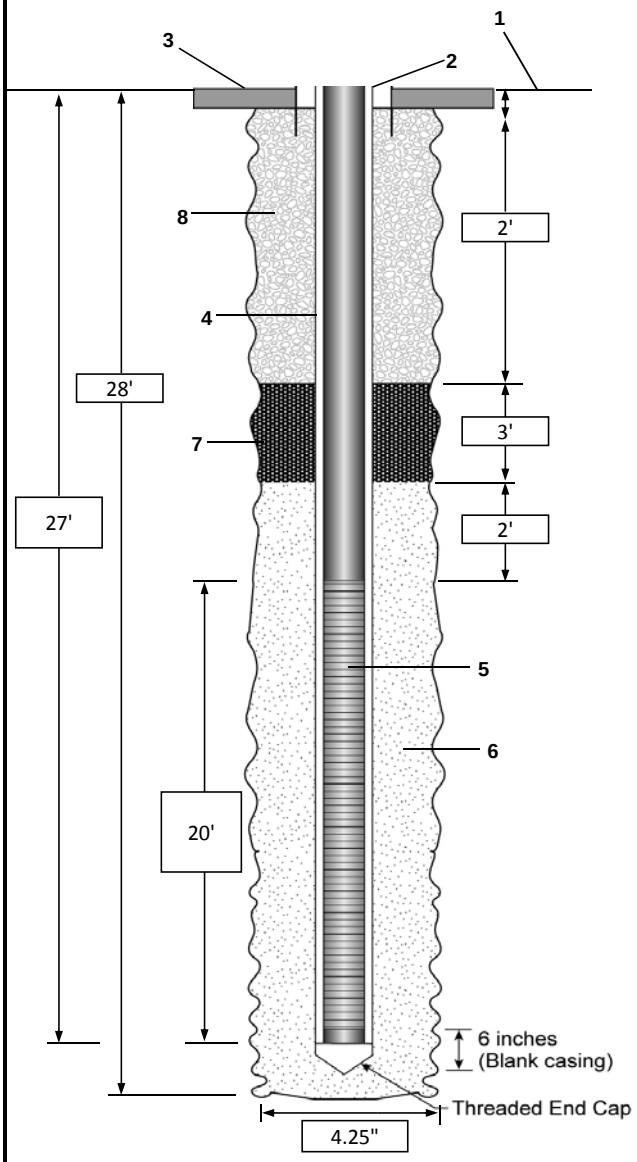

1- Ground elevation at well	6.06' amsl (top of well)
2- Top of casing elevation	5.68' amsl
3- Wellhead protection cover type	8" Flushmount
a) concrete pad dimensions	24" Diameter Circle
4- Dia./type of well casing	2" Diameter PVC
5- Screen slot size	0.010" Machine Slotted
6- Type filter pack	#1 Sand
a) Quantity used	12 50-lb Bags
7- Type of seal	Sodiume Bentonite
a) Quantity used	1 50-lb Bag
8- Grout	
a) Grout mix used	Portland Cement
b) Method of placement	Tremie Pipe
Development method	Surge and Pump

Comments:

Purged 78 gallons of water during development.

PROJECT NUMBER	WELL NUMBER	
439611.01.RI	HPDTA-BG-MW04	SHEET 1 OF 1

WELL COMPLETION DIAGRAM

PROJECT : Towers Road Disposal Area LOCATION : HPDTA, Hertford NC DATE: 6/14/2013

DRILLING CONTRACTOR : Parratt Wolff/ J. Ellingworth

DRILLING METHOD AND EQUIPMENT USED : 4.25" Hollow Stem Auger/Truck Mounted Drill Rig (IRA-300)

WATER LEVEL : 4.82' BTOC NORTHING: 866665.64 EASTING: 2786754.44 LOGGER : T. Stewart/VBO

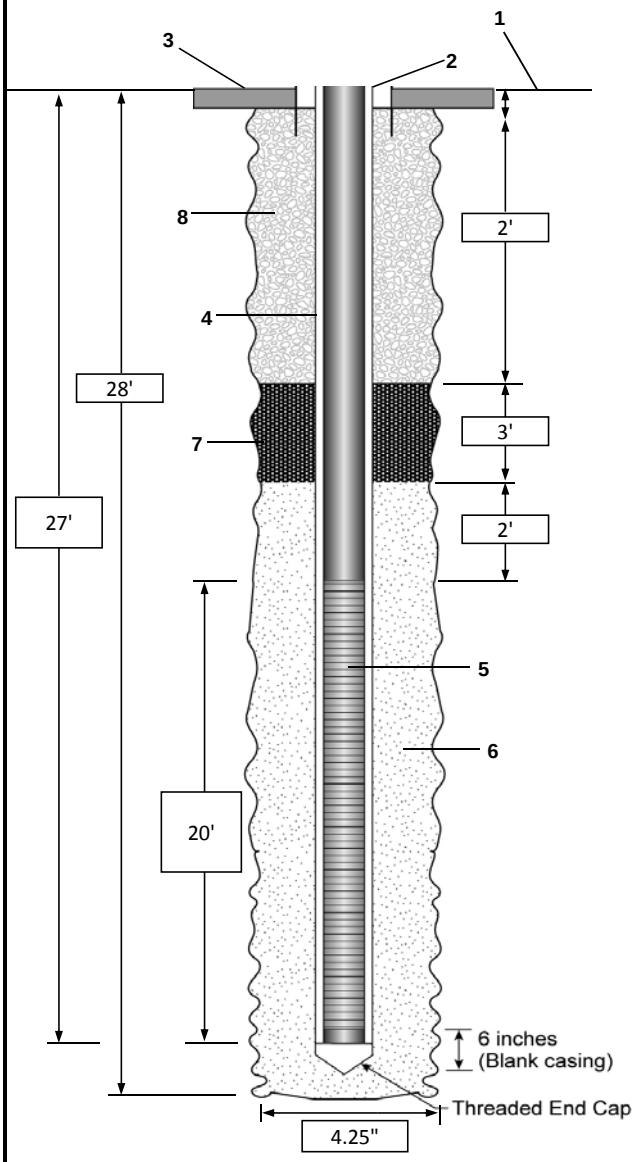

1- Ground elevation at well	6.30' amsl
2- Top of casing elevation	6.08' amsl
3- Wellhead protection cover type	8" Flushmount
a) concrete pad dimensions	24" Diameter Circle
4- Dia./type of well casing	2" Diameter PVC
5- Screen slot size	0.010" Machine Slotted
6- Type filter pack	#1 Sand
a) Quantity used	12 50-lb Bags
7- Type of seal	Sodiume Bentonite
a) Quantity used	1 50-lb Bag
8- Grout	
a) Grout mix used	Portland Cement
b) Method of placement	Tremie Pipe
Development method	Surge and Pump

Comments:

Purged 54 gallons of water during development.

PROJECT NUMBER	WELL NUMBER	
439611.01.RI	HPDTA-BG-MW04	SHEET 1 OF 1

WELL COMPLETION DIAGRAM

PROJECT : Towers Road Disposal Area LOCATION : HPDTA, Hertford NC DATE: 6/14/2013

DRILLING CONTRACTOR : Parratt Wolff/ J. Ellingworth

DRILLING METHOD AND EQUIPMENT USED : 4.25" Hollow Stem Auger/Truck Mounted Drill Rig (IRA-300)

WATER LEVEL : 4.62' BTOC NORTHING: 866381.07 EASTING: 2787624.29 LOGGER : T. Stewart/VBO

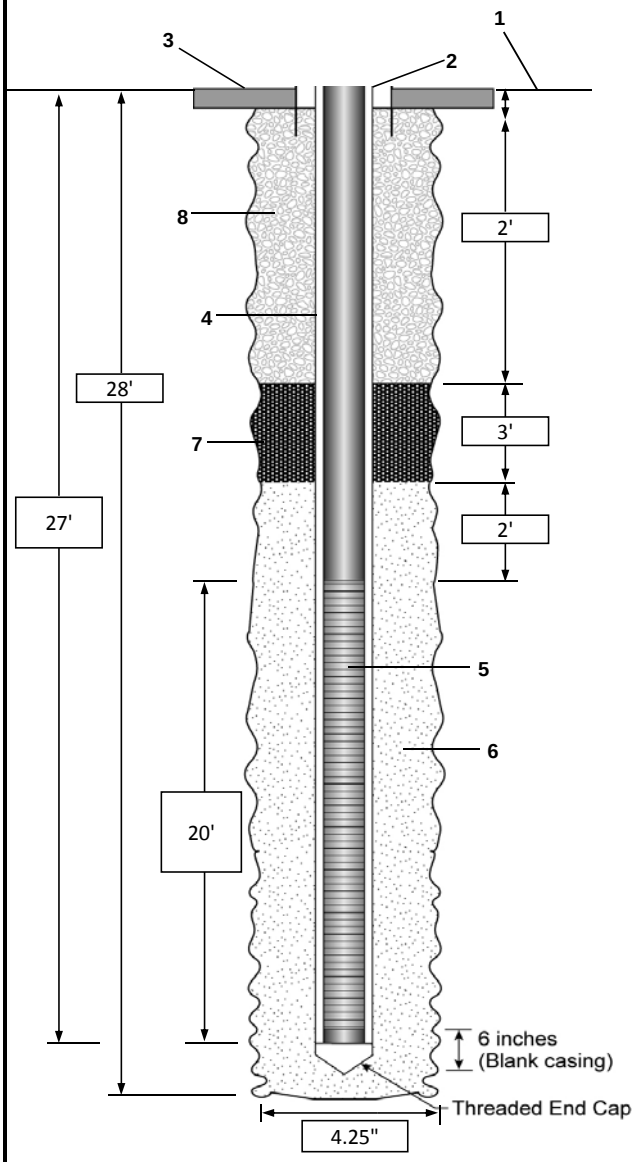

1- Ground elevation at well	6.29' amsl
2- Top of casing elevation	5.92' amsl
3- Wellhead protection cover type	8" Flushmount
a) concrete pad dimensions	24" Diameter Circle
4- Dia./type of well casing	2" Diameter PVC
5- Screen slot size	0.010" Machine Slotted
6- Type filter pack	#1 Sand
a) Quantity used	12 50-lb Bags
7- Type of seal	Sodiume Bentonite
a) Quantity used	1 50-lb Bag
8- Grout	
a) Grout mix used	Portland Cement
b) Method of placement	Tremie Pipe
Development method	Surge and Pump

Comments:

Purged 54 gallons of water during development.