1130IHSSF2074

DocumentID NONCD0002796

Site Name BRENNTAG SOUTHEAST

DocumentType Site Assessment Rpt (SAR)

RptSegment 1

DocDate 7/26/2002

DocRcvd 3/24/2010

Box SF2074

AccessLevel PUBLIC

Division WASTE MANAGEMENT

Section SUPERFUND

Program IHS (IHS)

DocCat FACILITY

ARCADIS

Infrastructure, buildings, environment, communications

RECEIVED
JUL 26 2002
DENR RALEIGH REGIONAL

ARCADIS G&M
of North Carolina, Inc.
P.O. Box 31388
Raleigh, NC 27622-1388
2301 Rexwoods Drive - Suite 102
Raleigh, NC 27607-3366
Tel 919 782 5511
Fax 919 782 5905
www.arcadis-us.com

ENVIRONMENTAL

Mr. Eric Rice
North Carolina Department of Environment and Natural Resources
Raleigh Regional Office
Division of Water Quality, Groundwater Section
3800 Barrett Drive, Suite 101
Raleigh, North Carolina 27609

Subject:
Comprehensive Site Assessment Report, Brenntag Southeast Facility (Former Worth Chemical Facility), 2418 East Pettigrew Street, Durham, North Carolina
Incident #86102

Date:
26 July 2002

Contact:
Jim Shilliday

Phone:
Ext. 246

E-mail:
jshilliday@arcadis-us.com

Our ref:
NC101047.0002

Dear Mr. Rice:

Enclosed is a copy of the Comprehensive Site Assessment Report prepared for the Brenntag Southeast Facility (Former Worth Chemical Facility) located at the above-referenced address. This report documents the results of two phases of soil and groundwater assessment activities that were performed at the site from August through October 2001 (first phase of assessment) and from April through July 2002 (second phase of assessment). The assessment activities included the collection of soil samples from 41 Geoprobe borings and 5 hand auger borings, installation and sampling of 10 shallow Type II and 1 Type III permanent monitor wells, collection of multiple rounds of water level measurements, and performance of insitu aquifer tests. In addition, a potential receptors survey was performed for all properties within 1,500 feet of the site.

If you have any questions regarding the information presented in the report, please contact us at 919.782.5511.

Sincerely,

ARCADIS G&M of North Carolina, Inc.

Daniel M. Tomczak
Staff Scientist/Task Manager

James E. Shilliday, III, L.G.
Senior Scientist/Investigation Services
Department Manager

Copies:
Bruce Biehl—Brenntag Southeast

COMPREHENSIVE SITE ASSESSMENT REPORT

BRENNTAG SOUTHEAST FACILITY
(FORMER WORTH CHEMICAL FACILITY)
2418 EAST PETTIGREW STREET
DURHAM, NORTH CAROLINA

Incident #86102

July 26, 2002

ARCADIS
Infrastructure, buildings, environment, communications

ARCADIS

Daniel M. Tomczak
Staff Scientist/Task Manager

James E. Shilliday, III, L.G.
Senior Scientist/Project Manager

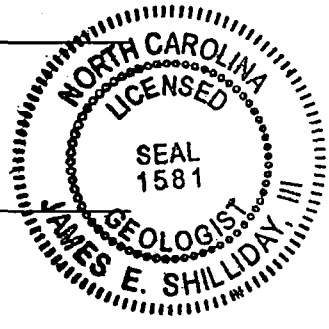

Comprehensive Site Assessment Report

Brenntag Southeast Facility (Former Worth Chemical Facility), 2418 East Pettigrew Street, Durham, North Carolina
Incident #86102

Prepared for:
Brenntag Southeast, Inc.

Prepared by:
ARCADIS G&M of North Carolina, Inc.
2301 Rexwoods Drive
Suite 102
Raleigh
North Carolina 27607
Tel 919 782 5511
Fax 919 782 5905

Our Ref.:
NC101047.0002

Date:
July 26, 2002

This document is intended only for the use of the individual or entity for which it was prepared and may contain information that is privileged, confidential, and exempt from disclosure under applicable law. Any dissemination, distribution, or copying of this document is strictly prohibited.

Table of Contents

1. Introduction 1-1

1.1 Site Background 1-1

1.2 Environmental History 1-2

2. Potential Receptors Survey 2-1

3. Site Assessment Program 3-1

3.1 Soil Investigation 3-1

3.1.1 Soil Sample Collection Using Direct Push Technology 3-1

3.1.2 Soil Sample Collection Using Hand Augers 3-2

3.2 Groundwater Investigation 3-3

3.2.1 Monitor Well Installation 3-3

3.2.2 Monitor Well Development 3-4

3.2.3 Water Level Measurements 3-5

3.2.4 Groundwater Sample Collection 3-5

3.3 Site Survey 3-6

4. Hydrogeology 4-1

4.1 Regional Geology and Hydrogeology 4-1

4.2 Site-Specific Geology 4-2

4.3 Groundwater Flow System 4-4

4.3.1 Groundwater Flow Direction 4-4

4.3.2 Hydraulic Gradients 4-4

4.3.3 Groundwater Flow Velocity 4-4

5. Investigation Results For Soil And Groundwater 5-1

5.1 Soil Sample Analytical Results 5-1

5.2 Identified Areas with Impacted Soil 5-3

5.3 Groundwater Sample Field Parameters and Analytical Results 5-5

5.3.1 Groundwater Parameters 5-5

5.3.2 Groundwater Analytical Results 5-5

5.3.3 Geochemical Indicators of Biodegradation 5-7

6. Data Review And Validation 6-1

6.1 Field Quality Assurance Components 6-1

6.2 Laboratory Quality Assurance Components 6-1

6.2.1 Volatile Organic Compounds (USEPA Method 8260) 6-2

6.2.2 Natural Attenuation Parameter Data 6-3

7. Summary 7-1

7.1 Potential Receptors Survey 7-1

7.2 Site Geology 7-2

7.3 Site Hydrogeology 7-2

7.4 Soil Investigation Results 7-3

7.5 Groundwater Investigation Results 7-3

8. References 8-1

Tables

2-1 Property Owners and Parcel Identification Numbers Within a 1,500 Foot Search Radius

3-1 Summary of Monitor Well Construction Details

4-1 Historical Water-Level Elevations in Monitor Wells, October 12 and 16, 2001 and June 11, 2002

5-1 Summary of Soil Sample Analytical Results, August 22-23, 2001 and April 18-19, 2002 Soil Sampling Events

5-2 Groundwater Field Parameter Data Collected During The June 11 to 12 and July 3, 2002 Sampling Events

5-3 Summary of Groundwater Sample Analytical Results, October 12, 2001 and June 11-12, 2002 Sampling Events

5-4 Summary of Groundwater Natural Attenuation Parameters, June 11-12, 2002 Sampling Event

Figures

1-1 Site Location

1-2 Site Layout

3-1 Soil Boring Locations

3-2 Monitor Well Locations

4-1 Geological Cross-Section A-A'

4-2 Geological Cross Section B-B'

4-3 Groundwater Potentiometric Surface of the Shallow Zone – June 11, 2002

5-1 Tetrachloroethene (PCE) Concentrations (µg/kg) in Soil Samples, August 22-23, 2001 and April 18-19, 2002 Sampling Events

5-2 Trichloroethene (TCE) Concentrations (µg/kg) in Soil Samples, August 22-23, 2001 and April 18-19, 2002 Sampling Events

5-3 Chloroform Concentrations (µg/kg) in Soil Samples, August 22-23, 2001 and April 18-19, 2002 Sampling Events

5-4 Tetrachloroethene (PCE) Isoconcentration (µg/L) Contour Map in Groundwater, June 11-12, 2002

5-5 Trichloroethene (TCE) Isoconcentration (µg/L) Contour Map in Groundwater, June 11-12, 2002

5-6 Chloroform Isoconcentration (µg/L) Contour Map in Groundwater, June 11-12, 2002

Appendices

A Soil Lithologic Logs

B Monitor Well Construction Logs

C Soil Analytical Reports

D Groundwater Analytical Reports

1. Introduction

ARCADIS has prepared this Comprehensive Site Assessment (CSA) Report on behalf of Brenntag Southeast, Inc. (Brenntag). This report documents soil and groundwater assessment activities performed from August through October 2001 (first phase of assessment) and from April through July 2002 (second phase of assessment) at the former Worth Chemical facility, 2418 East Pettigrew Street, Durham, North Carolina. The purpose of the soil and groundwater assessment activities was to evaluate the extent of impacted soil and groundwater associated with the past activities at the former Worth Chemical facility. Information obtained from previous assessment activities (NCDHR, 1989; Aquaterra, 1989; Versar, 1994; ARCADIS, 2002) was used to assist in determining the number and locations of soil sampling points and permanent monitor wells required for delineation of impacts to soil and groundwater at the site. Delineation of impacts to soil and groundwater is necessary in order to satisfy the North Carolina Department of Environment and Natural Resources' (NCDENR) requirements for a Comprehensive Site Assessment (CSA) (NCDENR, 2000). The site location is shown on a topographic map on Figure 1-1, and the site layout is shown on Figure 1-2.

1.1 Site Background

The former Worth Chemical facility has three main buildings that were primarily used as warehouses and storage buildings (Figure 1-2). The north warehouse contained two sections that were used mainly for storage of chemical materials, while the south warehouse contained offices, a loading dock and material storage areas. A smaller storage building on the west side of the site was also used for storage of chemical materials. In addition to the main buildings, the site cover consists of coarse gravel within the parking areas, small concrete pads, railroad tracks, concrete paving between the warehouses, and grass along the southeast portion of the site.

The site originally operated as a prefabricated mobile home manufacturing plant (NCDHR, 1989). Since 1966 various small chemical companies have occupied the facility. From 1966 to 1969 the facility was operated by Cardinal Chemical, followed by Scichemco from 1969 to 1972, then by Amore Chemical from 1972 to 1975, and finally by Worth Chemical beginning in 1975 (Versar, 1994). Worth Chemical operated the facility until September 4, 2001, at which time Brenntag assumed ownership of the facility.

Beginning in 1966, the facility operations primarily consisted of chemical repackaging and/or chemical storage. During the operation by Amore Chemical, the facility was

used for repackaging bulk chemicals and solvent recycling of ethanol and some chlorinated solvents (Aquaterra, 1989). The main products distributed from the Amore Chemical facility included chlorinated solvents, various aromatic compounds, caustic soda, and hydrochloric acid (Versar, 1994). Railcar and tanker trucks were used to transport the chemical materials. Soon after Worth Chemical began operation of the facility in 1975, formulating and drumming of bulk chemicals was stopped and the facility was primarily used as a warehouse and distribution center (Versar, 1994). However, Worth Chemical continued to perform adhesive/cleaner formulation in small batches (165 gallons) on an as needed basis through the mid-1990's using alcohols and methyl ethyl ketone (Aquaterra, 1989 and Versar, 1994).

A solvent recovery distillation unit was in operation at the facility from approximately 1974 (Amore Chemical) to 1981 (Worth Chemical). The solvent recovery operation recovered spent solvents, including ethanol, methanol, tetrachloroethene (PCE) and trichloroethene (TCE), for a battery company (Aquaterra, 1989).

Bulk storage tanks used by Amore Chemical were formerly located on an elevated platform on the west side of the small storage building (Aquaterra, 1989). Two 500-gallon underground storage tanks (USTs) were also reported to be located in the gravel parking lot area near the site exit gate. The two USTs were used to store diesel fuel and were removed around 1987. In addition, a diesel above ground storage tank (AST) that fueled the warehouse boiler had previously been located near the west end of the north warehouse (Versar, 1994).

1.2 Environmental History

In March 1989, the North Carolina Department of Human Resources (NCDHR), Division of Health Service conducted a site visit and inspection and soil sampling at the Worth Chemical facility. Organic and inorganic analyses were conducted on the soil samples collected from various locations around the site. The following volatile organic compounds (VOCs) were reported in the soil samples collected by the NCDHR: acetone, toluene, PCE, TCE, 1,1-dichloroethane (1,1-DCA), 1,1,1-trichloroethane (1,1,1-TCA), and hexachlorobenzene. The acetone concentrations detected in the soil were reported as high as 115,000 micrograms per kilogram (µg/kg) (NCDHR, 1989). Worth Chemical conducted laboratory analysis on three split soil samples and reported the detection of acetone, PCE, TCE, chloroform, and methylene chloride. Elevated concentrations of copper, lead, and mercury were also reported in a soil sample collected east of the distillation pad.

above cleanup level, at 700 ppm

In addition, Aquaterra Consultants conducted an environmental site assessment of the Worth Chemical facility in 1989. The site assessment report included discussion on site ownership and history, environmental setting, chemical waste types, and an evaluation of the laboratory data reported by NCDHR. The report recommended no further action for the site.

In September 1994, C. Johnson Environmental and Versar, Inc. conducted a site investigation at the Worth Chemical facility to evaluate the extent of contamination in the soils that had been identified during the previous investigations. Sixteen VOCs were reported in the soil samples collected by Versar including: acetone, benzene, 2-butanone (MEK), 1,1-dichloroethene (1,1-DCE), methylene chloride, ethylbenzene, 4-methyl-2-pentanone (MIBK), PCE, toluene, 1,1,1-TCA, TCE, xylenes, chloroform, 1,1,2-trichloroethane (1,1,1-TCA), carbon tetrachloride and 1,2-dichloropropane (1,2-DCP). The highest concentrations of VOCs at the site were reported within the vicinity of the former distillation area and the storm drain and associated drainage ditch outside the property. In addition, total petroleum hydrocarbons (TPH) as diesel were reported in a soil sample collected near a diesel AST in the northwest corner of the site. The report concluded that the highest concentrations of contaminants were identified in the surface or near surface soils and that vertical migration of the contaminants would be limited due to the low permeability soils and bedrock at the site.

In August through October 2001, ARCADIS conducted site investigations at the former Worth Chemical facility in order to evaluate the extent of impacts to both soils and groundwater at the site. Field activities included Geoprobe® soil sampling, monitor well installation, groundwater sampling, aquifer tests and a site survey. Twenty-eight (28) soil samples were collected from around the site and submitted for laboratory analysis in August 2001. Laboratory data indicated that the primary constituents of concern detected in the soil samples were PCE and TCE, with concentrations reported as high as 140,000 µg/kg and 50,000 µg/kg, respectively. The detected PCE and TCE concentrations exceeded the maximum soil contaminant concentration (MSCC) values of 7.42 and 18.3 µg/kg, respectively, for contaminants leaching from soil to groundwater as stipulated by the NCDENR Groundwater Section. The results of the soil sampling activities performed by ARCADIS in August 2001 are further discussed in Sections 5.1 and 5.2.

ARCADIS supervised installation of five monitor wells and performed water level measurement and groundwater sampling activities in October 2001. Water level elevation data from the five permanent monitor wells indicated that groundwater flows across the site to the south/southeast/southwest. Laboratory analytical results for the groundwater samples collected from the five newly installed shallow monitor wells

indicated that the following constituents were detected above their respective 15A NCAC 2L Groundwater Standards: acetone, benzene, carbon tetrachloride, chloroform, 1,2-DCA, 1,1-DCE, cis-1,2-dichloroethene (cis-1,2-DCE), trans-1,2-dichloroethene (trans-1,2-DCE), 1,2-DCP, ethylbenzene, 4-methyl-2-pentanone, methylene chloride, PCE, toluene, 1,1,2-TCA, TCE, vinyl chloride and xylenes. TCE was the most highly concentrated VOC constituent in the groundwater with concentrations reported as high as 110,000 micrograms per liter (µg/L). In addition, PCE and chloroform concentrations in groundwater were reported as high as 6,800 µg/L and 3,400 µg/L, respectively.

The results of the soil and groundwater assessment activities conducted by ARCADIS in August through October 2001 were presented in the Soil and Groundwater Assessment Report (ARCADIS, 2002) submitted to the NCDENR on February 6, 2002. The NCDENR issued a notice of violation (NOV) on February 20, 2002, requiring completion of a CSA.

2. Potential Receptors Survey

A receptor survey was performed as part of this site assessment program in July 2002. The initial step of the survey was to determine if there were water supply wells located within 1,500 feet of the site. A base map of the site and all properties within a 1,500 foot radius of the site was obtained from the City of Durham Technology Solutions Office along with a list of the adjacent property owners. The site location and parcel boundaries for all properties located within 1,500 feet of the site are shown on Figure 2-1. A summary of the adjacent property owners and a description of the land use for each parcel are presented in Table 2-1. After obtaining the property information from the City of Durham Technology Solutions Office, ARCADIS staff performed a visual survey of the properties located within the 1,500 foot search radius. No private water supply wells were observed during the visual survey of the properties in the search radius.

The second phase of the receptor survey was to contact personnel with the Durham County Public Health Department to determine if they had any record of public or private water supply wells located within the 1,500 foot search radius. ARCADIS contacted Mr. Robert Brown of the Environmental Health Division of the Durham County Public Health Department to discuss water supply to residences and businesses within the 1,500 foot search radius. Mr. Brown reported that the Durham County Public Health Department did not have any records of public or private water supply wells within 1,500 feet of the site. Mr. Brown also reported that all residential homes and businesses within 1,500 feet of the Former Worth Chemical facility are supplied water by the City of Durham (Durham County Public Health Department, 2002). The City of Durham receives their water supply from two surface water bodies: (1) Little River Reservoir which is located approximately 8.5 miles north of the site, and (2) Lake Michie which is located approximately 14 miles north of the site. Little River Reservoir and Lake Michie are the only locations of surface water intakes for municipal water supply for the City of Durham; therefore, no surface water intakes are located within 0.5 miles of the site.

In addition, during reconnaissance of the properties located within 1,500 feet of the site, no surface water receptors were identified.

3. Site Assessment Program

The second phase of site assessment activities conducted by ARCADIS for the former Worth Chemical facility included: installation and sampling of 18 additional Geoprobe soil borings and two additional hand auger soil borings; installation of two additional shallow on-site and three shallow offsite monitor wells; installation of one deep on-site monitor well; and sampling of the five previously installed and six newly installed monitor wells. The following sections discuss the methodologies utilized for each portion of the field investigation.

3.1 Soil Investigation

The purpose of the soil investigation was to complete delineation of the horizontal and vertical extent of VOC impacts to soils at the former Worth Chemical facility.

3.1.1 Soil Sample Collection Using Direct Push Technology

Information presented in previous investigation reports (NCDHR, 1989; Aquaterra, 1989; Versar, 1994) indicated that soils at the site were impacted by VOCs and diesel petroleum hydrocarbons. The first phase of the ARCADIS soil investigation was conducted in August 2001 and included sampling of 23 Direct Push Technology (DPT) soil borings and 3 hand auger soil borings. The results of the soil investigation identified areas around the site with elevated concentrations of VOCs (ARCADIS, 2002). To further delineate the lateral and vertical extent of impacted soil, ARCADIS conducted an additional phase of soil investigation at the site. ARCADIS subcontracted Regional Probing Services of Raleigh, North Carolina, a licensed drilling company in the State of North Carolina, to advance DPT borings using a truck mounted Geoprobe®.

On April 18 and 19, 2002, 18 DPT borings (GP-24 through GP-40 and GP-43) were advanced at specific locations to provide data necessary to complete delineation of impacts to soils at the former Worth Chemical facility (Figure 3-1). Lithologic logs were prepared for the 18 DPT borings using information collected in the field and are presented in Appendix A along with the lithologic logs from the previously sampled soil borings. Continuous soil cores were collected from each boring to the depth at which Geoprobe refusal occurred. Geoprobe refusal at the site ranged from 5.5 feet below land surface (ft bls) at GP-37 to 11 ft bls at GP-27. Soil samples from each boring were placed in airtight plastic bags for headspace measurements using a MiniRAE 2000 photoionization detector (PID) with an 11.7 eV lamp. One sample

from each boring was selected for laboratory analysis from the interval with the highest PID measurements, or from the 2 to 4 ft bls interval if PID measurements did not indicate soil impacts at depth. All soil samples selected for laboratory analysis were collected from above the water table. Soil samples for laboratory analysis were collected at two depths from borings GP-26 (4-5.5 ft bls and 5.5-7 ft bls), GP-32 (0-2 ft bls and 2-4 ft bls) and GP-38 (4-5.5 ft bls and 7-8 ft bls) and at one depth from each of the other borings. The soil samples designated for laboratory analysis (GP-24 through GP-40 and GP-43) were collected in sample jars provided by the laboratory, packed on ice in a cooler, and shipped via overnight delivery to Pace Analytical Services in Huntersville, North Carolina.

A completed chain-of-custody record was provided with each cooler containing samples to maintain a record of personnel that had contact with the samples. The soil samples were analyzed for VOCs using U.S. Environmental Protection Agency (USEPA) Method 8260. The results of the headspace measurements and laboratory analytical testing are presented in Section 5-1.

3.1.2 Soil Sample Collection Using Hand Augers

To further assess the extent of VOC impacts to soil in areas at the facility that could not be accessed by the Geoprobe, two additional soil borings (HA-4 and HA-5) were sampled using hand augers. The two borings were sampled within the drainage ditch just south of the property and downgradient of the storm water pipe drain. The locations of the borings are shown on Figure 3-1.

On April 19, 2002, sampling commenced at the two drainage ditch locations (HA-4 and HA-5) to evaluate the extent of impacted soils. Lithologic logs were prepared for the two hand auger borings using information collected in the field and are presented in Appendix A. Soil samples were collected from each boring at 1-foot intervals down to hand auger refusal using a decontaminated stainless steel hand auger. Hand auger refusal ranged from 3 ft bls at location HA-4 to 2 ft bls at location HA-1. The soil samples were placed in airtight plastic bags and headspace measurements were collected from the soil samples using the MiniRAE 2000 PID. Soil samples were collected from the two borings for laboratory analysis at depths with the highest PID measurements. The soil samples designated for laboratory analysis were collected in sample jars provided by the laboratory, packed on ice in a cooler, and shipped via overnight delivery to Pace Analytical Services. The results of the headspace measurements and laboratory analytical testing are discussed in Section 5.1.

A completed chain-of-custody record was provided with each cooler containing samples to maintain a record of personnel that had contact with the samples. The soil samples were analyzed for VOCs using USEPA Method 8260.

3.2 Groundwater Investigation

The purpose of the groundwater investigation was to provide additional hydrogeologic information to allow further evaluation of groundwater flow direction at the site and to provide additional water quality information to allow delineation of the extent of the VOC impacted groundwater plume. The analytical results from the groundwater investigation conducted in October 2001(ARCADIS, 2002) were used to assist in selecting locations for the six additional permanent monitor wells.

3.2.1 Monitor Well Installation

A total of five shallow monitor wells (MW-6, MW-7, MW-9, MW-10 and MW-11) and one deep well (MW-8D) were installed as part of the groundwater assessment program to further define the horizontal and vertical extent of impacted groundwater on-site and off-site. The monitor wells were installed from June 4 through 19, 2002. The locations of the monitor wells are shown on Figure 3-1. Monitor-well construction details, including installation date, total depth, screened interval, and relative top-of-casing elevation, are listed in Table 3-1.

All of the monitor wells were installed in specific areas to further delineate groundwater quality as well as characterize groundwater flow direction at the site. The drilling and well installation activities were conducted by Geologic Exploration, a North Carolina licensed well driller, from Statesville, North Carolina, under the supervision of an ARCADIS geologist and in accordance with Well Construction Standards provided in North Carolina Administrative Code 15A Subchapter 2C Section .0100. Well construction records and lithologic logs for the six new and five previously installed monitor wells are presented in Appendix B.

Due to the shallow depth to bedrock at the site, the boreholes for the monitor wells were drilled using both hollow-stem auger and air hammer drilling rigs. All drilling equipment was steam-cleaned prior to use. Nominal 8-inch-diameter boreholes were initiated with the hollow-stem augers until refusal, followed by air hammer drilling to depths that ranged from 25 to 30 ft bls for the Type II shallow wells (MW-6, MW-7, MW-9, MW-10 and MW-11). The total depth of the Type III deep well MW-8D was 110 ft bls. To characterize the geology of the site, split-spoon soil samples were

collected at 5-foot intervals during the hollow-stem auger drilling activities and drill cuttings were collected from the borings at 5-foot intervals during the air hammer drilling activities. Each soil sample was described by a qualified ARCADIS representative for lithology and appearance.

Type II monitor wells (MW-6, MW-7, MW-9, MW-10 and MW-11) were installed between 25 and 30 ft bls and constructed of 2-inch diameter Schedule 40 PVC with riser and 15 to 20 feet of screen. Ten-slot (0.010-inch) screen was selected due to the clay and silt content of the soil. After the screen and riser were installed within each borehole, a silica sand filter pack was placed in the annular space between the well screen and borehole wall, from the base of the boring to approximately 2 feet above the top of the screen. Bentonite pellets were then placed on top of the filter pack to form a seal approximately 4-feet thick. After hydration of the bentonite pellets, the well was grouted to within a few inches of the ground surface. A watertight, locking, expansion cap was installed on top of the 2-inch diameter casing of each well. Each monitor well was completed slightly above grade with a steel, manhole type, protective cover and concrete pad.

The Type III monitor well (MW-8D) was constructed by first advancing a borehole down to 54 ft bls and installing and grouting in place a 6-inch diameter steel outer casing. Once the grout had cured, the borehole was advanced by air rotary techniques through the casing down to 110 ft bls. Monitor Well MW-8D was constructed in the borehole with 2-inch diameter Schedule 40 PVC with riser and 20 feet of screen. After the screen and riser were installed within the borehole, a fine silica sand filter pack was placed in the annular space between the well screen and borehole wall, from the base of the boring to approximately 2 feet above the top of the screen. Bentonite pellets were then placed on top of the filter pack to form a seal approximately 4-feet thick. After hydration of the bentonite pellets, the well was grouted to within a few inches of the ground surface. A watertight, locking, expansion cap was installed on top of the 2-inch diameter casing of the well. Monitor Well MW-8D was completed slightly above grade with a steel, manhole type, protective cover and concrete pad.

3.2.2 Monitor Well Development

Residual clay, silt, and fine sands that collected in the silica sand filter packs and bottoms of the monitor wells were removed by developing the wells. Development was performed by removing water and solids from the wells using dedicated disposable polyethylene bailers. All purge water generated during development of the monitor wells was containerized in 55-gallon drums during field activities.

The monitor wells were developed until the purge water was relatively sand-free and clear or until the wells were bailed dry. Approximately 2.5 gallons to 10 gallons of water were removed from shallow monitor wells MW-6 through MW-11 during development. This quantity of water equates to approximately 3 to 4 well volumes for the monitor wells. Monitor Well MW-8D was bailed dry during development due to a very slow recharge from the deeper bedrock material.

3.2.3 Water Level Measurements

Depth-to-water measurements from top of casing were collected from the monitor-wells at the former Worth Chemical site on June 11, 2002. Water-level measurements were collected with an electric water-level probe, which was decontaminated prior to inserting into each well. Water-level measurements were converted to water-level elevations using the relative top-of-casing elevation survey data. Groundwater flow direction is discussed in Section 4.3.

3.2.4 Groundwater Sample Collection

Groundwater samples were collected from the shallow monitor wells MW-1, MW-2, MW-3, MW-4, MW-5, MW-6, MW-7, MW-9, MW-10, and MW-11 on June 11 through 12, 2002. Groundwater samples were collected from deep monitor well MW-8D on July 3, 2002. Groundwater sampling was conducted in accordance with ARCADIS standard quality assurance protocols. Prior to sample collection, each monitor well was purged using a peristaltic pump and disposable polyethylene tubing or a dedicated polypropylene bailer. Purge water was collected at each well and then containerized in a 55-gallon drum. During the monitor well purging, field measurements of groundwater pH, specific conductance, temperature, dissolved oxygen (DO) and oxidation-reduction potential (ORP) were collected using a flow-through cell and a portable multi-parameter meter calibrated in the field. This information was recorded on a water-sampling form prior to collection of the groundwater sample designated for laboratory analysis. The results of the field tests for these groundwater parameters are discussed in Section 5.3.1. The portable multi-parameter meter was calibrated daily prior to use in accordance with manufacturer's specifications.

Groundwater samples were collected after field parameters were stable over consecutive readings and at least three well volumes were removed. Once collected, groundwater samples were placed in appropriately labeled containers, packed on ice in coolers, and shipped via overnight delivery to Pace Analytical Services for analysis.

The groundwater samples remained in the presence of an ARCADIS project representative until delivery to the Federal Express office. A chain-of-custody record was used to maintain a record of personnel that had contact with the samples.

Groundwater samples collected from monitor wells MW-1 through MW-11 were submitted for analysis of VOCs using USEPA Methods 8260. Additional groundwater samples were collected from monitor wells MW-1, MW-2, MW-4, MW-7, MW-9 and MW-10 and submitted for analyses to evaluate the biogeochemical characteristics of the weathered bedrock aquifer. The additional analyses included: total and dissolved iron and manganese by USEPA Method 200.7; alkalinity by USEPA Method 310.1; chloride, nitrate, nitrite and sulfate by USEPA Method 300.0; ammonia by USEPA Method 350.1; sulfide by USEPA Method 376.2; biochemical oxygen demand (BOD) by USEPA Method 405.1; chemical oxygen demand (COD) by USEPA Method 410.4; total organic carbon (TOC) by SM 5310C; methane and carbon dioxide by AM20GAX; and ethane and ethane by AM18. The groundwater sample analytical results for the monitor well sampling event are discussed in Section 5.3.2.

3.3 Site Survey

ARCADIS subcontracted Combined Surveying Resources (a registered surveyor) from Raleigh, North Carolina, to survey the locations of the newly installed monitor wells and soil borings. Following collection of the above-referenced survey information on July 3, 2002, Combined Surveying Resources revised the base map for the site. This revised base map was utilized to generate the figures presented in this report.

In addition, a water-level measuring point (top of casing) was established at each of the new monitor wells, and the elevation of that measuring point was determined to within ± 0.05 ft relative to an arbitrary point at the site of 500 feet.

4. Hydrogeology

4.1 Regional Geology and Hydrogeology

The site is located in the north-central part of North Carolina in the Piedmont Physiographic Province. Specifically, the site is located within an area of the Piedmont known as the Deep River Triassic Basin (U.S. Geological Survey [USGS], 1966). The Deep River Triassic Basin consists of three interconnected sub-basins. The northern most of the sub-basins is the Durham sub-basin and the site occurs within this sub-basin. The Triassic basin formed as a result of downfaulting of the bedrock and subsequent deposition of sediments that eroded away from higher elevations.

The shallow subsurface materials in the vicinity of the site are composed primarily of clays, silts, and saprolite. The saprolite in this case is a soft, decomposed rock formed in place through chemical weathering of sedimentary rocks. The saprolite, which becomes more competent and less saprolitic with increasing depth, is underlain by sedimentary rocks of the Triassic Basin (USGS, 1966). Specifically, the Triassic bedrock unit occurring beneath the site is described as maroon to gray, arkosic sandstones, siltstones, shales and fanglomerates (USGS, 1966). Bedrock west of the Triassic unit is part of the Carolina Slate Belt and described as metamorphosed dacitic and rhyolitic flows and tuffs, light gray to greenish-gray, interbedded with mafic and intermediate metavolcanic rock and mudstone. Also occurring east of the Triassic unit are late Precambrian to late Cambrian intrusive, metamorphosed granitic rocks, described as well-foliated and containing hornblende (North Carolina Geologic Survey, [NCGS], 1985.

According to Heath (1980) and LeGrand (1988), the hydrogeologic system that exists in the Piedmont possesses unique features in comparison to most other groundwater regions. Groundwater in the site area generally occurs in joints, fractures, and bedding planes of the bedrock units. The active groundwater flow within the bedrock units is limited to fracture flow. The aerial and vertical distribution and interconnection of these fractures is limited. For instance, fractures typically decrease both in width of opening and in frequency with depth. As a result, active groundwater circulation or flow within fractured rocks in the Piedmont is relatively shallow, primarily limited to the upper 250 feet of bedrock. In addition, the bedrock units generally have very low storage capacity for groundwater.

Most of the water flowing in these fractures is derived from vertical leakage from the saprolitic soils and the "unfractured" matrix rock. The regolith or saprolite overlying

the bedrock forms a shallow aquifer system that is the principal storage reservoir and provides a very local source for domestic drinking water. Groundwater movement within this shallow aquifer reservoir is predominantly vertical, intergranular flow.

The groundwater basins developed in this Piedmont system exhibit shallow flow paths and are not aerially extensive. These basins mimic surface-water basins. That is, topographic high points such as ridges and hilltops form drainage basin boundaries and divides which groundwater does not flow across. The topographic highs, located on upland ridges, act as the principal area of groundwater recharge. Perennial streambeds represent another basin boundary, as they represent discharge areas where groundwater flows to the surface as diffuse seepage or springs. Shallow, local groundwater flow paths develop, efficiently moving recharge from hill tops to close-by permanent streams and other surface water bodies.

The interaction of these unique features within the Piedmont develops a series of shallow, aerially small, flow systems that are almost congruent with the surface-water drainage basins (LeGrand, 1988). Each groundwater basin, like the surface-water drainage basin, is separated from adjacent basins. The water table develops in the saprolite in response to precipitation recharge and forms a subdued expression of the local topography. (LeGrand, 1988).

4.2 Site-Specific Geology

Soil underlying the site consists primarily of silt (50 to 70 percent) with variable amounts of clay (20 to 40 percent) and minor amounts of fine to medium grained quartz sand (0 to 20 percent). The uppermost lithologic unit consisted of unconsolidated reddish brown, light gray, and light brown clayey silts to very fine-grained sandy silts. The surficial soils grade into saprolitic or weathered bedrock material at depths ranging from 5.5 to 11 ft bls as determined by Geoprobe refusal. The weathered bedrock material was composed of sandy silt and clay. The weathered bedrock material transitioned into a slightly weathered more competent bedrock material at depths ranging from 25 to 30 ft bls as determined by hollow-stem auger refusal. This slightly weathered bedrock unit consisted primarily of clayey silt to silty sand ranging in color from reddish brown to light brown and included partially weathered rock consisting of sandstone and siltstone. The sand fraction associated with this third unit also consisted of very fine-grained quartz.

Surface soils south of the property (within the vicinities of monitor wells MW-9, MW-10 and MW-11) consisted of silt (50 to 70 percent) with variable amounts of clay (20

to 40 percent) and weathered bedrock materials (20 to 40 percent) and minor amounts of fine to medium grained quartz sand (0 to 20 percent). The uppermost lithologic unit varied from brown, black and pink clayey silts to very fine grained sandy silts and bedrock materials near monitor wells MW-9 and MW-10 to brown and gray clayey silts and bedrock materials near well MW-11. The surface soil materials transitioned into a slightly weathered more competent bedrock material at depths ranging from 10 to 12 ft bls as determined by hollow-stem auger refusal. This slightly weathered bedrock unit consisted primarily of clayey silt to silty sand ranging in color from reddish brown to dark brown and included partially weathered rock consisting of sandstone and siltstone.

The slightly weathered/competent bedrock material at the site was very tight, and the borehole for the deep monitor well MW-8D was initially dry and required several days for 5 feet of water to accumulate in the well. The well was installed on June 19, 2002, and the water level had not reached static conditions as of July 3, 2002, when the well was sampled. Similar slow recharge characteristics were noted during the installation of shallow monitor wells MW-3 and MW-5 in October 2001 (ARCADIS, 2002). However, the boreholes associated with the newly installed shallow monitor wells MW-6, MW-7, MW-9, MW-10 and MW-11 appear to have intersected more highly fractured portions of the weathered bedrock unit based on the fact that the boreholes associated with those five wells filled with water either during or soon after the drilling process. In addition, these wells recovered relatively quickly after development. Similar quick recharge characteristics were noted during the installation of shallow monitor wells MW-1, MW-2 and MW-4 in October 2001 (ARCADIS, 2002). The groundwater recharge information for the shallow monitor wells indicates that although the lithology remains relatively consistent across the site, the hydrogeologic characteristics of the bedrock unit vary considerably depending on the degree of fracturing in a specific area.

Two geologic cross-sections were created using the lithologic information from the Geoprobe and monitor-well borings. The cross-sections are presented in Figures 4-1 and 4-2. Water-level data collected during the June 11, 2002, water level measurement event are included on the cross sections. Cross-section A to A' extends across the site from northwest to southeast and includes lithologic information from monitor wells MW-1, MW-2, MW-7 and MW-6. Cross-section B to B' extends from the north-central portion of the site to south of the property (south side of N.C. Highway 147) and includes lithologic information from monitor wells MW-7, MW-9 and MW-11.

4.3 Groundwater Flow System

4.3.1 Groundwater Flow Direction

Water-level measurement data collected from each of the shallow monitor wells on June 11, 2002, are presented in Table 4-1. The water level measurement for deep well MW-8D was collected on July 3, 2002; however, it should be noted that groundwater was still recharging into the well. The depth-to-water measurements and the converted relative water-level elevations are both listed on the table. The water-level elevation data from the June 11, 2002, measurement event were used to construct the shallow zone water-level contour map presented in Figure 4-3.

Historical water-level elevations are also presented in Table 4-1 for shallow monitor wells MW-1 through MW-5. For monitor wells MW-1, MW-2, MW-4 and MW-5, water-level elevations in June 2002 were generally consistent with elevations determined in October 2001. However, water -level elevations in well MW-3 changed from 469.86 feet above mean sea level (ft msl) in October 2001 to 477.05 ft msl in June 2002.

Based on the information presented on Figure 4-3, groundwater in the shallow portion of the saprolite/weathered bedrock hydrogeologic unit flows across the site from the north/northeast to the south/southwest/southeast and generally follows the land surface topography.

4.3.2 Hydraulic Gradients

The horizontal hydraulic gradient in the upper portion of the saprolite/weathered bedrock hydrogeologic unit across the site ranges from approximately 0.073 feet per foot (ft/ft) between wells MW-1/MW-3 to 0.098 ft/ft between monitor wells MW-7/MW-5, with an average hydraulic gradient of 0.085 ft/ft. Based upon the hydraulic information provided by the monitor wells at the site, larger gradients are observed within the vicinity of monitor well MW-5 as compared to other areas of the site.

4.3.3 Groundwater Flow Velocity

Groundwater flow in the upper portion of the saprolite/weathered bedrock hydrogeologic unit at the site, as determined from the water-level elevation data collected on June 11, 2002, is toward the south/southwest/southeast. An estimated average hydraulic gradient was calculated to be approximately 0.085 ft/ft. Data

obtained from in-situ aquifer tests (slug tests) performed on monitor wells MW-1, MW-2 and MW-4 in October 2001 were used to determine an average hydraulic conductivity for the saprolite/weathered bedrock hydrogeologic unit of 1.718×10^{-4} cm/sec (0.49 ft/day) (ARCADIS, 2002). The average interstitial groundwater flow velocity for the saprolite/bedrock aquifer can be determined using a form of the Darcy equation as follows:

$$V = \frac{K}{Ne}\left(\frac{dh}{dl}\right)$$

where:

V = groundwater flow velocity
K = hydraulic conductivity
$\frac{dh}{dl}$ = groundwater gradient
Ne = effective porosity (assumed to be 15 percent for the saprolite/weathered bedrock hydrogeologic unit)

substituting values determined by ARCADIS:

K = 0.49 ft/day

$\frac{dh}{dl}$ = 0.085 ft/ft

then $V = \frac{0.49 \text{ ft/day } (0.085 \text{ ft/ft})}{0.15}$

V = 0.28 ft/day = 101 ft/year

Inhomogeneities in the aquifer could lead to higher or lower localized rates of flow.

5. Investigation Results For Soil And Groundwater

5.1 Soil Sample Analytical Results

On April 18 and 19, 2002, soil samples were collected from 20 boring locations around the former Worth Chemical facility (GP-24 through GP-40, GP-43, HA-4 and HA-5). Headspace measurements were collected for each of the soil cores at 1 to 2 foot intervals using a PID. The headspace readings for the samples ranged from 3.1 parts per million (ppm) to >9999 ppm, and are listed on the soil lithologic logs in Appendix A. The headspace measurements were used to determine which samples would be submitted for laboratory analysis of VOCs. At least one sample per boring (generally the sample exhibiting the highest headspace measurement) was submitted for laboratory analysis. Two samples collected during the April 2002 sampling event were selected for laboratory analysis from borings GP-26, GP-32 and GP-38 to assist in delineating the vertical extent of soil contamination. A total of 23 soil samples were submitted for laboratory analysis. A summary of the VOC laboratory analytical data for the 23 soil samples collected in April 2002, as well as the 28 soil samples collected in August 2001 is presented in Table 5-1. Laboratory data reports for the soil samples collected in April 2002 are presented in Appendix C.

The soil sample analytical results from both the August 2001 and April 2002 sampling events indicate that PCE was detected in 35 of the 51 soil samples submitted for laboratory analysis (Table 5-1). Of the soil samples from which PCE was reported, concentrations ranged from 7.9 µg/kg at GP-32 (2 to 4 ft bls) to 140,000 µg/kg at GP-17 (2 to 4 ft bls). A summary of the PCE concentrations detected in the soil samples is provided on Figure 5-1. In all 35 soil samples from which PCE was reported, concentrations exceeded the soil-to-groundwater maximum allowable soil contaminant concentration (MSCC) of 7.4 µg/kg as established by the NCDENR Groundwater Section (NCDENR, 2000a). The soil-to-groundwater MSCC is a risk-based corrective action level based on protecting groundwater that may be impacted by contaminants leaching from the soil. Elevated concentrations of PCE were also detected in soil samples from borings GP-14 [0.5 to 2 ft bls] (1,300 µg/kg), GP-15 [2 to 4 ft bls] (1,700 µg/kg), GP-20 [2 to 4 ft bls] (1,700 µg/kg), GP-22 [2 to 4 ft bls] (1,900 µg/kg), HA-3 [2 to 3 ft bls] (7,300 µg/kg), GP-32 [0 to 2 ft bls] (870 µg/kg), GP-34 [2 to 4 ft bls](890 µg/kg) and GP-38 [4 to 5.5 ft bls] (55,000. µg/kg).

Trichloroethene (TCE) was reported in 33 soil samples during the August 2001 and April 2002 sampling events (Table 5-1). Of the soil samples from which TCE was reported, concentrations ranged from 6.2 µg/kg at GP-9 (4 to 6 ft bls) to 50,000 µg/kg

at GP-17 (2 to 4 ft bls). A summary of TCE concentrations in soil samples is provided on Figure 5-2. Elevated concentrations of TCE were also reported in soil samples from borings GP-14 [0.5 to 2 ft bls] (1,600 µg/kg), GP-15 [2 to 4 ft bls] (4,100 µg/kg), GP-22 [2 to 4 ft bls] (2,800 µg/kg), HA-3 [2 to 3 ft bls] (9,800 µg/kg), GP-24 [6 to 7.5 ft bls] (3,000 µg/kg), GP-31 [5.5 to 7 ft bls] (2,100 µg/kg) and GP-38 [4 to 5.5 ft bls] (13,000 µg/kg). Of the 33 soil samples in which TCE was detected, 26 of the samples contained concentrations of TCE above the soil-to-groundwater MSCC of 18.3 µg/kg.

Chloroform was only reported in 5 soil samples during the August 2001 and April 2002 sampling events (Table 5-1). Of the soil samples from which chloroform was reported, concentrations ranged from 18 µg/kg in GP-27 (6 to 8 ft bls) to 1,100 µg/kg in GP-20 (2 to 4 ft bls). All five samples contained chloroform above the soil-to-groundwater MSCC of 1.01 µg/kg. A summary of chloroform concentrations in soil samples is provided on Figure 5-3.

Other chlorinated constituents were reported in elevated concentrations in the soil samples during the August 2001 and April 2002 sampling events (Table 5-1). Vinyl chloride and cis-1,2-dichloroethene (cis-1,2-DCE) were both reported as high as 220 µg/kg and 1,600 µg/kg, respectively, in sample GP-22 (2 to 4 ft bls). 1,1,1-Trichloroethane (1,1,1-TCA) and 1,1-dichloroethene (1,1-DCE) were both reported as high as 14,000 µg/kg and 3,600 µg/kg, respectively, in sample HA-3 (2 to 3 ft bls). 1,2-Dichloropropane was reported as high as 34 µg/kg in sample GP-27 (6 to 8 ft bls) and 1,2,4-trichlorobenzene was reported as high as 4,600 µg/kg in boring GP-32 (0 to 2 ft bls). Concentrations of these six constituents exceeded their respective soil-to-groundwater MSCC values.

Acetone was detected in 14 soil samples during the August 2001 and April 2002 sampling events (Table 5-1). Of the soil samples from which acetone was reported, concentrations ranged from 100 µg/kg in GP-14 (4 to 5.5 ft bls) to 2,000 µg/kg in GP-10 (2 to 4 ft bls). The concentrations of acetone detected in all 14 samples were below the soil-to-groundwater MSCC of 2,810 µg/kg. In addition, 2-butanone (MEK) was reported in 4 soil samples and 4-methyl-2-pentanone (MIBK) was reported in 8 samples, with the highest concentrations of 850 µg/kg and 1,300 µg/kg, respectively, being reported in sample GP-10 (2 to 4 ft bls). Of the 4 samples that reported MEK, only sample GP-10 reported above the soil-to-groundwater MSCC of 690 µg/kg. None of the samples that reported MIBK were above the soil-to-groundwater MSCC of 2,280 µg/kg.

Toluene and xylenes were also detected in a range of concentrations in samples collected around the site during the August 2001 and April 2002 sampling events (Table 5-1). Toluene was reported in 18 samples, ranging in concentrations from 7.7 µg/kg in GP-37 (4 to 5.5 ft bls) to 7,100 µg/kg in GP-14 (0.5 to 2 ft bls); xylenes were reported in 16 samples, ranging in concentrations from 6.4 µg/kg in GP-28 (0 to 2 ft bls) to 7,400 µg/kg in GP-17 (2 to 4 ft bls).

Soil samples were also collected during the August 2001 sampling event to determine if any subsurface contamination is present in the vicinity of former diesel above ground and underground storage tanks at the site (Table 5-1). Concentrations of total petroleum hydrocarbons-diesel (TPH-D) from GP-2 (2 to 3.5 ft bls), GP-3 (2 to 4 ft bls) and GP-11 (2 to 4 t bls) were reported at 9.2, 11 and 69 mg/kg, respectively. Samples GP-3 (2 to 4 ft bls) and GP-11 (2 to 4 t bls) reported TPH-D levels above the soil clean-up action level of 10 mg/kg as established by the NCDENR UST Section (NCDENR, 2000). Soil samples from GP-2 (2 to 3.5 ft bls), GP-3 (2 to 4 ft bls) and GP-11 (2 to 4 t bls) were not collected for VOC analysis. Due to the low levels of TPH-D in the soils, no additional soils were collected for TPH-D analysis during the April 2002 sampling event.

5.2 Identified Areas with Impacted Soil

Based upon the August 2001 and April 2002 soil investigations at the site, approximately five general areas at the former Worth Chemical facility appear to have impacted soil. The five areas are as follows: (1) railroad track area adjacent to the southeast warehouse (GP-15, GP-16, GP-17, GP-23, GP-32 and GP-34), (2) the concrete pavement area between the storage building and the northeast warehouse (GP-9, GP-10, GP-24, GP-27 and GP-28), (3) the area beneath the storage building (GP-14 and GP-26), (4) the area around the concrete pad associated with the former distillation unit east of the southeast warehouse (GP-20, GP-21, GP-22, GP-35, GP-36, GP-37 and GP-38), and (5) the stormwater drain outfall outside the fence near the southwest portion of the site (HA-3, HA-4 and HA-5). The lateral extent and general locations of contaminants and the range of constituents and concentrations may be indicative of more than one release at the site. Based on the headspace measurements and the laboratory data, the impacts to the soil are generally greatest near the surface (in the range of 0 to 4 ft bls) and decrease with depth. This would be consistent with surface spills.

Soils collected from the railroad track area adjacent to the southeast warehouse (GP-15, GP-16, GP-17, GP-23, GP-32 and GP-34) reported PCE ranging in concentration from 7.9 µg/kg to 140,000 µg/kg and TCE ranging in concentration from 9.8 µg/kg to

50,000 µg/kg. The railroad track area, specifically within the vicinity of sampling location GP-17, represents the worst-case scenario for impacts of PCE and TCE to soils at the site.

Soils collected from the concrete pavement area between the storage building and the northeast warehouse (GP-9, GP-10, GP-24, GP-27 and GP-28) contained PCE concentrations as high as 170 µg/kg, TCE as high as 3,000 µg/kg, chloroform as high as 31 µg/kg, and acetone as high as 2,000 µg/kg. The highest concentrations of PCE, chloroform and acetone within this area were all reported in the soil sample collected from GP-10. The concrete pavement area, specifically near location GP-10, represents the worst-case scenario for impacts of acetone to soils at the site. In addition, vertical impacts to soil were noted in samples from boring GP-9 with acetone concentrations increasing from 390 µg/kg at 1 to 3 ft bls to 570 µg/kg at 4 to 6 ft bls.

Soil samples collected from beneath the storage building (GP-14 and GP-26) reported PCE concentrations at 1,300 µg/kg, TCE at 1,600 µg/kg, methylene chloride at 1,600 µg/kg, toluene at 7,100 µg/kg, and xylenes at 2,980 µg/kg. The area beneath the storage building (GP-14 and GP-26) represents the worst-case scenario for impacts of methylene chloride and toluene to soils at the site. The analytical data for samples collected from this area indicate that the concentrations of VOCs decrease with depth; PCE concentrations at GP-14 decrease from 1,300 µg/kg at 0.5 to 2 ft bls to 34 µg/kg at 4 to 5.5 ft bls and TCE concentrations at GP-26 decrease from 230 µg/kg at 4 to 5.5 ft bls to 120 µg/kg at 5.5 to 7 ft bls.

Soils collected within the vicinity of the concrete pad east of the southeast warehouse (GP-20, GP-21, GP-22, GP-35, GP-36, GP-37 and GP-38) reported PCE concentrations as high as 55,000 µg/kg, TCE as high as 13,000 µg/kg, chloroform as high as 1,100 µg/kg, and cis-1,2-DCE as high as 1,600 µg/kg. The area within the vicinity of the concrete pad represents the worst-case scenario for impacts of chloroform (GP-20) and cis-1,2-DCE (GP-22) to soils at the site.

Soils collected at the stormwater drain outfall outside the fence near the southwest portion of the site (HA-3, HA-4 and HA-5) reported PCE concentrations at 7,300 µg/kg, TCE at 9,800 µg/kg, 1,1,1-TCA at 14,000 µg/kg, and 1,1-DCE at 3,600 µg/kg. The area near the stormwater drain outfall (HA-3) represents the worst-case scenario for impacts of 1,1,1-TCA and 1,1-DCE to soils at the site.

5.3 Groundwater Sample Field Parameters and Analytical Results

The groundwater sampling activities conducted at the former Worth Chemical site included sampling of the shallow monitor wells (MW-1, MW-2, MW-3, MW-4, MW-5, MW-6, MW-7, MW-9, MW-10, and MW-11) on June 11 and 12, 2002, and sampling of the deep monitor well (MW-8D) on July 3, 2002. Laboratory analytical reports for the groundwater sampling events are presented in Appendix D. Results of the groundwater investigation at the former Worth Chemical site are discussed below.

5.3.1 Groundwater Parameters

During the monitor well purging process, field measurements of groundwater pH, specific conductance, temperature, DO, and ORP were collected using a flow-through cell and a portable multi-parameter meter calibrated in the field. The field measurements, which were recorded prior to sampling each well, are presented in Table 5-2. The temperature, pH, and specific conductance measurements recorded during the June 11 to 12 and July 3, 2002 sampling events ranged from 18.1 to 20.39 degrees Celsius, 5.43 to 9.55, and 508 to 1,370 micro ohms per centimeter (umhos/cm), respectively. The results of the DO and ORP measurements are discussed in Section 5.3.3.

5.3.2 Groundwater Analytical Results

The groundwater samples collected by ARCADIS from monitor wells MW-1 through MW-11 during the June 11 to 12, and July 3, 2002, sampling events were analyzed for VOCs using USEPA Method 8260. In addition, groundwater samples collected by ARCADIS from monitor wells MW-1 through MW-5 during the October 12, 2001 sampling event were analyzed for VOCs and SVOCs using USEPA Method 8260 and 8270, respectively. The analytical results for the October 2001 and June/July 2002 groundwater sampling events are summarized in Table 5-3. Reported concentrations that exceed the 15A North Carolina Administrative Code (NCAC) 2L Groundwater Standards (NCDENR, 1998) are indicated by an enclosed shaded box.

Laboratory analytical results for the groundwater samples collected from monitor wells MW-1 through MW-11 during the June/July 2002 sampling events indicated that 19 VOCs were detected above laboratory reporting limits (Table 5-3). Of the 19 detected constituents in the groundwater samples, benzene, carbon tetrachloride, chloroform, 1,2-dichloroethane (1,2-DCA), 1,1-DCE, cis-1,2-DCE, trans-1,2-dichloroethene (trans-1,2-DCE), 1,2-dichloropropane (1,2-DCP), ethylbenzene, methylene chloride, PCE,

toluene, 1,1,2-trichloroethane (1,1,2-TCA), TCE, vinyl chloride and xylenes were detected above their respective 15A NCAC 2L Groundwater Standards. 3- & 4-Methylphenol was the only SVOC reported during the October 2001 groundwater sampling event but was not reported above the respective 2L Groundwater Standard.

Trichloroethene (TCE), reported in all ten shallow monitor wells, ranged in concentrations from 7.0 µg/L in MW-1 to 77,000 µg/L in MW-3, as compared to the 2L Groundwater Standard of 2.8 µg/L. PCE, reported in all ten shallow monitor wells, ranged in concentrations from 15 µg/L in MW-1 to 32,000 µg/L in MW-5, as compared to the 2L Groundwater Standard of 0.7 µg/L. Cis-1,2-Dichloroethene (cis-1,2-DCE) concentrations ranged from 83 µg/L in MW-9 to 88,000 µg/L in MW-2, as compared to the 2L Groundwater Standard of 70 µg/L. Vinyl chloride was only reported in well MW-10 at the concentration 170 µg/L, as compared to the 2L Groundwater Standard of 0.015 µg/L. Chloroform concentrations ranged from 8.2 µg/L in MW-1 to 55,000 µg/L in MW-5, as compared to the 2L Groundwater Standard of 0.19 µg/L. Ethylbenzene and xylenes were only reported above the 2L Groundwater Standards (29 µg/L and 530 µg/L) in well MW-2 at the concentration of 2,600 µg/L and 7,100 µg/L, respectively.

No VOCs were detected in the groundwater sample collected from deep well MW-8D during the July 3, 2002, sampling event. Therefore, the VOC impacted groundwater plume appears to be limited in vertical extent to the groundwater occurring in the unconsolidated materials and weathered sandstone/siltstone bedrock. The low permeability of the deeper, and more competent, portions of the sandstone/siltstone bedrock unit appears to be inhibiting migration of the VOC plume.

Groundwater isoconcentration contour maps for PCE, TCE, and chloroform are presented as Figures 5-4, 5-5, and 5-6, respectively. Based upon the isoconcentration contour maps, groundwater is most impacted by PCE and chloroform in the vicinity of monitor well MW-5 and by TCE in the vicinity of wells MW-2, MW-3, and MW-4 (Figures 5-4, 5-5 and 5-6). Concentration gradients of PCE, TCE and chloroform indicate that the groundwater plume is migrating both south and southeast across the site. However, higher concentrations of PCE (32,000 µg/L) and chloroform (55,000 µg/L) in the downgradient well MW-5 as compared to the more upgradient wells MW-2, MW-3, MW-4 and MW-7 might indicate a separate source area in the vicinity of well MW-5 (concrete pad area of the former distillation unit). The soil sample analytical data also indicates that there are two primary source areas at the site, one in the vicinity of wells MW-2, MW-3, and MW-4, and a second source area in the vicinity of well MW-5.

Concentration gradients of PCE, TCE and chloroform indicate that impacted groundwater is present offsite and beneath U.S. Highway 147 (Durham Freeway). As indicated on the groundwater isoconcentration maps (Figures 5-4, 5-5, and 5-6), downgradient monitor wells MW-9 and MW-10, located off-site and on the north side of U.S. Highway 147, are impacted by PCE (48 and 800 µg/L), TCE (1,000 and 1,000 µg/L) and chloroform (7.0 and 340 µg/L). Monitor well MW-11, located south of U.S. Highway 147 and therefore further downgradient that wells MW-9 and MW-10, is impacted by PCE (26 µg/L) and TCE (91 µg/L), but to a lesser degree than wells MW-9 and MW-10.

Based on the information presented on the isoconcentration contour maps, the VOC impacted groundwater plume appears to be approximately 1,000 feet long and 500 feet wide. The VOC impacted groundwater plume is migrating to the south/southeast and the plume migration pathway is not entirely consistent with the groundwater flow pattern observed at the site.

5.3.3 Geochemical Indicators of Biodegradation

During the June 11 and 12, 2002, sampling event, field measurements of groundwater DO and ORP were recorded for all shallow monitor wells using portable multi-parameter meters (Table 5-2) to evaluate the biogeochemical characteristics of the shallow weathered bedrock aquifer at the site. In addition, groundwater samples were collected from several shallow monitor wells (MW-1, MW-2, MW-4, MW-7, MW-9, MW-10) and submitted for laboratory analysis of biogeochemical parameters including total and dissolved iron, total and dissolved manganese, BOD, COD, sulfate, sulfide, nitrate, nitrite, ammonia, chloride, alkalinity and TOC. The analytical results for the biogeochemical parameters are presented in Table 5-4.

The field measurements and analytical results for the biogeochemical parameters were evaluated to determine if the shallow weathered bedrock aquifer is under anaerobic conditions, and to determine if there is evidence of reductive-dechlorination reactions which would lead to the natural degradation of the VOC impacted groundwater plume.

5.3.3.1 Dissolved Oxygen (DO)

DO concentrations were measured in each of the monitor wells in order to determine if anaerobic conditions were present in the aquifer. Generally, DO concentrations above 1.0 mg/L are considered to be indicative of aerobic conditions, and DO concentrations below 1.0 mg/L are considered to be indicative of anaerobic conditions. Under

anaerobic conditions, chlorinated hydrocarbons (i.e., PCE and TCE) can be degraded by the microbial-mediated process of reductive dechlorination. When DO is sufficiently diminished in the aquifer, other electron acceptors (i.e., nitrate, ferrous iron, sulfate) are used by microorganisms to facilitate reductive dechlorination reactions.

The DO concentrations recorded during the June 11 and 12, 2002, sampling event indicate that anaerobic conditions exist in the shallow weathered bedrock aquifer at the site. With the exception of monitor wells MW-6 (2.83 mg/L) and MW-7 (5.48 mg/L), the DO concentrations recorded for the monitor wells were all below 1.0 mg/L. Within the vicinity of the source area at the site, DO concentrations ranged from 0.11 mg/L in monitor well MW-2 to 0.13 mg/L in MW-3. Therefore, the anaerobic conditions may be conducive to reductive dechlorination of the VOC plume which occurs in the shallow weathered bedrock aquifer.

5.3.3.2 Oxidation-Reduction Potential (ORP)

ORP is an indicator of electron activity in the groundwater and infers the tendency of ions to transfer electrons. ORP reactions in groundwater containing organic compounds are usually catalyzed by microorganisms and may be either naturally or artificially induced. Therefore, the ORP level of the groundwater system indicates the types of biological reactions that may occur in the system. ORP levels below 50 mV are necessary to allow reductive-dechlorination reactions to occur; however, optimal levels are -100 mV or lower (USEPA, 1998).

Measurements of ORP (expressed as Eh) taken during the June 11 and 12, 2002, sampling event ranged from –107 mV in monitor well MW-5 to 191 mV in well MW-1 (Table 5-2). Within the vicinity of the source area at the site, ORP values included -99 mV in monitor well MW-2, 177 mV at well MW-3, -29 mV at well MW-4 and –107 mV at well MW-5. The negative Eh values within the vicinity of the source area indicates that reductive-dechlorination reactions are possible.

5.3.3.3 Denitrification (Nitrate and Nitrite)

Nitrate can be used as an electron acceptor for anaerobic degradation of organic carbon after the dissolved oxygen is depleted in the aquifer. Nitrate also acts as a competing electron acceptor in the reductive-dechlorination process. In order for reductive dechlorination to occur, nitrate typically should be less than 1.0 mg/L (USEPA, 1998).

In addition, increased concentrations of nitrite are expected where nitrate reduction is occurring.

Nitrate concentrations for samples collected during the June 11 and 12, 2002, sampling event ranged from below detection in both monitor wells MW-2 and MW-4 to 2.3 mg/L in well MW-7 (Table 5-4). Both monitor wells within the vicinity of the suspected source area (MW-2 and MW-4) reported below detection levels of nitrate. For monitor wells adjacent to and downgradient of the suspected source, nitrate concentrations included 2.3 mg/L in MW-7, 2.1 mg/L in well MW-9, and 0.13 mg/L in well MW-10. This data suggest that nitrate may locally compete with the reductive-dechlorination reactions, but conditions are favorable near the suspected source area for reductive-dechlorination reactions.

5.3.3.4 Iron Reduction (Ferrous Iron)

Iron reduction is the next most energetically favorable electron acceptor pathway. Increasing concentrations of ferrous iron can be an indicator of anaerobic biological degradation of organic carbon (USEPA, 1998). Dissolved iron concentrations for samples collected during the June 11 and 12, 2002, sampling event were only reported in monitor wells MW-2 (1.4 mg/L), MW-7 (0.14 mg/L), MW-9 (0.12 mg/L) and MW-10 (0.091 mg/L) (Table 5-4). The higher concentration of ferrous iron (1.4 mg/L) near the vicinity of the suspected source area could indicate a localized area of iron reduction. However, the low concentrations of dissolved iron in the other wells may indicate that iron reduction is not a prominent anaerobic degradation pathway at the site.

5.3.3.5 Sulfate Reduction

Sulfate may also be a competing electron acceptor. Decreasing concentrations of the sulfate ion may also indicate anaerobic degradation of organic carbon through the biological-mediated reaction of sulfate reduction. During sulfanogenesis, sulfates are reduced to sulfide as microorganisms oxidize carbon. Sulfate typically should be less than 20 mg/L in order for reductive dechlorination to occur (USEPA, 1998). In addition, increased concentrations of sulfide are expected where sulfate reduction is occurring. However, sulfide will preferentially precipitate with available dissolved metals (e.g., ferrous iron) before accumulating in groundwater.

Sulfate concentrations for samples collected during the June 11 and 12, 2002, sampling event ranged from 11 mg/L in monitor well MW-4 to 38 mg/L in well MW-9 (Table 5-

4). Sulfide was not detected in any of the monitor wells during this sampling event. The lower sulfate concentrations in a monitor well within the vicinity of the suspected source area (11 mg/L in well MW-4) may indicate the occurrence of sulfate reduction. However, based on the elevated concentrations of sulfate in other wells within the vicinity of the suspected source area (36 mg/L in well MW-2), it does not appear that sulfanogenesis would significantly compete with reductive-dechlorination reactions at the site.

5.3.3.6 Chloride

Chloride ions are generated in aquifer systems during the reductive dechlorination process by microorganisms that selectively remove chloride from the chlorinated hydrocarbons and replace them with hydrogen. Therefore, elevated concentrations of chloride in the groundwater may be an indicator of reductive dechlorination.

Chloride concentrations for samples collected during the June 11 and 12, 2002, sampling event ranged from 23 mg/L in monitor well MW-9 to 170 mg/L in well MW-2 (Table 5-4). Elevated chloride concentrations were reported in monitor wells adjacent to and sidegradient of the suspected source, including 170 mg/L in well MW-2, 93 mg/L in well MW-4 and 60 mg/L in well MW-7. Upgradient well MW-1 reported the chloride concentration at 35 mg/L. The elevated concentrations of chloride in monitor wells in the vicinity of the source area may indicate that reductive dechlorination reactions are occurring at the site.

In summary, the results of the field parameter measurements for DO and ORP, and the results of the laboratory analyses for nitrate, nitrite, iron, sulfate, and chloride, indicate that anaerobic conditions exist in the shallow weathered bedrock aquifer in some areas beneath the site (specifically in the source areas in the vicinity of wells MW-2, MW-3, MW-4, and MW-5) and there is evidence that reductive-dechlorination reactions are occurring in the shallow weathered bedrock aquifer. In addition, the presence of reductive dechlorination daughter products (e.g., TCE, cis-1,2-DCE; trans-1,2-DCE, and vinyl chloride) in monitor wells located in the source area (MW-2, MW-3, MW-4, MW-5) and in downgradient monitor wells (MW-6, MW-9, MW-10, and MW-11) indicates that reductive-dechlorination reactions are occurring.

6. Data Review And Validation

The purpose of this section is to provide an evaluation of the laboratory analytical data packages for the completeness of data package deliverables (Reporting Level II) for Pace Analytical Laboratories, Inc. (Pace) Projects No. 9233669, 9234281, and 9232215. The groundwater, soil, and associated QC sample data were validated following the rules set forth in the Functional Guidelines for Evaluating Organic Analyses (USEPA, 1994). Additionally, all field data were reviewed to verify the completion of required documentation.

6.1 Field Quality Assurance Components

All field activities were appropriately documented on groundwater and soil sampling logs.

The soil and associated QC samples collected on April 18 and 19, 2002, were analyzed for VOCs [USEPA Method 8260]). One trip blank sample for VOCs was submitted with the soil samples collected. All containers were appropriately labeled, stored in sample containers on ice, and sent via an overnight courier to Pace in Huntersville, North Carolina. All samples were forwarded to Pace with chain-of-custody forms. Copies of the soil sample analytical data reports and associated chain-of-custody forms are included in Appendix C.

The groundwater and associated QC samples collected on June 11 and 12, 2002, were analyzed for VOCs by USEPA Method 8260, and in some cases for total and dissolved iron and manganese by USEPA Method 200.7; alkalinity by USEPA Method 310.1; chloride, nitrate, nitrite and sulfate by USEPA Method 300.0; ammonia by USEPA Method 350.1; sulfide by USEPA Method 376.2; BOD by USEPA Method 405.1; COD by USEPA Method 410.4; TOC by SM 5310C; methane and carbon dioxide by AM20GAX; and ethane and ethane by AM18. Trip blank sample "Trip Blank" accompanied the groundwater samples. All samples were forwarded to Pace with chain-of-custody forms. Copies of the groundwater sample analytical data reports and associated chain-of-custody forms are included in Appendix D.

6.2 Laboratory Quality Assurance Components

All soil and groundwater samples collected on April 18 and 19, 2002, and June 11 and 12, 2002, respectively, were received by Pace in good condition and were analyzed within the required holding time periods. Deviations from QC standards are discussed

below. With the exception of the deviations reported herein, all sample QC parameters were within established control limits. The attached data are valid and usable within the confines of this review.

6.2.1 Volatile Organic Compounds (USEPA Method 8260)

6.2.1.1 Soil Data

For the soil analyses, the required quantitation limits were reported. Four samples were analyzed at multiple dilutions; GP-27 (6-8) (50X), GP-32 (0-2) (50X), GP-38 (4-5.5) (500X), and GP-38 (7-8) (50X). For samples GP-24 (6-7.5), GP-26 (4-5.5), GP-26, (5.5-7), GP-27 (6-8), GP-28 (0-2), GP-31 (5.5-7), GP-32 (2-4), GP-34 (2-4), GP-37 (4-5.5), and GP-38 (4-5.5), several analyte concentrations exceeded the instrument upper calibration range and were qualified as estimated "J".

No VOCs were detected in the Trip Blank associated with these samples. One of the method blanks (Batch 56521) had methylene chloride present at 11 ug/kg. Therefore, the associated samples [GP-38 (4-5.5), GP-39 (5.5-6.5), GP-40 (5.5-7), GP-43 (1-2), HA-4 (2-3), and HA-5 (0-1)] with detected concentrations of this analyte below the action level were qualified as undetected, "U".

The associated laboratory control sample (LCS) and LCS duplicate (LCSD) recoveries, and the RPDs for each of the three batches were within established QC limits with some exceptions. Some of the associated sample data, however, were not qualified because the analytes were not detected in the field samples. The remaining analytes that were outside of acceptance criteria in each of their respective batches were qualified as estimated "J". The laboratory duplicate sample, GP-33 (2-4), criteria (RPD) were not met for three analytes associated with this analysis in Batch 56521. The data for these analytes (methylene chloride, tetrachloroethene, and trichloroethene) for all associated samples, therefore, were qualified as estimated, "J." No other deviations resulting in data qualification were noted.

The VOC soil sample data are valid and usable within the confines of this review.

6.2.1.2 Groundwater Data

For the water analyses, the required quantitation limits were reported. Eight samples were analyzed at multiple dilutions; MW-2 (500X, 1000X), MW-3 (100X, 500X), MW-4 (1000X), MW-5 (500X), MW-6 (10X), MW-7 (50X), MW-9 (20X), and MW-

10 (20X, 50X). For sample MW-4, several analyte concentrations exceeded the instrument upper calibration range and were qualified as estimated "J". No VOCs were detected in the QC blank samples.

For sample MW-7 (1X dilution), one surrogate recovery was outside established control limits. However, the sample results presented were from the 50X dilution run. Therefore, no qualification of the data was performed. All diluted run surrogate recoveries, however, were within control limits.

The LCS recoveries and MS/MSD recoveries and RPDs were within established control QC limits with the following exceptions. Several LCS recoveries were outside QC limits. Much of the associated sample data, however, were not qualified because the analytes were not detected in the field samples. However, due to high percent recoveries of tetrachloroethene, this analyte was qualified as estimated "J", in samples MW-1, MW-2, MW-3, MW-5, and MW-7. One MS sample (MW-4) had percent recoveries outside acceptance criteria. For this sample, the analyte concentrations for benzene, chlorobenzene, 1,1-dichloroethene, toluene, and trichloroethene were qualified as estimated "J". No other deviations resulting in data qualification were noted.

The VOC groundwater sample data are valid and usable within the confines of this review.

6.2.2 Natural Attenuation Parameter Data

Additional groundwater samples were collected from MW-1, MW-2, MW-7, MW-9 and MW-10 and submitted for laboratory analysis for the following parameters: iron and manganese – dissolved (EPA 200.7), iron and manganese – total (EPA 200.7), biochemical oxygen demand (BOD) (EPA 405.1), chemical oxygen demand (COD) (EPA 410.4), sulfide (EPA 376.2), alkalinity (EPA 310.1), nitrogen and ammonia (EPA 350.1), chloride/nitrate/nitrite/sulfate (EPA 300.0), total organic carbon (TOC) (SM 5310C), and methane/ethane/ethene/carbon dioxide (AM20GAX and AM18).

The required quantitation limits were reported. No analytes were detected in the associated QC blank samples. The LCS recoveries and MS/MSD recoveries and RPDs were within the control limits. All laboratory duplicate sample criteria were met. No deviations resulting in data qualification were noted.

7. Summary

Soil and groundwater assessment activities were performed in August through October 2001 (first phase of assessment) and April through July 2002 (second phase of assessment) at the former Worth Chemical site in Durham, North Carolina. During the two phases of assessment, a total of 46 soil borings were installed and sampled, 10 shallow Type II monitor wells (25 to 30 feet deep) were installed and sampled, and one deep Type III monitor well (110 feet deep) was installed and sampled. The purpose of the assessment activities was to collect data that would provide delineation of impacted media resulting from previous operations at the site and to assist with the development of a CSA. The findings of the soil and groundwater assessment activities can be summarized as follows:

7.1 Potential Receptors Survey

A receptor survey was performed as part of this site assessment program in July 2002. The initial step of the survey was to determine if there were water supply wells located within 1,500 feet of the site. A base map of the site and all properties within a 1,500 foot radius of the site was obtained from the City of Durham Technology Solutions Office along with a list of the adjacent property owners. After obtaining the property information from the City of Durham Technology Solutions Office, ARCADIS staff performed a visual survey of the properties located within the 1,500 foot search radius. No private water supply wells were observed during the visual survey of the properties in the search radius.

The second phase of the receptor survey was to contact personnel with the Durham County Public Health Department to determine if they had any record of public or private water supply wells located within the 1,500 foot search radius. The Durham County Public Health Department did not have any records of public or private water supply wells within 1,500 feet of the site. The Durham County Public Health Department also reported that all residential homes and businesses within 1,500 feet of the Former Worth Chemical facility are supplied water by the City of Durham. The City of Durham receives their water supply from two surface water bodies: (1) Little River Reservoir which is located approximately 8.5 miles north of the site, and (2) Lake Michie which is located approximately 14 miles north of the site. Little River Reservoir and Lake Michie are the only locations of surface water intakes for municipal water supply for the City of Durham; therefore, no surface water intakes are located within 0.5 miles of the site.

In addition, during reconnaissance of the properties located within 1,500 feet of the site, no surface water receptors were identified.

7.2 Site Geology

The site is located in the Piedmont Physiographic Province and specifically within the Triassic Basin. Soil underlying the site consists primarily of silt (50 to 70 percent) with variable amounts of clay (20 to 40 percent) and minor amounts of fine to medium grained quartz sand (0 to 20 percent). Drilling activities conducted at the site penetrated to a depth of approximately 110 ft bls and three lithologic units were encountered. The uppermost lithologic unit consisted of unconsolidated reddish brown, light gray, and light brown silty clays to very fine-grained sandy silts. The surficial soils grade into saprolitic or weathered bedrock material at depths ranging from 6 to 10 ft bls as determined by Geoprobe refusal. The weathered bedrock material consisted of sandy silt and clay with rock fragments. The weathered bedrock material transitioned into a slightly weathered and more competent bedrock material at depths ranging from 25 to 30 ft bls as determined by the hollow-stem auger refusal. This slightly weathered/competent bedrock unit consisted primarily of sandy silt to silty sand ranging in color from reddish brown to light brown and included partially weathered rock consisting of sandstone and siltstone.

7.3 Site Hydrogeology

Observations of groundwater recharge in the shallow monitor wells indicates that although the lithology remains relatively consistent across the site, the hydrogeologic characteristics of the weathered bedrock unit vary considerably depending on the degree of fracturing in a specific area. Slow recharge characteristics were noted during the installation of monitor wells MW-3 and MW-5. Both wells required several days for the water level to reach static conditions. The slightly weathered/competent bedrock material at the site can also have a very low hydraulic conductivity. The borehole for monitor well MW-8D was initially dry and groundwater recharged into the borehole at a slow rate requiring several days for 5 feet of water to accumulate in the well. The well was installed on June 19, 2002, and the water level had not reached static conditions as of July 3, 2002, when the well was sampled. The boreholes associated with shallow monitor wells MW-1, MW-2, MW-4, MW-6, MW-7, MW-9, MW-10 and MW-11 intersected more highly fractured sections of the weathered bedrock unit and the boreholes of those wells filled with water either during, or soon after, the drilling process.

Water-level measurements collected from the 11 site monitor wells on June 11, 2002, indicated that groundwater in the surficial hydrogeologic unit (saprolite/weathered bedrock

aquifer) flows south/southeast/southwest across the site. The average hydraulic gradient across the site during the June 11, 2002, measurement event was approximately 0.085 ft/ft. However, larger gradients were observed within the vicinity of monitor well MW-5 as compared to other areas of the site. The average interstitial groundwater flow velocity for the surficial hydrogeologic unit (saprolite/weathered bedrock aquifer) at the site was calculated to be approximately 0.28 ft/day (101 ft/year).

7.4 Soil Investigation Results

A total of 23 DPT soil borings (GP-1 through GP- 23) and 3 hand auger borings (HA-1 through HA-3) were sampled in August 2001. An additional 18 DPT soil borings (GP-24 through GP-40 and GP-43) and 2 hand auger borings (HA-4 and HA-5) were sampled in April 2002. Soil samples were collected and field screened and submitted for laboratory analysis to identify and delineate the source area(s) for VOC constituents. OVM headspace measurements collected on the soil samples ranged from 0.0 ppm to >9,999 ppm. The soil sample with the highest headspace measurement from each boring was submitted for laboratory analysis. Laboratory data indicated that the primary constituents of concern detected in the soil samples were PCE and TCE. The PCE concentrations ranged from below detection to 140,000 µg/kg, while the TCE concentrations ranged from below detection to 50,000 µg/kg. The detected PCE and TCE concentrations exceeded the MSCC values of 7.42 and 18.3 µg/kg, respectively, for contaminants leaching from soil to groundwater as stipulated by the NCDENR Groundwater Section. Based on the headspace measurements and the laboratory data the impacts to soil are generally greatest near the surface (in the range of 0 to 4 ft bls) and decrease with depth. The results of the August 2001 and April 2002 soil sampling events indicate that the horizontal and vertical extent of impacts to site soils have been adequately defined to allow design of remedial actions to address source control/remediation.

7.5 Groundwater Investigation Results

During the two phases of assessment conducted at the site, 10 shallow Type II monitor wells (25 to 30 feet deep) were installed and sampled, and one deep Type III monitor well (110 feet deep) was installed and sampled. Laboratory analytical results for the groundwater samples collected from on-site and off-site monitor wells MW-1 through MW-11 on June 11 to 12 and July 3, 2002, indicated that the following constituents were detected above their respective 15A NCAC 2L Groundwater Standards: benzene, carbon tetrachloride, chloroform, 1,2-DCA, 1,1-DCE, cis-1,2-DCE, trans-1,2-DCE, 1,2-DCP, ethylbenzene, methylene chloride, PCE, toluene, 1,1,2-TCA, TCE, vinyl chloride and xylenes. TCE was the most highly concentrated VOC detected in the groundwater with

concentrations reported as high as 77,000 µg/L in monitor well MW-3. In addition, PCE and chloroform concentrations were both reported as high as 32,000 µg/L and 55,000 µg/L, respectively, in monitor well MW-5.

The results of the June/July 2002 groundwater sampling event were utilized to prepare isoconcentration contour maps for the PCE, TCE, and chloroform plumes in groundwater. Groundwater is most impacted by PCE and chloroform in the vicinity of monitor well MW-5 and by TCE in the vicinity of wells MW-2, MW-3, and MW-4. Concentration gradients of PCE, TCE, and chloroform indicate that the groundwater plume is migrating both south and southeast across the site. Higher concentrations of PCE (32,000 µg/L) and chloroform (55,000 µg/L) in the downgradient well MW-5 as compared to the more upgradient wells MW-2, MW-3, MW-4 and MW-7 indicate a separate source area in the vicinity of well MW-5 (concrete pad area of the former distillation unit). This is consistent with the results of the soil assessment activities which indicate that there are two primary source areas at the site, one in the vicinity of wells MW-2, MW-3, and MW-4, and a second source area in the vicinity of well MW-5.

The analytical results from the June/July 2002 groundwater sampling events indicate that the impacted groundwater plume has migrated offsite and beneath U.S. Highway 147 (Durham Freeway). The impacted groundwater plume appears to be approximately 1,000 feet long and 500 feet wide.

No VOCs were detected in the groundwater sample collected from deep well MW-8D during the July 3, 2002, sampling event. Therefore, the VOC impacted groundwater plume appears to be limited in vertical extent to the groundwater occurring in the unconsolidated materials and weathered sandstone/siltstone bedrock. The low permeability of the deeper, and more competent, portions of the sandstone/siltstone bedrock unit appears to be inhibiting migration of the VOC plume.

The results of the June/July 2002 groundwater sampling events indicate that the horizontal and vertical extent of impacts to site groundwater have been adequately defined to allow design of remedial actions to address the impacted groundwater plume that is emanating from the site.

In addition to evaluating the horizontal and vertical extent of the VOC impacted groundwater plume at the site, biogeochemical parameter information was collected from the site monitor wells to determine if there is evidence of reductive-dechlorination reactions which would lead to the natural degradation of the VOC impacted groundwater plume. Field measurements for DO and ORP and laboratory

analyses for nitrate, nitrite, iron, sulfate, and chloride were evaluated to determine if the shallow weathered bedrock aquifer is under anaerobic conditions, and to determine if the groundwater chemistry data indicates reductive-dechlorination reactions. The results of the field parameter measurements and laboratory analyses indicate that anaerobic conditions exist in the shallow weathered bedrock aquifer in some areas beneath the site (specifically in the source areas in the vicinity of wells MW-2, MW-3, MW-4, and MW-5) and there is evidence that reductive-dechlorination reactions are occurring in the shallow weathered bedrock aquifer. In addition, the presence of reductive dechlorination daughter products (e.g., TCE, cis-1,2-DCE; trans-1,2-DCE, and vinyl chloride) in monitor wells located in the source area (MW-2, MW-3, MW-4, MW-5) and in downgradient monitor wells (MW-6, MW-9, MW-10, and MW-11) indicates that reductive-dechlorination reactions are occurring.

8. References

Aquaterra, 1989. Environmental Site Audit Report, Worth Chemical Corporation, Durham, North Carolina.

ARCADIS, 2002. Soil and Groundwater Assessment Report, Brenntag Southeast Facility (Former Worth Chemical Facility), 2418 East Pettigrew Street, Durham, North Carolina. February.

Durham County Public Health Department, 2002. Personal Communication between Mr. Robert Brown, Environmental Health Division Head, and Mr. Daniel Tomczak, ARCADIS. July 16.

North Carolina Department of Environment and Natural Resources (NCDENR), 2000. Groundwater Section Guidelines For the Investigation and Remediation of Soils and Groundwater - Volume II. July.

North Carolina Department of Environment and Natural Resources (NCDENR), 1998. North Carolina and Administrative Code, Title 15A, Subchapter 2L, *Classifications and Water Quality Standards Applicable to the Groundwaters of North Carolina.*

North Carolina Department of Human Resources, Division of Health Services, 1989. Site Sampling Visit Trip Report, Worth Chemical Corporation, Durham, North Carolina. March 23.

North Carolina Department of Water Resources, Division of Ground Water, 1966. Geology and Groundwater in the Durham Area, North Carolina. By George L. Bain and J.D. Thomas. Groundwater Bulletin Number 7. May.

North Carolina Geological Survey (NCGS), 1985. Geologic Map of North Carolina. Department of Natural Resources & Community Development.

Versar, Inc., 1994. Environmental Investigation Report, Worth Chemical Corporation, 2418 Pettigrew Street, Durham, North Carolina. November 3.

TABLES

ARCADIS

Tables

Table 2-1. Property Owners and Parcel Identification Numbers Within a 1,500 Foot Search Radius, Brenntag Southeast Facility (Former Worth Chemical Facility), Durham, North Carolina.

Parcel Identification Number	Owner Name 1	Owner Name 2	Owner Address 1	Owner Address 2	City	State	Zip Code OWZIPA	Acreage	Land Use Description
0831-19-72-3300	BUCHANAN WALDO BOONE	& WIFE SHERRY C	2314 ASHE ST		DURHAM	NC	27703	0.553	RES/ 1-FAMILY
0831-19-72-4230	POOLE RUTH S		1804 ATHENS ST		DURHAM	NC	27703	1.447	RES/ 1-FAMILY
0831-19-62-7362	FELDER FRANK CHRISTIAN	& WIFE BRANDA F	5223 STEPHENS LANE		DURHAM	NC	27712	0.295	RES/ 1-FAMILY
0831-19-72-1206	AMBASSADOR CATHEDRAL CHURCH		405 BRIGGS AVE		DURHAM	NC	27703	0.757	COMM SVC/ CHURCH
0831-19-62-6215	ERWIN DISTRIBUTING CORP INC		P O BOX 1971		DURHAM	NC	27702	0.169	COMM/ SVC & GAS STATION
0831-19-62-7265	DAVIS ROBERT	& WIFE THELMA	2200 OLIVE BRANCH RD		DURHAM	NC	27703	0.205	RES/ 1-FAMILY
0831-19-62-8294	STEWART ACIE J	& WIFE DOROTHY A	412 S BRIGGS AVE		DURHAM	NC	27703	0.142	RES/ 1-FAMILY
0831-19-62-7148	FOWLER INC M M		MARVIN F POER & COMPANY	4220 NEAL RD	DURHAM	NC	27705	0.191	COMM/ SVC & GAS STATION
0831-19-62-4145	ALI JAMEEL A	& wife salma	4604 DREXEL DRIVE		RALEIGH	NC	27609	0.286	COMM/ 1-STY SGL OCCUPANT
0831-19-62-2186	IMAM HASSAN S		108 CEDARPOST DR		CARY	NC	27513	0.248	*VACANT LAND*
0831-19-72-3101	BOYCE WILLIAM C JR	& WIFE SANDRA K	4002 ROBERTS POINT RD		SORASOTA	FL	34242	0.344	RES/ 2-FAMILY
0831-19-62-8189	RIGSBEE MAXIE C		412 S BRIGGS AVE		DURHAM	NC	27703-4212	0.122	*VACANT LAND*
0831-19-72-2121	GRAHAM LYNN E		205 GET A WAY LN		BAHAMA	NC	27503	0.361	VAC RES/ LOTS-SML TRACTS
0831-19-62-5037	PAGE DISTRIBUTING COMP INC		150 STRAFFORD CT SW		WINSTON SALEM	NC	27103	0.92	COMM/ CONV STORE W/O GAS
0831-19-72-1150	MONTGOMERY MARVIN D	& WIFE CINDA H	9600 BERRYVILLE CT		RALEIGH	NC	27613-7607	0.311	RES/ 1-FAMILY
0831-19-62-8115	WARD ACIE		1340 MARLBOROUGH RD		RALEIGH	NC	27610	0.047	VAC RES/ < 10 ACRES
0831-19-72-0165	BURGESS BLANCHE G		413 S BRIGGS AVE		DURHAM	NC	27703	0.152	RES/ 1-FAMILY
0831-19-62-8144	WHITE JAMES F		2900 E PETTIGREW ST		DURHAM	NC	27703	0.088	VAC RES/ < 10 ACRES
0841-17-10-2725	BORDEN DEVELOPMENT CORPORATION		F K BORDEN JR	1515 W NC HWY 54 STE #11(	DURHAM	NC	27707	93.971	VACANT INDUSTRIAL
0831-19-62-9115	TUDOR MARY L		3810 HERMINE ST		DURHAM	NC	27705	0.026	VAC RES/ < 10 ACRES
0831-20-72-5098	COZART CLINTON D	& WIFE JOHNETTE W	3165 FAYETTEVILLE ST		DURHAM	NC	27707	0.454	RES/ 1-FAMILY
0831-19-62-8181	HASKELL PROPERTIES INC		2900 E PETTIGREW ST		DURHAM	NC	27703	0.089	RES/ 1-FAMILY
0831-19-62-2059	IMAM HASSAN S		108 CEDARPOST DR		CARY	NC	27513	0.258	COMM/ DRIVE-IN BANK
0831-20-72-6085	LENNON MAURY T		2413 OWENS ST		DURHAM	NC	27703	0.233	RES/ 1-FAMILY
0831-20-72-7045	EXUM BARBARA N		1440 POTOMAC HEIGHTS		FT WASHINGTON	MD	20744	0.229	RES/ 1-FAMILY
0831-19-72-3048	BOYCE WILLIAM C JR	& WIFE SANDRA K	104 TENNWOOD CT		DURHAM	NC	27712-8912	0.101	RES/ 1-FAMILY
0831-19-72-0161	JACKSON J W		1708 WYNNE RD		DURHAM	NC	27713	0.154	RES/ 1-FAMILY
0831-19-62-9120	WHITE JAMES F		2900 E PETTIGREW ST		DURHAM	NC	27703	0.063	COMM/ RETAIL SERVICES
0831-19-62-6040	PAGE IRA H ESTATE		PO BOX 536		KURE BEACH	NC	28449-0536	0.599	COMM/ SVC & GAS STATION
0831-20-72-7083	EXUM BARBARA N		1440 POTOMAC HEIGHTS		FT WASHINGTON	MD	20744	0.229	RES/ 1-FAMILY
0831-19-62-0096	PEACE CLEMENT D SR		423 S DRIVER ST		DURHAM	NC	27703	0.308	RES/ 1-FAMILY
0831-19-72-0064	BUY QUICK FOOD MARTS INC	J C BLACKWOOD & K A MAUER	P O BOX 628		DURHAM	NC	27702	0.282	*COMMERCIAL*
0831-19-61-7916	PAGE IRA H ESTATE		PO BOX 536		KURE BEACH	NC	28449-0536	0.303	COMM/ NIGHT CLUBS
0831-19-62-4002	EXCELNAMICS INC		PO BOX 545S ST		DURHAM	NC	27702	0.234	*COMMERCIAL*
0831-19-62-2033	VEREEN JOE B		5321 LACY RD		DURHAM	NC	27713	0.145	RES/ 1-FAMILY
0831-19-61-7963	ROSE STANLEY		1012 N GUTHRIE AVE		DURHAM	NC	27703	0.364	VACANT INDUSTRIAL
0831-19-62-0050	GLEN CURNEL		#4	1704 E PETTIGREW ST	DURHAM	NC	27703	0.258	RES/ 1-FAMILY
0831-19-61-3966	RUGUARU MERCY		408 MINGO CREST DR		KNIGHTDALE	NC	27545	0.326	RES/ 1-FAMILY
0831-19-61-8974	ROSE STANLEY		1012 N GUTHRIE AVE		DURHAM	NC	27703	0.353	COMM/ AUTO BODY-TIRE
0831-19-61-1985	PROCTOR RICHARD C	& THELMA F & ROSA R	1244 ARBOR RD #211		WINSTON-SALEM	NC	27104	0.308	*VACANT LAND*
0831-19-61-0901	GARLAND WOODCRAFT CO INC		BOX 11068		E DURHAM	NC	27703	0.468	COMM/ WHSE-STORAGE
0831-20-71-8964	MURPHY ERIC K		2603 ROCHELLE ST		DURHAM	NC	27703	0.235	RES/ 1-FAMILY
0831-19-71-3963	LOCKLEAR JERRY		1135 FISKE ST		DURHAM	NC	27703	0.214	RES/ 3-FAMILY
0831-19-71-4932	EXCELNAMICS INC		P O BOX 545		DURHAM	NC	27702	0.142	RES/ 1-FAMILY
0831-19-71-4982	EXCELNAMICS INC		P O BOX 545		DURHAM	NC	27702	0.142	RES/ 1-FAMILY
0831-19-71-2993	LEGRANT DIANA BURT		2400 OWEN STREET		DURHAM	NC	27703	0.154	RES/ 1-FAMILY
0831-20-71-5952	REAL ESTATE ASSOCIATES INC		PO BOX 52328		DURHAM	NC	27717	0.246	RES/ 2-FAMILY
0831-19-71-2902	LANGHI JOSEPH M		2309 ANGIER AVE		DURHAM	NC	27701	0.139	*COMMERCIAL*
0831-19-71-1953	MCDOWELL THOMAS R	& JACKIE D MCDOWELL	1717 STAGE RD		DURHAM	NC	27703	0.085	RES/ 1-FAMILY
0831-19-71-1913	MCDOWELL THOMAS R	& JACKIE D MCDOWELL	1717 STAGE RD		DURHAM	NC	27703	0.025	VAC RES/ < 10 ACRES
0831-19-61-9888	KNOWLES BEN LEE		7691 HWY 751		DURHAM	NC	27713	0.122	RES/ 1-FAMILY
0831-19-61-3839	HILLS ROBERT E	& WIFE CYNTHIA W	415 SALEM STREET		DURHAM	NC	27703	0.177	RES/ 1-FAMILY
0831-20-71-6865	D & W INVESTMENT CORP		309 E CHAPEL HILL ST		DURHAM	NC	27701	0.574	RES/ MULTIPLE DWG'S
0831-19-51-7878	LEATHERS CONSTRUCTION COMPANY		2005 E PEABODY ST		DURHAM	NC	27703-4243	0.194	COMM/ OFFICE BLDG
0831-19-61-4762	FOREST HILLS SHOPPING CENTER	LLC	4220 NEAL RD		DURHAM	NC	27705	2.765	COMM/ WHSE-STORAGE
0831-19-61-7541H								1.576	
0831-19-71-0836	BROOKS TOMMIE RANDALL	& BELLE B BROOKS	877 HILLSIDE DAIRY RD		PITTSBORO	NC	27312	0.162	RES/ 1-FAMILY
0831-19-61-1898	BARBEE FAMILY CEMETERY		GEORGE W BARBEE	825 ELLIS RD	DURHAM	NC	27703	0.035	COMM SVC/ CEMETERIES
0831-19-61-3805	DUNN LARRY D JR	& WIFE MONA F	2306 E MAIN ST		DURHAM	NC	27703	0.246	RES/ 1-FAMILY
0831-19-61-8855	MOORE SHARON D		504 S BRIGGS AVE		DURHAM	NC	27703	0.176	RES/ 1-FAMILY
0831-19-61-1835	GARLAND WOODCRAFT CO INC		BOX 11068		E DURHAM	NC	27703	0.164	VACANT COMMERCIAL
0831-20-71-8835	MCNEIL DOROTHY M		500 BINGHAM ST		DURHAM	NC	27703	0.192	RES/ 1-FAMILY

Table 2-1. Property Owners and Parcel Identification Numbers Within a 1,500 Foot Search Radius, Brenntag Southeast Facility (Former Worth Chemical Facility), Durham, North Carolina.

Parcel Identification Number	Owner Name 1	Owner Name 2	Owner Address 1	Owner Address 2	City	State	Zip Code OWZIPA	Acreage	Land Use Description
0831-19-51-7854	LINDSEY SUSAN	& BRENDA DALTON	452 S DRIVER ST		DURHAM	NC	27703	0.159	RES/ 1-FAMILY
0831-19-71-3823	MAGACHI VIRGINIA		7734 KELLY ST		RALEIGH	NC	27615	0.225	RES/ 1-FAMILY
0831-19-61-0842	GARLAND WOODCRAFT CO INC		BOX 11068		E DURHAM	NC	27703	0.07	VACANT COMMERCIAL
0831-19-71-1830	WILLIAMS SHEILA	& HUSBAND WARREN	7 BEECH SLOPE WAY		DURHAM	NC	27713	0.233	RES/ 1-FAMILY
0831-19-51-9850	GARLAND WOODCRAFT CO INC		BOX 11068		E DURHAM	NC	27703	0.236	*INDUSTRIAL*
0831-19-71-3891	NEWMAN ANTHONY C	& WIFE PATRICIA D	3601 DEARBORN DR		DURHAM	NC	27704	0.143	VAC RES/ LOTS-SML TRACTS
0831-19-61-8739	BRIDGES DAISY F		C/O BRUCE BRIDGES	2520 FAYETTEVILLE ST	DURHAM	NC	27707	0.312	VACANT COMMERCIAL
0831-19-71-4739	FOREHAND JAMES BRYANT		3301 PAGE RD		MORRISVILLE	NC	27560	0.107	COMM/ RETAIL SERVICES
0831-19-71-4768	ALEXANDER REDDITT	& WIFE IDA L	1310 MCLAURIN AVE		DURHAM	NC	27707	0.131	RES/ 1-FAMILY
0831-20-71-5738	DEGRAFFENREIDT REGINALD K		4005 CROWN HILL DR		DURHAM	NC	27707	0.328	RES/ 1-FAMILY
0831-19-61-2756	INDUSTRIAL METAL FLAME	SPRAYERS INC	419 SALEM ST		DURHAM	NC	27703	0.5	*INDUSTRIAL*
0831-19-61-0798	GARLAND WOODCRAFT CO INC		BOX 11068		E DURHAM	NC	27703	0.162	*VACANT LAND*
0831-20-71-8810	THORPE ANDREW A		3409 ROCKLAND CREEK RD		BUMPASS	VA	23024	0.146	RES/ 1-FAMILY
0831-19-71-0719	VECCHIONE JIM		2207 EDWIN AVENUE		DURHAM	NC	27705	0.229	VAC RES/ LOTS-SML TRACTS
0831-19-51-7745	DELUCIA FRANK JOSEPH		1811 UNIVERSITY DR		DURHAM	NC	27707-2137	0.252	COMM/ FUNERAL HOME
0831-20-81-0704	BELTON JOYCE F		501 BINGHAM ST		DURHAM	NC	27703	0.476	RES/ 1-FAMILY
0831-19-51-9668	GARLAND WOODCRAFT CO INC		BOX 11068		E DURHAM	NC	27703	0.945	IND/ MANUF-PROCESSING
0831-20-71-8706	MCNEAL WILLIE H		504 BINGHAM ST		DURHAM	NC	27703	0.169	RES/ 1-FAMILY
0831-20-71-6686	SLOAN L WAYNE	& WIFE SALLY C	117 FLEMING DR		DURHAM	NC	27712	1.427	COMM/ MOTOR VEHICLE SVCS
0831-19-61-8626	RANCER VIOLA		712 BRADLEY ROAD		CHAPEL HILL	NC	27516	0.555	*VACANT LAND*
0831-20-81-1773	THOMPSON BARBARA J		2608 OWENS ST		DURHAM	NC	27703	0.312	RES/ 1-FAMILY
0831-19-61-0753	GARLAND WOODCRAFT CO INC		BOX 11068		E DURHAM	NC	27703	0.173	COMM/ WHSE-STORAGE
0831-20-81-1702	BULLARD WENDELL	& PERCEL H BROWN	1532 POMONA DR		DURHAM	NC	27707	0.266	RES/ 1-FAMILY
0831-19-61-6645	NC DEPT OF TRANSPORTATION	C D PARKER	P O BOX 15580		DURHAM	NC	27704	0.278	VACANT EXEMPT
0831-19-71-2781	PARHAM THOMAS	& WIFE KIMBERLY	2408 SUNDIAL CIR		DURHAM	NC	27704	0.152	RES/ 1-FAMILY
0831-19-51-3442	SOUTHCHEM INC		P O BOX 1491		DURHAM	NC	27702	9.913	COMM/ WHSE-STORAGE
0831-19-71-1772	HARRIS MARTHA G		106 PINE RIDGE RD		PITTSBORO	NC	27312	0.12	VAC RES/ LOTS-SML TRACTS
0831-19-71-1701	TYSON-STEVONS WILLIAM L	& WIFE JOHNNIE MAE	2307 CRANE ST		DURHAM	NC	27703	0.095	RES/ 1-FAMILY
0831-19-71-0711	LUTZ WORTH A III		P O BOX 2324		CHAPEL HILL	NC	27515	0.223	VAC RES/ LOTS-SML TRACTS
0831-19-61-2607	M I INVESTMENT CORP		DON & CAROLYN PAGE	PO BOX 536	KURE BEACH	NC	28449-0536	0.222	*COMMERCIAL*
0831-19-71-2680	SMITH CHARLES EDWARD		1715 N ROXBORO STREET		DURHAM	NC	27701	0.472	VAC RES/ LOTS-SML TRACTS
0831-19-71-4508	ALSTON CAROLYN P		APT A-3	1000 FARGO ST	DURHAM	NC	27707	0.415	COMM/ WHSE-STORAGE
0831-20-71-9671	MATHEWS JAMES L	ELIZABETH	507 BINGHAM ST		DURHAM	NC	27703	0.374	RES/ 1-FAMILY
0831-19-61-1671	M I INVESTMENT CORP		DON & CAROLYN PAGE	PO BOX 536	KURE BEACH	NC	28449-0536	0.232	VACANT COMMERCIAL
0831-19-71-1661	MILLER CHARLES J		2312 CRANE ST		DURHAM	NC	27703	0.14	RES/ 1-FAMILY
0831-19-71-1601	EDGERTON CHARLES A		2308 CRANE ST		DURHAM	NC	27703	0.196	RES/ 1-FAMILY
0831-19-61-9690	BRIDGES OSCAR L HEIRS		BRUCE BRIDGES	2520 FAYETTEVILLE ST	DURHAM	NC	27707	0.419	VAC RES/ LOTS-SML TRACTS
0831-20-81-4371	HOUSING AUTHORITY OF THE CITY	OF DURHAM	330 E MAIN ST		DURHAM	NC	27701	4.658	COMM/ APARTMENT-GARDEN
0831-20-81-1535	HASKILL PROPERTIES INC		2900 E PETTIGREW ST		DURHAM	NC	27703	0.887	RES/ 2-FAMILY
0831-19-61-1534	M I INVESTMENT CORP		DON & CAROLYN PAGE	PO BOX 536	KURE BEACH	NC	28449-0536	0.409	*COMMERCIAL*
0831-19-71-4571	CHAMBERS WILLIAM L	& WIFE CATHY B	310 SUMMERWALK CIR		CHAPEL HILL	NC	27514	0.32	*VACANT LAND*
0831-20-71-9552	ROGERS RODNEY	& WIFE TISA	2900 PETTIGREW ST		DURHAM	NC	27703	0.362	VAC RES/ LOTS-SML TRACTS
0831-19-61-6338	RANCER VIOLA		712 BRADLEY ROAD		CHAPEL HILL	NC	27516	1.619	*VACANT LAND*
0831-19-61-4403	HOWARD CHARLES		1901 HART ST		DURHAM	NC	27703	0.75	*COMMERCIAL*
0831-20-71-5474	DEMMINGS FREDERICKA F	& HUSBAND VINCENT L CHERRY	2502 ANGIER AVE		DURHAM	NC	27703	0.24	RES/ 1-FAMILY
0831-19-61-9457	MILBY ZEBEDEE	& PATRICIA L KING MILBY	513 COMMONWEALTH ST		DURHAM	NC	27703	0.312	RES/ 1-FAMILY
0831-19-71-0436	OSBORN DOUGLAS		2319 HURON ST		DURHAM	NC	27707	0.204	VACANT COMMERCIAL
0831-19-71-0496	BRIDGES JOHN		P O BOX 11708		DURHAM	NC	27703	0.216	RES/ 1-FAMILY
0831-19-71-1446	CLAY LEANDER		PO BOX 11613		DURHAM	NC	27703	0.151	RES/ 1-FAMILY
0831-19-71-2494	MCNEIL JAMES W	& WIFE ROSA B	1403 HEARTHSIDE		DURHAM	NC	27707	0.819	COMM/ WHSE-STORAGE
0831-20-71-6421	WILLIAMS JAMES		5605 ROSLYN RD		DURHAM	NC	27712-1723	0.236	RES/ 1-FAMILY
0831-19-61-8329	NC DEPT OF TRANSPORTATION	C D PARKER	P O BOX 15580		DURHAM	NC	27704	0.216	VACANT EXEMPT
0831-20-71-9444	ROGERS RODNEY	& WIFE TISA	2900 E PETTIGREW ST		DURHAM	NC	27703	0.437	RES/ 1-FAMILY
0831-20-71-6387	WILLIAMS DALE	& WIFE TAMAITHA	3 BOB WILKES CT		DURHAM	NC	27703	0.458	RES/ 1-FAMILY
0831-19-71-4463	CHAMBERS WILLIAM L	& WIFE CATHY B	310 SUMMERWALK CIR		CHAPEL HILL	NC	27514	0.194	*VACANT LAND*
0831-19-71-4306	CHAMBERS DAVID R		2704 ALLOWAY CT		RALEIGH	NC	27606	0.228	RES/ 1-FAMILY
0831-20-81-2306	DANIELS NATHAN F	& STEVEN M RAMARGE	P O BOX 155		EFLAND	NC	27243	0.183	RES/ 1-FAMILY
0831-20-81-7256	DAWSON J J		P O BOX 11063		DURHAM	NC	27703	0.819	RES/ 1-FAMILY
0831-20-81-0395	CLAY ALLEN	& WIFE SEDRIA H	2611 ANGIER AVENUE		DURHAM	NC	27703	0.313	RES/ 1-FAMILY
0831-20-81-0337	DEARING O H HEIRS		1707 MAIN ST		DURHAM	NC	27703	0.198	RES/ 1-FAMILY
0831-20-71-7384	WILLIAMS DALE M		3 BOB WILKES CT		DURHAM	NC	27703	0.156	*COMMERCIAL*
0831-19-51-8148	OVERBY MICHAEL W	& WIFE RHONDA L	2106 EAST PETTIGREW ST		DURHAM	NC	27703	1.617	*COMMERCIAL*

Table 2-1. Property Owners and Parcel Identification Numbers Within a 1,500 Foot Search Radius, Brenntag Southeast Facility (Former Worth Chemical Facility), Durham, North Carolina.

Parcel Identification Number	Owner Name 1	Owner Name 2	Owner Address 1	Owner Address 2	City	State	Zip Code OWZIPA	Acreage	Land Use Description
0831-19-71-4363	TRM OF DURHAM LLC		1717 STAGE RD		DURHAM	NC	27703	0.184	RES/ 1-FAMILY
0831-19-61-9300	VEREEN JOE		5321 LACY RD		DURHAM	NC	27713	0.163	RES/ 1-FAMILY
0831-19-61-9269	BRIDGES OSCAR L HEIRS		BRUCE BRIDGES	2520 FAYETTEVILLE ST	DURHAM	NC	27707	0.18	RES/ 1-FAMILY
0831-20-71-8340	WHITE JAMES F		2900 E PETTIGREW ST		DURHAM	NC	27703-4414	0.183	RES/ 1-FAMILY
0831-19-71-0217	NOELL HAROLD L JR		4713 WOODRIDGE DR		RALEIGH	NC	27612	0.186	RES/ 1-FAMILY
0831-19-71-0266	HUNTER HEIRS SWEETIE L		C/O RALPH HUNTER	219 HARGROVE ST	DURHAM	NC	27701	0.229	RES/ 1-FAMILY
0831-20-81-1228	EAST COAST INVESTMENTS INC		PO BOX 11069		DURHAM	NC	27703-0069	0.256	VAC RES/ LOTS-SML TRACTS
0831-20-71-5267	SOUTHERN REPAIR SERVICE INCORP		P O BOX 685		DURHAM	NC	27702	0.261	RES/ 1-FAMILY
0831-19-71-1225	DAVIS RUTH M	& HUSBAND JULIUS	1828 S ALSTON AVE		DURHAM	NC	27707	0.268	RES/ 1-FAMILY
0831-19-71-1175	BARBEE SHELTON ALEXANDER	& WIFE OLLIE M	923 CARPNTER-FLETCHR RD		DURHAM	NC	27713	1.47	COMM/ WHSE-STORAGE
0831-20-81-1198	SHAMBLEY LARRY V	ET AL	107 POINTE PL		HILLSBOROUGH	NC	27278	0.465	VAC RES/ LOTS-SML TRACTS
0831-20-71-9108	BOYCE WILLIAM C JR	& MELVIN M RUDDER	2403 NEW RALEIGH RD		DURHAM	NC	27703	0.508	COMM/ APARTMENT-GARDEN
0831-19-61-0261	WAHEEDA ALI J		6221 SUMMERFIELD DR		DURHAM	NC	27712	0.396	COMM/ WHSE-STORAGE
0831-20-71-6244	WILLIAMS DALE M		3 BOB WILKES CT		DURHAM	NC	27703	0.148	VAC RES/ LOTS-SML TRACTS
0831-19-71-3234	COUNTY OF DURHAM		REAL ESTATE MANAGER	200 E MAIN ST 4TH FLOOR	DURHAM	NC	27701	0.14	*COMMUNITY SERVICES*
0831-20-71-7177	WILLIAMS DALE M		3 BOB WILKES CT		DURHAM	NC	27703	0.606	VAC RES/ LOTS-SML TRACTS
0831-19-71-3153	SEABOARD COASTLINE RAILROAD CO		500 WATER ST	ATTN: TAX DEPT	JACKSONVILLE	FL	32202	1.262	VACANT PUBLIC UTILITY
0831-19-61-9128	GUNTER ROBERT B JR		4263 HWY 751		APEX	NC	27502	0.318	VAC RES/ LOTS-SML TRACTS
0831-20-71-6119	COUNTY OF DURHAM		REAL ESTATE MANAGER	200 E MAIN ST 4TH FLOOR	DURHAM	NC	27701	0.248	VAC RES/ LOTS-SML TRACTS
0831-19-61-2027	EHK PROPERTIES INC		120 S CHURTON ST		HILLSBOROUGH	NC	27278	1.453	*INDUSTRIAL*
0831-20-71-9151	SCOTTON JOHN	& WIFE VIVAREE	109 MIDDLEBURY CT		DURHAM	NC	27713	0.33	RES/ 1-FAMILY
0831-19-61-0122	SHAW SULLER M		609 LINWOOD AVE		DURHAM	NC	27701-4428	0.28	VAC RES/ LOTS-SML TRACTS
0831-20-81-0018	DAVID A MCCOWAN LLC		5205 LACY RD		DURHAM	NC	27713	0.203	RES/ 2-FAMILY
0831-19-61-9100	RANCER SID	& WIFE VIOLA	2453 WAYFARER CT		CHAPEL HILL	NC	27514-6825	0.133	VAC RES/ LOTS-SML TRACTS
0831-20-71-5065	CHURCH OF GOD & TRUE HOLINESS	PRINCIPALS OF DURHAM INC THE	L CAIN	P O BOX 871	HILLIARD	OH	43026	0.614	COMM SVC/ CHURCH
0831-20-81-0076	WILKERSON WILLIAM T		2618 ANGIER AVE		DURHAM	NC	27703	0.134	RES/ 1-FAMILY
0831-19-60-1951	EHK PROPERTIES INC		120 S CHURTON ST		HILLSBOROUGH	NC	27278	0.881	VACANT COMMERCIAL
0831-19-51-9095	SHAW SULLAR M		609 LINWOOD AVE		DURHAM	NC	27701-4428	0.152	VAC RES/ LOTS-SML TRACTS
0831-20-81-1025	CATES DOYLE W		6231 DAWN DRIVE		HURDLE MILLS	NC	27541	0.071	*COMMERCIAL*
0831-20-71-7065	CHURCH OF GOD & TRUE HOLINESS	PRINCIPALS OF DURHAM INC THE	L CAIN	P O BOX 871	HILLIARD	OH	43026	0.297	VAC RES/ LOTS-SML TRACTS
0831-19-61-4081	CHRISTIAN APOSTOLIC HOLINESS C		MARY BLACK	P O BOX 814	ROXBORO	NC	27573	0.215	COMM SVC/ RELIGIOUS
0831-19-51-9070	SHAW SULLAR M		609 LINWOOD AVE		DURHAM	NC	27701-4428	0.208	VAC RES/ LOTS-SML TRACTS
0831-19-60-5900	FLYING CIRCUS ENGLISH CARS LTD		2308 E PETTIGREW ST		DURHAM	NC	27703	1.375	*COMMERCIAL*
0831-19-60-0955	SHAW SULLAR M		609 LINWOOD AVE		DURHAM	NC	27701-4428	0.152	VAC RES/ LOTS-SML TRACTS
0831-19-50-9955	SHAW SULLAR M		609 LINWOOD AVE		DURHAM	NC	27701-4428	0.171	RES/ 1-FAMILY
0831-19-60-6886	N C STATE HIGHWAY COMMISSION		320 E CLUB BLVD		DURHAM	NC	27704	0.481	VACANT EXEMPT
0831-20-80-6851	BORDEN DEVELOPMENT CORPORATION		F K BORDEN JR	1515 W NC HWY 54 STE #11(	DURHAM	NC	27707	3.605	VACANT COMMERCIAL
0831-20-70-8777	LEWIS WILLIAM F		888 LARCH AVE		AMHURST	IL	60126	7.759	COMM/ WHSE-STORAGE
0831-19-50-9931	SHAW SULLAR M		609 LINWOOD AVE		DURHAM	NC	27701-4428	0.107	VAC RES/ < 10 ACRES
0831-19-50-3777	HENDERSON KATHERINE U		107 BRYAN ST #102		MOREHEAD	NC	28557-2543	0.08	VAC RES/ LOTS-SML TRACTS
0831-19-50-3764	EXCELNAMICS INC		P O BOX 545		DURHAM	NC	27702	0.138	RES/ 1-FAMILY
0831-19-70-1451	WORTH CHEMICAL CORPORATION		2 SEGAL BLVD		GREENSBORO	NC	27409	2.754	*COMMERCIAL*
0831-20-80-2434	M G B TRUST	&FK BORDEN TRS&JG BORDEN HEIRS	C/O FRANK K BORDEN	3125 SHANNON RD STE 225	DURHAM	NC	27707	7.711	VACANT COMMERCIAL
0831-19-50-5629	EXCELNAMICS INC		PO BOX 545		DURHAM	NC	27702	0.127	RES/ 1-FAMILY
0831-19-50-3649	EXCELNAMICS INC		P O BOX 545		DURHAM	NC	27702	0.138	RES/ 1-FAMILY
0831-19-70-2527	SEABOARD COASTLINE RAILROAD CO		500 WATER ST	ATTN: TAX DEPT	JACKSONVILLE	FL	32202	0.961	VACANT PUBLIC UTILITY
0831-19-50-5614	EXCELNAMICS INC		P O BOX 545		DURHAM	NC	27702	0.159	RES/ 1-FAMILY
0831-19-50-3625	HESTER WILFORD L	& DERRICK L HESTER	6 N INDIAN CREEK PL		DURHAM	NC	27703	0.138	RES/ 2-FAMILY
0831-19-50-6621	CORY ASHLEY LLC		9109 SULKIRK DR		RALEIGH	NC	27613	0.273	VAC RES/ LOTS-SML TRACTS
0831-19-50-4690	ROBERTS FLORENCE A		P O BOX 2626		DURHAM	NC	27715	0.141	RES/ 1-FAMILY
0831-19-50-3610	EXCELNAMICS INC		P O BOX 545		DURHAM	NC	27702	0.139	RES/ 1-FAMILY
0831-19-50-8514	CORY ASHLEY LLC		9109 SULKIRK DR		RALEIGH	NC	27613	0.535	VAC RES/ LOTS-SML TRACTS
0831-19-50-4575	EXCELNAMICS INC		P O BOX 545		DURHAM	NC	27702	0.14	VAC RES/ LOTS-SML TRACTS
0831-19-50-2595	ROBERTS FLORENCE A		P O BOX 2626		DURHAM	NC	27715	0.139	RES/ 1-FAMILY
0831-19-50-5581	CORY ASHLEY LLC		9109 SULKIRK DR		RALEIGH	NC	27613	0.273	VAC RES/ LOTS-SML TRACTS
0831-19-50-9541	CORY ASHLEY LLC		9109 SULKIRK DR		RALEIGH	NC	27613	0.154	VAC RES/ LOTS-SML TRACTS
0831-19-70-3454	WORTHY F S JR TRS	EMILY O RANKIN CHARITABLE TRS	524 LAKESTONE DR		RALEIGH	NC	27609	0.338	COMM/ WHSE-STORAGE
0831-19-50-4551	ROBERTS FLORENCE A		P O BOX 2626		DURHAM	NC	27715	0.139	RES/ 1-FAMILY
0831-19-60-0411	CORY ASHLEY LLC		9109 SULKIRK DR		RALEIGH	NC	27613	0.393	VAC RES/ LOTS-SML TRACTS
0831-19-50-4446	ROBERTS FLORENCE A		P O BOX 2626		DURHAM	NC	27715	0.138	RES/ 1-FAMILY
0831-19-50-7464	CORY ASHLEY LLC		9109 SULKIRK DR		RALEIGH	NC	27613	0.486	VAC RES/ LOTS-SML TRACTS
0831-19-50-9410	CORY ASHLEY LLC		9109 SULKIRK DR		RALEIGH	NC	27613	0.28	VAC RES/ LOTS-SML TRACTS

Table 2-1. Property Owners and Parcel Identification Numbers Within a 1,500 Foot Search Radius, Brenntag Southeast Facility (Former Worth Chemical Facility), Durham, North Carolina.

Parcel Identification Number	Owner Name 1	Owner Name 2	Owner Address 1	Owner Address 2	City	State	Zip Code OWZIPA	Acreage	Land Use Description
0831-19-50-5328	CORY ASHLEY LLC		9109 SULKIRK DR		RALEIGH	NC	27613	0.362	VAC RES/ LOTS-SML TRACTS
0831-20-80-5117	UNICON TRIANGLE INC		100 MEREDITH DR		DURHAM	NC	27713	5.033	*INDUSTRIAL*
0831-19-50-4421	ROBERTS FLORENCE A		P O BOX 2626		DURHAM	NC	27715	0.136	RES/ 1-FAMILY
0831-19-50-4305	EXCELNAMICS INC		P O BOX 545		DURHAM	NC	27702	0.24	RES/ 1-FAMILY
0831-19-50-7334	UNKNOWN OWNER						00000	0.541	VAC RES/ LOTS-SML TRACTS
0831-19-60-0394	POE CHARLES T,EST	BETTY J	103 TANGLEWOOD DR		GREENVILLE	NC	27858	0.236	VAC RES/ LOTS-SML TRACTS
0831-19-60-2313	POE CHARLES T,EST	BETTY J	103 TANGLEWOOD DR		GREENVILLE	NC	27858	0.227	VAC RES/ LOTS-SML TRACTS
0831-19-60-3301	HERNDON ESTATE MRS W F		7113 MASSEYS CHAPEL RD		DURHAM	NC	27713-9806	0.096	VAC RES/ LOTS-SML TRACTS
0831-20-80-7153	HAYES EZRA		3117 ROWENA AVE		DURHAM	NC	27703	0.764	COMM/ RETAIL SERVICES
0830-07-59-3822	DURHAM TECHNICAL COMMUNITY COL	LEGE	P O BOX 11307	1627 LAWSON ST	DURHAM	NC	27707	15.654	COMM SVC/ COLLEGE
0830-07-69-1892	DUR EXCHANGE CLUB SHELTERED W	ORKSHOP INC	1717 LAWSON ST		DURHAM	NC	27707	12.819	COMM/ WHSE-STORAGE
0830-08-79-8809	SEABOARD COASTLINE RAILROAD CO		500 WATER ST	ATTN: TAX DEPT	JACKSONVILLE	FL	32202	1.064	VACANT PUBLIC UTILITY
0830-08-89-3550	CHANDLER FAMILY LIMITED	PARTNERSHIP	P O BOX 131		BURLINGTON	NC	27215	3.141	*INDUSTRIAL*
0830-08-99-1898	HAYES EZRA		3117 ROWENA AVE		DURHAM	NC	27703	0.565	VACANT COMMERCIAL
0830-08-99-0813	CAROLINA MANNING	& WIFE BETTYE	2823 ANGIER AV		DURHAM	NC	27703	0.153	RES/ 1-FAMILY
0830-08-89-8843	THOMPSON ANTHONY MAURICE	& EZRA HAYES JR & D E HAYES	1727 CRISSY LN		GRAHAM	NC	27253	0.065	*COMMERCIAL*
0830-08-89-8749	THOMPSON ANTHONY MAURICE	& EZRA HAYES JR & D E HAYES	1727 CRISSY LN		GRAHAM	NC	27253	0.077	RES/ 2-FAMILY
0830-08-99-0728	EDGERTON SAM	EULA	2825 ANGIER AV		DURHAM	NC	27703	0.167	RES/ 1-FAMILY
0830-08-89-8772	HAYES EZRA	& SAMANTHA HAYES	2900 ANGIER AVE		DURHAM	NC	27703	0.291	*VACANT LAND*
0830-08-99-0743	PATTERSON THOMAS M		2735 OWENS ST		DURHAM	NC	27703	0.171	RES/ 1-FAMILY
0830-08-89-9533	HAYES EZRA JR	& WIFE SAMANTHA W	3117 ROWENA AVE		DURHAM	NC	27703	0.489	COMM/ MOTOR VEHICLE SVCS
0830-07-59-5410	YARBORO & HESSEE WAREHOUSES	LLC	21 TWINLEAF PL		DURHAM	NC	27705	3.714	COMM/ WHSE-STORAGE
0830-07-69-0119	STEINER CORPORATION		505 EAST SOUTH TEMPLE		SALT LAKE CITY	UT	84102	7.309	*INDUSTRIAL*
0830-07-69-4210	HERMAN MARK S	& WIFE LYNNE	300 WENDOVER CT		DURHAM	NC	27713	4.405	COMM/ WHSE-STORAGE
0830-08-89-5305	NIX MICHAEL C	& WIFE CHRISTINA M	3317 EMORYFIELD PL		DURHAM	NC	27704	0.4	COMM/ WHSE-STORAGE
0830-07-78-0861	DURHAM EXCHANGE CLUB INDUSTRIE		1717 LAWSON ST		DURHAM	NC	27703	35.151	VACANT EXEMPT
0830-08-89-6342	REMPSON JAMES T JR	& WIFE HAZELINE H	#10 HARRINGTON PL		DURHAM	NC	27713	0.277	RES/ 1-FAMILY
0830-08-79-7316	GUNTER ANNIE C		CARL GUNTER	1288 SHARONBROOK DR	TWINSBURG	OH	44087	0.144	VAC RES/ LOTS-SML TRACTS
0830-08-89-7217	BELLAMY SAMUEL JR	& WIFE STEPHANIE M	306 N MAPLE ST		DURHAM	NC	27703	0.248	RES/ 1-FAMILY
0830-08-89-6202	ANDERSON INEZ R		1100 REUNION PL SW		ATLANTA	GA	30331-6356	0.255	VAC RES/ LOTS-SML TRACTS
0830-08-89-5164	BRIDGES CHARLES	& WIFE OALIA B	514 COMMONWEALTH ST		DURHAM	NC	27703	0.351	VACANT COMMERCIAL
0830-08-89-7122	CRENSHAW R W		BARBARA E CLARK	2802 E PETTIGREW ST	DURHAM	NC	27703	0.218	VAC RES/ LOTS-SML TRACTS
0830-08-89-5028	NOEL VEOLA R		6127 YELLOWSTONE DR		DURHAM	NC	27713	0.366	COMM/ OFFICE BLDG
0830-08-78-9721	REYNOLDS TOBACC R J	O CO	P O BOX 2718	CEMETERY	WINSTON SALEM	NC	27102	1.109	COMM SVC/ CEMETERIES
0830-12-76-7348	DURHAM WAREHOUSING CORP	SOCOTAB LEAF TOBACCO CO INC	PO BOX 11347		DURHAM	NC	27703	62.387	COMM/ WHSE-STORAGE

Table 3-1. Summary of Monitor-Well Construction Details, Brenntag Southeast Facility (Former Worth Chemical Facility), Durham, North Carolina.

Monitor Well	Date of Installation	Measuring Point Elevation * (Top of Casing) (ft msl)	Well Casing Diameter (inches)	Total Depth (ft bls)	Screened Interval (ft bls)
MW-1	10/3/2001	499.80	2	25.0	5.0 - 25.0
MW-2	10/3/2001	497.21	2	28.5	8.5 - 28.5
MW-3	10/3/2001	496.67	2	30.0	10.0 - 30.0
MW-4	10/4/2001	495.33	2	29.0	9.0 - 29.0
MW-5	10/4/2001	491.44	2	27.5	7.5 - 27.5
MW-6	6/4/2002	488.42	2	30.0	10.0 - 30.0
MW-7	6/4/2002	492.83	2	28.0	8.0 - 28.0
MW-8D	6/19/2002	496.32	2	109.5	89.5 - 109.5
MW-9	6/4/2002	469.19	2	25.0	10.0 - 25.0
MW-10	6/4/2002	471.48	2	24.5	9.5 - 24.5
MW-11	6/5/2002	464.68	2	28.5	8.5 - 28.5

ft msl Feet above mean sea level.
* Elevations were measured relative to an arbitrary point of 100 feet above mean sea level
ft bls Feet below land surface.

Table 4-1. Historical Water-Level Elevations in Monitor Wells, October 12 and 16, 2001 and June 11, 2002, Brenntag Southeast Facility (Former Worth Chemical Facility), Durham, North Carolina.

Well Number	Top of Casing Elevation * (ft msl)	October 12, 2001 Depth to Water (ft bTOC)	October 12, 2001 Water level Elevation * (ft msl)	October 16, 2001 Depth to Water (ft bTOC)	October 16, 2001 Water level Elevation * (ft msl)	June 11, 2002 Depth to Water (ft bTOC)	June 11, 2002 Water level Elevation * (ft msl)
MW-1	499.80	10.32	489.48	10.49	489.31	8.16	491.64
MW-2	497.21	14.46	482.75	14.93	482.28	14.67	482.54
MW-3	496.67	26.72	469.95	26.81	469.86	19.62	477.05
MW-4	495.33	14.29	481.04	14.51	480.82	14.69	480.64
MW-5	491.44	25.22	466.22	25.12	466.32	23.36	468.08
MW-6	488.42	NA	NA	NA	NA	12.11	476.31
MW-7	492.83	NA	NA	NA	NA	8.86	483.97
MW-8D	496.32	NA	NA	NA	NA	105.08 **	391.24
MW-9	469.19	NA	NA	NA	NA	10.24	458.95
MW-10	471.48	NA	NA	NA	NA	8.79	462.69
MW-11	464.68	NA	NA	NA	NA	6.83	457.85

* Elevations were measured relative to an arbitrary point of 500 feet above mean sea level

** Depth to water measured on July 3, 2002.

ft msl Feet above mean sea level.

ft bTOC Feet below top of casing.

NA Not measured.

Table 5-1. Summary of Soil Sample Analytical Results, August 22-23, 2001 and April 18-19, 2002 Soil Sampling Events, Brenntag Southeast Facility (Former Worth Chemical Facility), Durham, North Carolina.

	Sample Location:	GP1	GP2	GP3	GP4	GP5	GP6	GP7
	Laboratory ID:	921781142	921781159	921781167	921781217	921781225	921781233	921781241
	Depth Interval (ft bls):	2.5-4.0	2.0-3.5	2.0-4.0	2.0-4.0	2.0-4.0	2.0-4.0	2.0-4.0
	Date Sampled:	8/23/2001	8/23/2001	8/23/2001	8/22/2001	8/22/2001	8/22/2001	8/22/2001
Constituents	Soil-to-Groundwater MSCC							
Volatile Organics (ug/kg)								
USEPA Methods 8260								
Acetone	2,810	<95 J[1]	NS	NS	<130 J[1]	<120 J[1]	<110 J[1]	<110 J[1]
Benzene	5.6	<4.8 J[1]	NS	NS	<6.6 J[1]	<6.1 J[1]	<5.7 J[1]	<5.5 J[1]
2-Butanone (MEK)	690	<95 J[1]	NS	NS	<130 J[1]	<120 J[1]	<110 J[1]	<110 J[1]
n-Butylbenzene		<4.8 J[1]	NS	NS	<6.6 J[1]	<6.1 J[1]	<5.7 J[1]	<5.5 J[1]
sec-Butylbenzene		<4.8 J[1]	NS	NS	<6.6 J[1]	<6.1 J[1]	<5.7 J[1]	<5.5 J[1]
Carbon Disulfide		<4.8 J[1]	NS	NS	<6.6 J[1]	<6.1 J[1]	<5.7 J[1]	<5.5 J[1]
Carbon Tetrachloride	2.7	<4.8 J[1]	NS	NS	<6.6 J[1]	<6.1 J[1]	<5.7 J[1]	<5.5 J[1]
Chlorobenzene	438	<4.8 J[1]	NS	NS	<6.6 J[1]	<6.1 J[1]	<5.7 J[1]	<5.5 J[1]
Chloroform	1.01	<4.8 J[1]	NS	NS	<6.6 J[1]	<6.1 J[1]	<5.7 J[1]	<5.5 J[1]
2-Chlorotoluene		<4.8 J[1,3]	NS	NS	**200** J[1,3]	<6.1 J[1,3]	<5.7 J[1,3]	<5.5 J[1,3]
4-Chlorotoluene		<4.8 J[1]	NS	NS	**21** J[1]	<6.1 J[1]	<5.7 J[1]	<5.5 J[1]
1,2-Dichlorobenzene	7,270	<4.8 J[1]	NS	NS	<6.6 J[1]	<6.1 J[1]	<5.7 J[1]	<5.5 J[1]
1,3-Dichlorobenzene		<4.8 J[1]	NS	NS	<6.6 J[1]	<6.1 J[1]	<5.7 J[1]	<5.5 J[1]
1,4-Dichlorobenzene	1,240	<4.8 J[1]	NS	NS	<6.6 J[1]	<6.1 J[1]	<5.7 J[1]	<5.5 J[1]
1,1-Dichloroethane	3,820	<4.8 J[1]	NS	NS	<6.6 J[1]	<6.1 J[1]	<5.7 J[1]	<5.5 J[1]
1,2-Dichloroethane	1.84	<4.8 J[1]	NS	NS	<6.6 J[1]	<6.1 J[1]	<5.7 J[1]	<5.5 J[1]
1,1-Dichloroethene	44.5	<4.8 J[1]	NS	NS	<6.6 J[1]	<6.1 J[1]	<5.7 J[1]	<5.5 J[1]
cis-1,2-Dichloroethene	350	<4.8 J[1,3]	NS	NS	**9.6** J[1,3]	<6.1 J[1,3]	<5.7 J[1,3]	<5.5 J[1,3]
trans-1,2-Dichloroethene	380	<4.8 J[1]	NS	NS	<6.6 J[1]	<6.1 J[1]	<5.7 J[1]	<5.5 J[1]
1,2-Dichloropropane	2.88	<4.8 J[1]	NS	NS	<6.6 J[1]	<6.1 J[1]	<5.7 J[1]	<5.5 J[1]
Ethylbenzene	241	<4.8 J[1]	NS	NS	<6.6 J[1]	<6.1 J[1]	<5.7 J[1]	<5.5 J[1]
Isopropylbenzene		<4.8 J[1]	NS	NS	<6.6 J[1]	<6.1 J[1]	<5.7 J[1]	<5.5 J[1]
p-Isopropyltoluene		<4.8 J[1]	NS	NS	<6.6 J[1]	<6.1 J[1]	<5.7 J[1]	<5.5 J[1]
4-Methyl-2-Pentanone (MIBK)	2,280	<48 J[1]	NS	NS	<66 J[1]	<61 J[1]	<57 J[1]	<55 J[1]
Methylene Chloride	22	<4.8 J[1]	NS	NS	<6.6 J[1]	<6.1 J[1]	<5.7 J[1]	<5.5 J[1]
Naphthalene	585	<4.8 J[1]	NS	NS	<6.6 J[1]	<6.1 J[1]	<5.7 J[1]	<5.5 J[1]
n-Propylbenzene		<4.8 J[1]	NS	NS	<6.6 J[1]	<6.1 J[1]	<5.7 J[1]	<5.5 J[1]
Styrene		<4.8 J[1]	NS	NS	<6.6 J[1]	<6.1 J[1]	<5.7 J[1]	<5.5 J[1]
1,1,1,2-Tetrachloroethane		<4.8 J[1]	NS	NS	<6.6 J[1]	<6.1 J[1]	<5.7 J[1]	<5.5 J[1]
1,1,2,2-Tetrachloroethane	0.953	<4.8 J[1]	NS	NS	<6.6 J[1]	<6.1 J[1]	<5.7 J[1]	<5.5 J[1]
Tetrachloroethene	7.42	<4.8 J[1,3]	NS	NS	**29** J[1,3]	<6.1 J[1,3]	<5.7 J[1,3]	<5.5 J[1,3]
Toluene	7,270	<4.8 J[1]	NS	NS	<6.6 J[1]	<6.1 J[1]	<5.7 J[1]	<5.5 J[1]
1,2,3-Trichlorobenzene		<4.8 J[1]	NS	NS	<6.6 J[1]	<6.1 J[1]	<5.7 J[1]	<5.5 J[1]
1,2,4-Trichlorobenzene	2,610	<4.8 J[1]	NS	NS	<6.6 J[1]	<6.1 J[1]	<5.7 J[1]	<5.5 J[1]
1,1,1-Trichloroethane	1,670	<4.8 J[1]	NS	NS	<6.6 J[1]	<6.1 J[1]	<5.7 J[1]	<5.5 J[1]
1,1,2-Trichloroethane	3.34	<4.8 J[1]	NS	NS	<6.6 J[1]	<6.1 J[1]	<5.7 J[1]	<5.5 J[1]
Trichloroethene	18.3	<4.8 J[1,3]	NS	NS	**47** J[1,3]	<6.1 J[1,3]	<5.7 J[1,3]	<5.5 J[1,3]
Trichlorofluoromethane	31,500	<4.8 J[1]	NS	NS	<6.6 J[1]	<6.1 J[1]	<5.7 J[1]	<5.5 J[1]
1,2,4-Trimethylbenzene	8,000	<4.8 J[1]	NS	NS	<6.6 J[1]	<6.1 J[1]	<5.7 J[1]	<5.5 J[1]
1,3,5-Trimethylbenzene	7,000	<4.8 J[1]	NS	NS	<6.6 J[1]	<6.1 J[1]	<5.7 J[1]	<5.5 J[1]
Vinyl Chloride	0.0952	<9.5 J[1]	NS	NS	<13 J[1]	<12 J[1]	<11 J[1]	<11 J[1]
m&p-Xylene	4,960	<9.5 J[1]	NS	NS	<13 J[1]	<12 J[1]	<11 J[1]	<11 J[1]
o-Xylene	4,960	<4.8 J[1]	NS	NS	<6.6 J[1]	<6.1 J[1]	<5.7 J[1]	<5.5 J[1]
TPH-Diesel (mg/kg)								
USEPA Methods 8015	10	NS	**9.2**	**11**	NS	NS	NS	NS
Percent Solids (%)		88.1	83.6	86.4	77.7	90.6	84.8	87.1

Table 5-1. Summary of Soil Sample Analytical Results, August 22-23, 2001 and April 18-19, 2002 Soil Sampling Events, Brenntag Southeast Facility (Former Worth Chemical Facility), Durham, North Carolina.

	Sample Location:	GP8	GP9	GP9	GP10	GP11	GP12	GP13
	Laboratory ID:	921781258	921781266	921781456	921781274	921781282	921781290	921781308
	Depth Interval (ft bls):	2.0-4.0	1.0-3.0	4.0-6.0	2.0-4.0	2.0-4.0	2.0-3.5	2.0-4.0
	Date Sampled:	8/22/2001	8/22/2001	8/22/2001	8/22/2001	8/22/2001	8/22/2001	8/22/2001
Constituents	Soil-to-Groundwater MSCC							
Volatile Organics (ug/kg)								
USEPA Methods 8260								
Acetone	2,810	<110 J[1]	**390** J[1]	**570** J[2]	**2,000** J[1,2]	NS	<100 J[1]	<120 J[1]
Benzene	5.6	<5.3 J[1]	<5.6 J[1]	<4.5	<5.7 J[1]	NS	<5.0 J[1]	<5.1 J[1]
2-Butanone (MEK)	690	<110 J[1]	**310** J[1]	**460**	**850** J[1,2]	NS	<100 J[1]	<120 J[1]
n-Butylbenzene		<5.3 J[1]	<5.6 J[1]	<4.5	<5.7 J[1]	NS	<5.0 J[1]	<5.1 J[1]
sec-Butylbenzene		<5.3 J[1]	<5.6 J[1]	<4.5	<5.7 J[1]	NS	<5.0 J[1]	<5.1 J[1]
Carbon Disulfide		<5.3 J[1]	<5.6 J[1]	<4.5	<5.7 J[1]	NS	<5.0 J[1]	<5.1 J[1]
Carbon Tetrachloride	2.7	<5.3 J[1]	<5.6 J[1]	<4.5	**6.4** J[1]	NS	<5.0 J[1]	<5.1 J[1]
Chlorobenzene	438	<5.3 J[1]	<5.6 J[1]	<4.5	<5.7 J[1]	NS	<5.0 J[1]	<5.1 J[1]
Chloroform	1.01	<5.3 J[1]	<5.6 J[1]	<4.5	**31** J[1]	NS	<5.0 J[1]	<5.1 J[1]
2-Chlorotoluene		<5.3 J[1,3]	<5.6 J[1,3]	<4.5	<5.7 J[1,3]	NS	<5.0 J[1,3]	<5.1 J[1]
4-Chlorotoluene		<5.3 J[1]	<5.6 J[1]	<4.5	<5.7 J[1]	NS	<5.0 J[1]	<5.1 J[1]
1,2-Dichlorobenzene	7,270	<5.3 J[1]	<5.6 J[1]	<4.5	**36** J[1]	NS	<5.0 J[1]	<5.1 J[1]
1,3-Dichlorobenzene		<5.3 J[1]	<5.6 J[1]	<4.5	<5.7 J[1]	NS	<5.0 J[1]	<5.1 J[1]
1,4-Dichlorobenzene	1,240	<5.3 J[1]	<5.6 J[1]	<4.5	<5.7 J[1]	NS	<5.0 J[1]	<5.1 J[1]
1,1-Dichloroethane	3,820	<5.3 J[1]	<5.6 J[1]	<4.5	<5.7 J[1]	NS	<5.0 J[1]	<5.1 J[1]
1,2-Dichloroethane	1.84	<5.3 J[1]	<5.6 J[1]	<4.5	<5.7 J[1]	NS	<5.0 J[1]	<5.1 J[1]
1,1-Dichloroethene	44.5	<5.3 J[1]	<5.6 J[1]	**5.0**	<5.7 J[1]	NS	<5.0 J[1]	**6.0** J[1]
cis-1,2-Dichloroethene	350	**21** J[1,3]	**11** J[1,3]	**5.7**	**78** J[1,3]	NS	<5.0 J[1,3]	<5.1 J[1]
trans-1,2-Dichloroethene	380	<5.3 J[1]	<5.6 J[1]	<4.5	<5.7 J[1]	NS	<5.0 J[1]	<5.1 J[1]
1,2-Dichloropropane	2.88	**5.4** J[1]	<5.6 J[1]	<4.5	**8.6** J[1]	NS	<5.0 J[1]	<5.1 J[1]
Ethylbenzene	241	<5.3 J[1]	<5.6 J[1]	<4.5	**9.3** J[1]	NS	<5.0 J[1]	<5.1 J[1]
Isopropylbenzene		<5.3 J[1]	<5.6 J[1]	<4.5	<5.7 J[1]	NS	<5.0 J[1]	<5.1 J[1]
p-Isopropyltoluene		<5.3 J[1]	<5.6 J[1]	<4.5	<5.7 J[1]	NS	<5.0 J[1]	<5.1 J[1]
4-Methyl-2-Pentanone (MIBK)	2,280	<53 J[1]	**120** J[1]	**460** J[2]	**1,300** J[1]	NS	<50 J[1]	<58 J[1]
Methylene Chloride	22	<5.3 J[1]	<5.6 J[1]	<4.5	**11** J[1]	NS	<5.0 J[1]	<5.1 J[1]
Naphthalene	585	<5.3 J[1]	<5.6 J[1]	<4.5	<5.7 J[1]	NS	<5.0 J[1]	<5.1 J[1]
n-Propylbenzene		<5.3 J[1]	<5.6 J[1]	<4.5	<5.7 J[1]	NS	<5.0 J[1]	<5.1 J[1]
Styrene		<5.3 J[1]	<5.6 J[1]	<4.5	<5.7 J[1]	NS	<5.0 J[1]	<5.1 J[1]
1,1,1,2-Tetrachloroethane		<5.3 J[1]	<5.6 J[1]	<4.5	<5.7 J[1]	NS	<5.0 J[1]	<5.1 J[1]
1,1,2,2-Tetrachloroethane	0.953	<5.3 J[1]	<5.6 J[1]	<4.5	**6.1** J[1]	NS	<5.0 J[1]	<5.1 J[1]
Tetrachloroethene	7.42	<5.3 J[1,3]	**48** J[1,3]	<4.5	**170** J[1,3]	NS	<5.0 J[1,3]	**20** J[1]
Toluene	7,270	<5.3 J[1]	**11** J[1]	<4.5	**78** J[1]	NS	<5.0 J[1]	<5.1 J[1]
1,2,3-Trichlorobenzene		<5.3 J[1]	<5.6 J[1]	<4.5	<5.7 J[1]	NS	<5.0 J[1]	<5.1 J[1]
1,2,4-Trichlorobenzene	2,610	<5.3 J[1]	<5.6 J[1]	<4.5	<5.7 J[1]	NS	<5.0 J[1]	<5.1 J[1]
1,1,1-Trichloroethane	1,670	<5.3 J[1]	<5.6 J[1]	<4.5	<5.7 J[1]	NS	<5.0 J[1]	<5.1 J[1]
1,1,2-Trichloroethane	3.34	<5.3 J[1]	<5.6 J[1]	<4.5	<5.7 J[1]	NS	<5.0 J[1]	<5.1 J[1]
Trichloroethene	18.3	<5.3 J[1,3]	**21** J[1,3]	**6.2**	**420** J[1,3]	NS	<5.0 J[1,3]	<5.1 J[1]
Trichlorofluoromethane	31,500	<5.3 J[1]	<5.6 J[1]	<4.5	<5.7 J[1]	NS	<5.0 J[1]	<5.1 J[1]
1,2,4-Trimethylbenzene	8,000	<5.3 J[1]	<5.6 J[1]	<4.5	<5.7 J[1]	NS	<5.0 J[1]	<5.1 J[1]
1,3,5-Trimethylbenzene	7,000	<5.3 J[1]	<5.6 J[1]	<4.5	<5.7 J[1]	NS	<5.0 J[1]	<5.1 J[1]
Vinyl Chloride	0.0952	<11 J[1]	<11 J[1]	<9.0	<11 J[1]	NS	<10 J[1]	<10 J[1]
m&p-Xylene	4,960	<11 J[1]	<11 J[1]	<9.0	**32** J[1]	NS	<10 J[1]	<10 J[1]
o-Xylene	4,960	<5.3 J[1]	<5.6 J[1]	<4.5	**17** J[1]	NS	<5.0 J[1]	<5.1 J[1]
TPH-Diesel (mg/kg)								
USEPA Methods 8015	10	NS	NS	NS	NS	**69**	NS	NS
Percent Solids (%)		83.3	84.5	87.5	82.0	88.1	91.0	86.0

Table 5-1. Summary of Soil Sample Analytical Results, August 22-23, 2001 and April 18-19, 2002 Soil Sampling Events, Brenntag Southeast Facility (Former Worth Chemical Facility), Durham, North Carolina.

	Sample Location:	GP14	GP14	GP15	GP16	GP17	GP18	GP19
	Laboratory ID:	921781316	921781449	921781324	921781332	921781340	921781357	921781365
	Depth Interval (ft bls):	0.5-2.0	4.0-5.5	2.0-4.0	1.0-3.0	2.0-4.0	2.0-4.0	1.0-3.0
	Date Sampled:	8/22/2001	8/22/2001	8/22/2001	8/22/2001	8/22/2001	8/22/2001	8/22/2001
Constituents	Soil-to-Groundwater MSCC							
Volatile Organics (ug/kg)								
USEPA Methods 8260								
Acetone	2,810	**170** J[1]	**100**	**230** J[1]	<120 J[1]	<120	<120	<110
Benzene	5.6	<5.2 J[1]	<4.2	**55** J[1]	<5.8 J[1]	<6.1	<6.1	<5.3
2-Butanone (MEK)	690	<100 J[1]	<85	**160** J[1]	<120 J[1]	<120	<120	<110
n-Butylbenzene		<5.2 J[1]	<4.2	<5.2	<5.8 J[1]	<6.1	<6.1	<5.3
sec-Butylbenzene		<5.2 J[1]	<4.2	<5.2	<5.8 J[1]	<6.1	<6.1	<5.3
Carbon Disulfide		<5.2 J[1]	<4.2	<5.2	<5.8 J[1]	<6.1	<6.1	<5.3
Carbon Tetrachloride	2.7	<5.2 J[1]	<4.2	<5.2	**6.1** J[1]	<6.1	<6.1	<5.3
Chlorobenzene	438	<5.2 J[1]	<4.2	<5.2	<5.8 J[1]	**7.6** J[1]	<6.1	<5.3
Chloroform	1.01	<5.2 J[1]	<4.2	<5.2	<5.8 J[1]	<6.1	<6.1	<5.3
2-Chlorotoluene		<5.2 J[1]	<4.2	<5.2	<5.8 J[1]	<6.1	<6.1	<5.3
4-Chlorotoluene		<5.2 J[1]	<4.2	<5.2	<5.8 J[1]	<6.1	<6.1	<5.3
1,2-Dichlorobenzene	7,270	<5.2 J[1]	<4.2	<5.2	<5.8 J[1]	<6.1	<6.1	<5.3
1,3-Dichlorobenzene		<5.2 J[1]	<4.2	<5.2	<5.8 J[1]	<6.1	<6.1	<5.3
1,4-Dichlorobenzene	1,240	<5.2 J[1]	<4.2	<5.2	<5.8 J[1]	<6.1	<6.1	<5.3
1,1-Dichloroethane	3,820	**37** J[1]	<4.2	**13** J[1]	<5.8 J[1]	<6.1	<6.1	<5.3
1,2-Dichloroethane	1.84	<5.2 J[1]	<4.2	<5.2	<5.8 J[1]	<6.1	<6.1	<5.3
1,1-Dichloroethene	44.5	**33** J[1]	<4.2	**71** J[1]	**31** J[1]	**92** J[1]	<6.1	<5.3
cis-1,2-Dichloroethene	350	**390** J[1,2]	**20**	**250** J[1,2]	**35** J[1]	**190** J[1]	<6.1	<5.3
trans-1,2-Dichloroethene	380	<5.2 J[1]	<4.2	<5.2	<5.8 J[1]	<6.1	<6.1	<5.3
1,2-Dichloropropane	2.88	<5.2 J[1]	<4.2	<5.2	<5.8 J[1]	<6.1	<6.1	<5.3
Ethylbenzene	241	**770** J[1]	**15**	**310** J[1,2]	<5.8 J[1]	**1,500** D	<6.1	<5.3
Isopropylbenzene		**21** J[1]	<4.2	<5.2	<5.8 J[1]	**7.8** J[1]	<6.1	<5.3
p-Isopropyltoluene		<5.2 J[1]	<4.2	<5.2	<5.8 J[1]	<6.1	<6.1	<5.3
4-Methyl-2-Pentanone (MIBK)	2,280	<52 J[1]	<42	<52	<58 J[1]	<61	<61	<53
Methylene Chloride	22	**1,600** J[1,2]	**230** J[2]	<5.2	<5.8 J[1]	<6.1	<6.1	<5.3
Naphthalene	585	<5.2 J[1]	<4.2	**25** J[1]	<5.8 J[1]	<6.1	<6.1	<5.3
n-Propylbenzene		**8.8** J[1]	<4.2	<5.2	<5.8 J[1]	<6.1	<6.1	<5.3
Styrene		<5.2 J[1]	<4.2	<5.2	<5.8 J[1]	<6.1	<6.1	<5.3
1,1,1,2-Tetrachloroethane		<5.2 J[1]	<4.2	<5.2	<5.8 J[1]	**9.4** J[1]	<6.1	<5.3
1,1,2,2-Tetrachloroethane	0.953	<5.2 J[1]	<4.2	<5.2	<5.8 J[1]	<6.1	<6.1	<5.3
Tetrachloroethene	7.42	**1,300** J[1,2]	**34**	**1,700** J[1,2]	**590** J[1]	**140,000** D,J[2]	<6.1	<5.3
Toluene	7,270	**7,100** J[1,2]	**470** J[2]	**85** J[1]	<5.8 J[1]	**130** J[1]	<6.1	<5.3
1,2,3-Trichlorobenzene		<5.2 J[1]	<4.2	<5.2	<5.8 J[1]	<6.1	<6.1	<5.3
1,2,4-Trichlorobenzene	2,610	<5.2 J[1]	<4.2	<5.2	<5.8 J[1]	<6.1	<6.1	<5.3
1,1,1-Trichloroethane	1,670	**55** J[1]	<4.2	**22** J[1]	**7.6** J[1]	**27** J[1]	<6.1	<5.3
1,1,2-Trichloroethane	3.34	<5.2 J[1]	<4.2	<5.2	<5.8 J[1]	**48** J[1]	<6.1	<5.3
Trichloroethene	18.3	**1,600** J[1,2]	**29**	**4,100** J[1,2]	**130** J[1]	**50,000** D	<6.1	<5.3
Trichlorofluoromethane	31,500	<5.2 J[1]	<4.2	<5.2	<5.8 J[1]	<6.1	<6.1	<5.3
1,2,4-Trimethylbenzene	8,000	<5.2 J[1]	<4.2	<5.2	<5.8 J[1]	<6.1	<6.1	<5.3
1,3,5-Trimethylbenzene	7,000	<5.2 J[1]	<4.2	<5.2	<5.8 J[1]	<6.1	<6.1	<5.3
Vinyl Chloride	0.0952	**14** J[1]	<8.5	<10	<12 J[1]	<12	<12	<11
m&p-Xylene	4,960	**2,200** J[1,2]	**73**	**800** J[1,2]	<12 J[1]	**4,900** D	<12	<11
o-Xylene	4,960	**780** J[1,2]	**18**	**490** J[1,2]	<5.8 J[1]	**2,500** D	<6.1	<5.3
TPH-Diesel (mg/kg)								
USEPA Methods 8015	10	NS	NS	NS	NS	NS	NS	NS
Percent Solids (%)		83.6	87.8	84.6	82.1	82.1	79.1	88.9

Table 5-1. Summary of Soil Sample Analytical Results, August 22-23, 2001 and April 18-19, 2002 Soil Sampling Events, Brenntag Southeast Facility (Former Worth Chemical Facility), Durham, North Carolina.

	Sample Location:	GP20	GP21	GP22	GP23	GP-24	GP-25	GP-26
	Laboratory ID:	921781373	921781381	921781399	921781407	922218607	922218615	922218623
	Depth Interval (ft bls):	2.0-4.0	5.0-6.0	2.0-4.0	2.5-4.0	6-7.5	4-5.5	4-5.5
	Date Sampled:	8/23/2001	8/23/2001	8/23/2001	8/23/2001	4/18/2002	4/18/2002	4/18/2002
Constituents	Soil-to-Groundwater MSCC							
Volatile Organics (ug/kg)								
USEPA Methods 8260								
Acetone	2,810	**900 J²**	<100	<6,700	<120	<120	<120	**780 J²**
Benzene	5.6	<5.0	<5.2	<6.7	<5.8	<6.0	<5.8	<6.3
2-Butanone (MEK)	690	<110	<100	<130	<120	<120	<120	<130
n-Butylbenzene		<5.0	<5.2	<6.7	<5.8	<6.0	<5.8	<6.3
sec-Butylbenzene		<5.0	<5.2	<6.7	<5.8	<6.0	<5.8	<6.3
Carbon Disulfide		<5.0	<5.2	<6.7	<5.8	<6.0	<5.8	<6.3
Carbon Tetrachloride	2.7	<5.0	<5.2	<6.7	<5.8	<6.0	<5.8	<6.3
Chlorobenzene	438	<5.0	<5.2	<6.7	<5.8	<6.0	<5.8	<6.3
Chloroform	1.01	**1,100**	<5.2	**710 J²**	<5.8	<6.0	<5.8	<6.3
2-Chlorotoluene		<5.0	<5.2	<6.7	<5.8	<6.0	<5.8	<6.3
4-Chlorotoluene		<5.0	<5.2	<6.7	<5.8	<6.0	<5.8	<6.3
1,2-Dichlorobenzene	7,270	**19**	<5.2	<6.7	<5.8	<6.0	<5.8	<6.3
1,3-Dichlorobenzene		<5.0	<5.2	<6.7	<5.8	<6.0	<5.8	<6.3
1,4-Dichlorobenzene	1,240	<5.0	<5.2	<6.7	<5.8	<6.0	<5.8	<6.3
1,1-Dichloroethane	3,820	<5.0	<5.2	**170**	<5.8	<6.0	<5.8	<6.3
1,2-Dichloroethane	1.84	<5.0	<5.2	**7.1**	<5.8	<6.0	<5.8	<6.3
1,1-Dichloroethene	44.5	**6.4**	<5.2	**330 J²**	<5.8	<6.0	<5.8	<6.3
cis-1,2-Dichloroethene	350	<5.0	<5.2	**1,600 D**	<5.8	**260 J²**	<5.8	**85**
trans-1,2-Dichloroethene	380	<5.0	<5.2	**22**	<5.8	<6.0	<5.8	<6.3
1,2-Dichloropropane	2.88	<5.0	<5.2	<6.7	<5.8	**28 J**	<5.8	**8.9 J**
Ethylbenzene	241	<5.0	<5.2	<6.7	<5.8	<6.0	<5.8	**13**
Isopropylbenzene		<5.0	<5.2	<6.7	<5.8	<6.0	<5.8	<6.3
p-Isopropyltoluene		<5.0	<5.2	<6.7	<5.8	<6.0	<5.8	<6.3
4-Methyl-2-Pentanone (MIBK)	2,280	<57	<52	**310**	<58	<60	<58	**160**
Methylene Chloride	22	<5.0	<5.2	**2,100 D**	<5.8	<6.0	<5.8	**7.3**
Naphthalene	585	**16**	<5.2	<6.7	**32**	<6.0	<5.8	<6.3
n-Propylbenzene		<5.0	<5.2	<6.7	<5.8	<6.0	<5.8	<6.3
Styrene		<5.0	<5.2	<6.7	<5.8	<6.0	<5.8	<6.3
1,1,1,2-Tetrachloroethane		<5.0	<5.2	<6.7	<5.8	<6.0	<5.8	<6.3
1,1,2,2-Tetrachloroethane	0.953	<5.0	<5.2	<6.7	<5.8	<6.0	<5.8	<6.3
Tetrachloroethene	7.42	**1,700 J²**	**32**	**1,900 J²**	**220**	**11**	<5.8	**12**
Toluene	7,270	**170**	<5.2	**180**	<5.8	<6.0	<5.8	**45**
1,2,3-Trichlorobenzene		<5.0	<5.2	<6.7	**37**	<6.0	<5.8	<6.3
1,2,4-Trichlorobenzene	2,610	**550 J²**	<5.2	<6.7	**350 J²**	<6.0	<5.8	<6.3
1,1,1-Trichloroethane	1,670	**14**	<5.2	<6.7	<5.8	<6.0	<5.8	<6.3
1,1,2-Trichloroethane	3.34	<5.0	<5.2	**14**	<5.8	<6.0	<5.8	<6.3
Trichloroethene	18.3	**13**	**6.9**	**2,800 J²**	**15**	**3000 J²**	**13**	**230**
Trichlorofluoromethane	31,500	<5.0	<5.2	**38**	<5.8	<6.0	<5.8	<6.3
1,2,4-Trimethylbenzene	8,000	**13**	<5.2	<6.7	<5.8	<6.0	<5.8	<6.3
1,3,5-Trimethylbenzene	7,000	**5.1**	<5.2	<6.7	<5.8	<6.0	<5.8	<6.3
Vinyl Chloride	0.0952	<10	<10	**220**	<12	<12	<12	<13
m&p-Xylene	4,960	<10	<10	<13	<12	<12	<12	**71**
o-Xylene	4,960	<5.0	<5.2	<6.7	<5.8	<6.0	<5.8	**39**
TPH-Diesel (mg/kg)								
USEPA Methods 8015	10	NS	NS	NS	NS	NS	NS	NS
Percent Solids (%)		87.2	91.2	74.9	84.3	83.2	86.3	79.1

Table 5-1. Summary of Soil Sample Analytical Results, August 22-23, 2001 and April 18-19, 2002 Soil Sampling Events, Brenntag Southeast Facility (Former Worth Chemical Facility), Durham, North Carolina.

	Sample Location:	GP-26	GP-27	GP-28	GP-29	GP-30	GP-31	GP-32
	Laboratory ID:	922218631	922218649	922218656	922218664	922218672	922218680	922218698
	Depth Interval (ft bls):	5.5-7	6-8	0-2	4-5.5	2-4	5.5-7	0-2
	Date Sampled:	4/18/2002	4/18/2002	4/18/2002	4/19/2002	4/18/2002	4/18/2002	4/18/2002
Constituents	Soil-to-Groundwater MSCC							
Volatile Organics (ug/kg) USEPA Methods 8260								
Acetone	2,810	**550 J²**	**1100 J²**	<110	<120	<120	<120	**170**
Benzene	5.6	<6.2	<6.3	<5.6	<5.8	<6.0	<6.1	<5.9
2-Butanone (MEK)	690	<120	<130	<110	<120	<120	<120	<120
n-Butylbenzene	4,000	<6.2	<6.3	<5.6	<5.8	<6.0	<6.1	<5.9
sec-Butylbenzene	3,000	<6.2	<6.3	**10**	<5.8	<6.0	<6.1	<5.9
Carbon Disulfide	4,000	<6.2	<6.3	<5.6	<5.8	<6.0	<6.1	<5.9
Carbon Tetrachloride	2.7	<6.2	<6.3	<5.6	<5.8	<6.0	<6.1	<5.9
Chlorobenzene	438	<6.2	<6.3	<5.6	<5.8	<6.0	<6.1	<5.9
Chloroform	1.01	<6.2	**18**	<5.6	<5.8	<6.0	<6.1	<5.9
2-Chlorotoluene		<6.2	<6.3	<5.6	<5.8	<6.0	<6.1	<5.9
4-Chlorotoluene		<6.2	<6.3	<5.6	<5.8	<6.0	<6.1	<5.9
1,2-Dichlorobenzene	7,270	<6.2	**20**	**550 J²**	<5.8	<6.0	<6.1	**630**
1,3-Dichlorobenzene	24,000	<6.2	<6.3	**12**	<5.8	<6.0	<6.1	**11**
1,4-Dichlorobenzene	1,240	<6.2	<6.3	<5.6	<5.8	<6.0	<6.1	<5.9
1,1-Dichloroethane	3,820	<6.2	<6.3	<5.6	<5.8	<6.0	<6.1	<5.9
1,2-Dichloroethane	1.84	<6.2	<6.3	<5.6	<5.8	<6.0	<6.1	**7.5**
1,1-Dichloroethene	44.5	<6.2	<6.3	<5.6	<5.8	<6.0	<6.1	**25**
cis-1,2-Dichloroethene	350	**62**	**580 J²**	<5.6	<5.8	<6.0	<6.1	**14**
trans-1,2-Dichloroethene	380	<6.2	<6.3	<5.6	<5.8	<6.0	<6.1	**25**
1,2-Dichloropropane	2.88	**6.6 J**	**34**	<5.6	<5.8	<6.0	<6.1	<5.9
Ethylbenzene	241	**7.9**	**28**	<5.6	<5.8	<6.0	<6.1	**46**
Isopropylbenzene	2,000	<6.2	<6.3	<5.6	<5.8	<6.0	<6.1	**8.5**
p-Isopropyltoluene		<6.2	<6.3	**13**	<5.8	<6.0	<6.1	<5.9
4-Methyl-2-Pentanone (MIBK)	2,280	**140**	<63	<56	<58	<60	<61	**75**
Methylene Chloride	22	<6.2	**30**	<5.6	**6.1**	<6.0	**7.6**	**17**
Naphthalene	585	<6.2	**13**	**6.7**	<5.8	<6.0	<6.1	**7.7**
n-Propylbenzene	2,000	<6.2	<6.3	<5.6	<5.8	<6.0	<6.1	<5.9
Styrene		<6.2	<6.3	<5.6	<5.8	<6.0	<6.1	**9.7**
1,1,1,2-Tetrachloroethane		<6.2	<6.3	<5.6	<5.8	<6.0	<6.1	<5.9
1,1,2,2-Tetrachloroethane	0.953	<6.2	<6.3	<5.6	<5.8	<6.0	<6.1	<5.9
Tetrachloroethene	7.42	<6.2	**73**	**120**	**8.2**	<6.0	**15**	**870**
Toluene	7,270	**36**	**130**	<5.6	<5.8	<6.0	**7.9**	**84**
1,2,3-Trichlorobenzene		<6.2	<6.3	**980 J²**	<5.8	<6.0	<6.1	**4,600**
1,2,4-Trichlorobenzene	2,610	<6.2	<6.3	**980 J²**	<5.8	<6.0	<6.1	**4,600**
1,1,1-Trichloroethane	1,670	<6.2	<6.3	<5.6	<5.8	<6.0	<6.1	<5.9
1,1,2-Trichloroethane	3.34	<6.2	**9.6**	<5.6	<5.8	<6.0	<6.1	**12**
Trichloroethene	18.3	**120**	**670 J²**	<5.6	**10**	<6.0	**2100 J²**	**660**
Trichlorofluoromethane	31,500	<6.2	<6.3	<5.6	<5.8	<6.0	<6.1	<5.9
1,2,4-Trimethylbenzene	8,000	<6.2	**6.3**	**52**	<5.8	<6.0	<6.1	<5.9
1,3,5-Trimethylbenzene	7,000	<6.2	<6.3	**21**	<5.8	<6.0	<6.1	<5.9
Vinyl Chloride	0.0952	<12	<13	<11	<12	<12	<12	<12
m&p-Xylene	4,960	**47**	**110**	<11	<12	<12	<12	**160**
o-Xylene	4,960	**29**	**53**	**6.4**	<5.8	<6.0	<6.1	**99**
TPH-Diesel (mg/kg) USEPA Methods 8015	10	NS	NS	NS	NS	NS	NS	NS
Percent Solids (%)		80.3	79.5	85.9	89.9	86.8	83.8	81.7

Table 5-1. Summary of Soil Sample Analytical Results, August 22-23, 2001 and April 18-19, 2002 Soil Sampling Events, Brenntag Southeast Facility (Former Worth Chemical Facility), Durham, North Carolina.

Sample Location:		GP-32	GP-33	GP-34	GP-35	GP-36	GP-37	GP-38
Laboratory ID:		922218706	922218714	922218722	922218730	922218748	922218755	922218763
Depth Interval (ft bls):		2-4	2-4	2-4	5.5-6.5	2-4	4-5.5	4-5.5
Date Sampled:		4/18/2002	4/18/2002	4/19/2002	4/19/2002	4/19/2002	4/19/2002	4/19/2002
Constituents	Soil-to-Groundwater MSCC							
Volatile Organics (ug/kg) USEPA Methods 8260								
Acetone	2,810	**350**	<120	<120	<120	<130	**200**	**220**
Benzene	5.6	<5.8	<6.2	<5.9	<6.0	<6.3	<5.7	<5.8
2-Butanone (MEK)	690	<120	<120	<120	<120	<130	<120	<120
n-Butylbenzene	4,000	<5.8	<6.2	<5.9	<6.0	<6.3	<5.7	**65**
sec-Butylbenzene	3,000	<5.8	<6.2	<5.9	<6.0	<6.3	<5.7	<5.8
Carbon Disulfide	4,000	<5.8	<6.2	**73**	<6.0	<6.3	<5.7	<5.8
Carbon Tetrachloride	2.7	<5.8	<6.2	<5.9	<6.0	<6.3	<5.7	**9.6**
Chlorobenzene	438	<5.8	<6.2	<5.9	<6.0	<6.3	<5.7	**15**
Chloroform	1.01	<5.8	<6.2	<5.9	<6.0	<6.3	<5.7	**28**
2-Chlorotoluene		<5.8	<6.2	<5.9	<6.0	<6.3	<5.7	<5.8
4-Chlorotoluene		<5.8	<6.2	<5.9	<6.0	<6.3	<5.7	<5.8
1,2-Dichlorobenzene	7,270	**22**	<6.2	<5.9	<6.0	<6.3	<5.7	<5.8
1,3-Dichlorobenzene	24,000	<5.8	<6.2	<5.9	<6.0	<6.3	<5.7	<5.8
1,4-Dichlorobenzene	1,240	<5.8	<6.2	<5.9	<6.0	<6.3	<5.7	<5.8
1,1-Dichloroethane	3,820	<5.8	<6.2	<5.9	<6.0	<6.3	<5.7	<5.8
1,2-Dichloroethane	1.84	<5.8	<6.2	<5.9	<6.0	<6.3	<5.7	<5.8
1,1-Dichloroethene	44.5	<5.8	<6.2	<5.9	<6.0	<6.3	<5.7	<5.8
cis-1,2-Dichloroethene	350	<5.8	<6.2	**62**	<6.0	<6.3	<5.7	<5.8
trans-1,2-Dichloroethene	380	<5.8	<6.2	<5.9	<6.0	<6.3	<5.7	<5.8
1,2-Dichloropropane	2.88	<5.8	<6.2	<5.9	<6.0	<6.3	<5.7	<5.8
Ethylbenzene	241	<5.8	<6.2	<5.9	<6.0	<6.3	<5.7	**87**
Isopropylbenzene	2,000	<5.8	<6.2	<5.9	<6.0	<6.3	<5.7	**20**
p-Isopropyltoluene		<5.8	<6.2	<5.9	<6.0	<6.3	<5.7	**57**
4-Methyl-2-Pentanone (MIBK)	2,280	**78**	<62	<59	<60	<63	<57	<58
Methylene Chloride	22	<5.8	**7.8 J**	**7.1**	**7.4**	**11**	**8.7**	**6.2 U[B]**
Naphthalene	585	<5.8	<6.2	<5.9	<6.0	<6.3	<5.7	**200**
n-Propylbenzene	2,000	<5.8	<6.2	<5.9	<6.0	<6.3	<5.7	**36**
Styrene		<5.8	<6.2	<5.9	<6.0	<6.3	<5.7	<5.8
1,1,1,2-Tetrachloroethane		<5.8	<6.2	<5.9	<6.0	<6.3	<5.7	**19**
1,1,2,2-Tetrachloroethane	0.953	<5.8	<6.2	<5.9	<6.0	<6.3	<5.7	<5.8
Tetrachloroethene	7.42	**7.9**	**19 J**	**890 J[2]**	**26**	**9.5**	**270 J[2]**	**55,000**
Toluene	7,270	<5.8	<6.2	**8.4**	<6.0	<6.3	**7.7**	**1000 J[2]**
1,2,3-Trichlorobenzene		**110**	**7.9**	**7.8**	<6.0	<6.3	<5.7	<5.8
1,2,4-Trichlorobenzene	2,610	**270 J[2]**	**12**	<5.9	<6.0	<6.3	<5.7	<5.8
1,1,1-Trichloroethane	1,670	<5.8	<6.2	<5.9	<6.0	<6.3	<5.7	**110**
1,1,2-Trichloroethane	3.34	<5.8	<6.2	<5.9	<6.0	**14**	**9.0**	**16**
Trichloroethene	18.3	**9.8**	**20 J**	**35**	**19**	**29**	**21**	**13,000**
Trichlorofluoromethane	31,500	<5.8	<6.2	<5.9	<6.0	<6.3	<5.7	<5.8
1,2,4-Trimethylbenzene	8,000	<5.8	<6.2	<5.9	<6.0	<6.3	<5.7	**370 J[2]**
1,3,5-Trimethylbenzene	7,000	<5.8	<6.2	<5.9	<6.0	<6.3	**6.2**	**140**
Vinyl Chloride	0.0952	<12	<12	<12	<12	<13	<12	<12
m&p-Xylene	4,960	<12	<12	<12	<12	<13	**11**	**330**
o-Xylene	4,960	<5.8	<6.2	<5.9	<6.0	<6.3	<5.7	**110**
TPH-Diesel (mg/kg) USEPA Methods 8015	10	NS	NS	NS	NS	NS	NS	NS
Percent Solids (%)		85.0	80.1	85.4	83.7	79.9	87.3	85.9

Table 5-1. Summary of Soil Sample Analytical Results, August 22-23, 2001 and April 18-19, 2002 Soil Sampling Events, Brenntag Southeast Facility (Former Worth Chemical Facility), Durham, North Carolina.

	Sample Location:	GP-38	GP-39	GP-40	GP-43	HA-1	HA-2	HA-3
	Laboratory ID:	922218771	922218789	922218797	922218805	921781415	921781423	921781431
	Depth Interval (ft bls):	7-8	5.5-6.5	5.5-7	1-2	3.5-4.5	1.0-2.0	2.0-3.0
	Date Sampled:	4/19/2002	4/19/2002	4/19/2002	4/19/2002	8/23/2001	8/23/2001	8/23/2001
Constituents	Soil-to-Groundwater MSCC							
Volatile Organics (ug/kg)								
USEPA Methods 8260								
Acetone	2,810	<5,500	<110	<120	<120	<120	<110	<6,300 J[1]
Benzene	5.6	<5.5	<5.4	<6.2	<6.1	<5.8	<5.7	<6.3 J[1]
2-Butanone (MEK)	690	<5,500	<110	<120	<120	<120	<110	<130 J[1]
n-Butylbenzene	4,000	<5.5	<5.4	<6.2	<6.1	<5.8	<5.7	<6.3 J[1]
sec-Butylbenzene	3,000	<5.5	<5.4	<6.2	<6.1	<5.8	<5.7	<6.3 J[1]
Carbon Disulfide	4,000	<5.5	<5.4	<6.2	<6.1	<5.8	<5.7	<6.3 J[1]
Carbon Tetrachloride	2.7	<5.5	<5.4	<6.2	<6.1	<5.8	<5.7	<6.3 J[1]
Chlorobenzene	438	<5.5	<5.4	<6.2	<6.1	<5.8	<5.7	<6.3 J[1]
Chloroform	1.01	<5.5	<5.4	<6.2	<6.1	<5.8	<5.7	<6.3 J[1]
2-Chlorotoluene		<5.5	<5.4	<6.2	<6.1	<5.8	<5.7	**56** J[1]
4-Chlorotoluene		<5.5	<5.4	<6.2	<6.1	<5.8	<5.7	**13** J[1]
1,2-Dichlorobenzene	7,270	<5.5	<5.4	<6.2	<6.1	<5.8	<5.7	**160** J[1]
1,3-Dichlorobenzene	24,000	<5.5	<5.4	<6.2	<6.1	<5.8	<5.7	<6.3 J[1]
1,4-Dichlorobenzene	1,240	<5.5	<5.4	<6.2	<6.1	<5.8	<5.7	**27** J[1]
1,1-Dichloroethane	3,820	<5.5	<5.4	<6.2	<6.1	<5.8	<5.7	**110** J[1]
1,2-Dichloroethane	1.84	<5.5	<5.4	<6.2	<6.1	<5.8	<5.7	<6.3 J[1]
1,1-Dichloroethene	44.5	<5.5	<5.4	<6.2	<6.1	<5.8	<5.7	**3,600** J[1,2]
cis-1,2-Dichloroethene	350	<5.5	<5.4	<6.2	<6.1	**22**	<5.7	**150** J[1]
trans-1,2-Dichloroethene	380	<5.5	<5.4	<6.2	<6.1	<5.8	<5.7	<6.3 J[1]
1,2-Dichloropropane	2.88	<5.5	<5.4	<6.2	<6.1	<5.8	<5.7	<6.3 J[1]
Ethylbenzene	241	<5.5	<5.4	<6.2	**8.2**	<5.8	<5.7	**73** J[1]
Isopropylbenzene	2,000	<5.5	<5.4	<6.2	<6.1	<5.8	<5.7	<6.3 J[1]
p-Isopropyltoluene		<5.5	<5.4	<6.2	<6.1	<5.8	<5.7	<6.3 J[1]
4-Methyl-2-Pentanone (MIBK)	2,280	<2,700	<54	<62	<61	<58	<57	<63 J[1]
Methylene Chloride	22	<5.5	**5.6 U[B]**	**12 U[B]**	**8.4 U[B]**	<5.8	<5.7	<6.3 J[1]
Naphthalene	585	**28**	<5.4	<6.2	<6.1	<5.8	**20**	**19** J[1]
n-Propylbenzene	2,000	<5.5	<5.4	<6.2	<6.1	<5.8	<5.7	<6.3 J[1]
Styrene		<5.5	<5.4	<6.2	**7.3**	<5.8	<5.7	<6.3 J[1]
1,1,1,2-Tetrachloroethane		<5.5	<5.4	<6.2	<6.1	<5.8	<5.7	<6.3 J[1]
1,1,2,2-Tetrachloroethane	0.953	<5.5	<5.4	<6.2	<6.1	<5.8	<5.7	<6.3 J[1]
Tetrachloroethene	7.42	**28**	<5.4	**12**	**23**	**68**	<5.7	**7,300** J[3]
Toluene	7,270	<5.5	<5.4	<6.2	**12**	<5.8	<5.7	**3,600** J[1,2]
1,2,3-Trichlorobenzene		<5.5	<5.4	<6.2	<6.1	<5.8	<5.7	<6.3 J[1]
1,2,4-Trichlorobenzene	2,610	<5.5	<5.4	<6.2	<6.1	<5.8	<5.7	**20** J[1]
1,1,1-Trichloroethane	1,670	<5.5	<5.4	<6.2	<6.1	<5.8	<5.7	**14,000** D
1,1,2-Trichloroethane	3.34	<5.5	<5.4	<6.2	<6.1	<5.8	<5.7	<6.3 J[1]
Trichloroethene	18.3	<5.5	<5.4	<6.2	**33**	**80**	<5.7	**9,800** D
Trichlorofluoromethane	31,500	<5.5	<5.4	<6.2	<6.1	<5.8	<5.7	<6.3 J[1]
1,2,4-Trimethylbenzene	8,000	<5.5	<5.4	<6.2	<6.1	<5.8	<5.7	**27** J[1]
1,3,5-Trimethylbenzene	7,000	<5.5	<5.4	<6.2	<6.1	<5.8	<5.7	**7.5** J[1]
Vinyl Chloride	0.0952	<11	<11	<12	<12	<12	<11	<13 J[1]
m&p-Xylene	4,960	<11	<11	<12	**13**	<12	<11	**220** J[1]
o-Xylene	4,960	<5.5	<5.4	<6.2	**8.4**	**14**	<5.7	**63** J[1]
TPH-Diesel (mg/kg)								
USEPA Methods 8015	10	NS	NS	NS	NS	NS	NS	NS
Percent Solids (%)		91.5	92.1	80.2	82.1	80.7	81.0	79.0

Table 5-1. Summary of Soil Sample Analytical Results, August 22-23, 2001 and April 18-19, 2002 Soil Sampling Events, Brenntag Southeast Facility (Former Worth Chemical Facility), Durham, North Carolina.

	Sample Location:	HA-4	HA-5
	Laboratory ID:	922218813	922218821
	Depth Interval (ft bls):	2-3	0-1
	Date Sampled:	4/19/2002	4/19/2002
Constituents	Soil-to-Groundwater MSCC		
Volatile Organics (ug/kg)			
USEPA Methods 8260			
Acetone	2,810	<120	<130
Benzene	5.6	<6.2	<6.4
2-Butanone (MEK)	690	<120	<130
n-Butylbenzene	4,000	<6.2	<6.4
sec-Butylbenzene	3,000	<6.2	<6.4
Carbon Disulfide	4,000	<6.2	<6.4
Carbon Tetrachloride	2.7	<6.2	<6.4
Chlorobenzene	438	<6.2	<6.4
Chloroform	1.01	<6.2	<6.4
2-Chlorotoluene		<6.2	<6.4
4-Chlorotoluene		<6.2	<6.4
1,2-Dichlorobenzene	7,270	<6.2	<6.4
1,3-Dichlorobenzene	24,000	<6.2	<6.4
1,4-Dichlorobenzene	1,240	<6.2	<6.4
1,1-Dichloroethane	3,820	<6.2	<6.4
1,2-Dichloroethane	1.84	<6.2	<6.4
1,1-Dichloroethene	44.5	<6.2	<6.4
cis-1,2-Dichloroethene	350	<6.2	<6.4
trans-1,2-Dichloroethene	380	<6.2	<6.4
1,2-Dichloropropane	2.88	<6.2	<6.4
Ethylbenzene	241	**19**	**8.4**
Isopropylbenzene	2,000	<6.2	<6.4
p-Isopropyltoluene		<6.2	<6.4
4-Methyl-2-Pentanone (MIBK)	2,280	<62	<64
Methylene Chloride	22	**6.7 U[B]**	**8.9 U[B]**
Naphthalene	585	<6.2	<6.4
n-Propylbenzene	2,000	<6.2	<6.4
Styrene		<6.2	<6.4
1,1,1,2-Tetrachloroethane		<6.2	<6.4
1,1,2,2-Tetrachloroethane	0.953	<6.2	<6.4
Tetrachloroethene	7.42	**52**	**10**
Toluene	7,270	<6.2	<6.4
1,2,3-Trichlorobenzene		<6.2	<6.4
1,2,4-Trichlorobenzene	2,610	<6.2	<6.4
1,1,1-Trichloroethane	1,670	<6.2	<6.4
1,1,2-Trichloroethane	3.34	<6.2	<6.4
Trichloroethene	18.3	**120**	**12**
Trichlorofluoromethane	31,500	<6.2	<6.4
1,2,4-Trimethylbenzene	8,000	<6.2	<6.4
1,3,5-Trimethylbenzene	7,000	<6.2	<6.4
Vinyl Chloride	0.0952	<12	<13
m&p-Xylene	4,960	**27**	<13
o-Xylene	4,960	**25**	<6.4
TPH-Diesel (mg/kg)			
USEPA Methods 8015	10	NS	NS
Percent Solids (%)		80.5	77.6

Table 5-1. Summary of Soil Sample Analytical Results, August 22 and 23, 2001 and April 18-19, 2002 Soil Sampling Events, Bremtag Southeast Facility (Former Worth Chemical Facility), Durham, North Carolina.

ug/kg	Micrograms per kilogram on a dry weight basis.
mg/kg	Milligrams per kilogram on a dry weight basis.
170	Concentration of constituent.
NS	Not sampled.
MSCC	Maximum Soil Contaminant Concentration.
TPH	Total Petroleum Hydrocarbons.
230	Concentration of constituent exceeds the respective Soil-to-Groundwater MSCC.
D	Sample was run at a diluted level.
J	Constituent concentration is qualified as estimated.
U^B	Constituent concentration is undetected due to blank contamination.
1	Surrogate recovery was outside of QC acceptance limits.
2	Instrument calibration was exceeded.
3	Sample duplicate RPD was outside acceptance limits.

Table 5-2. Groundwater Field Parameter Data Collected During the June 11 to 12 and July 3, 2002 Sampling Events, Brenntag Southeast Facility (Former Worth Chemical Facility), Durham, North Carolina.

Well Number	Date Sampled	Gallons per Well Volume	Gallons Purged	Temperature (Degrees Celsius)	pH	Specific Conductance (umhos)	Dissolved Oxygen (mg/L)	Oxidation-Reduction Potential (mV)	Turbidity (NTUs)
MW-1	6/12/2002	2.7	8.0	19.60	6.92	769	0.15	191	8.64
MW-2	6/12/2002	2.2	6.6	20.39	6.13	960	0.11	-99	1.70
MW-3	6/12/2002	1.7	5.0	19.83	5.43	508	0.13	177	3.74
MW-4	6/12/2002	2.3	7.0	19.98	6.91	896	0.12	-29	3.44
MW-5	6/12/2002	0.7	2.1	19.59	6.55	1,370	0.12	-107	1.50
MW-6	6/11/2002	2.9	8.6	17.88	6.68	701	2.83	97	4.80
MW-7	6/12/2002	3.1	9.3	18.95	6.07	491	5.48	169	4.17
MW-8D	7/3/2002	0.8	2.0	18.1	9.55	674	NA	NA	NA
MW-9	6/11/2002	2.4	7.2	19.36	6.88	639	0.22	42	1.75
MW-10	6/11/2002	2.5	7.5	18.97	7.05	765	0.18	80	5.11
MW-11	6/11/2002	3.5	10.5	18.49	7.12	614	0.95	138	9.41

umhos Microohms per centimeter.
mg/L Milligrams per liter.
mV Millivolts.
NTU Nephelometric Turbidity Units.

Table 5-3. Summary of Groundwater Sample Analytical Results, October 12, 2001 and June 11-12, 2002 Sampling Events, Brenntag Southeast Facility (Former Worth Chemical Facility), Durham, North Carolina.

	Sample Location:	MW-1	MW-1	MW-2	MW-2	MW-3	MW-3
	Laboratory ID:	921871638	922322417	921871646	922322425	921871653	922322433
	Date Sampled:	10/12/2001	6/12/2002	10/12/2001	6/12/2002	10/12/2001	6/12/2002
Constituents	NCAC 2L Standard						
Volatile Organics (ug/L)							
USEPA Method 8260							
Acetone	700	<100	<100	<10,000	<50,000	**920 J[1,2]**	<10,000
Benzene	1.0	<5.0	<5.0	**110 J[1,2]**	<2,500	<5.0	<500
Carbon Tetrachloride	0.3	<5.0	<5.0	<5.0	<2,500	**100 J[2]**	<500
Chloroform	0.19	<5.0	**8.2**	**560** D	<2,500	**34 J[2]**	<500
1,2-Dichlorobenzene	620	<5.0	<5.0	**17 J[2]**	<2,500	<5.0	<500
1,1-Dichloroethane	700	<5.0	<5.0	**110 J[2]**	<2,500	**8.1 J[2]**	<500
1,2-Dichloroethane	0.38	<5.0	<5.0	**20 J[2]**	<2,500	<5.0	<500
1,1-Dichloroethene	7.0	<5.0	<5.0	**920** D	<2,500	**270 J[1,2]**	**1,700**
cis-1,2-Dichloroethene	70	<5.0	<5.0	**80,000** D	**88000 D**	**37 J[2]**	<500
trans-1,2-Dichloroethene	70	<5.0	<5.0	**230 J[1,2]**	<2,500	<5.0	<500
1,2-Dichloropropane	0.56	<5.0	<5.0	**1,200** D	<2,500	<5.0	<500
Ethylbenzene	29	<5.0	<5.0	**3,800** D	**2,600**	<5.0	<500
Isopropylbenzene	70 *	<5.0	<5.0	**60 J[2]**	<2,500	<5.0	<500
4-Methyl-2-Pentanone (MIBK)	NA	<50	<50	**5,000** D	<25,000	<50	<5,000
Methylene Chloride	5.0	<5.0	<5.0	**530** D	<2,500	**96 J[2]**	<500
Naphthalene	21	<5.0	<5.0	**15 J[2]**	<2,500	**5.7 J[2]**	<500
n-Propylbenzene	70 *	<5.0	<5.0	**11 J[2]**	<2,500	<5.0	<500
Tetrachloroethene	0.7	<5.0	**15 J**	**6,800** D	**5800 J**	**570 J[1,2]**	**3100 J**
Toluene	1,000	<5.0	<5.0	**6,500** D	<2,500	**21 J[2]**	<500
1,1,1-Trichloroethane	200	<5.0	<5.0	<5.0	<2,500	<5.0	<500
1,1,2-Trichloroethane	NA	<5.0	<5.0	**190 J[2]**	<2,500	**11 J[2]**	<500
Trichloroethene	2.8	<5.0	**7.0**	**110,000** D	**54,000**	**22,000** D	**77000 D**
1,2,4-Trimethylbenzene	350 *	<5.0	<5.0	**33 J[2]**	<2,500	<5.0	<500
1,3,5-Trimethylbenzene	350 *	<5.0	<5.0	**35 J[2]**	<2,500	<5.0	<500
Vinyl Chloride	0.015	<10	<10	**47 J[2]**	<5,000	<10	<500
m&p-Xylene	530	<10	<10	**14,000** D	**7,100**	<10	<1,000
o-Xylene	530	<5.0	<5.0	**5,400** D	<2,500	<5.0	<500
Semi-Volatile Organics (ug/L)							
USEPA Method 8270							
3&4-Methylphenol (m-&p-Cresol)	35	<12	NS	**23 J[2]**	NS	<11	NS

ug/L	Micrograms per liter.	J	Constituent concentration is qualified as estimated.
170	Detected Constituent concentration.	D	Constituent concentration was quantitated using a secondary dilution.
NA	No standard.	R	Constituent concentration is qualified as rejected/unusable.
	Concentration exceeded NCAC 2L Standard.	1	Constituent concentration exceeds the instrument calibration range.
*	Interim maximum allowable concentration.	2	Surrogate recovery was outside of QC acceptance limits.
		3	Constituent detected below the reporting limit.

Table 5-3. Summary of Groundwater Sample Analytical Results, October 12, 2001 and June 11-12, 2002 Sampling Events, Brenntag Southeast Facility (Former Worth Chemical Facility), Durham, North Carolina.

	Sample Location:	MW-4	MW-4	MW-5	MW-5	MW-6	MW-7
	Laboratory ID:	921871661	922322441	921871679	922322458	922322466	922322474
	Date Sampled:	10/12/2001	6/12/2002	10/12/2001	6/12/2002	6/11/2002	6/12/2002
Constituents	NCAC 2L Standard						
Volatile Organics (ug/L) USEPA Method 8260							
Acetone	700	<100	<100	270	<50,000	<100	<5,000
Benzene	1.0	220 J[3],D	23 J	6.2	<2,500	<5.0	<250
Carbon Tetrachloride	0.3	260 J[3],D	400 J[1]	<5.0	<2,500	<5.0	<250
Chloroform	0.19	210 J[1,2]	270 J[1]	3,400 D	55,000	16	350
1,2-Dichlorobenzene	620	<5.0	<5.0	<5.0	<2,500	<5.0	<250
1,1-Dichloroethane	700	53 J[2]	70	69	<2,500	<5.0	<250
1,2-Dichloroethane	0.38	12 J[2]	12	16	<2,500	<5.0	<250
1,1-Dichloroethene	7.0	590 D	1300 J[1]	360 D	12,000	73	260
cis-1,2-Dichloroethene	70	52,000 D	39000 D	200	43,000	66	2,100
trans-1,2-Dichloroethene	70	81 J[2]	620 J[1]	5.0	<2,500	<5.0	<250
1,2-Dichloropropane	0.56	470 J[3],D	650 J[1]	<5.0	<2,500	<5.0	<250
Ethylbenzene	29	<5.0	<5.0	<5.0	<2,500	<5.0	<250
Isopropylbenzene	70 *	25 J[2]	20	<5.0	<2,500	<5.0	<250
4-Methyl-2-Pentanone (MIBK)	NA	<50	<50	<50	<25,000	<50	<2,500
Methylene Chloride	5.0	12 J[2]	11	630 D	2,500	<5.0	<250
Naphthalene	21	<5.0	<5.0	<5.0	<2,500	<5.0	<250
n-Propylbenzene	70 *	<5.0	<5.0	<5.0	<2,500	<5.0	<250
Tetrachloroethene	0.7	1,100 D	2200 J[1]	1,400 D	32000 J	400 D	9,400
Toluene	1,000	210 J[1,2]	24 J	75	<2,500	<5.0	<250
1,1,1-Trichloroethane	200	<5.0	9.6	19	<2,500	<5.0	<250
1,1,2-Trichloroethane	NA	170 J[1,2]	30	49	<2,500	<5.0	<250
Trichloroethene	2.8	96,000 D	64000 J,D	2,700 D	36,000	770 D	2,100
1,2,4-Trimethylbenzene	350 *	<5.0	<5.0	<5.0	<2,500	<5.0	<250
1,3,5-Trimethylbenzene	350 *	<5.0	<5.0	<5.0	<2,500	<5.0	<250
Vinyl Chloride	0.015	<10	<10	<10	<5,000	<10	<500
m&p-Xylene	530	190 J[2]	48	<10	<5,000	<10	<500
o-Xylene	530	1,200 J[2],D	410 J	<5.0	<2,500	<5.0	<250
Semi-Volatile Organics (ug/L) USEPA Method 8270							
3&4-Methylphenol (m-&p-Cresol)	35	<10 [R[2]]	NS	<11	NS	NS	NS

ug/L	Micrograms per liter.	J	Constituent concentration is qualified as estimated.
170	Detected Constituent concentration.	D	Constituent concentration was quantitated using a secondary dilution.
NA	No standard.	R	Constituent concentration is qualified as rejected/unusable.
	Concentration exceeded NCAC 2L Standard.	1	Constituent concentration exceeds the instrument calibration range.
*	Interim maximum allowable concentration.	2	Surrogate recovery was outside of QC acceptance limits.
		3	Constituent detected below the reporting limit.

Table 5-3. Summary of Groundwater Sample Analytical Results, October 12, 2001 and June 11-12, 2002 Sampling Events, Brenntag Southeast Facility (Former Worth Chemical Facility), Durham, North Carolina.

	Sample Location:	MW-8D	MW-9	MW-10	MW-11
	Laboratory ID:	922322482	922322490	922322508	922322573
	Date Sampled:	6/12/2002	6/11/2002	6/11/2002	6/11/2002
Constituents	NCAC 2L Standard				
Volatile Organics (ug/L) USEPA Method 8260					
Acetone	700	<100	<100	<100	<100
Benzene	1.0	<5.0	<5.0	<5.0	<5.0
Carbon Tetrachloride	0.3	<5.0	<5.0	**47**	<5.0
Chloroform	0.19	<5.0	**7.0**	**340 D**	<5.0
1,2-Dichlorobenzene	620	<5.0	<5.0	<5.0	<5.0
1,1-Dichloroethane	700	<5.0	<5.0	**15**	<5.0
1,2-Dichloroethane	0.38	<5.0	**7.7**	<5.0	<5.0
1,1-Dichloroethene	7.0	<5.0	<5.0	**540 D**	**8.2**
cis-1,2-Dichloroethene	70	<5.0	**83**	**2100 D**	**7.4**
trans-1,2-Dichloroethene	70	<5.0	<5.0	<5.0	<5.0
1,2-Dichloropropane	0.56	<5.0	<5.0	<5.0	<5.0
Ethylbenzene	29	<5.0	<5.0	<5.0	<5.0
Isopropylbenzene	70 *	<5.0	<5.0	<5.0	<5.0
4-Methyl-2-Pentanone (MIBK)	NA	<50	<50	<50	<50
Methylene Chloride	5.0	<5.0	<5.0	<5.0	<5.0
Naphthalene	21	<5.0	<5.0	<5.0	<5.0
n-Propylbenzene	70 *	<5.0	<5.0	<5.0	<5.0
Tetrachloroethene	0.7	<5.0	**48**	**800 D**	**26**
Toluene	1,000	<5.0	<5.0	<5.0	<5.0
1,1,1-Trichloroethane	200	<5.0	<5.0	<5.0	<5.0
1,1,2-Trichloroethane	NA	<5.0	<5.0	**6.9**	<5.0
Trichloroethene	2.8	<5.0	**1000 D**	**1000 D**	**91**
1,2,4-Trimethylbenzene	350 *	<5.0	<5.0	<5.0	<5.0
1,3,5-Trimethylbenzene	350 *	<5.0	<5.0	<5.0	<5.0
Vinyl Chloride	0.015	<10	<10	**170**	<10
m&p-Xylene	530	<10	<10	<10	<10
o-Xylene	530	<5.0	<5.0	<5.0	<5.0
Semi-Volatile Organics (ug/L) USEPA Method 8270					
3&4-Methylphenol (m-&p-Cresol)	35	NS	NS	NS	NS

ug/L	Micrograms per liter.	J	Constituent concentration is qualified as estimated.
170	Detected Constituent concentration.	D	Constituent concentration was quantitated using a secondary d
NA	No standard.	R	Constituent concentration is qualified as rejected/unusable.
	Concentration exceeded NCAC 2L Standard.	1	Constituent concentration exceeds the instrument calibration r
*	Interim maximum allowable concentration.	2	Surrogate recovery was outside of QC acceptance limits.
		3	Constituent detected below the reporting limit.

Table 5-4. Summary of Groundwater Natural Attenuation Parameters, June 11-12, 2002 Sampling Event, Brenntag Southeast Facility (Former Worth Chemical Facility), Durham, North Carolina.

Constituents	USEPA Method	Sample I.D.: Date sampled:	MW-1 6/12/2002	MW-2 6/12/2002	MW-4 6/12/2002	MW-7 6/12/2002	MW-9 6/11/2002	MW-10 6/11/2002
Natural Attenuation Parameters								
Nitrate-N	300.0	mg/L	0.68	<0.10	<0.10	2.3	2.1	0.13
Nitrite-N	300.0	mg/L	0.12	<0.10	<0.10	<0.10	<0.10	<0.10
Chloride	300.0	mg/L	35	170	93	60	23	51
Sulfate	300.0	mg/L	36	36	11	29	38	30
Ammonia-N	350.1	mg/L	0.33	<0.10	0.14	<0.10	<0.10	<0.10
Sulfide	376.2	mg/L	<0.050	<0.050	<0.050	<0.050	<0.050	<0.050
Alkalinity	310.1	mg/L	320	260	360	130	260	350
Total Organic Carbon	SM 5310C	mg/L	7.3	21	10	6.1	7.9	3.4
Biological Oxygen Demand	405.1	mg/L	<2.0	7.6	<2.0	<2.0	<2.0	<2.0
Chemical Oxygen Demand	410.4	mg/L	<25	150	49	<25	<25	<25
Iron (Total)	200.7	mg/L	0.40	6.0	1.4	0.18	0.092	0.072
Iron (Dissolved)	200.7	mg/L	<0.050	1.4	<0.050	0.14	0.12	0.091
Manganese (Total)	200.7	mg/L	0.66	6.6	0.37	0.56	0.45	0.077
Manganese (Dissolved)	200.7	mg/L	0.53	6.3	0.33	0.55	0.45	0.071
Methane	AM20GAX	ug/L	2.1	34	8.6	3.7	1.7	4.8
Ethane	AM18	ng/L	2,700	1,200	5,400	98	64	48
Ethene	AM18	ng/L	350	6,500	18,000	180	240	1,700
Carbon Dioxide	AM20GAX	mg/L	34	230	40	84	28	23

< Constituent was not detected above the reporting limit.
mg/L Milligrams per liter.
ug/L Micrograms per liter.
ng/L Nanograms per liter.

FIGURES

Figures

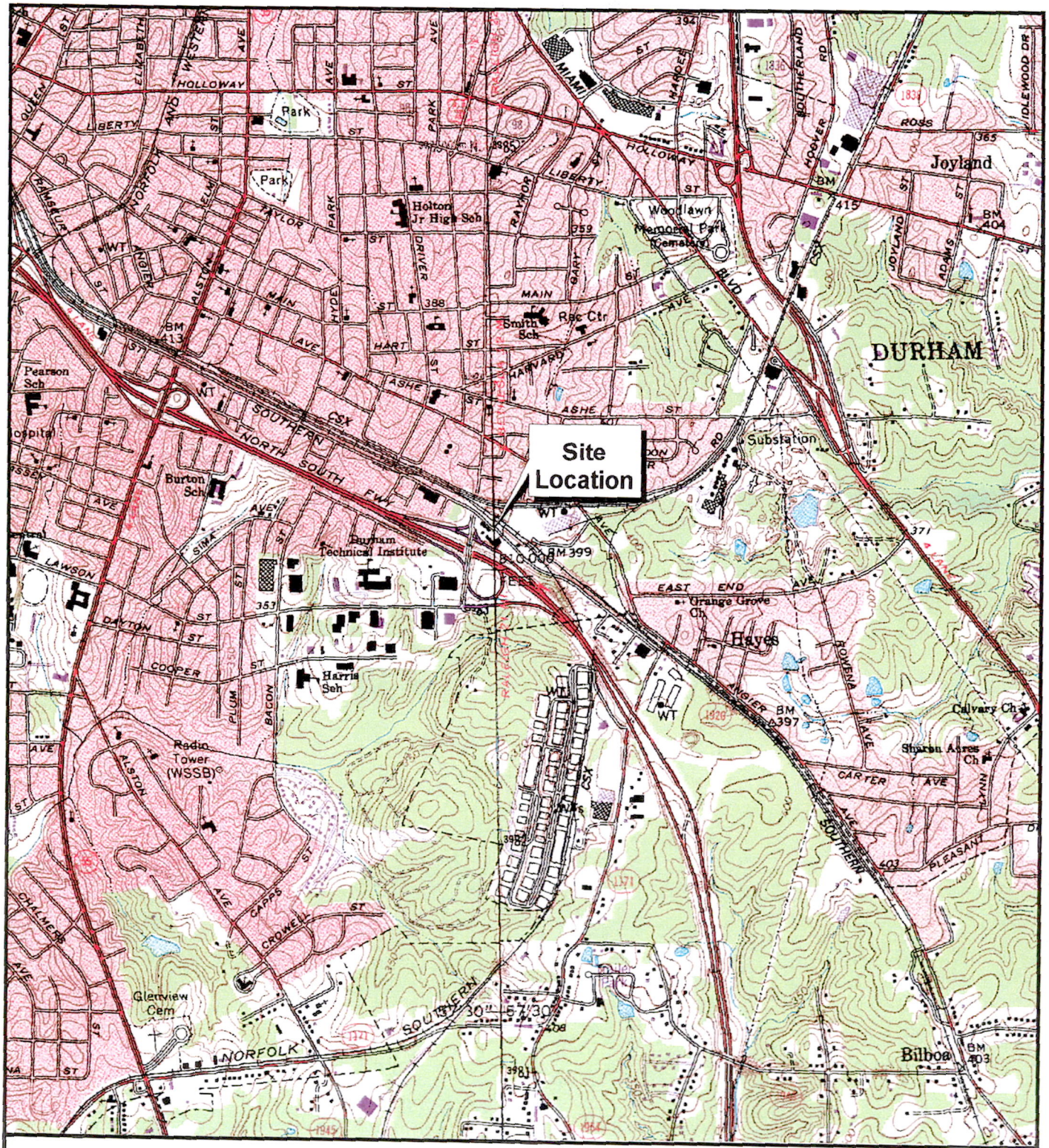

1 0 1 Miles

1000 0 1000 2000 3000 4000 5000 6000 7000 Feet

N

SCALE 1:24000
CONTOUR INTERVAL 10 FEET
SE & SW Durham - U.S.G.S. 7.5 Minute Series

PREPARED BY
ARCADIS G&M of North Carolina, Inc.
2301 Rexwoods Drive
Suite 102, Raleigh, NC 27607
Tel: 919/782-5511 Fax: 919/782-5905

PROJECT MANAGER:	DRAFTER:	PROJECT NUMBER:
J. Shilliday	K. Brothers	NC101047.0001

NOTES:

DRAWING:

DATE: 25JAN2002

Site Location

Brenntag Southeast Facility
(Former Worth Chemical)
Durham, North Carolina

FIGURE: 1-1

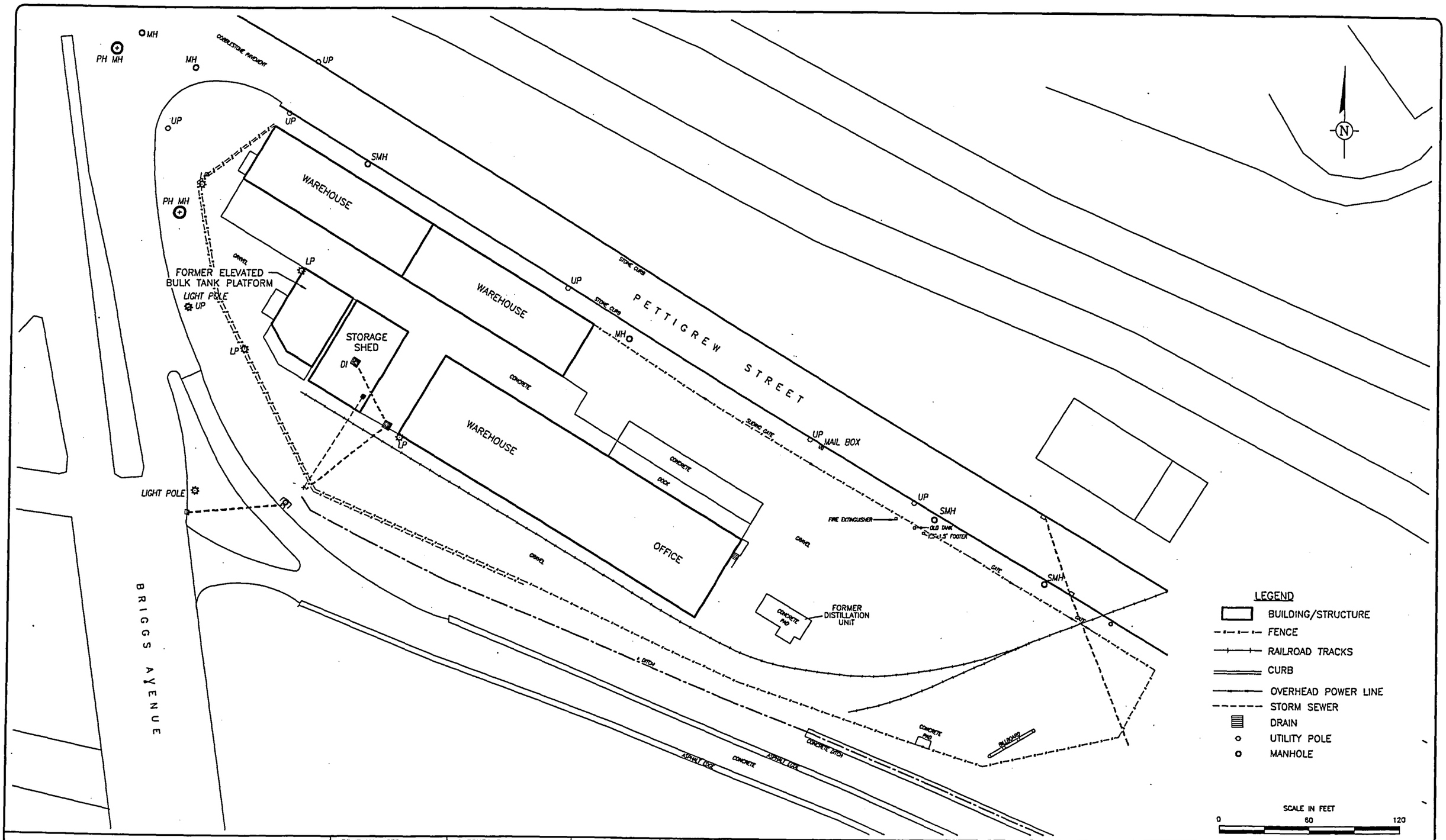

ARCADIS of North Carolina, Inc.
2301 Rexwoods Drive
Suite 102 RALEIGH, NC 27607
Tel: 919/782-5511 Fax: 919/782-5905

PRJT MANAGER: J. SHILLIDAY
CHECKED BY: D. TOMCZAK
DRAFTER: B. ALTOM
PROJECT NUMBER: NC101047.0002.00006

NOTES:
1. BASE MAP DEVELOPED BY COMBINED SURVEYING RESOURCES ON OCTOBER 30, 2001; MAP REVISED ON JULY 10, 2002.

DRAWING: WC-38094K
DATE: 22JUL02

BRENNTAG SOUTHEAST FACILITY
(FORMER WORTH CHEMICAL FACILITY)
DURHAM, NORTH CAROLINA

SITE LAYOUT

FIGURE: 1-2

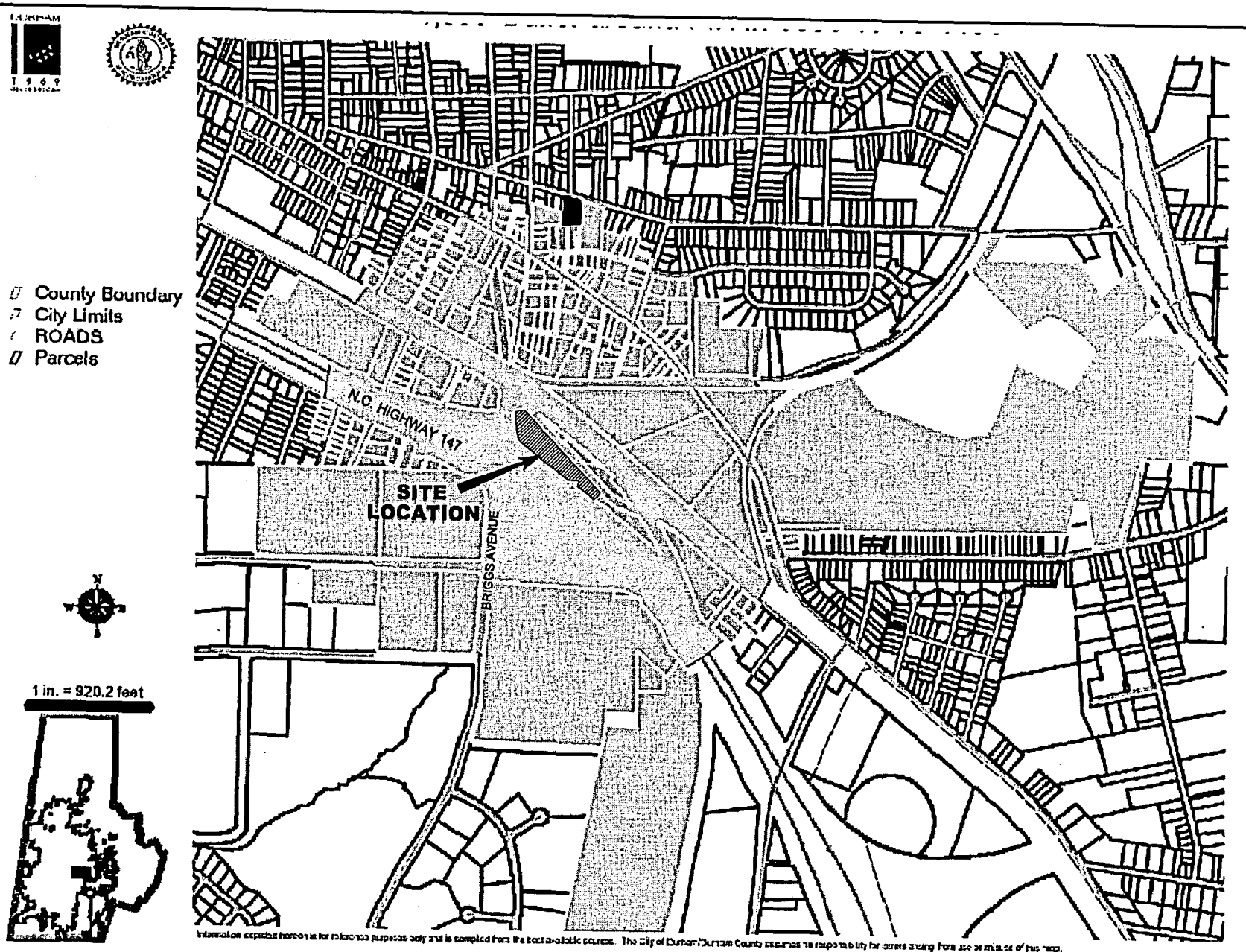

Information depicted hereon is for reference purposes only and is compiled from the best available sources. The City of Durham/Durham County assumes no responsibility for errors arising from use or misuse of this map.

ARCADIS of North Carolina, Inc.
2301 Rexwoods Drive
Suite 102 RALEIGH, NC 27607
Tel: 919/782-5511 Fax: 919/782-5905

PRJT MANAGER: J. SHILLIDAY	CHECKED BY: D. TOMCZAK
DRAWING: WC-1500	
PRJT NO: NC101047.0001	
DWG DATE: 21JUL02	DRAFTER: B. ALTOM

1,500 FT SEARCH RADIUS

BRENNTAG SOUTHEAST FACILITY
(FORMER WORTH CHEMICAL FACILITY)
DURHAM, NORTH CAROLINA

FIGURE:
2-1

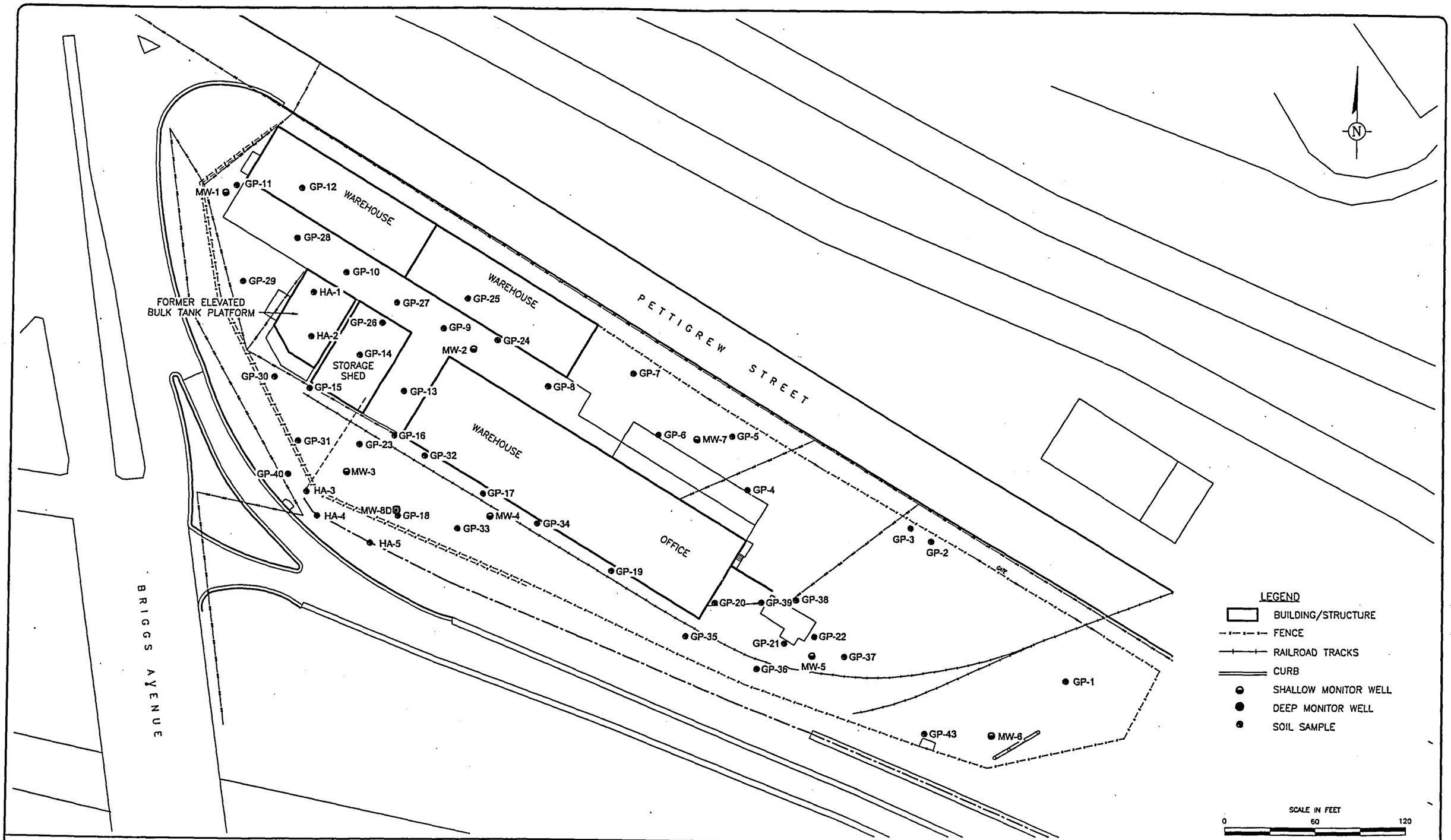

ARCADIS
of North Carolina, Inc.
2301 Rexwoods Drive
Suite 102 RALEIGH, NC 27607
Tel: 919/782-5511 Fax: 919/782-5905

PRJT MANAGER: J. SHILLIDAY
CHECKED BY: D. TOMCZAK
DRAFTER: B. ALTOM
PROJECT NUMBER: NC101047.0002.00006

NOTES:
1. BASE MAP DEVELOPED BY COMBINED SURVEYING RESOURCES ON OCTOBER 30, 2001; MAP REVISED ON JULY 10, 2002.

DRAWING: WC-38094J
DATE: 21JUL02

BRENNTAG SOUTHEAST FACILITY
(FORMER WORTH CHEMICAL FACILITY)
DURHAM, NORTH CAROLINA

SOIL BORING LOCATIONS

FIGURE: 3-1

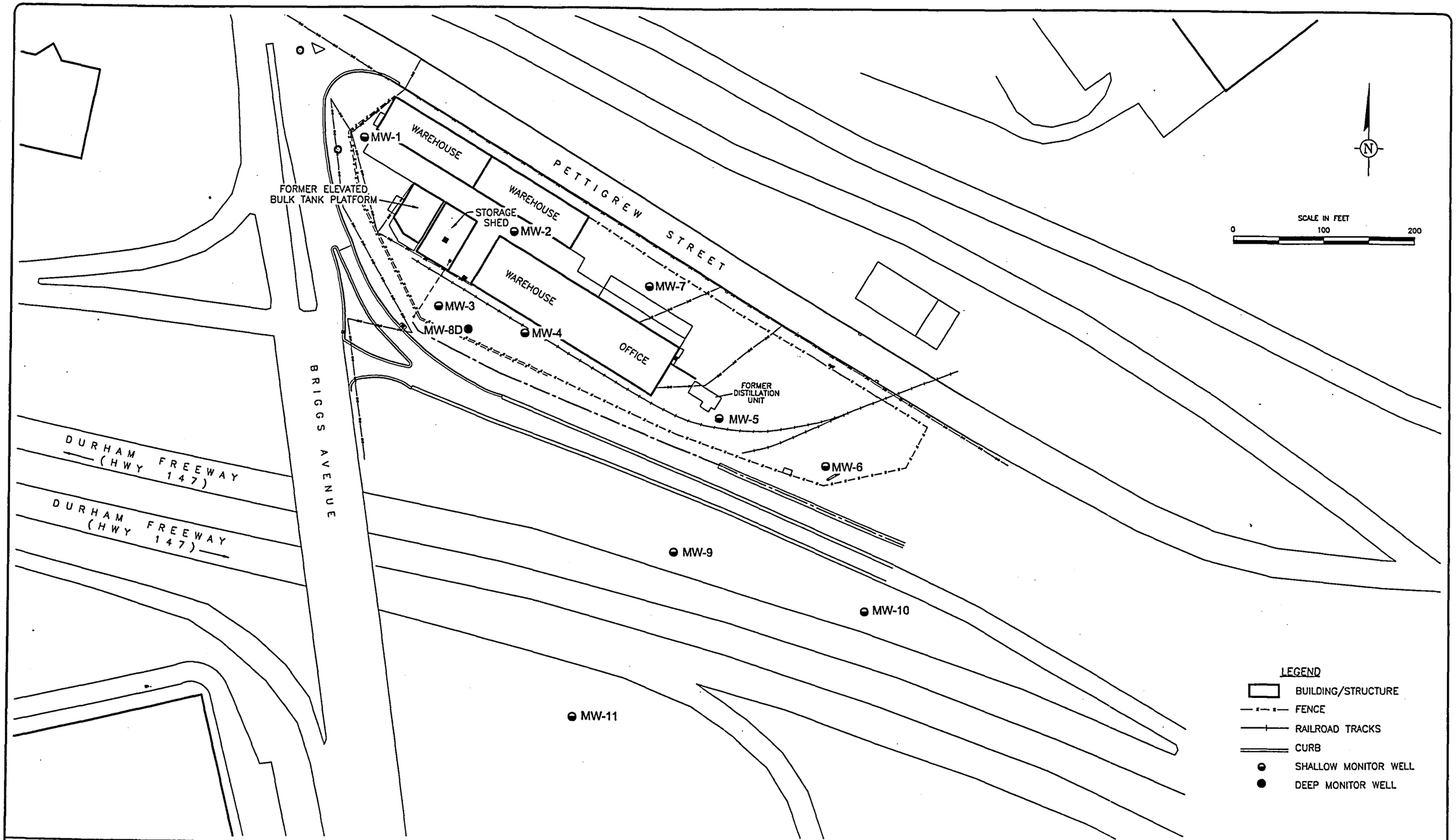

ARCADIS
of North Carolina, Inc.
2301 Rexwoods Drive
Suite 102 RALEIGH, NC 27607
Tel: 919/782-5511 Fax: 919/782-5905

PRJT MANAGER: J. SHILLIDAY
CHECKED BY: D. TOMCZAK
DRAFTER: B. ALTOM

NOTES:
1. BASE MAP DEVELOPED BY COMBINED SURVEYING RESOURCES ON OCTOBER 30, 2001; MAP REVISED ON JULY 10, 2002.

DRAWING: WC-38094H
DATE: 19JUL02

PROJECT NUMBER: NC101047.0002.00006

BRENNTAG SOUTHEAST FACILITY
(FORMER WORTH CHEMICAL FACILITY)
DURHAM, NORTH CAROLINA

MONITOR WELL LOCATIONS

FIGURE: 3-2

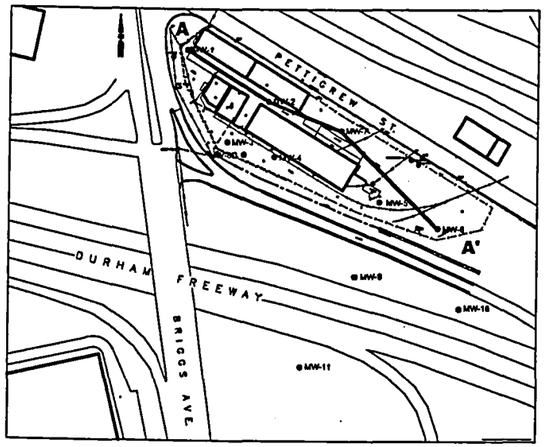

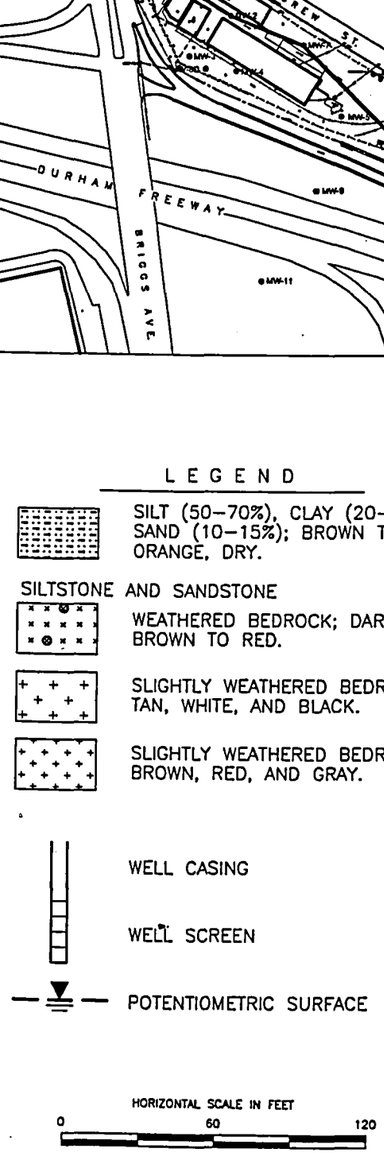

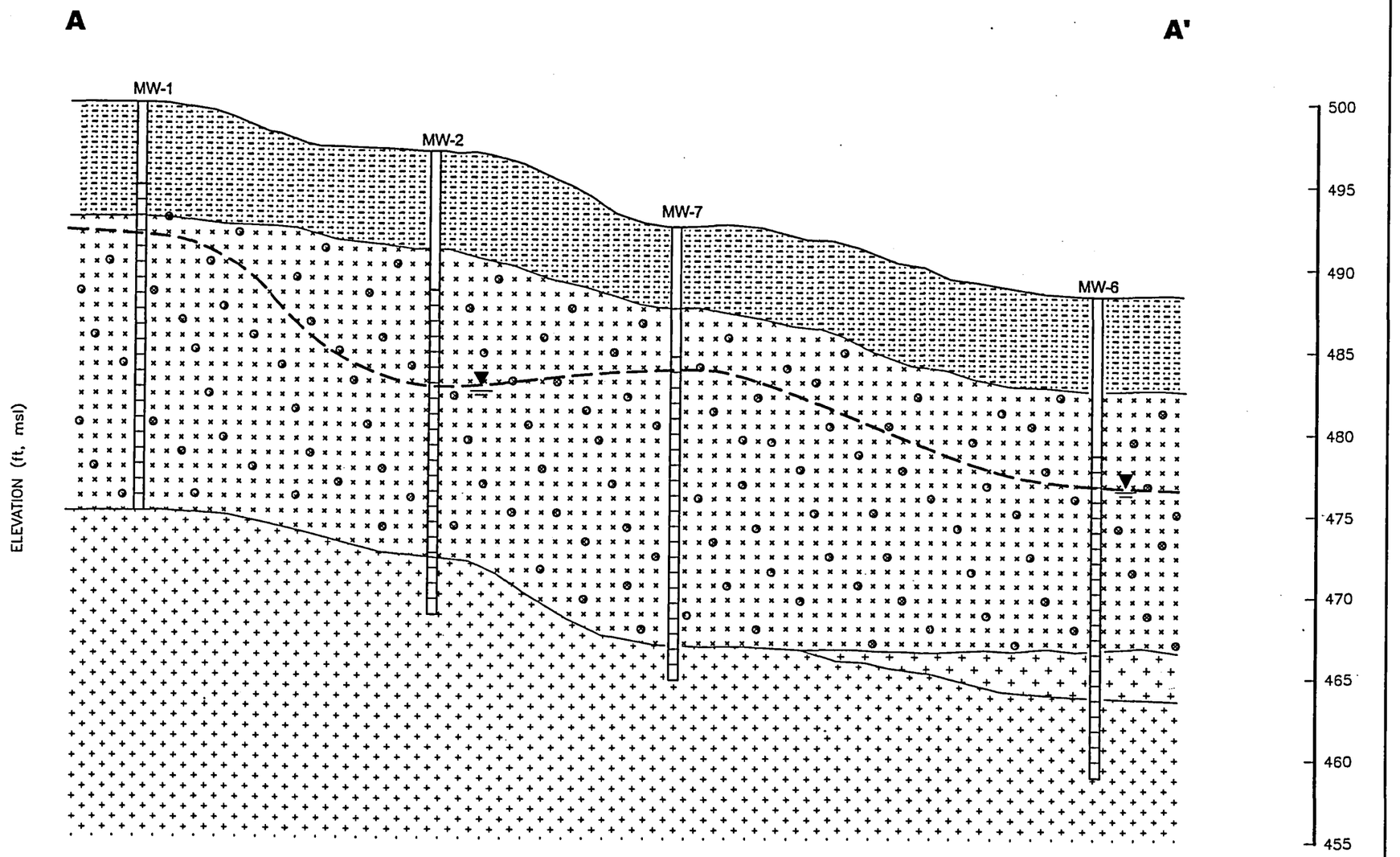

ARCADIS of North Carolina, Inc.
2301 Rexwoods Drive
Suite 102 RALEIGH, NC 27607
Tel: 919/782-5511 Fax: 919/782-5905

PRJT MANAGER: J. SHILLIDAY
CHECKED BY: D. TOMCZAK
DRAFTER: B. ALTOM

NOTES:
1. BASE MAP DEVELOPED BY COMBINED SURVEYING RESOURCES ON OCTOBER 30, 2001; MAP REVISED ON JULY 10, 2002.

DRAWING: WC-AA
DATE: 19JUL02

PROJECT NUMBER: NC101047.0002.00006

BRENNTAG SOUTHEAST FACILITY
(FORMER WORTH CHEMICAL FACILITY)
DURHAM, NORTH CAROLINA

GEOLOGICAL CROSS-SECTION A - A'

FIGURE: 4-1

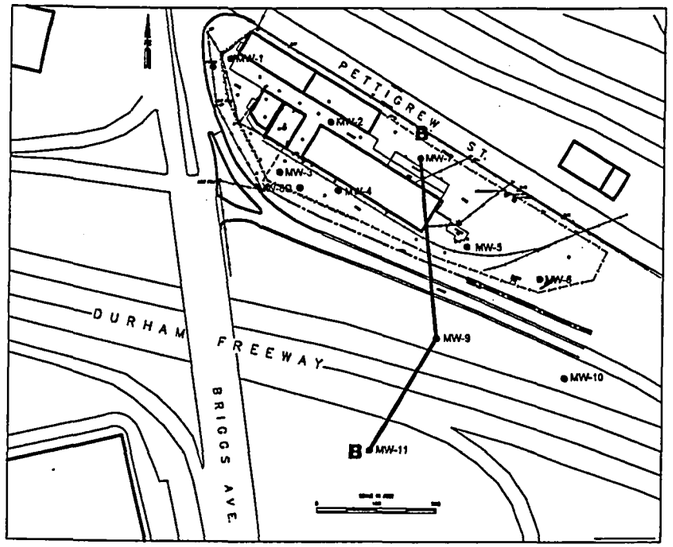

LEGEND

- SILT (50–70%), CLAY (20–40%) SAND (10–15%); BROWN TO ORANGE, DRY.
- SILT (50–70%), CLAY (20–40%) SAND (10–15%); BROWN, BLACK, AND PINK; WEATHERED BEDROCK.
- SILT (70–80%), CLAY (20–30%) BROWN AND GRAY; WEATHERED BEDROCK.
- WELL CASING
- WELL SCREEN
- POTENTIOMETRIC SURFACE

SILTSTONE AND SANDSTONE

- WEATHERED BEDROCK; DARK BROWN TO RED; MICA; STIFF.
- SLIGHTLY WEATHERED BEDROCK; BROWN, RED, AND GRAY.
- SLIGHTLY WEATHERED BEDROCK; DARK BROWN AND GRAY.
- ESTIMATED LITHOLOGIC BOUNDARY

HORIZONTAL SCALE IN FEET
0 60 120

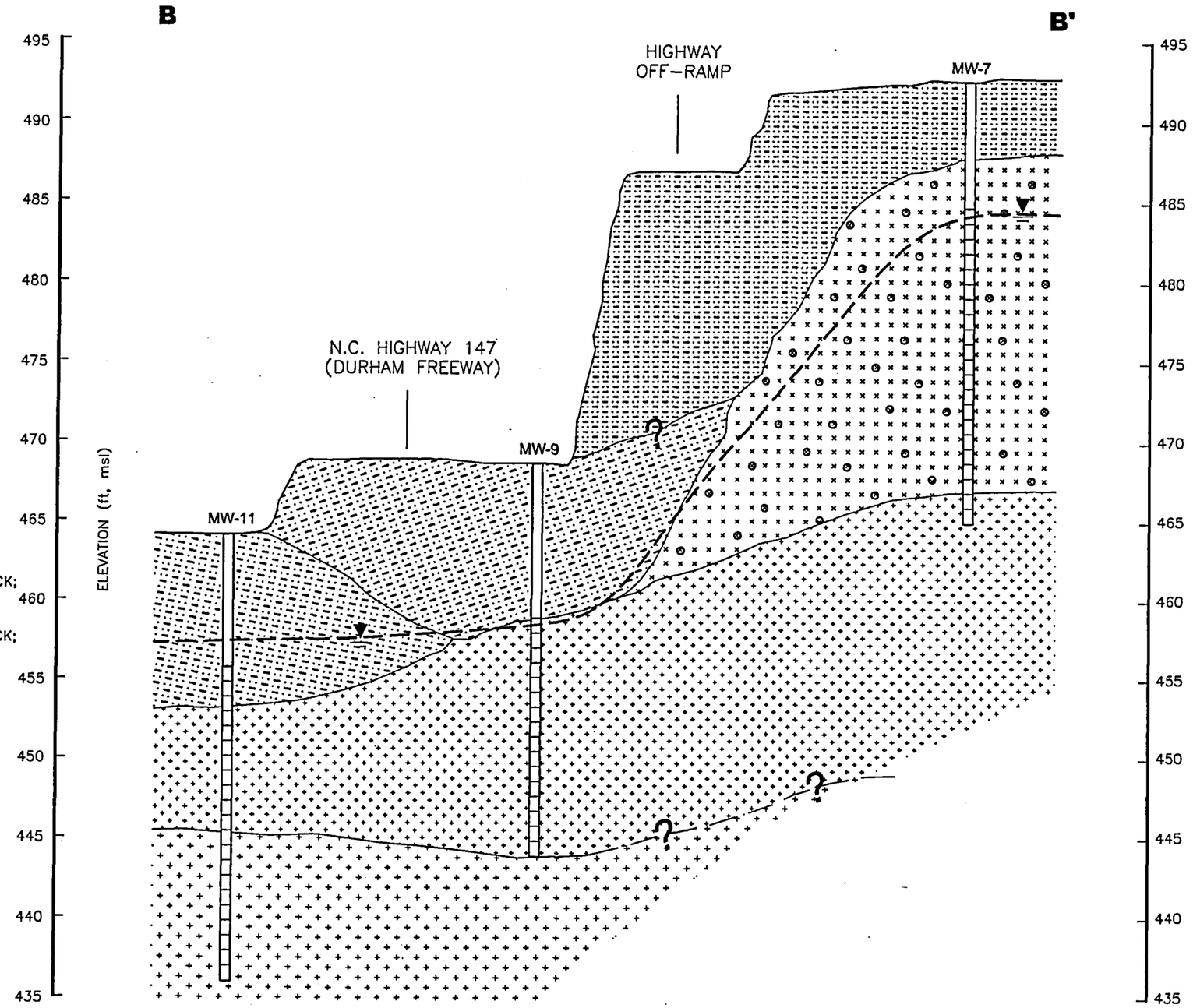

ARCADIS of North Carolina, Inc.
2301 Rexwoods Drive
Suite 102 RALEIGH, NC 27607
Tel: 919/782-5511 Fax: 919/782-5905

PRJT MANAGER: J. SHILLIDAY	CHECKED BY: D. TOMCZAK	DRAFTER: B. ALTOM	PROJECT NUMBER: NC101047.0002.00006	FIGURE: 4-2

NOTES:
1. BASE MAP DEVELOPED BY COMBINED SURVEYING RESOURCES ON OCTOBER 30, 2001; MAP REVISED ON JULY 10, 2002.

DRAWING: WC-BB

DATE: 19JUL02

BRENNTAG SOUTHEAST FACILITY
(FORMER WORTH CHEMICAL FACILITY)
DURHAM, NORTH CAROLINA

GEOLOGICAL CROSS-SECTION B - B'

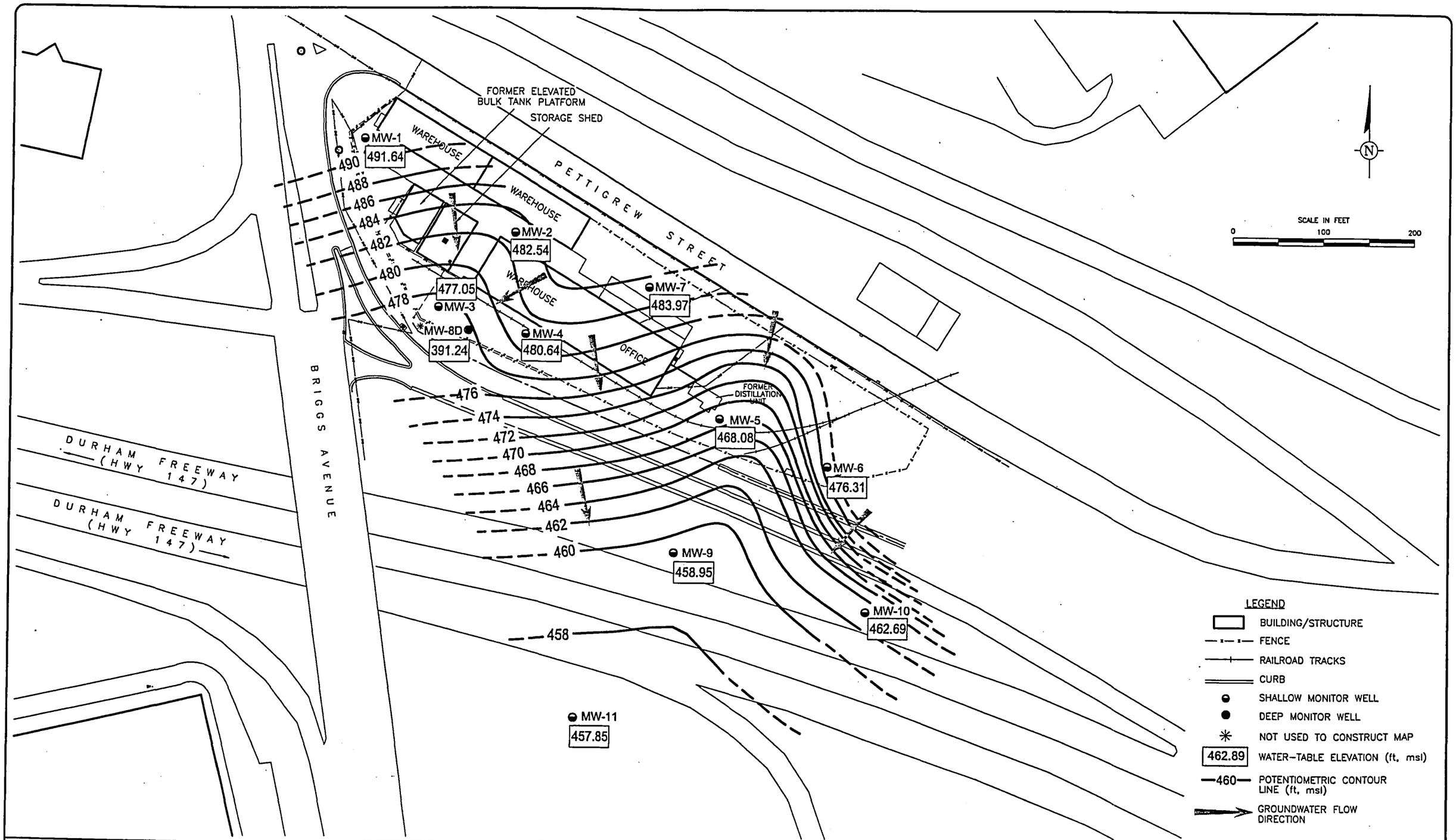

ARCADIS of North Carolina, Inc.
2301 Rexwoods Drive
Suite 102 RALEIGH, NC 27607
Tel: 919/782-5511 Fax: 919/782-5905

PRJT MANAGER: J. SHILLIDAY | CHECKED BY: D. TOMCZAK | DRAFTER: B. ALTOM

PROJECT NUMBER: NC101047.0002.00006

NOTES:
1. BASE MAP DEVELOPED BY COMBINED SURVEYING RESOURCES ON OCTOBER 30, 2001; MAP REVISED ON JULY 10, 2002.

DRAWING: WC-38094D

DATE: 19JUL02

BRENNTAG SOUTHEAST FACILITY
(FORMER WORTH CHEMICAL FACILITY)
DURHAM, NORTH CAROLINA

GROUNDWATER POTENTIOMETRIC SURFACE OF THE SHALLOW ZONE, JUNE 11, 2002

FIGURE: 4-3

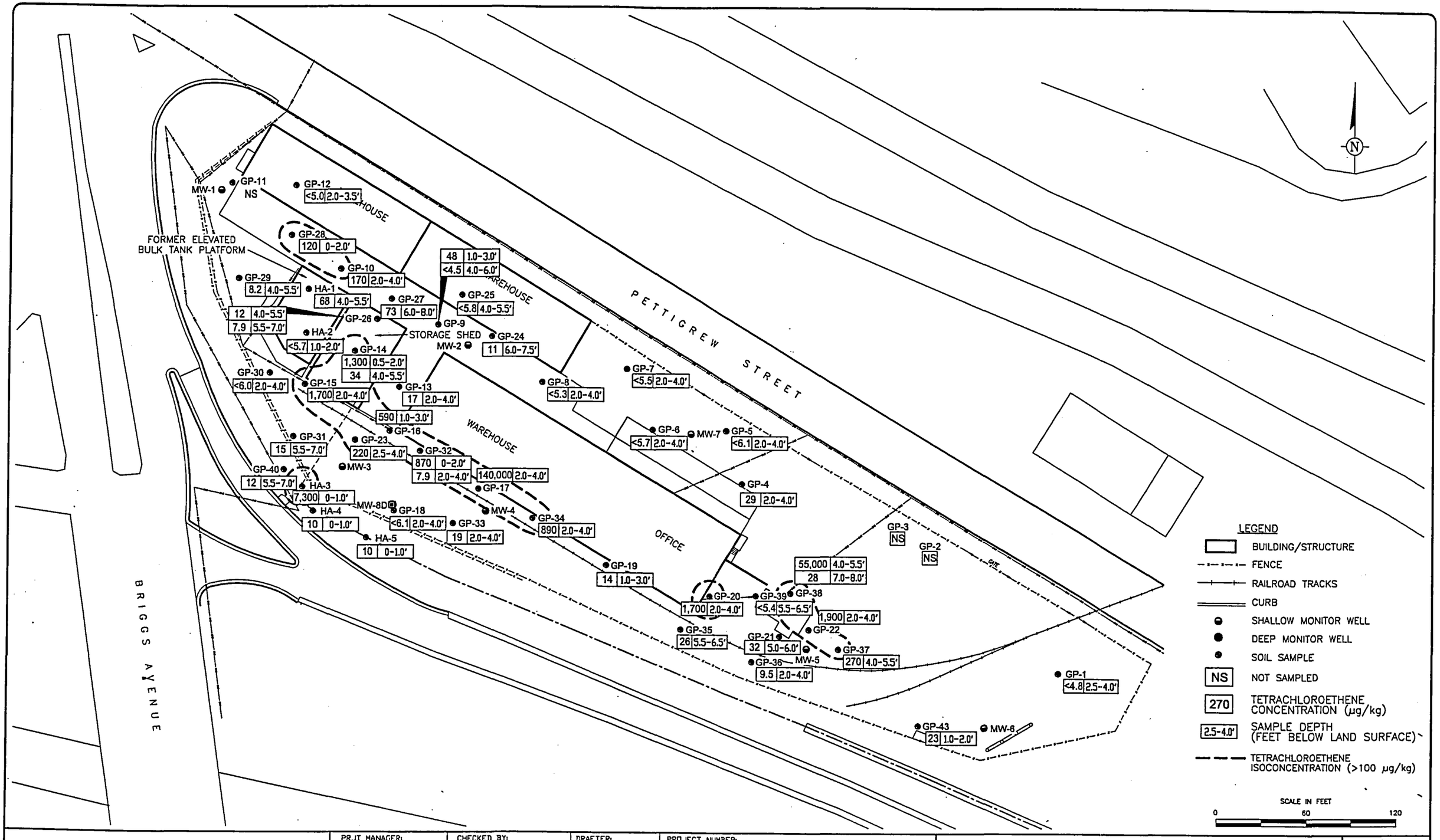

ARCADIS of North Carolina, Inc.
2301 Rexwoods Drive
Suite 102 RALEIGH, NC 27607
Tel: 919/782-5511 Fax: 919/782-5905

PRJT MANAGER: J. SHILLIDAY | CHECKED BY: D. TOMCZAK | DRAFTER: B. ALTOM

NOTES:
1. BASE MAP DEVELOPED BY COMBINED SURVEYING RESOURCES ON OCTOBER 30, 2001; MAP REVISED ON JULY 10, 2002.
2. THE SOIL TO GROUNDWATER MAXIMUM SOIL CONTAMINANT CONCENTRATION FOR TETRACHLOROETHENE IS 7.42 ug/kg (NCDENR 2000).

DRAWING: WC-38094E

DATE: 21JUL02

PROJECT NUMBER: NC101047.0002.00006

BRENNTAG SOUTHEAST FACILITY
(FORMER WORTH CHEMICAL FACILITY)
DURHAM, NORTH CAROLINA

TETRACHLOROETHENE (PCE) CONCENTRATIONS (µg/kg) IN SOIL SAMPLES, AUGUST 22-23, 2001 AND APRIL 18-19, 2002

FIGURE: 5-1

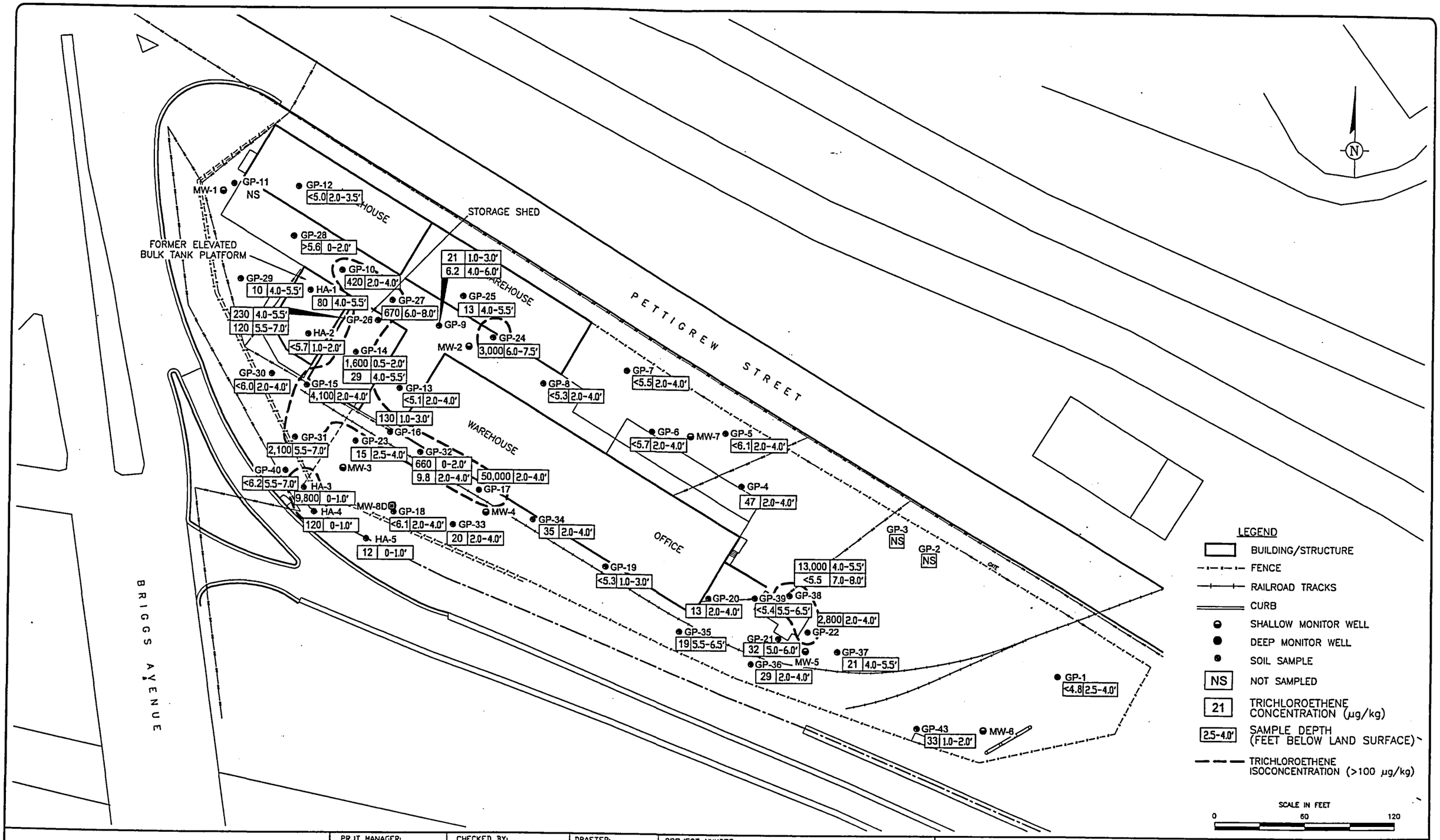

ARCADIS of North Carolina, Inc.
2301 Rexwoods Drive
Suite 102 RALEIGH, NC 27607
Tel: 919/782-5511 Fax: 919/782-5905

PRJT MANAGER: J. SHILLIDAY
CHECKED BY: D. TOMCZAK
DRAFTER: B. ALTOM
PROJECT NUMBER: NC101047.0002.00006

NOTES:
1. BASE MAP DEVELOPED BY COMBINED SURVEYING RESOURCES ON OCTOBER 30, 2001; MAP REVISED ON JULY 10, 2002.
2. THE SOIL TO GROUNDWATER MAXIMUM SOIL CONTAMINANT CONCENTRATION FOR TRICHLOROETHENE IS 18.3 ug/kg (NCDENR 2000).

DRAWING: WC-38094F
DATE: 21JUL02

BRENNTAG SOUTHEAST FACILITY
(FORMER WORTH CHEMICAL FACILITY)
DURHAM, NORTH CAROLINA

TRICHLOROETHENE (TCE) CONCENTRATIONS (µg/kg) IN SOIL SAMPLES, AUGUST 22-23, 2001 AND APRIL 18-19, 2002

FIGURE: 5-2

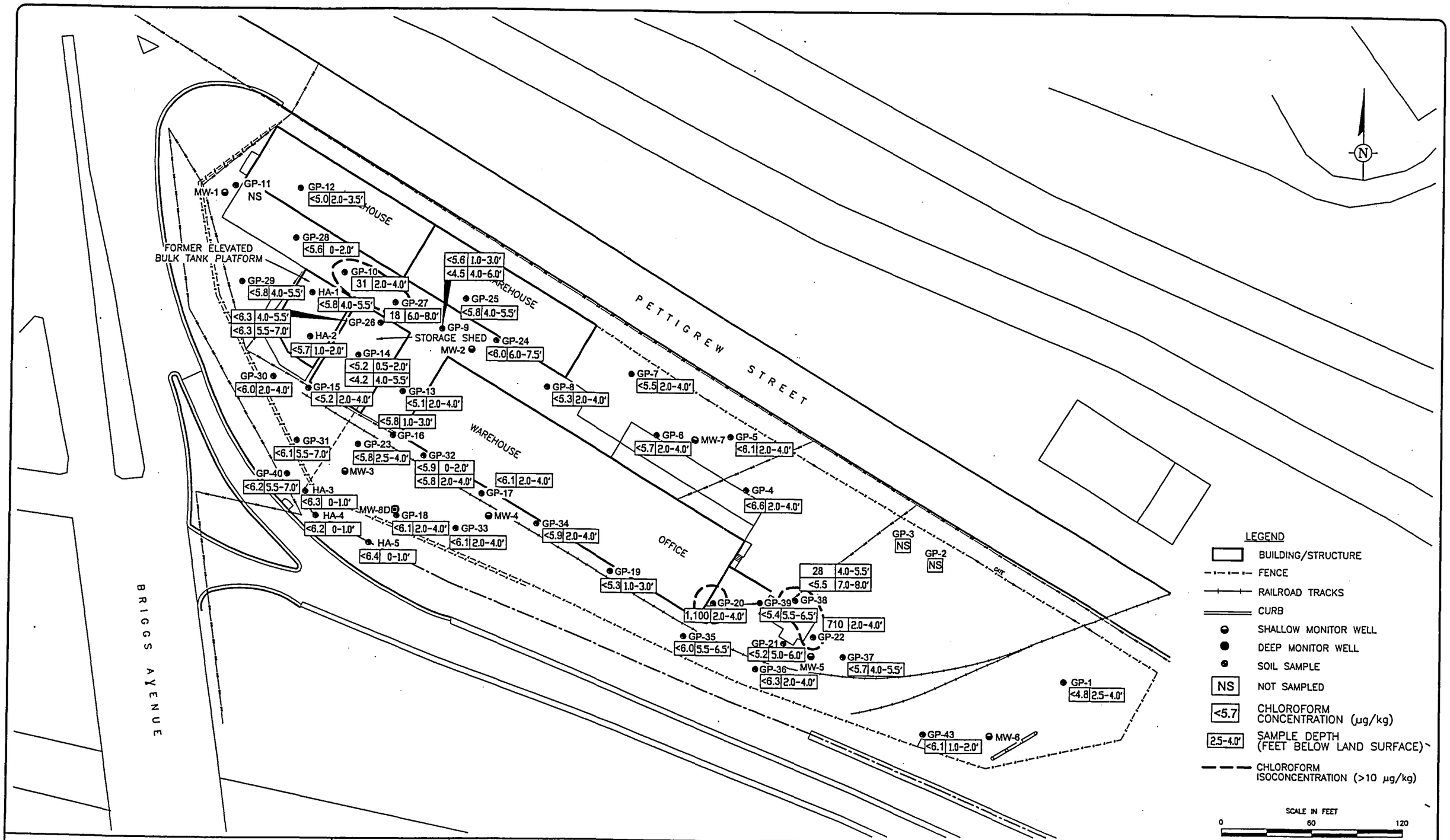

ARCADIS of North Carolina, Inc.
2301 Rexwoods Drive
Suite 102 RALEIGH, NC 27607
Tel: 919/782-5511 Fax: 919/782-5905

PRJT MANAGER: J. SHILLIDAY | CHECKED BY: D. TOMCZAK | DRAFTER: B. ALTOM

NOTES:
1. BASE MAP DEVELOPED BY COMBINED SURVEYING RESOURCES ON OCTOBER 30, 2001; MAP REVISED ON JULY 10, 2002.
2. THE SOIL TO GROUNDWATER MAXIMUM SOIL CONTAMINANT CONCENTRATION FOR CHLOROFORM IS 1.01 µg/kg (NCDENR 2000).

DRAWING: WC-38094G

DATE: 21JUL02

PROJECT NUMBER: NC101047.0002.00006

BRENNTAG SOUTHEAST FACILITY
(FORMER WORTH CHEMICAL FACILITY)
DURHAM, NORTH CAROLINA

CHLOROFORM CONCENTRATIONS (µg/kg) IN SOIL SAMPLES, AUGUST 22-23, 2001 AND APRIL 18-19, 2002

FIGURE: 5-3

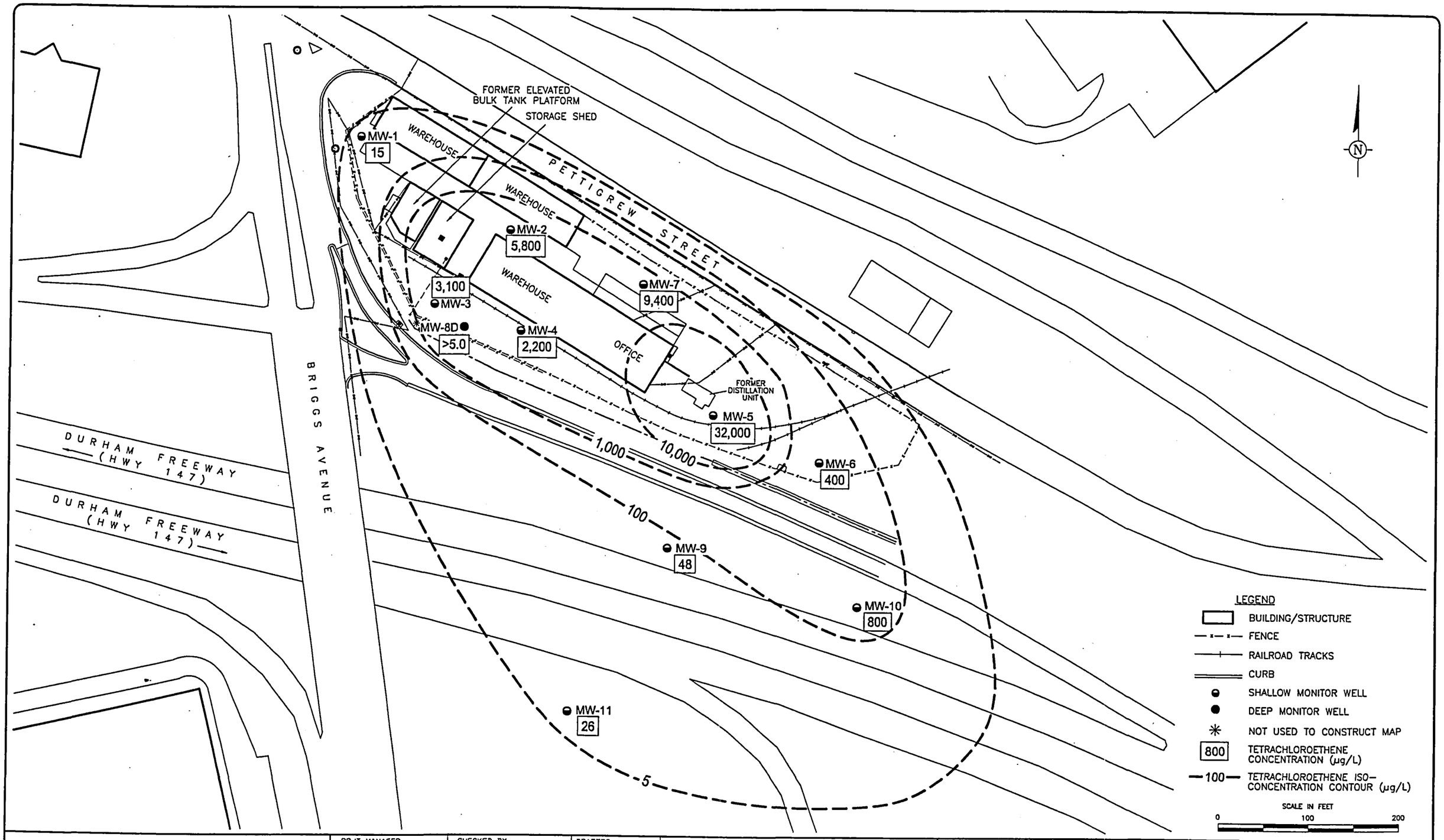

ARCADIS of North Carolina, Inc.
2301 Rexwoods Drive
Suite 102 RALEIGH, NC 27607
Tel: 919/782-5511 Fax: 919/782-5905

PRJT MANAGER: J. SHILLIDAY | CHECKED BY: D. TOMCZAK | DRAFTER: B. ALTOM | PROJECT NUMBER: NC101047.0002.00006

NOTES:
1. BASE MAP DEVELOPED BY COMBINED SURVEYING RESOURCES ON OCTOBER 30, 2001; MAP REVISED ON JULY 10, 2002.
2. NORTH CAROLINA 2L GROUNDWATER STANDARD FOR TETRACHLOROETHENE IS 0.7 µg/L.

DRAWING: WC-38094A

DATE: 19JUL02

BRENNTAG SOUTHEAST FACILITY
(FORMER WORTH CHEMICAL FACILITY)
DURHAM, NORTH CAROLINA

TETRACHLOROETHENE (PCE) ISOCONCENTRATION (µg/L) CONTOUR MAP IN GROUNDWATER, JUNE 11-12, 2002

FIGURE: 5-4

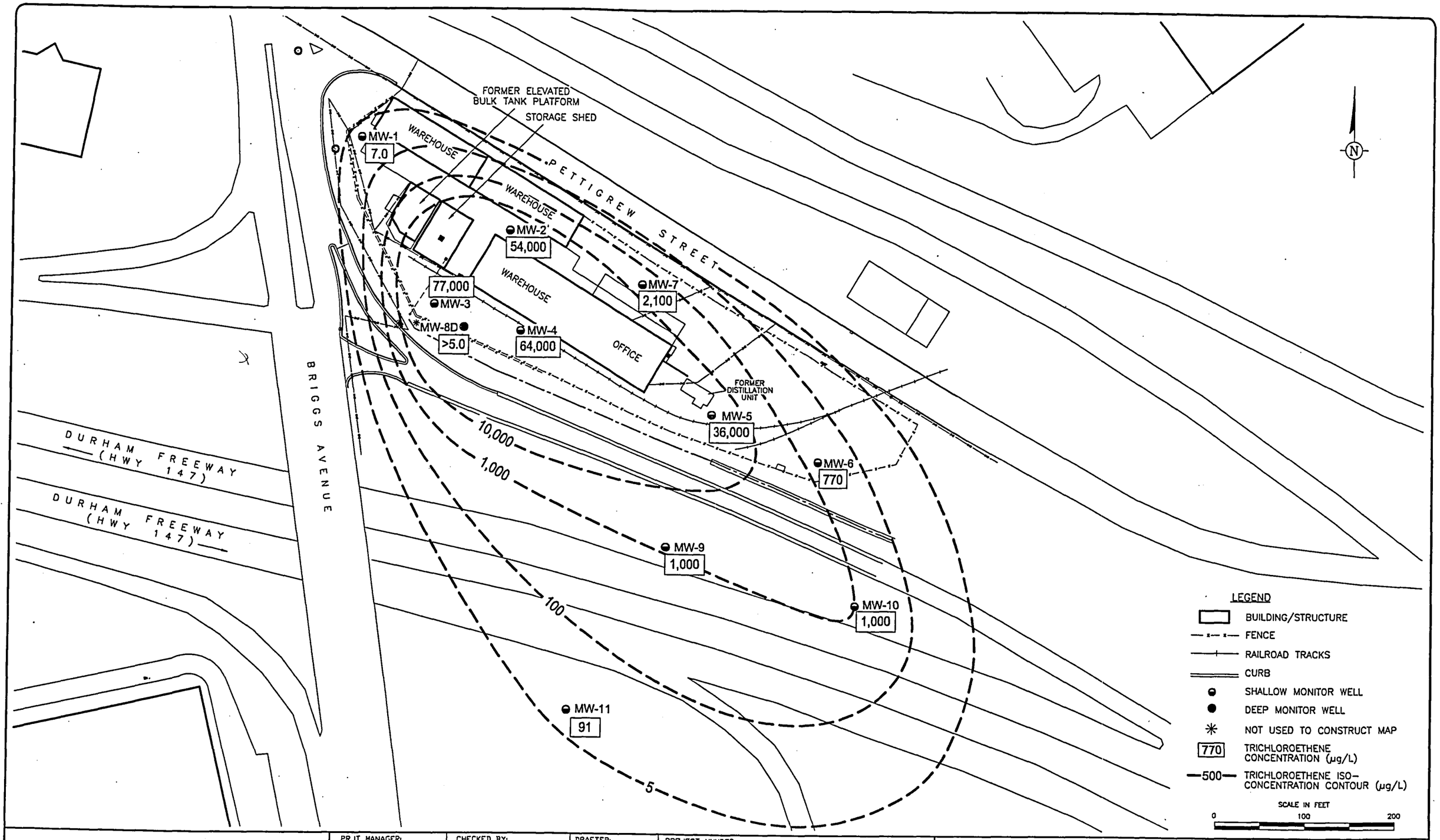

ARCADIS of North Carolina, Inc.
2301 Rexwoods Drive
Suite 102 RALEIGH, NC 27607
Tel: 919/782-5511 Fax: 919/782-5905

PRJT MANAGER: J. SHILLIDAY | CHECKED BY: D. TOMCZAK | DRAFTER: B. ALTOM | PROJECT NUMBER: NC101047.0002.00006

NOTES:
1. BASE MAP DEVELOPED BY COMBINED SURVEYING RESOURCES ON OCTOBER 30, 2001; MAP REVISED ON JULY 10, 2002.
2. NORTH CAROLINA 2L GROUNDWATER STANDARD FOR TETRACHLOROETHENE IS 2.8 µg/L.

DRAWING: WC-38094B

DATE: 19JUL02

BRENNTAG SOUTHEAST FACILITY
(FORMER WORTH CHEMICAL FACILITY)
DURHAM, NORTH CAROLINA

TRICHLOROETHENE (TCE) ISOCONCENTRATION (µg/L) CONTOUR MAP IN GROUNDWATER, JUNE 11-12, 2002

FIGURE: 5-5

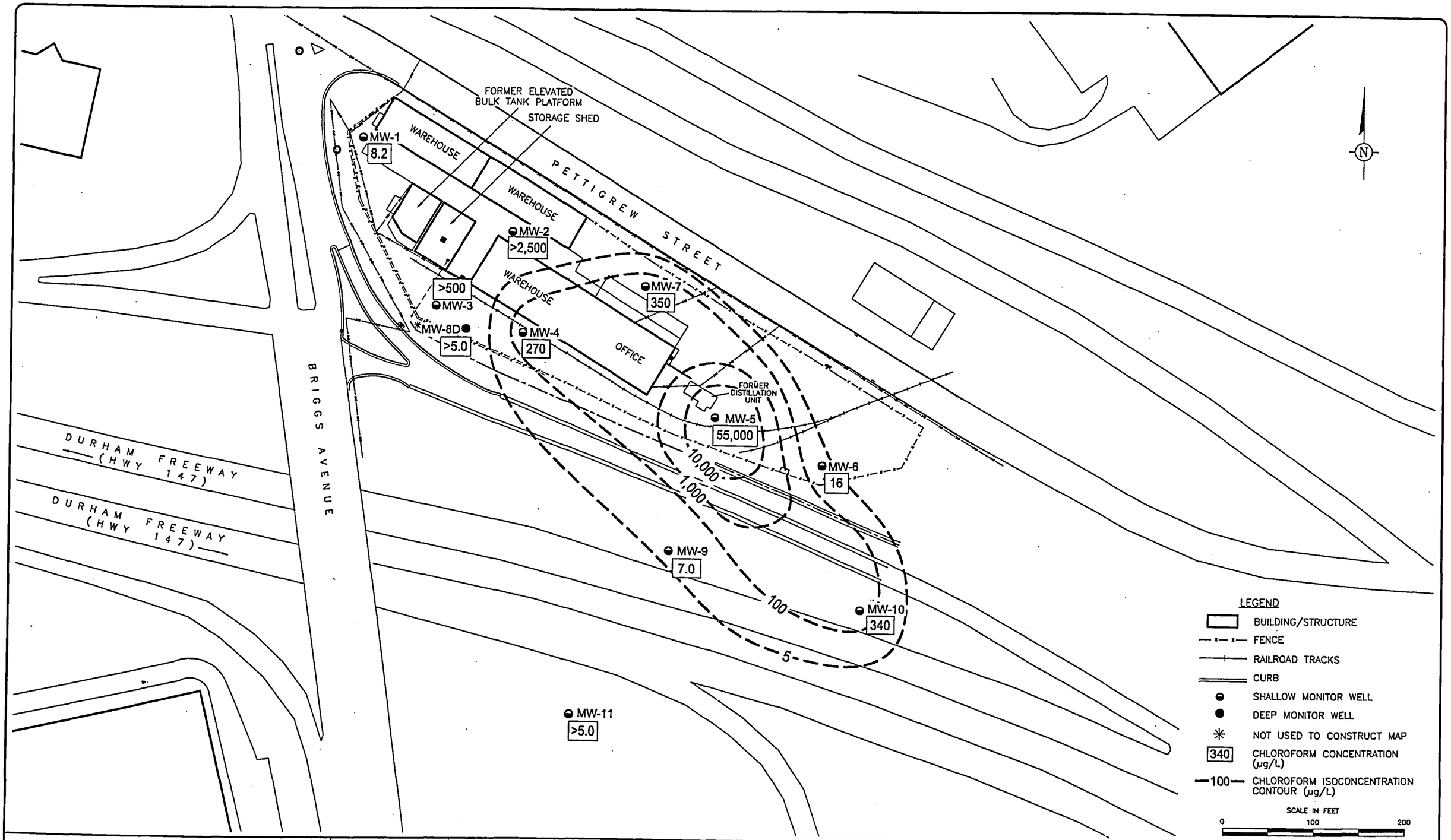

ARCADIS of North Carolina, Inc.
2301 Rexwoods Drive
Suite 102 RALEIGH, NC 27607
Tel: 919/782-5511 Fax: 919/782-5905

PRJT MANAGER: J. SHILLIDAY	CHECKED BY: D. TOMCZAK	DRAFTER: B. ALTOM	PROJECT NUMBER: NC101047.0002.00006

NOTES:
1. BASE MAP DEVELOPED BY COMBINED SURVEYING RESOURCES ON OCTOBER 30, 2001; MAP REVISED ON JULY 10, 2002.
2. NORTH CAROLINA 2L GROUNDWATER STANDARD FOR TETRACHLOROETHENE IS 0.19 µg/L.

DRAWING: WC-38094C

DATE: 19JUL02

BRENNTAG SOUTHEAST FACILITY
(FORMER WORTH CHEMICAL FACILITY)
DURHAM, NORTH CAROLINA

CHLOROFORM ISOCONCENTRATION (µg/L) CONTOUR MAP IN GROUNDWATER, JUNE 11-12, 2002

FIGURE: 5-6

APPENDIX A

ARCADIS

Appendix A

Soil Lithologic Logs

SAMPLE/CORE LOG

ARCADIS G&M Project No. NC101047.0001 Date 8/23/01

Site Location Former Worth Chemical, Durham, North Carolina Sample ID GP-1

Geoprobe™ Contractor: Regional Probing Services

Soil Boring Data:

Top of Surface Elevation N/A	Total Boring Depth 9 ft

Sampling Data:

Interval No.	Interval (ft bls)	Core Recovery	Time Sampled	Laboratory Analyses
1	0 - 4	2 ft - 2 ft	9:30	VOCs
2	4 – 8	2 ft - 2 ft		None
3	8 - 9	1 ft - 0 ft		None

Soil Characterization:

Depth (ft bls)	Description
0-2.5	Gray brown fine-to-medium sand and gravel; organics
2.5-4	Dark brown fine sandy silty clay; moist
4-6	Tan gray mottled fine silty clay; stiff
6-7	Gray red brown fine silty clayey saprolite; stiff
7-9	Gray red brown fine silty saprolite; stiff

Remarks:

Sampling Personnel D. Tomczak

SAMPLE/CORE LOG

ARCADIS G&M Project No. NC101047.0001 Date 8/23/01

Site Location Former Worth Chemical, Durham, North Carolina Sample ID GP-2

Geoprobe™ Contractor: Regional Probing Services

Soil Boring Data:

Top of Surface Elevation N/A	Total Boring Depth 9 ft

Sampling Data:

Interval No.	Interval (ft bls)	Core Recovery	Time Sampled	Laboratory Analyses
1	0 - 4	2 ft - 2 ft	9:58	TPH - Diesel
2	4 – 8	2 ft - 2 ft		None
3	8 - 9	1 ft – 0 ft		None

Soil Characterization:

Depth (ft bls)	Description
0-1	Black brown fine-to-medium silty clayey sand with gravel; trace of organics
1-3	Brown black fine-to-medium silty clayey sand
3-4	Tan fine silty clay; trace of sand
4-6	Gray tan mottled fine silty clay; stiff
6-7	Gray red brown fine silty saprolite
7-9	Red brown fine silty saprolite

Remarks:

Sampling Personnel D. Tomczak

SAMPLE/CORE LOG

ARCADIS G&M Project No. NC101047.0001 Date 8/23/01

Site Location Former Worth Chemical, Durham, North Carolina Sample ID GP-3

Geoprobe™ Contractor: Regional Probing Services

Soil Boring Data:

Top of Surface Elevation N/A	Total Boring Depth 9 ft

Sampling Data:

Interval No.	Interval (ft bls)	Core Recovery	Time Sampled	Laboratory Analyses
1	0 - 4	2 ft - 2 ft	10:23	TPH - Diesel
2	4 – 8	2 ft - 2 ft		None
3	8 - 9	1 ft - 0 ft		None

Soil Characterization:

Depth (ft bls)	Description
0-1	Brown black fine-to-medium silty clayey sand with gravel; organics
1-2	Dark brown fine-to-medium silty clayey sand; trace of gravel
2-4	Dark brown fine-to-medium sandy clayey silt
4-6	Gray tan fine silty clay; stiff
6-7	Red brown fine silty saprolite
7-9	Gray red brown fine silty saprolite

Remarks:

Sampling Personnel D. Tomczak

SAMPLE/CORE LOG

ARCADIS G&M Project No. NC101047.0001 Date 8/22/01

Site Location Former Worth Chemical, Durham, North Carolina Sample ID GP-4

Geoprobe™ Contractor: Regional Probing Services

Soil Boring Data:

Top of Surface Elevation N/A	Total Boring Depth 6.5 ft

Sampling Data:

Interval No.	Interval (ft bls)	Core Recovery	Time Sampled	Laboratory Analyses
1	0 - 4	2 ft - 2 ft	9:25	VOCs
2	4 – 6.5	2 ft – 0.5 ft		None

Soil Characterization:

Depth (ft bls)	Description
0-1	Black gray fine-to-coarse sand with gravel
1-2	Orange gray fine-to-medium sandy silty clay; trace of gravel
2-4	Brown gray mottled fine silty clay; tight; dry
4-6	Gray brown fine silty saprolite; trace of clay; dry
6-6.5	Dark brown fine silty saprolite; dry

Remarks:

Sampling Personnel D. Tomczak

SAMPLE/CORE LOG

ARCADIS G&M Project No. NC101047.0001 Date 8/22/01

Site Location Former Worth Chemical, Durham, North Carolina Sample ID GP-5

Geoprobe™ Contractor: Regional Probing Services

Soil Boring Data:

Top of Surface Elevation N/A	Total Boring Depth 6.5 ft

Sampling Data:

Interval No.	Interval (ft bls)	Core Recovery	Time Sampled	Laboratory Analyses
1	0 - 4	2 ft - 2 ft	9:55	VOCs
2	4 – 6.5	2 ft – 0.5 ft		None

Soil Characterization:

Depth (ft bls)	Description
0-1	Gray black fine-to-coarse gravel with sand
1-2	Brown orange fine silty clay
2-4	Brown mottled fine silty saprolite; dry; stiff
4-6.5	Brown fine silty saprolite; dry

Remarks:

Sampling Personnel D. Tomczak

SAMPLE/CORE LOG

ARCADIS G&M Project No. NC101047.0001 Date 8/22/01

Site Location Former Worth Chemical, Durham, North Carolina Sample ID GP-6

Geoprobe™ Contractor: Regional Probing Services

Soil Boring Data:

Top of Surface Elevation N/A	Total Boring Depth 7 ft

Sampling Data:

Interval No.	Interval (ft bls)	Core Recovery	Time Sampled	Laboratory Analyses
1	0 - 4	2 ft - 2 ft	10:19	VOCs
2	4 – 7	2 ft - 1 ft		None

Soil Characterization:

Depth (ft bls)	Description
0-1	Black gray fin-to-coarse gravel with sand
1-2	Brown mottled fine-to-medium sandy silty clay; stiff; dry
2-4	Gray mottled fine silty clay; stiff
4-7	Brown orange fine silty saprolite

Remarks:

Sampling Personnel D. Tomczak

SAMPLE/CORE LOG

ARCADIS G&M Project No. NC101047.0001 Date 8/22/01

Site Location Former Worth Chemical, Durham, North Carolina Sample ID GP-7

Geoprobe™ Contractor: Regional Probing Services

Soil Boring Data:

Top of Surface Elevation N/A	Total Boring Depth 6.5 ft

Sampling Data:

Interval No.	Interval (ft bls)	Core Recovery	Time Sampled	Laboratory Analyses
1	0 - 4	2 ft - 2 ft	10:42	VOCs
2	4 – 6.5	2 ft – 0.5 ft		None

Soil Characterization:

Depth (ft bls)	Description
0-1	Black gray fine-to-coarse gravel with sand
1-2	Brown mottled fine-to-medium sandy silty clay; stiff
2-4	Brown orange fine silty saprolite; dry
4-5	Gray fine silty saprolite; dry
5-6.5	Gray orange fine silty saprolite; dry

Remarks:

Sampling Personnel D. Tomczak

SAMPLE/CORE LOG

ARCADIS G&M Project No. NC101047.0001 Date 8/22/01

Site Location Former Worth Chemical, Durham, North Carolina Sample ID GP-8

Geoprobe™ Contractor: Regional Probing Services

Soil Boring Data:

Top of Surface Elevation N/A	Total Boring Depth 7 ft

Sampling Data:

Interval No.	Interval (ft bls)	Core Recovery	Time Sampled	Laboratory Analyses
1	0 - 4	2 ft - 2 ft	11:15	VOCs
2	4 – 6.5	2 ft - 1 ft		None

Soil Characterization:

Depth (ft bls)	Description
0-0.5	Concrete slab
0.5-1	Gray gravel with sand
1-4	Gray mottled fine silty clay; stiff; dry
4-6	Gray brown fine silty saprolite; dry
6-7	Red brown fine silty saprolite with partially weathered rock; dry; Triassic

Remarks:

Sampling Personnel D. Tomczak

SAMPLE/CORE LOG

ARCADIS G&M Project No. NC101047.0001 Date 8/22/01

Site Location Former Worth Chemical, Durham, North Carolina Sample ID GP-9

Geoprobe™ Contractor: Regional Probing Services

Soil Boring Data:

Top of Surface Elevation N/A	Total Boring Depth 6.5 ft

Sampling Data:

Interval No.	Interval (ft bls)	Core Recovery	Time Sampled	Laboratory Analyses
1	0 - 4	2 ft - 2 ft	11:50	VOCs
2	4 – 6.5	2 ft – 0.5 ft	11:50	VOCs

Soil Characterization:

Depth (ft bls)	Description
0-0.5	Concrete slab
0.5-1	Brown mottled fine-to-medium sandy silty clay; stiff
1-3	Gray brown fine silty saprolite; stiff
3-4	Dark brown fine silty saprolite; stiff; Triassic
4-6	Dark brown fine silty saprolite; stiff; Triassic
6-6.5	Dark brown fine silty saprolite with partially weathered rock; Triassic

Remarks:

Sampling Personnel D. Tomczak

SAMPLE/CORE LOG

ARCADIS G&M Project No. NC101047.0001 Date 8/22/01

Site Location Former Worth Chemical, Durham, North Carolina Sample ID GP-10

Geoprobe™ Contractor: Regional Probing Services

Soil Boring Data:

Top of Surface Elevation N/A	Total Boring Depth 6.5 ft

Sampling Data:

Interval No.	Interval (ft bls)	Core Recovery	Time Sampled	Laboratory Analyses
1	0 - 4	2 ft - 2 ft	14:14	VOCs
2	4 – 6.5	2 ft – 0.5 ft		None

Soil Characterization:

Depth (ft bls)	Description
0-0.5	Concrete slab
0.5-1.5	Brown mottled fine silty clay; stiff
1.5-4	Red brown mottled fine silty saprolite; trace of clay; stiff
4-6.5	Red brown gray fine silty saprolite; stiff; Triassic

Remarks:

Sampling Personnel D. Tomczak

SAMPLE/CORE LOG

ARCADIS G&M Project No. NC101047.0001 Date 8/22/01

Site Location Former Worth Chemical, Durham, North Carolina Sample ID GP-11

Geoprobe™ Contractor: Regional Probing Services

Soil Boring Data:

Top of Surface Elevation N/A	Total Boring Depth 6.5 ft

Sampling Data:

Interval No.	Interval (ft bls)	Core Recovery	Time Sampled	Laboratory Analyses
1	0 - 4	2 ft - 2 ft	14:42	TPH-Diesel
2	4 – 6.5	2 ft – 0.5 ft		None

Soil Characterization:

Depth (ft bls)	Description
0-0.5	Black brown fine-to-medium silty clayey sand with organics
0.5-1	Brown orange mottled fine silty clay; stiff
1-4	Red brown mottled fine silty saprolite; stiff
4-6.5	Red brown fine silty saprolite; black oxidized bands; stiff; Triassic

Remarks:

Sampling Personnel D. Tomczak

SAMPLE/CORE LOG

ARCADIS G&M Project No. NC101047.0001 Date 8/22/01

Site Location Former Worth Chemical, Durham, North Carolina Sample ID GP-12

Geoprobe™ Contractor: Regional Probing Services

Soil Boring Data:

Top of Surface Elevation N/A	Total Boring Depth 4.5 ft

Sampling Data:

Interval No.	Interval (ft bls)	Core Recovery	Time Sampled	Laboratory Analyses
1	0 - 4	2 ft - 2 ft	15:02	VOCs
2	4 – 4.5	0.5 ft - 0 ft		None

Soil Characterization:

Depth (ft bls)	Description
0-0.5	Concrete slab
0.5-1	Gray fine-to-coarse gravel with sand
1-2	Brown gray fine silty clay; stiff
2-3.5	Red brown fine silty saprolite; stiff; Triassic
3.5-4.5	Dark brown fine silty saprolite; stiff; Triassic

Remarks:

Sampling Personnel D. Tomczak

SAMPLE/CORE LOG

ARCADIS G&M Project No. NC101047.0001 Date 8/22/01

Site Location Former Worth Chemical, Durham, North Carolina Sample ID GP-13

Geoprobe™ Contractor: Regional Probing Services

Soil Boring Data:

Top of Surface Elevation N/A	Total Boring Depth 6.5 ft

Sampling Data:

Interval No.	Interval (ft bls)	Core Recovery	Time Sampled	Laboratory Analyses
1	0 - 4	2 ft - 2 ft	15:23	VOCs
2	4 – 6.5	2 ft - 2 ft		None

Soil Characterization:

Depth (ft bls)	Description
0-0.5	Concrete slab
0.5-1	Gray fine-to-coarse gravel with sand
1-4	Red brown mottled fine silty saprolite; stiff
4-6.5	Gray brown mottled fine silty saprolite; stiff

Remarks:

Sampling Personnel D. Tomczak

SAMPLE/CORE LOG

ARCADIS G&M Project No. NC101047.0001 Date 8/22/01

Site Location Former Worth Chemical, Durham, North Carolina Sample ID GP-14

Geoprobe™ Contractor: Regional Probing Services

Soil Boring Data:

Top of Surface Elevation N/A	Total Boring Depth 8 ft

Sampling Data:

Interval No.	Interval (ft bls)	Core Recovery	Time Sampled	Laboratory Analyses
1	0 - 4	2 ft - 2 ft	15:50	VOCs
2	4 – 8	2 ft - 2 ft	15:50	VOCs

Soil Characterization:

Depth (ft bls)	Description
0-0.5	Concrete slab
0.5-2	Tan gray fine silty clay fill; stiff
2-4	Gray red brown fine silty saprolite; stiff
4-5.5	Gray pink fine silty saprolite; stiff
5.5-7	Red brown fine silty saprolite; black oxidized bands; stiff
7-8	Red brown fine silty saprolite; black oxidized bands; stiff

Remarks:

Sampling Personnel D. Tomczak

SAMPLE/CORE LOG

ARCADIS G&M Project No. NC101047.0001 Date 8/22/01

Site Location Former Worth Chemical, Durham, North Carolina Sample ID GP-15

Geoprobe™ Contractor: Regional Probing Services

Soil Boring Data:

Top of Surface Elevation N/A	Total Boring Depth 7 ft

Sampling Data:

Interval No.	Interval (ft bls)	Core Recovery	Time Sampled	Laboratory Analyses
1	0 - 4	2 ft - 2 ft	17:02	VOCs
2	4 – 7	2 ft - 1 ft		None

Soil Characterization:

Depth (ft bls)	Description
0-1	Black fine-to-medium silty clayey sand; trace of gravel; organics
1-2	Brown mottled fine silty clay; stiff
2-4	Gray red brown fine silty saprolite; stiff
4-5.5	Gray dark brown fine silty saprolite; stiff
5.5-7	Dark brown fine silty saprolite; stiff

Remarks:

Sampling Personnel D. Tomczak

SAMPLE/CORE LOG

ARCADIS G&M Project No. NC101047.0001 Date 8/22/01

Site Location Former Worth Chemical, Durham, North Carolina Sample ID GP-16

Geoprobe™ Contractor: Regional Probing Services

Soil Boring Data:

Top of Surface Elevation N/A	Total Boring Depth 5.5 ft

Sampling Data:

Interval No.	Interval (ft bls)	Core Recovery	Time Sampled	Laboratory Analyses
1	0 - 4	2 ft - 2 ft	16.42	VOCs
2	4 – 5.5	1.5 ft – 0 ft		None

Soil Characterization:

Depth (ft bls)	Description
0-1	Black fine-to-medium silty clayey sand; organics
1-3	Gray mottled fine silty clay; stiff
3-4	Gray red brown fine silty clay; stiff
4-5.5	Gray pink fine silty saprolite; stiff; dry

Remarks:

Sampling Personnel D. Tomczak

SAMPLE/CORE LOG

ARCADIS G&M Project No. NC101047.0001 Date 8/22/01

Site Location Former Worth Chemical, Durham, North Carolina Sample ID GP-17

Geoprobe™ Contractor: Regional Probing Services

Soil Boring Data:

Top of Surface Elevation N/A	Total Boring Depth 6.5 ft

Sampling Data:

Interval No.	Interval (ft bls)	Core Recovery	Time Sampled	Laboratory Analyses
1	0 - 4	2 ft - 2 ft	17:23	VOCs
2	4 – 6.5	2 ft – 0.5 ft		None

Soil Characterization:

Depth (ft bls)	Description
0-1	Black fine-to-medium silty clayey sand; trace of gravel; organics
1-2	Brown mottled fine silty clay; stiff
2-4	Gray red brown fine silty saprolite; stiff; dry
4-6.5	Dark brown fine silty saprolite; stiff; dry

Remarks:

Sampling Personnel D. Tomczak

SAMPLE/CORE LOG

ARCADIS G&M Project No. NC101047.0001 Date 8/22/01

Site Location Former Worth Chemical, Durham, North Carolina Sample ID GP-18

Geoprobe™ Contractor: Regional Probing Services

Soil Boring Data:

Top of Surface Elevation N/A	Total Boring Depth 6.5 ft

Sampling Data:

Interval No.	Interval (ft bls)	Core Recovery	Time Sampled	Laboratory Analyses
1	0 - 4	2 ft - 2 ft	18:00	VOCs
2	4 – 6.5	2 ft – 0.5 ft		None

Soil Characterization:

Depth (ft bls)	Description
0-1	Black fine-to-medium silty clayey sand; trace of gravel; organics
1-2	Tan mottled fine silty clay; stiff
2-4	Gray tan fine silty clay; trace of sand; stiff
4-6.5	Red brown gray fine silty saprolite; stiff

Remarks:

Sampling Personnel D. Tomczak

SAMPLE/CORE LOG

ARCADIS G&M Project No. NC101047.0001 Date 8/22/01

Site Location Former Worth Chemical, Durham, North Carolina Sample ID GP-19

Geoprobe™ Contractor: Regional Probing Services

Soil Boring Data:

Top of Surface Elevation N/A	Total Boring Depth 4 ft

Sampling Data:

Interval No.	Interval (ft bls)	Core Recovery	Time Sampled	Laboratory Analyses
1	0 - 4	2 ft - 2 ft	17:40	VOCs

Soil Characterization:

Depth (ft bls)	Description
0-1	Black fine-to-medium silty clayey sand; trace of gravel; organics
1-4	Gray brown fine clayey silt with fill material; trace of gravel; moist

Remarks:

Sampling Personnel D. Tomczak

SAMPLE/CORE LOG

ARCADIS G&M Project No. NC101047.0001 Date 8/23/01

Site Location Former Worth Chemical, Durham, North Carolina Sample ID GP-20

Geoprobe™ Contractor: Regional Probing Services

Soil Boring Data:

Top of Surface Elevation N/A	Total Boring Depth 10 ft

Sampling Data:

Interval No.	Interval (ft bls)	Core Recovery	Time Sampled	Laboratory Analyses
1	0 - 4	2 ft - 2 ft	8:35	VOCs
2	4 – 8	2 ft - 2 ft		None
3	8 - 10	2 ft – 0 ft		None

Soil Characterization:

Depth (ft bls)	Description
0-1	Tan gray fine-to-coarse sand with gravel; organics
1-2	Tan mottled fine silty clay; trace of sand; stiff
2-4	Gray mottled fine silty clay; stiff
4-5.5	Gray mottled fine silty clay; stiff
5.5-7	Red brown fine silty saprolite; stiff
7-8.5	Red brown fine clayey silty saprolite; stiff
8.5-10	Gray fine clayey saprolite; very stiff

Remarks:

Sampling Personnel D. Tomczak

SAMPLE/CORE LOG

ARCADIS G&M Project No. NC101047.0001 Date 8/23/01

Site Location Former Worth Chemical, Durham, North Carolina Sample ID GP-21

Geoprobe™ Contractor: Regional Probing Services

Soil Boring Data:

Top of Surface Elevation N/A	Total Boring Depth 6 ft

Sampling Data:

Interval No.	Interval (ft bls)	Core Recovery	Time Sampled	Laboratory Analyses
1	0 - 4	2 ft - 2 ft		None
2	4 – 6	2 ft - 0 ft	8:15	VOCs

Soil Characterization:

Depth (ft bls)	Description
0-2	Gray coarse gravel with sand
2-4	Tan mottled fine-to-medium silty clayey sand fill; trace of gravel
4-5	Gray mottled fine silty saprolite; trace of clay; stiff
5-6	Gray red brown fine silty saprolite; stiff

Remarks:

Sampling Personnel D. Tomczak

SAMPLE/CORE LOG

ARCADIS G&M Project No. NC101047.0001 Date 8/23/01

Site Location Former Worth Chemical, Durham, North Carolina Sample ID GP-22

Geoprobe™ Contractor: Regional Probing Services

Soil Boring Data:

Top of Surface Elevation N/A	Total Boring Depth 6.5 ft

Sampling Data:

Interval No.	Interval (ft bls)	Core Recovery	Time Sampled	Laboratory Analyses
1	0 - 4	2 ft - 2 ft	8:55	VOCs
2	4 – 6.5	2 ft – 0.5 ft		None

Soil Characterization:

Depth (ft bls)	Description
0-1	Brown fine-to-medium sand with gravel
1-2	Dark brown fine-to-medium silty clayey sand with gravel
2-4	Gray brown fine silty clay; trace of sand; stiff
4-5	Gray red brown fine silty clayey saprolite; moist; trace of sand
5-6.5	Tan gray fine-to-medium sandy saprolite

Remarks:

Sampling Personnel D. Tomczak

SAMPLE/CORE LOG

ARCADIS G&M Project No. NC101047.0001 Date 8/23/01

Site Location Former Worth Chemical, Durham, North Carolina Sample ID GP-23

Geoprobe™ Contractor: Regional Probing Services

Soil Boring Data:

Top of Surface Elevation N/A	Total Boring Depth 7.5 ft

Sampling Data:

Interval No.	Interval (ft bls)	Core Recovery	Time Sampled	Laboratory Analyses
1	0 - 4	2 ft - 2 ft	11:15	VOCs
2	4 – 7.5	2 ft – 1.5 ft		None

Soil Characterization:

Depth (ft bls)	Description
0-0.5	Gray tan fine-to-medium silty clayey sand with gravel; organics
0.5-2	Gray tan fine sandy silty clay; stiff
2-4	Gray red brown fine silty clayey saprolite
4-6	Gray tan pink fine silty saprolite
6-7.5	Red brown fine silty saprolite

Remarks:

Sampling Personnel D. Tomczak

SAMPLE/CORE LOG

ARCADIS Project No. NC101047.0002 Date 4/18/02

Site Location Brenntag Southeast (Former Worth Chemical), Durham, NC Sample ID GP-24

Geoprobe™ Contractor: Regional Probing Services

Soil Boring Data:

Top of Surface Elevation N/A	Total Boring Depth 7.5 ft

Sampling Data:

Interval No.	Interval (ft bls)	PID Reading (ppm)	Time Sampled	Laboratory Analyses
1	0 - 2	4.3		None
2	2 – 4	14.3		None
3	4 – 6	31.3		None
4	6 – 7.5	414	13:20	VOCs

Soil Characterization:

Depth (ft bls)	Description
0-1.5	Concrete with black medium-to-coarse grained sandy gravel
1.5-4	Gray mottled fine-to-medium grained sandy silty clay; stiff; fill
4-6.5	Gray, white and tan fine-to-medium grained sandy silty clay; fill
6.5-7.5	Red brown fine grained clayey silty saprolite

Remarks:

Sampling Personnel D. Tomczak

SAMPLE/CORE LOG

ARCADIS Project No. NC101047.0002 Date 4/18/02

Site Location Brenntag Southeast (Former Worth Chemical), Durham, NC Sample ID GP-25

Geoprobe™ Contractor: Regional Probing Services

Soil Boring Data:

Top of Surface Elevation N/A	Total Boring Depth 9 ft

Sampling Data:

Interval No.	Interval (ft bls)	PID Reading (ppm)	Time Sampled	Laboratory Analyses
1	0 - 2	32.3		None
2	2 – 4	92.1		None
3	4 – 6	98.8	13:50	VOCs
4	6 - 8	75.9		None
5	8 - 9	83.2		None

Soil Characterization:

Depth (ft bls)	Description
0-1	Concrete with coarse grained gravel
1-2.5	Gray brown mottled fine grained silty clay; stiff; fill
2.5-4	Red brown fine grained clayey silt
4-5.5	Red brown fine grained clayey silt; stiff
5.5-7	Red brown fine grained clayey silt; stiff
7-9	Red brown fine grained clayey silty saprolite

Remarks:

Sampling Personnel D. Tomczak

SAMPLE/CORE LOG

ARCADIS Project No. NC101047.0002 Date 4/18/02

Site Location Brenntag Southeast (Former Worth Chemical), Durham, NC Sample ID GP-26

Geoprobe™ Contractor: Regional Probing Services

Soil Boring Data:

Top of Surface Elevation N/A	Total Boring Depth 10.5 ft

Sampling Data:

Interval No.	Interval (ft bls)	PID Reading (ppm)	Time Sampled	Laboratory Analyses
1	0 - 2	516		None
2	2 – 4	612		None
3	4 – 5.5	1213	14:50	VOCs
4	5.5 - 7	1366	14:50	VOCs
5	7 – 9	772		None
6	9 – 10.5	645		None

Soil Characterization:

Depth (ft bls)	Description
0-0.5	Concrete with coarse grained gravel
0.5-2	Gray and brown mottled fine grained silty clay; stiff
2-4	Gray and brown mottled fine grained clayey silt; stiff
4-5.5	Red brown and gray fine grained clayey silt
5.5-7	Red brown and gray fine grained clayey silty saprolite
7-9	Red brown fine grained silty saprolite; black nodules
9-10.5	Red brown and gray fine grained clayey silty saprolite

Remarks:

Sampling Personnel D. Tomczak

SAMPLE/CORE LOG

ARCADIS Project No. NC101047.0002 Date 4/18/02

Site Location Brenntag Southeast (Former Worth Chemical), Durham, NC Sample ID GP-27

Geoprobe™ Contractor: Regional Probing Services

Soil Boring Data:

Top of Surface Elevation N/A	Total Boring Depth 11 ft

Sampling Data:

Interval No.	Interval (ft bls)	PID Reading (ppm)	Time Sampled	Laboratory Analyses
1	0 - 3	529		None
2	3 – 4	432		None
3	4 - 5	744		None
4	5 - 7	838	13:00	VOCs
5	7 - 8			None
6	8 - 11	600		None

Soil Characterization:

Depth (ft bls)	Description
0-1	Concrete with medium-to-coarse grained sandy gravel
1-3	Mottled fine grained silty clay; tight; fill
3-4	Red brown fine grained clayey silt
4-5	Red brown fine grained silty clay; stiff
5-7	Red brown mottled fine grained silty clay; stiff
7-8	Red brown mottled fine grained clayey silty saprolite
8-11	Red brown mottled fine grained clayey silty saprolite; black nodules

Remarks:

Sampling Personnel D. Tomczak

SAMPLE/CORE LOG

ARCADIS Project No. NC101047.0002 Date 4/18/02

Site Location Brenntag Southeast (Former Worth Chemical), Durham, NC Sample ID GP-28

Geoprobe™ Contractor: Regional Probing Services

Soil Boring Data:

Top of Surface Elevation N/A	Total Boring Depth 6 ft

Sampling Data:

Interval No.	Interval (ft bls)	PID Reading (ppm)	Time Sampled	Laboratory Analyses
1	0 - 2	1547	12:35	VOCs
2	2 – 4	93.7		None
3	4 - 6	261		None

Soil Characterization:

Depth (ft bls)	Description
0-0.5	Concrete with coarse grained gravel
0.5-1	Mottled fine grained silty clay; stiff; fill
1-2	Light red fine grained clayey silt
2-4	Light reddish brown fine grained clayey silt
4-6	Red fine grained clayey silty saprolite; black oxidized bands

Remarks:

Sampling Personnel D. Tomczak

SAMPLE/CORE LOG

ARCADIS Project No. NC101047.0002 Date 4/19/02

Site Location Brenntag Southeast (Former Worth Chemical), Durham, NC Sample ID GP-29

Geoprobe™ Contractor: Regional Probing Services

Soil Boring Data:

Top of Surface Elevation N/A	Total Boring Depth 7 ft

Sampling Data:

Interval No.	Interval (ft bls)	PID Reading (ppm)	Time Sampled	Laboratory Analyses
1	0 - 2	8.8		None
2	2 – 4	10.8		None
3	4 - 5	11.3	10:50	VOCs
4	5 - 7	14.3		None

Soil Characterization:

Depth (ft bls)	Description
0-0.5	Gray and black medium-to-coarse grained sand with gravel
0.5-2	Gray and brown mottled fine grained silty clay; stiff
2-4	Gray and brown mottled fine grained silty clay; stiff
4-5	Gray and brown mottled fine grained clayey silty saprolite
5-7	Red brown and gray fine grained clayey silty saprolite

Remarks:

Sampling Personnel D. Tomczak

SAMPLE/CORE LOG

ARCADIS Project No. NC101047.0002 Date 4/18/02

Site Location Brenntag Southeast (Former Worth Chemical), Durham, NC Sample ID GP-30

Geoprobe™ Contractor: Regional Probing Services

Soil Boring Data:

Top of Surface Elevation N/A	Total Boring Depth 9 ft

Sampling Data:

Interval No.	Interval (ft bls)	PID Reading (ppm)	Time Sampled	Laboratory Analyses
1	0 - 2	7.8		None
2	2 – 4	8.3	15:15	VOCs
3	4 – 5.5	7.2		None
4	5.5 - 7	6.6		None
5	7 - 9	5.2		None

Soil Characterization:

Depth (ft bls)	Description
0-0.5	Gray coarse grained gravel
0.5-2	Gray and orange fine grained silty clay; very stiff
2-4	Gray and brown mottled fine grained clayey silt; very stiff
4-5.5	Red brown fine grained clayey silty saprolite
5.5-7	Red brown fine grained clayey silty saprolite
7-9	Red brown and gray fine grained clayey silty saprolite

Remarks:

Sampling Personnel D. Tomczak

SAMPLE/CORE LOG

ARCADIS Project No. NC101047.0002 Date 4/18/02

Site Location Brenntag Southeast (Former Worth Chemical), Durham, NC Sample ID GP-31

Geoprobe™ Contractor: Regional Probing Services

Soil Boring Data:

Top of Surface Elevation N/A	Total Boring Depth 8 ft

Sampling Data:

Interval No.	Interval (ft bls)	PID Reading (ppm)	Time Sampled	Laboratory Analyses
1	0 - 2	7.4		None
2	2 – 4	19.3		None
3	4 – 5.5	55.0		None
4	5.5 - 7	306	15:50	VOCs
5	7 - 8	93.2		None

Soil Characterization:

Depth (ft bls)	Description
0-0.5	Black and brown medium-to-coarse grained sandy gravel and top soil
0.5-2	Tan and red brown fine-to-medium grained sandy silty clay; gravel; stiff
2-4	Gray brown mottled fine grained clayey silt; trace of sand
4-5.5	Gray brown mottled fine grained silty clay; stiff
5.5-7	Red brown and gray fine grained clayey silty saprolite; stiff
7-8	Red brown and gray fine grained clayey silty saprolite

Remarks:

Sampling Personnel D. Tomczak

SAMPLE/CORE LOG

ARCADIS Project No. NC101047.0002 Date 4/18/02

Site Location Brenntag Southeast (Former Worth Chemical), Durham, NC Sample ID GP-32

Geoprobe™ Contractor: Regional Probing Services

Soil Boring Data:

Top of Surface Elevation N/A	Total Boring Depth 6 ft

Sampling Data:

Interval No.	Interval (ft bls)	PID Reading (ppm)	Time Sampled	Laboratory Analyses
1	0 - 2	1,488	16:30	VOCs
2	2 – 4	1,662	16:30	VOCs
3	4 - 6	451		None

Soil Characterization:

Depth (ft bls)	Description
0-0.5	Black and brown medium-to-coarse grained sand with gravel and top soil
0.5-1.5	Brown and gray mottled fine grained silty clay; stiff
1.5-2	Gray fine grained clayey silt; odor
2-4	Red brown fine grained clayey silty saprolite
4-6	Red brown fine grained clayey silty saprolite

Remarks:

Sampling Personnel D. Tomczak

SAMPLE/CORE LOG

ARCADIS Project No. NC101047.0002 Date 4/18/02

Site Location Brenntag Southeast (Former Worth Chemical), Durham, NC Sample ID GP-33

Geoprobe™ Contractor: Regional Probing Services

Soil Boring Data:

Top of Surface Elevation N/A	Total Boring Depth 6.5 ft

Sampling Data:

Interval No.	Interval (ft bls)	PID Reading (ppm)	Time Sampled	Laboratory Analyses
1	0 - 2	12.2		None
2	2 – 4	13.3	16:10	VOCs
3	4 – 6.5	13.8		None

Soil Characterization:

Depth (ft bls)	Description
0-0.5	Black and gray coarse gravel
0.5-2	Tan and red brown fine grained silty clay; some gravel; stiff
2-4	Tan and red brown fine grained silty clay; stiff
4-6.5	Red brown fine grained clayey silty saprolite

Remarks:

Sampling Personnel D. Tomczak

SAMPLE/CORE LOG

ARCADIS Project No. NC101047.0002 Date 4/19/02

Site Location Brenntag Southeast (Former Worth Chemical), Durham, NC Sample ID GP-34

Geoprobe™ Contractor: Regional Probing Services

Soil Boring Data:

Top of Surface Elevation N/A	Total Boring Depth 6.5 ft

Sampling Data:

Interval No.	Interval (ft bls)	PID Reading (ppm)	Time Sampled	Laboratory Analyses
1	0 - 2	3.1		None
2	2 – 4	11.3	8:15	VOCs
3	4 – 6.5	12.2		None

Soil Characterization:

Depth (ft bls)	Description
0-0.5	Black and brown medium-to-coarse grained sand and gravel with top soil
0.5-2	Dark brown fine-to-medium grained sandy silty clay; some gravel
2-4	Tan mottled fine grained silty clay; trace of fine-to-medium grained sand and gravel
4-6.5	Red brown fine grained clayey silty saprolite

Remarks:

Sampling Personnel D. Tomczak

SAMPLE/CORE LOG

ARCADIS Project No. NC101047.0002 Date 4/19/02

Site Location Brenntag Southeast (Former Worth Chemical), Durham, NC Sample ID GP-35

Geoprobe™ Contractor: Regional Probing Services

Soil Boring Data:

Top of Surface Elevation N/A	Total Boring Depth 6.5 ft

Sampling Data:

Interval No.	Interval (ft bls)	PID Reading (ppm)	Time Sampled	Laboratory Analyses
1	0 - 2	3.6		None
2	2 – 4	7.1		None
3	4 – 5.5	26.1		None
4	5.5 – 6.5	37.0	8:35	VOCs

Soil Characterization:

Depth (ft bls)	Description
0-1	Gray medium-to-coarse grained gravel with sand
1-2	Tan and gray mottled fine-to-medium grained sandy silty clay; black staining
2-4	Gray mottled fine grained silty clay; stiff
4-5.5	Gray fine grained clayey silty saprolite
5.5-6.5	Red brown and gray fine grained clayey silty saprolite

Remarks:

Sampling Personnel D. Tomczak

SAMPLE/CORE LOG

ARCADIS Project No. NC101047.0002 Date 4/19/02

Site Location Brenntag Southeast (Former Worth Chemical), Durham, NC Sample ID GP-36

Geoprobe™ Contractor: Regional Probing Services

Soil Boring Data:

Top of Surface Elevation N/A	Total Boring Depth 7 ft

Sampling Data:

Interval No.	Interval (ft bls)	PID Reading (ppm)	Time Sampled	Laboratory Analyses
1	0 - 2	7.0		None
2	2 – 4	11.1	8:50	VOCs
3	4 – 5.5	7.7		None
4	5.5 – 7	8.5		None

Soil Characterization:

Depth (ft bls)	Description
0-1	Black and brown coarse gravel with fine-to-medium grained sand; some top soil
1-2	Tan and gray fine-to-medium grained sandy silty clay; stiff
2-4	Tan and gray mottled fine grained silty clay; trace of sand; stiff
4-5.5	Red brown and gray fine grained clayey silty saprolite
5.5-7	Red brown fine grained clayey silty saprolite

Remarks:

Sampling Personnel D. Tomczak

SAMPLE/CORE LOG

ARCADIS Project No. NC101047.0002 Date 4/19/02

Site Location Brenntag Southeast (Former Worth Chemical), Durham, NC Sample ID GP-37

Geoprobe™ Contractor: Regional Probing Services

Soil Boring Data:

Top of Surface Elevation N/A	Total Boring Depth 5.5 ft

Sampling Data:

Interval No.	Interval (ft bls)	PID Reading (ppm)	Time Sampled	Laboratory Analyses
1	0 - 2	31.8		None
2	2 – 4	166		None
3	4 – 5.5	206	10:00	VOCs

Soil Characterization:

Depth (ft bls)	Description
0-1	Gray and brown medium-to-coarse grained gravel with sand
1-2	Gray and tan fine-to-medium grained sandy silty clay; trace of gravel; stiff
2-4	Gray and tan mottled fine grained clayey silty saprolite; stiff
4-5.5	Gray and tan mottled fine grained clayey silty saprolite

Remarks:

Sampling Personnel D. Tomczak

SAMPLE/CORE LOG

ARCADIS Project No. NC101047.0002 Date 4/19/02

Site Location Brenntag Southeast (Former Worth Chemical), Durham, NC Sample ID GP-38

Geoprobe™ Contractor: Regional Probing Services

Soil Boring Data:

Top of Surface Elevation N/A	Total Boring Depth 8 ft

Sampling Data:

Interval No.	Interval (ft bls)	PID Reading (ppm)	Time Sampled	Laboratory Analyses
1	0 - 2	759		None
2	2 – 4	3,466		None
3	4 – 5.5	>9,999	9:40	VOCs
4	5.5 – 7	>9,999		None
5	7 – 8	>9,999	9:40	VOCs

Soil Characterization:

Depth (ft bls)	Description
0-0.5	Brown and black medium-to-coarse grained sand with gravel; some organics
0.5-2	Tan and gray fine-to-medium grained sandy silty clay; stiff
2-4	Tan and gray mottled fine grained clayey silty saprolitic material
4-5.5	Tan and gray mottled fine grained clayey silty saprolitic material
5.5-7	Red brown and gray mottled fine grained silty clay; stiff
7-8	Red brown fine grained clayey silty saprolite

Remarks:

Sampling Personnel D. Tomczak

SAMPLE/CORE LOG

ARCADIS Project No. NC101047.0002 Date 4/19/02

Site Location Brenntag Southeast (Former Worth Chemical), Durham, NC Sample ID GP-39

Geoprobe™ Contractor: Regional Probing Services

Soil Boring Data:

Top of Surface Elevation N/A	Total Boring Depth 6.5 ft

Sampling Data:

Interval No.	Interval (ft bls)	PID Reading (ppm)	Time Sampled	Laboratory Analyses
1	0 - 2	9.2		None
2	2 – 4	20.1		None
3	4 – 5.5	14.1		None
4	5.5 – 6.5	19.5	9:15	VOCs

Soil Characterization:

Depth (ft bls)	Description
0-0.5	Black and brown fine-to-coarse grained sandy top soil with gravel
0.5-2	Gray and tan fine-to-medium grained sandy silty clay; organics
2-4	Gray and tan mottled fine grained silty clay; stiff
4-5.5	Red brown fine grained clayey silty saprolite
5.5-6.5	Red brown fine grained clayey silty saprolite

Remarks:

Sampling Personnel D. Tomczak

SAMPLE/CORE LOG

ARCADIS Project No. NC101047.0002 Date 4/19/02

Site Location Brenntag Southeast (Former Worth Chemical), Durham, NC Sample ID GP-40

Geoprobe™ Contractor: Regional Probing Services

Soil Boring Data:

Top of Surface Elevation N/A	Total Boring Depth 7 ft

Sampling Data:

Interval No.	Interval (ft bls)	PID Reading (ppm)	Time Sampled	Laboratory Analyses
1	0 - 2	7.3		None
2	2 – 4	7.8		None
3	4 – 5.5	8.2		None
4	5.5 – 7	9.8	11:50	VOCs

Soil Characterization:

Depth (ft bls)	Description
0-0.5	Black and brown medium grained sandy top soil with some gravel
0.5-1.5	Brown and gray fine-to-medium grained sandy silty clay; stiff
1.5-2	Brown and gray fine-to-medium grained silty quartz sand; moist
2-4	Gray and brown fine grained silty clay; stiff
4-5.5	Gray and brown mottled fine grained silty clay; stiff; organics
5.5-7	Red brown and gray fine grained clayey silty saprolite

Remarks:

Sampling Personnel D. Tomczak

SAMPLE/CORE LOG

ARCADIS Project No. NC101047.0002 Date 4/19/02

Site Location Brenntag Southeast (Former Worth Chemical), Durham, NC Sample ID GP-43

Geoprobe™ Contractor: Regional Probing Services

Soil Boring Data:

Top of Surface Elevation N/A	Total Boring Depth 6.5 ft

Sampling Data:

Interval No.	Interval (ft bls)	PID Reading (ppm)	Time Sampled	Laboratory Analyses
1	0 - 2	24.9	10:25	VOCs
2	2 – 4	11.5		None
3	4 – 6.5	5.5		None

Soil Characterization:

Depth (ft bls)	Description
0-1	Gray and tan medium-to-coarse grained gravel with sand
1-2	Tan, brown and black fine-to-medium grained sandy silty clay; stiff
2-4	Red brown and gray fine grained silty clay; stiff
4-6.5	Red brown and gray fine grained clayey silty saprolite

Remarks:

Sampling Personnel D. Tomczak

SAMPLE/CORE LOG

ARCADIS G&M Project No. NC101047.0001 Date 8/23/01

Site Location Former Worth Chemical, Durham, North Carolina Sample ID HA-1

Geoprobe™ Contractor: hand auger

Soil Boring Data:

Top of Surface Elevation N/A	Total Boring Depth 4.5 ft

Sampling Data:

Interval No.	Interval (ft bls)	Core Recovery	Time Sampled	Laboratory Analyses
1	0 - 4	2 ft - 2 ft	11:55	VOCs
2	4 – 4.5	0.5 ft - 0 ft		None

Soil Characterization:

Depth (ft bls)	Description
0-0.5	Concrete slab
0.5-1	Void/air space
1-2	Dark brown tan fine-to-medium sandy silty clay
2-3.5	Tan orange fine-to-medium sandy silty clay
3.5-4.5	Gray orange fine silty clay; stiff

Remarks: A hole was cored through the concrete slab and the soil sample was collected beneath the slab.

Sampling Personnel D. Tomczak

SAMPLE/CORE LOG

ARCADIS G&M Project No. NC101047.0001 Date 8/23/01

Site Location Former Worth Chemical, Durham, North Carolina Sample ID HA-2

Geoprobe™ Contractor: Regional Probing Services

Soil Boring Data:

Top of Surface Elevation N/A	Total Boring Depth 3.5 ft

Sampling Data:

Interval No.	Interval (ft bls)	Core Recovery	Time Sampled	Laboratory Analyses
1	0 – 3.5	2 ft – 1.5 ft	12:15	VOCs

Soil Characterization:

Depth (ft bls)	Description
0-1	Concrete slab
1-2	Gray red brown fine-to-medium sandy silty clay
2-3	Orange tan fine-to-medium silty clayey sand
3-3.5	Orange tan fine-to-medum silty clayey sand

Remarks: A hole was cored through the concrete slab and the soil sample was collected beneath the slab.

Sampling Personnel D. Tomczak

SAMPLE/CORE LOG

ARCADIS G&M Project No. NC101047.0001 Date 8/23/01

Site Location Former Worth Chemical, Durham, North Carolina Sample ID HA-3

Geoprobe™ Contractor: hand auger

Soil Boring Data:

Top of Surface Elevation N/A	Total Boring Depth 3 ft

Sampling Data:

Interval No.	Interval (ft bls)	Core Recovery	Time Sampled	Laboratory Analyses
1	0 - 3	2 ft - 1 ft	13:17	VOCs

Soil Characterization:

Depth (ft bls)	Description
0-1	Black brown fine-to-medium silty clayey sand; organics; moist
1-2	White orange fine-to-medium silty clayey sand; wet
2-3	Gray brown fine silty saprolite; trace of clay

Remarks:

Sampling Personnel D. Tomczak

SAMPLE/CORE LOG

ARCADIS Project No. NC101047.0002 Date 4/19/02

Site Location Brenntag Southeast (Former Worth Chemical), Durham, NC Sample ID HA-4

Geoprobe™ Contractor: Regional Probing Services

Soil Boring Data:

Top of Surface Elevation N/A	Total Boring Depth 3 ft

Sampling Data:

Interval No.	Interval (ft bls)	PID Reading (ppm)	Time Sampled	Laboratory Analyses
1	0 - 1	9.5		None
2	1 – 2	13.6		None
3	2 – 3	38.6	12:25	VOCs

Soil Characterization:

Depth (ft bls)	Description
0-1	Brown and black fine-to-medium grained silty clayey quartz sand; organics; debris
1-2	Gray and brown mottled fine grained silty clay; stiff
2-3	Gray and brown mottled fine silty clay; stiff; black nodules

Remarks:

Sampling Personnel D. Tomczak

SAMPLE/CORE LOG

ARCADIS Project No. NC101047.0002 Date 4/19/02

Site Location Brenntag Southeast (Former Worth Chemical), Durham, NC Sample ID HA-5

Geoprobe™ Contractor: Regional Probing Services

Soil Boring Data:

Top of Surface Elevation N/A	Total Boring Depth 2 ft

Sampling Data:

Interval No.	Interval (ft bls)	PID Reading (ppm)	Time Sampled	Laboratory Analyses
1	0 - 1	10.7	12:45	VOCs
2	1 – 2	7.6		None

Soil Characterization:

Depth (ft bls)	Description
0-1	Red brown and gray fine-to-medium grained silty sandy clay; organics
1-2	Red brown fine grained clayey silty saprolite

Remarks:

Sampling Personnel D. Tomczak

APPENDIX B

Appendix B

Monitor Well Construction Logs

ARCADIS

WELL CONSTRUCTION LOG- UNCONSOLIDATED

Well MW-1

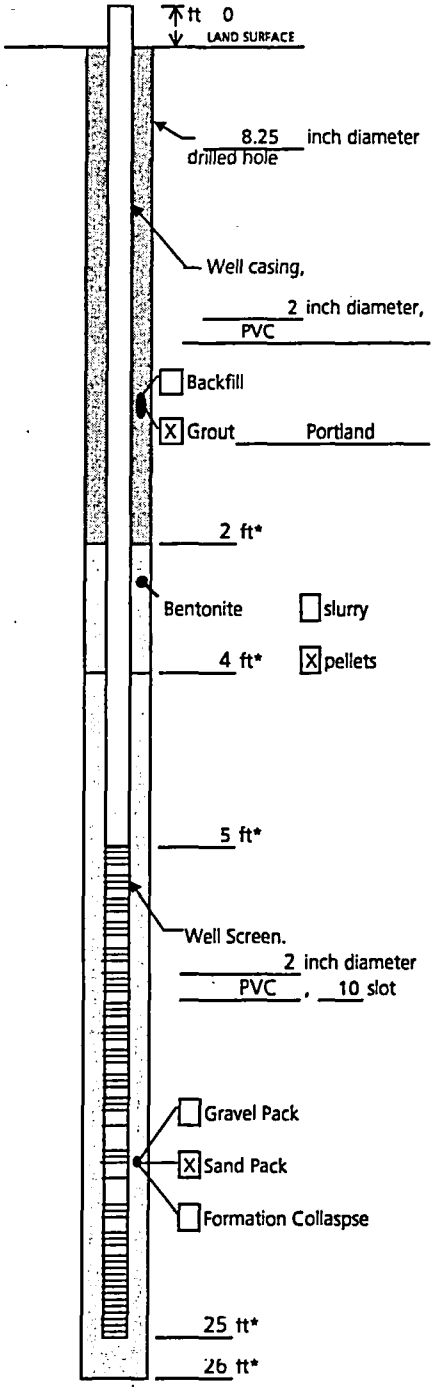

Measuring Point is Top of Well Casing Unless Otherwise Noted.

* Depth Below Land Surface

Project Brenntag Southeast (Former Worth Chemical)

Town/City Durham

County Durham State NC

Permit No.

Land-Surface Elevation and Datum:

_____ feet ☐ Surveyed ☐ Estimated

Installation Date(s) October 3, 2001

Drilling Method Air hammer

Drilling Contractor Geologic Exploration, Inc.

Development Technique(s) and Date(s)

Submersible Pump October 3, 2001

Water Removed During Development 9 gallons

Static Depth to Water _____ feet below M.P.

DEPTH (ft bls)	DRILLING LOG Formation Description
0 - 5	Dark red brown fine clayey silt
5 - 10	Red brown fine silty saprolite
10 - 15	Tan brown fine silty saprolite
15 - 20	Tan brown fine silty saprolite with partially weathered rock
20 - 25	Tan brown fine silty saprolite with partially weathered rock
25 - 30	Pink brown fine weathered siltstone

Prepared by D. Tomczak/W. Plekan

ARCADIS

WELL CONSTRUCTION LOG- UNCONSOLIDATED

Well MW-2

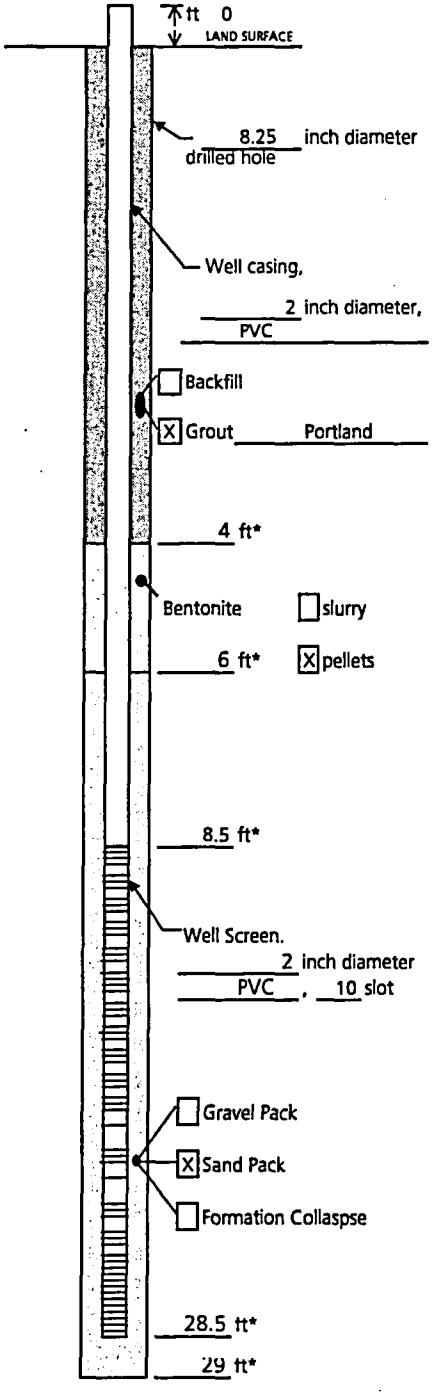

Measuring Point is Top of Well Casing Unless Otherwise Noted.

* Depth Below Land Surface

Project Brenntag Southeast (Former Worth Chemical)

Town/City Durham

County Durham State NC

Permit No.

Land-Surface Elevation and Datum:

_____ feet ☐ Surveyed ☐ Estimated

Installation Date(s) October 3, 2001

Drilling Method Air hammer

Drilling Contractor Geologic Exploration, Inc.

Development Technique(s) and Date(s)

Submersible Pump October 3, 2001

Water Removed During Development 15 gallons

Static Depth to Water _____ feet below M.P.

DEPTH (ft bls)	DRILLING LOG *Formation Description*
0 - 5	Red mottled fine clayey silt
5 - 10	Red brown fine silty saprolite
10 - 15	Red brown fine clayey silty saprolite with partially weathered rock
15 - 20	Red brown fine micaceous silty saprolite with partially weathered rock
20 - 25	Red brown fine silty saprolite with partially weathered rock
25 - 30	Pink brown fine weathered siltstone

Prepared by D. Tomczak/W. Plekan

ARCADIS

WELL CONSTRUCTION LOG- UNCONSOLIDATED

Well MW-3

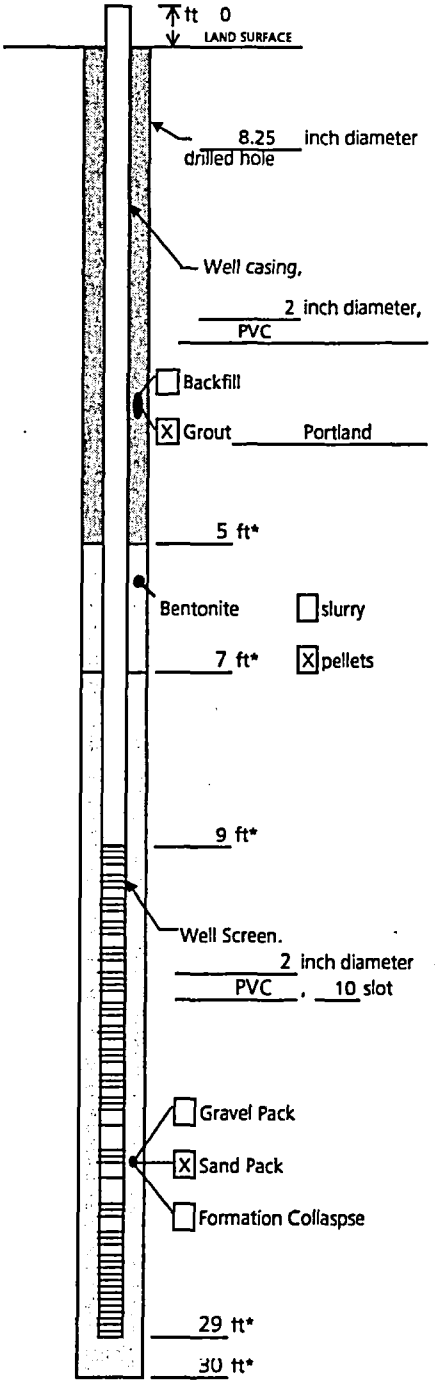

Measuring Point is Top of Well Casing Unless Otherwise Noted.

* Depth Below Land Surface

Project Brenntag Southeast (Former Worth Chemical)

Town/City Durham

County Durham State NC

Permit No.

Land-Surface Elevation and Datum:

_____ feet ☐ Surveyed ☐ Estimated

Installation Date(s) October 3, 2001

Drilling Method Air hammer

Drilling Contractor Geologic Exploration, Inc.

Development Technique(s) and Date(s)

Submersible Pump October 3, 2001

Water Removed During Development 3 gallons

Static Depth to Water _____ feet below M.P.

DEPTH (ft bls)	DRILLING LOG Formation Description
0 - 5	Dark red brown fine clayey silt
5 - 10	Red brown fine silty saprolite
10 - 15	Red brown fine clayey silty saprolite
15 - 20	Dark brown fine silty saprolite with partially weathered rock
20 - 25	Pink brown fine weathered siltstone
25 - 30	Pink brown fine weathered siltstone

Prepared by D. Tomczak/W. Plekan

ARCADIS

WELL CONSTRUCTION LOG- UNCONSOLIDATED

Well MW-4

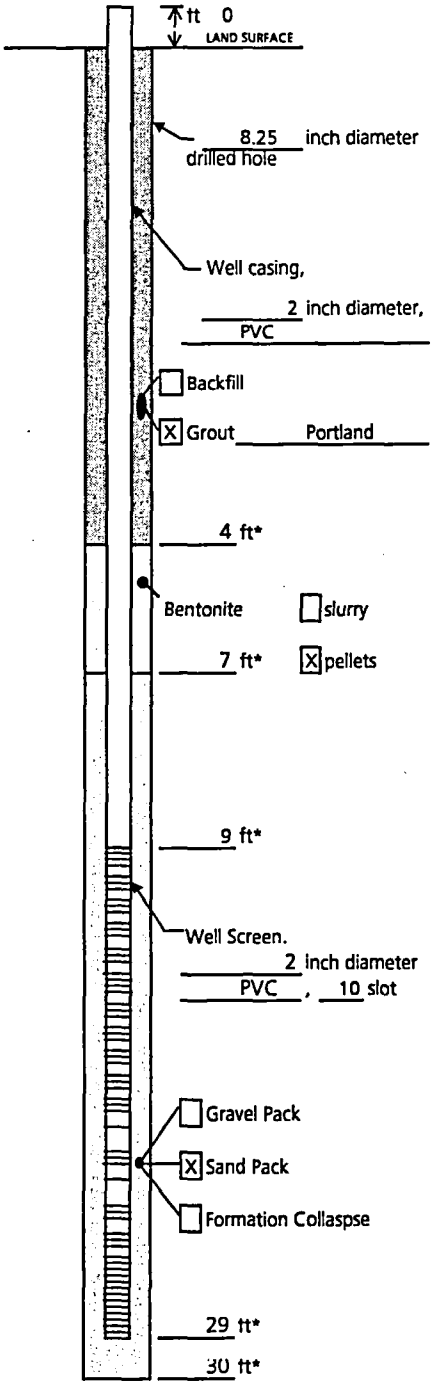

Measuring Point is Top of Well Casing Unless Otherwise Noted.

* Depth Below Land Surface

Project Brenntag Southeast (Former Worth Chemical)

Town/City Durham

County Durham State NC

Permit No.

Land-Surface Elevation and Datum:

_____ feet ☐ Surveyed ☐ Estimated

Installation Date(s) October 4, 2001

Drilling Method Air hammer

Drilling Contractor Geologic Exploration, Inc.

Development Technique(s) and Date(s)

Submersible Pump October 4, 2001

Water Removed During Development 10 gallons

Static Depth to Water _____ feet below M.P.

DEPTH (ft bls)	DRILLING LOG Formation Description
0 - 5	Red brown fine clayey silt
5 - 10	Red brown fine silty saprolite
10 - 15	Red brown fine silty saprolite with partially weathered rock
15 - 20	Red brown fine silty saprolite with partially weathered rock
20 - 25	Pink brown fine weathered siltstone
25 - 30	Pink brown fine weathered siltstone

Prepared by D. Tomczak/W. Plekan

ARCADIS

WELL CONSTRUCTION LOG- UNCONSOLIDATED

Well MW-5

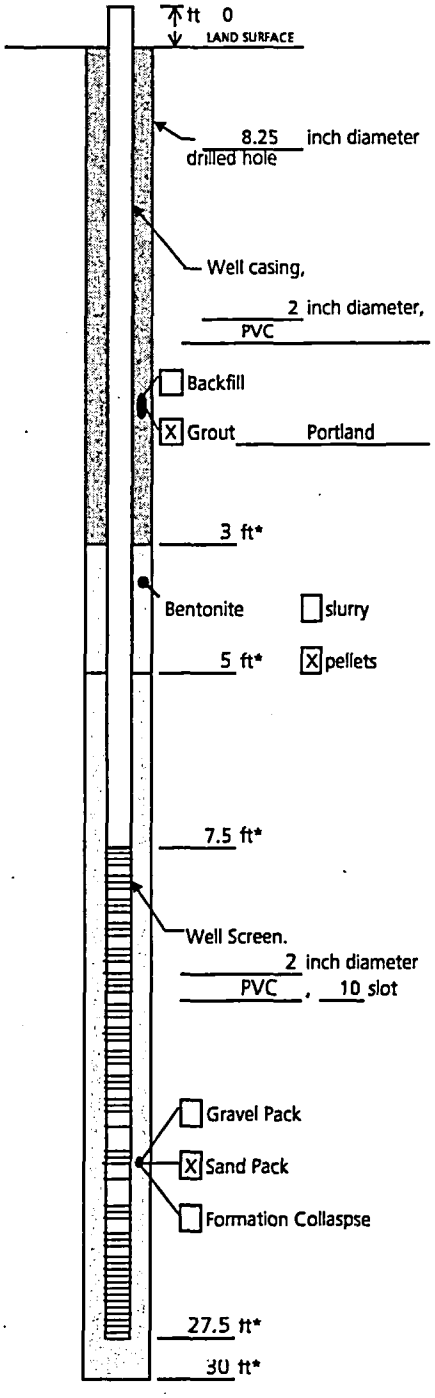

Measuring Point is Top of Well Casing Unless Otherwise Noted.

* Depth Below Land Surface

Project Brenntag Southeast (Former Worth Chemical)

Town/City Durham

County Durham State NC

Permit No.

Land-Surface Elevation and Datum:

_____ feet ☐ Surveyed ☐ Estimated

Installation Date(s) October 4, 2001

Drilling Method Air hammer

Drilling Contractor Geologic Exploration, Inc.

Development Technique(s) and Date(s)

Submersible Pump October 4, 2001

Water Removed During Development 2 gallons

Static Depth to Water _____ feet below M.P.

DEPTH (ft bls)	DRILLING LOG Formation Description
0 - 5	Orange brown fine clayey sandy silt
5 - 10	Dark brown fine silty saprolite
10 - 15	Red brown fine silty saprolite
15 - 20	Red brown fine silty saprolite with partially weathered rock
20 - 25	White brown fine weathered siltstone
25 - 30	White brown fine weathered siltstone

Prepared by D. Tomczak/W. Plekan

ARCADIS

WELL CONSTRUCTION LOG- UNCONSOLIDATED

Well MW-6

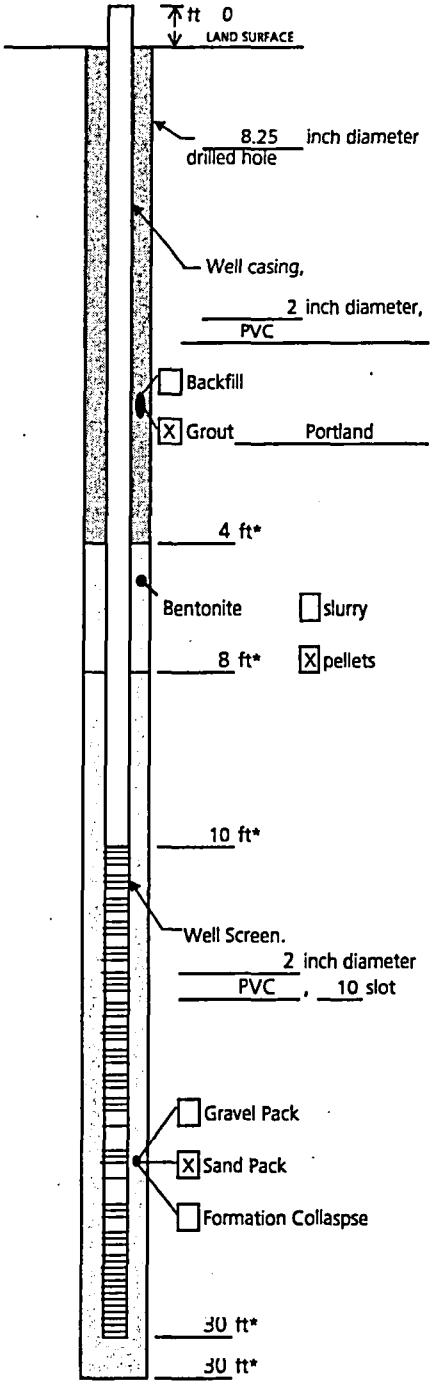

Measuring Point is Top of Well Casing Unless Otherwise Noted.

* Depth Below Land Surface

Project Brenntag Southeast (Former Worth Chemical)

Town/City Durham

County Durham State NC

Permit No.

Land-Surface Elevation and Datum:

_____ feet ☐ Surveyed ☐ Estimated

Installation Date(s) June 4, 2002

Drilling Method HSA/Air Hammer

Drilling Contractor Geologic Exploration, Inc.

Development Technique(s) and Date(s)

Bailing June 5, 2002

Water Removed During Development 10 gallons

Static Depth to Water _____ feet below M.P.

DEPTH (ft bls)	DRILLING LOG Formation Description
0 - 2	Gray coarse gravel with top soil; grass
2 - 4	No recovery - blk brown fine sandy silty clay; fill
4 - 6	No recovery - blk brown fine sandy silty clay
6 - 8	Red brown fine clayey silty saprolite; black oxidized bands; stiff
8 - 12	Red brown fine clayey silty saprolite; very stiff; mica
12 - 18	Red brown fine silty saprolite; very stiff; mica
18 - 20	Red brown fine clayey silty saprolite; very stiff; mica
20 - 22	*Red, brown and gray stratfied fine clayey silty saprolite; very stiff*
22 - 24	Tan, white and black fine-to-medium silty weathered rock
24 - 25	Tan, white and black fine-to-medium silty weathered rock; manganese stains
25 - 28	Brown fine-to-medium weathered siltstone; wet
28 - 30	*Pink white fine weathered siltstone*

Prepared by D. Tomczak

ARCADIS

WELL CONSTRUCTION LOG- UNCONSOLIDATED

Well MW-7

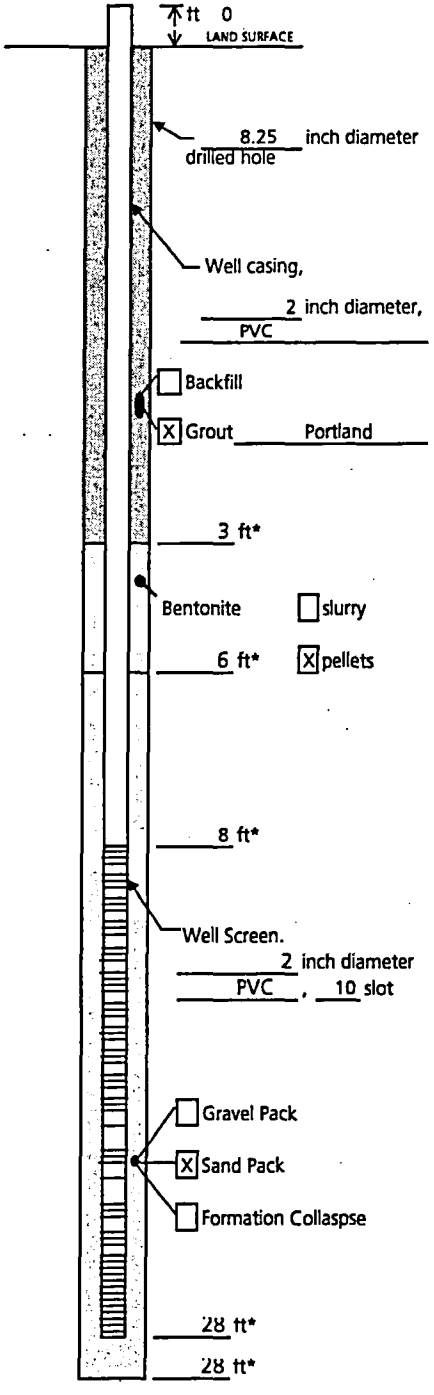

Measuring Point is Top of Well Casing Unless Otherwise Noted.

* Depth Below Land Surface

Project Brenntag Southeast (Former Worth Chemical)

Town/City Durham

County Durham State NC

Permit No.

Land-Surface Elevation and Datum:

_____ feet ☐ Surveyed ☐ Estimated

Installation Date(s) June 4, 2002

Drilling Method HSA/Air Hammer

Drilling Contractor Geologic Exploration, Inc.

Development Technique(s) and Date(s)

Bailing June 5, 2002

Water Removed During Development 10 gallons

Static Depth to Water _____ feet below M.P.

DEPTH (ft bls)	DRILLING LOG Formation Description
0 - 1	Gray coarse gravel
1 - 3	Brown orange fine sandy clayey silt; mica; stiff; fill
3 - 5	Brown and white fine sandy clayey silt; gravel; fill
5 - 7	Pink brownfine sandy clayey silty saprolite; stiff
7 - 9	Red brown fine silty saprolitic material
9 - 11	Brown, red and gray fine sandy silty clay; moist; fill
11 - 15	Red, brown and gray mottled fine clayey silty saprolite; black oxidized bands; stiff
15 - 19	Pink, brown and gray fine clayey silty saprolite; stiff
19 - 21	Red brown fine silty saprolite; very stiff; mica
21 - 22	Brown fine clayey silty saprolite; moist
22 - 23	Red brown fine clayey silty saprolite; stiff
23 - 24	Brown fine-to-medium sandy clayey silt; wet
24 - 25	Red brown fine clayey silty sapolite; stiff
25 - 26	Pink, red and brown fine clayey silty saprolite; very stiff
26 - 28	Red brown fine weathered siltstone

Prepared by D. Tomczak

ARCADIS

WELL CONSTRUCTION LOG- TELESCOPING

Well MW-8D

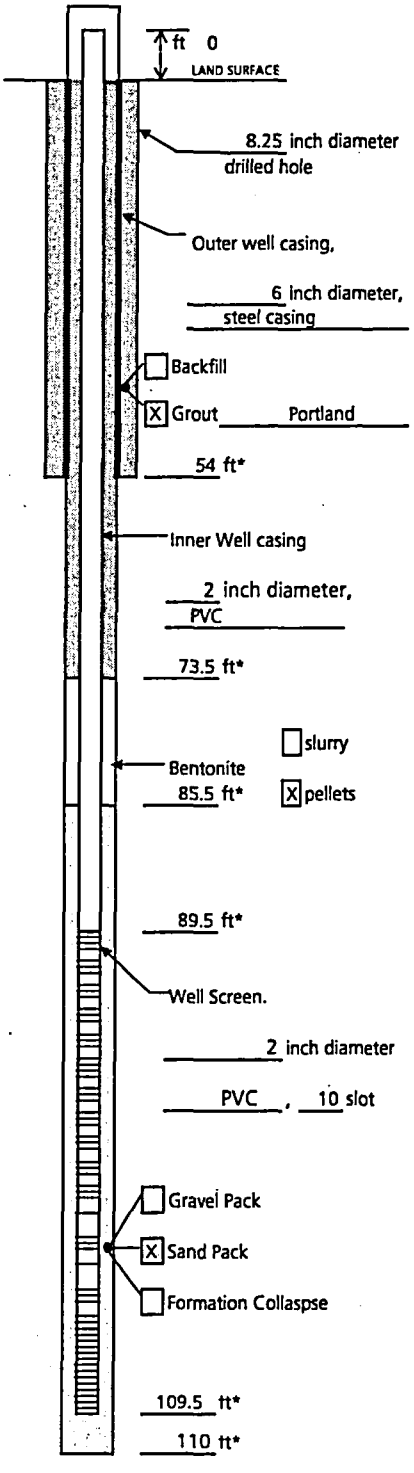

Project Brenntag Southeast (Former Worth Chemical)

Town/City Durham

County Durham State NC

Permit No.

Land-Surface Elevation and Datum:

feet ☐ Surveyed ☐ Estimated

Installation Date(s) June 19, 2002

Drilling Method Air Hammer

Drilling Contractor Geologic Exploration, Inc.

Development Technique(s) and Date(s)

Bailing June 20, 2002

Water Removed During Development 2.4 gallons

Static Depth to Water feet below M.P.

DEPTH (ft bls)	DRILLING LOG Formation Description
0 - 5	Brown tan mottled fine sandy clayey silt
5 - 20	Red brown fine silty saprolite; trace of clay
20 - 30	Pink, red and brown fine weathered siltstone
30 - 35	Dark brown weathered siltstone; moist
35 - 40	Dark brown weathered siltstone
40 - 45	Pink brown weathered siltstone; less competent
45 - 54	Pink, gray and brown weathered siltstone; less competent
54 - 68	Red fine micaceous weathered siltstone
68 - 86	Pink fine micaceous weathered siltstone
86 - 90	Red fine micaceous weathered siltstone
90 - 102	Red fine micaceous weathered siltstone
102 - 110	Pink fine micaceous weathered siltstone

Measuring Point is Top of Well Casing Unless Otherwise Noted.

Prepared by D. Tomczak

* Depth Below Land Surface

ARCADIS

WELL CONSTRUCTION LOG- UNCONSOLIDATED

Well MW-9

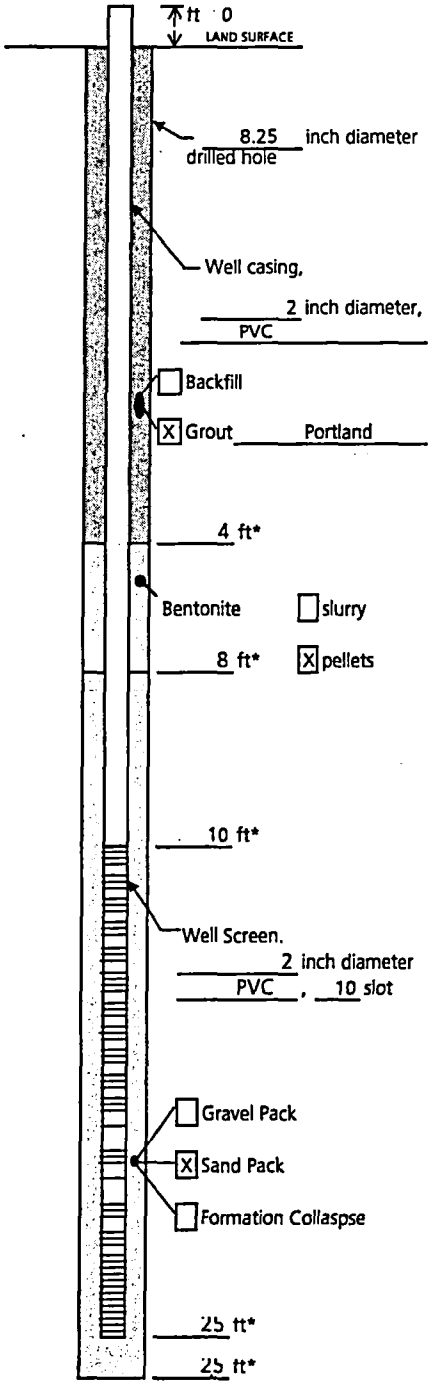

Measuring Point is Top of Well Casing Unless Otherwise Noted.

* Depth Below Land Surface

Project Brenntag Southeast (Former Worth Chemical)

Town/City Durham

County Durham State NC

Permit No.

Land-Surface Elevation and Datum:

_____ feet ☐ Surveyed ☐ Estimated

Installation Date(s) June 4, 2002

Drilling Method HSA/Air Hammer

Drilling Contractor Geologic Exploration, Inc.

Development Technique(s) and Date(s)

Bailing June 5, 2002

Water Removed During Development 10 gallons

Static Depth to Water _____ feet below M.P.

DEPTH (ft bls)	DRILLING LOG Formation Description
0 - 1	Brown and black silty clayey sandy top soil
1 - 2.5	Pink, black and white fine-to-medium weathered siltstone; biotite
2.5 - 10	Pink, tan and white fine-to-medium sandy clayey silt
10 - 21	Red brown fine clayey silty saprolite
21 - 25	Pink, red and brown fine clayey silty saprolite

Prepared by D. Tomczak

ARCADIS

WELL CONSTRUCTION LOG- UNCONSOLIDATED

Well MW-10

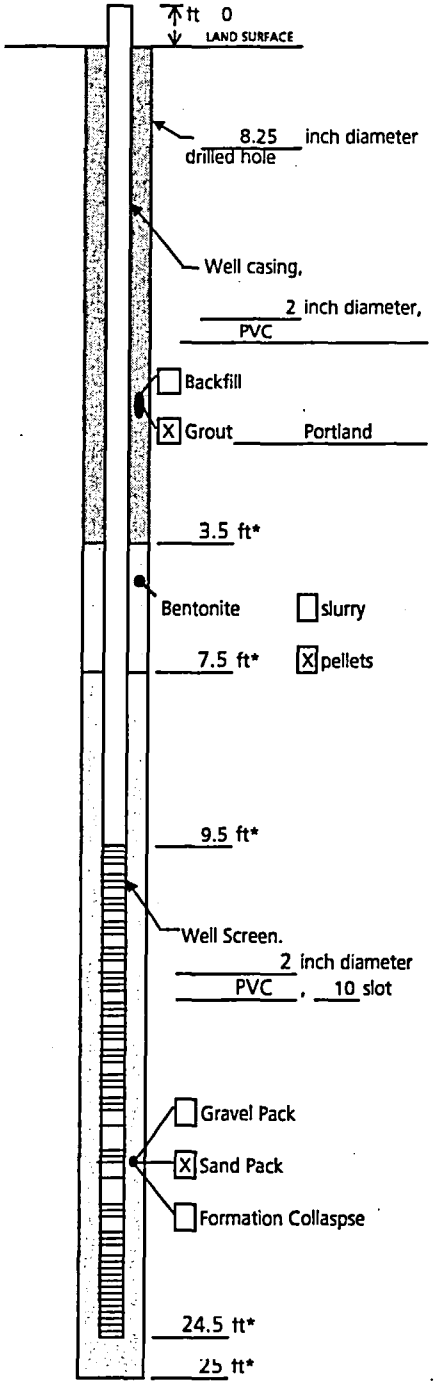

Measuring Point is Top of Well Casing Unless Otherwise Noted.

* Depth Below Land Surface

Project Brenntag Southeast (Former Worth Chemical)

Town/City Durham

County Durham State NC

Permit No.

Land-Surface Elevation and Datum:

_____ feet ☐ Surveyed ☐ Estimated

Installation Date(s) June 4, 2002

Drilling Method HSA/Air Hammer

Drilling Contractor Geologic Exploration, Inc.

Development Technique(s) and Date(s)

Bailing June 5, 2002

Water Removed During Development 10 gallons

Static Depth to Water _____ feet below M.P.

DEPTH (ft bls)	DRILLING LOG Formation Description
0 - 2	Black and brown fine-to-medium sandy clayey silty; top soil; grass
2 - 7	Black and brown fine-to-medium sandy clayey silt with weathered rock
7 - 11	Black and brown fine-to-medium sandy silty clay with weathered rock
11 - 14	White fine clayey silty saprolite
14 - 21	Pink fine clayey silty saprolite
21 - 25	Red fine clayey weathered siltstone; wet

Prepared by D. Tomczak

ARCADIS

WELL CONSTRUCTION LOG- UNCONSOLIDATED

Well MW-11

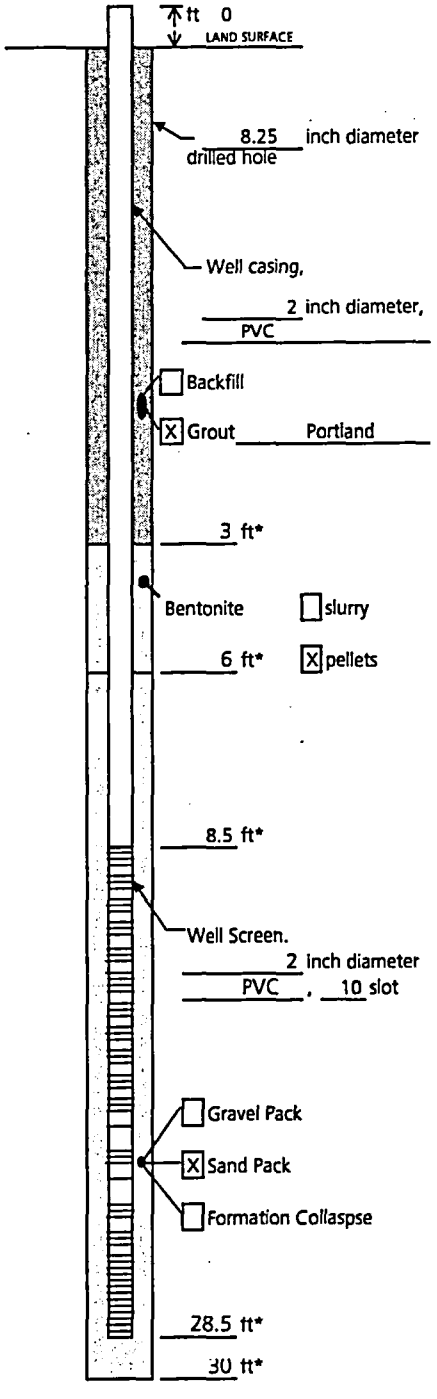

Measuring Point is Top of Well Casing Unless Otherwise Noted.

* Depth Below Land Surface

Project Brenntag Southeast (Former Worth Chemical)

Town/City Durham

County Durham State NC

Permit No.

Land-Surface Elevation and Datum:

_____ feet ☐ Surveyed ☐ Estimated

Installation Date(s) June 5, 2002

Drilling Method HSA/Air Hammer

Drilling Contractor *Geologic Exploration, Inc.*

Development Technique(s) and Date(s)

Bailing June 5, 2002

Water Removed During Development 10 gallons

Static Depth to Water _____ feet below M.P.

DEPTH (ft bls)	DRILLING LOG Formation Description
0 - 2	Gray brown fine sandy clayey silt; gravel; grass
2 - 7	Brown and gray mottled fine clayey silt with weathered rock
7 - 11	Brown fine clayey silty saprolite with weathered rock; very stiff
11 - 16	Red brown fine weathered siltstone
16 - 19	Light tan fine weathered siltstone; trace of clay
19 - 24	Dark brown fine-to-coarse weathered siltstone
24 - 28	Gray fine-to-coarse weathered siltstone
28 - 30	Dark brown fine-to-coarse weathered siltstone

Prepared by D. Tomczak

WELL CONSTRUCTION RECORD

North Carolina – Department of Environmental and Natural Resources – Division of Water Quality – Groundwater Section

WELL CONTRACTOR (INDIVIDUAL) NAME (print) MIKE MCCONAHEY CERTIFICATION # 2402

WELL CONTRACTOR COMPANY NAME GEOLOGIC EXPLORATION, INC. PHONE # (704) 872-7686

STATE WELL CONSTRUCTION PERMIT# (if applicable) _____ ASSOCIATED WQ PERMIT# (if applicable) _____

1. WELL USE (Check Applicable Box): Residential ☐ Municipal/Public ☐ Industrial ☐ Agricultural ☐
Monitoring ☒ Recovery ☐ Heat Pump Water Injection ☐ Other ☐ If Other, list Use _____

2. WELL LOCATION:
Nearest Town: DURHAM County DURHAM
2418 EAST PETTIGREW STREET
(Street Name, Numbers, Community, Subdivision, Lot No., Zip Code)

Topographic/Land setting
☐ Ridge ☐ Slope ☐ Valley ☒ Flat
(check appropriate box)
Latitude/longitude of well location
_____
(degrees/minutes/seconds)
Latitude/longitude source: ☐ GPS ☐ Topographic map
(check box)

3. OWNER: BRENNTAG SOUTHEAST, INC.
Address 2000 EAST PETTIGREW STREET
(Street or Route No.)
DURHAM NC 27703
City or Town State Zip Code
( ) _____
Area Code – Phone Number

4. DATE DRILLED 10-03-01
5. TOTAL DEPTH: 25.0 FEET
6. DOES WELL REPLACE EXISTING WELL? YES ☐ NO ☒
7. STATIC WATER LEVEL Below Top of Casing: _____ FT.
(Use "+" if Above Top of Casing)
8. TOP OF CASING IS 0.0 FT. Above Land Surface*
*Top of casing terminated at/or below land surface requires a variance in accordance with 15A NCAC 2C .0118.
9. YIELD (gpm): N/A METHOD OF TEST N/A
10. WATER ZONES (depth): N/A
11. DISINFECTION: Type N/A Amount _____

DRILLING LOG

DEPTH From	To	Formation Description
0.0	1.0	CONCRETE / GRAVEL
1.0	4.0	YELLOW CLAY
4.0	13.0	RED CLAY / MUDSTONE
13.0	25.0	MUDSTONE

12. CASING:

	Depth			Diameter	Wall Thickness or Weight/Ft.	Material
From 0.0	To 5.0	Ft		2 INCH	SCH 40	PVC
From	To	Ft.				
From	To	Ft.				

13. Grout:

	Depth			Material	Method
From 0.0	To 1.0	Ft.		Portland Bentonite	Slurry
From	To	Ft.			

14. SCREEN:

	Depth			Diameter		Slot Size		Material
From 5.0	To 25.0	Ft.		2.0	in.	.010	in	PVC
From	To	Ft.			in.		in	

15. SAND/GRAVEL PACK:

	Depth			Size	Material
From 3.0	To 25.0	Ft.		20-40	FINE SILICA SAND
From	To	Ft.			

LOCATION SKETCH
Show direction and distance in miles from at least two State Roads or County Roads, inculed the road numbers and common road names.

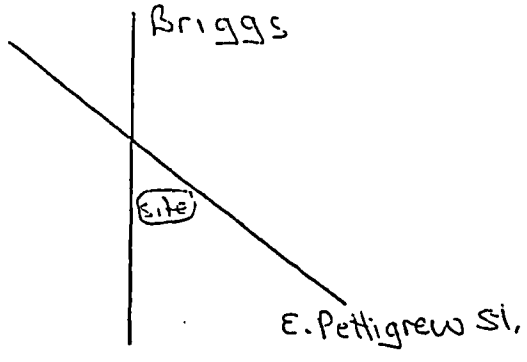

16. REMARKS: MW-1 BENTONITE SEAL FROM 1.0 TO 3.0 FEET

I DO HEARBY CERTIFY THAT THIS WELL WAS CONSTRUCTED IN ACCORDANCE WITH 15A NCAC 2C, WELL CONSTRUCTION STANDARDS, AND THAT A COPY OF THIS RECORD HAS BEEN PROVIDED TO THE WELL OWNER

Mike McConahey 11/15/01

SIGNATURE OF PERSON CONSTRUCTING THE WELL DATE

Submit the original to the Division of Water Quality, Groundwater Section, 1636 Mail Service Center – Raleigh, NC 27699-1636 Phone No. (919) 733-3221, within 30 days.

GW-1 REV. 07/2001

WELL CONSTRUCTION RECORD

North Carolina – Department of Environmental and Natural Resources – Division of Water Quality – Groundwater Section

WELL CONTRACTOR (INDIVIDUAL) NAME (print) MIKE MCCONAHEY CERTIFICATION # 2402

WELL CONTRACTOR COMPANY NAME GEOLOGIC EXPLORATION, INC. PHONE # (704) 872-7686

STATE WELL CONSTRUCTION PERMIT# (if applicable) _____ ASSOCIATED WQ PERMIT# (if applicable) _____

1. WELL USE (Check Applicable Box): Residential ☐ Municipal/Public ☐ Industrial ☐ Agricultural ☐
Monitoring ☒ Recovery ☐ Heat Pump Water Injection ☐ Other ☐ If Other, list Use _____

2. WELL LOCATION:
Nearest Town: DURHAM County DURHAM
2418 EAST PETTIGREW STREET
(Street Name, Numbers, Community, Subdivision, Lot No., Zip Code)

Topographic/Land setting
☐ Ridge ☐ Slope ☐ Valley ☒ Flat
(check appropriate box)
Latitude/longitude of well location
_____
(degrees/minutes/seconds)
Latitude/longitude source: ☐ GPS ☐ Topographic map
(check box)

3. OWNER: BRENNTAG SOUTHEAST, INC.
Address 2000 EAST PETTIGREW STREET
(Street or Route No.)
DURHAM NC 27703
City or Town State Zip Code
( )
Area Code – Phone Number

4. DATE DRILLED 10-03-01
5. TOTAL DEPTH: 28.5 FEET
6. DOES WELL REPLACE EXISTING WELL? YES ☐ NO ☒
7. STATIC WATER LEVEL Below Top of Casing: _____ FT.
(Use "+" if Above Top of Casing)
8. TOP OF CASING IS 0.0 FT. Above Land Surface*
*Top of casing terminated at/or below land surface requires a variance in accordance with 15A NCAC 2C .0118.
9. YIELD (gpm): N/A METHOD OF TEST N/A
10. WATER ZONES (depth): N/A
11. DISINFECTION: Type N/A Amount _____
12. CASING:

	Depth			Diameter	Wall Thickness or Weight/Ft.	Material
From 0.0	To 8.5	Ft	2 INCH	SCH 40	PVC
From _____	To _____	Ft.			
From _____	To _____	Ft.			

13. Grout:

	Depth			Material	Method
From 0.0	To 4.5	Ft.	Portland Bentonite	Slurry
From _____	To _____	Ft.		

14. SCREEN:

	Depth			Diameter		Slot Size		Material
From 8.5	To 28.5	Ft.	2.0	in.	.010	in	PVC
From _____	To _____	Ft.	_____	in.	_____	in	_____

15. SAND/GRAVEL PACK:

	Depth			Size	Material
From 6.5	To 28.5	Ft.	20-40	FINE SILICA SAND
From _____	To _____	Ft.	_____	_____

16. REMARKS: MW-2 BENTONITE SEAL FROM 4.5 TO 6.5 FEET

DRILLING LOG

DEPTH From	DEPTH To	Formation Description
0.0	1.0	CONCRETE / GRAVEL
1.0	4.0	YELLOW CLAY
4.0	13.0	RED CLAY / MUDSTONE
13.0	30.0	MUDSTONE

LOCATION SKETCH
Show direction and distance in miles from at least two State Roads or County Roads, inculed the road numbers and common road names.

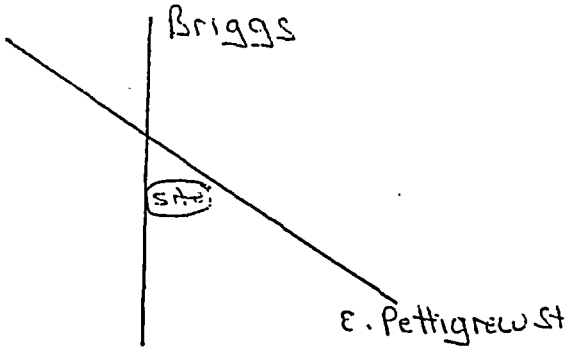

I DO HEARBY CERTIFY THAT THIS WELL WAS CONSTRUCTED IN ACCORDANCE WITH 15A NCAC 2C, WELL CONSTRUCTION STANDARDS, AND THAT A COPY OF THIS RECORD HAS BEEN PROVIDED TO THE WELL OWNER

Mike McConahey 11/15/01
SIGNATURE OF PERSON CONSTRUCTING THE WELL DATE

Submit the original to the Division of Water Quality, Groundwater Section, 1636 Mail Service Center – Raleigh, NC 27699-1636 Phone No. (919) 733-3221, within 30 days.

GW-1 REV. 07/2001

WELL CONSTRUCTION RECORD

North Carolina – Department of Environmental and Natural Resources – Division of Water Quality – Groundwater Section

WELL CONTRACTOR (INDIVIDUAL) NAME (print) MIKE MCCONAHEY CERTIFICATION # 2402

WELL CONTRACTOR COMPANY NAME GEOLOGIC EXPLORATION, INC. PHONE # (704) 872-7686

STATE WELL CONSTRUCTION PERMIT# (if applicable) _____ ASSOCIATED WQ PERMIT# (if applicable) _____

1. WELL USE (Check Applicable Box): Residential ☐ Municipal/Public ☐ Industrial ☐ Agricultural ☐
Monitoring ☒ Recovery ☐ Heat Pump Water Injection ☐ Other ☐ If Other, list Use _____

2. WELL LOCATION:
Nearest Town: DURHAM County DURHAM
2418 EAST PETTIGREW STREET
(Street Name, Numbers, Community, Subdivision, Lot No., Zip Code)

Topographic/Land setting
☐ Ridge ☐ Slope ☐ Valley ☒ Flat
(check appropriate box)
Latitude/longitude of well location
_____
(degrees/minutes/seconds)
Latitude/longitude source: ☐ GPS ☐ Topographic map
(check box)

3. OWNER: BRENNTAG SOUTHEAST, INC.
Address 2000 EAST PETTIGREW STREET
(Street or Route No.)
DURHAM NC 27703
City or Town State Zip Code
( )
Area Code – Phone Number

4. DATE DRILLED 10-04-01
5. TOTAL DEPTH: 29.0 FEET
6. DOES WELL REPLACE EXISTING WELL? YES ☐ NO ☒
7. STATIC WATER LEVEL Below Top of Casing: _____ FT.
(Use "+" if Above Top of Casing)
8. TOP OF CASING IS 0.0 FT. Above Land Surface*
*Top of casing terminated at/or below land surface requires a variance in accordance with 15A NCAC 2C .0118.
9. YIELD (gpm): N/A METHOD OF TEST N/A
10. WATER ZONES (depth): N/A
11. DISINFECTION: Type N/A Amount _____
12. CASING:

	Depth			Diameter	Wall Thickness or Weight/Ft.	Material
From	0.0	To 9.0	Ft	2 INCH	SCH 40	PVC
From		To	Ft.			
From		To	Ft.			

13. Grout:

	Depth			Material	Method
From	0.0	To 5.0	Ft.	Portland Bentonite	Slurry
From		To	Ft.		

14. SCREEN:

	Depth			Diameter		Slot Size		Material
From	9.0	To 29.0	Ft.	2.0	in.	.010	in	PVC
From		To	Ft.		in.		in	

15. SAND/GRAVEL PACK:

	Depth			Size	Material
From	7.0	To 29.0	Ft.	20-40	FINE SILICA SAND
From		To	Ft.		

DEPTH From	To	DRILLING LOG Formation Description
0.0	1.0	CONCRETE / GRAVEL
1.0	4.0	YELLOW CLAY
4.0	13.0	RED CLAY / MUDSTONE
13.0	30.0	MUDSTONE

LOCATION SKETCH
Show direction and distance in miles from at least two State Roads or County Roads, inculed the road numbers and common road names.

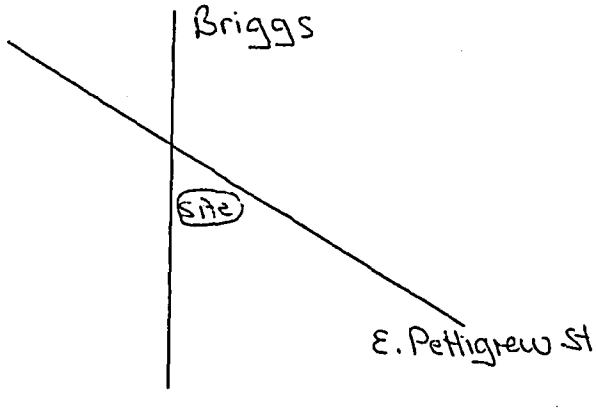

16. REMARKS: MW-3 BENTONITE SEAL FROM 5.0 TO 7.0 FEET

I DO HEARBY CERTIFY THAT THIS WELL WAS CONSTRUCTED IN ACCORDANCE WITH 15A NCAC 2C, WELL CONSTRUCTION STANDARDS, AND THAT A COPY OF THIS RECORD HAS BEEN PROVIDED TO THE WELL OWNER

Mike McConahey 11/15/01
SIGNATURE OF PERSON CONSTRUCTING THE WELL DATE

Submit the original to the Division of Water Quality, Groundwater Section, 1636 Mail Service Center – Raleigh, NC 27699-1636 Phone No. (919) 733-3221, within 30 days.

GW-1 REV. 07/2001

WELL CONSTRUCTION RECORD

North Carolina – Department of Environmental and Natural Resources – Division of Water Quality – Groundwater Section

WELL CONTRACTOR (INDIVIDUAL) NAME (print) MIKE MCCONAHEY CERTIFICATION # 2402

WELL CONTRACTOR COMPANY NAME GEOLOGIC EXPLORATION, INC. PHONE # (704) 872-7686

STATE WELL CONSTRUCTION PERMIT# (if applicable) _____ ASSOCIATED WQ PERMIT# (if applicable) _____

1. WELL USE (Check Applicable Box): Residential ☐ Municipal/Public ☐ Industrial ☐ Agricultural ☐
Monitoring ☒ Recovery ☐ Heat Pump Water Injection ☐ Other ☐ If Other, list Use _____

2. WELL LOCATION:
Nearest Town: DURHAM County DURHAM
2418 EAST PETTIGREW STREET
(Street Name, Numbers, Community, Subdivision, Lot No., Zip Code)

Topographic/Land setting
☐ Ridge ☐ Slope ☐ Valley ☒ Flat
(check appropriate box)
Latitude/longitude of well location
_____
(degrees/minutes/seconds)
Latitude/longitude source: ☐ GPS ☐ Topographic map
(check box)

3. OWNER: BRENNTAG SOUTHEAST, INC.
Address 2000 EAST PETTIGREW STREET
(Street or Route No.)
DURHAM NC 27703
City or Town State Zip Code
( ) _____
Area Code – Phone Number

4. DATE DRILLED 10-04-01
5. TOTAL DEPTH: 29.0 FEET
6. DOES WELL REPLACE EXISTING WELL? YES ☐ NO ☒
7. STATIC WATER LEVEL Below Top of Casing: _____ FT.
(Use "+" if Above Top of Casing)
8. TOP OF CASING IS 0.0 FT. Above Land Surface*
*Top of casing terminated at/or below land surface requires a variance in accordance with 15A NCAC 2C .0118.
9. YIELD (gpm): N/A METHOD OF TEST N/A
10. WATER ZONES (depth): N/A
11. DISINFECTION: Type N/A Amount _____

DEPTH From	DEPTH To	DRILLING LOG Formation Description
0.0	1.0	CONCRETE / GRAVEL
1.0	4.0	YELLOW CLAY
4.0	13.0	RED CLAY / MUDSTONE
13.0	30.0	MUDSTONE

12. CASING:

	Depth			Diameter	Wall Thickness or Weight/Ft.	Material
From	0.0	To	9.0 Ft	2 INCH	SCH 40	PVC
From		To	Ft.			
From		To	Ft.			

13. Grout:

	Depth			Material	Method
From	0.0	To	5.0 Ft.	Portland Bentonite	Slurry
From		To	Ft.		

14. SCREEN:

	Depth			Diameter		Slot Size		Material
From	9.0	To	29.0 Ft.	2.0	in.	.010	in	PVC
From		To	Ft.		in.		in	

15. SAND/GRAVEL PACK:

	Depth			Size	Material
From	7.0	To	29.0 Ft.	20-40	FINE SILICA SAND
From		To	Ft.		

LOCATION SKETCH
Show direction and distance in miles from at least two State Roads or County Roads, inculed the road numbers and common road names.

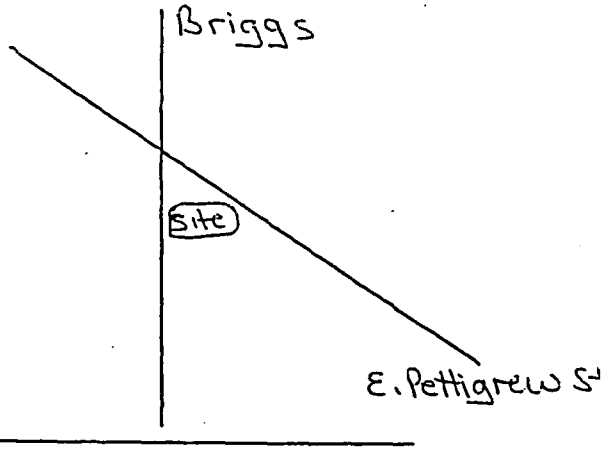

16. REMARKS: MW-4 BENTONITE SEAL FROM 5.0 TO 7.0 FEET

I DO HEARBY CERTIFY THAT THIS WELL WAS CONSTRUCTED IN ACCORDANCE WITH 15A NCAC 2C, WELL CONSTRUCTION STANDARDS, AND THAT A COPY OF THIS RECORD HAS BEEN PROVIDED TO THE WELL OWNER

Mike McConahey 11/15/01

SIGNATURE OF PERSON CONSTRUCTING THE WELL DATE

Submit the original to the Division of Water Quality, Groundwater Section, 1636 Mail Service Center – Raleigh, NC 27699-1636 Phone No. (919) 733-3221, within 30 days.

GW-1 REV. 07/2001

WELL CONSTRUCTION RECORD

RECEIVED
NOV 19 2001
ARCADIS G&M of North Carolina, Inc.

North Carolina -- Department of Environmental and Natural Resources – Division of Water Quality – Groundwater Section

WELL CONTRACTOR (INDIVIDUAL) NAME (print) MIKE MCCONAHEY CERTIFICATION # 2402

WELL CONTRACTOR COMPANY NAME GEOLOGIC EXPLORATION, INC. PHONE # (704) 872-7886

STATE WELL CONSTRUCTION PERMIT# (if applicable) _____ ASSOCIATED WQ PERMIT# (if applicable) _____

1. WELL USE (Check Applicable Box): Residential ☐ Municipal/Public ☐ Industrial ☐ Agricultural ☐
Monitoring ☒ Recovery ☐ Heat Pump Water Injection ☐ Other ☐ If Other, list Use _____

2. WELL LOCATION:
Nearest Town: DURHAM County DURHAM
2418 EAST PETTIGREW STREET
(Street Name, Numbers, Community, Subdivision, Lot No., Zip Code)

Topographic/Land setting
☐ Ridge ☐ Slope ☐ Valley ☒ Flat
(check appropriate box)
Latitude/longitude of well location
_____
(degrees/minutes/seconds)
Latitude/longitude source: ☐ GPS ☐ Topographic map
(check box)

3. OWNER: BRENNTAG SOUTHEAST, INC.
Address 2000 EAST PETTIGREW STREET
(Street or Route No.)
DURHAM NC 27703
City or Town State Zip Code
( )
Area Code – Phone Number

4. DATE DRILLED 10-04-01
5. TOTAL DEPTH: 27.0 FEET
6. DOES WELL REPLACE EXISTING WELL? YES ☐ NO ☒
7. STATIC WATER LEVEL Below Top of Casing: _____ FT.
(Use "+" if Above Top of Casing)
8. TOP OF CASING IS 0.0 FT. Above Land Surface*
*Top of casing terminated at/or below land surface requires a variance in accordance with 15A NCAC 2C .0118.
9. YIELD (gpm): N/A METHOD OF TEST N/A
10. WATER ZONES (depth): N/A
11. DISINFECTION: Type N/A Amount _____

DEPTH From	To	DRILLING LOG Formation Description
0.0	1.0	CONCRETE / GRAVEL
1.0	4.0	YELLOW CLAY
4.0	13.0	RED CLAY / MUDSTONE
13.0	29.0	MUDSTONE

12. CASING:

	Depth From	To	Ft	Diameter	Wall Thickness or Weight/Ft.	Material
	0.0	7.0	Ft	2 INCH	SCH 40	PVC
			Ft.			
			Ft.			

13. Grout:

	Depth From	To	Ft.	Material	Method
	0.0	3.0	Ft.	Portland Bentonite	Slurry
			Ft.		

14. SCREEN:

	Depth From	To	Ft.	Diameter	Slot Size	Material
	7.0	27.0	Ft.	2.0 in.	.010 in	PVC
			Ft.	in.	in	

15. SAND/GRAVEL PACK:

	Depth From	To	Ft.	Size	Material
	5.0	27.0	Ft.	20-40	FINE SILICA SAND
			Ft.		

LOCATION SKETCH
Show direction and distance in miles from at least two State Roads or County Roads, inculed the road numbers and common road names.

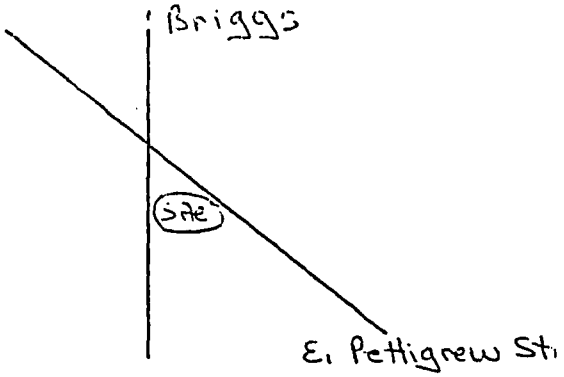

16. REMARKS: MW-5 BENTONITE SEAL FROM 3.0 TO 5.0 FEET

I DO HEARBY CERTIFY THAT THIS WELL WAS CONSTRUCTED IN ACCORDANCE WITH 15A NCAC 2C, WELL CONSTRUCTION STANDARDS, AND THAT A COPY OF THIS RECORD HAS BEEN PROVIDED TO THE WELL OWNER

Mike McConahey 11/15/01

SIGNATURE OF PERSON CONSTRUCTING THE WELL DATE

Submit the original to the Division of Water Quality, Groundwater Section, 1636 Mail Service Center – Raleigh, NC 27699-1636 Phone No. (919) 733-3221, within 30 days.

GW-1 REV. 07/2001

WELL CONSTRUCTION RECORD

North Carolina – Department of Environmental and Natural Resources – Division of Water Quality – Groundwater Section

WELL CONTRACTOR (INDIVIDUAL) NAME (print) MIKE MCCONAHEY CERTIFICATION # 2402

WELL CONTRACTOR COMPANY NAME GEOLOGIC EXPLORATION, INC. PHONE # (704) 872-7686

STATE WELL CONSTRUCTION PERMIT# (if applicable) WM0500483 ASSOCIATED WQ PERMIT# (if applicable)

1. WELL USE (Check Applicable Box): Residential ☐ Municipal/Public ☐ Industrial ☐ Agricultural ☐
Monitoring ☒ Recovery ☐ Heat Pump Water Injection ☐ Other ☐ If Other, list Use

2. WELL LOCATION:
Nearest Town: DURHAM County DURHAM
S. BRIGGS AVENUE/NC 147 (DURHAM FREEWAY)
(Street Name, Numbers, Community, Subdivision, Lot No., Zip Code)

Topographic/Land setting
☐ Ridge ☐ Slope ☐ Valley ☒ Flat
(check appropriate box)
Latitude/longitude of well location
(degrees/minutes/seconds)
Latitude/longitude source: ☐ GPS ☐ Topographic map
(check box)

3. OWNER: BRUCE D. BIEHL/BRENNTAG SOUTHEAST, INC.
Address 2000 EAST PETTGREW STREET
(Street or Route No.)
DURHAM NC 27330
City or Town State Zip Code
( )
Area Code – Phone Number

4. DATE DRILLED 06-04-02
5. TOTAL DEPTH: 30.0 FEET
6. DOES WELL REPLACE EXISTING WELL? YES ☐ NO ☒
7. STATIC WATER LEVEL Below Top of Casing: FT.
(Use "+" if Above Top of Casing)
8. TOP OF CASING IS 0.0 FT. Above Land Surface*
*Top of casing terminated at/or below land surface requires a variance in accordance with 15A NCAC 2C .0118.
9. YIELD (gpm): N/A METHOD OF TEST N/A
10. WATER ZONES (depth): N/A
11. DISINFECTION: Type N/A Amount

DRILLING LOG

DEPTH From	DEPTH To	Formation Description
0.0'	2.0'	Gravel
2.0'	15.0'	Brown/Red Sandy Silt
15.0'	20.0'	Grey/White Sandy Silt
20.0'	30.0'	Brown/Red Sandy Silt

12. CASING:

	Depth			Diameter	Wall Thickness or Weight/Ft.	Material
From	0.0'	To 10.0'	Ft	2 INCH	SCH 40	PVC
From		To	Ft.			
From		To	Ft.			

13. Grout:

	Depth			Material	Method
From	0.0'	To 4.0'	Ft.	Portland Bentonite	Slurry
From		To	Ft.		

14. SCREEN:

	Depth			Diameter		Slot Size		Material
From	10.0'	To 30.0'	Ft.	2.0	in.	.010	in	PVC
From		To	Ft.		in.		in	

15. SAND/GRAVEL PACK:

	Depth			Size	Material
From	8.0'	To 30.0'	Ft.	20-40	FINE SILICA SAND
From		To	Ft.		

LOCATION SKETCH
Show direction and distance in miles from at least two State Roads or County Roads, inculed the road numbers and common road names.

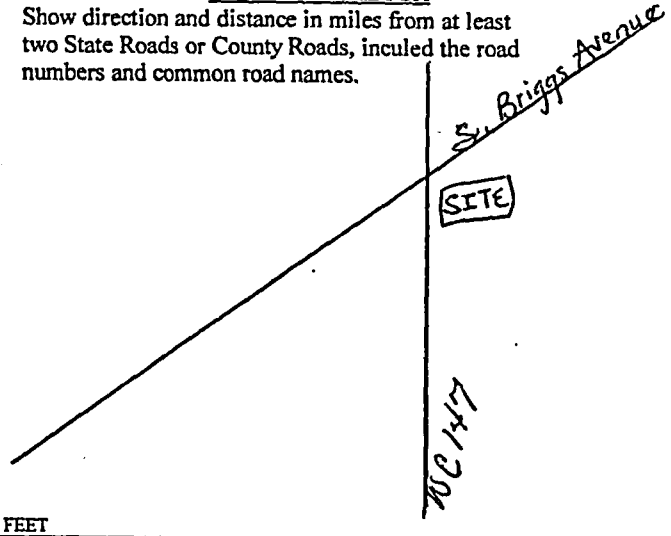

16. REMARKS: MW-6 BENTONITE SEAL FROM 4.0 TO 8.0 FEET

I DO HEARBY CERTIFY THAT THIS WELL WAS CONSTRUCTED IN ACCORDANCE WITH 15A NCAC 2C, WELL CONSTRUCTION STANDARDS, AND THAT A COPY OF THIS RECORD HAS BEEN PROVIDED TO THE WELL OWNER

Mike McConahey 6/13/02
SIGNATURE OF PERSON CONSTRUCTING THE WELL DATE

Submit the original to the Division of Water Quality, Groundwater Section, 1636 Mail Service Center – Raleigh, NC 27699-1636 Phone No. (919) 733-3221, within 30 days.

GW-1 REV. 07/2001

WELL CONSTRUCTION RECORD

North Carolina – Department of Environmental and Natural Resources – Division of Water Quality – Groundwater Section

WELL CONTRACTOR (INDIVIDUAL) NAME (print) MIKE MCCONAHEY CERTIFICATION # 2402

WELL CONTRACTOR COMPANY NAME GEOLOGIC EXPLORATION, INC. PHONE # (704) 872-7686

STATE WELL CONSTRUCTION PERMIT# (if applicable) WM0500483 ASSOCIATED WQ PERMIT# (if applicable)

1. WELL USE (Check Applicable Box): Residential ☐ Municipal/Public ☐ Industrial ☐ Agricultural ☐
Monitoring ☒ Recovery ☐ Heat Pump Water Injection ☐ Other ☐ If Other, list Use

2. WELL LOCATION:
Nearest Town: DURHAM County DURHAM
S. BRIGGS AVENUE/NC 147 (DURHAM FREEWAY)
(Street Name, Numbers, Community, Subdivision, Lot No., Zip Code)

Topographic/Land setting
☐ Ridge ☐ Slope ☐ Valley ☒ Flat
(check appropriate box)
Latitude/longitude of well location
(degrees/minutes/seconds)
Latitude/longitude source: ☐ GPS ☐ Topographic map
(check box)

3. OWNER: BRUCE D. BIEHL/BRENNTAG SOUTHEAST, INC.
Address 2000 EAST PETTGREW STREET
(Street or Route No.)
DURHAM NC 27330
City or Town State Zip Code
( )
Area Code – Phone Number

4. DATE DRILLED 06-03-02/06-04-02
5. TOTAL DEPTH: 28.0 FEET
6. DOES WELL REPLACE EXISTING WELL? YES ☐ NO ☒
7. STATIC WATER LEVEL Below Top of Casing: FT.
(Use "+" if Above Top of Casing)
8. TOP OF CASING IS 0.0 FT. Above Land Surface*
*Top of casing terminated at/or below land surface requires a variance in accordance with 15A NCAC 2C .0118.
9. YIELD (gpm): N/A METHOD OF TEST N/A
10. WATER ZONES (depth): N/A
11. DISINFECTION: Type N/A Amount

DEPTH From	To	DRILLING LOG Formation Description
0.0'	1.0'	Gravel
1.0'	15.0'	Brown/Red Sandy Silt
15.0'	20.0'	Grey/White Sandy Silt
20.0'	28.0'	Brown/Red Sandy Silt

12. CASING:

	Depth From	To		Diameter	Wall Thickness or Weight/Ft.	Material
From	0.0'	To 8.0'	Ft	2 INCH	SCH 40	PVC
From		To	Ft.			
From		To	Ft.			

13. Grout:

	Depth From	To		Material	Method
From	0.0'	To 3.0'	Ft.	Portland Bentonite	Slurry
From		To	Ft.		

14. SCREEN:

	Depth From	To		Diameter		Slot Size		Material
From	8.0'	To 28.0'	Ft.	2.0	in.	.010	in	PVC
From		To	Ft.		in.		in	

15. SAND/GRAVEL PACK:

	Depth From	To		Size	Material
From	6.0'	To 28.0'	Ft.	20-40	FINE SILICA SAND
From		To	Ft.		

LOCATION SKETCH
Show direction and distance in miles from at least two State Roads or County Roads, inculed the road numbers and common road names.

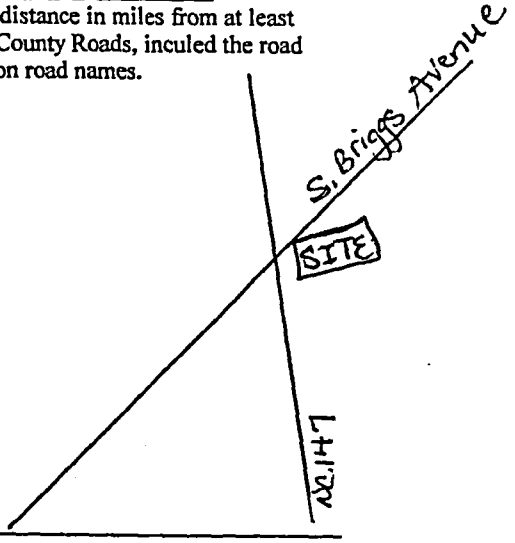

16. REMARKS: MW-7 BENTONITE SEAL FROM 3.0 TO 6.0 FEET

I DO HEARBY CERTIFY THAT THIS WELL WAS CONSTRUCTED IN ACCORDANCE WITH 15A NCAC 2C, WELL CONSTRUCTION STANDARDS, AND THAT A COPY OF THIS RECORD HAS BEEN PROVIDED TO THE WELL OWNER

Mike McConahey 6/13/02
SIGNATURE OF PERSON CONSTRUCTING THE WELL DATE

Submit the original to the Division of Water Quality, Groundwater Section, 1636 Mail Service Center – Raleigh, NC 27699-1636 Phone No. (919) 733-3221, within 30 days.

GW-1 REV. 07/2001

WELL CONSTRUCTION RECORD

North Carolina – Department of Environmental and Natural Resources – Division of Water Quality – Groundwater Section

WELL CONTRACTOR (INDIVIDUAL) NAME (print) MIKE KOPILCHAK CERTIFICATION # 3124

WELL CONTRACTOR COMPANY NAME Geologic Exploration, Inc. PHONE # (704) 872-7686

STATE WELL CONSTRUCTION PERMIT# (if applicable) _____ ASSOCIATED WQ PERMIT# (if applicable) _____

1. WELL USE (Check Applicable Box): Residential ☐ Municipal/Public ☐ Industrial ☐ Agricultural ☐
Monitoring ☒ Recovery ☐ Heat Pump Water Injection ☐ Other ☐ If Other, list Use _____

2. WELL LOCATION:
Nearest Town: DURHAM County DURHAM
S. BRIGGS AVENUE/NC 147 (DURHAM FREEWAY)
(Street Name, Numbers, Community, Subdivision, Lot No., Zip Code)

Topographic/Land setting
☐ Ridge ☐ Slope ☐ Valley ☒ Flat
(check appropriate box)
Latitude/longitude of well location
_____
(degrees/minutes/seconds)
Latitude/longitude source: ☐ GPS ☐ Topographic map
(check box)

3. OWNER: BRUCE D. BIEHL/BRENNTAG SOUTHEAST, INC.
Address 2000 EAST PETTGREW STREET
(Street or Route No.)
DURHAM NC 27330
City or Town State Zip Code
( )
Area Code – Phone Number

4. DATE DRILLED 06-19-02
5. TOTAL DEPTH: 110.0 FEET
6. DOES WELL REPLACE EXISTING WELL? YES ☐ NO ☒
7. STATIC WATER LEVEL Below Top of Casing: _____ FT.
(Use "+" if Above Top of Casing)
8. TOP OF CASING IS 0.0 FT. Above Land Surface*
*Top of casing terminated at/or below land surface requires a variance in accordance with 15A NCAC 2C .0118.
9. YIELD (gpm): N/A METHOD OF TEST N/A
10. WATER ZONES (depth): N/A
11. DISINFECTION: Type N/A Amount _____

DEPTH From	DEPTH To	DRILLING LOG Formation Description
0.0'	20.0'	BROWN SANDY CLAY
20.0'	54.0'	PARTIALLY WEATHERED ROCK
54.0'	110.0'	RED MUDSTONE

12. CASING:

	Depth			Diameter	Wall Thickness or Weight/Ft.	Material
From	0.0	To	90.0 Ft	2 INCH	SCH 40	PVC
From	0.0	To	54.0 Ft	6 INCH	SCH40	PVC
From		To	Ft			

13. Grout:

	Depth			Material	Method
From	0.0	To	90.0 Ft	Portland Bentonite	Slurry
From	0.0	To	54.0 Ft	Portland Bentonite	Slurry

14. SCREEN:

	Depth			Diameter	Slot Size	Material
From	90.0	To	110.0 Ft	2.0 in	.010 in	PVC
From		To	Ft	in	in	

15. SAND/GRAVEL PACK:

	Depth			Size	Material
From	86.0	To	110.0 Ft	20-40	FINE SILICA SAND
From		To	Ft		

LOCATION SKETCH
Show direction and distance in miles from at least two State Roads or County Roads, inculed the road numbers and common road names.

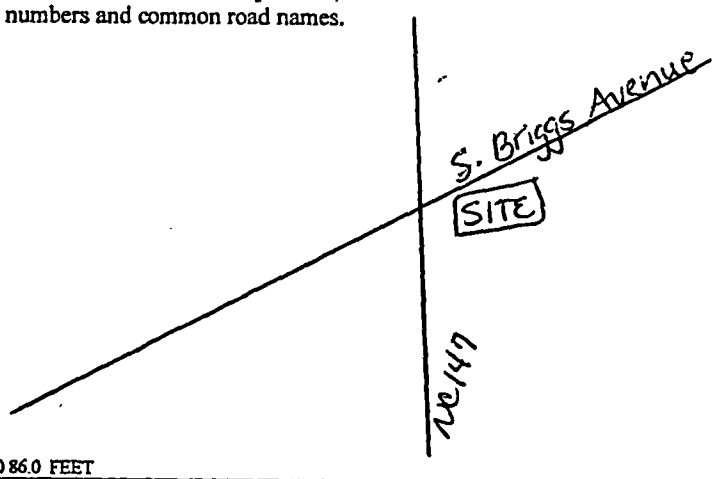

16. REMARKS: MW-8D BENTONITE SEAL FROM 74.0 TO 86.0 FEET

I DO HEARBY CERTIFY THAT THIS WELL WAS CONSTRUCTED IN ACCORDANCE WITH 15A NCAC 2C, WELL CONSTRUCTION STANDARDS, AND THAT A COPY OF THIS RECORD HAS BEEN PROVIDED TO THE WELL OWNER

Michael Kopilchak 7/2/02
SIGNATURE OF PERSON CONSTRUCTING THE WELL DATE

Submit the original to the Division of Water Quality, Groundwater Section, 1636 Mail Service Center – Raleigh, NC 27699-1636 Phone No. (919) 733-3221, within 30 days.

GW-1 REV. 07/2001

WELL CONSTRUCTION RECORD

North Carolina – Department of Environmental and Natural Resources – Division of Water Quality – Groundwater Section

WELL CONTRACTOR (INDIVIDUAL) NAME (print) MIKE MCCONAHEY CERTIFICATION # 2402

WELL CONTRACTOR COMPANY NAME GEOLOGIC EXPLORATION, INC. PHONE # (704) 872-7686

STATE WELL CONSTRUCTION PERMIT# (if applicable) WM0500483 ASSOCIATED WQ PERMIT# (if applicable)

1. WELL USE (Check Applicable Box): Residential ☐ Municipal/Public ☐ Industrial ☐ Agricultural ☐
Monitoring ☒ Recovery ☐ Heat Pump Water Injection ☐ Other ☐ If Other, list Use

2. WELL LOCATION:
Nearest Town: DURHAM County DURHAM
S. BRIGGS AVENUE/NC 147 (DURHAM FREEWAY)
(Street Name, Numbers, Community, Subdivision, Lot No., Zip Code)

Topographic/Land setting
☐ Ridge ☐ Slope ☐ Valley ☒ Flat
(check appropriate box)
Latitude/longitude of well location
(degrees/minutes/seconds)
Latitude/longitude source: ☐ GPS ☐ Topographic map
(check box)

3. OWNER: BRUCE D. BIEHL/BRENNTAG SOUTHEAST, INC.
Address 2000 EAST PETTIGREW STREET
(Street or Route No.)
DURHAM NC 27330
City or Town State Zip Code
( )
Area Code – Phone Number

4. DATE DRILLED 06-04-02
5. TOTAL DEPTH: 25.0 FEET
6. DOES WELL REPLACE EXISTING WELL? YES ☐ NO ☒
7. STATIC WATER LEVEL Below Top of Casing: FT.
(Use "+" if Above Top of Casing)
8. TOP OF CASING IS 0.0 FT. Above Land Surface*
*Top of casing terminated at/or below land surface requires a variance in accordance with 15A NCAC 2C .0118.
9. YIELD (gpm): N/A METHOD OF TEST N/A
10. WATER ZONES (depth): N/A
11. DISINFECTION: Type N/A Amount

DRILLING LOG

DEPTH From	DEPTH To	Formation Description
0.0'	1.0'	Grass/Topsoil
1.0'	2.5'	White/Tan Silty Sand
2.5'	25.0'	Brown/Red Sandy Silt

12. CASING:

	Depth			Diameter	Wall Thickness or Weight/Ft.	Material
From	0.0'	To	10.0' Ft	2 INCH	SCH 40	PVC
From		To	Ft.			
From		To	Ft.			

13. Grout:

	Depth			Material	Method
From	0.0'	To	4.0' Ft.	Portland Bentonite	Slurry
From		To	Ft.		

14. SCREEN:

	Depth			Diameter	Slot Size	Material
From	10.0'	To	25.0' Ft.	2.0 in.	.010 in	PVC
From		To	Ft.	in.	in	

15. SAND/GRAVEL PACK:

	Depth			Size	Material
From	8.0'	To	25.0 Ft.	20-40	FINE SILICA SAND
From		To	Ft.		

LOCATION SKETCH
Show direction and distance in miles from at least two State Roads or County Roads, inculed the road numbers and common road names.

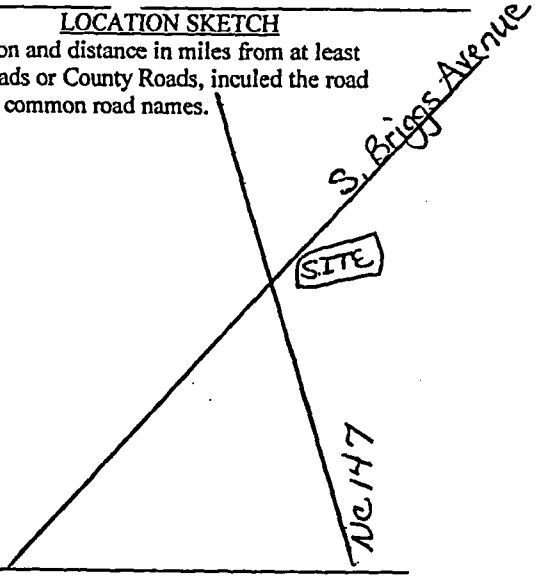

16. REMARKS: MW-9 BENTONITE SEAL FROM 4.0 TO 8.0 FEET

I DO HEARBY CERTIFY THAT THIS WELL WAS CONSTRUCTED IN ACCORDANCE WITH 15A NCAC 2C, WELL CONSTRUCTION STANDARDS, AND THAT A COPY OF THIS RECORD HAS BEEN PROVIDED TO THE WELL OWNER

Mike McConahey — SIGNATURE OF PERSON CONSTRUCTING THE WELL — 6/13/02 DATE

Submit the original to the Division of Water Quality, Groundwater Section, 1636 Mail Service Center – Raleigh, NC 27699-1636 Phone No. (919) 733-3221, within 30 days.

GW-1 REV. 07/2001

WELL CONSTRUCTION RECORD

North Carolina – Department of Environmental and Natural Resources – Division of Water Quality – Groundwater Section

WELL CONTRACTOR (INDIVIDUAL) NAME (print) MIKE MCCONAHEY CERTIFICATION # 2402

WELL CONTRACTOR COMPANY NAME GEOLOGIC EXPLORATION, INC. PHONE # (704) 872-7686

STATE WELL CONSTRUCTION PERMIT# (if applicable) WM0500483 ASSOCIATED WQ PERMIT# (if applicable)

1. WELL USE (Check Applicable Box): Residential ☐ Municipal/Public ☐ Industrial ☐ Agricultural ☐
Monitoring ☒ Recovery ☐ Heat Pump Water Injection ☐ Other ☐ If Other, list Use

2. WELL LOCATION:
Nearest Town: DURHAM County DURHAM
S. BRIGGS AVENUE/NC 147 (DURHAM FREEWAY)
(Street Name, Numbers, Community, Subdivision, Lot No., Zip Code)

Topographic/Land setting
☐ Ridge ☐ Slope ☐ Valley ☒ Flat
(check appropriate box)
Latitude/longitude of well location
(degrees/minutes/seconds)
Latitude/longitude source: ☐ GPS ☐ Topographic map
(check box)

3. OWNER: BRUCE D. BIEHL/BRENNTAG SOUTHEAST, INC.
Address 2000 EAST PETTGREW STREET
(Street or Route No.)
DURHAM NC 27330
City or Town State Zip Code
( )
Area Code – Phone Number

4. DATE DRILLED 06-04-02
5. TOTAL DEPTH: 24.5 FEET
6. DOES WELL REPLACE EXISTING WELL? YES ☐ NO ☒
7. STATIC WATER LEVEL Below Top of Casing: FT.
(Use "+" if Above Top of Casing)
8. TOP OF CASING IS 0.0 FT. Above Land Surface*
*Top of casing terminated at/or below land surface requires a variance in accordance with 15A NCAC 2C .0118.
9. YIELD (gpm): N/A METHOD OF TEST N/A
10. WATER ZONES (depth): N/A
11. DISINFECTION: Type N/A Amount
12. CASING:

	Depth			Diameter	Wall Thickness or Weight/Ft.	Material
From	0.0'	To	9.5' Ft	2 INCH	SCH 40	PVC
From		To	Ft.			
From		To	Ft.			

13. Grout:

	Depth			Material	Method
From	0.0'	To	3.5' Ft.	Portland Bentonite	Slurry
From		To	Ft.		

14. SCREEN:

	Depth			Diameter		Slot Size		Material
From	9.5'	To	24.5' Ft.	2.0	in.	.010	in	PVC
From		To	Ft.		in.		in	

15. SAND/GRAVEL PACK:

	Depth			Size	Material
From	7.5'	To	24.5' Ft.	20-40	FINE SILICA SAND
From		To	Ft.		

16. REMARKS: MW-10 BENTONITE SEAL FROM 3.5 TO 7.5 FEET

DEPTH From	DEPTH To	DRILLING LOG Formation Description
0.0'	1.0'	Grass/Topsoil
1.0'	24.5'	Brown/Red Sandy Silt

LOCATION SKETCH
Show direction and distance in miles from at least two State Roads or County Roads, inculed the road numbers and common road names.

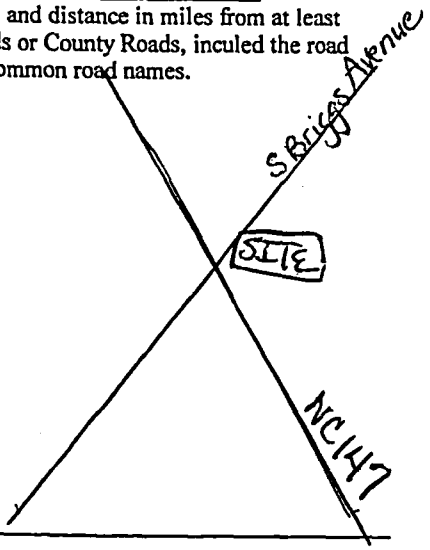

I DO HEARBY CERTIFY THAT THIS WELL WAS CONSTRUCTED IN ACCORDANCE WITH 15A NCAC 2C, WELL CONSTRUCTION STANDARDS, AND THAT A COPY OF THIS RECORD HAS BEEN PROVIDED TO THE WELL OWNER

Mike McConahey
SIGNATURE OF PERSON CONSTRUCTING THE WELL

6/13/02
DATE

Submit the original to the Division of Water Quality, Groundwater Section, 1636 Mail Service Center – Raleigh, NC 27699-1636 Phone No. (919) 733-3221, within 30 days.

GW-1 REV. 07/2001

WELL CONSTRUCTION RECORD

North Carolina – Department of Environmental and Natural Resources – Division of Water Quality – Groundwater Section

WELL CONTRACTOR (INDIVIDUAL) NAME (print) MIKE MCCONAHEY CERTIFICATION # 2402

WELL CONTRACTOR COMPANY NAME GEOLOGIC EXPLORATION, INC. PHONE # (704) 872-7686

STATE WELL CONSTRUCTION PERMIT# (if applicable) WM0500483 ASSOCIATED WQ PERMIT# (if applicable)

1. WELL USE (Check Applicable Box): Residential ☐ Municipal/Public ☐ Industrial ☐ Agricultural ☐
Monitoring ☒ Recovery ☐ Heat Pump Water Injection ☐ Other ☐ If Other, list Use

2. WELL LOCATION:
Nearest Town: DURHAM County DURHAM
S. BRIGGS AVENUE/NC 147 (DURHAM FREEWAY)
(Street Name, Numbers, Community, Subdivision, Lot No., Zip Code)

Topographic/Land setting
☐ Ridge ☐ Slope ☐ Valley ☒ Flat
(check appropriate box)
Latitude/longitude of well location
(degrees/minutes/seconds)
Latitude/longitude source: ☐ GPS ☐ Topographic map
(check box)

3. OWNER: BRUCE D. BIEHL/BRENNTAG SOUTHEAST, INC.
Address 2000 EAST PETTGREW STREET
(Street or Route No.)
DURHAM NC 27330
City or Town State Zip Code
( )
Area Code – Phone Number

4. DATE DRILLED 06-04-02
5. TOTAL DEPTH: 28.0 FEET
6. DOES WELL REPLACE EXISTING WELL? YES ☐ NO ☒
7. STATIC WATER LEVEL Below Top of Casing: FT.
(Use "+" if Above Top of Casing)
8. TOP OF CASING IS 0.0 FT. Above Land Surface*
*Top of casing terminated at/or below land surface requires a variance in accordance with 15A NCAC 2C .0118.
9. YIELD (gpm): N/A METHOD OF TEST N/A
10. WATER ZONES (depth): N/A
11. DISINFECTION: Type N/A Amount

DRILLING LOG

DEPTH From	DEPTH To	Formation Description
0.0'	1.0'	Tan/White Silty Sand
1.0'	10.0'	Brown/Red Sandy Silt
10.0'	12.0'	Silt Stone
12.0'	28.0'	Brown/Red Silt Stone

12. CASING:

	Depth			Diameter	Wall Thickness or Weight/Ft.	Material
From 0.0'	To 8.0'	Ft		2 INCH	SCH 40	PVC
From	To	Ft.				
From	To	Ft.				

13. Grout:

	Depth			Material	Method
From 0.0'	To 4.0'	Ft.		Portland Bentonite	Slurry
From	To	Ft.			

14. SCREEN:

	Depth			Diameter		Slot Size		Material
From 8.0'	To 28.0'	Ft.		2.0	in.	.010	in	PVC
From	To	Ft.			in.		in	

15. SAND/GRAVEL PACK:

	Depth			Size	Material
From 6.0'	To 28.0'	Ft.		20-40	FINE SILICA SAND
From	To	Ft.			

LOCATION SKETCH
Show direction and distance in miles from at least two State Roads or County Roads, inculed the road numbers and common road names.

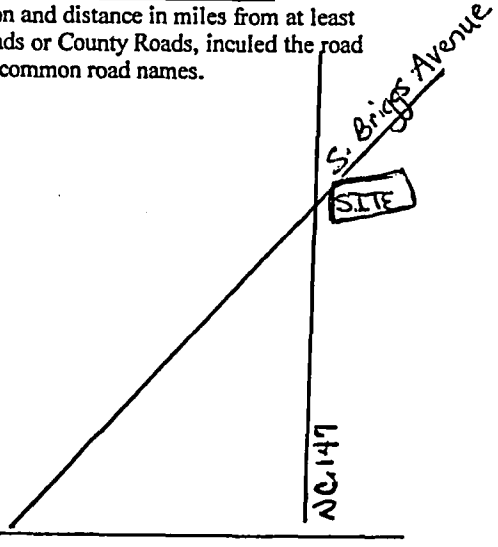

16. REMARKS: MW-11 BENTONITE SEAL FROM 4.0 TO 6.0 FEET

I DO HEARBY CERTIFY THAT THIS WELL WAS CONSTRUCTED IN ACCORDANCE WITH 15A NCAC 2C, WELL CONSTRUCTION STANDARDS, AND THAT A COPY OF THIS RECORD HAS BEEN PROVIDED TO THE WELL OWNER

Mike McConahey 6/13/02

SIGNATURE OF PERSON CONSTRUCTING THE WELL DATE

Submit the original to the Division of Water Quality, Groundwater Section, 1636 Mail Service Center – Raleigh, NC 27699-1636 Phone No. (919) 733-3221, within 30 days.

GW-1 REV. 07/2001

APPENDIX C

ARCADIS

Appendix C

Soil Analytical Reports

Pace Analytical™
www.pacelabs.com

Pace Analytical Services, Inc.
9800 Kincey Avenue, Suite 100
Huntersville, NC 28078
Phone: 704.875.9092
Fax: 704.875.9091

RECEIVED
MAY - 6 2002
ARCADIS Geraghty & Miller

May 03, 2002

Mr. Jim Shilliday
ARCADIS Geraghty & Miller
2301 Rexwoods Dr.
Suite 200
Raleigh, NC 27607

RE: Lab Project Number: 9232215
Client Project ID: NC101047.0002/Worth

Dear Mr. Shilliday:

Enclosed are the analytical results for sample(s) received by the laboratory on April 20, 2002. Results reported herein conform to the most current NELAC standards, where applicable, unless otherwise narrated in the body of the report.

If you have any questions concerning this report please feel free to contact me.

Sincerely,

Sherri Howard
Sherri.Howard@pacelabs.com
Project Manager

Enclosures

Pace Analytical™
www.pacelabs.com

Pace Analytical Services, Inc.
9800 Kincey Avenue, Suite 100
Huntersville, NC 28078
Phone: 704.875.9092
Fax: 704.875.9091

ARCADIS Geraghty & Miller
2301 Rexwoods Dr.
Suite 200
Raleigh, NC 27607

Lab Project Number: 9232215
Client Project ID: NC101047.0002/Worth

Attn: Mr. Jim Shilliday
Phone: (919)782-5511

Solid results are reported on a dry weight basis

Lab Sample No: 922218607 Project Sample Number: 9232215-001 Date Collected: 04/18/02 13:20
Client Sample ID: GP-24(6-7.5') Matrix: Soil Date Received: 04/20/02 09:45

Parameters	Results	Units	Report Limit	Dilution	Analyzed	by	CAS No.	Ftnote	Reg Limit
Wet Chemistry									
Percent Moisture	Method: % Moisture								
Percent Moisture	16.8	%		0.8	04/22/02	BYH			
GC/MS Volatiles									
GC/MS VOCs by 8260, low level	Prep/Method: EPA 8260 / EPA 8260								
Acetone	ND	ug/kg	120	1.0	04/24/02 07:06	BCK	67-64-1		
Benzene	ND	ug/kg	6.0	1.0	04/24/02 07:06	BCK	71-43-2		
Bromobenzene	ND	ug/kg	6.0	1.0	04/24/02 07:06	BCK	108-86-1		
Bromochloromethane	ND	ug/kg	6.0	1.0	04/24/02 07:06	BCK	74-97-5		
Bromodichloromethane	ND	ug/kg	6.0	1.0	04/24/02 07:06	BCK	75-27-4		
Bromoform	ND	ug/kg	6.0	1.0	04/24/02 07:06	BCK	75-25-2		
Bromomethane	ND	ug/kg	12.	1.0	04/24/02 07:06	BCK	74-83-9		
2-Butanone (MEK)	ND	ug/kg	120	1.0	04/24/02 07:06	BCK	78-93-3		
n-Butylbenzene	ND	ug/kg	6.0	1.0	04/24/02 07:06	BCK	104-51-8		
sec-Butylbenzene	ND	ug/kg	6.0	1.0	04/24/02 07:06	BCK	135-98-8		
tert-Butylbenzene	ND	ug/kg	6.0	1.0	04/24/02 07:06	BCK	98-06-6		
Carbon disulfide	ND	ug/kg	6.0	1.0	04/24/02 07:06	BCK	75-15-0		
Carbon tetrachloride	ND	ug/kg	6.0	1.0	04/24/02 07:06	BCK	56-23-5		
Chlorobenzene	ND	ug/kg	6.0	1.0	04/24/02 07:06	BCK	108-90-7		
Chloroethane	ND	ug/kg	12.	1.0	04/24/02 07:06	BCK	75-00-3		
Chloroform	ND	ug/kg	6.0	1.0	04/24/02 07:06	BCK	67-66-3		
Chloromethane	ND	ug/kg	12.	1.0	04/24/02 07:06	BCK	74-87-3		
2-Chlorotoluene	ND	ug/kg	6.0	1.0	04/24/02 07:06	BCK	95-49-8		
4-Chlorotoluene	ND	ug/kg	6.0	1.0	04/24/02 07:06	BCK	106-43-4		
1,2-Dibromo-3-chloropropane	ND	ug/kg	6.0	1.0	04/24/02 07:06	BCK	96-12-8		
Dibromochloromethane	ND	ug/kg	6.0	1.0	04/24/02 07:06	BCK	124-48-1		
1,2-Dibromoethane (EDB)	ND	ug/kg	6.0	1.0	04/24/02 07:06	BCK	106-93-4		
Dibromomethane	ND	ug/kg	6.0	1.0	04/24/02 07:06	BCK	74-95-3		
1,2-Dichlorobenzene	ND	ug/kg	6.0	1.0	04/24/02 07:06	BCK	95-50-1		

Laboratory Certification IDs
NC Wastewater 12
NC Drinking Water 37706
SC 99006

REPORT OF LABORATORY ANALYSIS
This report shall not be reproduced, except in full,
without the written consent of Pace Analytical Services, Inc.

Laboratory Certification IDs
LA Wastewater 04034
VA Drinking Water 213
FL NELAP E87627

Pace Analytical™
www.pacelabs.com

Pace Analytical Services, Inc.
9800 Kincey Avenue, Suite 100
Huntersville, NC 28078
Phone: 704.875.9092
Fax: 704.875.9091

Lab Project Number: 9232215
Client Project ID: NC101047.0002/Worth

Lab Sample No: 922218607 Project Sample Number: 9232215-001 Date Collected: 04/18/02 13:20
Client Sample ID: GP-24(6-7.5') Matrix: Soil Date Received: 04/20/02 09:45

Parameters	Results	Units	Report Limit	Dilution	Analyzed	by	CAS No.	Ftnote	Reg Limit
1,3-Dichlorobenzene	ND	ug/kg	6.0	1.0	04/24/02 07:06	BCK	541-73-1		
1,4-Dichlorobenzene	ND	ug/kg	6.0	1.0	04/24/02 07:06	BCK	106-46-7		
Dichlorodifluoromethane	ND	ug/kg	12.	1.0	04/24/02 07:06	BCK	75-71-8		
1,1-Dichloroethane	ND	ug/kg	6.0	1.0	04/24/02 07:06	BCK	75-34-3		
1,2-Dichloroethane	ND	ug/kg	6.0	1.0	04/24/02 07:06	BCK	107-06-2		
1,1-Dichloroethene	ND	ug/kg	6.0	1.0	04/24/02 07:06	BCK	75-35-4		
cis-1,2-Dichloroethene	260	ug/kg	6.0	1.0	04/24/02 07:06	BCK	156-59-2	1	
trans-1,2-Dichloroethene	ND	ug/kg	6.0	1.0	04/24/02 07:06	BCK	156-60-5		
1,2-Dichloropropane	28.	ug/kg	6.0	1.0	04/24/02 07:06	BCK	78-87-5		
1,3-Dichloropropane	ND	ug/kg	6.0	1.0	04/24/02 07:06	BCK	142-28-9		
2,2-Dichloropropane	ND	ug/kg	6.0	1.0	04/24/02 07:06	BCK	594-20-7		
1,1-Dichloropropene	ND	ug/kg	6.0	1.0	04/24/02 07:06	BCK	563-58-6		
Diisopropyl ether	ND	ug/kg	6.0	1.0	04/24/02 07:06	BCK	108-20-3		
Ethylbenzene	ND	ug/kg	6.0	1.0	04/24/02 07:06	BCK	100-41-4		
Hexachloro-1,3-butadiene	ND	ug/kg	6.0	1.0	04/24/02 07:06	BCK	87-68-3		
Isopropylbenzene (Cumene)	ND	ug/kg	6.0	1.0	04/24/02 07:06	BCK	98-82-8		
p-Isopropyltoluene	ND	ug/kg	6.0	1.0	04/24/02 07:06	BCK	99-87-6		
Methylene chloride	ND	ug/kg	6.0	1.0	04/24/02 07:06	BCK	75-09-2		
4-Methyl-2-pentanone (MIBK)	ND	ug/kg	60.	1.0	04/24/02 07:06	BCK	108-10-1		
Methyl-tert-butyl ether	ND	ug/kg	6.0	1.0	04/24/02 07:06	BCK	1634-04-4		
Naphthalene	ND	ug/kg	6.0	1.0	04/24/02 07:06	BCK	91-20-3		
n-Propylbenzene	ND	ug/kg	6.0	1.0	04/24/02 07:06	BCK	103-65-1		
Styrene	ND	ug/kg	6.0	1.0	04/24/02 07:06	BCK	100-42-5		
1,1,1,2-Tetrachloroethane	ND	ug/kg	6.0	1.0	04/24/02 07:06	BCK	630-20-6		
1,1,2,2-Tetrachloroethane	ND	ug/kg	6.0	1.0	04/24/02 07:06	BCK	79-34-5		
Tetrachloroethene	11.	ug/kg	6.0	1.0	04/24/02 07:06	BCK	127-18-4		
Tetrahydrofuran	ND	ug/kg	60.	1.0	04/24/02 07:06	BCK	109-99-9		
Toluene	ND	ug/kg	6.0	1.0	04/24/02 07:06	BCK	108-88-3		
1,2,3-Trichlorobenzene	ND	ug/kg	6.0	1.0	04/24/02 07:06	BCK	87-61-6		
1,2,4-Trichlorobenzene	ND	ug/kg	6.0	1.0	04/24/02 07:06	BCK	120-82-1		
1,1,1-Trichloroethane	ND	ug/kg	6.0	1.0	04/24/02 07:06	BCK	71-55-6		
1,1,2-Trichloroethane	ND	ug/kg	6.0	1.0	04/24/02 07:06	BCK	79-00-5		
Trichloroethene	3000	ug/kg	6.0	1.0	04/24/02 07:06	BCK	79-01-6	1	
Trichlorofluoromethane	ND	ug/kg	6.0	1.0	04/24/02 07:06	BCK	75-69-4		
1,2,3-Trichloropropane	ND	ug/kg	6.0	1.0	04/24/02 07:06	BCK	96-18-4		
1,2,4-Trimethylbenzene	ND	ug/kg	6.0	1.0	04/24/02 07:06	BCK	95-63-6		
1,3,5-Trimethylbenzene	ND	ug/kg	6.0	1.0	04/24/02 07:06	BCK	108-67-8		
Vinyl chloride	ND	ug/kg	12.	1.0	04/24/02 07:06	BCK	75-01-4		

Laboratory Certification IDs
NC Wastewater 12
NC Drinking Water 37706
SC 99006

REPORT OF LABORATORY ANALYSIS
This report shall not be reproduced, except in full,
without the written consent of Pace Analytical Services, Inc.

Laboratory Certification IDs
LA Wastewater 04034
VA Drinking Water 213
FL NELAP E87627

Pace Analytical™
www.pacelabs.com

Pace Analytical Services, Inc.
9800 Kincey Avenue, Suite 100
Huntersville, NC 28078
Phone: 704.875.9092
Fax: 704.875.9091

Lab Project Number: 9232215
Client Project ID: NC101047.0002/Worth

Lab Sample No: 922218607 Project Sample Number: 9232215-001 Date Collected: 04/18/02 13:20
Client Sample ID: GP-24(6-7.5') Matrix: Soil Date Received: 04/20/02 09:45

Parameters	Results	Units	Report Limit	Dilution	Analyzed	by	CAS No.	Ftnote	Reg Limit
m&p-Xylene	ND	ug/kg	12.	1.0	04/24/02 07:06	BCK			
o-Xylene	ND	ug/kg	6.0	1.0	04/24/02 07:06	BCK	95-47-6		
Toluene-d8 (S)	99	%		1.0	04/24/02 07:06	BCK	2037-26-5		
4-Bromofluorobenzene (S)	92	%		1.0	04/24/02 07:06	BCK	460-00-4		
Dibromofluoromethane (S)	102	%		1.0	04/24/02 07:06	BCK			
1,2-Dichloroethane-d4 (S)	106	%		1.0	04/24/02 07:06	BCK	17060-07-0		

Laboratory Certification IDs
NC Wastewater 12
NC Drinking Water 37706
SC 99006

REPORT OF LABORATORY ANALYSIS
This report shall not be reproduced, except in full,
without the written consent of Pace Analytical Services, Inc.

Laboratory Certification IDs
LA Wastewater 04034
VA Drinking Water 213
FL NELAP E87627

Pace Analytical™
www.pacelabs.com

Pace Analytical Services, Inc.
9800 Kincey Avenue, Suite 100
Huntersville, NC 28078
Phone: 704.875.9092
Fax: 704.875.9091

Lab Project Number: 9232215
Client Project ID: NC101047.0002/Worth

Lab Sample No: 922218615 Project Sample Number: 9232215-002 Date Collected: 04/18/02 13:50
Client Sample ID: GP-25(4-5.5') Matrix: Soil Date Received: 04/20/02 09:45

Parameters	Results	Units	Report Limit	Dilution	Analyzed	by	CAS No.	Ftnote	Reg Limit
Wet Chemistry									
Percent Moisture	Method: % Moisture								
Percent Moisture	13.7	%		0.9	04/22/02	BYH			
GC/MS Volatiles									
GC/MS VOCs by 8260, low level	Prep/Method: EPA 8260 / EPA 8260								
Acetone	ND	ug/kg	120	1.0	04/25/02 03:34	BCK	67-64-1		
Benzene	ND	ug/kg	5.8	1.0	04/25/02 03:34	BCK	71-43-2		
Bromobenzene	ND	ug/kg	5.8	1.0	04/25/02 03:34	BCK	108-86-1		
Bromochloromethane	ND	ug/kg	5.8	1.0	04/25/02 03:34	BCK	74-97-5		
Bromodichloromethane	ND	ug/kg	5.8	1.0	04/25/02 03:34	BCK	75-27-4		
Bromoform	ND	ug/kg	5.8	1.0	04/25/02 03:34	BCK	75-25-2		
Bromomethane	ND	ug/kg	12.	1.0	04/25/02 03:34	BCK	74-83-9		
2-Butanone (MEK)	ND	ug/kg	120	1.0	04/25/02 03:34	BCK	78-93-3		
n-Butylbenzene	ND	ug/kg	5.8	1.0	04/25/02 03:34	BCK	104-51-8		
sec-Butylbenzene	ND	ug/kg	5.8	1.0	04/25/02 03:34	BCK	135-98-8		
tert-Butylbenzene	ND	ug/kg	5.8	1.0	04/25/02 03:34	BCK	98-06-6		
Carbon disulfide	ND	ug/kg	5.8	1.0	04/25/02 03:34	BCK	75-15-0		
Carbon tetrachloride	ND	ug/kg	5.8	1.0	04/25/02 03:34	BCK	56-23-5		
Chlorobenzene	ND	ug/kg	5.8	1.0	04/25/02 03:34	BCK	108-90-7		
Chloroethane	ND	ug/kg	12.	1.0	04/25/02 03:34	BCK	75-00-3		
Chloroform	ND	ug/kg	5.8	1.0	04/25/02 03:34	BCK	67-66-3		
Chloromethane	ND	ug/kg	12.	1.0	04/25/02 03:34	BCK	74-87-3		
2-Chlorotoluene	ND	ug/kg	5.8	1.0	04/25/02 03:34	BCK	95-49-8		
4-Chlorotoluene	ND	ug/kg	5.8	1.0	04/25/02 03:34	BCK	106-43-4		
1,2-Dibromo-3-chloropropane	ND	ug/kg	5.8	1.0	04/25/02 03:34	BCK	96-12-8		
Dibromochloromethane	ND	ug/kg	5.8	1.0	04/25/02 03:34	BCK	124-48-1		
1,2-Dibromoethane (EDB)	ND	ug/kg	5.8	1.0	04/25/02 03:34	BCK	106-93-4		
Dibromomethane	ND	ug/kg	5.8	1.0	04/25/02 03:34	BCK	74-95-3		
1,2-Dichlorobenzene	ND	ug/kg	5.8	1.0	04/25/02 03:34	BCK	95-50-1		
1,3-Dichlorobenzene	ND	ug/kg	5.8	1.0	04/25/02 03:34	BCK	541-73-1		
1,4-Dichlorobenzene	ND	ug/kg	5.8	1.0	04/25/02 03:34	BCK	106-46-7		
Dichlorodifluoromethane	ND	ug/kg	12.	1.0	04/25/02 03:34	BCK	75-71-8		
1,1-Dichloroethane	ND	ug/kg	5.8	1.0	04/25/02 03:34	BCK	75-34-3		
1,2-Dichloroethane	ND	ug/kg	5.8	1.0	04/25/02 03:34	BCK	107-06-2		
1,1-Dichloroethene	ND	ug/kg	5.8	1.0	04/25/02 03:34	BCK	75-35-4		
cis-1,2-Dichloroethene	ND	ug/kg	5.8	1.0	04/25/02 03:34	BCK	156-59-2		
trans-1,2-Dichloroethene	ND	ug/kg	5.8	1.0	04/25/02 03:34	BCK	156-60-5		

Laboratory Certification IDs
NC Wastewater 12
NC Drinking Water 37706
SC 99006

REPORT OF LABORATORY ANALYSIS
This report shall not be reproduced, except in full,
without the written consent of Pace Analytical Services, Inc.

Laboratory Certification IDs
LA Wastewater 04034
VA Drinking Water 213
FL NELAP E87627

Pace Analytical™
www.pacelabs.com

Pace Analytical Services, Inc.
9800 Kincey Avenue, Suite 100
Huntersville, NC 28078
Phone: 704.875.9092
Fax: 704.875.9091

Lab Project Number: 9232215
Client Project ID: NC101047.0002/Worth

Lab Sample No: 922218615 Project Sample Number: 9232215-002 Date Collected: 04/18/02 13:50
Client Sample ID: GP-25(4-5.5') Matrix: Soil Date Received: 04/20/02 09:45

Parameters	Results	Units	Report Limit	Dilution	Analyzed	by	CAS No.	Ftnote	Reg Limit
1,2-Dichloropropane	ND	ug/kg	5.8	1.0	04/25/02 03:34	BCK	78-87-5		
1,3-Dichloropropane	ND	ug/kg	5.8	1.0	04/25/02 03:34	BCK	142-28-9		
2,2-Dichloropropane	ND	ug/kg	5.8	1.0	04/25/02 03:34	BCK	594-20-7		
1,1-Dichloropropene	ND	ug/kg	5.8	1.0	04/25/02 03:34	BCK	563-58-6		
Diisopropyl ether	ND	ug/kg	5.8	1.0	04/25/02 03:34	BCK	108-20-3		
Ethylbenzene	ND	ug/kg	5.8	1.0	04/25/02 03:34	BCK	100-41-4		
Hexachloro-1,3-butadiene	ND	ug/kg	5.8	1.0	04/25/02 03:34	BCK	87-68-3		
Isopropylbenzene (Cumene)	ND	ug/kg	5.8	1.0	04/25/02 03:34	BCK	98-82-8		
p-Isopropyltoluene	ND	ug/kg	5.8	1.0	04/25/02 03:34	BCK	99-87-6		
Methylene chloride	ND	ug/kg	5.8	1.0	04/25/02 03:34	BCK	75-09-2		
4-Methyl-2-pentanone (MIBK)	ND	ug/kg	58.	1.0	04/25/02 03:34	BCK	108-10-1		
Methyl-tert-butyl ether	ND	ug/kg	5.8	1.0	04/25/02 03:34	BCK	1634-04-4		
Naphthalene	ND	ug/kg	5.8	1.0	04/25/02 03:34	BCK	91-20-3		
n-Propylbenzene	ND	ug/kg	5.8	1.0	04/25/02 03:34	BCK	103-65-1		
Styrene	ND	ug/kg	5.8	1.0	04/25/02 03:34	BCK	100-42-5		
1,1,1,2-Tetrachloroethane	ND	ug/kg	5.8	1.0	04/25/02 03:34	BCK	630-20-6		
1,1,2,2-Tetrachloroethane	ND	ug/kg	5.8	1.0	04/25/02 03:34	BCK	79-34-5		
Tetrachloroethene	ND	ug/kg	5.8	1.0	04/25/02 03:34	BCK	127-18-4		
Tetrahydrofuran	ND	ug/kg	58.	1.0	04/25/02 03:34	BCK	109-99-9		
Toluene	ND	ug/kg	5.8	1.0	04/25/02 03:34	BCK	108-88-3		
1,2,3-Trichlorobenzene	ND	ug/kg	5.8	1.0	04/25/02 03:34	BCK	87-61-6		
1,2,4-Trichlorobenzene	ND	ug/kg	5.8	1.0	04/25/02 03:34	BCK	120-82-1		
1,1,1-Trichloroethane	ND	ug/kg	5.8	1.0	04/25/02 03:34	BCK	71-55-6		
1,1,2-Trichloroethane	ND	ug/kg	5.8	1.0	04/25/02 03:34	BCK	79-00-5		
Trichloroethene	13.	ug/kg	5.8	1.0	04/25/02 03:34	BCK	79-01-6		
Trichlorofluoromethane	ND	ug/kg	5.8	1.0	04/25/02 03:34	BCK	75-69-4		
1,2,3-Trichloropropane	ND	ug/kg	5.8	1.0	04/25/02 03:34	BCK	96-18-4		
1,2,4-Trimethylbenzene	ND	ug/kg	5.8	1.0	04/25/02 03:34	BCK	95-63-6		
1,3,5-Trimethylbenzene	ND	ug/kg	5.8	1.0	04/25/02 03:34	BCK	108-67-8		
Vinyl chloride	ND	ug/kg	12.	1.0	04/25/02 03:34	BCK	75-01-4		
m&p-Xylene	ND	ug/kg	12.	1.0	04/25/02 03:34	BCK			
o-Xylene	ND	ug/kg	5.8	1.0	04/25/02 03:34	BCK	95-47-6		
Toluene-d8 (S)	99	%		1.0	04/25/02 03:34	BCK	2037-26-5		
4-Bromofluorobenzene (S)	95	%		1.0	04/25/02 03:34	BCK	460-00-4		
Dibromofluoromethane (S)	92	%		1.0	04/25/02 03:34	BCK			
1,2-Dichloroethane-d4 (S)	89	%		1.0	04/25/02 03:34	BCK	17060-07-0		

Laboratory Certification IDs
NC Wastewater 12
NC Drinking Water 37706
SC 99006

REPORT OF LABORATORY ANALYSIS
This report shall not be reproduced, except in full,
without the written consent of Pace Analytical Services, Inc.

Laboratory Certification IDs
LA Wastewater 04034
VA Drinking Water 213
FL NELAP E87627

Pace Analytical™
www.pacelabs.com

Pace Analytical Services, Inc.
9800 Kincey Avenue, Suite 100
Huntersville, NC 28078
Phone: 704.875.9092
Fax: 704.875.9091

Lab Project Number: 9232215
Client Project ID: NC101047.0002/Worth

Lab Sample No: 922218623 Project Sample Number: 9232215-003 Date Collected: 04/18/02 14:50
Client Sample ID: GP-26(4-5.5') Matrix: Soil Date Received: 04/20/02 09:45

Parameters	Results	Units	Report Limit	Dilution	Analyzed	by	CAS No.	Ftnote	Reg Limit
Wet Chemistry									
Percent Moisture	Method: % Moisture								
Percent Moisture	20.9	%		0.8	04/22/02	BYH			
GC/MS Volatiles									
GC/MS VOCs by 8260, low level	Prep/Method: EPA 8260 / EPA 8260								
Acetone	780	ug/kg	130	1.0	04/25/02 04:04	BCK	67-64-1	1	
Benzene	ND	ug/kg	6.3	1.0	04/25/02 04:04	BCK	71-43-2		
Bromobenzene	ND	ug/kg	6.3	1.0	04/25/02 04:04	BCK	108-86-1		
Bromochloromethane	ND	ug/kg	6.3	1.0	04/25/02 04:04	BCK	74-97-5		
Bromodichloromethane	ND	ug/kg	6.3	1.0	04/25/02 04:04	BCK	75-27-4		
Bromoform	ND	ug/kg	6.3	1.0	04/25/02 04:04	BCK	75-25-2		
Bromomethane	ND	ug/kg	13.	1.0	04/25/02 04:04	BCK	74-83-9		
2-Butanone (MEK)	ND	ug/kg	130	1.0	04/25/02 04:04	BCK	78-93-3		
n-Butylbenzene	ND	ug/kg	6.3	1.0	04/25/02 04:04	BCK	104-51-8		
sec-Butylbenzene	ND	ug/kg	6.3	1.0	04/25/02 04:04	BCK	135-98-8		
tert-Butylbenzene	ND	ug/kg	6.3	1.0	04/25/02 04:04	BCK	98-06-6		
Carbon disulfide	ND	ug/kg	6.3	1.0	04/25/02 04:04	BCK	75-15-0		
Carbon tetrachloride	ND	ug/kg	6.3	1.0	04/25/02 04:04	BCK	56-23-5		
Chlorobenzene	ND	ug/kg	6.3	1.0	04/25/02 04:04	BCK	108-90-7		
Chloroethane	ND	ug/kg	13.	1.0	04/25/02 04:04	BCK	75-00-3		
Chloroform	ND	ug/kg	6.3	1.0	04/25/02 04:04	BCK	67-66-3		
Chloromethane	ND	ug/kg	13.	1.0	04/25/02 04:04	BCK	74-87-3		
2-Chlorotoluene	ND	ug/kg	6.3	1.0	04/25/02 04:04	BCK	95-49-8		
4-Chlorotoluene	ND	ug/kg	6.3	1.0	04/25/02 04:04	BCK	106-43-4		
1,2-Dibromo-3-chloropropane	ND	ug/kg	6.3	1.0	04/25/02 04:04	BCK	96-12-8		
Dibromochloromethane	ND	ug/kg	6.3	1.0	04/25/02 04:04	BCK	124-48-1		
1,2-Dibromoethane (EDB)	ND	ug/kg	6.3	1.0	04/25/02 04:04	BCK	106-93-4		
Dibromomethane	ND	ug/kg	6.3	1.0	04/25/02 04:04	BCK	74-95-3		
1,2-Dichlorobenzene	ND	ug/kg	6.3	1.0	04/25/02 04:04	BCK	95-50-1		
1,3-Dichlorobenzene	ND	ug/kg	6.3	1.0	04/25/02 04:04	BCK	541-73-1		
1,4-Dichlorobenzene	ND	ug/kg	6.3	1.0	04/25/02 04:04	BCK	106-46-7		
Dichlorodifluoromethane	ND	ug/kg	13.	1.0	04/25/02 04:04	BCK	75-71-8		
1,1-Dichloroethane	ND	ug/kg	6.3	1.0	04/25/02 04:04	BCK	75-34-3		
1,2-Dichloroethane	ND	ug/kg	6.3	1.0	04/25/02 04:04	BCK	107-06-2		
1,1-Dichloroethene	ND	ug/kg	6.3	1.0	04/25/02 04:04	BCK	75-35-4		
cis-1,2-Dichloroethene	85.	ug/kg	6.3	1.0	04/25/02 04:04	BCK	156-59-2		
trans-1,2-Dichloroethene	ND	ug/kg	6.3	1.0	04/25/02 04:04	BCK	156-60-5		

Laboratory Certification IDs
NC Wastewater 12
NC Drinking Water 37706
SC 99006

REPORT OF LABORATORY ANALYSIS
This report shall not be reproduced, except in full,
without the written consent of Pace Analytical Services, Inc.

Laboratory Certification IDs
LA Wastewater 04034
VA Drinking Water 213
FL NELAP E87627

Pace Analytical™
www.pacelabs.com

Pace Analytical Services, Inc.
9800 Kincey Avenue, Suite 100
Huntersville, NC 28078
Phone: 704.875.9092
Fax: 704.875.9091

Lab Project Number: 9232215
Client Project ID: NC101047.0002/Worth

Lab Sample No: 922218623 Project Sample Number: 9232215-003 Date Collected: 04/18/02 14:50
Client Sample ID: GP-26(4-5.5') Matrix: Soil Date Received: 04/20/02 09:45

Parameters	Results	Units	Report Limit	Dilution	Analyzed	by	CAS No.	Ftnote	Reg Limit
1,2-Dichloropropane	8.9	ug/kg	6.3	1.0	04/25/02 04:04	BCK	78-87-5		
1,3-Dichloropropane	ND	ug/kg	6.3	1.0	04/25/02 04:04	BCK	142-28-9		
2,2-Dichloropropane	ND	ug/kg	6.3	1.0	04/25/02 04:04	BCK	594-20-7		
1,1-Dichloropropene	ND	ug/kg	6.3	1.0	04/25/02 04:04	BCK	563-58-6		
Diisopropyl ether	ND	ug/kg	6.3	1.0	04/25/02 04:04	BCK	108-20-3		
Ethylbenzene	13.	ug/kg	6.3	1.0	04/25/02 04:04	BCK	100-41-4		
Hexachloro-1,3-butadiene	ND	ug/kg	6.3	1.0	04/25/02 04:04	BCK	87-68-3		
Isopropylbenzene (Cumene)	ND	ug/kg	6.3	1.0	04/25/02 04:04	BCK	98-82-8		
p-Isopropyltoluene	ND	ug/kg	6.3	1.0	04/25/02 04:04	BCK	99-87-6		
Methylene chloride	7.3	ug/kg	6.3	1.0	04/25/02 04:04	BCK	75-09-2		
4-Methyl-2-pentanone (MIBK)	160	ug/kg	63.	1.0	04/25/02 04:04	BCK	108-10-1		
Methyl-tert-butyl ether	ND	ug/kg	6.3	1.0	04/25/02 04:04	BCK	1634-04-4		
Naphthalene	ND	ug/kg	6.3	1.0	04/25/02 04:04	BCK	91-20-3		
n-Propylbenzene	ND	ug/kg	6.3	1.0	04/25/02 04:04	BCK	103-65-1		
Styrene	ND	ug/kg	6.3	1.0	04/25/02 04:04	BCK	100-42-5		
1,1,1,2-Tetrachloroethane	ND	ug/kg	6.3	1.0	04/25/02 04:04	BCK	630-20-6		
1,1,2,2-Tetrachloroethane	ND	ug/kg	6.3	1.0	04/25/02 04:04	BCK	79-34-5		
Tetrachloroethene	12.	ug/kg	6.3	1.0	04/25/02 04:04	BCK	127-18-4		
Tetrahydrofuran	ND	ug/kg	63.	1.0	04/25/02 04:04	BCK	109-99-9		
Toluene	45.	ug/kg	6.3	1.0	04/25/02 04:04	BCK	108-88-3		
1,2,3-Trichlorobenzene	ND	ug/kg	6.3	1.0	04/25/02 04:04	BCK	87-61-6		
1,2,4-Trichlorobenzene	ND	ug/kg	6.3	1.0	04/25/02 04:04	BCK	120-82-1		
1,1,1-Trichloroethane	ND	ug/kg	6.3	1.0	04/25/02 04:04	BCK	71-55-6		
1,1,2-Trichloroethane	ND	ug/kg	6.3	1.0	04/25/02 04:04	BCK	79-00-5		
Trichloroethene	230	ug/kg	6.3	1.0	04/25/02 04:04	BCK	79-01-6		
Trichlorofluoromethane	ND	ug/kg	6.3	1.0	04/25/02 04:04	BCK	75-69-4		
1,2,3-Trichloropropane	ND	ug/kg	6.3	1.0	04/25/02 04:04	BCK	96-18-4		
1,2,4-Trimethylbenzene	ND	ug/kg	6.3	1.0	04/25/02 04:04	BCK	95-63-6		
1,3,5-Trimethylbenzene	ND	ug/kg	6.3	1.0	04/25/02 04:04	BCK	108-67-8		
Vinyl chloride	ND	ug/kg	13.	1.0	04/25/02 04:04	BCK	75-01-4		
m&p-Xylene	71.	ug/kg	13.	1.0	04/25/02 04:04	BCK			
o-Xylene	39.	ug/kg	6.3	1.0	04/25/02 04:04	BCK	95-47-6		
Toluene-d8 (S)	100	%		1.0	04/25/02 04:04	BCK	2037-26-5		
4-Bromofluorobenzene (S)	98	%		1.0	04/25/02 04:04	BCK	460-00-4		
Dibromofluoromethane (S)	96	%		1.0	04/25/02 04:04	BCK			
1,2-Dichloroethane-d4 (S)	97	%		1.0	04/25/02 04:04	BCK	17060-07-0		

Laboratory Certification IDs
NC Wastewater 12
NC Drinking Water 37706
SC 99006

REPORT OF LABORATORY ANALYSIS
This report shall not be reproduced, except in full,
without the written consent of Pace Analytical Services, Inc.

Laboratory Certification IDs
LA Wastewater 04034
VA Drinking Water 213
FL NELAP E87627

Pace Analytical™
www.pacelabs.com

Pace Analytical Services, Inc.
9800 Kincey Avenue, Suite 100
Huntersville, NC 28078
Phone: 704.875.9092
Fax: 704.875.9091

Lab Project Number: 9232215
Client Project ID: NC101047.0002/Worth

Lab Sample No: 922218631 Project Sample Number: 9232215-004 Date Collected: 04/18/02 14:50
Client Sample ID: GP-26(5.5-7') Matrix: Soil Date Received: 04/20/02 09:45

Parameters	Results	Units	Report Limit	Dilution	Analyzed	by	CAS No.	Ftnote	Reg Limit
Wet Chemistry									
Percent Moisture	Method: % Moisture								
Percent Moisture	19.7	%		0.8	04/22/02	BYH			
GC/MS Volatiles									
GC/MS VOCs by 8260, low level	Prep/Method: EPA 8260 / EPA 8260								
Acetone	550	ug/kg	120	1.0	04/25/02 04:35	BCK	67-64-1	1	
Benzene	ND	ug/kg	6.2	1.0	04/25/02 04:35	BCK	71-43-2		
Bromobenzene	ND	ug/kg	6.2	1.0	04/25/02 04:35	BCK	108-86-1		
Bromochloromethane	ND	ug/kg	6.2	1.0	04/25/02 04:35	BCK	74-97-5		
Bromodichloromethane	ND	ug/kg	6.2	1.0	04/25/02 04:35	BCK	75-27-4		
Bromoform	ND	ug/kg	6.2	1.0	04/25/02 04:35	BCK	75-25-2		
Bromomethane	ND	ug/kg	12.	1.0	04/25/02 04:35	BCK	74-83-9		
2-Butanone (MEK)	ND	ug/kg	120	1.0	04/25/02 04:35	BCK	78-93-3		
n-Butylbenzene	ND	ug/kg	6.2	1.0	04/25/02 04:35	BCK	104-51-8		
sec-Butylbenzene	ND	ug/kg	6.2	1.0	04/25/02 04:35	BCK	135-98-8		
tert-Butylbenzene	ND	ug/kg	6.2	1.0	04/25/02 04:35	BCK	98-06-6		
Carbon disulfide	ND	ug/kg	6.2	1.0	04/25/02 04:35	BCK	75-15-0		
Carbon tetrachloride	ND	ug/kg	6.2	1.0	04/25/02 04:35	BCK	56-23-5		
Chlorobenzene	ND	ug/kg	6.2	1.0	04/25/02 04:35	BCK	108-90-7		
Chloroethane	ND	ug/kg	12.	1.0	04/25/02 04:35	BCK	75-00-3		
Chloroform	ND	ug/kg	6.2	1.0	04/25/02 04:35	BCK	67-66-3		
Chloromethane	ND	ug/kg	12.	1.0	04/25/02 04:35	BCK	74-87-3		
2-Chlorotoluene	ND	ug/kg	6.2	1.0	04/25/02 04:35	BCK	95-49-8		
4-Chlorotoluene	ND	ug/kg	6.2	1.0	04/25/02 04:35	BCK	106-43-4		
1,2-Dibromo-3-chloropropane	ND	ug/kg	6.2	1.0	04/25/02 04:35	BCK	96-12-8		
Dibromochloromethane	ND	ug/kg	6.2	1.0	04/25/02 04:35	BCK	124-48-1		
1,2-Dibromoethane (EDB)	ND	ug/kg	6.2	1.0	04/25/02 04:35	BCK	106-93-4		
Dibromomethane	ND	ug/kg	6.2	1.0	04/25/02 04:35	BCK	74-95-3		
1,2-Dichlorobenzene	ND	ug/kg	6.2	1.0	04/25/02 04:35	BCK	95-50-1		
1,3-Dichlorobenzene	ND	ug/kg	6.2	1.0	04/25/02 04:35	BCK	541-73-1		
1,4-Dichlorobenzene	ND	ug/kg	6.2	1.0	04/25/02 04:35	BCK	106-46-7		
Dichlorodifluoromethane	ND	ug/kg	12.	1.0	04/25/02 04:35	BCK	75-71-8		
1,1-Dichloroethane	ND	ug/kg	6.2	1.0	04/25/02 04:35	BCK	75-34-3		
1,2-Dichloroethane	ND	ug/kg	6.2	1.0	04/25/02 04:35	BCK	107-06-2		
1,1-Dichloroethene	ND	ug/kg	6.2	1.0	04/25/02 04:35	BCK	75-35-4		
cis-1,2-Dichloroethene	62.	ug/kg	6.2	1.0	04/25/02 04:35	BCK	156-59-2		
trans-1,2-Dichloroethene	ND	ug/kg	6.2	1.0	04/25/02 04:35	BCK	156-60-5		

Laboratory Certification IDs
NC Wastewater 12
NC Drinking Water 37706
SC 99006

REPORT OF LABORATORY ANALYSIS
This report shall not be reproduced, except in full,
without the written consent of Pace Analytical Services, Inc.

Laboratory Certification IDs
LA Wastewater 04034
VA Drinking Water 213
FL NELAP E87627

Pace Analytical™
www.pacelabs.com

Pace Analytical Services, Inc.
9800 Kincey Avenue, Suite 100
Huntersville, NC 28078
Phone: 704.875.9092
Fax: 704.875.9091

Lab Project Number: 9232215
Client Project ID: NC101047.0002/Worth

Lab Sample No: 922218631 Project Sample Number: 9232215-004 Date Collected: 04/18/02 14:50
Client Sample ID: GP-26(5.5-7') Matrix: Soil Date Received: 04/20/02 09:45

Parameters	Results	Units	Report Limit	Dilution	Analyzed	by	CAS No.	Ftnote	Reg Limit
1,2-Dichloropropane	6.6	ug/kg	6.2	1.0	04/25/02 04:35	BCK	78-87-5		
1,3-Dichloropropane	ND	ug/kg	6.2	1.0	04/25/02 04:35	BCK	142-28-9		
2,2-Dichloropropane	ND	ug/kg	6.2	1.0	04/25/02 04:35	BCK	594-20-7		
1,1-Dichloropropene	ND	ug/kg	6.2	1.0	04/25/02 04:35	BCK	563-58-6		
Diisopropyl ether	ND	ug/kg	6.2	1.0	04/25/02 04:35	BCK	108-20-3		
Ethylbenzene	7.9	ug/kg	6.2	1.0	04/25/02 04:35	BCK	100-41-4		
Hexachloro-1,3-butadiene	ND	ug/kg	6.2	1.0	04/25/02 04:35	BCK	87-68-3		
Isopropylbenzene (Cumene)	ND	ug/kg	6.2	1.0	04/25/02 04:35	BCK	98-82-8		
p-Isopropyltoluene	ND	ug/kg	6.2	1.0	04/25/02 04:35	BCK	99-87-6		
Methylene chloride	ND	ug/kg	6.2	1.0	04/25/02 04:35	BCK	75-09-2		
4-Methyl-2-pentanone (MIBK)	140	ug/kg	62.	1.0	04/25/02 04:35	BCK	108-10-1		
Methyl-tert-butyl ether	ND	ug/kg	6.2	1.0	04/25/02 04:35	BCK	1634-04-4		
Naphthalene	ND	ug/kg	6.2	1.0	04/25/02 04:35	BCK	91-20-3		
n-Propylbenzene	ND	ug/kg	6.2	1.0	04/25/02 04:35	BCK	103-65-1		
Styrene	ND	ug/kg	6.2	1.0	04/25/02 04:35	BCK	100-42-5		
1,1,1,2-Tetrachloroethane	ND	ug/kg	6.2	1.0	04/25/02 04:35	BCK	630-20-6		
1,1,2,2-Tetrachloroethane	ND	ug/kg	6.2	1.0	04/25/02 04:35	BCK	79-34-5		
Tetrachloroethene	ND	ug/kg	6.2	1.0	04/25/02 04:35	BCK	127-18-4		
Tetrahydrofuran	ND	ug/kg	62.	1.0	04/25/02 04:35	BCK	109-99-9		
Toluene	36.	ug/kg	6.2	1.0	04/25/02 04:35	BCK	108-88-3		
1,2,3-Trichlorobenzene	ND	ug/kg	6.2	1.0	04/25/02 04:35	BCK	87-61-6		
1,2,4-Trichlorobenzene	ND	ug/kg	6.2	1.0	04/25/02 04:35	BCK	120-82-1		
1,1,1-Trichloroethane	ND	ug/kg	6.2	1.0	04/25/02 04:35	BCK	71-55-6		
1,1,2-Trichloroethane	ND	ug/kg	6.2	1.0	04/25/02 04:35	BCK	79-00-5		
Trichloroethene	120	ug/kg	6.2	1.0	04/25/02 04:35	BCK	79-01-6		
Trichlorofluoromethane	ND	ug/kg	6.2	1.0	04/25/02 04:35	BCK	75-69-4		
1,2,3-Trichloropropane	ND	ug/kg	6.2	1.0	04/25/02 04:35	BCK	96-18-4		
1,2,4-Trimethylbenzene	ND	ug/kg	6.2	1.0	04/25/02 04:35	BCK	95-63-6		
1,3,5-Trimethylbenzene	ND	ug/kg	6.2	1.0	04/25/02 04:35	BCK	108-67-8		
Vinyl chloride	ND	ug/kg	12.	1.0	04/25/02 04:35	BCK	75-01-4		
m&p-Xylene	47.	ug/kg	12.	1.0	04/25/02 04:35	BCK			
o-Xylene	29.	ug/kg	6.2	1.0	04/25/02 04:35	BCK	95-47-6		
Toluene-d8 (S)	99	%		1.0	04/25/02 04:35	BCK	2037-26-5		
4-Bromofluorobenzene (S)	96	%		1.0	04/25/02 04:35	BCK	460-00-4		
Dibromofluoromethane (S)	92	%		1.0	04/25/02 04:35	BCK			
1,2-Dichloroethane-d4 (S)	89	%		1.0	04/25/02 04:35	BCK	17060-07-0		

Laboratory Certification IDs
NC Wastewater 12
NC Drinking Water 37706
SC 99006

REPORT OF LABORATORY ANALYSIS
This report shall not be reproduced, except in full,
without the written consent of Pace Analytical Services, Inc.

Laboratory Certification IDs
LA Wastewater 04034
VA Drinking Water 213
FL NELAP E87627

Pace Analytical™
www.pacelabs.com

Pace Analytical Services, Inc.
9800 Kincey Avenue, Suite 100
Huntersville, NC 28078
Phone: 704.875.9092
Fax: 704.875.9091

Lab Project Number: 9232215
Client Project ID: NC101047.0002/Worth

Lab Sample No: 922218649 Project Sample Number: 9232215-005 Date Collected: 04/18/02 13:00
Client Sample ID: GP-27(6-8') Matrix: Soil Date Received: 04/20/02 09:45

Parameters	Results	Units	Report Limit	Dilution	Analyzed	by	CAS No.	Ftnote	Reg Limit
Wet Chemistry									
Percent Moisture	Method: % Moisture								
Percent Moisture	20.5	%		0.8	04/22/02	BYH			
GC/MS Volatiles									
GC/MS VOCs by 8260, low level	Prep/Method: EPA 8260 / EPA 8260								
Acetone	1100	ug/kg	130	1.0	04/25/02 10:43	BCK	67-64-1	1	
Benzene	ND	ug/kg	6.3	1.0	04/25/02 10:43	BCK	71-43-2		
Bromobenzene	ND	ug/kg	6.3	1.0	04/25/02 10:43	BCK	108-86-1		
Bromochloromethane	ND	ug/kg	6.3	1.0	04/25/02 10:43	BCK	74-97-5		
Bromodichloromethane	ND	ug/kg	6.3	1.0	04/25/02 10:43	BCK	75-27-4		
Bromoform	ND	ug/kg	6.3	1.0	04/25/02 10:43	BCK	75-25-2		
Bromomethane	ND	ug/kg	13.	1.0	04/25/02 10:43	BCK	74-83-9		
2-Butanone (MEK)	ND	ug/kg	130	1.0	04/25/02 10:43	BCK	78-93-3		
n-Butylbenzene	ND	ug/kg	6.3	1.0	04/25/02 10:43	BCK	104-51-8		
sec-Butylbenzene	ND	ug/kg	6.3	1.0	04/25/02 10:43	BCK	135-98-8		
tert-Butylbenzene	ND	ug/kg	6.3	1.0	04/25/02 10:43	BCK	98-06-6		
Carbon disulfide	ND	ug/kg	6.3	1.0	04/25/02 10:43	BCK	75-15-0		
Carbon tetrachloride	ND	ug/kg	6.3	1.0	04/25/02 10:43	BCK	56-23-5		
Chlorobenzene	ND	ug/kg	6.3	1.0	04/25/02 10:43	BCK	108-90-7		
Chloroethane	ND	ug/kg	13.	1.0	04/25/02 10:43	BCK	75-00-3		
Chloroform	18.	ug/kg	6.3	1.0	04/25/02 10:43	BCK	67-66-3		
Chloromethane	ND	ug/kg	13.	1.0	04/25/02 10:43	BCK	74-87-3		
2-Chlorotoluene	ND	ug/kg	6.3	1.0	04/25/02 10:43	BCK	95-49-8		
4-Chlorotoluene	ND	ug/kg	6.3	1.0	04/25/02 10:43	BCK	106-43-4		
1,2-Dibromo-3-chloropropane	ND	ug/kg	6.3	1.0	04/25/02 10:43	BCK	96-12-8		
Dibromochloromethane	ND	ug/kg	6.3	1.0	04/25/02 10:43	BCK	124-48-1		
1,2-Dibromoethane (EDB)	ND	ug/kg	6.3	1.0	04/25/02 10:43	BCK	106-93-4		
Dibromomethane	ND	ug/kg	6.3	1.0	04/25/02 10:43	BCK	74-95-3		
1,2-Dichlorobenzene	20.	ug/kg	6.3	1.0	04/25/02 10:43	BCK	95-50-1		
1,3-Dichlorobenzene	ND	ug/kg	6.3	1.0	04/25/02 10:43	BCK	541-73-1		
1,4-Dichlorobenzene	ND	ug/kg	6.3	1.0	04/25/02 10:43	BCK	106-46-7		
Dichlorodifluoromethane	ND	ug/kg	13.	1.0	04/25/02 10:43	BCK	75-71-8		
1,1-Dichloroethane	ND	ug/kg	6.3	1.0	04/25/02 10:43	BCK	75-34-3		
1,2-Dichloroethane	ND	ug/kg	6.3	1.0	04/25/02 10:43	BCK	107-06-2		
1,1-Dichloroethene	ND	ug/kg	6.3	1.0	04/25/02 10:43	BCK	75-35-4		
cis-1,2-Dichloroethene	580	ug/kg	6.3	1.0	04/25/02 10:43	BCK	156-59-2	1	
trans-1,2-Dichloroethene	ND	ug/kg	6.3	1.0	04/25/02 10:43	BCK	156-60-5		

Laboratory Certification IDs
NC Wastewater 12
NC Drinking Water 37706
SC 99006

REPORT OF LABORATORY ANALYSIS
This report shall not be reproduced, except in full,
without the written consent of Pace Analytical Services, Inc.

Laboratory Certification IDs
LA Wastewater 04034
VA Drinking Water 213
FL NELAP E87627

Pace Analytical™
www.pacelabs.com

Pace Analytical Services, Inc.
9800 Kincey Avenue, Suite 100
Huntersville, NC 28078
Phone: 704.875.9092
Fax: 704.875.9091

Lab Project Number: 9232215
Client Project ID: NC101047.0002/Worth

Lab Sample No: 922218649 Project Sample Number: 9232215-005 Date Collected: 04/18/02 13:00
Client Sample ID: GP-27(6-8') Matrix: Soil Date Received: 04/20/02 09:45

Parameters	Results	Units	Report Limit	Dilution	Analyzed	by	CAS No.	Ftnote	Reg Limit
1,2-Dichloropropane	34.	ug/kg	6.3	1.0	04/25/02 10:43	BCK	78-87-5		
1,3-Dichloropropane	ND	ug/kg	6.3	1.0	04/25/02 10:43	BCK	142-28-9		
2,2-Dichloropropane	ND	ug/kg	6.3	1.0	04/25/02 10:43	BCK	594-20-7		
1,1-Dichloropropene	ND	ug/kg	6.3	1.0	04/25/02 10:43	BCK	563-58-6		
Diisopropyl ether	ND	ug/kg	6.3	1.0	04/25/02 10:43	BCK	108-20-3		
Ethylbenzene	28.	ug/kg	6.3	1.0	04/25/02 10:43	BCK	100-41-4		
Hexachloro-1,3-butadiene	ND	ug/kg	6.3	1.0	04/25/02 10:43	BCK	87-68-3		
Isopropylbenzene (Cumene)	ND	ug/kg	6.3	1.0	04/25/02 10:43	BCK	98-82-8		
p-Isopropyltoluene	ND	ug/kg	6.3	1.0	04/25/02 10:43	BCK	99-87-6		
Methylene chloride	30.	ug/kg	6.3	1.0	04/25/02 10:43	BCK	75-09-2	2	
4-Methyl-2-pentanone (MIBK)	ND	ug/kg	63.	1.0	04/25/02 10:43	BCK	108-10-1		
Methyl-tert-butyl ether	ND	ug/kg	6.3	1.0	04/25/02 10:43	BCK	1634-04-4		
Naphthalene	13.	ug/kg	6.3	1.0	04/25/02 10:43	BCK	91-20-3		
n-Propylbenzene	ND	ug/kg	6.3	1.0	04/25/02 10:43	BCK	103-65-1		
Styrene	ND	ug/kg	310	50.0	04/25/02 10:43	BCK	100-42-5		
1,1,1,2-Tetrachloroethane	ND	ug/kg	6.3	1.0	04/25/02 10:43	BCK	630-20-6		
1,1,2,2-Tetrachloroethane	ND	ug/kg	6.3	1.0	04/25/02 10:43	BCK	79-34-5		
Tetrachloroethene	73.	ug/kg	6.3	1.0	04/25/02 10:43	BCK	127-18-4		
Tetrahydrofuran	ND	ug/kg	63.	1.0	04/25/02 10:43	BCK	109-99-9		
Toluene	130	ug/kg	6.3	1.0	04/25/02 10:43	BCK	108-88-3		
1,2,3-Trichlorobenzene	ND	ug/kg	310	50.0	04/25/02 10:43	BCK	87-61-6		
1,2,4-Trichlorobenzene	ND	ug/kg	310	50.0	04/25/02 10:43	BCK	120-82-1		
1,1,1-Trichloroethane	ND	ug/kg	6.3	1.0	04/25/02 10:43	BCK	71-55-6		
1,1,2-Trichloroethane	9.6	ug/kg	6.3	1.0	04/25/02 10:43	BCK	79-00-5		
Trichloroethene	670	ug/kg	6.3	1.0	04/25/02 10:43	BCK	79-01-6	1	
Trichlorofluoromethane	ND	ug/kg	6.3	1.0	04/25/02 10:43	BCK	75-69-4		
1,2,3-Trichloropropane	ND	ug/kg	6.3	1.0	04/25/02 10:43	BCK	96-18-4		
1,2,4-Trimethylbenzene	6.3	ug/kg	6.3	1.0	04/25/02 10:43	BCK	95-63-6		
1,3,5-Trimethylbenzene	ND	ug/kg	6.3	1.0	04/25/02 10:43	BCK	108-67-8		
Vinyl chloride	ND	ug/kg	13.	1.0	04/25/02 10:43	BCK	75-01-4		
m&p-Xylene	110	ug/kg	13.	1.0	04/25/02 10:43	BCK			
o-Xylene	53.	ug/kg	6.3	1.0	04/25/02 10:43	BCK	95-47-6		
Toluene-d8 (S)	104	%		1.0	04/25/02 10:43	BCK	2037-26-5		
4-Bromofluorobenzene (S)	94	%		1.0	04/25/02 10:43	BCK	460-00-4		
Dibromofluoromethane (S)	88	%		1.0	04/25/02 10:43	BCK			
1,2-Dichloroethane-d4 (S)	84	%		1.0	04/25/02 10:43	BCK	17060-07-0		

Laboratory Certification IDs
NC Wastewater 12
NC Drinking Water 37706
SC 99006

REPORT OF LABORATORY ANALYSIS
This report shall not be reproduced, except in full,
without the written consent of Pace Analytical Services, Inc.

Laboratory Certification IDs
LA Wastewater 04034
VA Drinking Water 213
FL NELAP E87627

Pace Analytical™
www.pacelabs.com

Pace Analytical Services, Inc.
9800 Kincey Avenue, Suite 100
Huntersville, NC 28078
Phone: 704.875.9092
Fax: 704.875.9091

Lab Project Number: 9232215
Client Project ID: NC101047.0002/Worth

Lab Sample No: 922218656 Project Sample Number: 9232215-006 Date Collected: 04/18/02 12:35
Client Sample ID: GP-28(0-2') Matrix: Soil Date Received: 04/20/02 09:45

Parameters	Results	Units	Report Limit	Dilution	Analyzed	by	CAS No.	Ftnote	Reg Limit
Wet Chemistry									
Percent Moisture	Method: % Moisture								
Percent Moisture	10.1	%		0.9	04/22/02	BYH			
GC/MS Volatiles									
GC/MS VOCs by 8260, low level	Prep/Method: EPA 8260 / EPA 8260								
Acetone	ND	ug/kg	110	1.0	04/27/02 04:21	BCK	67-64-1		
Benzene	ND	ug/kg	5.6	1.0	04/27/02 04:21	BCK	71-43-2		
Bromobenzene	ND	ug/kg	5.6	1.0	04/27/02 04:21	BCK	108-86-1		
Bromochloromethane	ND	ug/kg	5.6	1.0	04/27/02 04:21	BCK	74-97-5		
Bromodichloromethane	ND	ug/kg	5.6	1.0	04/27/02 04:21	BCK	75-27-4		
Bromoform	ND	ug/kg	5.6	1.0	04/27/02 04:21	BCK	75-25-2		
Bromomethane	ND	ug/kg	11.	1.0	04/27/02 04:21	BCK	74-83-9		
2-Butanone (MEK)	ND	ug/kg	110	1.0	04/27/02 04:21	BCK	78-93-3		
n-Butylbenzene	ND	ug/kg	5.6	1.0	04/27/02 04:21	BCK	104-51-8		
sec-Butylbenzene	10.	ug/kg	5.6	1.0	04/27/02 04:21	BCK	135-98-8		
tert-Butylbenzene	ND	ug/kg	5.6	1.0	04/27/02 04:21	BCK	98-06-6		
Carbon disulfide	ND	ug/kg	5.6	1.0	04/27/02 04:21	BCK	75-15-0		
Carbon tetrachloride	ND	ug/kg	5.6	1.0	04/27/02 04:21	BCK	56-23-5		
Chlorobenzene	ND	ug/kg	5.6	1.0	04/27/02 04:21	BCK	108-90-7		
Chloroethane	ND	ug/kg	11.	1.0	04/27/02 04:21	BCK	75-00-3		
Chloroform	ND	ug/kg	5.6	1.0	04/27/02 04:21	BCK	67-66-3		
Chloromethane	ND	ug/kg	11.	1.0	04/27/02 04:21	BCK	74-87-3		
2-Chlorotoluene	ND	ug/kg	5.6	1.0	04/27/02 04:21	BCK	95-49-8		
4-Chlorotoluene	ND	ug/kg	5.6	1.0	04/27/02 04:21	BCK	106-43-4		
1,2-Dibromo-3-chloropropane	ND	ug/kg	5.6	1.0	04/27/02 04:21	BCK	96-12-8		
Dibromochloromethane	ND	ug/kg	5.6	1.0	04/27/02 04:21	BCK	124-48-1		
1,2-Dibromoethane (EDB)	ND	ug/kg	5.6	1.0	04/27/02 04:21	BCK	106-93-4		
Dibromomethane	ND	ug/kg	5.6	1.0	04/27/02 04:21	BCK	74-95-3		
1,2-Dichlorobenzene	550	ug/kg	5.6	1.0	04/27/02 04:21	BCK	95-50-1	1	
1,3-Dichlorobenzene	12.	ug/kg	5.6	1.0	04/27/02 04:21	BCK	541-73-1		
1,4-Dichlorobenzene	ND	ug/kg	5.6	1.0	04/27/02 04:21	BCK	106-46-7		
Dichlorodifluoromethane	ND	ug/kg	11.	1.0	04/27/02 04:21	BCK	75-71-8		
1,1-Dichloroethane	ND	ug/kg	5.6	1.0	04/27/02 04:21	BCK	75-34-3		
1,2-Dichloroethane	ND	ug/kg	5.6	1.0	04/27/02 04:21	BCK	107-06-2		
1,1-Dichloroethene	ND	ug/kg	5.6	1.0	04/27/02 04:21	BCK	75-35-4		
cis-1,2-Dichloroethene	ND	ug/kg	5.6	1.0	04/27/02 04:21	BCK	156-59-2		
trans-1,2-Dichloroethene	ND	ug/kg	5.6	1.0	04/27/02 04:21	BCK	156-60-5		

Laboratory Certification IDs
NC Wastewater 12
NC Drinking Water 37706
SC 99006

REPORT OF LABORATORY ANALYSIS
This report shall not be reproduced, except in full,
without the written consent of Pace Analytical Services, Inc.

Laboratory Certification IDs
LA Wastewater 04034
VA Drinking Water 213
FL NELAP E87627

Pace Analytical™
www.pacelabs.com

Pace Analytical Services, Inc.
9800 Kincey Avenue, Suite 100
Huntersville, NC 28078
Phone: 704.875.9092
Fax: 704.875.9091

Lab Project Number: 9232215
Client Project ID: NC101047.0002/Worth

Lab Sample No: 922218656 Project Sample Number: 9232215-006 Date Collected: 04/18/02 12:35
Client Sample ID: GP-28(0-2') Matrix: Soil Date Received: 04/20/02 09:45

Parameters	Results	Units	Report Limit	Dilution	Analyzed	by	CAS No.	Ftnote	Reg Limit
1,2-Dichloropropane	ND	ug/kg	5.6	1.0	04/27/02 04:21	BCK	78-87-5		
1,3-Dichloropropane	ND	ug/kg	5.6	1.0	04/27/02 04:21	BCK	142-28-9		
2,2-Dichloropropane	ND	ug/kg	5.6	1.0	04/27/02 04:21	BCK	594-20-7		
1,1-Dichloropropene	ND	ug/kg	5.6	1.0	04/27/02 04:21	BCK	563-58-6		
Diisopropyl ether	ND	ug/kg	5.6	1.0	04/27/02 04:21	BCK	108-20-3		
Ethylbenzene	ND	ug/kg	5.6	1.0	04/27/02 04:21	BCK	100-41-4		
Hexachloro-1,3-butadiene	ND	ug/kg	5.6	1.0	04/27/02 04:21	BCK	87-68-3		
Isopropylbenzene (Cumene)	ND	ug/kg	5.6	1.0	04/27/02 04:21	BCK	98-82-8		
p-Isopropyltoluene	13.	ug/kg	5.6	1.0	04/27/02 04:21	BCK	99-87-6		
Methylene chloride	ND	ug/kg	5.6	1.0	04/27/02 04:21	BCK	75-09-2		
4-Methyl-2-pentanone (MIBK)	ND	ug/kg	56.	1.0	04/27/02 04:21	BCK	108-10-1		
Methyl-tert-butyl ether	ND	ug/kg	5.6	1.0	04/27/02 04:21	BCK	1634-04-4		
Naphthalene	6.7	ug/kg	5.6	1.0	04/27/02 04:21	BCK	91-20-3		
n-Propylbenzene	ND	ug/kg	5.6	1.0	04/27/02 04:21	BCK	103-65-1		
Styrene	ND	ug/kg	5.6	1.0	04/27/02 04:21	BCK	100-42-5		
1,1,1,2-Tetrachloroethane	ND	ug/kg	5.6	1.0	04/27/02 04:21	BCK	630-20-6		
1,1,2,2-Tetrachloroethane	ND	ug/kg	5.6	1.0	04/27/02 04:21	BCK	79-34-5		
Tetrachloroethene	120	ug/kg	5.6	1.0	04/27/02 04:21	BCK	127-18-4		
Tetrahydrofuran	ND	ug/kg	56.	1.0	04/27/02 04:21	BCK	109-99-9		
Toluene	ND	ug/kg	5.6	1.0	04/27/02 04:21	BCK	108-88-3		
1,2,3-Trichlorobenzene	980	ug/kg	5.6	1.0	04/27/02 04:21	BCK	87-61-6	1	
1,2,4-Trichlorobenzene	980	ug/kg	5.6	1.0	04/27/02 04:21	BCK	120-82-1	1	
1,1,1-Trichloroethane	ND	ug/kg	5.6	1.0	04/27/02 04:21	BCK	71-55-6		
1,1,2-Trichloroethane	ND	ug/kg	5.6	1.0	04/27/02 04:21	BCK	79-00-5		
Trichloroethene	ND	ug/kg	5.6	1.0	04/27/02 04:21	BCK	79-01-6		
Trichlorofluoromethane	ND	ug/kg	5.6	1.0	04/27/02 04:21	BCK	75-69-4		
1,2,3-Trichloropropane	ND	ug/kg	5.6	1.0	04/27/02 04:21	BCK	96-18-4		
1,2,4-Trimethylbenzene	52.	ug/kg	5.6	1.0	04/27/02 04:21	BCK	95-63-6		
1,3,5-Trimethylbenzene	21.	ug/kg	5.6	1.0	04/27/02 04:21	BCK	108-67-8		
Vinyl chloride	ND	ug/kg	11.	1.0	04/27/02 04:21	BCK	75-01-4		
m&p-Xylene	ND	ug/kg	11.	1.0	04/27/02 04:21	BCK			
o-Xylene	6.4	ug/kg	5.6	1.0	04/27/02 04:21	BCK	95-47-6		
Toluene-d8 (S)	102	%		1.0	04/27/02 04:21	BCK	2037-26-5		
4-Bromofluorobenzene (S)	106	%		1.0	04/27/02 04:21	BCK	460-00-4		
Dibromofluoromethane (S)	95	%		1.0	04/27/02 04:21	BCK			
1,2-Dichloroethane-d4 (S)	96	%		1.0	04/27/02 04:21	BCK	17060-07-0		

Laboratory Certification IDs
NC Wastewater 12
NC Drinking Water 37706
SC 99006

REPORT OF LABORATORY ANALYSIS
This report shall not be reproduced, except in full,
without the written consent of Pace Analytical Services, Inc.

Laboratory Certification IDs
LA Wastewater 04034
VA Drinking Water 213
FL NELAP E87627

Pace Analytical™
www.pacelabs.com

Pace Analytical Services, Inc.
9800 Kincey Avenue, Suite 100
Huntersville, NC 28078
Phone: 704.875.9092
Fax: 704.875.9091

Lab Project Number: 9232215
Client Project ID: NC101047.0002/Worth

Lab Sample No: 922218664 Project Sample Number: 9232215-007 Date Collected: 04/19/02 10:50
Client Sample ID: GP-29(4-5.5') Matrix: Soil Date Received: 04/20/02 09:45

Parameters	Results	Units	Report Limit	Dilution	Analyzed	by	CAS No.	Ftnote	Reg Limit
Wet Chemistry									
Percent Moisture	Method: % Moisture								
Percent Moisture	13.2	%		0.9	04/22/02	BYH			
GC/MS Volatiles									
GC/MS VOCs by 8260, low level	Prep/Method: EPA 8260 / EPA 8260								
Acetone	ND	ug/kg	120	1.0	04/25/02 11:13	BCK	67-64-1		
Benzene	ND	ug/kg	5.8	1.0	04/25/02 11:13	BCK	71-43-2		
Bromobenzene	ND	ug/kg	5.8	1.0	04/25/02 11:13	BCK	108-86-1		
Bromochloromethane	ND	ug/kg	5.8	1.0	04/25/02 11:13	BCK	74-97-5		
Bromodichloromethane	ND	ug/kg	5.8	1.0	04/25/02 11:13	BCK	75-27-4		
Bromoform	ND	ug/kg	5.8	1.0	04/25/02 11:13	BCK	75-25-2		
Bromomethane	ND	ug/kg	12.	1.0	04/25/02 11:13	BCK	74-83-9		
2-Butanone (MEK)	ND	ug/kg	120	1.0	04/25/02 11:13	BCK	78-93-3		
n-Butylbenzene	ND	ug/kg	5.8	1.0	04/25/02 11:13	BCK	104-51-8		
sec-Butylbenzene	ND	ug/kg	5.8	1.0	04/25/02 11:13	BCK	135-98-8		
tert-Butylbenzene	ND	ug/kg	5.8	1.0	04/25/02 11:13	BCK	98-06-6		
Carbon disulfide	ND	ug/kg	5.8	1.0	04/25/02 11:13	BCK	75-15-0		
Carbon tetrachloride	ND	ug/kg	5.8	1.0	04/25/02 11:13	BCK	56-23-5		
Chlorobenzene	ND	ug/kg	5.8	1.0	04/25/02 11:13	BCK	108-90-7		
Chloroethane	ND	ug/kg	12.	1.0	04/25/02 11:13	BCK	75-00-3		
Chloroform	ND	ug/kg	5.8	1.0	04/25/02 11:13	BCK	67-66-3		
Chloromethane	ND	ug/kg	12.	1.0	04/25/02 11:13	BCK	74-87-3		
2-Chlorotoluene	ND	ug/kg	5.8	1.0	04/25/02 11:13	BCK	95-49-8		
4-Chlorotoluene	ND	ug/kg	5.8	1.0	04/25/02 11:13	BCK	106-43-4		
1,2-Dibromo-3-chloropropane	ND	ug/kg	5.8	1.0	04/25/02 11:13	BCK	96-12-8		
Dibromochloromethane	ND	ug/kg	5.8	1.0	04/25/02 11:13	BCK	124-48-1		
1,2-Dibromoethane (EDB)	ND	ug/kg	5.8	1.0	04/25/02 11:13	BCK	106-93-4		
Dibromomethane	ND	ug/kg	5.8	1.0	04/25/02 11:13	BCK	74-95-3		
1,2-Dichlorobenzene	ND	ug/kg	5.8	1.0	04/25/02 11:13	BCK	95-50-1		
1,3-Dichlorobenzene	ND	ug/kg	5.8	1.0	04/25/02 11:13	BCK	541-73-1		
1,4-Dichlorobenzene	ND	ug/kg	5.8	1.0	04/25/02 11:13	BCK	106-46-7		
Dichlorodifluoromethane	ND	ug/kg	12.	1.0	04/25/02 11:13	BCK	75-71-8		
1,1-Dichloroethane	ND	ug/kg	5.8	1.0	04/25/02 11:13	BCK	75-34-3		
1,2-Dichloroethane	ND	ug/kg	5.8	1.0	04/25/02 11:13	BCK	107-06-2		
1,1-Dichloroethene	ND	ug/kg	5.8	1.0	04/25/02 11:13	BCK	75-35-4		
cis-1,2-Dichloroethene	ND	ug/kg	5.8	1.0	04/25/02 11:13	BCK	156-59-2		
trans-1,2-Dichloroethene	ND	ug/kg	5.8	1.0	04/25/02 11:13	BCK	156-60-5		

Laboratory Certification IDs
NC Wastewater 12
NC Drinking Water 37706
SC 99006

REPORT OF LABORATORY ANALYSIS
This report shall not be reproduced, except in full,
without the written consent of Pace Analytical Services, Inc.

Laboratory Certification IDs
LA Wastewater 04034
VA Drinking Water 213
FL NELAP E87627

Pace Analytical™
www.pacelabs.com

Pace Analytical Services, Inc.
9800 Kincey Avenue, Suite 100
Huntersville, NC 28078
Phone: 704.875.9092
Fax: 704.875.9091

Lab Project Number: 9232215
Client Project ID: NC101047.0002/Worth

Lab Sample No: 922218664 Project Sample Number: 9232215-007 Date Collected: 04/19/02 10:50
Client Sample ID: GP-29(4-5.5') Matrix: Soil Date Received: 04/20/02 09:45

Parameters	Results	Units	Report Limit	Dilution	Analyzed	by	CAS No.	Ftnote	Reg Limit
1,2-Dichloropropane	ND	ug/kg	5.8	1.0	04/25/02 11:13	BCK	78-87-5		
1,3-Dichloropropane	ND	ug/kg	5.8	1.0	04/25/02 11:13	BCK	142-28-9		
2,2-Dichloropropane	ND	ug/kg	5.8	1.0	04/25/02 11:13	BCK	594-20-7		
1,1-Dichloropropene	ND	ug/kg	5.8	1.0	04/25/02 11:13	BCK	563-58-6		
Diisopropyl ether	ND	ug/kg	5.8	1.0	04/25/02 11:13	BCK	108-20-3		
Ethylbenzene	ND	ug/kg	5.8	1.0	04/25/02 11:13	BCK	100-41-4		
Hexachloro-1,3-butadiene	ND	ug/kg	5.8	1.0	04/25/02 11:13	BCK	87-68-3		
Isopropylbenzene (Cumene)	ND	ug/kg	5.8	1.0	04/25/02 11:13	BCK	98-82-8		
p-Isopropyltoluene	ND	ug/kg	5.8	1.0	04/25/02 11:13	BCK	99-87-6		
Methylene chloride	6.1	ug/kg	5.8	1.0	04/25/02 11:13	BCK	75-09-2	2	
4-Methyl-2-pentanone (MIBK)	ND	ug/kg	58.	1.0	04/25/02 11:13	BCK	108-10-1		
Methyl-tert-butyl ether	ND	ug/kg	5.8	1.0	04/25/02 11:13	BCK	1634-04-4		
Naphthalene	ND	ug/kg	5.8	1.0	04/25/02 11:13	BCK	91-20-3		
n-Propylbenzene	ND	ug/kg	5.8	1.0	04/25/02 11:13	BCK	103-65-1		
Styrene	ND	ug/kg	5.8	1.0	04/25/02 11:13	BCK	100-42-5		
1,1,1,2-Tetrachloroethane	ND	ug/kg	5.8	1.0	04/25/02 11:13	BCK	630-20-6		
1,1,2,2-Tetrachloroethane	ND	ug/kg	5.8	1.0	04/25/02 11:13	BCK	79-34-5		
Tetrachloroethene	8.2	ug/kg	5.8	1.0	04/25/02 11:13	BCK	127-18-4		
Tetrahydrofuran	ND	ug/kg	58.	1.0	04/25/02 11:13	BCK	109-99-9		
Toluene	ND	ug/kg	5.8	1.0	04/25/02 11:13	BCK	108-88-3		
1,2,3-Trichlorobenzene	ND	ug/kg	5.8	1.0	04/25/02 11:13	BCK	87-61-6		
1,2,4-Trichlorobenzene	ND	ug/kg	5.8	1.0	04/25/02 11:13	BCK	120-82-1		
1,1,1-Trichloroethane	ND	ug/kg	5.8	1.0	04/25/02 11:13	BCK	71-55-6		
1,1,2-Trichloroethane	ND	ug/kg	5.8	1.0	04/25/02 11:13	BCK	79-00-5		
Trichloroethene	10.	ug/kg	5.8	1.0	04/25/02 11:13	BCK	79-01-6		
Trichlorofluoromethane	ND	ug/kg	5.8	1.0	04/25/02 11:13	BCK	75-69-4		
1,2,3-Trichloropropane	ND	ug/kg	5.8	1.0	04/25/02 11:13	BCK	96-18-4		
1,2,4-Trimethylbenzene	ND	ug/kg	5.8	1.0	04/25/02 11:13	BCK	95-63-6		
1,3,5-Trimethylbenzene	ND	ug/kg	5.8	1.0	04/25/02 11:13	BCK	108-67-8		
Vinyl chloride	ND	ug/kg	12.	1.0	04/25/02 11:13	BCK	75-01-4		
m&p-Xylene	ND	ug/kg	12.	1.0	04/25/02 11:13	BCK			
o-Xylene	ND	ug/kg	5.8	1.0	04/25/02 11:13	BCK	95-47-6		
Toluene-d8 (S)	100	%		1.0	04/25/02 11:13	BCK	2037-26-5		
4-Bromofluorobenzene (S)	92	%		1.0	04/25/02 11:13	BCK	460-00-4		
Dibromofluoromethane (S)	94	%		1.0	04/25/02 11:13	BCK			
1,2-Dichloroethane-d4 (S)	88	%		1.0	04/25/02 11:13	BCK	17060-07-0		

Laboratory Certification IDs
NC Wastewater 12
NC Drinking Water 37706
SC 99006

REPORT OF LABORATORY ANALYSIS
This report shall not be reproduced, except in full,
without the written consent of Pace Analytical Services, Inc.

Laboratory Certification IDs
LA Wastewater 04034
VA Drinking Water 213
FL NELAP E87627

Pace Analytical™
www.pacelabs.com

Pace Analytical Services, Inc.
9800 Kincey Avenue, Suite 100
Huntersville, NC 28078
Phone: 704.875.9092
Fax: 704.875.9091

Lab Project Number: 9232215
Client Project ID: NC101047.0002/Worth

Lab Sample No: 922218672 Project Sample Number: 9232215-008 Date Collected: 04/18/02 15:15
Client Sample ID: GP-30(2-4') Matrix: Soil Date Received: 04/20/02 09:45

Parameters	Results	Units	Report Limit	Dilution	Analyzed	by	CAS No.	Ftnote	Reg Limit
Wet Chemistry									
Percent Moisture	Method: % Moisture								
Percent Moisture	16.2	%		0.8	04/22/02	BYH			
GC/MS Volatiles									
GC/MS VOCs by 8260, low level	Prep/Method: EPA 8260 / EPA 8260								
Acetone	ND	ug/kg	120	1.0	04/25/02 11:43	BCK	67-64-1		
Benzene	ND	ug/kg	6.0	1.0	04/25/02 11:43	BCK	71-43-2		
Bromobenzene	ND	ug/kg	6.0	1.0	04/25/02 11:43	BCK	108-86-1		
Bromochloromethane	ND	ug/kg	6.0	1.0	04/25/02 11:43	BCK	74-97-5		
Bromodichloromethane	ND	ug/kg	6.0	1.0	04/25/02 11:43	BCK	75-27-4		
Bromoform	ND	ug/kg	6.0	1.0	04/25/02 11:43	BCK	75-25-2		
Bromomethane	ND	ug/kg	12.	1.0	04/25/02 11:43	BCK	74-83-9		
2-Butanone (MEK)	ND	ug/kg	120	1.0	04/25/02 11:43	BCK	78-93-3		
n-Butylbenzene	ND	ug/kg	6.0	1.0	04/25/02 11:43	BCK	104-51-8		
sec-Butylbenzene	ND	ug/kg	6.0	1.0	04/25/02 11:43	BCK	135-98-8		
tert-Butylbenzene	ND	ug/kg	6.0	1.0	04/25/02 11:43	BCK	98-06-6		
Carbon disulfide	ND	ug/kg	6.0	1.0	04/25/02 11:43	BCK	75-15-0		
Carbon tetrachloride	ND	ug/kg	6.0	1.0	04/25/02 11:43	BCK	56-23-5		
Chlorobenzene	ND	ug/kg	6.0	1.0	04/25/02 11:43	BCK	108-90-7		
Chloroethane	ND	ug/kg	12.	1.0	04/25/02 11:43	BCK	75-00-3		
Chloroform	ND	ug/kg	6.0	1.0	04/25/02 11:43	BCK	67-66-3		
Chloromethane	ND	ug/kg	12.	1.0	04/25/02 11:43	BCK	74-87-3		
2-Chlorotoluene	ND	ug/kg	6.0	1.0	04/25/02 11:43	BCK	95-49-8		
4-Chlorotoluene	ND	ug/kg	6.0	1.0	04/25/02 11:43	BCK	106-43-4		
1,2-Dibromo-3-chloropropane	ND	ug/kg	6.0	1.0	04/25/02 11:43	BCK	96-12-8		
Dibromochloromethane	ND	ug/kg	6.0	1.0	04/25/02 11:43	BCK	124-48-1		
1,2-Dibromoethane (EDB)	ND	ug/kg	6.0	1.0	04/25/02 11:43	BCK	106-93-4		
Dibromomethane	ND	ug/kg	6.0	1.0	04/25/02 11:43	BCK	74-95-3		
1,2-Dichlorobenzene	ND	ug/kg	6.0	1.0	04/25/02 11:43	BCK	95-50-1		
1,3-Dichlorobenzene	ND	ug/kg	6.0	1.0	04/25/02 11:43	BCK	541-73-1		
1,4-Dichlorobenzene	ND	ug/kg	6.0	1.0	04/25/02 11:43	BCK	106-46-7		
Dichlorodifluoromethane	ND	ug/kg	12.	1.0	04/25/02 11:43	BCK	75-71-8		
1,1-Dichloroethane	ND	ug/kg	6.0	1.0	04/25/02 11:43	BCK	75-34-3		
1,2-Dichloroethane	ND	ug/kg	6.0	1.0	04/25/02 11:43	BCK	107-06-2		
1,1-Dichloroethene	ND	ug/kg	6.0	1.0	04/25/02 11:43	BCK	75-35-4		
cis-1,2-Dichloroethene	ND	ug/kg	6.0	1.0	04/25/02 11:43	BCK	156-59-2		
trans-1,2-Dichloroethene	ND	ug/kg	6.0	1.0	04/25/02 11:43	BCK	156-60-5		

Laboratory Certification IDs
NC Wastewater 12
NC Drinking Water 37706
SC 99006

REPORT OF LABORATORY ANALYSIS
This report shall not be reproduced, except in full,
without the written consent of Pace Analytical Services, Inc.

Laboratory Certification IDs
LA Wastewater 04034
VA Drinking Water 213
FL NELAP E87627

Pace Analytical™
www.pacelabs.com

Pace Analytical Services, Inc.
9800 Kincey Avenue, Suite 100
Huntersville, NC 28078
Phone: 704.875.9092
Fax: 704.875.9091

Lab Project Number: 9232215
Client Project ID: NC101047.0002/Worth

Lab Sample No: 922218672 Project Sample Number: 9232215-008 Date Collected: 04/18/02 15:15
Client Sample ID: GP-30(2-4') Matrix: Soil Date Received: 04/20/02 09:45

Parameters	Results	Units	Report Limit	Dilution	Analyzed	by	CAS No.	Ftnote	Reg Limit
1,2-Dichloropropane	ND	ug/kg	6.0	1.0	04/25/02 11:43	BCK	78-87-5		
1,3-Dichloropropane	ND	ug/kg	6.0	1.0	04/25/02 11:43	BCK	142-28-9		
2,2-Dichloropropane	ND	ug/kg	6.0	1.0	04/25/02 11:43	BCK	594-20-7		
1,1-Dichloropropene	ND	ug/kg	6.0	1.0	04/25/02 11:43	BCK	563-58-6		
Diisopropyl ether	ND	ug/kg	6.0	1.0	04/25/02 11:43	BCK	108-20-3		
Ethylbenzene	ND	ug/kg	6.0	1.0	04/25/02 11:43	BCK	100-41-4		
Hexachloro-1,3-butadiene	ND	ug/kg	6.0	1.0	04/25/02 11:43	BCK	87-68-3		
Isopropylbenzene (Cumene)	ND	ug/kg	6.0	1.0	04/25/02 11:43	BCK	98-82-8		
p-Isopropyltoluene	ND	ug/kg	6.0	1.0	04/25/02 11:43	BCK	99-87-6		
Methylene chloride	ND	ug/kg	6.0	1.0	04/25/02 11:43	BCK	75-09-2		
4-Methyl-2-pentanone (MIBK)	ND	ug/kg	60.	1.0	04/25/02 11:43	BCK	108-10-1		
Methyl-tert-butyl ether	ND	ug/kg	6.0	1.0	04/25/02 11:43	BCK	1634-04-4		
Naphthalene	ND	ug/kg	6.0	1.0	04/25/02 11:43	BCK	91-20-3		
n-Propylbenzene	ND	ug/kg	6.0	1.0	04/25/02 11:43	BCK	103-65-1		
Styrene	ND	ug/kg	6.0	1.0	04/25/02 11:43	BCK	100-42-5		
1,1,1,2-Tetrachloroethane	ND	ug/kg	6.0	1.0	04/25/02 11:43	BCK	630-20-6		
1,1,2,2-Tetrachloroethane	ND	ug/kg	6.0	1.0	04/25/02 11:43	BCK	79-34-5		
Tetrachloroethene	ND	ug/kg	6.0	1.0	04/25/02 11:43	BCK	127-18-4		
Tetrahydrofuran	ND	ug/kg	60.	1.0	04/25/02 11:43	BCK	109-99-9		
Toluene	ND	ug/kg	6.0	1.0	04/25/02 11:43	BCK	108-88-3		
1,2,3-Trichlorobenzene	ND	ug/kg	6.0	1.0	04/25/02 11:43	BCK	87-61-6		
1,2,4-Trichlorobenzene	ND	ug/kg	6.0	1.0	04/25/02 11:43	BCK	120-82-1		
1,1,1-Trichloroethane	ND	ug/kg	6.0	1.0	04/25/02 11:43	BCK	71-55-6		
1,1,2-Trichloroethane	ND	ug/kg	6.0	1.0	04/25/02 11:43	BCK	79-00-5		
Trichloroethene	ND	ug/kg	6.0	1.0	04/25/02 11:43	BCK	79-01-6		
Trichlorofluoromethane	ND	ug/kg	6.0	1.0	04/25/02 11:43	BCK	75-69-4		
1,2,3-Trichloropropane	ND	ug/kg	6.0	1.0	04/25/02 11:43	BCK	96-18-4		
1,2,4-Trimethylbenzene	ND	ug/kg	6.0	1.0	04/25/02 11:43	BCK	95-63-6		
1,3,5-Trimethylbenzene	ND	ug/kg	6.0	1.0	04/25/02 11:43	BCK	108-67-8		
Vinyl chloride	ND	ug/kg	12.	1.0	04/25/02 11:43	BCK	75-01-4		
m&p-Xylene	ND	ug/kg	12.	1.0	04/25/02 11:43	BCK			
o-Xylene	ND	ug/kg	6.0	1.0	04/25/02 11:43	BCK	95-47-6		
Toluene-d8 (S)	102	%		1.0	04/25/02 11:43	BCK	2037-26-5		
4-Bromofluorobenzene (S)	90	%		1.0	04/25/02 11:43	BCK	460-00-4		
Dibromofluoromethane (S)	88	%		1.0	04/25/02 11:43	BCK			
1,2-Dichloroethane-d4 (S)	80	%		1.0	04/25/02 11:43	BCK	17060-07-0		

Laboratory Certification IDs
NC Wastewater 12
NC Drinking Water 37706
SC 99006

REPORT OF LABORATORY ANALYSIS
This report shall not be reproduced, except in full,
without the written consent of Pace Analytical Services, Inc.

Laboratory Certification IDs
LA Wastewater 04034
VA Drinking Water 213
FL NELAP E87627

Pace Analytical™
www.pacelabs.com

Pace Analytical Services, Inc.
9800 Kincey Avenue, Suite 100
Huntersville, NC 28078
Phone: 704.875.9092
Fax: 704.875.9091

Lab Project Number: 9232215
Client Project ID: NC101047.0002/Worth

Lab Sample No: 922218680 Project Sample Number: 9232215-009 Date Collected: 04/18/02 15:50
Client Sample ID: GP-31(5.5-7') Matrix: Soil Date Received: 04/20/02 09:45

Parameters	Results	Units	Report Limit	Dilution	Analyzed	by	CAS No.	Ftnote	Reg Limit
Wet Chemistry									
Percent Moisture	Method: % Moisture								
Percent Moisture	18.3	%		0.8	04/22/02	BYH			
GC/MS Volatiles									
GC/MS VOCs by 8260, low level	Prep/Method: EPA 8260 / EPA 8260								
Acetone	ND	ug/kg	120	1.0	04/25/02 12:13	BCK	67-64-1		
Benzene	ND	ug/kg	6.1	1.0	04/25/02 12:13	BCK	71-43-2		
Bromobenzene	ND	ug/kg	6.1	1.0	04/25/02 12:13	BCK	108-86-1		
Bromochloromethane	ND	ug/kg	6.1	1.0	04/25/02 12:13	BCK	74-97-5		
Bromodichloromethane	ND	ug/kg	6.1	1.0	04/25/02 12:13	BCK	75-27-4		
Bromoform	ND	ug/kg	6.1	1.0	04/25/02 12:13	BCK	75-25-2		
Bromomethane	ND	ug/kg	12.	1.0	04/25/02 12:13	BCK	74-83-9		
2-Butanone (MEK)	ND	ug/kg	120	1.0	04/25/02 12:13	BCK	78-93-3		
n-Butylbenzene	ND	ug/kg	6.1	1.0	04/25/02 12:13	BCK	104-51-8		
sec-Butylbenzene	ND	ug/kg	6.1	1.0	04/25/02 12:13	BCK	135-98-8		
tert-Butylbenzene	ND	ug/kg	6.1	1.0	04/25/02 12:13	BCK	98-06-6		
Carbon disulfide	ND	ug/kg	6.1	1.0	04/25/02 12:13	BCK	75-15-0		
Carbon tetrachloride	ND	ug/kg	6.1	1.0	04/25/02 12:13	BCK	56-23-5		
Chlorobenzene	ND	ug/kg	6.1	1.0	04/25/02 12:13	BCK	108-90-7		
Chloroethane	ND	ug/kg	12.	1.0	04/25/02 12:13	BCK	75-00-3		
Chloroform	ND	ug/kg	6.1	1.0	04/25/02 12:13	BCK	67-66-3		
Chloromethane	ND	ug/kg	12.	1.0	04/25/02 12:13	BCK	74-87-3		
2-Chlorotoluene	ND	ug/kg	6.1	1.0	04/25/02 12:13	BCK	95-49-8		
4-Chlorotoluene	ND	ug/kg	6.1	1.0	04/25/02 12:13	BCK	106-43-4		
1,2-Dibromo-3-chloropropane	ND	ug/kg	6.1	1.0	04/25/02 12:13	BCK	96-12-8		
Dibromochloromethane	ND	ug/kg	6.1	1.0	04/25/02 12:13	BCK	124-48-1		
1,2-Dibromoethane (EDB)	ND	ug/kg	6.1	1.0	04/25/02 12:13	BCK	106-93-4		
Dibromomethane	ND	ug/kg	6.1	1.0	04/25/02 12:13	BCK	74-95-3		
1,2-Dichlorobenzene	ND	ug/kg	6.1	1.0	04/25/02 12:13	BCK	95-50-1		
1,3-Dichlorobenzene	ND	ug/kg	6.1	1.0	04/25/02 12:13	BCK	541-73-1		
1,4-Dichlorobenzene	ND	ug/kg	6.1	1.0	04/25/02 12:13	BCK	106-46-7		
Dichlorodifluoromethane	ND	ug/kg	12.	1.0	04/25/02 12:13	BCK	75-71-8		
1,1-Dichloroethane	ND	ug/kg	6.1	1.0	04/25/02 12:13	BCK	75-34-3		
1,2-Dichloroethane	ND	ug/kg	6.1	1.0	04/25/02 12:13	BCK	107-06-2		
1,1-Dichloroethene	ND	ug/kg	6.1	1.0	04/25/02 12:13	BCK	75-35-4		
cis-1,2-Dichloroethene	ND	ug/kg	6.1	1.0	04/25/02 12:13	BCK	156-59-2		
trans-1,2-Dichloroethene	ND	ug/kg	6.1	1.0	04/25/02 12:13	BCK	156-60-5		

Laboratory Certification IDs
NC Wastewater 12
NC Drinking Water 37706
SC 99006

REPORT OF LABORATORY ANALYSIS
This report shall not be reproduced, except in full,
without the written consent of Pace Analytical Services, Inc.

Laboratory Certification IDs
LA Wastewater 04034
VA Drinking Water 213
FL NELAP E87627

Pace Analytical™
www.pacelabs.com

Pace Analytical Services, Inc.
9800 Kincey Avenue, Suite 100
Huntersville, NC 28078
Phone: 704.875.9092
Fax: 704.875.9091

Lab Project Number: 9232215
Client Project ID: NC101047.0002/Worth

Lab Sample No: 922218680 Project Sample Number: 9232215-009 Date Collected: 04/18/02 15:50
Client Sample ID: GP-31(5.5-7') Matrix: Soil Date Received: 04/20/02 09:45

Parameters	Results	Units	Report Limit	Dilution	Analyzed	by	CAS No.	Ftnote	Reg Limit
1,2-Dichloropropane	ND	ug/kg	6.1	1.0	04/25/02 12:13	BCK	78-87-5		
1,3-Dichloropropane	ND	ug/kg	6.1	1.0	04/25/02 12:13	BCK	142-28-9		
2,2-Dichloropropane	ND	ug/kg	6.1	1.0	04/25/02 12:13	BCK	594-20-7		
1,1-Dichloropropene	ND	ug/kg	6.1	1.0	04/25/02 12:13	BCK	563-58-6		
Diisopropyl ether	ND	ug/kg	6.1	1.0	04/25/02 12:13	BCK	108-20-3		
Ethylbenzene	ND	ug/kg	6.1	1.0	04/25/02 12:13	BCK	100-41-4		
Hexachloro-1,3-butadiene	ND	ug/kg	6.1	1.0	04/25/02 12:13	BCK	87-68-3		
Isopropylbenzene (Cumene)	ND	ug/kg	6.1	1.0	04/25/02 12:13	BCK	98-82-8		
p-Isopropyltoluene	ND	ug/kg	6.1	1.0	04/25/02 12:13	BCK	99-87-6		
Methylene chloride	7.6	ug/kg	6.1	1.0	04/25/02 12:13	BCK	75-09-2	2	
4-Methyl-2-pentanone (MIBK)	ND	ug/kg	61.	1.0	04/25/02 12:13	BCK	108-10-1		
Methyl-tert-butyl ether	ND	ug/kg	6.1	1.0	04/25/02 12:13	BCK	1634-04-4		
Naphthalene	ND	ug/kg	6.1	1.0	04/25/02 12:13	BCK	91-20-3		
n-Propylbenzene	ND	ug/kg	6.1	1.0	04/25/02 12:13	BCK	103-65-1		
Styrene	ND	ug/kg	6.1	1.0	04/25/02 12:13	BCK	100-42-5		
1,1,1,2-Tetrachloroethane	ND	ug/kg	6.1	1.0	04/25/02 12:13	BCK	630-20-6		
1,1,2,2-Tetrachloroethane	ND	ug/kg	6.1	1.0	04/25/02 12:13	BCK	79-34-5		
Tetrachloroethene	15.	ug/kg	6.1	1.0	04/25/02 12:13	BCK	127-18-4		
Tetrahydrofuran	ND	ug/kg	61.	1.0	04/25/02 12:13	BCK	109-99-9		
Toluene	7.9	ug/kg	6.1	1.0	04/25/02 12:13	BCK	108-88-3		
1,2,3-Trichlorobenzene	ND	ug/kg	6.1	1.0	04/25/02 12:13	BCK	87-61-6		
1,2,4-Trichlorobenzene	ND	ug/kg	6.1	1.0	04/25/02 12:13	BCK	120-82-1		
1,1,1-Trichloroethane	ND	ug/kg	6.1	1.0	04/25/02 12:13	BCK	71-55-6		
1,1,2-Trichloroethane	ND	ug/kg	6.1	1.0	04/25/02 12:13	BCK	79-00-5		
Trichloroethene	2100	ug/kg	6.1	1.0	04/25/02 12:13	BCK	79-01-6	1	
Trichlorofluoromethane	ND	ug/kg	6.1	1.0	04/25/02 12:13	BCK	75-69-4		
1,2,3-Trichloropropane	ND	ug/kg	6.1	1.0	04/25/02 12:13	BCK	96-18-4		
1,2,4-Trimethylbenzene	ND	ug/kg	6.1	1.0	04/25/02 12:13	BCK	95-63-6		
1,3,5-Trimethylbenzene	ND	ug/kg	6.1	1.0	04/25/02 12:13	BCK	108-67-8		
Vinyl chloride	ND	ug/kg	12.	1.0	04/25/02 12:13	BCK	75-01-4		
m&p-Xylene	ND	ug/kg	12.	1.0	04/25/02 12:13	BCK			
o-Xylene	ND	ug/kg	6.1	1.0	04/25/02 12:13	BCK	95-47-6		
Toluene-d8 (S)	99	%		1.0	04/25/02 12:13	BCK	2037-26-5		
4-Bromofluorobenzene (S)	83	%		1.0	04/25/02 12:13	BCK	460-00-4		
Dibromofluoromethane (S)	96	%		1.0	04/25/02 12:13	BCK			
1,2-Dichloroethane-d4 (S)	90	%		1.0	04/25/02 12:13	BCK	17060-07-0		

Laboratory Certification IDs
NC Wastewater 12
NC Drinking Water 37706
SC 99006

REPORT OF LABORATORY ANALYSIS
This report shall not be reproduced, except in full,
without the written consent of Pace Analytical Services, Inc.

Laboratory Certification IDs
LA Wastewater 04034
VA Drinking Water 213
FL NELAP E87627

Pace Analytical™
www.pacelabs.com

Pace Analytical Services, Inc.
9800 Kincey Avenue, Suite 100
Huntersville, NC 28078
Phone: 704.875.9092
Fax: 704.875.9091

Lab Project Number: 9232215
Client Project ID: NC101047.0002/Worth

Lab Sample No: 922218698 Project Sample Number: 9232215-010 Date Collected: 04/18/02 16:30
Client Sample ID: GP-32(0-2') Matrix: Soil Date Received: 04/20/02 09:45

Parameters	Results	Units	Report Limit	Dilution	Analyzed	by	CAS No.	Ftnote	Reg Limit
Wet Chemistry									
Percent Moisture	Method: % Moisture								
Percent Moisture	15.0	%		0.8	04/22/02	BYH			
GC/MS Volatiles									
GC/MS VOCs by 8260, low level	Prep/Method: EPA 8260 / EPA 8260								
Acetone	170	ug/kg	120	1.0	04/25/02 12:44	BCK	67-64-1		
Benzene	ND	ug/kg	5.9	1.0	04/25/02 12:44	BCK	71-43-2		
Bromobenzene	ND	ug/kg	5.9	1.0	04/25/02 12:44	BCK	108-86-1		
Bromochloromethane	ND	ug/kg	5.9	1.0	04/25/02 12:44	BCK	74-97-5		
Bromodichloromethane	ND	ug/kg	5.9	1.0	04/25/02 12:44	BCK	75-27-4		
Bromoform	ND	ug/kg	5.9	1.0	04/25/02 12:44	BCK	75-25-2		
Bromomethane	ND	ug/kg	12.	1.0	04/25/02 12:44	BCK	74-83-9		
2-Butanone (MEK)	ND	ug/kg	120	1.0	04/25/02 12:44	BCK	78-93-3		
n-Butylbenzene	ND	ug/kg	5.9	1.0	04/25/02 12:44	BCK	104-51-8		
sec-Butylbenzene	ND	ug/kg	5.9	1.0	04/25/02 12:44	BCK	135-98-8		
tert-Butylbenzene	ND	ug/kg	5.9	1.0	04/25/02 12:44	BCK	98-06-6		
Carbon disulfide	ND	ug/kg	5.9	1.0	04/25/02 12:44	BCK	75-15-0		
Carbon tetrachloride	ND	ug/kg	5.9	1.0	04/25/02 12:44	BCK	56-23-5		
Chlorobenzene	ND	ug/kg	5.9	1.0	04/25/02 12:44	BCK	108-90-7		
Chloroethane	ND	ug/kg	12.	1.0	04/25/02 12:44	BCK	75-00-3		
Chloroform	ND	ug/kg	5.9	1.0	04/25/02 12:44	BCK	67-66-3		
Chloromethane	ND	ug/kg	12.	1.0	04/25/02 12:44	BCK	74-87-3		
2-Chlorotoluene	ND	ug/kg	5.9	1.0	04/25/02 12:44	BCK	95-49-8		
4-Chlorotoluene	ND	ug/kg	5.9	1.0	04/25/02 12:44	BCK	106-43-4		
1,2-Dibromo-3-chloropropane	ND	ug/kg	5.9	1.0	04/25/02 12:44	BCK	96-12-8		
Dibromochloromethane	ND	ug/kg	5.9	1.0	04/25/02 12:44	BCK	124-48-1		
1,2-Dibromoethane (EDB)	ND	ug/kg	5.9	1.0	04/25/02 12:44	BCK	106-93-4		
Dibromomethane	ND	ug/kg	5.9	1.0	04/25/02 12:44	BCK	74-95-3		
1,2-Dichlorobenzene	630	ug/kg	290	50.0	04/25/02 12:44	BCK	95-50-1		
1,3-Dichlorobenzene	11.	ug/kg	5.9	1.0	04/25/02 12:44	BCK	541-73-1		
1,4-Dichlorobenzene	ND	ug/kg	5.9	1.0	04/25/02 12:44	BCK	106-46-7		
Dichlorodifluoromethane	ND	ug/kg	12.	1.0	04/25/02 12:44	BCK	75-71-8		
1,1-Dichloroethane	ND	ug/kg	5.9	1.0	04/25/02 12:44	BCK	75-34-3		
1,2-Dichloroethane	7.5	ug/kg	5.9	1.0	04/25/02 12:44	BCK	107-06-2		
1,1-Dichloroethene	25.	ug/kg	5.9	1.0	04/25/02 12:44	BCK	75-35-4		
cis-1,2-Dichloroethene	14.	ug/kg	5.9	1.0	04/25/02 12:44	BCK	156-59-2		
trans-1,2-Dichloroethene	25.	ug/kg	5.9	1.0	04/25/02 12:44	BCK	156-60-5		

Laboratory Certification IDs
NC Wastewater 12
NC Drinking Water 37706
SC 99006

REPORT OF LABORATORY ANALYSIS
This report shall not be reproduced, except in full,
without the written consent of Pace Analytical Services, Inc.

Laboratory Certification IDs
LA Wastewater 04034
VA Drinking Water 213
FL NELAP E87627

Pace Analytical™
www.pacelabs.com

Pace Analytical Services, Inc.
9800 Kincey Avenue, Suite 100
Huntersville, NC 28078
Phone: 704.875.9092
Fax: 704.875.9091

Lab Project Number: 9232215
Client Project ID: NC101047.0002/Worth

Lab Sample No: 922218698 Project Sample Number: 9232215-010 Date Collected: 04/18/02 16:30
Client Sample ID: GP-32(0-2') Matrix: Soil Date Received: 04/20/02 09:45

Parameters	Results	Units	Report Limit	Dilution	Analyzed	by	CAS No.	Ftnote	Reg Limit
1,2-Dichloropropane	ND	ug/kg	5.9	1.0	04/25/02 12:44	BCK	78-87-5		
1,3-Dichloropropane	ND	ug/kg	5.9	1.0	04/25/02 12:44	BCK	142-28-9		
2,2-Dichloropropane	ND	ug/kg	5.9	1.0	04/25/02 12:44	BCK	594-20-7		
1,1-Dichloropropene	ND	ug/kg	5.9	1.0	04/25/02 12:44	BCK	563-58-6		
Diisopropyl ether	ND	ug/kg	5.9	1.0	04/25/02 12:44	BCK	108-20-3		
Ethylbenzene	46.	ug/kg	5.9	1.0	04/25/02 12:44	BCK	100-41-4		
Hexachloro-1,3-butadiene	ND	ug/kg	5.9	1.0	04/25/02 12:44	BCK	87-68-3		
Isopropylbenzene (Cumene)	8.5	ug/kg	5.9	1.0	04/25/02 12:44	BCK	98-82-8		
p-Isopropyltoluene	ND	ug/kg	5.9	1.0	04/25/02 12:44	BCK	99-87-6		
Methylene chloride	17.	ug/kg	5.9	1.0	04/25/02 12:44	BCK	75-09-2	2	
4-Methyl-2-pentanone (MIBK)	75.	ug/kg	59.	1.0	04/25/02 12:44	BCK	108-10-1		
Methyl-tert-butyl ether	ND	ug/kg	5.9	1.0	04/25/02 12:44	BCK	1634-04-4		
Naphthalene	7.7	ug/kg	5.9	1.0	04/25/02 12:44	BCK	91-20-3		
n-Propylbenzene	ND	ug/kg	5.9	1.0	04/25/02 12:44	BCK	103-65-1		
Styrene	9.7	ug/kg	5.9	1.0	04/25/02 12:44	BCK	100-42-5		
1,1,1,2-Tetrachloroethane	ND	ug/kg	5.9	1.0	04/25/02 12:44	BCK	630-20-6		
1,1,2,2-Tetrachloroethane	ND	ug/kg	5.9	1.0	04/25/02 12:44	BCK	79-34-5		
Tetrachloroethene	870	ug/kg	290	50.0	04/25/02 12:44	BCK	127-18-4		
Tetrahydrofuran	ND	ug/kg	59.	1.0	04/25/02 12:44	BCK	109-99-9		
Toluene	84.	ug/kg	5.9	1.0	04/25/02 12:44	BCK	108-88-3		
1,2,3-Trichlorobenzene	4600	ug/kg	290	50.0	04/25/02 12:44	BCK	87-61-6		
1,2,4-Trichlorobenzene	4600	ug/kg	290	50.0	04/25/02 12:44	BCK	120-82-1		
1,1,1-Trichloroethane	ND	ug/kg	5.9	1.0	04/25/02 12:44	BCK	71-55-6		
1,1,2-Trichloroethane	12.	ug/kg	5.9	1.0	04/25/02 12:44	BCK	79-00-5		
Trichloroethene	660	ug/kg	290	50.0	04/25/02 12:44	BCK	79-01-6		
Trichlorofluoromethane	ND	ug/kg	5.9	1.0	04/25/02 12:44	BCK	75-69-4		
1,2,3-Trichloropropane	ND	ug/kg	5.9	1.0	04/25/02 12:44	BCK	96-18-4		
1,2,4-Trimethylbenzene	ND	ug/kg	5.9	1.0	04/25/02 12:44	BCK	95-63-6		
1,3,5-Trimethylbenzene	ND	ug/kg	5.9	1.0	04/25/02 12:44	BCK	108-67-8		
Vinyl chloride	ND	ug/kg	12.	1.0	04/25/02 12:44	BCK	75-01-4		
m&p-Xylene	160	ug/kg	12.	1.0	04/25/02 12:44	BCK			
o-Xylene	99.	ug/kg	5.9	1.0	04/25/02 12:44	BCK	95-47-6		
Toluene-d8 (S)	101	%		1.0	04/25/02 12:44	BCK	2037-26-5		
4-Bromofluorobenzene (S)	100	%		1.0	04/25/02 12:44	BCK	460-00-4		
Dibromofluoromethane (S)	87	%		1.0	04/25/02 12:44	BCK			
1,2-Dichloroethane-d4 (S)	81	%		1.0	04/25/02 12:44	BCK	17060-07-0		

Laboratory Certification IDs
NC Wastewater 12
NC Drinking Water 37706
SC 99006

REPORT OF LABORATORY ANALYSIS
This report shall not be reproduced, except in full,
without the written consent of Pace Analytical Services, Inc.

Laboratory Certification IDs
LA Wastewater 04034
VA Drinking Water 213
FL NELAP E87627

Pace Analytical™
www.pacelabs.com

Pace Analytical Services, Inc.
9800 Kincey Avenue, Suite 100
Huntersville, NC 28078
Phone: 704.875.9092
Fax: 704.875.9091

Lab Project Number: 9232215
Client Project ID: NC101047.0002/Worth

Lab Sample No: 922218706 Project Sample Number: 9232215-011 Date Collected: 04/18/02 16:30
Client Sample ID: GP-32(2-4') Matrix: Soil Date Received: 04/20/02 09:45

Parameters	Results	Units	Report Limit	Dilution	Analyzed	by	CAS No.	Ftnote	Reg Limit
Wet Chemistry									
Percent Moisture	Method: % Moisture								
Percent Moisture	14.1	%		0.9	04/22/02	BYH			
GC/MS Volatiles									
GC/MS VOCs by 8260, low level	Prep/Method: EPA 8260 / EPA 8260								
Acetone	350	ug/kg	120	1.0	04/27/02 01:46	BCK	67-64-1		
Benzene	ND	ug/kg	5.8	1.0	04/27/02 01:46	BCK	71-43-2		
Bromobenzene	ND	ug/kg	5.8	1.0	04/27/02 01:46	BCK	108-86-1		
Bromochloromethane	ND	ug/kg	5.8	1.0	04/27/02 01:46	BCK	74-97-5		
Bromodichloromethane	ND	ug/kg	5.8	1.0	04/27/02 01:46	BCK	75-27-4		
Bromoform	ND	ug/kg	5.8	1.0	04/27/02 01:46	BCK	75-25-2		
Bromomethane	ND	ug/kg	12.	1.0	04/27/02 01:46	BCK	74-83-9		
2-Butanone (MEK)	ND	ug/kg	120	1.0	04/27/02 01:46	BCK	78-93-3		
n-Butylbenzene	ND	ug/kg	5.8	1.0	04/27/02 01:46	BCK	104-51-8		
sec-Butylbenzene	ND	ug/kg	5.8	1.0	04/27/02 01:46	BCK	135-98-8		
tert-Butylbenzene	ND	ug/kg	5.8	1.0	04/27/02 01:46	BCK	98-06-6		
Carbon disulfide	ND	ug/kg	5.8	1.0	04/27/02 01:46	BCK	75-15-0		
Carbon tetrachloride	ND	ug/kg	5.8	1.0	04/27/02 01:46	BCK	56-23-5		
Chlorobenzene	ND	ug/kg	5.8	1.0	04/27/02 01:46	BCK	108-90-7		
Chloroethane	ND	ug/kg	12.	1.0	04/27/02 01:46	BCK	75-00-3		
Chloroform	ND	ug/kg	5.8	1.0	04/27/02 01:46	BCK	67-66-3		
Chloromethane	ND	ug/kg	12.	1.0	04/27/02 01:46	BCK	74-87-3		
2-Chlorotoluene	ND	ug/kg	5.8	1.0	04/27/02 01:46	BCK	95-49-8		
4-Chlorotoluene	ND	ug/kg	5.8	1.0	04/27/02 01:46	BCK	106-43-4		
1,2-Dibromo-3-chloropropane	ND	ug/kg	5.8	1.0	04/27/02 01:46	BCK	96-12-8		
Dibromochloromethane	ND	ug/kg	5.8	1.0	04/27/02 01:46	BCK	124-48-1		
1,2-Dibromoethane (EDB)	ND	ug/kg	5.8	1.0	04/27/02 01:46	BCK	106-93-4		
Dibromomethane	ND	ug/kg	5.8	1.0	04/27/02 01:46	BCK	74-95-3		
1,2-Dichlorobenzene	22.	ug/kg	5.8	1.0	04/27/02 01:46	BCK	95-50-1		
1,3-Dichlorobenzene	ND	ug/kg	5.8	1.0	04/27/02 01:46	BCK	541-73-1		
1,4-Dichlorobenzene	ND	ug/kg	5.8	1.0	04/27/02 01:46	BCK	106-46-7		
Dichlorodifluoromethane	ND	ug/kg	12.	1.0	04/27/02 01:46	BCK	75-71-8		
1,1-Dichloroethane	ND	ug/kg	5.8	1.0	04/27/02 01:46	BCK	75-34-3		
1,2-Dichloroethane	ND	ug/kg	5.8	1.0	04/27/02 01:46	BCK	107-06-2		
1,1-Dichloroethene	ND	ug/kg	5.8	1.0	04/27/02 01:46	BCK	75-35-4		
cis-1,2-Dichloroethene	ND	ug/kg	5.8	1.0	04/27/02 01:46	BCK	156-59-2		
trans-1,2-Dichloroethene	ND	ug/kg	5.8	1.0	04/27/02 01:46	BCK	156-60-5		

Laboratory Certification IDs
NC Wastewater 12
NC Drinking Water 37706
SC 99006

REPORT OF LABORATORY ANALYSIS
This report shall not be reproduced, except in full,
without the written consent of Pace Analytical Services, Inc.

Laboratory Certification IDs
LA Wastewater 04034
VA Drinking Water 213
FL NELAP E87627

Pace Analytical™
www.pacelabs.com

Pace Analytical Services, Inc.
9800 Kincey Avenue, Suite 100
Huntersville, NC 28078
Phone: 704.875.9092
Fax: 704.875.9091

Lab Project Number: 9232215
Client Project ID: NC101047.0002/Worth

Lab Sample No: 922218706 Project Sample Number: 9232215-011 Date Collected: 04/18/02 16:30
Client Sample ID: GP-32(2-4') Matrix: Soil Date Received: 04/20/02 09:45

Parameters	Results	Units	Report Limit	Dilution	Analyzed	by	CAS No.	Ftnote	Reg Limit
1,2-Dichloropropane	ND	ug/kg	5.8	1.0	04/27/02 01:46	BCK	78-87-5		
1,3-Dichloropropane	ND	ug/kg	5.8	1.0	04/27/02 01:46	BCK	142-28-9		
2,2-Dichloropropane	ND	ug/kg	5.8	1.0	04/27/02 01:46	BCK	594-20-7		
1,1-Dichloropropene	ND	ug/kg	5.8	1.0	04/27/02 01:46	BCK	563-58-6		
Diisopropyl ether	ND	ug/kg	5.8	1.0	04/27/02 01:46	BCK	108-20-3		
Ethylbenzene	ND	ug/kg	5.8	1.0	04/27/02 01:46	BCK	100-41-4		
Hexachloro-1,3-butadiene	ND	ug/kg	5.8	1.0	04/27/02 01:46	BCK	87-68-3		
Isopropylbenzene (Cumene)	ND	ug/kg	5.8	1.0	04/27/02 01:46	BCK	98-82-8		
p-Isopropyltoluene	ND	ug/kg	5.8	1.0	04/27/02 01:46	BCK	99-87-6		
Methylene chloride	ND	ug/kg	5.8	1.0	04/27/02 01:46	BCK	75-09-2		
4-Methyl-2-pentanone (MIBK)	78.	ug/kg	58.	1.0	04/27/02 01:46	BCK	108-10-1		
Methyl-tert-butyl ether	ND	ug/kg	5.8	1.0	04/27/02 01:46	BCK	1634-04-4		
Naphthalene	ND	ug/kg	5.8	1.0	04/27/02 01:46	BCK	91-20-3		
n-Propylbenzene	ND	ug/kg	5.8	1.0	04/27/02 01:46	BCK	103-65-1		
Styrene	ND	ug/kg	5.8	1.0	04/27/02 01:46	BCK	100-42-5		
1,1,1,2-Tetrachloroethane	ND	ug/kg	5.8	1.0	04/27/02 01:46	BCK	630-20-6		
1,1,2,2-Tetrachloroethane	ND	ug/kg	5.8	1.0	04/27/02 01:46	BCK	79-34-5		
Tetrachloroethene	7.9	ug/kg	5.8	1.0	04/27/02 01:46	BCK	127-18-4		
Tetrahydrofuran	ND	ug/kg	58.	1.0	04/27/02 01:46	BCK	109-99-9		
Toluene	ND	ug/kg	5.8	1.0	04/27/02 01:46	BCK	108-88-3		
1,2,3-Trichlorobenzene	110	ug/kg	5.8	1.0	04/27/02 01:46	BCK	87-61-6		
1,2,4-Trichlorobenzene	270	ug/kg	5.8	1.0	04/27/02 01:46	BCK	120-82-1	1	
1,1,1-Trichloroethane	ND	ug/kg	5.8	1.0	04/27/02 01:46	BCK	71-55-6		
1,1,2-Trichloroethane	ND	ug/kg	5.8	1.0	04/27/02 01:46	BCK	79-00-5		
Trichloroethene	9.8	ug/kg	5.8	1.0	04/27/02 01:46	BCK	79-01-6		
Trichlorofluoromethane	ND	ug/kg	5.8	1.0	04/27/02 01:46	BCK	75-69-4		
1,2,3-Trichloropropane	ND	ug/kg	5.8	1.0	04/27/02 01:46	BCK	96-18-4		
1,2,4-Trimethylbenzene	ND	ug/kg	5.8	1.0	04/27/02 01:46	BCK	95-63-6		
1,3,5-Trimethylbenzene	ND	ug/kg	5.8	1.0	04/27/02 01:46	BCK	108-67-8		
Vinyl chloride	ND	ug/kg	12.	1.0	04/27/02 01:46	BCK	75-01-4		
m&p-Xylene	ND	ug/kg	12.	1.0	04/27/02 01:46	BCK			
o-Xylene	ND	ug/kg	5.8	1.0	04/27/02 01:46	BCK	95-47-6		
Toluene-d8 (S)	99	%		1.0	04/27/02 01:46	BCK	2037-26-5		
4-Bromofluorobenzene (S)	96	%		1.0	04/27/02 01:46	BCK	460-00-4		
Dibromofluoromethane (S)	100	%		1.0	04/27/02 01:46	BCK			
1,2-Dichloroethane-d4 (S)	103	%		1.0	04/27/02 01:46	BCK	17060-07-0		

Laboratory Certification IDs
NC Wastewater 12
NC Drinking Water 37706
SC 99006

REPORT OF LABORATORY ANALYSIS
This report shall not be reproduced, except in full,
without the written consent of Pace Analytical Services, Inc.

Laboratory Certification IDs
LA Wastewater 04034
VA Drinking Water 213
FL NELAP E87627

Pace Analytical™
www.pacelabs.com

Pace Analytical Services, Inc.
9800 Kincey Avenue, Suite 100
Huntersville, NC 28078
Phone: 704.875.9092
Fax: 704.875.9091

Lab Project Number: 9232215
Client Project ID: NC101047.0002/Worth

Lab Sample No: 922218714 Project Sample Number: 9232215-012 Date Collected: 04/18/02 16:10
Client Sample ID: GP-33(2-4') Matrix: Soil Date Received: 04/20/02 09:45

Parameters	Results	Units	Report Limit	Dilution	Analyzed	by	CAS No.	Ftnote	Reg Limit
Wet Chemistry									
Percent Moisture	Method: % Moisture								
Percent Moisture	19.9	%		0.8	04/22/02	BYH			
GC/MS Volatiles									
GC/MS VOCs by 8260, low level	Prep/Method: EPA 8260 / EPA 8260								
Acetone	ND	ug/kg	120	1.0	04/27/02 02:17	BCK	67-64-1		
Benzene	ND	ug/kg	6.2	1.0	04/27/02 02:17	BCK	71-43-2		
Bromobenzene	ND	ug/kg	6.2	1.0	04/27/02 02:17	BCK	108-86-1		
Bromochloromethane	ND	ug/kg	6.2	1.0	04/27/02 02:17	BCK	74-97-5		
Bromodichloromethane	ND	ug/kg	6.2	1.0	04/27/02 02:17	BCK	75-27-4		
Bromoform	ND	ug/kg	6.2	1.0	04/27/02 02:17	BCK	75-25-2		
Bromomethane	ND	ug/kg	12.	1.0	04/27/02 02:17	BCK	74-83-9		
2-Butanone (MEK)	ND	ug/kg	120	1.0	04/27/02 02:17	BCK	78-93-3		
n-Butylbenzene	ND	ug/kg	6.2	1.0	04/27/02 02:17	BCK	104-51-8		
sec-Butylbenzene	ND	ug/kg	6.2	1.0	04/27/02 02:17	BCK	135-98-8		
tert-Butylbenzene	ND	ug/kg	6.2	1.0	04/27/02 02:17	BCK	98-06-6		
Carbon disulfide	ND	ug/kg	6.2	1.0	04/27/02 02:17	BCK	75-15-0		
Carbon tetrachloride	ND	ug/kg	6.2	1.0	04/27/02 02:17	BCK	56-23-5		
Chlorobenzene	ND	ug/kg	6.2	1.0	04/27/02 02:17	BCK	108-90-7		
Chloroethane	ND	ug/kg	12.	1.0	04/27/02 02:17	BCK	75-00-3		
Chloroform	ND	ug/kg	6.2	1.0	04/27/02 02:17	BCK	67-66-3		
Chloromethane	ND	ug/kg	12.	1.0	04/27/02 02:17	BCK	74-87-3		
2-Chlorotoluene	ND	ug/kg	6.2	1.0	04/27/02 02:17	BCK	95-49-8		
4-Chlorotoluene	ND	ug/kg	6.2	1.0	04/27/02 02:17	BCK	106-43-4		
1,2-Dibromo-3-chloropropane	ND	ug/kg	6.2	1.0	04/27/02 02:17	BCK	96-12-8		
Dibromochloromethane	ND	ug/kg	6.2	1.0	04/27/02 02:17	BCK	124-48-1		
1,2-Dibromoethane (EDB)	ND	ug/kg	6.2	1.0	04/27/02 02:17	BCK	106-93-4		
Dibromomethane	ND	ug/kg	6.2	1.0	04/27/02 02:17	BCK	74-95-3		
1,2-Dichlorobenzene	ND	ug/kg	6.2	1.0	04/27/02 02:17	BCK	95-50-1		
1,3-Dichlorobenzene	ND	ug/kg	6.2	1.0	04/27/02 02:17	BCK	541-73-1		
1,4-Dichlorobenzene	ND	ug/kg	6.2	1.0	04/27/02 02:17	BCK	106-46-7		
Dichlorodifluoromethane	ND	ug/kg	12.	1.0	04/27/02 02:17	BCK	75-71-8		
1,1-Dichloroethane	ND	ug/kg	6.2	1.0	04/27/02 02:17	BCK	75-34-3		
1,2-Dichloroethane	ND	ug/kg	6.2	1.0	04/27/02 02:17	BCK	107-06-2		
1,1-Dichloroethene	ND	ug/kg	6.2	1.0	04/27/02 02:17	BCK	75-35-4		
cis-1,2-Dichloroethene	ND	ug/kg	6.2	1.0	04/27/02 02:17	BCK	156-59-2		
trans-1,2-Dichloroethene	ND	ug/kg	6.2	1.0	04/27/02 02:17	BCK	156-60-5		

Laboratory Certification IDs
NC Wastewater 12
NC Drinking Water 37706
SC 99006

REPORT OF LABORATORY ANALYSIS
This report shall not be reproduced, except in full,
without the written consent of Pace Analytical Services, Inc.

Laboratory Certification IDs
LA Wastewater 04034
VA Drinking Water 213
FL NELAP E87627

Pace Analytical™
www.pacelabs.com

Pace Analytical Services, Inc.
9800 Kincey Avenue, Suite 100
Huntersville, NC 28078
Phone: 704.875.9092
Fax: 704.875.9091

Lab Project Number: 9232215
Client Project ID: NC101047.0002/Worth

Lab Sample No: 922218714 Project Sample Number: 9232215-012 Date Collected: 04/18/02 16:10
Client Sample ID: GP-33(2-4') Matrix: Soil Date Received: 04/20/02 09:45

Parameters	Results	Units	Report Limit	Dilution	Analyzed	by	CAS No.	Ftnote	Reg Limit
1,2-Dichloropropane	ND	ug/kg	6.2	1.0	04/27/02 02:17	BCK	78-87-5		
1,3-Dichloropropane	ND	ug/kg	6.2	1.0	04/27/02 02:17	BCK	142-28-9		
2,2-Dichloropropane	ND	ug/kg	6.2	1.0	04/27/02 02:17	BCK	594-20-7		
1,1-Dichloropropene	ND	ug/kg	6.2	1.0	04/27/02 02:17	BCK	563-58-6		
Diisopropyl ether	ND	ug/kg	6.2	1.0	04/27/02 02:17	BCK	108-20-3		
Ethylbenzene	ND	ug/kg	6.2	1.0	04/27/02 02:17	BCK	100-41-4		
Hexachloro-1,3-butadiene	ND	ug/kg	6.2	1.0	04/27/02 02:17	BCK	87-68-3		
Isopropylbenzene (Cumene)	ND	ug/kg	6.2	1.0	04/27/02 02:17	BCK	98-82-8		
p-Isopropyltoluene	ND	ug/kg	6.2	1.0	04/27/02 02:17	BCK	99-87-6		
Methylene chloride	7.8	ug/kg	6.2	1.0	04/27/02 02:17	BCK	75-09-2	2	
4-Methyl-2-pentanone (MIBK)	ND	ug/kg	62.	1.0	04/27/02 02:17	BCK	108-10-1		
Methyl-tert-butyl ether	ND	ug/kg	6.2	1.0	04/27/02 02:17	BCK	1634-04-4		
Naphthalene	ND	ug/kg	6.2	1.0	04/27/02 02:17	BCK	91-20-3		
n-Propylbenzene	ND	ug/kg	6.2	1.0	04/27/02 02:17	BCK	103-65-1		
Styrene	ND	ug/kg	6.2	1.0	04/27/02 02:17	BCK	100-42-5		
1,1,1,2-Tetrachloroethane	ND	ug/kg	6.2	1.0	04/27/02 02:17	BCK	630-20-6		
1,1,2,2-Tetrachloroethane	ND	ug/kg	6.2	1.0	04/27/02 02:17	BCK	79-34-5		
Tetrachloroethene	19.	ug/kg	6.2	1.0	04/27/02 02:17	BCK	127-18-4		
Tetrahydrofuran	ND	ug/kg	62.	1.0	04/27/02 02:17	BCK	109-99-9		
Toluene	ND	ug/kg	6.2	1.0	04/27/02 02:17	BCK	108-88-3		
1,2,3-Trichlorobenzene	7.9	ug/kg	6.2	1.0	04/27/02 02:17	BCK	87-61-6		
1,2,4-Trichlorobenzene	12.	ug/kg	6.2	1.0	04/27/02 02:17	BCK	120-82-1		
1,1,1-Trichloroethane	ND	ug/kg	6.2	1.0	04/27/02 02:17	BCK	71-55-6		
1,1,2-Trichloroethane	ND	ug/kg	6.2	1.0	04/27/02 02:17	BCK	79-00-5		
Trichloroethene	20.	ug/kg	6.2	1.0	04/27/02 02:17	BCK	79-01-6		
Trichlorofluoromethane	ND	ug/kg	6.2	1.0	04/27/02 02:17	BCK	75-69-4		
1,2,3-Trichloropropane	ND	ug/kg	6.2	1.0	04/27/02 02:17	BCK	96-18-4		
1,2,4-Trimethylbenzene	ND	ug/kg	6.2	1.0	04/27/02 02:17	BCK	95-63-6		
1,3,5-Trimethylbenzene	ND	ug/kg	6.2	1.0	04/27/02 02:17	BCK	108-67-8		
Vinyl chloride	ND	ug/kg	12.	1.0	04/27/02 02:17	BCK	75-01-4		
m&p-Xylene	ND	ug/kg	12.	1.0	04/27/02 02:17	BCK			
o-Xylene	ND	ug/kg	6.2	1.0	04/27/02 02:17	BCK	95-47-6		
Toluene-d8 (S)	98	%		1.0	04/27/02 02:17	BCK	2037-26-5		
4-Bromofluorobenzene (S)	81	%		1.0	04/27/02 02:17	BCK	460-00-4		
Dibromofluoromethane (S)	107	%		1.0	04/27/02 02:17	BCK			
1,2-Dichloroethane-d4 (S)	104	%		1.0	04/27/02 02:17	BCK	17060-07-0		

Laboratory Certification IDs
NC Wastewater 12
NC Drinking Water 37706
SC 99006

REPORT OF LABORATORY ANALYSIS
This report shall not be reproduced, except in full,
without the written consent of Pace Analytical Services, Inc.

Laboratory Certification IDs
LA Wastewater 04034
VA Drinking Water 213
FL NELAP E87627

Pace Analytical™
www.pacelabs.com

Pace Analytical Services, Inc.
9800 Kincey Avenue, Suite 100
Huntersville, NC 28078
Phone: 704.875.9092
Fax: 704.875.9091

Lab Project Number: 9232215
Client Project ID: NC101047.0002/Worth

Lab Sample No: 922218722 Project Sample Number: 9232215-013 Date Collected: 04/19/02 08:15
Client Sample ID: GP-34(2-4') Matrix: Soil Date Received: 04/20/02 09:45

Parameters	Results	Units	Report Limit	Dilution	Analyzed	by	CAS No.	Ftnote	Reg Limit
Wet Chemistry									
Percent Moisture	Method: % Moisture								
Percent Moisture	14.6	%		0.9	04/22/02	BYH			
GC/MS Volatiles									
GC/MS VOCs by 8260, low level	Prep/Method: EPA 8260 / EPA 8260								
Acetone	ND	ug/kg	120	1.0	04/25/02 14:44	BCK	67-64-1		
Benzene	ND	ug/kg	5.9	1.0	04/25/02 14:44	BCK	71-43-2		
Bromobenzene	ND	ug/kg	5.9	1.0	04/25/02 14:44	BCK	108-86-1		
Bromochloromethane	ND	ug/kg	5.9	1.0	04/25/02 14:44	BCK	74-97-5		
Bromodichloromethane	ND	ug/kg	5.9	1.0	04/25/02 14:44	BCK	75-27-4		
Bromoform	ND	ug/kg	5.9	1.0	04/25/02 14:44	BCK	75-25-2		
Bromomethane	ND	ug/kg	12.	1.0	04/25/02 14:44	BCK	74-83-9		
2-Butanone (MEK)	ND	ug/kg	120	1.0	04/25/02 14:44	BCK	78-93-3		
n-Butylbenzene	ND	ug/kg	5.9	1.0	04/25/02 14:44	BCK	104-51-8		
sec-Butylbenzene	ND	ug/kg	5.9	1.0	04/25/02 14:44	BCK	135-98-8		
tert-Butylbenzene	ND	ug/kg	5.9	1.0	04/25/02 14:44	BCK	98-06-6		
Carbon disulfide	73.	ug/kg	5.9	1.0	04/25/02 14:44	BCK	75-15-0		
Carbon tetrachloride	ND	ug/kg	5.9	1.0	04/25/02 14:44	BCK	56-23-5		
Chlorobenzene	ND	ug/kg	5.9	1.0	04/25/02 14:44	BCK	108-90-7		
Chloroethane	ND	ug/kg	12.	1.0	04/25/02 14:44	BCK	75-00-3		
Chloroform	ND	ug/kg	5.9	1.0	04/25/02 14:44	BCK	67-66-3		
Chloromethane	ND	ug/kg	12.	1.0	04/25/02 14:44	BCK	74-87-3		
2-Chlorotoluene	ND	ug/kg	5.9	1.0	04/25/02 14:44	BCK	95-49-8		
4-Chlorotoluene	ND	ug/kg	5.9	1.0	04/25/02 14:44	BCK	106-43-4		
1,2-Dibromo-3-chloropropane	ND	ug/kg	5.9	1.0	04/25/02 14:44	BCK	96-12-8		
Dibromochloromethane	ND	ug/kg	5.9	1.0	04/25/02 14:44	BCK	124-48-1		
1,2-Dibromoethane (EDB)	ND	ug/kg	5.9	1.0	04/25/02 14:44	BCK	106-93-4		
Dibromomethane	ND	ug/kg	5.9	1.0	04/25/02 14:44	BCK	74-95-3		
1,2-Dichlorobenzene	ND	ug/kg	5.9	1.0	04/25/02 14:44	BCK	95-50-1		
1,3-Dichlorobenzene	ND	ug/kg	5.9	1.0	04/25/02 14:44	BCK	541-73-1		
1,4-Dichlorobenzene	ND	ug/kg	5.9	1.0	04/25/02 14:44	BCK	106-46-7		
Dichlorodifluoromethane	ND	ug/kg	12.	1.0	04/25/02 14:44	BCK	75-71-8		
1,1-Dichloroethane	ND	ug/kg	5.9	1.0	04/25/02 14:44	BCK	75-34-3		
1,2-Dichloroethane	ND	ug/kg	5.9	1.0	04/25/02 14:44	BCK	107-06-2		
1,1-Dichloroethene	ND	ug/kg	5.9	1.0	04/25/02 14:44	BCK	75-35-4		
cis-1,2-Dichloroethene	62.	ug/kg	5.9	1.0	04/25/02 14:44	BCK	156-59-2		
trans-1,2-Dichloroethene	ND	ug/kg	5.9	1.0	04/25/02 14:44	BCK	156-60-5		

Laboratory Certification IDs
NC Wastewater 12
NC Drinking Water 37706
SC 99006

REPORT OF LABORATORY ANALYSIS
This report shall not be reproduced, except in full,
without the written consent of Pace Analytical Services, Inc.

Laboratory Certification IDs
LA Wastewater 04034
VA Drinking Water 213
FL NELAP E87627

Pace Analytical™
www.pacelabs.com

Pace Analytical Services, Inc.
9800 Kincey Avenue, Suite 100
Huntersville, NC 28078
Phone: 704.875.9092
Fax: 704.875.9091

Lab Project Number: 9232215
Client Project ID: NC101047.0002/Worth

Lab Sample No: 922218722 Project Sample Number: 9232215-013 Date Collected: 04/19/02 08:15
Client Sample ID: GP-34(2-4') Matrix: Soil Date Received: 04/20/02 09:45

Parameters	Results	Units	Report Limit	Dilution	Analyzed	by	CAS No.	Ftnote	Reg Limit
1,2-Dichloropropane	ND	ug/kg	5.9	1.0	04/25/02 14:44	BCK	78-87-5		
1,3-Dichloropropane	ND	ug/kg	5.9	1.0	04/25/02 14:44	BCK	142-28-9		
2,2-Dichloropropane	ND	ug/kg	5.9	1.0	04/25/02 14:44	BCK	594-20-7		
1,1-Dichloropropene	ND	ug/kg	5.9	1.0	04/25/02 14:44	BCK	563-58-6		
Diisopropyl ether	ND	ug/kg	5.9	1.0	04/25/02 14:44	BCK	108-20-3		
Ethylbenzene	ND	ug/kg	5.9	1.0	04/25/02 14:44	BCK	100-41-4		
Hexachloro-1,3-butadiene	ND	ug/kg	5.9	1.0	04/25/02 14:44	BCK	87-68-3		
Isopropylbenzene (Cumene)	ND	ug/kg	5.9	1.0	04/25/02 14:44	BCK	98-82-8		
p-Isopropyltoluene	ND	ug/kg	5.9	1.0	04/25/02 14:44	BCK	99-87-6		
Methylene chloride	7.1	ug/kg	5.9	1.0	04/25/02 14:44	BCK	75-09-2	2	
4-Methyl-2-pentanone (MIBK)	ND	ug/kg	59.	1.0	04/25/02 14:44	BCK	108-10-1		
Methyl-tert-butyl ether	ND	ug/kg	5.9	1.0	04/25/02 14:44	BCK	1634-04-4		
Naphthalene	ND	ug/kg	5.9	1.0	04/25/02 14:44	BCK	91-20-3		
n-Propylbenzene	ND	ug/kg	5.9	1.0	04/25/02 14:44	BCK	103-65-1		
Styrene	ND	ug/kg	5.9	1.0	04/25/02 14:44	BCK	100-42-5		
1,1,1,2-Tetrachloroethane	ND	ug/kg	5.9	1.0	04/25/02 14:44	BCK	630-20-6		
1,1,2,2-Tetrachloroethane	ND	ug/kg	5.9	1.0	04/25/02 14:44	BCK	79-34-5		
Tetrachloroethene	890	ug/kg	5.9	1.0	04/25/02 14:44	BCK	127-18-4	1	
Tetrahydrofuran	ND	ug/kg	59.	1.0	04/25/02 14:44	BCK	109-99-9		
Toluene	8.4	ug/kg	5.9	1.0	04/25/02 14:44	BCK	108-88-3		
1,2,3-Trichlorobenzene	7.8	ug/kg	5.9	1.0	04/25/02 14:44	BCK	87-61-6		
1,2,4-Trichlorobenzene	ND	ug/kg	5.9	1.0	04/25/02 14:44	BCK	120-82-1		
1,1,1-Trichloroethane	ND	ug/kg	5.9	1.0	04/25/02 14:44	BCK	71-55-6		
1,1,2-Trichloroethane	ND	ug/kg	5.9	1.0	04/25/02 14:44	BCK	79-00-5		
Trichloroethene	35.	ug/kg	5.9	1.0	04/25/02 14:44	BCK	79-01-6		
Trichlorofluoromethane	ND	ug/kg	5.9	1.0	04/25/02 14:44	BCK	75-69-4		
1,2,3-Trichloropropane	ND	ug/kg	5.9	1.0	04/25/02 14:44	BCK	96-18-4		
1,2,4-Trimethylbenzene	ND	ug/kg	5.9	1.0	04/25/02 14:44	BCK	95-63-6		
1,3,5-Trimethylbenzene	ND	ug/kg	5.9	1.0	04/25/02 14:44	BCK	108-67-8		
Vinyl chloride	ND	ug/kg	12.	1.0	04/25/02 14:44	BCK	75-01-4		
m&p-Xylene	ND	ug/kg	12.	1.0	04/25/02 14:44	BCK			
o-Xylene	ND	ug/kg	5.9	1.0	04/25/02 14:44	BCK	95-47-6		
Toluene-d8 (S)	100	%		1.0	04/25/02 14:44	BCK	2037-26-5		
4-Bromofluorobenzene (S)	84	%		1.0	04/25/02 14:44	BCK	460-00-4		
Dibromofluoromethane (S)	94	%		1.0	04/25/02 14:44	BCK			
1,2-Dichloroethane-d4 (S)	88	%		1.0	04/25/02 14:44	BCK	17060-07-0		

Laboratory Certification IDs
NC Wastewater 12
NC Drinking Water 37706
SC 99006

REPORT OF LABORATORY ANALYSIS
This report shall not be reproduced, except in full,
without the written consent of Pace Analytical Services, Inc.

Laboratory Certification IDs
LA Wastewater 04034
VA Drinking Water 213
FL NELAP E87627

Pace Analytical™
www.pacelabs.com

Pace Analytical Services, Inc.
9800 Kincey Avenue, Suite 100
Huntersville, NC 28078
Phone: 704.875.9092
Fax: 704.875.9091

Lab Project Number: 9232215
Client Project ID: NC101047.0002/Worth

Lab Sample No: 922218730 Project Sample Number: 9232215-014 Date Collected: 04/19/02 08:35
Client Sample ID: GP-35(5.5-6.5') Matrix: Soil Date Received: 04/20/02 09:45

Parameters	Results	Units	Report Limit	Dilution	Analyzed	by	CAS No.	Ftnote	Reg Limit
Wet Chemistry									
Percent Moisture	Method: % Moisture								
Percent Moisture	16.3	%		0.8	04/22/02	BYH			
GC/MS Volatiles									
GC/MS VOCs by 8260, low level	Prep/Method: EPA 8260 / EPA 8260								
Acetone	ND	ug/kg	120	1.0	04/27/02 02:48	BCK	67-64-1		
Benzene	ND	ug/kg	6.0	1.0	04/27/02 02:48	BCK	71-43-2		
Bromobenzene	ND	ug/kg	6.0	1.0	04/27/02 02:48	BCK	108-86-1		
Bromochloromethane	ND	ug/kg	6.0	1.0	04/27/02 02:48	BCK	74-97-5		
Bromodichloromethane	ND	ug/kg	6.0	1.0	04/27/02 02:48	BCK	75-27-4		
Bromoform	ND	ug/kg	6.0	1.0	04/27/02 02:48	BCK	75-25-2		
Bromomethane	ND	ug/kg	12.	1.0	04/27/02 02:48	BCK	74-83-9		
2-Butanone (MEK)	ND	ug/kg	120	1.0	04/27/02 02:48	BCK	78-93-3		
n-Butylbenzene	ND	ug/kg	6.0	1.0	04/27/02 02:48	BCK	104-51-8		
sec-Butylbenzene	ND	ug/kg	6.0	1.0	04/27/02 02:48	BCK	135-98-8		
tert-Butylbenzene	ND	ug/kg	6.0	1.0	04/27/02 02:48	BCK	98-06-6		
Carbon disulfide	ND	ug/kg	6.0	1.0	04/27/02 02:48	BCK	75-15-0		
Carbon tetrachloride	ND	ug/kg	6.0	1.0	04/27/02 02:48	BCK	56-23-5		
Chlorobenzene	ND	ug/kg	6.0	1.0	04/27/02 02:48	BCK	108-90-7		
Chloroethane	ND	ug/kg	12.	1.0	04/27/02 02:48	BCK	75-00-3		
Chloroform	ND	ug/kg	6.0	1.0	04/27/02 02:48	BCK	67-66-3		
Chloromethane	ND	ug/kg	12.	1.0	04/27/02 02:48	BCK	74-87-3		
2-Chlorotoluene	ND	ug/kg	6.0	1.0	04/27/02 02:48	BCK	95-49-8		
4-Chlorotoluene	ND	ug/kg	6.0	1.0	04/27/02 02:48	BCK	106-43-4		
1,2-Dibromo-3-chloropropane	ND	ug/kg	6.0	1.0	04/27/02 02:48	BCK	96-12-8		
Dibromochloromethane	ND	ug/kg	6.0	1.0	04/27/02 02:48	BCK	124-48-1		
1,2-Dibromoethane (EDB)	ND	ug/kg	6.0	1.0	04/27/02 02:48	BCK	106-93-4		
Dibromomethane	ND	ug/kg	6.0	1.0	04/27/02 02:48	BCK	74-95-3		
1,2-Dichlorobenzene	ND	ug/kg	6.0	1.0	04/27/02 02:48	BCK	95-50-1		
1,3-Dichlorobenzene	ND	ug/kg	6.0	1.0	04/27/02 02:48	BCK	541-73-1		
1,4-Dichlorobenzene	ND	ug/kg	6.0	1.0	04/27/02 02:48	BCK	106-46-7		
Dichlorodifluoromethane	ND	ug/kg	12.	1.0	04/27/02 02:48	BCK	75-71-8		
1,1-Dichloroethane	ND	ug/kg	6.0	1.0	04/27/02 02:48	BCK	75-34-3		
1,2-Dichloroethane	ND	ug/kg	6.0	1.0	04/27/02 02:48	BCK	107-06-2		
1,1-Dichloroethene	ND	ug/kg	6.0	1.0	04/27/02 02:48	BCK	75-35-4		
cis-1,2-Dichloroethene	ND	ug/kg	6.0	1.0	04/27/02 02:48	BCK	156-59-2		
trans-1,2-Dichloroethene	ND	ug/kg	6.0	1.0	04/27/02 02:48	BCK	156-60-5		

Laboratory Certification IDs
NC Wastewater 12
NC Drinking Water 37706
SC 99006

REPORT OF LABORATORY ANALYSIS
This report shall not be reproduced, except in full,
without the written consent of Pace Analytical Services, Inc.

Laboratory Certification IDs
LA Wastewater 04034
VA Drinking Water 213
FL NELAP E87627

Pace Analytical™
www.pacelabs.com

Pace Analytical Services, Inc.
9800 Kincey Avenue, Suite 100
Huntersville, NC 28078
Phone: 704.875.9092
Fax: 704.875.9091

Lab Project Number: 9232215
Client Project ID: NC101047.0002/Worth

Lab Sample No: 922218730 Project Sample Number: 9232215-014 Date Collected: 04/19/02 08:35
Client Sample ID: GP-35(5.5-6.5') Matrix: Soil Date Received: 04/20/02 09:45

Parameters	Results	Units	Report Limit	Dilution	Analyzed	by	CAS No.	Ftnote	Reg Limit
1,2-Dichloropropane	ND	ug/kg	6.0	1.0	04/27/02 02:48	BCK	78-87-5		
1,3-Dichloropropane	ND	ug/kg	6.0	1.0	04/27/02 02:48	BCK	142-28-9		
2,2-Dichloropropane	ND	ug/kg	6.0	1.0	04/27/02 02:48	BCK	594-20-7		
1,1-Dichloropropene	ND	ug/kg	6.0	1.0	04/27/02 02:48	BCK	563-58-6		
Diisopropyl ether	ND	ug/kg	6.0	1.0	04/27/02 02:48	BCK	108-20-3		
Ethylbenzene	ND	ug/kg	6.0	1.0	04/27/02 02:48	BCK	100-41-4		
Hexachloro-1,3-butadiene	ND	ug/kg	6.0	1.0	04/27/02 02:48	BCK	87-68-3		
Isopropylbenzene (Cumene)	ND	ug/kg	6.0	1.0	04/27/02 02:48	BCK	98-82-8		
p-Isopropyltoluene	ND	ug/kg	6.0	1.0	04/27/02 02:48	BCK	99-87-6		
Methylene chloride	7.4	ug/kg	6.0	1.0	04/27/02 02:48	BCK	75-09-2	2	
4-Methyl-2-pentanone (MIBK)	ND	ug/kg	60.	1.0	04/27/02 02:48	BCK	108-10-1		
Methyl-tert-butyl ether	ND	ug/kg	6.0	1.0	04/27/02 02:48	BCK	1634-04-4		
Naphthalene	ND	ug/kg	6.0	1.0	04/27/02 02:48	BCK	91-20-3		
n-Propylbenzene	ND	ug/kg	6.0	1.0	04/27/02 02:48	BCK	103-65-1		
Styrene	ND	ug/kg	6.0	1.0	04/27/02 02:48	BCK	100-42-5		
1,1,1,2-Tetrachloroethane	ND	ug/kg	6.0	1.0	04/27/02 02:48	BCK	630-20-6		
1,1,2,2-Tetrachloroethane	ND	ug/kg	6.0	1.0	04/27/02 02:48	BCK	79-34-5		
Tetrachloroethene	26.	ug/kg	6.0	1.0	04/27/02 02:48	BCK	127-18-4		
Tetrahydrofuran	ND	ug/kg	60.	1.0	04/27/02 02:48	BCK	109-99-9		
Toluene	ND	ug/kg	6.0	1.0	04/27/02 02:48	BCK	108-88-3		
1,2,3-Trichlorobenzene	ND	ug/kg	6.0	1.0	04/27/02 02:48	BCK	87-61-6		
1,2,4-Trichlorobenzene	ND	ug/kg	6.0	1.0	04/27/02 02:48	BCK	120-82-1		
1,1,1-Trichloroethane	ND	ug/kg	6.0	1.0	04/27/02 02:48	BCK	71-55-6		
1,1,2-Trichloroethane	ND	ug/kg	6.0	1.0	04/27/02 02:48	BCK	79-00-5		
Trichloroethene	19.	ug/kg	6.0	1.0	04/27/02 02:48	BCK	79-01-6		
Trichlorofluoromethane	ND	ug/kg	6.0	1.0	04/27/02 02:48	BCK	75-69-4		
1,2,3-Trichloropropane	ND	ug/kg	6.0	1.0	04/27/02 02:48	BCK	96-18-4		
1,2,4-Trimethylbenzene	ND	ug/kg	6.0	1.0	04/27/02 02:48	BCK	95-63-6		
1,3,5-Trimethylbenzene	ND	ug/kg	6.0	1.0	04/27/02 02:48	BCK	108-67-8		
Vinyl chloride	ND	ug/kg	12.	1.0	04/27/02 02:48	BCK	75-01-4		
m&p-Xylene	ND	ug/kg	12.	1.0	04/27/02 02:48	BCK			
o-Xylene	ND	ug/kg	6.0	1.0	04/27/02 02:48	BCK	95-47-6		
Toluene-d8 (S)	98	%		1.0	04/27/02 02:48	BCK	2037-26-5		
4-Bromofluorobenzene (S)	90	%		1.0	04/27/02 02:48	BCK	460-00-4		
Dibromofluoromethane (S)	102	%		1.0	04/27/02 02:48	BCK			
1,2-Dichloroethane-d4 (S)	105	%		1.0	04/27/02 02:48	BCK	17060-07-0		

Laboratory Certification IDs
NC Wastewater 12
NC Drinking Water 37706
SC 99006

REPORT OF LABORATORY ANALYSIS
This report shall not be reproduced, except in full,
without the written consent of Pace Analytical Services, Inc.

Laboratory Certification IDs
LA Wastewater 04034
VA Drinking Water 213
FL NELAP E87627

Pace Analytical™
www.pacelabs.com

Pace Analytical Services, Inc.
9800 Kincey Avenue, Suite 100
Huntersville, NC 28078
Phone: 704.875.9092
Fax: 704.875.9091

Lab Project Number: 9232215
Client Project ID: NC101047.0002/Worth

Lab Sample No: 922218748 Project Sample Number: 9232215-015 Date Collected: 04/19/02 08:50
Client Sample ID: GP-36(2-4') Matrix: Soil Date Received: 04/20/02 09:45

Parameters	Results	Units	Report Limit	Dilution	Analyzed	by	CAS No.	Ftnote	Reg Limit
Wet Chemistry									
Percent Moisture	Method: % Moisture								
Percent Moisture	20.1	%		0.8	04/22/02	BYH			
GC/MS Volatiles									
GC/MS VOCs by 8260, low level	Prep/Method: EPA 8260 / EPA 8260								
Acetone	ND	ug/kg	130	1.0	04/25/02 15:44	BCK	67-64-1		
Benzene	ND	ug/kg	6.3	1.0	04/25/02 15:44	BCK	71-43-2		
Bromobenzene	ND	ug/kg	6.3	1.0	04/25/02 15:44	BCK	108-86-1		
Bromochloromethane	ND	ug/kg	6.3	1.0	04/25/02 15:44	BCK	74-97-5		
Bromodichloromethane	ND	ug/kg	6.3	1.0	04/25/02 15:44	BCK	75-27-4		
Bromoform	ND	ug/kg	6.3	1.0	04/25/02 15:44	BCK	75-25-2		
Bromomethane	ND	ug/kg	13.	1.0	04/25/02 15:44	BCK	74-83-9		
2-Butanone (MEK)	ND	ug/kg	130	1.0	04/25/02 15:44	BCK	78-93-3		
n-Butylbenzene	ND	ug/kg	6.3	1.0	04/25/02 15:44	BCK	104-51-8		
sec-Butylbenzene	ND	ug/kg	6.3	1.0	04/25/02 15:44	BCK	135-98-8		
tert-Butylbenzene	ND	ug/kg	6.3	1.0	04/25/02 15:44	BCK	98-06-6		
Carbon disulfide	ND	ug/kg	6.3	1.0	04/25/02 15:44	BCK	75-15-0		
Carbon tetrachloride	ND	ug/kg	6.3	1.0	04/25/02 15:44	BCK	56-23-5		
Chlorobenzene	ND	ug/kg	6.3	1.0	04/25/02 15:44	BCK	108-90-7		
Chloroethane	ND	ug/kg	13.	1.0	04/25/02 15:44	BCK	75-00-3		
Chloroform	ND	ug/kg	6.3	1.0	04/25/02 15:44	BCK	67-66-3		
Chloromethane	ND	ug/kg	13.	1.0	04/25/02 15:44	BCK	74-87-3		
2-Chlorotoluene	ND	ug/kg	6.3	1.0	04/25/02 15:44	BCK	95-49-8		
4-Chlorotoluene	ND	ug/kg	6.3	1.0	04/25/02 15:44	BCK	106-43-4		
1,2-Dibromo-3-chloropropane	ND	ug/kg	6.3	1.0	04/25/02 15:44	BCK	96-12-8		
Dibromochloromethane	ND	ug/kg	6.3	1.0	04/25/02 15:44	BCK	124-48-1		
1,2-Dibromoethane (EDB)	ND	ug/kg	6.3	1.0	04/25/02 15:44	BCK	106-93-4		
Dibromomethane	ND	ug/kg	6.3	1.0	04/25/02 15:44	BCK	74-95-3		
1,2-Dichlorobenzene	ND	ug/kg	6.3	1.0	04/25/02 15:44	BCK	95-50-1		
1,3-Dichlorobenzene	ND	ug/kg	6.3	1.0	04/25/02 15:44	BCK	541-73-1		
1,4-Dichlorobenzene	ND	ug/kg	6.3	1.0	04/25/02 15:44	BCK	106-46-7		
Dichlorodifluoromethane	ND	ug/kg	13.	1.0	04/25/02 15:44	BCK	75-71-8		
1,1-Dichloroethane	ND	ug/kg	6.3	1.0	04/25/02 15:44	BCK	75-34-3		
1,2-Dichloroethane	ND	ug/kg	6.3	1.0	04/25/02 15:44	BCK	107-06-2		
1,1-Dichloroethene	ND	ug/kg	6.3	1.0	04/25/02 15:44	BCK	75-35-4		
cis-1,2-Dichloroethene	ND	ug/kg	6.3	1.0	04/25/02 15:44	BCK	156-59-2		
trans-1,2-Dichloroethene	ND	ug/kg	6.3	1.0	04/25/02 15:44	BCK	156-60-5		

Laboratory Certification IDs
NC Wastewater 12
NC Drinking Water 37706
SC 99006

REPORT OF LABORATORY ANALYSIS
This report shall not be reproduced, except in full,
without the written consent of Pace Analytical Services, Inc.

Laboratory Certification IDs
LA Wastewater 04034
VA Drinking Water 213
FL NELAP E87627

Pace Analytical™
www.pacelabs.com

Pace Analytical Services, Inc.
9800 Kincey Avenue, Suite 100
Huntersville, NC 28078
Phone: 704.875.9092
Fax: 704.875.9091

Lab Project Number: 9232215
Client Project ID: NC101047.0002/Worth

Lab Sample No: 922218748 Project Sample Number: 9232215-015 Date Collected: 04/19/02 08:50
Client Sample ID: GP-36(2-4') Matrix: Soil Date Received: 04/20/02 09:45

Parameters	Results	Units	Report Limit	Dilution	Analyzed	by	CAS No.	Ftnote	Reg Limit
1,2-Dichloropropane	ND	ug/kg	6.3	1.0	04/25/02 15:44	BCK	78-87-5		
1,3-Dichloropropane	ND	ug/kg	6.3	1.0	04/25/02 15:44	BCK	142-28-9		
2,2-Dichloropropane	ND	ug/kg	6.3	1.0	04/25/02 15:44	BCK	594-20-7		
1,1-Dichloropropene	ND	ug/kg	6.3	1.0	04/25/02 15:44	BCK	563-58-6		
Diisopropyl ether	ND	ug/kg	6.3	1.0	04/25/02 15:44	BCK	108-20-3		
Ethylbenzene	ND	ug/kg	6.3	1.0	04/25/02 15:44	BCK	100-41-4		
Hexachloro-1,3-butadiene	ND	ug/kg	6.3	1.0	04/25/02 15:44	BCK	87-68-3		
Isopropylbenzene (Cumene)	ND	ug/kg	6.3	1.0	04/25/02 15:44	BCK	98-82-8		
p-Isopropyltoluene	ND	ug/kg	6.3	1.0	04/25/02 15:44	BCK	99-87-6		
Methylene chloride	11.	ug/kg	6.3	1.0	04/25/02 15:44	BCK	75-09-2	2	
4-Methyl-2-pentanone (MIBK)	ND	ug/kg	63.	1.0	04/25/02 15:44	BCK	108-10-1		
Methyl-tert-butyl ether	ND	ug/kg	6.3	1.0	04/25/02 15:44	BCK	1634-04-4		
Naphthalene	ND	ug/kg	6.3	1.0	04/25/02 15:44	BCK	91-20-3		
n-Propylbenzene	ND	ug/kg	6.3	1.0	04/25/02 15:44	BCK	103-65-1		
Styrene	ND	ug/kg	6.3	1.0	04/25/02 15:44	BCK	100-42-5		
1,1,1,2-Tetrachloroethane	ND	ug/kg	6.3	1.0	04/25/02 15:44	BCK	630-20-6		
1,1,2,2-Tetrachloroethane	ND	ug/kg	6.3	1.0	04/25/02 15:44	BCK	79-34-5		
Tetrachloroethene	9.5	ug/kg	6.3	1.0	04/25/02 15:44	BCK	127-18-4		
Tetrahydrofuran	ND	ug/kg	63.	1.0	04/25/02 15:44	BCK	109-99-9		
Toluene	ND	ug/kg	6.3	1.0	04/25/02 15:44	BCK	108-88-3		
1,2,3-Trichlorobenzene	ND	ug/kg	6.3	1.0	04/25/02 15:44	BCK	87-61-6		
1,2,4-Trichlorobenzene	ND	ug/kg	6.3	1.0	04/25/02 15:44	BCK	120-82-1		
1,1,1-Trichloroethane	ND	ug/kg	6.3	1.0	04/25/02 15:44	BCK	71-55-6		
1,1,2-Trichloroethane	14.	ug/kg	6.3	1.0	04/25/02 15:44	BCK	79-00-5		
Trichloroethene	29.	ug/kg	6.3	1.0	04/25/02 15:44	BCK	79-01-6		
Trichlorofluoromethane	ND	ug/kg	6.3	1.0	04/25/02 15:44	BCK	75-69-4		
1,2,3-Trichloropropane	ND	ug/kg	6.3	1.0	04/25/02 15:44	BCK	96-18-4		
1,2,4-Trimethylbenzene	ND	ug/kg	6.3	1.0	04/25/02 15:44	BCK	95-63-6		
1,3,5-Trimethylbenzene	ND	ug/kg	6.3	1.0	04/25/02 15:44	BCK	108-67-8		
Vinyl chloride	ND	ug/kg	13.	1.0	04/25/02 15:44	BCK	75-01-4		
m&p-Xylene	ND	ug/kg	13.	1.0	04/25/02 15:44	BCK			
o-Xylene	ND	ug/kg	6.3	1.0	04/25/02 15:44	BCK	95-47-6		
Toluene-d8 (S)	100	%		1.0	04/25/02 15:44	BCK	2037-26-5		
4-Bromofluorobenzene (S)	84	%		1.0	04/25/02 15:44	BCK	460-00-4		
Dibromofluoromethane (S)	94	%		1.0	04/25/02 15:44	BCK			
1,2-Dichloroethane-d4 (S)	78	%		1.0	04/25/02 15:44	BCK	17060-07-0		

Laboratory Certification IDs
NC Wastewater 12
NC Drinking Water 37706
SC 99006

REPORT OF LABORATORY ANALYSIS
This report shall not be reproduced, except in full,
without the written consent of Pace Analytical Services, Inc.

Laboratory Certification IDs
LA Wastewater 04034
VA Drinking Water 213
FL NELAP E87627

Pace Analytical™
www.pacelabs.com

Pace Analytical Services, Inc.
9800 Kincey Avenue, Suite 100
Huntersville, NC 28078
Phone: 704.875.9092
Fax: 704.875.9091

Lab Project Number: 9232215
Client Project ID: NC101047.0002/Worth

Lab Sample No: 922218755 Project Sample Number: 9232215-016 Date Collected: 04/19/02 10:00
Client Sample ID: GP-37(4-5.5') Matrix: Soil Date Received: 04/20/02 09:45

Parameters	Results	Units	Report Limit	Dilution	Analyzed	by	CAS No.	Ftnote	Reg Limit
Wet Chemistry									
Percent Moisture	Method: % Moisture								
Percent Moisture	12.7	%		0.9	04/22/02	BYH			
GC/MS Volatiles									
GC/MS VOCs by 8260, low level	Prep/Method: EPA 8260 / EPA 8260								
Acetone	200	ug/kg	110	1.0	04/25/02 16:15	BCK	67-64-1		
Benzene	ND	ug/kg	5.7	1.0	04/25/02 16:15	BCK	71-43-2		
Bromobenzene	ND	ug/kg	5.7	1.0	04/25/02 16:15	BCK	108-86-1		
Bromochloromethane	ND	ug/kg	5.7	1.0	04/25/02 16:15	BCK	74-97-5		
Bromodichloromethane	ND	ug/kg	5.7	1.0	04/25/02 16:15	BCK	75-27-4		
Bromoform	ND	ug/kg	5.7	1.0	04/25/02 16:15	BCK	75-25-2		
Bromomethane	ND	ug/kg	11.	1.0	04/25/02 16:15	BCK	74-83-9		
2-Butanone (MEK)	ND	ug/kg	110	1.0	04/25/02 16:15	BCK	78-93-3		
n-Butylbenzene	ND	ug/kg	5.7	1.0	04/25/02 16:15	BCK	104-51-8		
sec-Butylbenzene	ND	ug/kg	5.7	1.0	04/25/02 16:15	BCK	135-98-8		
tert-Butylbenzene	ND	ug/kg	5.7	1.0	04/25/02 16:15	BCK	98-06-6		
Carbon disulfide	ND	ug/kg	5.7	1.0	04/25/02 16:15	BCK	75-15-0		
Carbon tetrachloride	ND	ug/kg	5.7	1.0	04/25/02 16:15	BCK	56-23-5		
Chlorobenzene	ND	ug/kg	5.7	1.0	04/25/02 16:15	BCK	108-90-7		
Chloroethane	ND	ug/kg	11.	1.0	04/25/02 16:15	BCK	75-00-3		
Chloroform	ND	ug/kg	5.7	1.0	04/25/02 16:15	BCK	67-66-3		
Chloromethane	ND	ug/kg	11.	1.0	04/25/02 16:15	BCK	74-87-3		
2-Chlorotoluene	ND	ug/kg	5.7	1.0	04/25/02 16:15	BCK	95-49-8		
4-Chlorotoluene	ND	ug/kg	5.7	1.0	04/25/02 16:15	BCK	106-43-4		
1,2-Dibromo-3-chloropropane	ND	ug/kg	5.7	1.0	04/25/02 16:15	BCK	96-12-8		
Dibromochloromethane	ND	ug/kg	5.7	1.0	04/25/02 16:15	BCK	124-48-1		
1,2-Dibromoethane (EDB)	ND	ug/kg	5.7	1.0	04/25/02 16:15	BCK	106-93-4		
Dibromomethane	ND	ug/kg	5.7	1.0	04/25/02 16:15	BCK	74-95-3		
1,2-Dichlorobenzene	ND	ug/kg	5.7	1.0	04/25/02 16:15	BCK	95-50-1		
1,3-Dichlorobenzene	ND	ug/kg	5.7	1.0	04/25/02 16:15	BCK	541-73-1		
1,4-Dichlorobenzene	ND	ug/kg	5.7	1.0	04/25/02 16:15	BCK	106-46-7		
Dichlorodifluoromethane	ND	ug/kg	11.	1.0	04/25/02 16:15	BCK	75-71-8		
1,1-Dichloroethane	ND	ug/kg	5.7	1.0	04/25/02 16:15	BCK	75-34-3		
1,2-Dichloroethane	ND	ug/kg	5.7	1.0	04/25/02 16:15	BCK	107-06-2		
1,1-Dichloroethene	ND	ug/kg	5.7	1.0	04/25/02 16:15	BCK	75-35-4		
cis-1,2-Dichloroethene	ND	ug/kg	5.7	1.0	04/25/02 16:15	BCK	156-59-2		
trans-1,2-Dichloroethene	ND	ug/kg	5.7	1.0	04/25/02 16:15	BCK	156-60-5		

Laboratory Certification IDs
NC Wastewater 12
NC Drinking Water 37706
SC 99006

REPORT OF LABORATORY ANALYSIS
This report shall not be reproduced, except in full,
without the written consent of Pace Analytical Services, Inc.

Laboratory Certification IDs
LA Wastewater 04034
VA Drinking Water 213
FL NELAP E87627

Pace Analytical™
www.pacelabs.com

Pace Analytical Services, Inc.
9800 Kincey Avenue, Suite 100
Huntersville, NC 28078
Phone: 704.875.9092
Fax: 704.875.9091

Lab Project Number: 9232215
Client Project ID: NC101047.0002/Worth

Lab Sample No: 922218755 Project Sample Number: 9232215-016 Date Collected: 04/19/02 10:00
Client Sample ID: GP-37(4-5.5') Matrix: Soil Date Received: 04/20/02 09:45

Parameters	Results	Units	Report Limit	Dilution	Analyzed	by	CAS No.	Ftnote	Reg Limit
1,2-Dichloropropane	ND	ug/kg	5.7	1.0	04/25/02 16:15	BCK	78-87-5		
1,3-Dichloropropane	ND	ug/kg	5.7	1.0	04/25/02 16:15	BCK	142-28-9		
2,2-Dichloropropane	ND	ug/kg	5.7	1.0	04/25/02 16:15	BCK	594-20-7		
1,1-Dichloropropene	ND	ug/kg	5.7	1.0	04/25/02 16:15	BCK	563-58-6		
Diisopropyl ether	ND	ug/kg	5.7	1.0	04/25/02 16:15	BCK	108-20-3		
Ethylbenzene	ND	ug/kg	5.7	1.0	04/25/02 16:15	BCK	100-41-4		
Hexachloro-1,3-butadiene	ND	ug/kg	5.7	1.0	04/25/02 16:15	BCK	87-68-3		
Isopropylbenzene (Cumene)	ND	ug/kg	5.7	1.0	04/25/02 16:15	BCK	98-82-8		
p-Isopropyltoluene	ND	ug/kg	5.7	1.0	04/25/02 16:15	BCK	99-87-6		
Methylene chloride	8.7	ug/kg	5.7	1.0	04/25/02 16:15	BCK	75-09-2	2	
4-Methyl-2-pentanone (MIBK)	ND	ug/kg	57.	1.0	04/25/02 16:15	BCK	108-10-1		
Methyl-tert-butyl ether	ND	ug/kg	5.7	1.0	04/25/02 16:15	BCK	1634-04-4		
Naphthalene	ND	ug/kg	5.7	1.0	04/25/02 16:15	BCK	91-20-3		
n-Propylbenzene	ND	ug/kg	5.7	1.0	04/25/02 16:15	BCK	103-65-1		
Styrene	ND	ug/kg	5.7	1.0	04/25/02 16:15	BCK	100-42-5		
1,1,1,2-Tetrachloroethane	ND	ug/kg	5.7	1.0	04/25/02 16:15	BCK	630-20-6		
1,1,2,2-Tetrachloroethane	ND	ug/kg	5.7	1.0	04/25/02 16:15	BCK	79-34-5		
Tetrachloroethene	270	ug/kg	5.7	1.0	04/25/02 16:15	BCK	127-18-4	1	
Tetrahydrofuran	ND	ug/kg	57.	1.0	04/25/02 16:15	BCK	109-99-9		
Toluene	7.7	ug/kg	5.7	1.0	04/25/02 16:15	BCK	108-88-3		
1,2,3-Trichlorobenzene	ND	ug/kg	5.7	1.0	04/25/02 16:15	BCK	87-61-6		
1,2,4-Trichlorobenzene	ND	ug/kg	5.7	1.0	04/25/02 16:15	BCK	120-82-1		
1,1,1-Trichloroethane	ND	ug/kg	5.7	1.0	04/25/02 16:15	BCK	71-55-6		
1,1,2-Trichloroethane	9.0	ug/kg	5.7	1.0	04/25/02 16:15	BCK	79-00-5		
Trichloroethene	21.	ug/kg	5.7	1.0	04/25/02 16:15	BCK	79-01-6		
Trichlorofluoromethane	ND	ug/kg	5.7	1.0	04/25/02 16:15	BCK	75-69-4		
1,2,3-Trichloropropane	ND	ug/kg	5.7	1.0	04/25/02 16:15	BCK	96-18-4		
1,2,4-Trimethylbenzene	ND	ug/kg	5.7	1.0	04/25/02 16:15	BCK	95-63-6		
1,3,5-Trimethylbenzene	6.2	ug/kg	5.7	1.0	04/25/02 16:15	BCK	108-67-8		
Vinyl chloride	ND	ug/kg	11.	1.0	04/25/02 16:15	BCK	75-01-4		
m&p-Xylene	11.	ug/kg	11.	1.0	04/25/02 16:15	BCK			
o-Xylene	ND	ug/kg	5.7	1.0	04/25/02 16:15	BCK	95-47-6		
Toluene-d8 (S)	102	%		1.0	04/25/02 16:15	BCK	2037-26-5		
4-Bromofluorobenzene (S)	90	%		1.0	04/25/02 16:15	BCK	460-00-4		
Dibromofluoromethane (S)	94	%		1.0	04/25/02 16:15	BCK			
1,2-Dichloroethane-d4 (S)	87	%		1.0	04/25/02 16:15	BCK	17060-07-0		

Laboratory Certification IDs
NC Wastewater 12
NC Drinking Water 37706
SC 99006

REPORT OF LABORATORY ANALYSIS
This report shall not be reproduced, except in full,
without the written consent of Pace Analytical Services, Inc.

Laboratory Certification IDs
LA Wastewater 04034
VA Drinking Water 213
FL NELAP E87627

Pace Analytical™
www.pacelabs.com

Pace Analytical Services, Inc.
9800 Kincey Avenue, Suite 100
Huntersville, NC 28078
Phone: 704.875.9092
Fax: 704.875.9091

Lab Project Number: 9232215
Client Project ID: NC101047.0002/Worth

Lab Sample No: 922218763 Project Sample Number: 9232215-017 Date Collected: 04/19/02 09:40
Client Sample ID: GP-38(4-5.5') Matrix: Soil Date Received: 04/20/02 09:45

Parameters	Results	Units	Report Limit	Dilution	Analyzed	by	CAS No.	Ftnote	Reg Limit
Wet Chemistry									
Percent Moisture	Method: % Moisture								
Percent Moisture	14.1	%		0.9	04/22/02	BYH			
GC/MS Volatiles									
GC/MS VOCs by 8260, low level	Prep/Method: EPA 8260 / EPA 8260								
Acetone	220	ug/kg	120	1.0	04/26/02 01:41	BCK	67-64-1		
Benzene	ND	ug/kg	5.8	1.0	04/26/02 01:41	BCK	71-43-2		
Bromobenzene	ND	ug/kg	5.8	1.0	04/26/02 01:41	BCK	108-86-1		
Bromochloromethane	ND	ug/kg	5.8	1.0	04/26/02 01:41	BCK	74-97-5		
Bromodichloromethane	ND	ug/kg	5.8	1.0	04/26/02 01:41	BCK	75-27-4		
Bromoform	ND	ug/kg	2900	500	04/26/02 01:41	BCK	75-25-2		
Bromomethane	ND	ug/kg	12.	1.0	04/26/02 01:41	BCK	74-83-9		
2-Butanone (MEK)	ND	ug/kg	120	1.0	04/26/02 01:41	BCK	78-93-3		
n-Butylbenzene	65.	ug/kg	5.8	1.0	04/26/02 01:41	BCK	104-51-8		
sec-Butylbenzene	ND	ug/kg	5.8	1.0	04/26/02 01:41	BCK	135-98-8		
tert-Butylbenzene	ND	ug/kg	5.8	1.0	04/26/02 01:41	BCK	98-06-6		
Carbon disulfide	ND	ug/kg	5.8	1.0	04/26/02 01:41	BCK	75-15-0		
Carbon tetrachloride	9.6	ug/kg	5.8	1.0	04/26/02 01:41	BCK	56-23-5		
Chlorobenzene	15.	ug/kg	5.8	1.0	04/26/02 01:41	BCK	108-90-7		
Chloroethane	ND	ug/kg	12.	1.0	04/26/02 01:41	BCK	75-00-3		
Chloroform	28.	ug/kg	5.8	1.0	04/26/02 01:41	BCK	67-66-3		
Chloromethane	ND	ug/kg	12.	1.0	04/26/02 01:41	BCK	74-87-3		
2-Chlorotoluene	ND	ug/kg	5.8	1.0	04/26/02 01:41	BCK	95-49-8		
4-Chlorotoluene	ND	ug/kg	5.8	1.0	04/26/02 01:41	BCK	106-43-4		
1,2-Dibromo-3-chloropropane	ND	ug/kg	5.8	1.0	04/26/02 01:41	BCK	96-12-8		
Dibromochloromethane	ND	ug/kg	5.8	1.0	04/26/02 01:41	BCK	124-48-1		
1,2-Dibromoethane (EDB)	ND	ug/kg	5.8	1.0	04/26/02 01:41	BCK	106-93-4		
Dibromomethane	ND	ug/kg	5.8	1.0	04/26/02 01:41	BCK	74-95-3		
1,2-Dichlorobenzene	ND	ug/kg	5.8	1.0	04/26/02 01:41	BCK	95-50-1		
1,3-Dichlorobenzene	ND	ug/kg	5.8	1.0	04/26/02 01:41	BCK	541-73-1		
1,4-Dichlorobenzene	ND	ug/kg	5.8	1.0	04/26/02 01:41	BCK	106-46-7		
Dichlorodifluoromethane	ND	ug/kg	12.	1.0	04/26/02 01:41	BCK	75-71-8		
1,1-Dichloroethane	ND	ug/kg	5.8	1.0	04/26/02 01:41	BCK	75-34-3		
1,2-Dichloroethane	ND	ug/kg	5.8	1.0	04/26/02 01:41	BCK	107-06-2		
1,1-Dichloroethene	ND	ug/kg	5.8	1.0	04/26/02 01:41	BCK	75-35-4		
cis-1,2-Dichloroethene	ND	ug/kg	5.8	1.0	04/26/02 01:41	BCK	156-59-2		
trans-1,2-Dichloroethene	ND	ug/kg	5.8	1.0	04/26/02 01:41	BCK	156-60-5		

Laboratory Certification IDs
NC Wastewater 12
NC Drinking Water 37706
SC 99006

REPORT OF LABORATORY ANALYSIS
This report shall not be reproduced, except in full,
without the written consent of Pace Analytical Services, Inc.

Laboratory Certification IDs
LA Wastewater 04034
VA Drinking Water 213
FL NELAP E87627

Pace Analytical™
www.pacelabs.com

Pace Analytical Services, Inc.
9800 Kincey Avenue, Suite 100
Huntersville, NC 28078
Phone: 704.875.9092
Fax: 704.875.9091

Lab Project Number: 9232215
Client Project ID: NC101047.0002/Worth

Lab Sample No: 922218763 Project Sample Number: 9232215-017 Date Collected: 04/19/02 09:40
Client Sample ID: GP-38(4-5.5') Matrix: Soil Date Received: 04/20/02 09:45

Parameters	Results	Units	Report Limit	Dilution	Analyzed	by	CAS No.	Ftnote	Reg Limit
1,2-Dichloropropane	ND	ug/kg	5.8	1.0	04/26/02 01:41	BCK	78-87-5		
1,3-Dichloropropane	ND	ug/kg	5.8	1.0	04/26/02 01:41	BCK	142-28-9		
2,2-Dichloropropane	ND	ug/kg	5.8	1.0	04/26/02 01:41	BCK	594-20-7		
1,1-Dichloropropene	ND	ug/kg	5.8	1.0	04/26/02 01:41	BCK	563-58-6		
Diisopropyl ether	ND	ug/kg	5.8	1.0	04/26/02 01:41	BCK	108-20-3		
Ethylbenzene	87.	ug/kg	5.8	1.0	04/26/02 01:41	BCK	100-41-4		
Hexachloro-1,3-butadiene	ND	ug/kg	5.8	1.0	04/26/02 01:41	BCK	87-68-3		
Isopropylbenzene (Cumene)	20.	ug/kg	5.8	1.0	04/26/02 01:41	BCK	98-82-8		
p-Isopropyltoluene	57.	ug/kg	5.8	1.0	04/26/02 01:41	BCK	99-87-6		
Methylene chloride	6.2	ug/kg	5.8	1.0	04/26/02 01:41	BCK	75-09-2	2	
4-Methyl-2-pentanone (MIBK)	ND	ug/kg	58.	1.0	04/26/02 01:41	BCK	108-10-1		
Methyl-tert-butyl ether	ND	ug/kg	5.8	1.0	04/26/02 01:41	BCK	1634-04-4		
Naphthalene	200	ug/kg	5.8	1.0	04/26/02 01:41	BCK	91-20-3		
n-Propylbenzene	36.	ug/kg	5.8	1.0	04/26/02 01:41	BCK	103-65-1		
Styrene	ND	ug/kg	5.8	1.0	04/26/02 01:41	BCK	100-42-5		
1,1,1,2-Tetrachloroethane	19.	ug/kg	5.8	1.0	04/26/02 01:41	BCK	630-20-6		
1,1,2,2-Tetrachloroethane	ND	ug/kg	5.8	1.0	04/26/02 01:41	BCK	79-34-5		
Tetrachloroethene	55000	ug/kg	2900	500	04/26/02 01:41	BCK	127-18-4		
Tetrahydrofuran	ND	ug/kg	58.	1.0	04/26/02 01:41	BCK	109-99-9		
Toluene	1000	ug/kg	5.8	1.0	04/26/02 01:41	BCK	108-88-3	1	
1,2,3-Trichlorobenzene	ND	ug/kg	5.8	1.0	04/26/02 01:41	BCK	87-61-6		
1,2,4-Trichlorobenzene	ND	ug/kg	5.8	1.0	04/26/02 01:41	BCK	120-82-1		
1,1,1-Trichloroethane	110	ug/kg	5.8	1.0	04/26/02 01:41	BCK	71-55-6		
1,1,2-Trichloroethane	16.	ug/kg	5.8	1.0	04/26/02 01:41	BCK	79-00-5		
Trichloroethene	13000	ug/kg	2900	500	04/26/02 01:41	BCK	79-01-6		
Trichlorofluoromethane	ND	ug/kg	5.8	1.0	04/26/02 01:41	BCK	75-69-4		
1,2,3-Trichloropropane	ND	ug/kg	5.8	1.0	04/26/02 01:41	BCK	96-18-4		
1,2,4-Trimethylbenzene	370	ug/kg	5.8	1.0	04/26/02 01:41	BCK	95-63-6	1	
1,3,5-Trimethylbenzene	140	ug/kg	5.8	1.0	04/26/02 01:41	BCK	108-67-8		
Vinyl chloride	ND	ug/kg	12.	1.0	04/26/02 01:41	BCK	75-01-4		
m&p-Xylene	330	ug/kg	12.	1.0	04/26/02 01:41	BCK			
o-Xylene	110	ug/kg	5.8	1.0	04/26/02 01:41	BCK	95-47-6		
Toluene-d8 (S)	98	%		1.0	04/26/02 01:41	BCK	2037-26-5		
4-Bromofluorobenzene (S)	135	%		1.0	04/26/02 01:41	BCK	460-00-4		
Dibromofluoromethane (S)	84	%		1.0	04/26/02 01:41	BCK			
1,2-Dichloroethane-d4 (S)	78	%		1.0	04/26/02 01:41	BCK	17060-07-0		

Laboratory Certification IDs
NC Wastewater 12
NC Drinking Water 37706
SC 99006

REPORT OF LABORATORY ANALYSIS
This report shall not be reproduced, except in full,
without the written consent of Pace Analytical Services, Inc.

Laboratory Certification IDs
LA Wastewater 04034
VA Drinking Water 213
FL NELAP E87627

Pace Analytical™
www.pacelabs.com

Pace Analytical Services, Inc.
9800 Kincey Avenue, Suite 100
Huntersville, NC 28078
Phone: 704.875.9092
Fax: 704.875.9091

Lab Project Number: 9232215
Client Project ID: NC101047.0002/Worth

Lab Sample No: 922218771 Project Sample Number: 9232215-018 Date Collected: 04/19/02 09:40
Client Sample ID: GP-38(7-8') Matrix: Soil Date Received: 04/20/02 09:45

Parameters	Results	Units	Report Limit	Dilution	Analyzed	by	CAS No.	Ftnote	Reg Limit
Wet Chemistry									
Percent Moisture	Method: % Moisture								
Percent Moisture	8.5	%		0.9	04/22/02	BYH			
GC/MS Volatiles									
GC/MS VOCs by 8260, low level	Prep/Method: EPA 8260 / EPA 8260								
Acetone	ND	ug/kg	5500	50.0	04/27/02 03:19	BCK	67-64-1		
Benzene	ND	ug/kg	5.5	1.0	04/27/02 03:19	BCK	71-43-2		
Bromobenzene	ND	ug/kg	5.5	1.0	04/27/02 03:19	BCK	108-86-1		
Bromochloromethane	ND	ug/kg	5.5	1.0	04/27/02 03:19	BCK	74-97-5		
Bromodichloromethane	ND	ug/kg	5.5	1.0	04/27/02 03:19	BCK	75-27-4		
Bromoform	ND	ug/kg	5.5	1.0	04/27/02 03:19	BCK	75-25-2		
Bromomethane	ND	ug/kg	11.	1.0	04/27/02 03:19	BCK	74-83-9		
2-Butanone (MEK)	ND	ug/kg	5500	50.0	04/27/02 03:19	BCK	78-93-3		
n-Butylbenzene	ND	ug/kg	5.5	1.0	04/27/02 03:19	BCK	104-51-8		
sec-Butylbenzene	ND	ug/kg	5.5	1.0	04/27/02 03:19	BCK	135-98-8		
tert-Butylbenzene	ND	ug/kg	5.5	1.0	04/27/02 03:19	BCK	98-06-6		
Carbon disulfide	ND	ug/kg	5.5	1.0	04/27/02 03:19	BCK	75-15-0		
Carbon tetrachloride	ND	ug/kg	5.5	1.0	04/27/02 03:19	BCK	56-23-5		
Chlorobenzene	ND	ug/kg	5.5	1.0	04/27/02 03:19	BCK	108-90-7		
Chloroethane	ND	ug/kg	11.	1.0	04/27/02 03:19	BCK	75-00-3		
Chloroform	ND	ug/kg	5.5	1.0	04/27/02 03:19	BCK	67-66-3		
Chloromethane	ND	ug/kg	11.	1.0	04/27/02 03:19	BCK	74-87-3		
2-Chlorotoluene	ND	ug/kg	5.5	1.0	04/27/02 03:19	BCK	95-49-8		
4-Chlorotoluene	ND	ug/kg	5.5	1.0	04/27/02 03:19	BCK	106-43-4		
1,2-Dibromo-3-chloropropane	ND	ug/kg	5.5	1.0	04/27/02 03:19	BCK	96-12-8		
Dibromochloromethane	ND	ug/kg	5.5	1.0	04/27/02 03:19	BCK	124-48-1		
1,2-Dibromoethane (EDB)	ND	ug/kg	5.5	1.0	04/27/02 03:19	BCK	106-93-4		
Dibromomethane	ND	ug/kg	5.5	1.0	04/27/02 03:19	BCK	74-95-3		
1,2-Dichlorobenzene	ND	ug/kg	5.5	1.0	04/27/02 03:19	BCK	95-50-1		
1,3-Dichlorobenzene	ND	ug/kg	5.5	1.0	04/27/02 03:19	BCK	541-73-1		
1,4-Dichlorobenzene	ND	ug/kg	5.5	1.0	04/27/02 03:19	BCK	106-46-7		
Dichlorodifluoromethane	ND	ug/kg	11.	1.0	04/27/02 03:19	BCK	75-71-8		
1,1-Dichloroethane	ND	ug/kg	5.5	1.0	04/27/02 03:19	BCK	75-34-3		
1,2-Dichloroethane	ND	ug/kg	5.5	1.0	04/27/02 03:19	BCK	107-06-2		
1,1-Dichloroethene	ND	ug/kg	5.5	1.0	04/27/02 03:19	BCK	75-35-4		
cis-1,2-Dichloroethene	ND	ug/kg	5.5	1.0	04/27/02 03:19	BCK	156-59-2		
trans-1,2-Dichloroethene	ND	ug/kg	5.5	1.0	04/27/02 03:19	BCK	156-60-5		

Laboratory Certification IDs
NC Wastewater 12
NC Drinking Water 37706
SC 99006

REPORT OF LABORATORY ANALYSIS
This report shall not be reproduced, except in full,
without the written consent of Pace Analytical Services, Inc.

Laboratory Certification IDs
LA Wastewater 04034
VA Drinking Water 213
FL NELAP E87627

Pace Analytical™
www.pacelabs.com

Pace Analytical Services, Inc.
9800 Kincey Avenue, Suite 100
Huntersville, NC 28078
Phone: 704.875.9092
Fax: 704.875.9091

Lab Project Number: 9232215
Client Project ID: NC101047.0002/Worth

Lab Sample No: 922218771 Project Sample Number: 9232215-018 Date Collected: 04/19/02 09:40
Client Sample ID: GP-38(7-8') Matrix: Soil Date Received: 04/20/02 09:45

Parameters	Results	Units	Report Limit	Dilution	Analyzed	by	CAS No.	Ftnote	Reg Limit
1,2-Dichloropropane	ND	ug/kg	5.5	1.0	04/27/02 03:19	BCK	78-87-5		
1,3-Dichloropropane	ND	ug/kg	5.5	1.0	04/27/02 03:19	BCK	142-28-9		
2,2-Dichloropropane	ND	ug/kg	5.5	1.0	04/27/02 03:19	BCK	594-20-7		
1,1-Dichloropropene	ND	ug/kg	5.5	1.0	04/27/02 03:19	BCK	563-58-6		
Diisopropyl ether	ND	ug/kg	5.5	1.0	04/27/02 03:19	BCK	108-20-3		
Ethylbenzene	ND	ug/kg	5.5	1.0	04/27/02 03:19	BCK	100-41-4		
Hexachloro-1,3-butadiene	ND	ug/kg	5.5	1.0	04/27/02 03:19	BCK	87-68-3		
Isopropylbenzene (Cumene)	ND	ug/kg	5.5	1.0	04/27/02 03:19	BCK	98-82-8		
p-Isopropyltoluene	ND	ug/kg	5.5	1.0	04/27/02 03:19	BCK	99-87-6		
Methylene chloride	ND	ug/kg	5.5	1.0	04/27/02 03:19	BCK	75-09-2		
4-Methyl-2-pentanone (MIBK)	ND	ug/kg	2700	50.0	04/27/02 03:19	BCK	108-10-1		
Methyl-tert-butyl ether	ND	ug/kg	5.5	1.0	04/27/02 03:19	BCK	1634-04-4		
Naphthalene	28.	ug/kg	5.5	1.0	04/27/02 03:19	BCK	91-20-3		
n-Propylbenzene	ND	ug/kg	5.5	1.0	04/27/02 03:19	BCK	103-65-1		
Styrene	ND	ug/kg	5.5	1.0	04/27/02 03:19	BCK	100-42-5		
1,1,1,2-Tetrachloroethane	ND	ug/kg	5.5	1.0	04/27/02 03:19	BCK	630-20-6		
1,1,2,2-Tetrachloroethane	ND	ug/kg	5.5	1.0	04/27/02 03:19	BCK	79-34-5		
Tetrachloroethene	28.	ug/kg	5.5	1.0	04/27/02 03:19	BCK	127-18-4		
Tetrahydrofuran	ND	ug/kg	55.	1.0	04/27/02 03:19	BCK	109-99-9		
Toluene	ND	ug/kg	5.5	1.0	04/27/02 03:19	BCK	108-88-3		
1,2,3-Trichlorobenzene	ND	ug/kg	5.5	1.0	04/27/02 03:19	BCK	87-61-6		
1,2,4-Trichlorobenzene	ND	ug/kg	5.5	1.0	04/27/02 03:19	BCK	120-82-1		
1,1,1-Trichloroethane	ND	ug/kg	5.5	1.0	04/27/02 03:19	BCK	71-55-6		
1,1,2-Trichloroethane	ND	ug/kg	5.5	1.0	04/27/02 03:19	BCK	79-00-5		
Trichloroethene	ND	ug/kg	5.5	1.0	04/27/02 03:19	BCK	79-01-6		
Trichlorofluoromethane	ND	ug/kg	5.5	1.0	04/27/02 03:19	BCK	75-69-4		
1,2,3-Trichloropropane	ND	ug/kg	5.5	1.0	04/27/02 03:19	BCK	96-18-4		
1,2,4-Trimethylbenzene	ND	ug/kg	5.5	1.0	04/27/02 03:19	BCK	95-63-6		
1,3,5-Trimethylbenzene	ND	ug/kg	5.5	1.0	04/27/02 03:19	BCK	108-67-8		
Vinyl chloride	ND	ug/kg	11.	1.0	04/27/02 03:19	BCK	75-01-4		
m&p-Xylene	ND	ug/kg	11.	1.0	04/27/02 03:19	BCK			
o-Xylene	ND	ug/kg	5.5	1.0	04/27/02 03:19	BCK	95-47-6		
Toluene-d8 (S)	102	%		1.0	04/27/02 03:19	BCK	2037-26-5		
4-Bromofluorobenzene (S)	91	%		1.0	04/27/02 03:19	BCK	460-00-4		
Dibromofluoromethane (S)	102	%		1.0	04/27/02 03:19	BCK			
1,2-Dichloroethane-d4 (S)	108	%		1.0	04/27/02 03:19	BCK	17060-07-0		

Laboratory Certification IDs
NC Wastewater 12
NC Drinking Water 37706
SC 99006

REPORT OF LABORATORY ANALYSIS
This report shall not be reproduced, except in full,
without the written consent of Pace Analytical Services, Inc.

Laboratory Certification IDs
LA Wastewater 04034
VA Drinking Water 213
FL NELAP E87627

Pace Analytical™
www.pacelabs.com

Pace Analytical Services, Inc.
9800 Kincey Avenue, Suite 100
Huntersville, NC 28078
Phone: 704.875.9092
Fax: 704.875.9091

Lab Project Number: 9232215
Client Project ID: NC101047.0002/Worth

Lab Sample No: 922218789 Project Sample Number: 9232215-019 Date Collected: 04/19/02 09:15
Client Sample ID: GP-39(5.5-6.5') Matrix: Soil Date Received: 04/20/02 09:45

Parameters	Results	Units	Report Limit	Dilution	Analyzed	by	CAS No.	Ftnote	Reg Limit
Wet Chemistry									
Percent Moisture	Method: % Moisture								
Percent Moisture	7.9	%		0.9	04/22/02	BYH			
GC/MS Volatiles									
GC/MS VOCs by 8260, low level	Prep/Method: EPA 8260 / EPA 8260								
Acetone	ND	ug/kg	110	1.0	04/25/02 23:37	BCK	67-64-1		
Benzene	ND	ug/kg	5.4	1.0	04/25/02 23:37	BCK	71-43-2		
Bromobenzene	ND	ug/kg	5.4	1.0	04/25/02 23:37	BCK	108-86-1		
Bromochloromethane	ND	ug/kg	5.4	1.0	04/25/02 23:37	BCK	74-97-5		
Bromodichloromethane	ND	ug/kg	5.4	1.0	04/25/02 23:37	BCK	75-27-4		
Bromoform	ND	ug/kg	5.4	1.0	04/25/02 23:37	BCK	75-25-2		
Bromomethane	ND	ug/kg	11.	1.0	04/25/02 23:37	BCK	74-83-9		
2-Butanone (MEK)	ND	ug/kg	110	1.0	04/25/02 23:37	BCK	78-93-3		
n-Butylbenzene	ND	ug/kg	5.4	1.0	04/25/02 23:37	BCK	104-51-8		
sec-Butylbenzene	ND	ug/kg	5.4	1.0	04/25/02 23:37	BCK	135-98-8		
tert-Butylbenzene	ND	ug/kg	5.4	1.0	04/25/02 23:37	BCK	98-06-6		
Carbon disulfide	ND	ug/kg	5.4	1.0	04/25/02 23:37	BCK	75-15-0		
Carbon tetrachloride	ND	ug/kg	5.4	1.0	04/25/02 23:37	BCK	56-23-5		
Chlorobenzene	ND	ug/kg	5.4	1.0	04/25/02 23:37	BCK	108-90-7		
Chloroethane	ND	ug/kg	11.	1.0	04/25/02 23:37	BCK	75-00-3		
Chloroform	ND	ug/kg	5.4	1.0	04/25/02 23:37	BCK	67-66-3		
Chloromethane	ND	ug/kg	11.	1.0	04/25/02 23:37	BCK	74-87-3		
2-Chlorotoluene	ND	ug/kg	5.4	1.0	04/25/02 23:37	BCK	95-49-8		
4-Chlorotoluene	ND	ug/kg	5.4	1.0	04/25/02 23:37	BCK	106-43-4		
1,2-Dibromo-3-chloropropane	ND	ug/kg	5.4	1.0	04/25/02 23:37	BCK	96-12-8		
Dibromochloromethane	ND	ug/kg	5.4	1.0	04/25/02 23:37	BCK	124-48-1		
1,2-Dibromoethane (EDB)	ND	ug/kg	5.4	1.0	04/25/02 23:37	BCK	106-93-4		
Dibromomethane	ND	ug/kg	5.4	1.0	04/25/02 23:37	BCK	74-95-3		
1,2-Dichlorobenzene	ND	ug/kg	5.4	1.0	04/25/02 23:37	BCK	95-50-1		
1,3-Dichlorobenzene	ND	ug/kg	5.4	1.0	04/25/02 23:37	BCK	541-73-1		
1,4-Dichlorobenzene	ND	ug/kg	5.4	1.0	04/25/02 23:37	BCK	106-46-7		
Dichlorodifluoromethane	ND	ug/kg	11.	1.0	04/25/02 23:37	BCK	75-71-8		
1,1-Dichloroethane	ND	ug/kg	5.4	1.0	04/25/02 23:37	BCK	75-34-3		
1,2-Dichloroethane	ND	ug/kg	5.4	1.0	04/25/02 23:37	BCK	107-06-2		
1,1-Dichloroethene	ND	ug/kg	5.4	1.0	04/25/02 23:37	BCK	75-35-4		
cis-1,2-Dichloroethene	ND	ug/kg	5.4	1.0	04/25/02 23:37	BCK	156-59-2		
trans-1,2-Dichloroethene	ND	ug/kg	5.4	1.0	04/25/02 23:37	BCK	156-60-5		

Laboratory Certification IDs
NC Wastewater 12
NC Drinking Water 37706
SC 99006

REPORT OF LABORATORY ANALYSIS
This report shall not be reproduced, except in full,
without the written consent of Pace Analytical Services, Inc.

Laboratory Certification IDs
LA Wastewater 04034
VA Drinking Water 213
FL NELAP E87627

Pace Analytical™
www.pacelabs.com

Pace Analytical Services, Inc.
9800 Kincey Avenue, Suite 100
Huntersville, NC 28078
Phone: 704.875.9092
Fax: 704.875.9091

Lab Project Number: 9232215
Client Project ID: NC101047.0002/Worth

Lab Sample No: 922218789 Project Sample Number: 9232215-019 Date Collected: 04/19/02 09:15
Client Sample ID: GP-39(5.5-6.5') Matrix: Soil Date Received: 04/20/02 09:45

Parameters	Results	Units	Report Limit	Dilution	Analyzed	by	CAS No.	Ftnote	Reg Limit
1,2-Dichloropropane	ND	ug/kg	5.4	1.0	04/25/02 23:37	BCK	78-87-5		
1,3-Dichloropropane	ND	ug/kg	5.4	1.0	04/25/02 23:37	BCK	142-28-9		
2,2-Dichloropropane	ND	ug/kg	5.4	1.0	04/25/02 23:37	BCK	594-20-7		
1,1-Dichloropropene	ND	ug/kg	5.4	1.0	04/25/02 23:37	BCK	563-58-6		
Diisopropyl ether	ND	ug/kg	5.4	1.0	04/25/02 23:37	BCK	108-20-3		
Ethylbenzene	ND	ug/kg	5.4	1.0	04/25/02 23:37	BCK	100-41-4		
Hexachloro-1,3-butadiene	ND	ug/kg	5.4	1.0	04/25/02 23:37	BCK	87-68-3		
Isopropylbenzene (Cumene)	ND	ug/kg	5.4	1.0	04/25/02 23:37	BCK	98-82-8		
p-Isopropyltoluene	ND	ug/kg	5.4	1.0	04/25/02 23:37	BCK	99-87-6		
Methylene chloride	5.6	ug/kg	5.4	1.0	04/25/02 23:37	BCK	75-09-2	2	
4-Methyl-2-pentanone (MIBK)	ND	ug/kg	54.	1.0	04/25/02 23:37	BCK	108-10-1		
Methyl-tert-butyl ether	ND	ug/kg	5.4	1.0	04/25/02 23:37	BCK	1634-04-4		
Naphthalene	ND	ug/kg	5.4	1.0	04/25/02 23:37	BCK	91-20-3		
n-Propylbenzene	ND	ug/kg	5.4	1.0	04/25/02 23:37	BCK	103-65-1		
Styrene	ND	ug/kg	5.4	1.0	04/25/02 23:37	BCK	100-42-5		
1,1,1,2-Tetrachloroethane	ND	ug/kg	5.4	1.0	04/25/02 23:37	BCK	630-20-6		
1,1,2,2-Tetrachloroethane	ND	ug/kg	5.4	1.0	04/25/02 23:37	BCK	79-34-5		
Tetrachloroethene	ND	ug/kg	5.4	1.0	04/25/02 23:37	BCK	127-18-4		
Tetrahydrofuran	ND	ug/kg	54.	1.0	04/25/02 23:37	BCK	109-99-9		
Toluene	ND	ug/kg	5.4	1.0	04/25/02 23:37	BCK	108-88-3		
1,2,3-Trichlorobenzene	ND	ug/kg	5.4	1.0	04/25/02 23:37	BCK	87-61-6		
1,2,4-Trichlorobenzene	ND	ug/kg	5.4	1.0	04/25/02 23:37	BCK	120-82-1		
1,1,1-Trichloroethane	ND	ug/kg	5.4	1.0	04/25/02 23:37	BCK	71-55-6		
1,1,2-Trichloroethane	ND	ug/kg	5.4	1.0	04/25/02 23:37	BCK	79-00-5		
Trichloroethene	ND	ug/kg	5.4	1.0	04/25/02 23:37	BCK	79-01-6		
Trichlorofluoromethane	ND	ug/kg	5.4	1.0	04/25/02 23:37	BCK	75-69-4		
1,2,3-Trichloropropane	ND	ug/kg	5.4	1.0	04/25/02 23:37	BCK	96-18-4		
1,2,4-Trimethylbenzene	ND	ug/kg	5.4	1.0	04/25/02 23:37	BCK	95-63-6		
1,3,5-Trimethylbenzene	ND	ug/kg	5.4	1.0	04/25/02 23:37	BCK	108-67-8		
Vinyl chloride	ND	ug/kg	11.	1.0	04/25/02 23:37	BCK	75-01-4		
m&p-Xylene	ND	ug/kg	11.	1.0	04/25/02 23:37	BCK			
o-Xylene	ND	ug/kg	5.4	1.0	04/25/02 23:37	BCK	95-47-6		
Toluene-d8 (S)	96	%		1.0	04/25/02 23:37	BCK	2037-26-5		
4-Bromofluorobenzene (S)	98	%		1.0	04/25/02 23:37	BCK	460-00-4		
Dibromofluoromethane (S)	86	%		1.0	04/25/02 23:37	BCK			
1,2-Dichloroethane-d4 (S)	82	%		1.0	04/25/02 23:37	BCK	17060-07-0		

Laboratory Certification IDs
NC Wastewater 12
NC Drinking Water 37706
SC 99006

REPORT OF LABORATORY ANALYSIS
This report shall not be reproduced, except in full,
without the written consent of Pace Analytical Services, Inc.

Laboratory Certification IDs
LA Wastewater 04034
VA Drinking Water 213
FL NELAP E87627

Pace Analytical™
www.pacelabs.com

Pace Analytical Services, Inc.
9800 Kincey Avenue, Suite 100
Huntersville, NC 28078
Phone: 704.875.9092
Fax: 704.875.9091

Lab Project Number: 9232215
Client Project ID: NC101047.0002/Worth

Lab Sample No: 922218797 Project Sample Number: 9232215-020 Date Collected: 04/19/02 11:50
Client Sample ID: GP-40(5.5-7') Matrix: Soil Date Received: 04/20/02 09:45

Parameters	Results	Units	Report Limit	Dilution	Analyzed	by	CAS No.	Ftnote	Reg Limit
Wet Chemistry									
Percent Moisture	Method: % Moisture								
Percent Moisture	19.8	%		0.8	04/22/02	BYH			
GC/MS Volatiles									
GC/MS VOCs by 8260, low level	Prep/Method: EPA 8260 / EPA 8260								
Acetone	ND	ug/kg	120	1.0	04/27/02 03:50	BCK	67-64-1		
Benzene	ND	ug/kg	6.2	1.0	04/27/02 03:50	BCK	71-43-2		
Bromobenzene	ND	ug/kg	6.2	1.0	04/27/02 03:50	BCK	108-86-1		
Bromochloromethane	ND	ug/kg	6.2	1.0	04/27/02 03:50	BCK	74-97-5		
Bromodichloromethane	ND	ug/kg	6.2	1.0	04/27/02 03:50	BCK	75-27-4		
Bromoform	ND	ug/kg	6.2	1.0	04/27/02 03:50	BCK	75-25-2		
Bromomethane	ND	ug/kg	12.	1.0	04/27/02 03:50	BCK	74-83-9		
2-Butanone (MEK)	ND	ug/kg	120	1.0	04/27/02 03:50	BCK	78-93-3		
n-Butylbenzene	ND	ug/kg	6.2	1.0	04/27/02 03:50	BCK	104-51-8		
sec-Butylbenzene	ND	ug/kg	6.2	1.0	04/27/02 03:50	BCK	135-98-8		
tert-Butylbenzene	ND	ug/kg	6.2	1.0	04/27/02 03:50	BCK	98-06-6		
Carbon disulfide	ND	ug/kg	6.2	1.0	04/27/02 03:50	BCK	75-15-0		
Carbon tetrachloride	ND	ug/kg	6.2	1.0	04/27/02 03:50	BCK	56-23-5		
Chlorobenzene	ND	ug/kg	6.2	1.0	04/27/02 03:50	BCK	108-90-7		
Chloroethane	ND	ug/kg	12.	1.0	04/27/02 03:50	BCK	75-00-3		
Chloroform	ND	ug/kg	6.2	1.0	04/27/02 03:50	BCK	67-66-3		
Chloromethane	ND	ug/kg	12.	1.0	04/27/02 03:50	BCK	74-87-3		
2-Chlorotoluene	ND	ug/kg	6.2	1.0	04/27/02 03:50	BCK	95-49-8		
4-Chlorotoluene	ND	ug/kg	6.2	1.0	04/27/02 03:50	BCK	106-43-4		
1,2-Dibromo-3-chloropropane	ND	ug/kg	6.2	1.0	04/27/02 03:50	BCK	96-12-8		
Dibromochloromethane	ND	ug/kg	6.2	1.0	04/27/02 03:50	BCK	124-48-1		
1,2-Dibromoethane (EDB)	ND	ug/kg	6.2	1.0	04/27/02 03:50	BCK	106-93-4		
Dibromomethane	ND	ug/kg	6.2	1.0	04/27/02 03:50	BCK	74-95-3		
1,2-Dichlorobenzene	ND	ug/kg	6.2	1.0	04/27/02 03:50	BCK	95-50-1		
1,3-Dichlorobenzene	ND	ug/kg	6.2	1.0	04/27/02 03:50	BCK	541-73-1		
1,4-Dichlorobenzene	ND	ug/kg	6.2	1.0	04/27/02 03:50	BCK	106-46-7		
Dichlorodifluoromethane	ND	ug/kg	12.	1.0	04/27/02 03:50	BCK	75-71-8		
1,1-Dichloroethane	ND	ug/kg	6.2	1.0	04/27/02 03:50	BCK	75-34-3		
1,2-Dichloroethane	ND	ug/kg	6.2	1.0	04/27/02 03:50	BCK	107-06-2		
1,1-Dichloroethene	ND	ug/kg	6.2	1.0	04/27/02 03:50	BCK	75-35-4		
cis-1,2-Dichloroethene	ND	ug/kg	6.2	1.0	04/27/02 03:50	BCK	156-59-2		
trans-1,2-Dichloroethene	ND	ug/kg	6.2	1.0	04/27/02 03:50	BCK	156-60-5		

Laboratory Certification IDs
NC Wastewater 12
NC Drinking Water 37706
SC 99006

REPORT OF LABORATORY ANALYSIS
This report shall not be reproduced, except in full,
without the written consent of Pace Analytical Services, Inc.

Laboratory Certification IDs
LA Wastewater 04034
VA Drinking Water 213
FL NELAP E87627

Pace Analytical™
www.pacelabs.com

Pace Analytical Services, Inc.
9800 Kincey Avenue, Suite 100
Huntersville, NC 28078
Phone: 704.875.9092
Fax: 704.875.9091

Lab Project Number: 9232215
Client Project ID: NC101047.0002/Worth

Lab Sample No: 922218797 Project Sample Number: 9232215-020 Date Collected: 04/19/02 11:50
Client Sample ID: GP-40(5.5-7') Matrix: Soil Date Received: 04/20/02 09:45

Parameters	Results	Units	Report Limit	Dilution	Analyzed	by	CAS No.	Ftnote	Reg Limit
1,2-Dichloropropane	ND	ug/kg	6.2	1.0	04/27/02 03:50	BCK	78-87-5		
1,3-Dichloropropane	ND	ug/kg	6.2	1.0	04/27/02 03:50	BCK	142-28-9		
2,2-Dichloropropane	ND	ug/kg	6.2	1.0	04/27/02 03:50	BCK	594-20-7		
1,1-Dichloropropene	ND	ug/kg	6.2	1.0	04/27/02 03:50	BCK	563-58-6		
Diisopropyl ether	ND	ug/kg	6.2	1.0	04/27/02 03:50	BCK	108-20-3		
Ethylbenzene	ND	ug/kg	6.2	1.0	04/27/02 03:50	BCK	100-41-4		
Hexachloro-1,3-butadiene	ND	ug/kg	6.2	1.0	04/27/02 03:50	BCK	87-68-3		
Isopropylbenzene (Cumene)	ND	ug/kg	6.2	1.0	04/27/02 03:50	BCK	98-82-8		
p-Isopropyltoluene	ND	ug/kg	6.2	1.0	04/27/02 03:50	BCK	99-87-6		
Methylene chloride	12.	ug/kg	6.2	1.0	04/27/02 03:50	BCK	75-09-2	2	
4-Methyl-2-pentanone (MIBK)	ND	ug/kg	62.	1.0	04/27/02 03:50	BCK	108-10-1		
Methyl-tert-butyl ether	ND	ug/kg	6.2	1.0	04/27/02 03:50	BCK	1634-04-4		
Naphthalene	ND	ug/kg	6.2	1.0	04/27/02 03:50	BCK	91-20-3		
n-Propylbenzene	ND	ug/kg	6.2	1.0	04/27/02 03:50	BCK	103-65-1		
Styrene	ND	ug/kg	6.2	1.0	04/27/02 03:50	BCK	100-42-5		
1,1,1,2-Tetrachloroethane	ND	ug/kg	6.2	1.0	04/27/02 03:50	BCK	630-20-6		
1,1,2,2-Tetrachloroethane	ND	ug/kg	6.2	1.0	04/27/02 03:50	BCK	79-34-5		
Tetrachloroethene	12.	ug/kg	6.2	1.0	04/27/02 03:50	BCK	127-18-4		
Tetrahydrofuran	ND	ug/kg	62.	1.0	04/27/02 03:50	BCK	109-99-9		
Toluene	ND	ug/kg	6.2	1.0	04/27/02 03:50	BCK	108-88-3		
1,2,3-Trichlorobenzene	ND	ug/kg	6.2	1.0	04/27/02 03:50	BCK	87-61-6		
1,2,4-Trichlorobenzene	ND	ug/kg	6.2	1.0	04/27/02 03:50	BCK	120-82-1		
1,1,1-Trichloroethane	ND	ug/kg	6.2	1.0	04/27/02 03:50	BCK	71-55-6		
1,1,2-Trichloroethane	ND	ug/kg	6.2	1.0	04/27/02 03:50	BCK	79-00-5		
Trichloroethene	ND	ug/kg	6.2	1.0	04/27/02 03:50	BCK	79-01-6		
Trichlorofluoromethane	ND	ug/kg	6.2	1.0	04/27/02 03:50	BCK	75-69-4		
1,2,3-Trichloropropane	ND	ug/kg	6.2	1.0	04/27/02 03:50	BCK	96-18-4		
1,2,4-Trimethylbenzene	ND	ug/kg	6.2	1.0	04/27/02 03:50	BCK	95-63-6		
1,3,5-Trimethylbenzene	ND	ug/kg	6.2	1.0	04/27/02 03:50	BCK	108-67-8		
Vinyl chloride	ND	ug/kg	12.	1.0	04/27/02 03:50	BCK	75-01-4		
m&p-Xylene	ND	ug/kg	12.	1.0	04/27/02 03:50	BCK			
o-Xylene	ND	ug/kg	6.2	1.0	04/27/02 03:50	BCK	95-47-6		
Toluene-d8 (S)	100	%		1.0	04/27/02 03:50	BCK	2037-26-5		
4-Bromofluorobenzene (S)	90	%		1.0	04/27/02 03:50	BCK	460-00-4		
Dibromofluoromethane (S)	100	%		1.0	04/27/02 03:50	BCK			
1,2-Dichloroethane-d4 (S)	104	%		1.0	04/27/02 03:50	BCK	17060-07-0		

Laboratory Certification IDs
NC Wastewater 12
NC Drinking Water 37706
SC 99006

REPORT OF LABORATORY ANALYSIS
This report shall not be reproduced, except in full,
without the written consent of Pace Analytical Services, Inc.

Laboratory Certification IDs
LA Wastewater 04034
VA Drinking Water 213
FL NELAP E87627

Pace Analytical™
www.pacelabs.com

Pace Analytical Services, Inc.
9800 Kincey Avenue, Suite 100
Huntersville, NC 28078
Phone: 704.875.9092
Fax: 704.875.9091

Lab Project Number: 9232215
Client Project ID: NC101047.0002/Worth

Lab Sample No: 922218805 Project Sample Number: 9232215-021 Date Collected: 04/19/02 10:25
Client Sample ID: GP-43(1-2') Matrix: Soil Date Received: 04/20/02 09:45

Parameters	Results	Units	Report Limit	Dilution	Analyzed	by	CAS No.	Ftnote	Reg Limit
Wet Chemistry									
Percent Moisture	Method: % Moisture								
Percent Moisture	17.9	%		0.8	04/22/02	BYH			
GC/MS Volatiles									
GC/MS VOCs by 8260, low level	Prep/Method: EPA 8260 / EPA 8260								
Acetone	ND	ug/kg	120	1.0	04/26/02 01:10	BCK	67-64-1		
Benzene	ND	ug/kg	6.1	1.0	04/26/02 01:10	BCK	71-43-2		
Bromobenzene	ND	ug/kg	6.1	1.0	04/26/02 01:10	BCK	108-86-1		
Bromochloromethane	ND	ug/kg	6.1	1.0	04/26/02 01:10	BCK	74-97-5		
Bromodichloromethane	ND	ug/kg	6.1	1.0	04/26/02 01:10	BCK	75-27-4		
Bromoform	ND	ug/kg	6.1	1.0	04/26/02 01:10	BCK	75-25-2		
Bromomethane	ND	ug/kg	12.	1.0	04/26/02 01:10	BCK	74-83-9		
2-Butanone (MEK)	ND	ug/kg	120	1.0	04/26/02 01:10	BCK	78-93-3		
n-Butylbenzene	ND	ug/kg	6.1	1.0	04/26/02 01:10	BCK	104-51-8		
sec-Butylbenzene	ND	ug/kg	6.1	1.0	04/26/02 01:10	BCK	135-98-8		
tert-Butylbenzene	ND	ug/kg	6.1	1.0	04/26/02 01:10	BCK	98-06-6		
Carbon disulfide	ND	ug/kg	6.1	1.0	04/26/02 01:10	BCK	75-15-0		
Carbon tetrachloride	ND	ug/kg	6.1	1.0	04/26/02 01:10	BCK	56-23-5		
Chlorobenzene	ND	ug/kg	6.1	1.0	04/26/02 01:10	BCK	108-90-7		
Chloroethane	ND	ug/kg	12.	1.0	04/26/02 01:10	BCK	75-00-3		
Chloroform	ND	ug/kg	6.1	1.0	04/26/02 01:10	BCK	67-66-3		
Chloromethane	ND	ug/kg	12.	1.0	04/26/02 01:10	BCK	74-87-3		
2-Chlorotoluene	ND	ug/kg	6.1	1.0	04/26/02 01:10	BCK	95-49-8		
4-Chlorotoluene	ND	ug/kg	6.1	1.0	04/26/02 01:10	BCK	106-43-4		
1,2-Dibromo-3-chloropropane	ND	ug/kg	6.1	1.0	04/26/02 01:10	BCK	96-12-8		
Dibromochloromethane	ND	ug/kg	6.1	1.0	04/26/02 01:10	BCK	124-48-1		
1,2-Dibromoethane (EDB)	ND	ug/kg	6.1	1.0	04/26/02 01:10	BCK	106-93-4		
Dibromomethane	ND	ug/kg	6.1	1.0	04/26/02 01:10	BCK	74-95-3		
1,2-Dichlorobenzene	ND	ug/kg	6.1	1.0	04/26/02 01:10	BCK	95-50-1		
1,3-Dichlorobenzene	ND	ug/kg	6.1	1.0	04/26/02 01:10	BCK	541-73-1		
1,4-Dichlorobenzene	ND	ug/kg	6.1	1.0	04/26/02 01:10	BCK	106-46-7		
Dichlorodifluoromethane	ND	ug/kg	12.	1.0	04/26/02 01:10	BCK	75-71-8		
1,1-Dichloroethane	ND	ug/kg	6.1	1.0	04/26/02 01:10	BCK	75-34-3		
1,2-Dichloroethane	ND	ug/kg	6.1	1.0	04/26/02 01:10	BCK	107-06-2		
1,1-Dichloroethene	ND	ug/kg	6.1	1.0	04/26/02 01:10	BCK	75-35-4		
cis-1,2-Dichloroethene	ND	ug/kg	6.1	1.0	04/26/02 01:10	BCK	156-59-2		
trans-1,2-Dichloroethene	ND	ug/kg	6.1	1.0	04/26/02 01:10	BCK	156-60-5		

Laboratory Certification IDs
NC Wastewater 12
NC Drinking Water 37706
SC 99006

REPORT OF LABORATORY ANALYSIS
This report shall not be reproduced, except in full,
without the written consent of Pace Analytical Services, Inc.

Laboratory Certification IDs
LA Wastewater 04034
VA Drinking Water 213
FL NELAP E87627

Pace Analytical™
www.pacelabs.com

Pace Analytical Services, Inc.
9800 Kincey Avenue, Suite 100
Huntersville, NC 28078
Phone: 704.875.9092
Fax: 704.875.9091

Lab Project Number: 9232215
Client Project ID: NC101047.0002/Worth

Lab Sample No: 922218805 Project Sample Number: 9232215-021 Date Collected: 04/19/02 10:25
Client Sample ID: GP-43(1-2') Matrix: Soil Date Received: 04/20/02 09:45

Parameters	Results	Units	Report Limit	Dilution	Analyzed	by	CAS No.	Ftnote	Reg Limit
1,2-Dichloropropane	ND	ug/kg	6.1	1.0	04/26/02 01:10	BCK	78-87-5		
1,3-Dichloropropane	ND	ug/kg	6.1	1.0	04/26/02 01:10	BCK	142-28-9		
2,2-Dichloropropane	ND	ug/kg	6.1	1.0	04/26/02 01:10	BCK	594-20-7		
1,1-Dichloropropene	ND	ug/kg	6.1	1.0	04/26/02 01:10	BCK	563-58-6		
Diisopropyl ether	ND	ug/kg	6.1	1.0	04/26/02 01:10	BCK	108-20-3		
Ethylbenzene	8.2	ug/kg	6.1	1.0	04/26/02 01:10	BCK	100-41-4		
Hexachloro-1,3-butadiene	ND	ug/kg	6.1	1.0	04/26/02 01:10	BCK	87-68-3		
Isopropylbenzene (Cumene)	ND	ug/kg	6.1	1.0	04/26/02 01:10	BCK	98-82-8		
p-Isopropyltoluene	ND	ug/kg	6.1	1.0	04/26/02 01:10	BCK	99-87-6		
Methylene chloride	8.4	ug/kg	6.1	1.0	04/26/02 01:10	BCK	75-09-2	2	
4-Methyl-2-pentanone (MIBK)	ND	ug/kg	61.	1.0	04/26/02 01:10	BCK	108-10-1		
Methyl-tert-butyl ether	ND	ug/kg	6.1	1.0	04/26/02 01:10	BCK	1634-04-4		
Naphthalene	ND	ug/kg	6.1	1.0	04/26/02 01:10	BCK	91-20-3		
n-Propylbenzene	ND	ug/kg	6.1	1.0	04/26/02 01:10	BCK	103-65-1		
Styrene	7.3	ug/kg	6.1	1.0	04/26/02 01:10	BCK	100-42-5		
1,1,1,2-Tetrachloroethane	ND	ug/kg	6.1	1.0	04/26/02 01:10	BCK	630-20-6		
1,1,2,2-Tetrachloroethane	ND	ug/kg	6.1	1.0	04/26/02 01:10	BCK	79-34-5		
Tetrachloroethene	23.	ug/kg	6.1	1.0	04/26/02 01:10	BCK	127-18-4		
Tetrahydrofuran	ND	ug/kg	61.	1.0	04/26/02 01:10	BCK	109-99-9		
Toluene	12.	ug/kg	6.1	1.0	04/26/02 01:10	BCK	108-88-3		
1,2,3-Trichlorobenzene	ND	ug/kg	6.1	1.0	04/26/02 01:10	BCK	87-61-6		
1,2,4-Trichlorobenzene	ND	ug/kg	6.1	1.0	04/26/02 01:10	BCK	120-82-1		
1,1,1-Trichloroethane	ND	ug/kg	6.1	1.0	04/26/02 01:10	BCK	71-55-6		
1,1,2-Trichloroethane	ND	ug/kg	6.1	1.0	04/26/02 01:10	BCK	79-00-5		
Trichloroethene	33.	ug/kg	6.1	1.0	04/26/02 01:10	BCK	79-01-6		
Trichlorofluoromethane	ND	ug/kg	6.1	1.0	04/26/02 01:10	BCK	75-69-4		
1,2,3-Trichloropropane	ND	ug/kg	6.1	1.0	04/26/02 01:10	BCK	96-18-4		
1,2,4-Trimethylbenzene	ND	ug/kg	6.1	1.0	04/26/02 01:10	BCK	95-63-6		
1,3,5-Trimethylbenzene	ND	ug/kg	6.1	1.0	04/26/02 01:10	BCK	108-67-8		
Vinyl chloride	ND	ug/kg	12.	1.0	04/26/02 01:10	BCK	75-01-4		
m&p-Xylene	13.	ug/kg	12.	1.0	04/26/02 01:10	BCK			
o-Xylene	8.4	ug/kg	6.1	1.0	04/26/02 01:10	BCK	95-47-6		
Toluene-d8 (S)	95	%		1.0	04/26/02 01:10	BCK	2037-26-5		
4-Bromofluorobenzene (S)	82	%		1.0	04/26/02 01:10	BCK	460-00-4		
Dibromofluoromethane (S)	91	%		1.0	04/26/02 01:10	BCK			
1,2-Dichloroethane-d4 (S)	85	%		1.0	04/26/02 01:10	BCK	17060-07-0		

Laboratory Certification IDs
NC Wastewater 12
NC Drinking Water 37706
SC 99006

REPORT OF LABORATORY ANALYSIS
This report shall not be reproduced, except in full,
without the written consent of Pace Analytical Services, Inc.

Laboratory Certification IDs
LA Wastewater 04034
VA Drinking Water 213
FL NELAP E87627

Pace Analytical™
www.pacelabs.com

Pace Analytical Services, Inc.
9800 Kincey Avenue, Suite 100
Huntersville, NC 28078
Phone: 704.875.9092
Fax: 704.875.9091

Lab Project Number: 9232215
Client Project ID: NC101047.0002/Worth

Lab Sample No: 922218813 Project Sample Number: 9232215-022 Date Collected: 04/19/02 12:25
Client Sample ID: HA-4 (2-3') Matrix: Soil Date Received: 04/20/02 09:45

Parameters	Results	Units	Report Limit	Dilution	Analyzed	by	CAS No.	Ftnote	Reg Limit
Wet Chemistry									
Percent Moisture	Method: % Moisture								
Percent Moisture	19.5	%		0.8	04/22/02	BYH			
GC/MS Volatiles									
GC/MS VOCs by 8260, low level	Prep/Method: EPA 8260 / EPA 8260								
Acetone	ND	ug/kg	120	1.0	04/25/02 23:06	BCK	67-64-1		
Benzene	ND	ug/kg	6.2	1.0	04/25/02 23:06	BCK	71-43-2		
Bromobenzene	ND	ug/kg	6.2	1.0	04/25/02 23:06	BCK	108-86-1		
Bromochloromethane	ND	ug/kg	6.2	1.0	04/25/02 23:06	BCK	74-97-5		
Bromodichloromethane	ND	ug/kg	6.2	1.0	04/25/02 23:06	BCK	75-27-4		
Bromoform	ND	ug/kg	6.2	1.0	04/25/02 23:06	BCK	75-25-2		
Bromomethane	ND	ug/kg	12.	1.0	04/25/02 23:06	BCK	74-83-9		
2-Butanone (MEK)	ND	ug/kg	120	1.0	04/25/02 23:06	BCK	78-93-3		
n-Butylbenzene	ND	ug/kg	6.2	1.0	04/25/02 23:06	BCK	104-51-8		
sec-Butylbenzene	ND	ug/kg	6.2	1.0	04/25/02 23:06	BCK	135-98-8		
tert-Butylbenzene	ND	ug/kg	6.2	1.0	04/25/02 23:06	BCK	98-06-6		
Carbon disulfide	ND	ug/kg	6.2	1.0	04/25/02 23:06	BCK	75-15-0		
Carbon tetrachloride	ND	ug/kg	6.2	1.0	04/25/02 23:06	BCK	56-23-5		
Chlorobenzene	ND	ug/kg	6.2	1.0	04/25/02 23:06	BCK	108-90-7		
Chloroethane	ND	ug/kg	12.	1.0	04/25/02 23:06	BCK	75-00-3		
Chloroform	ND	ug/kg	6.2	1.0	04/25/02 23:06	BCK	67-66-3		
Chloromethane	ND	ug/kg	12.	1.0	04/25/02 23:06	BCK	74-87-3		
2-Chlorotoluene	ND	ug/kg	6.2	1.0	04/25/02 23:06	BCK	95-49-8		
4-Chlorotoluene	ND	ug/kg	6.2	1.0	04/25/02 23:06	BCK	106-43-4		
1,2-Dibromo-3-chloropropane	ND	ug/kg	6.2	1.0	04/25/02 23:06	BCK	96-12-8		
Dibromochloromethane	ND	ug/kg	6.2	1.0	04/25/02 23:06	BCK	124-48-1		
1,2-Dibromoethane (EDB)	ND	ug/kg	6.2	1.0	04/25/02 23:06	BCK	106-93-4		
Dibromomethane	ND	ug/kg	6.2	1.0	04/25/02 23:06	BCK	74-95-3		
1,2-Dichlorobenzene	ND	ug/kg	6.2	1.0	04/25/02 23:06	BCK	95-50-1		
1,3-Dichlorobenzene	ND	ug/kg	6.2	1.0	04/25/02 23:06	BCK	541-73-1		
1,4-Dichlorobenzene	ND	ug/kg	6.2	1.0	04/25/02 23:06	BCK	106-46-7		
Dichlorodifluoromethane	ND	ug/kg	12.	1.0	04/25/02 23:06	BCK	75-71-8		
1,1-Dichloroethane	ND	ug/kg	6.2	1.0	04/25/02 23:06	BCK	75-34-3		
1,2-Dichloroethane	ND	ug/kg	6.2	1.0	04/25/02 23:06	BCK	107-06-2		
1,1-Dichloroethene	ND	ug/kg	6.2	1.0	04/25/02 23:06	BCK	75-35-4		
cis-1,2-Dichloroethene	ND	ug/kg	6.2	1.0	04/25/02 23:06	BCK	156-59-2		
trans-1,2-Dichloroethene	ND	ug/kg	6.2	1.0	04/25/02 23:06	BCK	156-60-5		

Laboratory Certification IDs
NC Wastewater 12
NC Drinking Water 37706
SC 99006

REPORT OF LABORATORY ANALYSIS
This report shall not be reproduced, except in full,
without the written consent of Pace Analytical Services, Inc.

Laboratory Certification IDs
LA Wastewater 04034
VA Drinking Water 213
FL NELAP E87627

Pace Analytical™
www.pacelabs.com

Pace Analytical Services, Inc.
9800 Kincey Avenue, Suite 100
Huntersville, NC 28078
Phone: 704.875.9092
Fax: 704.875.9091

Lab Project Number: 9232215
Client Project ID: NC101047.0002/Worth

Lab Sample No: 922218813 Project Sample Number: 9232215-022 Date Collected: 04/19/02 12:25
Client Sample ID: HA-4 (2-3') Matrix: Soil Date Received: 04/20/02 09:45

Parameters	Results	Units	Report Limit	Dilution	Analyzed	by	CAS No.	Ftnote	Reg Limit
1,2-Dichloropropane	ND	ug/kg	6.2	1.0	04/25/02 23:06	BCK	78-87-5		
1,3-Dichloropropane	ND	ug/kg	6.2	1.0	04/25/02 23:06	BCK	142-28-9		
2,2-Dichloropropane	ND	ug/kg	6.2	1.0	04/25/02 23:06	BCK	594-20-7		
1,1-Dichloropropene	ND	ug/kg	6.2	1.0	04/25/02 23:06	BCK	563-58-6		
Diisopropyl ether	ND	ug/kg	6.2	1.0	04/25/02 23:06	BCK	108-20-3		
Ethylbenzene	19.	ug/kg	6.2	1.0	04/25/02 23:06	BCK	100-41-4		
Hexachloro-1,3-butadiene	ND	ug/kg	6.2	1.0	04/25/02 23:06	BCK	87-68-3		
Isopropylbenzene (Cumene)	ND	ug/kg	6.2	1.0	04/25/02 23:06	BCK	98-82-8		
p-Isopropyltoluene	ND	ug/kg	6.2	1.0	04/25/02 23:06	BCK	99-87-6		
Methylene chloride	6.7	ug/kg	6.2	1.0	04/25/02 23:06	BCK	75-09-2	2	
4-Methyl-2-pentanone (MIBK)	ND	ug/kg	62.	1.0	04/25/02 23:06	BCK	108-10-1		
Methyl-tert-butyl ether	ND	ug/kg	6.2	1.0	04/25/02 23:06	BCK	1634-04-4		
Naphthalene	ND	ug/kg	6.2	1.0	04/25/02 23:06	BCK	91-20-3		
n-Propylbenzene	ND	ug/kg	6.2	1.0	04/25/02 23:06	BCK	103-65-1		
Styrene	ND	ug/kg	6.2	1.0	04/25/02 23:06	BCK	100-42-5		
1,1,1,2-Tetrachloroethane	ND	ug/kg	6.2	1.0	04/25/02 23:06	BCK	630-20-6		
1,1,2,2-Tetrachloroethane	ND	ug/kg	6.2	1.0	04/25/02 23:06	BCK	79-34-5		
Tetrachloroethene	52.	ug/kg	6.2	1.0	04/25/02 23:06	BCK	127-18-4		
Tetrahydrofuran	ND	ug/kg	62.	1.0	04/25/02 23:06	BCK	109-99-9		
Toluene	ND	ug/kg	6.2	1.0	04/25/02 23:06	BCK	108-88-3		
1,2,3-Trichlorobenzene	ND	ug/kg	6.2	1.0	04/25/02 23:06	BCK	87-61-6		
1,2,4-Trichlorobenzene	ND	ug/kg	6.2	1.0	04/25/02 23:06	BCK	120-82-1		
1,1,1-Trichloroethane	ND	ug/kg	6.2	1.0	04/25/02 23:06	BCK	71-55-6		
1,1,2-Trichloroethane	ND	ug/kg	6.2	1.0	04/25/02 23:06	BCK	79-00-5		
Trichloroethene	120	ug/kg	6.2	1.0	04/25/02 23:06	BCK	79-01-6		
Trichlorofluoromethane	ND	ug/kg	6.2	1.0	04/25/02 23:06	BCK	75-69-4		
1,2,3-Trichloropropane	ND	ug/kg	6.2	1.0	04/25/02 23:06	BCK	96-18-4		
1,2,4-Trimethylbenzene	ND	ug/kg	6.2	1.0	04/25/02 23:06	BCK	95-63-6		
1,3,5-Trimethylbenzene	ND	ug/kg	6.2	1.0	04/25/02 23:06	BCK	108-67-8		
Vinyl chloride	ND	ug/kg	12.	1.0	04/25/02 23:06	BCK	75-01-4		
m&p-Xylene	27.	ug/kg	12.	1.0	04/25/02 23:06	BCK			
o-Xylene	25.	ug/kg	6.2	1.0	04/25/02 23:06	BCK	95-47-6		
Toluene-d8 (S)	95	%		1.0	04/25/02 23:06	BCK	2037-26-5		
4-Bromofluorobenzene (S)	92	%		1.0	04/25/02 23:06	BCK	460-00-4		
Dibromofluoromethane (S)	87	%		1.0	04/25/02 23:06	BCK			
1,2-Dichloroethane-d4 (S)	79	%		1.0	04/25/02 23:06	BCK	17060-07-0		

Laboratory Certification IDs
NC Wastewater 12
NC Drinking Water 37706
SC 99006

REPORT OF LABORATORY ANALYSIS
This report shall not be reproduced, except in full,
without the written consent of Pace Analytical Services, Inc.

Laboratory Certification IDs
LA Wastewater 04034
VA Drinking Water 213
FL NELAP E87627

Pace Analytical™
www.pacelabs.com

Pace Analytical Services, Inc.
9800 Kincey Avenue, Suite 100
Huntersville, NC 28078
Phone: 704.875.9092
Fax: 704.875.9091

Lab Project Number: 9232215
Client Project ID: NC101047.0002/Worth

Lab Sample No: 922218821 Project Sample Number: 9232215-023 Date Collected: 04/19/02 12:45
Client Sample ID: HA-5 (0-1') Matrix: Soil Date Received: 04/20/02 09:45

Parameters	Results	Units	Report Limit	Dilution	Analyzed	by	CAS No.	Ftnote	Reg Limit
Wet Chemistry									
Percent Moisture	Method: % Moisture								
Percent Moisture	22.4	%		0.8	04/22/02	BYH			
GC/MS Volatiles									
GC/MS VOCs by 8260, low level	Prep/Method: EPA 8260 / EPA 8260								
Acetone	ND	ug/kg	130	1.0	04/26/02 00:08	BCK	67-64-1		
Benzene	ND	ug/kg	6.4	1.0	04/26/02 00:08	BCK	71-43-2		
Bromobenzene	ND	ug/kg	6.4	1.0	04/26/02 00:08	BCK	108-86-1		
Bromochloromethane	ND	ug/kg	6.4	1.0	04/26/02 00:08	BCK	74-97-5		
Bromodichloromethane	ND	ug/kg	6.4	1.0	04/26/02 00:08	BCK	75-27-4		
Bromoform	ND	ug/kg	6.4	1.0	04/26/02 00:08	BCK	75-25-2		
Bromomethane	ND	ug/kg	13.	1.0	04/26/02 00:08	BCK	74-83-9		
2-Butanone (MEK)	ND	ug/kg	130	1.0	04/26/02 00:08	BCK	78-93-3		
n-Butylbenzene	ND	ug/kg	6.4	1.0	04/26/02 00:08	BCK	104-51-8		
sec-Butylbenzene	ND	ug/kg	6.4	1.0	04/26/02 00:08	BCK	135-98-8		
tert-Butylbenzene	ND	ug/kg	6.4	1.0	04/26/02 00:08	BCK	98-06-6		
Carbon disulfide	ND	ug/kg	6.4	1.0	04/26/02 00:08	BCK	75-15-0		
Carbon tetrachloride	ND	ug/kg	6.4	1.0	04/26/02 00:08	BCK	56-23-5		
Chlorobenzene	ND	ug/kg	6.4	1.0	04/26/02 00:08	BCK	108-90-7		
Chloroethane	ND	ug/kg	13.	1.0	04/26/02 00:08	BCK	75-00-3		
Chloroform	ND	ug/kg	6.4	1.0	04/26/02 00:08	BCK	67-66-3		
Chloromethane	ND	ug/kg	13.	1.0	04/26/02 00:08	BCK	74-87-3		
2-Chlorotoluene	ND	ug/kg	6.4	1.0	04/26/02 00:08	BCK	95-49-8		
4-Chlorotoluene	ND	ug/kg	6.4	1.0	04/26/02 00:08	BCK	106-43-4		
1,2-Dibromo-3-chloropropane	ND	ug/kg	6.4	1.0	04/26/02 00:08	BCK	96-12-8		
Dibromochloromethane	ND	ug/kg	6.4	1.0	04/26/02 00:08	BCK	124-48-1		
1,2-Dibromoethane (EDB)	ND	ug/kg	6.4	1.0	04/26/02 00:08	BCK	106-93-4		
Dibromomethane	ND	ug/kg	6.4	1.0	04/26/02 00:08	BCK	74-95-3		
1,2-Dichlorobenzene	ND	ug/kg	6.4	1.0	04/26/02 00:08	BCK	95-50-1		
1,3-Dichlorobenzene	ND	ug/kg	6.4	1.0	04/26/02 00:08	BCK	541-73-1		
1,4-Dichlorobenzene	ND	ug/kg	6.4	1.0	04/26/02 00:08	BCK	106-46-7		
Dichlorodifluoromethane	ND	ug/kg	13.	1.0	04/26/02 00:08	BCK	75-71-8		
1,1-Dichloroethane	ND	ug/kg	6.4	1.0	04/26/02 00:08	BCK	75-34-3		
1,2-Dichloroethane	ND	ug/kg	6.4	1.0	04/26/02 00:08	BCK	107-06-2		
1,1-Dichloroethene	ND	ug/kg	6.4	1.0	04/26/02 00:08	BCK	75-35-4		
cis-1,2-Dichloroethene	ND	ug/kg	6.4	1.0	04/26/02 00:08	BCK	156-59-2		
trans-1,2-Dichloroethene	ND	ug/kg	6.4	1.0	04/26/02 00:08	BCK	156-60-5		

Laboratory Certification IDs
NC Wastewater 12
NC Drinking Water 37706
SC 99006

REPORT OF LABORATORY ANALYSIS
This report shall not be reproduced, except in full,
without the written consent of Pace Analytical Services, Inc.

Laboratory Certification IDs
LA Wastewater 04034
VA Drinking Water 213
FL NELAP E87627

Pace Analytical™
www.pacelabs.com

Pace Analytical Services, Inc.
9800 Kincey Avenue, Suite 100
Huntersville, NC 28078
Phone: 704.875.9092
Fax: 704.875.9091

Lab Project Number: 9232215
Client Project ID: NC101047.0002/Worth

Lab Sample No: 922218821 Project Sample Number: 9232215-023 Date Collected: 04/19/02 12:45
Client Sample ID: HA-5 (0-1') Matrix: Soil Date Received: 04/20/02 09:45

Parameters	Results	Units	Report Limit	Dilution	Analyzed	by	CAS No.	Ftnote	Reg Limit
1,2-Dichloropropane	ND	ug/kg	6.4	1.0	04/26/02 00:08	BCK	78-87-5		
1,3-Dichloropropane	ND	ug/kg	6.4	1.0	04/26/02 00:08	BCK	142-28-9		
2,2-Dichloropropane	ND	ug/kg	6.4	1.0	04/26/02 00:08	BCK	594-20-7		
1,1-Dichloropropene	ND	ug/kg	6.4	1.0	04/26/02 00:08	BCK	563-58-6		
Diisopropyl ether	ND	ug/kg	6.4	1.0	04/26/02 00:08	BCK	108-20-3		
Ethylbenzene	8.4	ug/kg	6.4	1.0	04/26/02 00:08	BCK	100-41-4		
Hexachloro-1,3-butadiene	ND	ug/kg	6.4	1.0	04/26/02 00:08	BCK	87-68-3		
Isopropylbenzene (Cumene)	ND	ug/kg	6.4	1.0	04/26/02 00:08	BCK	98-82-8		
p-Isopropyltoluene	ND	ug/kg	6.4	1.0	04/26/02 00:08	BCK	99-87-6		
Methylene chloride	8.9	ug/kg	6.4	1.0	04/26/02 00:08	BCK	75-09-2	2	
4-Methyl-2-pentanone (MIBK)	ND	ug/kg	64.	1.0	04/26/02 00:08	BCK	108-10-1		
Methyl-tert-butyl ether	ND	ug/kg	6.4	1.0	04/26/02 00:08	BCK	1634-04-4		
Naphthalene	ND	ug/kg	6.4	1.0	04/26/02 00:08	BCK	91-20-3		
n-Propylbenzene	ND	ug/kg	6.4	1.0	04/26/02 00:08	BCK	103-65-1		
Styrene	ND	ug/kg	6.4	1.0	04/26/02 00:08	BCK	100-42-5		
1,1,1,2-Tetrachloroethane	ND	ug/kg	6.4	1.0	04/26/02 00:08	BCK	630-20-6		
1,1,2,2-Tetrachloroethane	ND	ug/kg	6.4	1.0	04/26/02 00:08	BCK	79-34-5		
Tetrachloroethene	10.	ug/kg	6.4	1.0	04/26/02 00:08	BCK	127-18-4		
Tetrahydrofuran	ND	ug/kg	64.	1.0	04/26/02 00:08	BCK	109-99-9		
Toluene	ND	ug/kg	6.4	1.0	04/26/02 00:08	BCK	108-88-3		
1,2,3-Trichlorobenzene	ND	ug/kg	6.4	1.0	04/26/02 00:08	BCK	87-61-6		
1,2,4-Trichlorobenzene	ND	ug/kg	6.4	1.0	04/26/02 00:08	BCK	120-82-1		
1,1,1-Trichloroethane	ND	ug/kg	6.4	1.0	04/26/02 00:08	BCK	71-55-6		
1,1,2-Trichloroethane	ND	ug/kg	6.4	1.0	04/26/02 00:08	BCK	79-00-5		
Trichloroethene	12.	ug/kg	6.4	1.0	04/26/02 00:08	BCK	79-01-6		
Trichlorofluoromethane	ND	ug/kg	6.4	1.0	04/26/02 00:08	BCK	75-69-4		
1,2,3-Trichloropropane	ND	ug/kg	6.4	1.0	04/26/02 00:08	BCK	96-18-4		
1,2,4-Trimethylbenzene	ND	ug/kg	6.4	1.0	04/26/02 00:08	BCK	95-63-6		
1,3,5-Trimethylbenzene	ND	ug/kg	6.4	1.0	04/26/02 00:08	BCK	108-67-8		
Vinyl chloride	ND	ug/kg	13.	1.0	04/26/02 00:08	BCK	75-01-4		
m&p-Xylene	ND	ug/kg	13.	1.0	04/26/02 00:08	BCK			
o-Xylene	ND	ug/kg	6.4	1.0	04/26/02 00:08	BCK	95-47-6		
Toluene-d8 (S)	97	%		1.0	04/26/02 00:08	BCK	2037-26-5		
4-Bromofluorobenzene (S)	94	%		1.0	04/26/02 00:08	BCK	460-00-4		
Dibromofluoromethane (S)	90	%		1.0	04/26/02 00:08	BCK			
1,2-Dichloroethane-d4 (S)	85	%		1.0	04/26/02 00:08	BCK	17060-07-0		

Laboratory Certification IDs
NC Wastewater 12
NC Drinking Water 37706
SC 99006

REPORT OF LABORATORY ANALYSIS
This report shall not be reproduced, except in full,
without the written consent of Pace Analytical Services, Inc.

Laboratory Certification IDs
LA Wastewater 04034
VA Drinking Water 213
FL NELAP E87627

Pace Analytical™
www.pacelabs.com

Pace Analytical Services, Inc.
9800 Kincey Avenue, Suite 100
Huntersville, NC 28078
Phone: 704.875.9092
Fax: 704.875.9091

Lab Project Number: 9232215
Client Project ID: NC101047.0002/Worth

Lab Sample No: 922218839 Project Sample Number: 9232215-024 Date Collected: 04/19/02 18:15
Client Sample ID: TRIP BLANK Matrix: Water Date Received: 04/20/02 09:45

Parameters	Results	Units	Report Limit	Dilution	Analyzed	by	CAS No.	Ftnote	Reg Limit
GC/MS Volatiles									
GC/MS VOCs by 8260	Prep/Method: EPA 8260 / EPA 8260								
Acetone	ND	ug/l	100	1.0	04/25/02 21:29	DLK	67-64-1		
Benzene	ND	ug/l	5.0	1.0	04/25/02 21:29	DLK	71-43-2		
Bromobenzene	ND	ug/l	5.0	1.0	04/25/02 21:29	DLK	108-86-1		
Bromochloromethane	ND	ug/l	5.0	1.0	04/25/02 21:29	DLK	74-97-5		
Bromodichloromethane	ND	ug/l	5.0	1.0	04/25/02 21:29	DLK	75-27-4		
Bromoform	ND	ug/l	5.0	1.0	04/25/02 21:29	DLK	75-25-2		
Bromomethane	ND	ug/l	10.	1.0	04/25/02 21:29	DLK	74-83-9		
2-Butanone (MEK)	ND	ug/l	100	1.0	04/25/02 21:29	DLK	78-93-3		
n-Butylbenzene	ND	ug/l	5.0	1.0	04/25/02 21:29	DLK	104-51-8		
sec-Butylbenzene	ND	ug/l	5.0	1.0	04/25/02 21:29	DLK	135-98-8		
tert-Butylbenzene	ND	ug/l	5.0	1.0	04/25/02 21:29	DLK	98-06-6		
Carbon disulfide	ND	ug/l	10.	1.0	04/25/02 21:29	DLK	75-15-0		
Carbon tetrachloride	ND	ug/l	5.0	1.0	04/25/02 21:29	DLK	56-23-5		
Chlorobenzene	ND	ug/l	5.0	1.0	04/25/02 21:29	DLK	108-90-7		
Chloroethane	ND	ug/l	10.	1.0	04/25/02 21:29	DLK	75-00-3		
Chloroform	ND	ug/l	5.0	1.0	04/25/02 21:29	DLK	67-66-3		
Chloromethane	ND	ug/l	10.	1.0	04/25/02 21:29	DLK	74-87-3		
2-Chlorotoluene	ND	ug/l	5.0	1.0	04/25/02 21:29	DLK	95-49-8		
4-Chlorotoluene	ND	ug/l	5.0	1.0	04/25/02 21:29	DLK	106-43-4		
1,2-Dibromo-3-chloropropane	ND	ug/l	5.0	1.0	04/25/02 21:29	DLK	96-12-8		
Dibromochloromethane	ND	ug/l	5.0	1.0	04/25/02 21:29	DLK	124-48-1		
1,2-Dibromoethane (EDB)	ND	ug/l	5.0	1.0	04/25/02 21:29	DLK	106-93-4		
Dibromomethane	ND	ug/l	5.0	1.0	04/25/02 21:29	DLK	74-95-3		
1,2-Dichlorobenzene	ND	ug/l	5.0	1.0	04/25/02 21:29	DLK	95-50-1		
1,3-Dichlorobenzene	ND	ug/l	5.0	1.0	04/25/02 21:29	DLK	541-73-1		
1,4-Dichlorobenzene	ND	ug/l	5.0	1.0	04/25/02 21:29	DLK	106-46-7		
Dichlorodifluoromethane	ND	ug/l	10.	1.0	04/25/02 21:29	DLK	75-71-8		
1,1-Dichloroethane	ND	ug/l	5.0	1.0	04/25/02 21:29	DLK	75-34-3		
1,2-Dichloroethane	ND	ug/l	5.0	1.0	04/25/02 21:29	DLK	107-06-2		
1,1-Dichloroethene	ND	ug/l	5.0	1.0	04/25/02 21:29	DLK	75-35-4		
cis-1,2-Dichloroethene	ND	ug/l	5.0	1.0	04/25/02 21:29	DLK	156-59-2		
trans-1,2-Dichloroethene	ND	ug/l	5.0	1.0	04/25/02 21:29	DLK	156-60-5		
1,2-Dichloropropane	ND	ug/l	5.0	1.0	04/25/02 21:29	DLK	78-87-5		
1,3-Dichloropropane	ND	ug/l	5.0	1.0	04/25/02 21:29	DLK	142-28-9		
2,2-Dichloropropane	ND	ug/l	5.0	1.0	04/25/02 21:29	DLK	594-20-7		
1,1-Dichloropropene	ND	ug/l	5.0	1.0	04/25/02 21:29	DLK	563-58-6		

Laboratory Certification IDs
NC Wastewater 12
NC Drinking Water 37706
SC 99006

REPORT OF LABORATORY ANALYSIS
This report shall not be reproduced, except in full,
without the written consent of Pace Analytical Services, Inc.

Laboratory Certification IDs
LA Wastewater 04034
VA Drinking Water 213
FL NELAP E87627

Pace Analytical™
www.pacelabs.com

Pace Analytical Services, Inc.
9800 Kincey Avenue, Suite 100
Huntersville, NC 28078
Phone: 704.875.9092
Fax: 704.875.9091

Lab Project Number: 9232215
Client Project ID: NC101047.0002/Worth

Lab Sample No: 922218839 Project Sample Number: 9232215-024 Date Collected: 04/19/02 18:15
Client Sample ID: TRIP BLANK Matrix: Water Date Received: 04/20/02 09:45

Parameters	Results	Units	Report Limit	Dilution	Analyzed	by	CAS No.	Ftnote	Reg Limit
Diisopropyl ether	ND	ug/l	5.0	1.0	04/25/02 21:29	DLK	108-20-3		
Ethylbenzene	ND	ug/l	5.0	1.0	04/25/02 21:29	DLK	100-41-4		
Hexachloro-1,3-butadiene	ND	ug/l	5.0	1.0	04/25/02 21:29	DLK	87-68-3		
Isopropylbenzene (Cumene)	ND	ug/l	5.0	1.0	04/25/02 21:29	DLK	98-82-8		
p-Isopropyltoluene	ND	ug/l	5.0	1.0	04/25/02 21:29	DLK	99-87-6		
Methylene chloride	ND	ug/l	5.0	1.0	04/25/02 21:29	DLK	75-09-2		
4-Methyl-2-pentanone (MIBK)	ND	ug/l	50.	1.0	04/25/02 21:29	DLK	108-10-1		
Methyl-tert-butyl ether	ND	ug/l	5.0	1.0	04/25/02 21:29	DLK	1634-04-4		
Naphthalene	ND	ug/l	5.0	1.0	04/25/02 21:29	DLK	91-20-3		
n-Propylbenzene	ND	ug/l	5.0	1.0	04/25/02 21:29	DLK	103-65-1		
Styrene	ND	ug/l	5.0	1.0	04/25/02 21:29	DLK	100-42-5		
1,1,1,2-Tetrachloroethane	ND	ug/l	5.0	1.0	04/25/02 21:29	DLK	630-20-6		
1,1,2,2-Tetrachloroethane	ND	ug/l	5.0	1.0	04/25/02 21:29	DLK	79-34-5		
Tetrachloroethene	ND	ug/l	5.0	1.0	04/25/02 21:29	DLK	127-18-4		
Tetrahydrofuran	ND	ug/l	50.	1.0	04/25/02 21:29	DLK	109-99-9		
Toluene	ND	ug/l	5.0	1.0	04/25/02 21:29	DLK	108-88-3		
1,2,3-Trichlorobenzene	ND	ug/l	5.0	1.0	04/25/02 21:29	DLK	87-61-6		
1,2,4-Trichlorobenzene	ND	ug/l	5.0	1.0	04/25/02 21:29	DLK	120-82-1		
1,1,1-Trichloroethane	ND	ug/l	5.0	1.0	04/25/02 21:29	DLK	71-55-6		
1,1,2-Trichloroethane	ND	ug/l	5.0	1.0	04/25/02 21:29	DLK	79-00-5		
Trichloroethene	ND	ug/l	5.0	1.0	04/25/02 21:29	DLK	79-01-6		
Trichlorofluoromethane	ND	ug/l	10.	1.0	04/25/02 21:29	DLK	75-69-4		
1,2,3-Trichloropropane	ND	ug/l	5.0	1.0	04/25/02 21:29	DLK	96-18-4		
1,2,4-Trimethylbenzene	ND	ug/l	5.0	1.0	04/25/02 21:29	DLK	95-63-6		
1,3,5-Trimethylbenzene	ND	ug/l	5.0	1.0	04/25/02 21:29	DLK	108-67-8		
Vinyl chloride	ND	ug/l	10.	1.0	04/25/02 21:29	DLK	75-01-4		
m&p-Xylene	ND	ug/l	10.	1.0	04/25/02 21:29	DLK			
o-Xylene	ND	ug/l	5.0	1.0	04/25/02 21:29	DLK	95-47-6		
Toluene-d8 (S)	98	%		1.0	04/25/02 21:29	DLK	2037-26-5		
4-Bromofluorobenzene (S)	84	%		1.0	04/25/02 21:29	DLK	460-00-4		
Dibromofluoromethane (S)	107	%		1.0	04/25/02 21:29	DLK			
1,2-Dichloroethane-d4 (S)	108	%		1.0	04/25/02 21:29	DLK	17060-07-0		

Laboratory Certification IDs
NC Wastewater 12
NC Drinking Water 37706
SC 99006

REPORT OF LABORATORY ANALYSIS
This report shall not be reproduced, except in full,
without the written consent of Pace Analytical Services, Inc.

Laboratory Certification IDs
LA Wastewater 04034
VA Drinking Water 213
FL NELAP E87627

Pace Analytical™
www.pacelabs.com

Pace Analytical Services, Inc.
9800 Kincey Avenue, Suite 100
Huntersville, NC 28078
Phone: 704.875.9092
Fax: 704.875.9091

Lab Project Number: 9232215
Client Project ID: NC101047.0002/Worth

PARAMETER FOOTNOTES

ND Not detected at or above adjusted reporting limit
NC Not Calculable
J Estimated concentration above the adjusted method detection limit and below the adjusted reporting limit
(S) Surrogate
[1] Compound concentration exceeds the calibration range of the instrument (CLP E-Flag).
[2] Common laboratory contaminant.

Laboratory Certification IDs
NC Wastewater 12
NC Drinking Water 37706
SC 99006

REPORT OF LABORATORY ANALYSIS
This report shall not be reproduced, except in full,
without the written consent of Pace Analytical Services, Inc.

Laboratory Certification IDs
LA Wastewater 04034
VA Drinking Water 213
FL NELAP E87627

Pace Analytical Services, Inc.
9800 Kincey Avenue, Suite 100
Huntersville, NC 28078
Phone: 704.875.9092
Fax: 704.875.9091

Lab Project Number: 9232215
Client Project ID: NC101047.0002/Worth

QC Batch: 56448 Analysis Method: EPA 8260
QC Batch Method: EPA 8260 Analysis Description: GC/MS VOCs by 8260, low level
Associated Lab Samples: 922218607 922218615 922218623 922218631

METHOD BLANK: 922225693
Associated Lab Samples: 922218607

Parameter	Units	Blank Result	Reporting Limit	Footnotes
Acetone	ug/kg	ND	100	
Benzene	ug/kg	ND	5.0	
Bromobenzene	ug/kg	ND	5.0	
Bromochloromethane	ug/kg	ND	5.0	
Bromodichloromethane	ug/kg	ND	5.0	
Bromoform	ug/kg	ND	5.0	
Bromomethane	ug/kg	ND	10.	
2-Butanone (MEK)	ug/kg	ND	100	
n-Butylbenzene	ug/kg	ND	5.0	
sec-Butylbenzene	ug/kg	ND	5.0	
tert-Butylbenzene	ug/kg	ND	5.0	
Carbon disulfide	ug/kg	ND	5.0	
Carbon tetrachloride	ug/kg	ND	5.0	
Chlorobenzene	ug/kg	ND	5.0	
Chloroethane	ug/kg	ND	10.	
Chloroform	ug/kg	ND	5.0	
Chloromethane	ug/kg	ND	10.	
2-Chlorotoluene	ug/kg	ND	5.0	
4-Chlorotoluene	ug/kg	ND	5.0	
1,2-Dibromo-3-chloropropane	ug/kg	ND	5.0	
Dibromochloromethane	ug/kg	ND	5.0	
1,2-Dibromoethane (EDB)	ug/kg	ND	5.0	
Dibromomethane	ug/kg	ND	5.0	
1,2-Dichlorobenzene	ug/kg	ND	5.0	
1,3-Dichlorobenzene	ug/kg	ND	5.0	
1,4-Dichlorobenzene	ug/kg	ND	5.0	
Dichlorodifluoromethane	ug/kg	ND	10.	
1,1-Dichloroethane	ug/kg	ND	5.0	
1,2-Dichloroethane	ug/kg	ND	5.0	
1,1-Dichloroethene	ug/kg	ND	5.0	

Laboratory Certification IDs
NC Wastewater 12
NC Drinking Water 37706
SC 99006

REPORT OF LABORATORY ANALYSIS
This report shall not be reproduced, except in full,
without the written consent of Pace Analytical Services, Inc.

Laboratory Certification IDs
LA Wastewater 04034
VA Drinking Water 213
FL NELAP E87627

Pace Analytical™
www.pacelabs.com

Pace Analytical Services, Inc.
9800 Kincey Avenue, Suite 100
Huntersville, NC 28078
Phone: 704.875.9092
Fax: 704.875.9091

QUALITY CONTROL DATA

Lab Project Number: 9232215
Client Project ID: NC101047.0002/Worth

METHOD BLANK: 922225693
Associated Lab Samples: 922218607

Parameter	Units	Blank Result	Reporting Limit	Footnotes
cis-1,2-Dichloroethene	ug/kg	ND	5.0	
trans-1,2-Dichloroethene	ug/kg	ND	5.0	
1,2-Dichloropropane	ug/kg	ND	5.0	
1,3-Dichloropropane	ug/kg	ND	5.0	
2,2-Dichloropropane	ug/kg	ND	5.0	
1,1-Dichloropropene	ug/kg	ND	5.0	
Diisopropyl ether	ug/kg	ND	5.0	
Ethylbenzene	ug/kg	ND	5.0	
Hexachloro-1,3-butadiene	ug/kg	ND	5.0	
Isopropylbenzene (Cumene)	ug/kg	ND	5.0	
p-Isopropyltoluene	ug/kg	ND	5.0	
Methylene chloride	ug/kg	ND	5.0	
4-Methyl-2-pentanone (MIBK)	ug/kg	ND	50.	
Methyl-tert-butyl ether	ug/kg	ND	5.0	
Naphthalene	ug/kg	ND	5.0	
n-Propylbenzene	ug/kg	ND	5.0	
Styrene	ug/kg	ND	5.0	
1,1,1,2-Tetrachloroethane	ug/kg	ND	5.0	
1,1,2,2-Tetrachloroethane	ug/kg	ND	5.0	
Tetrachloroethene	ug/kg	ND	5.0	
Tetrahydrofuran	ug/kg	ND	50.	
Toluene	ug/kg	ND	5.0	
1,2,3-Trichlorobenzene	ug/kg	ND	5.0	
1,2,4-Trichlorobenzene	ug/kg	ND	5.0	
1,1,1-Trichloroethane	ug/kg	ND	5.0	
1,1,2-Trichloroethane	ug/kg	ND	5.0	
Trichloroethene	ug/kg	ND	5.0	
Trichlorofluoromethane	ug/kg	ND	5.0	
1,2,3-Trichloropropane	ug/kg	ND	5.0	
1,2,4-Trimethylbenzene	ug/kg	ND	5.0	
1,3,5-Trimethylbenzene	ug/kg	ND	5.0	
Vinyl chloride	ug/kg	ND	10.	
m&p-Xylene	ug/kg	ND	10.	
o-Xylene	ug/kg	ND	5.0	
Toluene-d8 (S)	%	99		

Laboratory Certification IDs
NC Wastewater 12
NC Drinking Water 37706
SC 99006

REPORT OF LABORATORY ANALYSIS
This report shall not be reproduced, except in full,
without the written consent of Pace Analytical Services, Inc.

Laboratory Certification IDs
LA Wastewater 04034
VA Drinking Water 213
FL NELAP E87627

Pace Analytical™
www.pacelabs.com

Pace Analytical Services, Inc.
9800 Kincey Avenue, Suite 100
Huntersville, NC 28078
Phone: 704.875.9092
Fax: 704.875.9091

QUALITY CONTROL DATA

Lab Project Number: 9232215
Client Project ID: NC101047.0002/Worth

METHOD BLANK: 922225693
Associated Lab Samples: 922218607

Parameter	Units	Blank Result	Reporting Limit	Footnotes
4-Bromofluorobenzene (S)	%	92		
Dibromofluoromethane (S)	%	104		
1,2-Dichloroethane-d4 (S)	%	108		

METHOD BLANK: 922228655
Associated Lab Samples: 922218615 922218623 922218631

Parameter	Units	Blank Result	Reporting Limit	Footnotes
Acetone	ug/kg	ND	100	
Benzene	ug/kg	ND	5.0	
Bromobenzene	ug/kg	ND	5.0	
Bromochloromethane	ug/kg	ND	5.0	
Bromodichloromethane	ug/kg	ND	5.0	
Bromoform	ug/kg	ND	5.0	
Bromomethane	ug/kg	ND	10.	
2-Butanone (MEK)	ug/kg	ND	100	
n-Butylbenzene	ug/kg	ND	5.0	
sec-Butylbenzene	ug/kg	ND	5.0	
tert-Butylbenzene	ug/kg	ND	5.0	
Carbon disulfide	ug/kg	ND	5.0	
Carbon tetrachloride	ug/kg	ND	5.0	
Chlorobenzene	ug/kg	ND	5.0	
Chloroethane	ug/kg	ND	10.	
Chloroform	ug/kg	ND	5.0	
Chloromethane	ug/kg	ND	10.	
2-Chlorotoluene	ug/kg	ND	5.0	
4-Chlorotoluene	ug/kg	ND	5.0	
1,2-Dibromo-3-chloropropane	ug/kg	ND	5.0	
Dibromochloromethane	ug/kg	ND	5.0	
1,2-Dibromoethane (EDB)	ug/kg	ND	5.0	
Dibromomethane	ug/kg	ND	5.0	
1,2-Dichlorobenzene	ug/kg	ND	5.0	
1,3-Dichlorobenzene	ug/kg	ND	5.0	

Laboratory Certification IDs
NC Wastewater 12
NC Drinking Water 37706
SC 99006

REPORT OF LABORATORY ANALYSIS
This report shall not be reproduced, except in full,
without the written consent of Pace Analytical Services, Inc.

Laboratory Certification IDs
LA Wastewater 04034
VA Drinking Water 213
FL NELAP E87627

Pace Analytical™
www.pacelabs.com

Pace Analytical Services, Inc.
9800 Kincey Avenue, Suite 100
Huntersville, NC 28078
Phone: 704.875.9092
Fax: 704.875.9091

QUALITY CONTROL DATA

Lab Project Number: 9232215
Client Project ID: NC101047.0002/Worth

METHOD BLANK: 922228655
Associated Lab Samples: 922218615 922218623 922218631

Parameter	Units	Blank Result	Reporting Limit	Footnotes
1,4-Dichlorobenzene	ug/kg	ND	5.0	
Dichlorodifluoromethane	ug/kg	ND	10.	
1,1-Dichloroethane	ug/kg	ND	5.0	
1,2-Dichloroethane	ug/kg	ND	5.0	
1,1-Dichloroethene	ug/kg	ND	5.0	
cis-1,2-Dichloroethene	ug/kg	ND	5.0	
trans-1,2-Dichloroethene	ug/kg	ND	5.0	
1,2-Dichloropropane	ug/kg	ND	5.0	
1,3-Dichloropropane	ug/kg	ND	5.0	
2,2-Dichloropropane	ug/kg	ND	5.0	
1,1-Dichloropropene	ug/kg	ND	5.0	
Diisopropyl ether	ug/kg	ND	5.0	
Ethylbenzene	ug/kg	ND	5.0	
Hexachloro-1,3-butadiene	ug/kg	ND	5.0	
Isopropylbenzene (Cumene)	ug/kg	ND	5.0	
p-Isopropyltoluene	ug/kg	ND	5.0	
Methylene chloride	ug/kg	ND	5.0	
4-Methyl-2-pentanone (MIBK)	ug/kg	ND	50.	
Methyl-tert-butyl ether	ug/kg	ND	5.0	
Naphthalene	ug/kg	ND	5.0	
n-Propylbenzene	ug/kg	ND	5.0	
Styrene	ug/kg	ND	5.0	
1,1,1,2-Tetrachloroethane	ug/kg	ND	5.0	
1,1,2,2-Tetrachloroethane	ug/kg	ND	5.0	
Tetrachloroethene	ug/kg	ND	5.0	
Tetrahydrofuran	ug/kg	ND	50.	
Toluene	ug/kg	ND	5.0	
1,2,3-Trichlorobenzene	ug/kg	ND	5.0	
1,2,4-Trichlorobenzene	ug/kg	ND	5.0	
1,1,1-Trichloroethane	ug/kg	ND	5.0	
1,1,2-Trichloroethane	ug/kg	ND	5.0	
Trichloroethene	ug/kg	ND	5.0	
Trichlorofluoromethane	ug/kg	ND	5.0	
1,2,3-Trichloropropane	ug/kg	ND	5.0	
1,2,4-Trimethylbenzene	ug/kg	ND	5.0	

Laboratory Certification IDs
NC Wastewater 12
NC Drinking Water 37706
SC 99006

REPORT OF LABORATORY ANALYSIS
This report shall not be reproduced, except in full,
without the written consent of Pace Analytical Services, Inc.

Laboratory Certification IDs
LA Wastewater 04034
VA Drinking Water 213
FL NELAP E87627

Pace Analytical™
www.pacelabs.com

Pace Analytical Services, Inc.
9800 Kincey Avenue, Suite 100
Huntersville, NC 28078
Phone: 704.875.9092
Fax: 704.875.9091

QUALITY CONTROL DATA

Lab Project Number: 9232215
Client Project ID: NC101047.0002/Worth

METHOD BLANK: 922228655
Associated Lab Samples: 922218615 922218623 922218631

Parameter	Units	Blank Result	Reporting Limit	Footnotes
1,3,5-Trimethylbenzene	ug/kg	ND	5.0	
Vinyl chloride	ug/kg	ND	10.	
m&p-Xylene	ug/kg	ND	10.	
o-Xylene	ug/kg	ND	5.0	
Toluene-d8 (S)	%	98		
4-Bromofluorobenzene (S)	%	90		
Dibromofluoromethane (S)	%	94		
1,2-Dichloroethane-d4 (S)	%	93		

LABORATORY CONTROL SAMPLE & LCSD: 922225701 922225719

Parameter	Units	Spike Conc.	LCS Result	LCSD Result	LCS % Rec	LCSD % Rec	RPD	Footnotes
Acetone	ug/kg	100	80.45	91.15	80	91	12	
Benzene	ug/kg	50	46.25	47.39	92	95	2	
Bromobenzene	ug/kg	50	54.50	57.20	109	114	5	
Bromochloromethane	ug/kg	50	49.56	51.53	99	103	4	
Bromodichloromethane	ug/kg	50	54.38	56.43	109	113	4	
Bromoform	ug/kg	50	59.80	61.51	120	123	3	
Bromomethane	ug/kg	50	26.80	40.76	54	82	41	1
2-Butanone (MEK)	ug/kg	100	99.29	106.2	99	106	7	
n-Butylbenzene	ug/kg	50	52.79	54.82	106	110	4	
sec-Butylbenzene	ug/kg	50	54.09	55.53	108	111	3	
tert-Butylbenzene	ug/kg	50	54.58	55.71	109	111	2	
Carbon disulfide	ug/kg	100	102.3	105.8	102	106	3	
Carbon tetrachloride	ug/kg	50	46.83	48.04	94	96	3	
Chlorobenzene	ug/kg	50	53.53	53.96	107	108	1	
Chloroethane	ug/kg	50	39.08	44.48	78	89	13	
Chloroform	ug/kg	50	49.02	50.02	98	100	2	
Chloromethane	ug/kg	50	42.01	38.59	84	77	8	
2-Chlorotoluene	ug/kg	50	55.59	49.81	111	100	11	
4-Chlorotoluene	ug/kg	50	52.86	54.43	106	109	3	
1,2-Dibromo-3-chloropropane	ug/kg	50	67.44	64.18	135	128	5	2
Dibromochloromethane	ug/kg	50	59.67	61.15	119	122	2	

Laboratory Certification IDs
NC Wastewater 12
NC Drinking Water 37706
SC 99006

REPORT OF LABORATORY ANALYSIS
This report shall not be reproduced, except in full,
without the written consent of Pace Analytical Services, Inc.

Laboratory Certification IDs
LA Wastewater 04034
VA Drinking Water 213
FL NELAP E87627

Pace Analytical™
www.pacelabs.com

Pace Analytical Services, Inc.
9800 Kincey Avenue, Suite 100
Huntersville, NC 28078
Phone: 704.875.9092
Fax: 704.875.9091

QUALITY CONTROL DATA

Lab Project Number: 9232215
Client Project ID: NC101047.0002/Worth

LABORATORY CONTROL SAMPLE & LCSD: 922225701 922225719

Parameter	Units	Spike Conc.	LCS Result	LCSD Result	LCS % Rec	LCSD % Rec	RPD	Footnotes
1,2-Dibromoethane (EDB)	ug/kg	50	56.30	57.22	113	114	2	
Dibromomethane	ug/kg	50	52.50	53.16	105	106	1	
1,2-Dichlorobenzene	ug/kg	50	56.40	58.01	113	116	3	
1,3-Dichlorobenzene	ug/kg	50	53.98	56.02	108	112	4	
1,4-Dichlorobenzene	ug/kg	50	53.91	55.49	108	111	3	
Dichlorodifluoromethane	ug/kg	50	21.81	22.63	44	45	4	3,3
1,1-Dichloroethane	ug/kg	50	47.54	48.39	95	97	2	
1,2-Dichloroethane	ug/kg	50	50.45	52.09	101	104	3	
1,1-Dichloroethene	ug/kg	50	46.99	49.00	94	98	4	
cis-1,2-Dichloroethene	ug/kg	50	48.44	49.68	97	99	3	
trans-1,2-Dichloroethene	ug/kg	50	46.99	49.00	94	98	4	
1,2-Dichloropropane	ug/kg	50	50.24	33.16	100	66	41	1
1,3-Dichloropropane	ug/kg	50	55.48	55.17	111	110	1	
2,2-Dichloropropane	ug/kg	50	46.78	47.96	94	96	2	
1,1-Dichloropropene	ug/kg	50	46.20	47.49	92	95	3	
Diisopropyl ether	ug/kg	50	54.47	57.11	109	114	5	
Ethylbenzene	ug/kg	50	53.39	54.46	107	109	2	
Hexachloro-1,3-butadiene	ug/kg	50	54.80	55.36	110	111	1	
Isopropylbenzene (Cumene)	ug/kg	50	56.20	57.14	112	114	2	
p-Isopropyltoluene	ug/kg	50	53.97	56.15	108	112	4	
Methylene chloride	ug/kg	50	52.39	56.56	105	113	8	
4-Methyl-2-pentanone (MIBK)	ug/kg	100	113.2	115.9	113	116	2	
Methyl-tert-butyl ether	ug/kg	50	57.90	61.51	116	123	6	
Naphthalene	ug/kg	50	63.07	58.56	126	117	7	
n-Propylbenzene	ug/kg	50	53.50	55.76	107	112	4	
Styrene	ug/kg	50	53.65	55.97	107	112	4	
1,1,1,2-Tetrachloroethane	ug/kg	50	57.23	58.85	114	118	3	
1,1,2,2-Tetrachloroethane	ug/kg	50	62.69	62.84	125	126	0	2,2
Tetrachloroethene	ug/kg	50	47.46	48.80	95	98	3	
Tetrahydrofuran	ug/kg	500	510.8	520.3	102	104	2	
Toluene	ug/kg	50	49.09	50.14	98	100	2	
1,2,3-Trichlorobenzene	ug/kg	50	55.46	54.56	111	109	2	
1,2,4-Trichlorobenzene	ug/kg	50	55.46	54.56	111	109	2	
1,1,1-Trichloroethane	ug/kg	50	47.88	49.29	96	99	3	
1,1,2-Trichloroethane	ug/kg	50	55.52	57.93	111	116	4	
Trichloroethene	ug/kg	50	48.02	49.66	96	99	3	

Laboratory Certification IDs
NC Wastewater 12
NC Drinking Water 37706
SC 99006

REPORT OF LABORATORY ANALYSIS
This report shall not be reproduced, except in full,
without the written consent of Pace Analytical Services, Inc.

Laboratory Certification IDs
LA Wastewater 04034
VA Drinking Water 213
FL NELAP E87627

Pace Analytical™
www.pacelabs.com

Pace Analytical Services, Inc.
9800 Kincey Avenue, Suite 100
Huntersville, NC 28078
Phone: 704.875.9092
Fax: 704.875.9091

QUALITY CONTROL DATA

Lab Project Number: 9232215
Client Project ID: NC101047.0002/Worth

LABORATORY CONTROL SAMPLE & LCSD: 922225701 922225719

Parameter	Units	Spike Conc.	LCS Result	LCSD Result	LCS % Rec	LCSD % Rec	RPD	Footnotes
Trichlorofluoromethane	ug/kg	50	36.51	39.32	73	79	7	
1,2,3-Trichloropropane	ug/kg	50	60.59	61.01	121	122	1	
1,2,4-Trimethylbenzene	ug/kg	50	53.76	55.02	108	110	2	
1,3,5-Trimethylbenzene	ug/kg	50	54.07	55.78	108	112	3	
Vinyl chloride	ug/kg	50	38.27	39.86	76	80	4	
m&p-Xylene	ug/kg	100	105.4	107.9	105	108	2	
o-Xylene	ug/kg	50	54.75	56.07	110	112	2	
Toluene-d8 (S)					99	100		
4-Bromofluorobenzene (S)					102	101		
Dibromofluoromethane (S)					103	102		
1,2-Dichloroethane-d4 (S)					101	102		

MATRIX SPIKE & MATRIX SPIKE DUPLICATE: 922225727 922225735

Parameter	Units	922221775 Result	Spike Conc.	MS Result	MSD Result	MS % Rec	MSD % Rec	RPD	Footnotes
Benzene	ug/kg	0	60.66	57.56	58.88	95	97	2	
Chlorobenzene	ug/kg	0	60.66	64.76	67.14	107	111	4	
1,1-Dichloroethene	ug/kg	0	60.66	70.65	70.64	116	116	0	
Toluene	ug/kg	0	60.66	61.63	62.91	102	104	2	
Trichloroethene	ug/kg	0	60.66	60.77	61.40	100	101	1	
Toluene-d8 (S)						100	100		
4-Bromofluorobenzene (S)						98	99		
Dibromofluoromethane (S)						101	99		
1,2-Dichloroethane-d4 (S)						98	98		

SAMPLE DUPLICATE: 922225743

Parameter	Units	922221783 Result	DUP Result	RPD	Footnotes
Acetone	ug/kg	ND	ND	NC	
Benzene	ug/kg	ND	ND	NC	
Bromobenzene	ug/kg	ND	ND	NC	
Bromochloromethane	ug/kg	ND	ND	NC	

Laboratory Certification IDs
NC Wastewater 12
NC Drinking Water 37706
SC 99006

REPORT OF LABORATORY ANALYSIS
This report shall not be reproduced, except in full,
without the written consent of Pace Analytical Services, Inc.

Laboratory Certification IDs
LA Wastewater 04034
VA Drinking Water 213
FL NELAP E87627

Pace Analytical™
www.pacelabs.com

QUALITY CONTROL DATA

Pace Analytical Services, Inc.
9800 Kincey Avenue, Suite 100
Huntersville, NC 28078
Phone: 704.875.9092
Fax: 704.875.9091

Lab Project Number: 9232215
Client Project ID: NC101047.0002/Worth

SAMPLE DUPLICATE: 922225743

Parameter	Units	922221783 Result	DUP Result	RPD	Footnotes
Bromodichloromethane	ug/kg	ND	ND	NC	
Bromoform	ug/kg	ND	ND	NC	
Bromomethane	ug/kg	ND	ND	NC	
2-Butanone (MEK)	ug/kg	ND	ND	NC	
n-Butylbenzene	ug/kg	ND	ND	NC	
sec-Butylbenzene	ug/kg	ND	ND	NC	
tert-Butylbenzene	ug/kg	ND	ND	NC	
Carbon disulfide	ug/kg	ND	ND	NC	
Carbon tetrachloride	ug/kg	ND	ND	NC	
Chlorobenzene	ug/kg	ND	ND	NC	
Chloroethane	ug/kg	ND	ND	NC	
Chloroform	ug/kg	ND	ND	NC	
Chloromethane	ug/kg	ND	ND	NC	
2-Chlorotoluene	ug/kg	ND	ND	NC	
4-Chlorotoluene	ug/kg	ND	ND	NC	
1,2-Dibromo-3-chloropropane	ug/kg	ND	ND	NC	
Dibromochloromethane	ug/kg	ND	ND	NC	
1,2-Dibromoethane (EDB)	ug/kg	ND	ND	NC	
Dibromomethane	ug/kg	ND	ND	NC	
1,2-Dichlorobenzene	ug/kg	ND	ND	NC	
1,3-Dichlorobenzene	ug/kg	ND	ND	NC	
1,4-Dichlorobenzene	ug/kg	ND	ND	NC	
Dichlorodifluoromethane	ug/kg	ND	ND	NC	
1,1-Dichloroethane	ug/kg	ND	ND	NC	
1,2-Dichloroethane	ug/kg	ND	ND	NC	
1,1-Dichloroethene	ug/kg	ND	ND	NC	
cis-1,2-Dichloroethene	ug/kg	ND	ND	NC	
trans-1,2-Dichloroethene	ug/kg	ND	ND	NC	
1,2-Dichloropropane	ug/kg	ND	ND	NC	
1,3-Dichloropropane	ug/kg	ND	ND	NC	
2,2-Dichloropropane	ug/kg	ND	ND	NC	
1,1-Dichloropropene	ug/kg	ND	ND	NC	
Diisopropyl ether	ug/kg	ND	ND	NC	
Ethylbenzene	ug/kg	ND	ND	NC	
Hexachloro-1,3-butadiene	ug/kg	ND	ND	NC	
Isopropylbenzene (Cumene)	ug/kg	ND	ND	NC	

Laboratory Certification IDs
NC Wastewater 12
NC Drinking Water 37706
SC 99006

REPORT OF LABORATORY ANALYSIS
This report shall not be reproduced, except in full,
without the written consent of Pace Analytical Services, Inc.

Laboratory Certification IDs
LA Wastewater 04034
VA Drinking Water 213
FL NELAP E87627

Pace Analytical™
www.pacelabs.com

Pace Analytical Services, Inc.
9800 Kincey Avenue, Suite 100
Huntersville, NC 28078
Phone: 704.875.9092
Fax: 704.875.9091

QUALITY CONTROL DATA

Lab Project Number: 9232215
Client Project ID: NC101047.0002/Worth

SAMPLE DUPLICATE: 922225743

Parameter	Units	922221783 Result	DUP Result	RPD	Footnotes
p-Isopropyltoluene	ug/kg	ND	ND	NC	
Methylene chloride	ug/kg	ND	ND	NC	
4-Methyl-2-pentanone (MIBK)	ug/kg	ND	ND	NC	
Methyl-tert-butyl ether	ug/kg	ND	ND	NC	
Naphthalene	ug/kg	ND	ND	NC	
n-Propylbenzene	ug/kg	ND	ND	NC	
Styrene	ug/kg	ND	ND	NC	
1,1,1,2-Tetrachloroethane	ug/kg	ND	ND	NC	
1,1,2,2-Tetrachloroethane	ug/kg	ND	ND	NC	
Tetrachloroethene	ug/kg	ND	ND	NC	
Tetrahydrofuran	ug/kg	ND	ND	NC	
Toluene	ug/kg	ND	ND	NC	
1,2,3-Trichlorobenzene	ug/kg	ND	ND	NC	
1,2,4-Trichlorobenzene	ug/kg	ND	ND	NC	
1,1,1-Trichloroethane	ug/kg	ND	ND	NC	
1,1,2-Trichloroethane	ug/kg	ND	ND	NC	
Trichloroethene	ug/kg	ND	ND	NC	
Trichlorofluoromethane	ug/kg	ND	ND	NC	
1,2,3-Trichloropropane	ug/kg	ND	ND	NC	
1,2,4-Trimethylbenzene	ug/kg	ND	ND	NC	
1,3,5-Trimethylbenzene	ug/kg	ND	ND	NC	
Vinyl chloride	ug/kg	ND	ND	NC	
m&p-Xylene	ug/kg	ND	ND	NC	
o-Xylene	ug/kg	ND	ND	NC	
Toluene-d8 (S)	%	98	97		
4-Bromofluorobenzene (S)	%	92	90		
Dibromofluoromethane (S)	%	101	102		
1,2-Dichloroethane-d4 (S)	%	106	107		

Laboratory Certification IDs
NC Wastewater 12
NC Drinking Water 37706
SC 99006

REPORT OF LABORATORY ANALYSIS
This report shall not be reproduced, except in full,
without the written consent of Pace Analytical Services, Inc.

Laboratory Certification IDs
LA Wastewater 04034
VA Drinking Water 213
FL NELAP E87627

Pace Analytical™
www.pacelabs.com

Pace Analytical Services, Inc.
9800 Kincey Avenue, Suite 100
Huntersville, NC 28078
Phone: 704.875.9092
Fax: 704.875.9091

QUALITY CONTROL DATA

Lab Project Number: 9232215
Client Project ID: NC101047.0002/Worth

QC Batch: 56521 — Analysis Method: EPA 8260
QC Batch Method: EPA 8260 — Analysis Description: GC/MS VOCs by 8260, low level
Associated Lab Samples: 922218649 922218656 922218664 922218672 922218680 922218698 922218706 922218714 922218722 922218730 922218748 922218755 922218763 922218771 922218789 922218797 922218805 922218813 922218821

METHOD BLANK: 922229828
Associated Lab Samples: 922218649 922218664 922218672 922218680 922218698 922218706 922218714 922218722 922218730 922218748 922218755 922218771

Parameter	Units	Blank Result	Reporting Limit	Footnotes
Acetone	ug/kg	ND	100	
Benzene	ug/kg	ND	5.0	
Bromobenzene	ug/kg	ND	5.0	
Bromochloromethane	ug/kg	ND	5.0	
Bromodichloromethane	ug/kg	ND	5.0	
Bromoform	ug/kg	ND	5.0	
Bromomethane	ug/kg	ND	10.	
2-Butanone (MEK)	ug/kg	ND	100	
n-Butylbenzene	ug/kg	ND	5.0	
sec-Butylbenzene	ug/kg	ND	5.0	
tert-Butylbenzene	ug/kg	ND	5.0	
Carbon disulfide	ug/kg	ND	5.0	
Carbon tetrachloride	ug/kg	ND	5.0	
Chlorobenzene	ug/kg	ND	5.0	
Chloroethane	ug/kg	ND	10.	
Chloroform	ug/kg	ND	5.0	
Chloromethane	ug/kg	ND	10.	
2-Chlorotoluene	ug/kg	ND	5.0	
4-Chlorotoluene	ug/kg	ND	5.0	
1,2-Dibromo-3-chloropropane	ug/kg	ND	5.0	
Dibromochloromethane	ug/kg	ND	5.0	
1,2-Dibromoethane (EDB)	ug/kg	ND	5.0	
Dibromomethane	ug/kg	ND	5.0	
1,2-Dichlorobenzene	ug/kg	ND	5.0	
1,3-Dichlorobenzene	ug/kg	ND	5.0	
1,4-Dichlorobenzene	ug/kg	ND	5.0	

Laboratory Certification IDs
NC Wastewater 12
NC Drinking Water 37706
SC 99006

REPORT OF LABORATORY ANALYSIS
This report shall not be reproduced, except in full,
without the written consent of Pace Analytical Services, Inc.

Laboratory Certification IDs
LA Wastewater 04034
VA Drinking Water 213
FL NELAP E87627

Pace Analytical™
www.pacelabs.com

Pace Analytical Services, Inc.
9800 Kincey Avenue, Suite 100
Huntersville, NC 28078
Phone: 704.875.9092
Fax: 704.875.9091

QUALITY CONTROL DATA

Lab Project Number: 9232215
Client Project ID: NC101047.0002/Worth

METHOD BLANK: 922229828
Associated Lab Samples: 922218649 922218664 922218672 922218680 922218698 922218706 922218714 922218722 922218730 922218748 922218755 922218771

Parameter	Units	Blank Result	Reporting Limit	Footnotes
Dichlorodifluoromethane	ug/kg	ND	10.	
1,1-Dichloroethane	ug/kg	ND	5.0	
1,2-Dichloroethane	ug/kg	ND	5.0	
1,1-Dichloroethene	ug/kg	ND	5.0	
cis-1,2-Dichloroethene	ug/kg	ND	5.0	
trans-1,2-Dichloroethene	ug/kg	ND	5.0	
1,2-Dichloropropane	ug/kg	ND	5.0	
1,3-Dichloropropane	ug/kg	ND	5.0	
2,2-Dichloropropane	ug/kg	ND	5.0	
1,1-Dichloropropene	ug/kg	ND	5.0	
Diisopropyl ether	ug/kg	ND	5.0	
Ethylbenzene	ug/kg	ND	5.0	
Hexachloro-1,3-butadiene	ug/kg	ND	5.0	
Isopropylbenzene (Cumene)	ug/kg	ND	5.0	
p-Isopropyltoluene	ug/kg	ND	5.0	
Methylene chloride	ug/kg	ND	5.0	
4-Methyl-2-pentanone (MIBK)	ug/kg	ND	50.	
Methyl-tert-butyl ether	ug/kg	ND	5.0	
Naphthalene	ug/kg	ND	5.0	
n-Propylbenzene	ug/kg	ND	5.0	
Styrene	ug/kg	ND	5.0	
1,1,1,2-Tetrachloroethane	ug/kg	ND	5.0	
1,1,2,2-Tetrachloroethane	ug/kg	ND	5.0	
Tetrachloroethene	ug/kg	ND	5.0	
Tetrahydrofuran	ug/kg	ND	50.	
Toluene	ug/kg	ND	5.0	
1,2,3-Trichlorobenzene	ug/kg	ND	5.0	
1,2,4-Trichlorobenzene	ug/kg	ND	5.0	
1,1,1-Trichloroethane	ug/kg	ND	5.0	
1,1,2-Trichloroethane	ug/kg	ND	5.0	
Trichloroethene	ug/kg	ND	5.0	
Trichlorofluoromethane	ug/kg	ND	5.0	
1,2,3-Trichloropropane	ug/kg	ND	5.0	
1,2,4-Trimethylbenzene	ug/kg	ND	5.0	

Laboratory Certification IDs
NC Wastewater 12
NC Drinking Water 37706
SC 99006

REPORT OF LABORATORY ANALYSIS
This report shall not be reproduced, except in full,
without the written consent of Pace Analytical Services, Inc.

Laboratory Certification IDs
LA Wastewater 04034
VA Drinking Water 213
FL NELAP E87627

Pace Analytical™
www.pacelabs.com

Pace Analytical Services, Inc.
9800 Kincey Avenue, Suite 100
Huntersville, NC 28078
Phone: 704.875.9092
Fax: 704.875.9091

QUALITY CONTROL DATA

Lab Project Number: 9232215
Client Project ID: NC101047.0002/Worth

METHOD BLANK: 922229828
Associated Lab Samples: 922218649 922218664 922218672 922218680 922218698 922218706 922218714 922218722 922218730 922218748 922218755 922218771

Parameter	Units	Blank Result	Reporting Limit	Footnotes
1,3,5-Trimethylbenzene	ug/kg	ND	5.0	
Vinyl chloride	ug/kg	ND	10.	
m&p-Xylene	ug/kg	ND	10.	
o-Xylene	ug/kg	ND	5.0	
Toluene-d8 (S)	%	99		
4-Bromofluorobenzene (S)	%	92		
Dibromofluoromethane (S)	%	99		
1,2-Dichloroethane-d4 (S)	%	96		

METHOD BLANK: 922231634
Associated Lab Samples: 922218656 922218763 922218789 922218797 922218805 922218813 922218821

Parameter	Units	Blank Result	Reporting Limit	Footnotes
Acetone	ug/kg	ND	100	
Benzene	ug/kg	ND	5.0	
Bromobenzene	ug/kg	ND	5.0	
Bromochloromethane	ug/kg	ND	5.0	
Bromodichloromethane	ug/kg	ND	5.0	
Bromoform	ug/kg	ND	5.0	
Bromomethane	ug/kg	ND	10.	
2-Butanone (MEK)	ug/kg	ND	100	
n-Butylbenzene	ug/kg	ND	5.0	
sec-Butylbenzene	ug/kg	ND	5.0	
tert-Butylbenzene	ug/kg	ND	5.0	
Carbon disulfide	ug/kg	ND	5.0	
Carbon tetrachloride	ug/kg	ND	5.0	
Chlorobenzene	ug/kg	ND	5.0	
Chloroethane	ug/kg	ND	10.	
Chloroform	ug/kg	ND	5.0	
Chloromethane	ug/kg	ND	10.	
2-Chlorotoluene	ug/kg	ND	5.0	
4-Chlorotoluene	ug/kg	ND	5.0	

Laboratory Certification IDs
NC Wastewater 12
NC Drinking Water 37706
SC 99006

REPORT OF LABORATORY ANALYSIS
This report shall not be reproduced, except in full,
without the written consent of Pace Analytical Services, Inc.

Laboratory Certification IDs
LA Wastewater 04034
VA Drinking Water 213
FL NELAP E87627

Pace Analytical™
www.pacelabs.com

Pace Analytical Services, Inc.
9800 Kincey Avenue, Suite 100
Huntersville, NC 28078
Phone: 704.875.9092
Fax: 704.875.9091

QUALITY CONTROL DATA

Lab Project Number: 9232215
Client Project ID: NC101047.0002/Worth

METHOD BLANK: 922231634
Associated Lab Samples: 922218656 922218763 922218789 922218797 922218805 922218813 922218821

Parameter	Units	Blank Result	Reporting Limit	Footnotes
1,2-Dibromo-3-chloropropane	ug/kg	ND	5.0	
Dibromochloromethane	ug/kg	ND	5.0	
1,2-Dibromoethane (EDB)	ug/kg	ND	5.0	
Dibromomethane	ug/kg	ND	5.0	
1,2-Dichlorobenzene	ug/kg	ND	5.0	
1,3-Dichlorobenzene	ug/kg	ND	5.0	
1,4-Dichlorobenzene	ug/kg	ND	5.0	
Dichlorodifluoromethane	ug/kg	ND	10.	
1,1-Dichloroethane	ug/kg	ND	5.0	
1,2-Dichloroethane	ug/kg	ND	5.0	
1,1-Dichloroethene	ug/kg	ND	5.0	
cis-1,2-Dichloroethene	ug/kg	ND	5.0	
trans-1,2-Dichloroethene	ug/kg	ND	5.0	
1,2-Dichloropropane	ug/kg	ND	5.0	
1,3-Dichloropropane	ug/kg	ND	5.0	
2,2-Dichloropropane	ug/kg	ND	5.0	
1,1-Dichloropropene	ug/kg	ND	5.0	
Diisopropyl ether	ug/kg	ND	5.0	
Ethylbenzene	ug/kg	ND	5.0	
Hexachloro-1,3-butadiene	ug/kg	ND	5.0	
Isopropylbenzene (Cumene)	ug/kg	ND	5.0	
p-Isopropyltoluene	ug/kg	ND	5.0	
Methylene chloride	ug/kg	11.	5.0	4
4-Methyl-2-pentanone (MIBK)	ug/kg	ND	50.	
Methyl-tert-butyl ether	ug/kg	ND	5.0	
Naphthalene	ug/kg	ND	5.0	
n-Propylbenzene	ug/kg	ND	5.0	
Styrene	ug/kg	ND	5.0	
1,1,1,2-Tetrachloroethane	ug/kg	ND	5.0	
1,1,2,2-Tetrachloroethane	ug/kg	ND	5.0	
Tetrachloroethene	ug/kg	ND	5.0	
Tetrahydrofuran	ug/kg	ND	50.	
Toluene	ug/kg	ND	5.0	
1,2,3-Trichlorobenzene	ug/kg	ND	5.0	
1,2,4-Trichlorobenzene	ug/kg	ND	5.0	

Laboratory Certification IDs
NC Wastewater 12
NC Drinking Water 37706
SC 99006

REPORT OF LABORATORY ANALYSIS
This report shall not be reproduced, except in full,
without the written consent of Pace Analytical Services, Inc.

Laboratory Certification IDs
LA Wastewater 04034
VA Drinking Water 213
FL NELAP E87627

Pace Analytical™
www.pacelabs.com

Pace Analytical Services, Inc.
9800 Kincey Avenue, Suite 100
Huntersville, NC 28078
Phone: 704.875.9092
Fax: 704.875.9091

QUALITY CONTROL DATA

Lab Project Number: 9232215
Client Project ID: NC101047.0002/Worth

METHOD BLANK: 922231634
Associated Lab Samples: 922218656 922218763 922218789 922218797 922218805 922218813 922218821

Parameter	Units	Blank Result	Reporting Limit	Footnotes
1,1,1-Trichloroethane	ug/kg	ND	5.0	
1,1,2-Trichloroethane	ug/kg	ND	5.0	
Trichloroethene	ug/kg	ND	5.0	
Trichlorofluoromethane	ug/kg	ND	5.0	
1,2,3-Trichloropropane	ug/kg	ND	5.0	
1,2,4-Trimethylbenzene	ug/kg	ND	5.0	
1,3,5-Trimethylbenzene	ug/kg	ND	5.0	
Vinyl chloride	ug/kg	ND	10.	
m&p-Xylene	ug/kg	ND	10.	
o-Xylene	ug/kg	ND	5.0	
Toluene-d8 (S)	%	97		
4-Bromofluorobenzene (S)	%	96		
Dibromofluoromethane (S)	%	94		
1,2-Dichloroethane-d4 (S)	%	92		

LABORATORY CONTROL SAMPLE & LCSD: 922229836 922229844

Parameter	Units	Spike Conc.	LCS Result	LCSD Result	LCS % Rec	LCSD % Rec	RPD	Footnotes
Acetone	ug/kg	100	88.90	121.8	89	122	31	
Benzene	ug/kg	50	52.26	54.92	105	110	5	
Bromobenzene	ug/kg	50	53.07	52.95	106	106	0	
Bromochloromethane	ug/kg	50	47.74	49.45	96	99	4	
Bromodichloromethane	ug/kg	50	50.27	52.29	101	105	4	
Bromoform	ug/kg	50	50.30	51.92	101	104	3	
Bromomethane	ug/kg	50	47.99	50.89	96	102	6	
2-Butanone (MEK)	ug/kg	100	84.42	92.07	84	92	9	
n-Butylbenzene	ug/kg	50	50.03	53.35	100	107	6	
sec-Butylbenzene	ug/kg	50	50.52	52.77	101	106	4	
tert-Butylbenzene	ug/kg	50	51.44	52.12	103	104	1	
Carbon disulfide	ug/kg	100	94.53	100.6	94	101	6	
Carbon tetrachloride	ug/kg	50	49.97	51.27	100	103	3	
Chlorobenzene	ug/kg	50	50.65	52.11	101	104	3	
Chloroethane	ug/kg	50	36.69	42.14	73	84	14	

Laboratory Certification IDs
NC Wastewater 12
NC Drinking Water 37706
SC 99006

REPORT OF LABORATORY ANALYSIS
This report shall not be reproduced, except in full,
without the written consent of Pace Analytical Services, Inc.

Laboratory Certification IDs
LA Wastewater 04034
VA Drinking Water 213
FL NELAP E87627

Pace Analytical™
www.pacelabs.com

Pace Analytical Services, Inc.
9800 Kincey Avenue, Suite 100
Huntersville, NC 28078
Phone: 704.875.9092
Fax: 704.875.9091

QUALITY CONTROL DATA

Lab Project Number: 9232215
Client Project ID: NC101047.0002/Worth

LABORATORY CONTROL SAMPLE & LCSD: 922229836 922229844

Parameter	Units	Spike Conc.	LCS Result	LCSD Result	LCS % Rec	LCSD % Rec	RPD	Footnotes
Chloroform	ug/kg	50	49.97	52.38	100	105	5	
Chloromethane	ug/kg	50	30.73	26.77	62	54	14	
2-Chlorotoluene	ug/kg	50	58.38	62.89	117	126	7	
4-Chlorotoluene	ug/kg	50	54.62	56.33	109	113	3	
1,2-Dibromo-3-chloropropane	ug/kg	50	54.08	53.69	108	107	1	
Dibromochloromethane	ug/kg	50	51.27	53.00	103	106	3	
1,2-Dibromoethane (EDB)	ug/kg	50	50.42	52.46	101	105	4	
Dibromomethane	ug/kg	50	48.84	50.47	98	101	3	
1,2-Dichlorobenzene	ug/kg	50	51.99	53.39	104	107	3	
1,3-Dichlorobenzene	ug/kg	50	50.10	51.53	100	103	3	
1,4-Dichlorobenzene	ug/kg	50	53.96	56.48	108	113	5	
Dichlorodifluoromethane	ug/kg	50	24.30	25.20	49	50	4	3
1,1-Dichloroethane	ug/kg	50	51.76	54.10	104	108	4	
1,2-Dichloroethane	ug/kg	50	48.16	50.70	96	101	5	
1,1-Dichloroethene	ug/kg	50	61.00	64.08	122	128	5	
cis-1,2-Dichloroethene	ug/kg	50	54.63	56.55	109	113	3	
trans-1,2-Dichloroethene	ug/kg	50	61.00	64.08	122	128	5	
1,2-Dichloropropane	ug/kg	50	50.20	51.95	100	104	3	
1,3-Dichloropropane	ug/kg	50	52.13	53.67	104	107	3	
2,2-Dichloropropane	ug/kg	50	52.74	55.89	105	112	6	
1,1-Dichloropropene	ug/kg	50	49.39	51.48	99	103	4	
Diisopropyl ether	ug/kg	50	50.83	53.37	102	107	5	
Ethylbenzene	ug/kg	50	50.57	52.06	101	104	3	
Hexachloro-1,3-butadiene	ug/kg	50	51.80	53.10	104	106	2	
Isopropylbenzene (Cumene)	ug/kg	50	49.87	51.63	100	103	3	
p-Isopropyltoluene	ug/kg	50	49.81	52.36	100	105	5	
Methylene chloride	ug/kg	50	54.25	59.88	109	120	10	
4-Methyl-2-pentanone (MIBK)	ug/kg	100	95.85	102.1	96	102	6	
Methyl-tert-butyl ether	ug/kg	50	52.31	54.77	105	110	5	
Naphthalene	ug/kg	50	62.01	59.77	124	120	4	
n-Propylbenzene	ug/kg	50	51.53	51.53	103	103	0	
Styrene	ug/kg	50	50.31	51.59	101	103	3	
1,1,1,2-Tetrachloroethane	ug/kg	50	50.37	52.05	101	104	3	
1,1,2,2-Tetrachloroethane	ug/kg	50	51.75	53.01	103	106	2	
Tetrachloroethene	ug/kg	50	50.11	52.16	100	104	4	
Tetrahydrofuran	ug/kg	500	480.4	507.9	96	102	6	

Laboratory Certification IDs
NC Wastewater 12
NC Drinking Water 37706
SC 99006

REPORT OF LABORATORY ANALYSIS
This report shall not be reproduced, except in full,
without the written consent of Pace Analytical Services, Inc.

Laboratory Certification IDs
LA Wastewater 04034
VA Drinking Water 213
FL NELAP E87627

Pace Analytical™
www.pacelabs.com

Pace Analytical Services, Inc.
9800 Kincey Avenue, Suite 100
Huntersville, NC 28078
Phone: 704.875.9092
Fax: 704.875.9091

QUALITY CONTROL DATA

Lab Project Number: 9232215
Client Project ID: NC101047.0002/Worth

LABORATORY CONTROL SAMPLE & LCSD: 922229836 922229844

Parameter	Units	Spike Conc.	LCS Result	LCSD Result	LCS % Rec	LCSD % Rec	RPD	Footnotes
Toluene	ug/kg	50	49.44	51.83	99	104	5	
1,2,3-Trichlorobenzene	ug/kg	50	55.61	57.24	111	114	3	
1,2,4-Trichlorobenzene	ug/kg	50	55.61	57.24	111	114	3	
1,1,1-Trichloroethane	ug/kg	50	48.78	49.97	98	100	2	
1,1,2-Trichloroethane	ug/kg	50	49.80	50.89	100	102	2	
Trichloroethene	ug/kg	50	49.69	51.43	99	103	3	
Trichlorofluoromethane	ug/kg	50	45.64	47.51	91	95	4	
1,2,3-Trichloropropane	ug/kg	50	51.37	52.34	103	105	2	
1,2,4-Trimethylbenzene	ug/kg	50	54.16	56.83	108	114	5	
1,3,5-Trimethylbenzene	ug/kg	50	52.33	53.95	105	108	3	
Vinyl chloride	ug/kg	50	26.50	28.46	53	57	7	
m&p-Xylene	ug/kg	100	103.9	107.8	104	108	4	
o-Xylene	ug/kg	50	51.16	52.72	102	105	3	
Toluene-d8 (S)					99	100		
4-Bromofluorobenzene (S)					100	101		
Dibromofluoromethane (S)					97	97		
1,2-Dichloroethane-d4 (S)					92	94		

MATRIX SPIKE & MATRIX SPIKE DUPLICATE: 922231618 922231626

Parameter	Units	922218722 Result	Spike Conc.	MS Result	MSD Result	MS % Rec	MSD % Rec	RPD	Footnotes
Benzene	ug/kg	0	58.57	44.87	45.27	77	77	1	
Chlorobenzene	ug/kg	0	58.57	50.98	51.96	87	89	2	
1,1-Dichloroethene	ug/kg	0	58.57	47.19	48.90	81	84	4	
Toluene	ug/kg	8.385	58.57	47.92	49.12	68	70	2	
Trichloroethene	ug/kg	34.91	58.57	82.47	79.71	81	76	3	
Toluene-d8 (S)						96	98		
4-Bromofluorobenzene (S)						97	97		
Dibromofluoromethane (S)						90	90		
1,2-Dichloroethane-d4 (S)						79	80		

Laboratory Certification IDs
NC Wastewater 12
NC Drinking Water 37706
SC 99006

REPORT OF LABORATORY ANALYSIS
This report shall not be reproduced, except in full,
without the written consent of Pace Analytical Services, Inc.

Laboratory Certification IDs
LA Wastewater 04034
VA Drinking Water 213
FL NELAP E87627

Pace Analytical™
www.pacelabs.com

Pace Analytical Services, Inc.
9800 Kincey Avenue, Suite 100
Huntersville, NC 28078
Phone: 704.875.9092
Fax: 704.875.9091

QUALITY CONTROL DATA

Lab Project Number: 9232215
Client Project ID: NC101047.0002/Worth

SAMPLE DUPLICATE: 922229851

Parameter	Units	922218714 Result	DUP Result	RPD	Footnotes
Acetone	ug/kg	ND	ND	NC	
Benzene	ug/kg	ND	ND	NC	
Bromobenzene	ug/kg	ND	ND	NC	
Bromochloromethane	ug/kg	ND	ND	NC	
Bromodichloromethane	ug/kg	ND	ND	NC	
Bromoform	ug/kg	ND	ND	NC	
Bromomethane	ug/kg	ND	ND	NC	
2-Butanone (MEK)	ug/kg	ND	ND	NC	
n-Butylbenzene	ug/kg	ND	ND	NC	
sec-Butylbenzene	ug/kg	ND	ND	NC	
tert-Butylbenzene	ug/kg	ND	ND	NC	
Carbon disulfide	ug/kg	ND	ND	NC	
Carbon tetrachloride	ug/kg	ND	ND	NC	
Chlorobenzene	ug/kg	ND	ND	NC	
Chloroethane	ug/kg	ND	ND	NC	
Chloroform	ug/kg	ND	ND	NC	
Chloromethane	ug/kg	ND	ND	NC	
2-Chlorotoluene	ug/kg	ND	ND	NC	
4-Chlorotoluene	ug/kg	ND	ND	NC	
1,2-Dibromo-3-chloropropane	ug/kg	ND	ND	NC	
Dibromochloromethane	ug/kg	ND	ND	NC	
1,2-Dibromoethane (EDB)	ug/kg	ND	ND	NC	
Dibromomethane	ug/kg	ND	ND	NC	
1,2-Dichlorobenzene	ug/kg	ND	ND	NC	
1,3-Dichlorobenzene	ug/kg	ND	ND	NC	
1,4-Dichlorobenzene	ug/kg	ND	ND	NC	
Dichlorodifluoromethane	ug/kg	ND	ND	NC	
1,1-Dichloroethane	ug/kg	ND	ND	NC	
1,2-Dichloroethane	ug/kg	ND	ND	NC	
1,1-Dichloroethene	ug/kg	ND	ND	NC	
cis-1,2-Dichloroethene	ug/kg	ND	ND	NC	
trans-1,2-Dichloroethene	ug/kg	ND	ND	NC	
1,2-Dichloropropane	ug/kg	ND	ND	NC	
1,3-Dichloropropane	ug/kg	ND	ND	NC	
2,2-Dichloropropane	ug/kg	ND	ND	NC	
1,1-Dichloropropene	ug/kg	ND	ND	NC	

Laboratory Certification IDs
NC Wastewater 12
NC Drinking Water 37706
SC 99006

REPORT OF LABORATORY ANALYSIS
This report shall not be reproduced, except in full,
without the written consent of Pace Analytical Services, Inc.

Laboratory Certification IDs
LA Wastewater 04034
VA Drinking Water 213
FL NELAP E87627

Pace Analytical™
www.pacelabs.com

QUALITY CONTROL DATA

Pace Analytical Services, Inc.
9800 Kincey Avenue, Suite 100
Huntersville, NC 28078
Phone: 704.875.9092
Fax: 704.875.9091

Lab Project Number: 9232215
Client Project ID: NC101047.0002/Worth

SAMPLE DUPLICATE: 922229851

Parameter	Units	922218714 Result	DUP Result	RPD	Footnotes
Diisopropyl ether	ug/kg	ND	ND	NC	
Ethylbenzene	ug/kg	ND	ND	NC	
Hexachloro-1,3-butadiene	ug/kg	ND	ND	NC	
Isopropylbenzene (Cumene)	ug/kg	ND	ND	NC	
p-Isopropyltoluene	ug/kg	ND	ND	NC	
Methylene chloride	ug/kg	7.800	ND	NC	5
4-Methyl-2-pentanone (MIBK)	ug/kg	ND	ND	NC	
Methyl-tert-butyl ether	ug/kg	ND	ND	NC	
Naphthalene	ug/kg	ND	ND	NC	
n-Propylbenzene	ug/kg	ND	ND	NC	
Styrene	ug/kg	ND	ND	NC	
1,1,1,2-Tetrachloroethane	ug/kg	ND	ND	NC	
1,1,2,2-Tetrachloroethane	ug/kg	ND	ND	NC	
Tetrachloroethene	ug/kg	19.00	13.00	41	5
Tetrahydrofuran	ug/kg	ND	ND	NC	
Toluene	ug/kg	ND	ND	NC	
1,2,3-Trichlorobenzene	ug/kg	7.900	ND	NC	
1,2,4-Trichlorobenzene	ug/kg	12.00	ND	NC	
1,1,1-Trichloroethane	ug/kg	ND	ND	NC	
1,1,2-Trichloroethane	ug/kg	ND	ND	NC	
Trichloroethene	ug/kg	20.00	10.00	62	5
Trichlorofluoromethane	ug/kg	ND	ND	NC	
1,2,3-Trichloropropane	ug/kg	ND	ND	NC	
1,2,4-Trimethylbenzene	ug/kg	ND	ND	NC	
1,3,5-Trimethylbenzene	ug/kg	ND	ND	NC	
Vinyl chloride	ug/kg	ND	ND	NC	
m&p-Xylene	ug/kg	ND	ND	NC	
o-Xylene	ug/kg	ND	ND	NC	
Toluene-d8 (S)	%	98	91		
4-Bromofluorobenzene (S)	%	81	80		
Dibromofluoromethane (S)	%	107	102		
1,2-Dichloroethane-d4 (S)	%	104	89		

Laboratory Certification IDs
NC Wastewater 12
NC Drinking Water 37706
SC 99006

REPORT OF LABORATORY ANALYSIS
This report shall not be reproduced, except in full,
without the written consent of Pace Analytical Services, Inc.

Laboratory Certification IDs
LA Wastewater 04034
VA Drinking Water 213
FL NELAP E87627

Pace Analytical™
www.pacelabs.com

Pace Analytical Services, Inc.
9800 Kincey Avenue, Suite 100
Huntersville, NC 28078
Phone: 704.875.9092
Fax: 704.875.9091

QUALITY CONTROL DATA

Lab Project Number: 9232215
Client Project ID: NC101047.0002/Worth

QC Batch: 56523 — Analysis Method: EPA 8260
QC Batch Method: EPA 8260 — Analysis Description: GC/MS VOCs by 8260
Associated Lab Samples: 922218839

METHOD BLANK: 922229893
Associated Lab Samples: 922218839

Parameter	Units	Blank Result	Reporting Limit	Footnotes
Acetone	ug/l	ND	100	
Benzene	ug/l	ND	5.0	
Bromobenzene	ug/l	ND	5.0	
Bromochloromethane	ug/l	ND	5.0	
Bromodichloromethane	ug/l	ND	5.0	
Bromoform	ug/l	ND	5.0	
Bromomethane	ug/l	ND	10.	
2-Butanone (MEK)	ug/l	ND	100	
n-Butylbenzene	ug/l	ND	5.0	
sec-Butylbenzene	ug/l	ND	5.0	
tert-Butylbenzene	ug/l	ND	5.0	
Carbon disulfide	ug/l	ND	10.	
Carbon tetrachloride	ug/l	ND	5.0	
Chlorobenzene	ug/l	ND	5.0	
Chloroethane	ug/l	ND	10.	
Chloroform	ug/l	ND	5.0	
Chloromethane	ug/l	ND	10.	
2-Chlorotoluene	ug/l	ND	5.0	
4-Chlorotoluene	ug/l	ND	5.0	
1,2-Dibromo-3-chloropropane	ug/l	ND	5.0	
Dibromochloromethane	ug/l	ND	5.0	
1,2-Dibromoethane (EDB)	ug/l	ND	5.0	
Dibromomethane	ug/l	ND	5.0	
1,2-Dichlorobenzene	ug/l	ND	5.0	
1,3-Dichlorobenzene	ug/l	ND	5.0	
1,4-Dichlorobenzene	ug/l	ND	5.0	
Dichlorodifluoromethane	ug/l	ND	10.	
1,1-Dichloroethane	ug/l	ND	5.0	
1,2-Dichloroethane	ug/l	ND	5.0	
1,1-Dichloroethene	ug/l	ND	5.0	

Laboratory Certification IDs
NC Wastewater 12
NC Drinking Water 37706
SC 99006

REPORT OF LABORATORY ANALYSIS
This report shall not be reproduced, except in full,
without the written consent of Pace Analytical Services, Inc.

Laboratory Certification IDs
LA Wastewater 04034
VA Drinking Water 213
FL NELAP E87627

Pace Analytical™
www.pacelabs.com

Pace Analytical Services, Inc.
9800 Kincey Avenue, Suite 100
Huntersville, NC 28078
Phone: 704.875.9092
Fax: 704.875.9091

QUALITY CONTROL DATA

Lab Project Number: 9232215
Client Project ID: NC101047.0002/Worth

METHOD BLANK: 922229893
Associated Lab Samples: 922218839

Parameter	Units	Blank Result	Reporting Limit	Footnotes
cis-1,2-Dichloroethene	ug/l	ND	5.0	
trans-1,2-Dichloroethene	ug/l	ND	5.0	
1,2-Dichloropropane	ug/l	ND	5.0	
1,3-Dichloropropane	ug/l	ND	5.0	
2,2-Dichloropropane	ug/l	ND	5.0	
1,1-Dichloropropene	ug/l	ND	5.0	
Diisopropyl ether	ug/l	ND	5.0	
Ethylbenzene	ug/l	ND	5.0	
Hexachloro-1,3-butadiene	ug/l	ND	5.0	
Isopropylbenzene (Cumene)	ug/l	ND	5.0	
p-Isopropyltoluene	ug/l	ND	5.0	
Methylene chloride	ug/l	ND	5.0	
4-Methyl-2-pentanone (MIBK)	ug/l	ND	50.	
Methyl-tert-butyl ether	ug/l	ND	5.0	
Naphthalene	ug/l	ND	5.0	
n-Propylbenzene	ug/l	ND	5.0	
Styrene	ug/l	ND	5.0	
1,1,1,2-Tetrachloroethane	ug/l	ND	5.0	
1,1,2,2-Tetrachloroethane	ug/l	ND	5.0	
Tetrachloroethene	ug/l	ND	5.0	
Tetrahydrofuran	ug/l	ND	50.	
Toluene	ug/l	ND	5.0	
1,2,3-Trichlorobenzene	ug/l	ND	5.0	
1,2,4-Trichlorobenzene	ug/l	ND	5.0	
1,1,1-Trichloroethane	ug/l	ND	5.0	
1,1,2-Trichloroethane	ug/l	ND	5.0	
Trichloroethene	ug/l	ND	5.0	
Trichlorofluoromethane	ug/l	ND	10.	
1,2,3-Trichloropropane	ug/l	ND	5.0	
1,2,4-Trimethylbenzene	ug/l	ND	5.0	
1,3,5-Trimethylbenzene	ug/l	ND	5.0	
Vinyl chloride	ug/l	ND	10.	
m&p-Xylene	ug/l	ND	10.	
o-Xylene	ug/l	ND	5.0	
Toluene-d8 (S)	%	98		

Laboratory Certification IDs
NC Wastewater 12
NC Drinking Water 37706
SC 99006

REPORT OF LABORATORY ANALYSIS
This report shall not be reproduced, except in full,
without the written consent of Pace Analytical Services, Inc.

Laboratory Certification IDs
LA Wastewater 04034
VA Drinking Water 213
FL NELAP E87627

Pace Analytical™
www.pacelabs.com

QUALITY CONTROL DATA

Pace Analytical Services, Inc.
9800 Kincey Avenue, Suite 100
Huntersville, NC 28078
Phone: 704.875.9092
Fax: 704.875.9091

Lab Project Number: 9232215
Client Project ID: NC101047.0002/Worth

METHOD BLANK: 922229893
Associated Lab Samples: 922218839

Parameter	Units	Blank Result	Reporting Limit	Footnotes
4-Bromofluorobenzene (S)	%	88		
Dibromofluoromethane (S)	%	107		
1,2-Dichloroethane-d4 (S)	%	104		

LABORATORY CONTROL SAMPLE: 922229901

Parameter	Units	Spike Conc.	LCS Result	LCS % Rec	Footnotes
Acetone	ug/l	100	75.23	75	
Benzene	ug/l	50	49.62	99	
Bromobenzene	ug/l	50	47.81	96	
Bromochloromethane	ug/l	50	42.50	85	
Bromodichloromethane	ug/l	50	50.05	100	
Bromoform	ug/l	50	47.91	96	
Bromomethane	ug/l	50	159.4	319	2
2-Butanone (MEK)	ug/l	100	74.55	74	
n-Butylbenzene	ug/l	50	47.70	95	
sec-Butylbenzene	ug/l	50	49.39	99	
tert-Butylbenzene	ug/l	50	49.62	99	
Carbon disulfide	ug/l	100	75.28	75	
Carbon tetrachloride	ug/l	50	51.21	102	
Chlorobenzene	ug/l	50	48.63	97	
Chloroethane	ug/l	50	56.60	113	
Chloroform	ug/l	50	44.12	88	
Chloromethane	ug/l	50	44.28	89	
2-Chlorotoluene	ug/l	50	52.31	105	
4-Chlorotoluene	ug/l	50	53.09	106	
1,2-Dibromo-3-chloropropane	ug/l	50	47.15	94	
Dibromochloromethane	ug/l	50	47.90	96	
1,2-Dibromoethane (EDB)	ug/l	50	46.74	94	
Dibromomethane	ug/l	50	48.04	96	
1,2-Dichlorobenzene	ug/l	50	49.85	100	
1,3-Dichlorobenzene	ug/l	50	50.16	100	
1,4-Dichlorobenzene	ug/l	50	47.29	95	

Laboratory Certification IDs
NC Wastewater 12
NC Drinking Water 37706
SC 99006

REPORT OF LABORATORY ANALYSIS
This report shall not be reproduced, except in full,
without the written consent of Pace Analytical Services, Inc.

Laboratory Certification IDs
LA Wastewater 04034
VA Drinking Water 213
FL NELAP E87627

Pace Analytical™
www.pacelabs.com

Pace Analytical Services, Inc.
9800 Kincey Avenue, Suite 100
Huntersville, NC 28078
Phone: 704.875.9092
Fax: 704.875.9091

QUALITY CONTROL DATA

Lab Project Number: 9232215
Client Project ID: NC101047.0002/Worth

LABORATORY CONTROL SAMPLE: 922229901

Parameter	Units	Spike Conc.	LCS Result	LCS % Rec	Footnotes
Dichlorodifluoromethane	ug/l	50	51.83	104	
1,1-Dichloroethane	ug/l	50	44.46	89	
1,2-Dichloroethane	ug/l	50	41.24	82	
1,1-Dichloroethene	ug/l	50	46.53	93	
cis-1,2-Dichloroethene	ug/l	50	47.74	96	
trans-1,2-Dichloroethene	ug/l	50	46.90	94	
1,2-Dichloropropane	ug/l	50	49.13	98	
1,3-Dichloropropane	ug/l	50	49.37	99	
2,2-Dichloropropane	ug/l	50	54.92	110	
1,1-Dichloropropene	ug/l	50	50.39	101	
Diisopropyl ether	ug/l	50	41.28	83	
Ethylbenzene	ug/l	50	53.23	106	
Hexachloro-1,3-butadiene	ug/l	50	41.15	82	
Isopropylbenzene (Cumene)	ug/l	50	48.13	96	
p-Isopropyltoluene	ug/l	50	48.74	98	
Methylene chloride	ug/l	50	44.77	90	
4-Methyl-2-pentanone (MIBK)	ug/l	100	83.94	84	
Methyl-tert-butyl ether	ug/l	50	43.07	86	
Naphthalene	ug/l	50	43.66	87	
n-Propylbenzene	ug/l	50	49.62	99	
Styrene	ug/l	50	45.46	91	
1,1,1,2-Tetrachloroethane	ug/l	50	49.55	99	
1,1,2,2-Tetrachloroethane	ug/l	50	46.22	92	
Tetrachloroethene	ug/l	50	51.79	104	
Tetrahydrofuran	ug/l	500	382.0	76	
Toluene	ug/l	50	50.05	100	
1,2,3-Trichlorobenzene	ug/l	50	41.58	83	
1,2,4-Trichlorobenzene	ug/l	50	42.28	85	
1,1,1-Trichloroethane	ug/l	50	44.61	89	
1,1,2-Trichloroethane	ug/l	50	46.54	93	
Trichloroethene	ug/l	50	48.72	97	
Trichlorofluoromethane	ug/l	50	54.23	108	
1,2,3-Trichloropropane	ug/l	50	46.82	94	
1,2,4-Trimethylbenzene	ug/l	50	47.20	94	
1,3,5-Trimethylbenzene	ug/l	50	48.91	98	
Vinyl chloride	ug/l	50	44.19	88	

Laboratory Certification IDs
NC Wastewater 12
NC Drinking Water 37706
SC 99006

REPORT OF LABORATORY ANALYSIS
This report shall not be reproduced, except in full,
without the written consent of Pace Analytical Services, Inc.

Laboratory Certification IDs
LA Wastewater 04034
VA Drinking Water 213
FL NELAP E87627

Pace Analytical™
www.pacelabs.com

Pace Analytical Services, Inc.
9800 Kincey Avenue, Suite 100
Huntersville, NC 28078
Phone: 704.875.9092
Fax: 704.875.9091

QUALITY CONTROL DATA

Lab Project Number: 9232215
Client Project ID: NC101047.0002/Worth

LABORATORY CONTROL SAMPLE: 922229901

Parameter	Units	Spike Conc.	LCS Result	LCS % Rec	Footnotes
m&p-Xylene	ug/l	100	97.10	97	
o-Xylene	ug/l	50	48.14	96	
Toluene-d8 (S)				106	
4-Bromofluorobenzene (S)				101	
Dibromofluoromethane (S)				89	
1,2-Dichloroethane-d4 (S)				90	

MATRIX SPIKE: 922229927

Parameter	Units	922217716 Result	Spike Conc.	MS Result	MS % Rec	Footnotes
Benzene	ug/l	0	50.00	53.07	106	
Chlorobenzene	ug/l	0	50.00	52.36	105	
1,1-Dichloroethene	ug/l	0	50.00	51.82	104	
Toluene	ug/l	0	50.00	53.12	106	
Trichloroethene	ug/l	0	50.00	52.13	104	
Toluene-d8 (S)					105	
4-Bromofluorobenzene (S)					104	
Dibromofluoromethane (S)					95	
1,2-Dichloroethane-d4 (S)					91	

SAMPLE DUPLICATE: 922229919

Parameter	Units	922217708 Result	DUP Result	RPD	Footnotes
Acetone	ug/l	ND	ND	NC	
Benzene	ug/l	ND	ND	NC	
Bromobenzene	ug/l	ND	ND	NC	
Bromochloromethane	ug/l	ND	ND	NC	
Bromodichloromethane	ug/l	ND	ND	NC	
Bromoform	ug/l	ND	ND	NC	
Bromomethane	ug/l	ND	ND	NC	
2-Butanone (MEK)	ug/l	ND	ND	NC	
n-Butylbenzene	ug/l	ND	ND	NC	

Laboratory Certification IDs
NC Wastewater 12
NC Drinking Water 37706
SC 99006

REPORT OF LABORATORY ANALYSIS
This report shall not be reproduced, except in full,
without the written consent of Pace Analytical Services, Inc.

Laboratory Certification IDs
LA Wastewater 04034
VA Drinking Water 213
FL NELAP E87627

Pace Analytical™
www.pacelabs.com

Pace Analytical Services, Inc.
9800 Kincey Avenue, Suite 100
Huntersville, NC 28078
Phone: 704.875.9092
Fax: 704.875.9091

QUALITY CONTROL DATA

Lab Project Number: 9232215
Client Project ID: NC101047.0002/Worth

SAMPLE DUPLICATE: 922229919

Parameter	Units	922217708 Result	DUP Result	RPD	Footnotes
sec-Butylbenzene	ug/l	ND	ND	NC	
tert-Butylbenzene	ug/l	ND	ND	NC	
Carbon disulfide	ug/l	ND	ND	NC	
Carbon tetrachloride	ug/l	ND	ND	NC	
Chlorobenzene	ug/l	ND	ND	NC	
Chloroethane	ug/l	ND	ND	NC	
Chloroform	ug/l	ND	ND	NC	
Chloromethane	ug/l	ND	ND	NC	
2-Chlorotoluene	ug/l	ND	ND	NC	
4-Chlorotoluene	ug/l	ND	ND	NC	
1,2-Dibromo-3-chloropropane	ug/l	ND	ND	NC	
Dibromochloromethane	ug/l	ND	ND	NC	
1,2-Dibromoethane (EDB)	ug/l	ND	ND	NC	
Dibromomethane	ug/l	ND	ND	NC	
1,2-Dichlorobenzene	ug/l	ND	ND	NC	
1,3-Dichlorobenzene	ug/l	ND	ND	NC	
1,4-Dichlorobenzene	ug/l	ND	ND	NC	
Dichlorodifluoromethane	ug/l	ND	ND	NC	
1,1-Dichloroethane	ug/l	ND	ND	NC	
1,2-Dichloroethane	ug/l	ND	ND	NC	
1,1-Dichloroethene	ug/l	ND	ND	NC	
cis-1,2-Dichloroethene	ug/l	ND	ND	NC	
trans-1,2-Dichloroethene	ug/l	ND	ND	NC	
1,2-Dichloropropane	ug/l	ND	ND	NC	
1,3-Dichloropropane	ug/l	ND	ND	NC	
2,2-Dichloropropane	ug/l	ND	ND	NC	
1,1-Dichloropropene	ug/l	ND	ND	NC	
Diisopropyl ether	ug/l	ND	ND	NC	
Ethylbenzene	ug/l	ND	ND	NC	
Hexachloro-1,3-butadiene	ug/l	ND	ND	NC	
Isopropylbenzene (Cumene)	ug/l	ND	ND	NC	
p-Isopropyltoluene	ug/l	ND	ND	NC	
Methylene chloride	ug/l	ND	ND	NC	
4-Methyl-2-pentanone (MIBK)	ug/l	ND	ND	NC	
Methyl-tert-butyl ether	ug/l	21.00	19.00	6	
Naphthalene	ug/l	ND	ND	NC	

Laboratory Certification IDs
NC Wastewater 12
NC Drinking Water 37706
SC 99006

REPORT OF LABORATORY ANALYSIS
This report shall not be reproduced, except in full,
without the written consent of Pace Analytical Services, Inc.

Laboratory Certification IDs
LA Wastewater 04034
VA Drinking Water 213
FL NELAP E87627

Pace Analytical™
www.pacelabs.com

Pace Analytical Services, Inc.
9800 Kincey Avenue, Suite 100
Huntersville, NC 28078
Phone: 704.875.9092
Fax: 704.875.9091

QUALITY CONTROL DATA

Lab Project Number: 9232215
Client Project ID: NC101047.0002/Worth

SAMPLE DUPLICATE: 922229919

Parameter	Units	922217708 Result	DUP Result	RPD	Footnotes
n-Propylbenzene	ug/l	ND	ND	NC	
Styrene	ug/l	ND	ND	NC	
1,1,1,2-Tetrachloroethane	ug/l	ND	ND	NC	
1,1,2,2-Tetrachloroethane	ug/l	ND	ND	NC	
Tetrachloroethene	ug/l	ND	ND	NC	
Tetrahydrofuran	ug/l	ND	ND	NC	
Toluene	ug/l	ND	ND	NC	
1,2,3-Trichlorobenzene	ug/l	ND	ND	NC	
1,2,4-Trichlorobenzene	ug/l	ND	ND	NC	
1,1,1-Trichloroethane	ug/l	ND	ND	NC	
1,1,2-Trichloroethane	ug/l	ND	ND	NC	
Trichloroethene	ug/l	ND	ND	NC	
Trichlorofluoromethane	ug/l	ND	ND	NC	
1,2,3-Trichloropropane	ug/l	ND	ND	NC	
1,2,4-Trimethylbenzene	ug/l	ND	ND	NC	
1,3,5-Trimethylbenzene	ug/l	ND	ND	NC	
Vinyl chloride	ug/l	ND	ND	NC	
m&p-Xylene	ug/l	ND	ND	NC	
o-Xylene	ug/l	ND	ND	NC	
Toluene-d8 (S)	%	101	101		
4-Bromofluorobenzene (S)	%	84	79		
Dibromofluoromethane (S)	%	118	114		
1,2-Dichloroethane-d4 (S)	%	114	111		

Laboratory Certification IDs
NC Wastewater 12
NC Drinking Water 37706
SC 99006

REPORT OF LABORATORY ANALYSIS
This report shall not be reproduced, except in full,
without the written consent of Pace Analytical Services, Inc.

Laboratory Certification IDs
LA Wastewater 04034
VA Drinking Water 213
FL NELAP E87627

Pace Analytical™
www.pacelabs.com

Pace Analytical Services, Inc.
9800 Kincey Avenue, Suite 100
Huntersville, NC 28078
Phone: 704.875.9092
Fax: 704.875.9091

QUALITY CONTROL DATA

Lab Project Number: 9232215
Client Project ID: NC101047.0002/Worth

QC Batch: 56286 — Analysis Method: % Moisture
QC Batch Method: — Analysis Description: Percent Moisture
Associated Lab Samples: 922218607, 922218615, 922218623, 922218631, 922218649, 922218656, 922218664, 922218672, 922218680, 922218698, 922218706, 922218714, 922218722, 922218730

SAMPLE DUPLICATE: 922219381

Parameter	Units	501620405 Result	DUP Result	RPD	Footnotes
Percent Moisture	%	11.10	11.40	3	

SAMPLE DUPLICATE: 922219399

Parameter	Units	922218649 Result	DUP Result	RPD	Footnotes
Percent Moisture	%	20.50	21.00	2	

Laboratory Certification IDs
NC Wastewater 12
NC Drinking Water 37706
SC 99006

REPORT OF LABORATORY ANALYSIS
This report shall not be reproduced, except in full,
without the written consent of Pace Analytical Services, Inc.

Laboratory Certification IDs
LA Wastewater 04034
VA Drinking Water 213
FL NELAP E87627

Pace Analytical™
www.pacelabs.com

Pace Analytical Services, Inc.
9800 Kincey Avenue, Suite 100
Huntersville, NC 28078
Phone: 704.875.9092
Fax: 704.875.9091

QUALITY CONTROL DATA

Lab Project Number: 9232215
Client Project ID: NC101047.0002/Worth

QC Batch: 56287 Analysis Method: % Moisture
QC Batch Method: Analysis Description: Percent Moisture
Associated Lab Samples: 922218748 922218755 922218763 922218771 922218789
922218797 922218805 922218813 922218821

SAMPLE DUPLICATE: 922219407

Parameter	Units	922218748 Result	DUP Result	RPD	Footnotes
Percent Moisture	%	20.10	20.50	2	

Date: 05/03/02

Laboratory Certification IDs
NC Wastewater 12
NC Drinking Water 37706
SC 99006

REPORT OF LABORATORY ANALYSIS
This report shall not be reproduced, except in full,
without the written consent of Pace Analytical Services, Inc.

Laboratory Certification IDs
LA Wastewater 04034
VA Drinking Water 213
FL NELAP E87627

Pace Analytical™
www.pacelabs.com

Pace Analytical Services, Inc.
9800 Kincey Avenue, Suite 100
Huntersville, NC 28078
Phone: 704.875.9092
Fax: 704.875.9091

Lab Project Number: 9232215
Client Project ID: NC101047.0002/Worth

QUALITY CONTROL DATA PARAMETER FOOTNOTES

Consistent with EPA guidelines, unrounded concentrations are displayed and have been used to calculate % Rec and RPD values.

LCS(D)Laboratory Control Sample (Duplicate)
MS(D)Matrix Spike (Duplicate)
DUP Sample Duplicate
ND Not detected at or above adjusted reporting limit
NC Not Calculable
J Estimated concentration above the adjusted method detection limit and below the adjusted reporting limit
RPD Relative Percent Difference
(S) Surrogate
[1] RPD value was outside of control limits, however % Recoveries were acceptable. Samples for QC batch accepted based on % recoveries and completeness of QC data.
[2] Recovery falls outside of QC limits, however, this compound is not found in the associated samples.
[3] The surrogate and/or spike recovery was outside acceptance limits.
[4] Common laboratory contaminant.
[5] The calculated RPD was outside QC acceptance limits.

Laboratory Certification IDs
NC Wastewater 12
NC Drinking Water 37706
SC 99006

REPORT OF LABORATORY ANALYSIS
This report shall not be reproduced, except in full,
without the written consent of Pace Analytical Services, Inc.

Laboratory Certification IDs
LA Wastewater 04034
VA Drinking Water 213
FL NELAP E87627

ARCADIS

Laboratory Task Order No./P.O. No. _____

CHAIN-OF-CUSTODY RECORD

Page ____ of ____

Project Number/Name NC101047.0002.00002

Project Location Former Worth Chemical, Durham, NC

Laboratory Pace Analytical

Project Manager Jim Shilliday

Sampler(s)/Affiliation Dan Tomczak

ANALYSIS / METHOD / SIZE

32215

Sample ID/Location	Matrix	Date/Time Sampled	Lab ID	8260 4 oz jars						Remarks	Total
GP-24 (6-7.5')	S	4-18-02 / 13:20		1						922218607	1
GP-25 (4-5.5')		/ 13:50		1						615	1
GP-26 (4-5.5')		/ 14:50		1						623	1
GP-26 (5.5-7')		/ 14:50		1						631	1
GP-27 (6-8')		/ 13:00		1						649	1
GP-28 (0-2')		/ 12:35		1						656	1
GP-29 (4-5.5')		4-19-02 / 10:50		1						664	1
GP-30 (2-4')		4-18-02 / 15:15		1						672	1
GP-31 (5.5-7')		/ 15:50		1						680	1
GP-32 (0-2')		/ 16:30		1						698	1
GP-32 (2-4')		/ 16:30		1						706	1
GP-33 (2-4')		/ 16:10		1						714	1
GP-34 (2-4')		4-19-02 / 8:15		1						722	1
GP-35 (5.5-6.5')		/ 8:35		1						730	1
GP-36 (2-4')		/ 8:50		1						748	1

Sample Matrix: L = Liquid; S = Solid; A = Air

Total No. of Bottles/Containers 15

Relinquished by: [signature]	Organization: ARCADIS	Date 4/19/02	Time 12:30	Seal Intact? Yes No N/A
Received by: [signature]	Organization: PACE	Date 4/20/02	Time 9:45	
Relinquished by:	Organization:	Date / /	Time	Seal Intact? Yes No N/A
Received by:	Organization:	Date / /	Time	

Special Instructions/Remarks:

Delivery Method: ☐ In Person ☒ Common Carrier FedEx (SPECIFY) ☐ Lab Courier ☐ Other _____ (SPECIFY)

AG 05-12/01

ARCADIS

Laboratory Task Order No./P.O. No. _____ **CHAIN-OF-CUSTODY RECORD** Page ____ of ____

Project Number/Name NC101047.0002.00002

Project Location Former Worth Chemical, Durham, NC

Laboratory Pace Analytical

Project Manager Jim Shilliday

Sampler(s)/Affiliation Dan Tomczak

32215

Sample ID/Location	Matrix	Date/Time Sampled	Lab ID	ANALYSIS / METHOD / SIZE: 8260 4 oz jars	8260 40 ml vials w/HCl					Remarks	Total
GP-37 (4-5.5')	S	4-19-02 /10:00		1						92218755	1
GP-38 (4-5.5')	"	/9:40		1						763	1
GP-38 (7-8')	"	/9:40		1						771	1
GP-39 (5.5-6.5')	"	/9:45		1						789	1
GP-40 (5.5-7')	"	/11:50		1						797	1
GP-43 (1-2')	"	/10:25		1						805	1
HA-4 (2-3')	"	/12:25		1						813	1
HA-5 (0-1')	↓	↓ /12:45		1						821	1
Trip Blank	L	4-19-02 /18:15			2					Y	2

Sample Matrix: L = Liquid; S = Solid; A = Air

Total No. of Bottles/ Containers 10

Relinquished by: L. Dan Tomczak	Organization: ARCADIS	Date 4/19/02	Time 18:30	Seal Intact?	Temp 5.2
Received by: Jennifer Edwards	Organization: PACE	Date 4/20/02	Time 7:45	Yes No N/A	
Relinquished by: _____	Organization: _____	Date __/__/__	Time _____	Seal Intact?	
Received by: _____	Organization: _____	Date __/__/__	Time _____	Yes No N/A	

Special Instructions/Remarks: _____

Delivery Method: ☐ In Person ☑ Common Carrier FedEx (SPECIFY) ☐ Lab Courier ☐ Other _____ (SPECIFY)

AG 05-12/01

ARCADIS

Laboratory Task Order No./P.O. No. _____ **CHAIN-OF-CUSTODY RECORD** Page ____ of ____

Project Number/Name NC101647.0062.00002

Project Location Former Wells Chemical, Durham, NC

Laboratory Pace Analytical

Project Manager Jim Shilliday

Sampler(s)/Affiliation Dan Tonczak

Revised 4-22-02 DMT

Sample ID/Location	Matrix	Date/Time Sampled	Lab ID	ANALYSIS / METHOD / SIZE: 8260 + Acetone, MEK, MIBK, 4 oz jars						Remarks	Total
GP-24 (6-7.5')	S	4-18-02 / 13:20									1
GP-25 (4-5.5')		/ 13:50									1
GP-26 (4-5.5')		/ 14:50									1
GP-26 (5.5-7')		/ 14:50									1
GP-27 (6-8')		/ 13:00									1
GP-28 (0-2')		/ 12:35									1
GP-29 (4-5.5')		4-19-02 / 10:50									1
GP-30 (2-4')		4-18-02 / 15:15									1
GP-31 (5.5-7')		/ 15:50									1
GP-32 (0-2')		/ 16:30									1
GP-32 (2-4')		/ 16:30									1
GP-33 (2-4')		/ 16:10									1
GP-34 (2-4')		4-19-02 / 8:15									1
GP-35 (5.5-6.5')		/ 8:35									1
GP-36 (2-4')		/ 8:50									1

Sample Matrix: L = Liquid; S = Solid; A = Air

Total No. of Bottles/Containers: 15

					Seal Intact?
Relinquished by: Dan Tonczak	Organization: ARCADIS	Date 4/19/02	Time 12:30		
Received by: _____	Organization: _____	Date / /	Time _____		Yes No N/A
Relinquished by: _____	Organization: _____	Date / /	Time _____		Seal Intact?
Received by: _____	Organization: _____	Date / /	Time _____		Yes No N/A

Special Instructions/Remarks: _____

Delivery Method: ☐ In Person ☒ Common Carrier FedEx (SPECIFY) ☐ Lab Courier ☐ Other _____ (SPECIFY)

AG 05-1201

04/22/02 08:45 FAX 919 782 5905 ARCADIS G M 002

04/22/02 08:45 FAX 919 782 5905 ARCADIS G M 003

ARCADIS

Laboratory Task Order No./P.O. No. _____

CHAIN-OF-CUSTODY RECORD

Page ____ of ____

Revised 4-22-02 DMT

Project Number/Name NC101047.0002.00002

Project Location Ferrer Worth Chemical Durham, NC

Laboratory Pace Analytical

Project Manager Jim Shilliday

Sampler(s)/Affiliation Dan Tomczak

ANALYSIS / METHOD / SIZE

Sample ID/Location	Matrix	Date/Time Sampled	Lab ID	8260 + Acetone, MEK, MIBK 4 oz jars	8260 + Acetone, MEK, MIBK 40 ml vials w/HCl					Remarks	Total
GP-37 (4-5.5')	S	4-19-02 / 10:00		1							1
GP-38 (4-5.5')		/ 9:40		1							1
GP-38 (7-8')		/ 9:40		1							1
GP-39 (5.5-6.5')		/ 9:15		1							1
GP-40 (5.5-7')		/ 11:50		1							1
GP-43 (1-2')		/ 10:25		1							1
HA-4 (2-3')		/ 12:25		1							1
HA-5 (0-1')		/ 12:45		1							1
Trip Blank	L	4-19-02 / 18:15			2						2

Sample Matrix: L = Liquid; S = Solid; A = Air

Total No. of Bottles/Containers 10

Relinquished by: Dan Tomczak	Organization: ARCADIS	Date 4/19/02	Time 18:30	Seal Intact? Yes No N/A
Received by:	Organization:	Date / /	Time	
Relinquished by:	Organization:	Date / /	Time	Seal Intact? Yes No N/A
Received by:	Organization:	Date / /	Time	

Special Instructions/Remarks:

Delivery Method: ☐ In Person ☒ Common Carrier FedEx (SPECIFY) ☐ Lab Courier ☐ Other _____ (SPECIFY)

AG 05-12/01

APPENDIX D

ARCADIS

Appendix D

Groundwater Analytical Reports

Pace Analytical™
www.pacelabs.com

Pace Analytical Services, Inc.
9800 Kincey Avenue, Suite 100
Huntersville, NC 28078
Phone: 704.875.9092
Fax: 704.875.9091

RECEIVED
JUL 1 - 2002

June 28, 2002

Mr. Jim Shilliday
ARCADIS Geraghty & Miller
2301 Rexwoods Dr.
Suite 200
Raleigh, NC 27607

RE: Lab Project Number: 9233669
Client Project ID: Former Worth/NC101047.0002

Dear Mr. Shilliday:

Enclosed are the analytical results for sample(s) received by the laboratory on June 13, 2002. Results reported herein conform to the most current NELAC standards, where applicable, unless otherwise narrated in the body of the report.

If you have any questions concerning this report please feel free to contact me.

Sincerely,

Sherri Howard
Sherri.Howard@pacelabs.com
Project Manager

Enclosures

Pace Analytical™
www.pacelabs.com

Pace Analytical Services, Inc.
9800 Kincey Avenue, Suite 100
Huntersville, NC 28078
Phone: 704.875.9092
Fax: 704.875.9091

Lab Project Number: 9233669
Client Project ID: Former Worth/NC101047.0002

Lab Sample No: 922322417 Project Sample Number: 9233669-001 Date Collected: 06/12/02 14:20
Client Sample ID: MW-1 Matrix: Water Date Received: 06/13/02 10:40

Parameters	Results	Units	Report Limit	DF	Analyzed	By	CAS No.	Qual	RegLmt
Metals									
Trace ICP Metals	Prep/Method: / EPA 200.7								
Iron	0.40	mg/l	0.050	1.0	06/21/02 03:27	DJR	7439-89-6		
Manganese	0.66	mg/l	0.0050	1.0	06/21/02 03:27	DJR	7439-96-5		
Date Digested					06/19/02				
Wet Chemistry									
Ion Chromatography	Method: EPA 300.0								
Chloride	35.	mg/l	1.0	1.0	06/13/02	CDE	16887-00-6		
Nitrate	0.68	mg/l	0.10	1.0	06/13/02	CDE			
Nitrite	0.12	mg/l	0.10	1.0	06/13/02	CDE			
Sulfate	36.	mg/l	1.0	1.0	06/13/02	CDE			
Alkalinity, Total	Method: EPA 310.1								
Alkalinity, Total	320	mg/l	1.0	1.0	06/14/02	HEH			
Ammonia	Method: EPA 350.1								
Nitrogen, Ammonia	0.33	mg/l	0.10	1.0	06/13/02	BYH	7727-37-9		
Sulfide, Total	Method: EPA 376.2								
Sulfide	ND	mg/l	0.050	1.0	06/14/02	HEH			
Biochemical Oxygen Demand, 5 d	Prep/Method: / EPA 405.1								
BOD, 5 day	ND	mg/l	2.0	1.0	06/18/02	JBK			
Date Prepared					06/13/02				
Chemical Oxygen Demand	Method: EPA 410.4								
Chemical Oxygen Demand	ND	mg/l	25.	1.0	06/14/02	HEH			
GC/MS Volatiles									
GC/MS VOCs by 8260	Method: EPA 8260								
Acetone	ND	ug/l	100	1.0	06/24/02 22:18	DLK	67-64-1		
Benzene	ND	ug/l	5.0	1.0	06/24/02 22:18	DLK	71-43-2		
Bromobenzene	ND	ug/l	5.0	1.0	06/24/02 22:18	DLK	108-86-1		
Bromochloromethane	ND	ug/l	5.0	1.0	06/24/02 22:18	DLK	74-97-5		
Bromodichloromethane	ND	ug/l	5.0	1.0	06/24/02 22:18	DLK	75-27-4		
Bromoform	ND	ug/l	5.0	1.0	06/24/02 22:18	DLK	75-25-2		
Bromomethane	ND	ug/l	10.	1.0	06/24/02 22:18	DLK	74-83-9		
2-Butanone (MEK)	ND	ug/l	100	1.0	06/24/02 22:18	DLK	78-93-3		

Laboratory Certification IDs
NC Wastewater 12
NC Drinking Water 37706
SC 99006

REPORT OF LABORATORY ANALYSIS
This report shall not be reproduced, except in full,
without the written consent of Pace Analytical Services, Inc.

Laboratory Certification IDs
LA Wastewater 04034
VA Drinking Water 213
FL NELAP E87627

Pace Analytical™
www.pacelabs.com

Pace Analytical Services, Inc.
9800 Kincey Avenue, Suite 100
Huntersville, NC 28078
Phone: 704.875.9092
Fax: 704.875.9091

Lab Project Number: 9233669
Client Project ID: Former Worth/NC101047.0002

Lab Sample No: 922322417 Project Sample Number: 9233669-001 Date Collected: 06/12/02 14:20
Client Sample ID: MW-1 Matrix: Water Date Received: 06/13/02 10:40

Parameters	Results	Units	Report Limit	DF	Analyzed	By	CAS No.	Qual	RegLmt
n-Butylbenzene	ND	ug/l	5.0	1.0	06/24/02 22:18	DLK	104-51-8		
sec-Butylbenzene	ND	ug/l	5.0	1.0	06/24/02 22:18	DLK	135-98-8		
tert-Butylbenzene	ND	ug/l	5.0	1.0	06/24/02 22:18	DLK	98-06-6		
Carbon disulfide	ND	ug/l	10.	1.0	06/24/02 22:18	DLK	75-15-0		
Carbon tetrachloride	ND	ug/l	5.0	1.0	06/24/02 22:18	DLK	56-23-5		
Chlorobenzene	ND	ug/l	5.0	1.0	06/24/02 22:18	DLK	108-90-7		
Chloroethane	ND	ug/l	10.	1.0	06/24/02 22:18	DLK	75-00-3		
Chloroform	8.2	ug/l	5.0	1.0	06/24/02 22:18	DLK	67-66-3		
Chloromethane	ND	ug/l	10.	1.0	06/24/02 22:18	DLK	74-87-3		
2-Chlorotoluene	ND	ug/l	5.0	1.0	06/24/02 22:18	DLK	95-49-8		
4-Chlorotoluene	ND	ug/l	5.0	1.0	06/24/02 22:18	DLK	106-43-4		
1,2-Dibromo-3-chloropropane	ND	ug/l	5.0	1.0	06/24/02 22:18	DLK	96-12-8		
Dibromochloromethane	ND	ug/l	5.0	1.0	06/24/02 22:18	DLK	124-48-1		
1,2-Dibromoethane (EDB)	ND	ug/l	5.0	1.0	06/24/02 22:18	DLK	106-93-4		
Dibromomethane	ND	ug/l	5.0	1.0	06/24/02 22:18	DLK	74-95-3		
1,2-Dichlorobenzene	ND	ug/l	5.0	1.0	06/24/02 22:18	DLK	95-50-1		
1,3-Dichlorobenzene	ND	ug/l	5.0	1.0	06/24/02 22:18	DLK	541-73-1		
1,4-Dichlorobenzene	ND	ug/l	5.0	1.0	06/24/02 22:18	DLK	106-46-7		
Dichlorodifluoromethane	ND	ug/l	10.	1.0	06/24/02 22:18	DLK	75-71-8		
1,1-Dichloroethane	ND	ug/l	5.0	1.0	06/24/02 22:18	DLK	75-34-3		
1,2-Dichloroethane	ND	ug/l	5.0	1.0	06/24/02 22:18	DLK	107-06-2		
1,1-Dichloroethene	ND	ug/l	5.0	1.0	06/24/02 22:18	DLK	75-35-4		
cis-1,2-Dichloroethene	ND	ug/l	5.0	1.0	06/24/02 22:18	DLK	156-59-2		
trans-1,2-Dichloroethene	ND	ug/l	5.0	1.0	06/24/02 22:18	DLK	156-60-5		
1,2-Dichloropropane	ND	ug/l	5.0	1.0	06/24/02 22:18	DLK	78-87-5		
1,3-Dichloropropane	ND	ug/l	5.0	1.0	06/24/02 22:18	DLK	142-28-9		
2,2-Dichloropropane	ND	ug/l	5.0	1.0	06/24/02 22:18	DLK	594-20-7		
1,1-Dichloropropene	ND	ug/l	5.0	1.0	06/24/02 22:18	DLK	563-58-6		
Diisopropyl ether	ND	ug/l	5.0	1.0	06/24/02 22:18	DLK	108-20-3		
Ethylbenzene	ND	ug/l	5.0	1.0	06/24/02 22:18	DLK	100-41-4		
Hexachloro-1,3-butadiene	ND	ug/l	5.0	1.0	06/24/02 22:18	DLK	87-68-3		
Isopropylbenzene (Cumene)	ND	ug/l	5.0	1.0	06/24/02 22:18	DLK	98-82-8		
p-Isopropyltoluene	ND	ug/l	5.0	1.0	06/24/02 22:18	DLK	99-87-6		
Methylene chloride	ND	ug/l	5.0	1.0	06/24/02 22:18	DLK	75-09-2		
4-Methyl-2-pentanone (MIBK)	ND	ug/l	50.	1.0	06/24/02 22:18	DLK	108-10-1		
Methyl-tert-butyl ether	ND	ug/l	5.0	1.0	06/24/02 22:18	DLK	1634-04-4		
Naphthalene	ND	ug/l	5.0	1.0	06/24/02 22:18	DLK	91-20-3		
n-Propylbenzene	ND	ug/l	5.0	1.0	06/24/02 22:18	DLK	103-65-1		
Styrene	ND	ug/l	5.0	1.0	06/24/02 22:18	DLK	100-42-5		

Laboratory Certification IDs
NC Wastewater 12
NC Drinking Water 37706
SC 99006

REPORT OF LABORATORY ANALYSIS

This report shall not be reproduced, except in full,
without the written consent of Pace Analytical Services, Inc.

Laboratory Certification IDs
LA Wastewater 04034
VA Drinking Water 213
FL NELAP E87627

Pace Analytical™
www.pacelabs.com

Pace Analytical Services, Inc.
9800 Kincey Avenue, Suite 100
Huntersville, NC 28078
Phone: 704.875.9092
Fax: 704.875.9091

Lab Project Number: 9233669
Client Project ID: Former Worth/NC101047.0002

Lab Sample No: 922322417 Project Sample Number: 9233669-001 Date Collected: 06/12/02 14:20
Client Sample ID: MW-1 Matrix: Water Date Received: 06/13/02 10:40

Parameters	Results	Units	Report Limit	DF	Analyzed	By	CAS No.	Qual	RegLmt
1,1,1,2-Tetrachloroethane	ND	ug/l	5.0	1.0	06/24/02 22:18	DLK	630-20-6		
1,1,2,2-Tetrachloroethane	ND	ug/l	5.0	1.0	06/24/02 22:18	DLK	79-34-5		
Tetrachloroethene	15.	ug/l	5.0	1.0	06/24/02 22:18	DLK	127-18-4		
Tetrahydrofuran	ND	ug/l	50.	1.0	06/24/02 22:18	DLK	109-99-9		
Toluene	ND	ug/l	5.0	1.0	06/24/02 22:18	DLK	108-88-3		
1,2,3-Trichlorobenzene	ND	ug/l	5.0	1.0	06/24/02 22:18	DLK	87-61-6		
1,2,4-Trichlorobenzene	ND	ug/l	5.0	1.0	06/24/02 22:18	DLK	120-82-1		
1,1,1-Trichloroethane	ND	ug/l	5.0	1.0	06/24/02 22:18	DLK	71-55-6		
1,1,2-Trichloroethane	ND	ug/l	5.0	1.0	06/24/02 22:18	DLK	79-00-5		
Trichloroethene	7.0	ug/l	5.0	1.0	06/24/02 22:18	DLK	79-01-6		
Trichlorofluoromethane	ND	ug/l	10.	1.0	06/24/02 22:18	DLK	75-69-4		
1,2,3-Trichloropropane	ND	ug/l	5.0	1.0	06/24/02 22:18	DLK	96-18-4		
1,2,4-Trimethylbenzene	ND	ug/l	5.0	1.0	06/24/02 22:18	DLK	95-63-6		
1,3,5-Trimethylbenzene	ND	ug/l	5.0	1.0	06/24/02 22:18	DLK	108-67-8		
Vinyl chloride	ND	ug/l	10.	1.0	06/24/02 22:18	DLK	75-01-4		
m&p-Xylene	ND	ug/l	10.	1.0	06/24/02 22:18	DLK			
o-Xylene	ND	ug/l	5.0	1.0	06/24/02 22:18	DLK	95-47-6		
Toluene-d8 (S)	100	%		1.0	06/24/02 22:18	DLK	2037-26-5		
4-Bromofluorobenzene (S)	95	%		1.0	06/24/02 22:18	DLK	460-00-4		
Dibromofluoromethane (S)	93	%		1.0	06/24/02 22:18	DLK			
1,2-Dichloroethane-d4 (S)	94	%		1.0	06/24/02 22:18	DLK	17060-07-0		

Laboratory Certification IDs
NC Wastewater 12
NC Drinking Water 37706
SC 99006

REPORT OF LABORATORY ANALYSIS
This report shall not be reproduced, except in full,
without the written consent of Pace Analytical Services, Inc.

Laboratory Certification IDs
LA Wastewater 04034
VA Drinking Water 213
FL NELAP E87627

Pace Analytical™
www.pacelabs.com

Pace Analytical Services, Inc.
9800 Kincey Avenue, Suite 100
Huntersville, NC 28078
Phone: 704.875.9092
Fax: 704.875.9091

Lab Project Number: 9233669
Client Project ID: Former Worth/NC101047.0002

Lab Sample No: 922322425 Project Sample Number: 9233669-002 Date Collected: 06/12/02 15:30
Client Sample ID: MW-2 Matrix: Water Date Received: 06/13/02 10:40

Parameters	Results	Units	Report Limit	DF	Analyzed	By	CAS No.	Qual	RegLmt
Metals									
Trace ICP Metals	Prep/Method: / EPA 200.7								
Iron	6.0	mg/l	0.050	1.0	06/21/02 03:31	DJR	7439-89-6		
Manganese	6.6	mg/l	0.0050	1.0	06/21/02 03:31	DJR	7439-96-5		
Date Digested					06/19/02				
Wet Chemistry									
Ion Chromatography	Method: EPA 300.0								
Chloride	170	mg/l	5.0	5.0	06/13/02	CDE	16887-00-6		
Nitrate	ND	mg/l	0.10	1.0	06/13/02	CDE			
Nitrite	ND	mg/l	0.10	1.0	06/13/02	CDE			
Sulfate	36.	mg/l	5.0	5.0	06/13/02	CDE			
Alkalinity, Total	Method: EPA 310.1								
Alkalinity, Total	260	mg/l	1.0	1.0	06/14/02	HEH			
Ammonia	Method: EPA 350.1								
Nitrogen, Ammonia	ND	mg/l	0.10	1.0	06/13/02	BYH	7727-37-9		
Sulfide, Total	Method: EPA 376.2								
Sulfide	ND	mg/l	0.050	1.0	06/14/02	HEH			
Biochemical Oxygen Demand, 5 d	Prep/Method: / EPA 405.1								
BOD, 5 day	7.6	mg/l	2.0	1.0	06/18/02	JBK			
Date Prepared					06/13/02				
Chemical Oxygen Demand	Method: EPA 410.4								
Chemical Oxygen Demand	150	mg/l	25.	1.0	06/14/02	HEH			
GC/MS Volatiles									
GC/MS VOCs by 8260	Method: EPA 8260								
Acetone	ND	ug/l	50000	500	06/21/02 00:59	DLK	67-64-1		
Benzene	ND	ug/l	2500	500	06/21/02 00:59	DLK	71-43-2		
Bromobenzene	ND	ug/l	2500	500	06/21/02 00:59	DLK	108-86-1		
Bromochloromethane	ND	ug/l	2500	500	06/21/02 00:59	DLK	74-97-5		
Bromodichloromethane	ND	ug/l	2500	500	06/21/02 00:59	DLK	75-27-4		
Bromoform	ND	ug/l	2500	500	06/21/02 00:59	DLK	75-25-2		
Bromomethane	ND	ug/l	5000	500	06/21/02 00:59	DLK	74-83-9		
2-Butanone (MEK)	ND	ug/l	50000	500	06/21/02 00:59	DLK	78-93-3		

Laboratory Certification IDs
NC Wastewater 12
NC Drinking Water 37706
SC 99006

REPORT OF LABORATORY ANALYSIS
This report shall not be reproduced, except in full,
without the written consent of Pace Analytical Services, Inc.

Laboratory Certification IDs
LA Wastewater 04034
VA Drinking Water 213
FL NELAP E87627

Pace Analytical™
www.pacelabs.com

Pace Analytical Services, Inc.
9800 Kincey Avenue, Suite 100
Huntersville, NC 28078
Phone: 704.875.9092
Fax: 704.875.9091

Lab Project Number: 9233669
Client Project ID: Former Worth/NC101047.0002

Lab Sample No: 922322425 Project Sample Number: 9233669-002 Date Collected: 06/12/02 15:30
Client Sample ID: MW-2 Matrix: Water Date Received: 06/13/02 10:40

Parameters	Results	Units	Report Limit	DF	Analyzed	By	CAS No.	Qual	RegLmt
n-Butylbenzene	ND	ug/l	2500	500	06/21/02 00:59	DLK	104-51-8		
sec-Butylbenzene	ND	ug/l	2500	500	06/21/02 00:59	DLK	135-98-8		
tert-Butylbenzene	ND	ug/l	2500	500	06/21/02 00:59	DLK	98-06-6		
Carbon disulfide	ND	ug/l	5000	500	06/21/02 00:59	DLK	75-15-0		
Carbon tetrachloride	ND	ug/l	2500	500	06/21/02 00:59	DLK	56-23-5		
Chlorobenzene	ND	ug/l	2500	500	06/21/02 00:59	DLK	108-90-7		
Chloroethane	ND	ug/l	5000	500	06/21/02 00:59	DLK	75-00-3		
Chloroform	ND	ug/l	2500	500	06/21/02 00:59	DLK	67-66-3		
Chloromethane	ND	ug/l	5000	500	06/21/02 00:59	DLK	74-87-3		
2-Chlorotoluene	ND	ug/l	2500	500	06/21/02 00:59	DLK	95-49-8		
4-Chlorotoluene	ND	ug/l	2500	500	06/21/02 00:59	DLK	106-43-4		
1,2-Dibromo-3-chloropropane	ND	ug/l	2500	500	06/21/02 00:59	DLK	96-12-8		
Dibromochloromethane	ND	ug/l	2500	500	06/21/02 00:59	DLK	124-48-1		
1,2-Dibromoethane (EDB)	ND	ug/l	2500	500	06/21/02 00:59	DLK	106-93-4		
Dibromomethane	ND	ug/l	2500	500	06/21/02 00:59	DLK	74-95-3		
1,2-Dichlorobenzene	ND	ug/l	2500	500	06/21/02 00:59	DLK	95-50-1		
1,3-Dichlorobenzene	ND	ug/l	2500	500	06/21/02 00:59	DLK	541-73-1		
1,4-Dichlorobenzene	ND	ug/l	2500	500	06/21/02 00:59	DLK	106-46-7		
Dichlorodifluoromethane	ND	ug/l	5000	500	06/21/02 00:59	DLK	75-71-8		
1,1-Dichloroethane	ND	ug/l	2500	500	06/21/02 00:59	DLK	75-34-3		
1,2-Dichloroethane	ND	ug/l	2500	500	06/21/02 00:59	DLK	107-06-2		
1,1-Dichloroethene	ND	ug/l	2500	500	06/21/02 00:59	DLK	75-35-4		
cis-1,2-Dichloroethene	88000	ug/l	5000	1000	06/21/02 00:59	DLK	156-59-2		
trans-1,2-Dichloroethene	ND	ug/l	2500	500	06/21/02 00:59	DLK	156-60-5		
1,2-Dichloropropane	ND	ug/l	2500	500	06/21/02 00:59	DLK	78-87-5		
1,3-Dichloropropane	ND	ug/l	2500	500	06/21/02 00:59	DLK	142-28-9		
2,2-Dichloropropane	ND	ug/l	2500	500	06/21/02 00:59	DLK	594-20-7		
1,1-Dichloropropene	ND	ug/l	2500	500	06/21/02 00:59	DLK	563-58-6		
Diisopropyl ether	ND	ug/l	2500	500	06/21/02 00:59	DLK	108-20-3		
Ethylbenzene	2600	ug/l	2500	500	06/21/02 00:59	DLK	100-41-4		
Hexachloro-1,3-butadiene	ND	ug/l	2500	500	06/21/02 00:59	DLK	87-68-3		
Isopropylbenzene (Cumene)	ND	ug/l	2500	500	06/21/02 00:59	DLK	98-82-8		
p-Isopropyltoluene	ND	ug/l	2500	500	06/21/02 00:59	DLK	99-87-6		
Methylene chloride	ND	ug/l	2500	500	06/21/02 00:59	DLK	75-09-2		
4-Methyl-2-pentanone (MIBK)	ND	ug/l	25000	500	06/21/02 00:59	DLK	108-10-1		
Methyl-tert-butyl ether	ND	ug/l	2500	500	06/21/02 00:59	DLK	1634-04-4		
Naphthalene	ND	ug/l	2500	500	06/21/02 00:59	DLK	91-20-3		
n-Propylbenzene	ND	ug/l	2500	500	06/21/02 00:59	DLK	103-65-1		
Styrene	ND	ug/l	2500	500	06/21/02 00:59	DLK	100-42-5		

Laboratory Certification IDs
NC Wastewater 12
NC Drinking Water 37706
SC 99006

REPORT OF LABORATORY ANALYSIS

This report shall not be reproduced, except in full,
without the written consent of Pace Analytical Services, Inc.

Laboratory Certification IDs
LA Wastewater 04034
VA Drinking Water 213
FL NELAP E87627

Pace Analytical™
www.pacelabs.com

Pace Analytical Services, Inc.
9800 Kincey Avenue, Suite 100
Huntersville, NC 28078
Phone: 704.875.9092
Fax: 704.875.9091

Lab Project Number: 9233669
Client Project ID: Former Worth/NC101047.0002

Lab Sample No: 922322425 Project Sample Number: 9233669-002 Date Collected: 06/12/02 15:30
Client Sample ID: MW-2 Matrix: Water Date Received: 06/13/02 10:40

Parameters	Results	Units	Report Limit	DF	Analyzed	By	CAS No.	Qual	RegLmt
1,1,1,2-Tetrachloroethane	ND	ug/l	2500	500	06/21/02 00:59	DLK	630-20-6		
1,1,2,2-Tetrachloroethane	ND	ug/l	2500	500	06/21/02 00:59	DLK	79-34-5		
Tetrachloroethene	5800	ug/l	2500	500	06/21/02 00:59	DLK	127-18-4		
Tetrahydrofuran	ND	ug/l	25000	500	06/21/02 00:59	DLK	109-99-9		
Toluene	ND	ug/l	2500	500	06/21/02 00:59	DLK	108-88-3		
1,2,3-Trichlorobenzene	ND	ug/l	2500	500	06/21/02 00:59	DLK	87-61-6		
1,2,4-Trichlorobenzene	ND	ug/l	2500	500	06/21/02 00:59	DLK	120-82-1		
1,1,1-Trichloroethane	ND	ug/l	2500	500	06/21/02 00:59	DLK	71-55-6		
1,1,2-Trichloroethane	ND	ug/l	2500	500	06/21/02 00:59	DLK	79-00-5		
Trichloroethene	54000	ug/l	2500	500	06/21/02 00:59	DLK	79-01-6		
Trichlorofluoromethane	ND	ug/l	5000	500	06/21/02 00:59	DLK	75-69-4		
1,2,3-Trichloropropane	ND	ug/l	2500	500	06/21/02 00:59	DLK	96-18-4		
1,2,4-Trimethylbenzene	ND	ug/l	2500	500	06/21/02 00:59	DLK	95-63-6		
1,3,5-Trimethylbenzene	ND	ug/l	2500	500	06/21/02 00:59	DLK	108-67-8		
Vinyl chloride	ND	ug/l	5000	500	06/21/02 00:59	DLK	75-01-4		
m&p-Xylene	7100	ug/l	5000	500	06/21/02 00:59	DLK			
o-Xylene	ND	ug/l	2500	500	06/21/02 00:59	DLK	95-47-6		
Toluene-d8 (S)	103	%		1.0	06/21/02 00:59	DLK	2037-26-5		
4-Bromofluorobenzene (S)	95	%		1.0	06/21/02 00:59	DLK	460-00-4		
Dibromofluoromethane (S)	95	%		1.0	06/21/02 00:59	DLK			
1,2-Dichloroethane-d4 (S)	91	%		1.0	06/21/02 00:59	DLK	17060-07-0		

Laboratory Certification IDs
NC Wastewater 12
NC Drinking Water 37706
SC 99006

REPORT OF LABORATORY ANALYSIS
This report shall not be reproduced, except in full,
without the written consent of Pace Analytical Services, Inc.

Laboratory Certification IDs
LA Wastewater 04034
VA Drinking Water 213
FL NELAP E87627

Pace Analytical™
www.pacelabs.com

Pace Analytical Services, Inc.
9800 Kincey Avenue, Suite 100
Huntersville, NC 28078
Phone: 704.875.9092
Fax: 704.875.9091

Lab Project Number: 9233669
Client Project ID: Former Worth/NC101047.0002

Lab Sample No: 922322433 Project Sample Number: 9233669-003 Date Collected: 06/12/02 16:45
Client Sample ID: MW-3 Matrix: Water Date Received: 06/13/02 10:40

Parameters	Results	Units	Report Limit	DF	Analyzed	By	CAS No.	Qual	RegLmt
GC/MS Volatiles									
GC/MS VOCs by 8260	Method: EPA 8260								
Acetone	ND	ug/l	10000	100	06/20/02 22:57	DLK	67-64-1		
Benzene	ND	ug/l	500	100	06/20/02 22:57	DLK	71-43-2		
Bromobenzene	ND	ug/l	500	100	06/20/02 22:57	DLK	108-86-1		
Bromochloromethane	ND	ug/l	500	100	06/20/02 22:57	DLK	74-97-5		
Bromodichloromethane	ND	ug/l	500	100	06/20/02 22:57	DLK	75-27-4		
Bromoform	ND	ug/l	500	100	06/20/02 22:57	DLK	75-25-2		
Bromomethane	ND	ug/l	1000	100	06/20/02 22:57	DLK	74-83-9		
2-Butanone (MEK)	ND	ug/l	10000	100	06/20/02 22:57	DLK	78-93-3		
n-Butylbenzene	ND	ug/l	500	100	06/20/02 22:57	DLK	104-51-8		
sec-Butylbenzene	ND	ug/l	500	100	06/20/02 22:57	DLK	135-98-8		
tert-Butylbenzene	ND	ug/l	500	100	06/20/02 22:57	DLK	98-06-6		
Carbon disulfide	ND	ug/l	1000	100	06/20/02 22:57	DLK	75-15-0		
Carbon tetrachloride	ND	ug/l	500	100	06/20/02 22:57	DLK	56-23-5		
Chlorobenzene	ND	ug/l	500	100	06/20/02 22:57	DLK	108-90-7		
Chloroethane	ND	ug/l	1000	100	06/20/02 22:57	DLK	75-00-3		
Chloroform	ND	ug/l	500	100	06/20/02 22:57	DLK	67-66-3		
Chloromethane	ND	ug/l	1000	100	06/20/02 22:57	DLK	74-87-3		
2-Chlorotoluene	ND	ug/l	500	100	06/20/02 22:57	DLK	95-49-8		
4-Chlorotoluene	ND	ug/l	500	100	06/20/02 22:57	DLK	106-43-4		
1,2-Dibromo-3-chloropropane	ND	ug/l	500	100	06/20/02 22:57	DLK	96-12-8		
Dibromochloromethane	ND	ug/l	500	100	06/20/02 22:57	DLK	124-48-1		
1,2-Dibromoethane (EDB)	ND	ug/l	500	100	06/20/02 22:57	DLK	106-93-4		
Dibromomethane	ND	ug/l	500	100	06/20/02 22:57	DLK	74-95-3		
1,2-Dichlorobenzene	ND	ug/l	500	100	06/20/02 22:57	DLK	95-50-1		
1,3-Dichlorobenzene	ND	ug/l	500	100	06/20/02 22:57	DLK	541-73-1		
1,4-Dichlorobenzene	ND	ug/l	500	100	06/20/02 22:57	DLK	106-46-7		
Dichlorodifluoromethane	ND	ug/l	1000	100	06/20/02 22:57	DLK	75-71-8		
1,1-Dichloroethane	ND	ug/l	500	100	06/20/02 22:57	DLK	75-34-3		
1,2-Dichloroethane	ND	ug/l	500	100	06/20/02 22:57	DLK	107-06-2		
1,1-Dichloroethene	1700	ug/l	500	100	06/20/02 22:57	DLK	75-35-4		
cis-1,2-Dichloroethene	ND	ug/l	500	100	06/20/02 22:57	DLK	156-59-2		
trans-1,2-Dichloroethene	ND	ug/l	500	100	06/20/02 22:57	DLK	156-60-5		
1,2-Dichloropropane	ND	ug/l	500	100	06/20/02 22:57	DLK	78-87-5		
1,3-Dichloropropane	ND	ug/l	500	100	06/20/02 22:57	DLK	142-28-9		
2,2-Dichloropropane	ND	ug/l	500	100	06/20/02 22:57	DLK	594-20-7		
1,1-Dichloropropene	ND	ug/l	500	100	06/20/02 22:57	DLK	563-58-6		
Diisopropyl ether	ND	ug/l	500	100	06/20/02 22:57	DLK	108-20-3		

Laboratory Certification IDs
NC Wastewater 12
NC Drinking Water 37706
SC 99006

REPORT OF LABORATORY ANALYSIS
This report shall not be reproduced, except in full,
without the written consent of Pace Analytical Services, Inc.

Laboratory Certification IDs
LA Wastewater 04034
VA Drinking Water 213
FL NELAP E87627

Pace Analytical™
www.pacelabs.com

Pace Analytical Services, Inc.
9800 Kincey Avenue, Suite 100
Huntersville, NC 28078
Phone: 704.875.9092
Fax: 704.875.9091

Lab Project Number: 9233669
Client Project ID: Former Worth/NC101047.0002

Lab Sample No: 922322433 Project Sample Number: 9233669-003 Date Collected: 06/12/02 16:45
Client Sample ID: MW-3 Matrix: Water Date Received: 06/13/02 10:40

Parameters	Results	Units	Report Limit	DF	Analyzed	By	CAS No.	Qual	RegLmt
Ethylbenzene	ND	ug/l	500	100	06/20/02 22:57	DLK	100-41-4		
Hexachloro-1,3-butadiene	ND	ug/l	500	100	06/20/02 22:57	DLK	87-68-3		
Isopropylbenzene (Cumene)	ND	ug/l	500	100	06/20/02 22:57	DLK	98-82-8		
p-Isopropyltoluene	ND	ug/l	500	100	06/20/02 22:57	DLK	99-87-6		
Methylene chloride	ND	ug/l	500	100	06/20/02 22:57	DLK	75-09-2		
4-Methyl-2-pentanone (MIBK)	ND	ug/l	5000	100	06/20/02 22:57	DLK	108-10-1		
Methyl-tert-butyl ether	ND	ug/l	500	100	06/20/02 22:57	DLK	1634-04-4		
Naphthalene	ND	ug/l	500	100	06/20/02 22:57	DLK	91-20-3		
n-Propylbenzene	ND	ug/l	500	100	06/20/02 22:57	DLK	103-65-1		
Styrene	ND	ug/l	500	100	06/20/02 22:57	DLK	100-42-5		
1,1,1,2-Tetrachloroethane	ND	ug/l	500	100	06/20/02 22:57	DLK	630-20-6		
1,1,2,2-Tetrachloroethane	ND	ug/l	500	100	06/20/02 22:57	DLK	79-34-5		
Tetrachloroethene	3100	ug/l	500	100	06/20/02 22:57	DLK	127-18-4		
Tetrahydrofuran	ND	ug/l	5000	100	06/20/02 22:57	DLK	109-99-9		
Toluene	ND	ug/l	500	100	06/20/02 22:57	DLK	108-88-3		
1,2,3-Trichlorobenzene	ND	ug/l	500	100	06/20/02 22:57	DLK	87-61-6		
1,2,4-Trichlorobenzene	ND	ug/l	500	100	06/20/02 22:57	DLK	120-82-1		
1,1,1-Trichloroethane	ND	ug/l	500	100	06/20/02 22:57	DLK	71-55-6		
1,1,2-Trichloroethane	ND	ug/l	500	100	06/20/02 22:57	DLK	79-00-5		
Trichloroethene	77000	ug/l	2500	500	06/20/02 22:57	DLK	79-01-6		
Trichlorofluoromethane	ND	ug/l	1000	100	06/20/02 22:57	DLK	75-69-4		
1,2,3-Trichloropropane	ND	ug/l	500	100	06/20/02 22:57	DLK	96-18-4		
1,2,4-Trimethylbenzene	ND	ug/l	500	100	06/20/02 22:57	DLK	95-63-6		
1,3,5-Trimethylbenzene	ND	ug/l	500	100	06/20/02 22:57	DLK	108-67-8		
Vinyl chloride	ND	ug/l	1000	100	06/20/02 22:57	DLK	75-01-4		
m&p-Xylene	ND	ug/l	1000	100	06/20/02 22:57	DLK			
o-Xylene	ND	ug/l	500	100	06/20/02 22:57	DLK	95-47-6		
Toluene-d8 (S)	103	%		1.0	06/20/02 22:57	DLK	2037-26-5		
4-Bromofluorobenzene (S)	96	%		1.0	06/20/02 22:57	DLK	460-00-4		
Dibromofluoromethane (S)	101	%		1.0	06/20/02 22:57	DLK			
1,2-Dichloroethane-d4 (S)	99	%		1.0	06/20/02 22:57	DLK	17060-07-0		

Laboratory Certification IDs
NC Wastewater 12
NC Drinking Water 37706
SC 99006

REPORT OF LABORATORY ANALYSIS
This report shall not be reproduced, except in full,
without the written consent of Pace Analytical Services, Inc.

Laboratory Certification IDs
LA Wastewater 04034
VA Drinking Water 213
FL NELAP E87627

Pace Analytical™
www.pacelabs.com

Pace Analytical Services, Inc.
9800 Kincey Avenue, Suite 100
Huntersville, NC 28078
Phone: 704.875.9092
Fax: 704.875.9091

Lab Project Number: 9233669
Client Project ID: Former Worth/NC101047.0002

Lab Sample No: 922322441 Project Sample Number: 9233669-004 Date Collected: 06/12/02 13:00
Client Sample ID: MW-4 Matrix: Water Date Received: 06/13/02 10:40

Parameters	Results	Units	Report Limit	DF	Analyzed	By	CAS No.	Qual	RegLmt
Metals									
Trace ICP Metals	Prep/Method: / EPA 200.7								
Iron	1.4	mg/l	0.050	1.0	06/21/02 03:36	DJR	7439-89-6		
Manganese	0.37	mg/l	0.0050	1.0	06/21/02 03:36	DJR	7439-96-5		
Date Digested					06/19/02				
Wet Chemistry									
Ion Chromatography	Method: EPA 300.0								
Chloride	93.	mg/l	5.0	5.0	06/13/02	CDE	16887-00-6		
Nitrate	ND	mg/l	0.10	1.0	06/13/02	CDE			
Nitrite	ND	mg/l	0.10	1.0	06/13/02	CDE			
Sulfate	11.	mg/l	1.0	1.0	06/13/02	CDE			
Alkalinity, Total	Method: EPA 310.1								
Alkalinity, Total	360	mg/l	1.0	1.0	06/14/02	HEH			
Ammonia	Method: EPA 350.1								
Nitrogen, Ammonia	0.14	mg/l	0.10	1.0	06/13/02	BYH	7727-37-9		
Sulfide, Total	Method: EPA 376.2								
Sulfide	ND	mg/l	0.050	1.0	06/14/02	HEH			
Biochemical Oxygen Demand, 5 d	Prep/Method: / EPA 405.1								
BOD, 5 day	ND	mg/l	2.0	1.0	06/18/02	JBK			
Date Prepared					06/13/02				
Chemical Oxygen Demand	Method: EPA 410.4								
Chemical Oxygen Demand	49.	mg/l	25.	1.0	06/14/02	HEH			
GC/MS Volatiles									
GC/MS VOCs by 8260	Method: EPA 8260								
Acetone	ND	ug/l	100	1.0	06/15/02 03:52	DLK	67-64-1		
Benzene	23.	ug/l	5.0	1.0	06/15/02 03:52	DLK	71-43-2		
Bromobenzene	ND	ug/l	5.0	1.0	06/15/02 03:52	DLK	108-86-1		
Bromochloromethane	ND	ug/l	5.0	1.0	06/15/02 03:52	DLK	74-97-5		
Bromodichloromethane	ND	ug/l	5.0	1.0	06/15/02 03:52	DLK	75-27-4		
Bromoform	ND	ug/l	5.0	1.0	06/15/02 03:52	DLK	75-25-2		
Bromomethane	ND	ug/l	10.	1.0	06/15/02 03:52	DLK	74-83-9		
2-Butanone (MEK)	ND	ug/l	100	1.0	06/15/02 03:52	DLK	78-93-3		

Laboratory Certification IDs
NC Wastewater 12
NC Drinking Water 37706
SC 99006

REPORT OF LABORATORY ANALYSIS
This report shall not be reproduced, except in full,
without the written consent of Pace Analytical Services, Inc.

Laboratory Certification IDs
LA Wastewater 04034
VA Drinking Water 213
FL NELAP E87627

Pace Analytical™
www.pacelabs.com

Pace Analytical Services, Inc.
9800 Kincey Avenue, Suite 100
Huntersville, NC 28078
Phone: 704.875.9092
Fax: 704.875.9091

Lab Project Number: 9233669
Client Project ID: Former Worth/NC101047.0002

Lab Sample No: 922322441 Project Sample Number: 9233669-004 Date Collected: 06/12/02 13:00
Client Sample ID: MW-4 Matrix: Water Date Received: 06/13/02 10:40

Parameters	Results	Units	Report Limit	DF	Analyzed	By	CAS No.	Qual	RegLmt
n-Butylbenzene	ND	ug/l	5.0	1.0	06/15/02 03:52	DLK	104-51-8		
sec-Butylbenzene	ND	ug/l	5.0	1.0	06/15/02 03:52	DLK	135-98-8		
tert-Butylbenzene	ND	ug/l	5.0	1.0	06/15/02 03:52	DLK	98-06-6		
Carbon disulfide	ND	ug/l	10.	1.0	06/15/02 03:52	DLK	75-15-0		
Carbon tetrachloride	400	ug/l	5.0	1.0	06/15/02 03:52	DLK	56-23-5	1	
Chlorobenzene	ND	ug/l	5.0	1.0	06/15/02 03:52	DLK	108-90-7		
Chloroethane	ND	ug/l	10.	1.0	06/15/02 03:52	DLK	75-00-3		
Chloroform	270	ug/l	5.0	1.0	06/15/02 03:52	DLK	67-66-3	1	
Chloromethane	ND	ug/l	10.	1.0	06/15/02 03:52	DLK	74-87-3		
2-Chlorotoluene	ND	ug/l	5.0	1.0	06/15/02 03:52	DLK	95-49-8		
4-Chlorotoluene	ND	ug/l	5.0	1.0	06/15/02 03:52	DLK	106-43-4		
1,2-Dibromo-3-chloropropane	ND	ug/l	5.0	1.0	06/15/02 03:52	DLK	96-12-8		
Dibromochloromethane	ND	ug/l	5.0	1.0	06/15/02 03:52	DLK	124-48-1		
1,2-Dibromoethane (EDB)	ND	ug/l	5.0	1.0	06/15/02 03:52	DLK	106-93-4		
Dibromomethane	ND	ug/l	5.0	1.0	06/15/02 03:52	DLK	74-95-3		
1,2-Dichlorobenzene	ND	ug/l	5.0	1.0	06/15/02 03:52	DLK	95-50-1		
1,3-Dichlorobenzene	ND	ug/l	5.0	1.0	06/15/02 03:52	DLK	541-73-1		
1,4-Dichlorobenzene	ND	ug/l	5.0	1.0	06/15/02 03:52	DLK	106-46-7		
Dichlorodifluoromethane	ND	ug/l	10.	1.0	06/15/02 03:52	DLK	75-71-8		
1,1-Dichloroethane	70.	ug/l	5.0	1.0	06/15/02 03:52	DLK	75-34-3		
1,2-Dichloroethane	12.	ug/l	5.0	1.0	06/15/02 03:52	DLK	107-06-2		
1,1-Dichloroethene	1300	ug/l	5.0	1.0	06/15/02 03:52	DLK	75-35-4	1	
cis-1,2-Dichloroethene	39000	ug/l	5000	1000	06/15/02 03:52	DLK	156-59-2		
trans-1,2-Dichloroethene	620	ug/l	5.0	1.0	06/15/02 03:52	DLK	156-60-5	1	
1,2-Dichloropropane	650	ug/l	5.0	1.0	06/15/02 03:52	DLK	78-87-5	1	
1,3-Dichloropropane	ND	ug/l	5.0	1.0	06/15/02 03:52	DLK	142-28-9		
2,2-Dichloropropane	ND	ug/l	5.0	1.0	06/15/02 03:52	DLK	594-20-7		
1,1-Dichloropropene	ND	ug/l	5.0	1.0	06/15/02 03:52	DLK	563-58-6		
Diisopropyl ether	ND	ug/l	5.0	1.0	06/15/02 03:52	DLK	108-20-3		
Ethylbenzene	ND	ug/l	5.0	1.0	06/15/02 03:52	DLK	100-41-4		
Hexachloro-1,3-butadiene	ND	ug/l	5.0	1.0	06/15/02 03:52	DLK	87-68-3		
Isopropylbenzene (Cumene)	20.	ug/l	5.0	1.0	06/15/02 03:52	DLK	98-82-8		
p-Isopropyltoluene	ND	ug/l	5.0	1.0	06/15/02 03:52	DLK	99-87-6		
Methylene chloride	11.	ug/l	5.0	1.0	06/15/02 03:52	DLK	75-09-2		
4-Methyl-2-pentanone (MIBK)	ND	ug/l	50.	1.0	06/15/02 03:52	DLK	108-10-1		
Methyl-tert-butyl ether	ND	ug/l	5.0	1.0	06/15/02 03:52	DLK	1634-04-4		
Naphthalene	ND	ug/l	5.0	1.0	06/15/02 03:52	DLK	91-20-3		
n-Propylbenzene	ND	ug/l	5.0	1.0	06/15/02 03:52	DLK	103-65-1		
Styrene	ND	ug/l	5.0	1.0	06/15/02 03:52	DLK	100-42-5		

Laboratory Certification IDs
NC Wastewater 12
NC Drinking Water 37706
SC 99006

REPORT OF LABORATORY ANALYSIS
This report shall not be reproduced, except in full,
without the written consent of Pace Analytical Services, Inc.

Laboratory Certification IDs
LA Wastewater 04034
VA Drinking Water 213
FL NELAP E87627

Pace Analytical™
www.pacelabs.com

Pace Analytical Services, Inc.
9800 Kincey Avenue, Suite 100
Huntersville, NC 28078
Phone: 704.875.9092
Fax: 704.875.9091

Lab Project Number: 9233669
Client Project ID: Former Worth/NC101047.0002

Lab Sample No: 922322441 Project Sample Number: 9233669-004 Date Collected: 06/12/02 13:00
Client Sample ID: MW-4 Matrix: Water Date Received: 06/13/02 10:40

Parameters	Results	Units	Report Limit	DF	Analyzed	By	CAS No.	Qual	RegLmt
1,1,1,2-Tetrachloroethane	ND	ug/l	5.0	1.0	06/15/02 03:52	DLK	630-20-6		
1,1,2,2-Tetrachloroethane	ND	ug/l	5.0	1.0	06/15/02 03:52	DLK	79-34-5		
Tetrachloroethene	2200	ug/l	5.0	1.0	06/15/02 03:52	DLK	127-18-4	1	
Tetrahydrofuran	ND	ug/l	50.	1.0	06/15/02 03:52	DLK	109-99-9		
Toluene	24.	ug/l	5.0	1.0	06/15/02 03:52	DLK	108-88-3		
1,2,3-Trichlorobenzene	ND	ug/l	5.0	1.0	06/15/02 03:52	DLK	87-61-6		
1,2,4-Trichlorobenzene	ND	ug/l	5.0	1.0	06/15/02 03:52	DLK	120-82-1		
1,1,1-Trichloroethane	9.6	ug/l	5.0	1.0	06/15/02 03:52	DLK	71-55-6		
1,1,2-Trichloroethane	30.	ug/l	5.0	1.0	06/15/02 03:52	DLK	79-00-5		
Trichloroethene.	64000	ug/l	5000	1000	06/15/02 03:52	DLK	79-01-6		
Trichlorofluoromethane	ND	ug/l	10.	1.0	06/15/02 03:52	DLK	75-69-4		
1,2,3-Trichloropropane	ND	ug/l	5.0	1.0	06/15/02 03:52	DLK	96-18-4		
1,2,4-Trimethylbenzene	ND	ug/l	5.0	1.0	06/15/02 03:52	DLK	95-63-6		
1,3,5-Trimethylbenzene	ND	ug/l	5.0	1.0	06/15/02 03:52	DLK	108-67-8		
Vinyl chloride	ND	ug/l	10.	1.0	06/15/02 03:52	DLK	75-01-4		
m&p-Xylene	48.	ug/l	10.	1.0	06/15/02 03:52	DLK			
o-Xylene	410	ug/l	5.0	1.0	06/15/02 03:52	DLK	95-47-6	1	
Toluene-d8 (S)	85	%		1.0	06/15/02 03:52	DLK	2037-26-5		
4-Bromofluorobenzene (S)	101	%		1.0	06/15/02 03:52	DLK	460-00-4		
Dibromofluoromethane (S)	98	%		1.0	06/15/02 03:52	DLK			
1,2-Dichloroethane-d4 (S)	89	%		1.0	06/15/02 03:52	DLK	17060-07-0		

Laboratory Certification IDs
NC Wastewater 12
NC Drinking Water 37706
SC 99006

REPORT OF LABORATORY ANALYSIS
This report shall not be reproduced, except in full,
without the written consent of Pace Analytical Services, Inc.

Laboratory Certification IDs
LA Wastewater 04034
VA Drinking Water 213
FL NELAP E87627

Pace Analytical™
www.pacelabs.com

Pace Analytical Services, Inc.
9800 Kincey Avenue, Suite 100
Huntersville, NC 28078
Phone: 704.875.9092
Fax: 704.875.9091

Lab Project Number: 9233669
Client Project ID: Former Worth/NC101047.0002

Lab Sample No: 922322458 Project Sample Number: 9233669-005 Date Collected: 06/12/02 17:20
Client Sample ID: MW-5 Matrix: Water Date Received: 06/13/02 10:40

Parameters	Results	Units	Report Limit	DF	Analyzed	By	CAS No.	Qual	RegLmt
GC/MS Volatiles									
GC/MS VOCs by 8260	Method: EPA 8260								
Acetone	ND	ug/l	50000	500	06/20/02 23:58	DLK	67-64-1		
Benzene	ND	ug/l	2500	500	06/20/02 23:58	DLK	71-43-2		
Bromobenzene	ND	ug/l	2500	500	06/20/02 23:58	DLK	108-86-1		
Bromochloromethane	ND	ug/l	2500	500	06/20/02 23:58	DLK	74-97-5		
Bromodichloromethane	ND	ug/l	2500	500	06/20/02 23:58	DLK	75-27-4		
Bromoform	ND	ug/l	2500	500	06/20/02 23:58	DLK	75-25-2		
Bromomethane	ND	ug/l	5000	500	06/20/02 23:58	DLK	74-83-9		
2-Butanone (MEK)	ND	ug/l	50000	500	06/20/02 23:58	DLK	78-93-3		
n-Butylbenzene	ND	ug/l	2500	500	06/20/02 23:58	DLK	104-51-8		
sec-Butylbenzene	ND	ug/l	2500	500	06/20/02 23:58	DLK	135-98-8		
tert-Butylbenzene	ND	ug/l	2500	500	06/20/02 23:58	DLK	98-06-6		
Carbon disulfide	ND	ug/l	5000	500	06/20/02 23:58	DLK	75-15-0		
Carbon tetrachloride	ND	ug/l	2500	500	06/20/02 23:58	DLK	56-23-5		
Chlorobenzene	ND	ug/l	2500	500	06/20/02 23:58	DLK	108-90-7		
Chloroethane	ND	ug/l	5000	500	06/20/02 23:58	DLK	75-00-3		
Chloroform	55000	ug/l	2500	500	06/20/02 23:58	DLK	67-66-3		
Chloromethane	ND	ug/l	5000	500	06/20/02 23:58	DLK	74-87-3		
2-Chlorotoluene	ND	ug/l	2500	500	06/20/02 23:58	DLK	95-49-8		
4-Chlorotoluene	ND	ug/l	2500	500	06/20/02 23:58	DLK	106-43-4		
1,2-Dibromo-3-chloropropane	ND	ug/l	2500	500	06/20/02 23:58	DLK	96-12-8		
Dibromochloromethane	ND	ug/l	2500	500	06/20/02 23:58	DLK	124-48-1		
1,2-Dibromoethane (EDB)	ND	ug/l	2500	500	06/20/02 23:58	DLK	106-93-4		
Dibromomethane	ND	ug/l	2500	500	06/20/02 23:58	DLK	74-95-3		
1,2-Dichlorobenzene	ND	ug/l	2500	500	06/20/02 23:58	DLK	95-50-1		
1,3-Dichlorobenzene	ND	ug/l	2500	500	06/20/02 23:58	DLK	541-73-1		
1,4-Dichlorobenzene	ND	ug/l	2500	500	06/20/02 23:58	DLK	106-46-7		
Dichlorodifluoromethane	ND	ug/l	5000	500	06/20/02 23:58	DLK	75-71-8		
1,1-Dichloroethane	ND	ug/l	2500	500	06/20/02 23:58	DLK	75-34-3		
1,2-Dichloroethane	ND	ug/l	2500	500	06/20/02 23:58	DLK	107-06-2		
1,1-Dichloroethene	12000	ug/l	2500	500	06/20/02 23:58	DLK	75-35-4		
cis-1,2-Dichloroethene	43000	ug/l	2500	500	06/20/02 23:58	DLK	156-59-2		
trans-1,2-Dichloroethene	ND	ug/l	2500	500	06/20/02 23:58	DLK	156-60-5		
1,2-Dichloropropane	ND	ug/l	2500	500	06/20/02 23:58	DLK	78-87-5		
1,3-Dichloropropane	ND	ug/l	2500	500	06/20/02 23:58	DLK	142-28-9		
2,2-Dichloropropane	ND	ug/l	2500	500	06/20/02 23:58	DLK	594-20-7		
1,1-Dichloropropene	ND	ug/l	2500	500	06/20/02 23:58	DLK	563-58-6		
Diisopropyl ether	ND	ug/l	2500	500	06/20/02 23:58	DLK	108-20-3		

Laboratory Certification IDs
NC Wastewater 12
NC Drinking Water 37706
SC 99006

REPORT OF LABORATORY ANALYSIS
This report shall not be reproduced, except in full,
without the written consent of Pace Analytical Services, Inc.

Laboratory Certification IDs
LA Wastewater 04034
VA Drinking Water 213
FL NELAP E87627

Pace Analytical™
www.pacelabs.com

Pace Analytical Services, Inc.
9800 Kincey Avenue, Suite 100
Huntersville, NC 28078
Phone: 704.875.9092
Fax: 704.875.9091

Lab Project Number: 9233669
Client Project ID: Former Worth/NC101047.0002

Lab Sample No: 922322458 Project Sample Number: 9233669-005 Date Collected: 06/12/02 17:20
Client Sample ID: MW-5 Matrix: Water Date Received: 06/13/02 10:40

Parameters	Results	Units	Report Limit	DF	Analyzed	By	CAS No.	Qual	RegLmt
Ethylbenzene	ND	ug/l	2500	500	06/20/02 23:58	DLK	100-41-4		
Hexachloro-1,3-butadiene	ND	ug/l	2500	500	06/20/02 23:58	DLK	87-68-3		
Isopropylbenzene (Cumene)	ND	ug/l	2500	500	06/20/02 23:58	DLK	98-82-8		
p-Isopropyltoluene	ND	ug/l	2500	500	06/20/02 23:58	DLK	99-87-6		
Methylene chloride	2500	ug/l	2500	500	06/20/02 23:58	DLK	75-09-2		
4-Methyl-2-pentanone (MIBK)	ND	ug/l	25000	500	06/20/02 23:58	DLK	108-10-1		
Methyl-tert-butyl ether	ND	ug/l	2500	500	06/20/02 23:58	DLK	1634-04-4		
Naphthalene	ND	ug/l	2500	500	06/20/02 23:58	DLK	91-20-3		
n-Propylbenzene	ND	ug/l	2500	500	06/20/02 23:58	DLK	103-65-1		
Styrene	ND	ug/l	2500	500	06/20/02 23:58	DLK	100-42-5		
1,1,1,2-Tetrachloroethane	ND	ug/l	2500	500	06/20/02 23:58	DLK	630-20-6		
1,1,2,2-Tetrachloroethane	ND	ug/l	2500	500	06/20/02 23:58	DLK	79-34-5		
Tetrachloroethene	32000	ug/l	2500	500	06/20/02 23:58	DLK	127-18-4		
Tetrahydrofuran	ND	ug/l	25000	500	06/20/02 23:58	DLK	109-99-9		
Toluene	ND	ug/l	2500	500	06/20/02 23:58	DLK	108-88-3		
1,2,3-Trichlorobenzene	ND	ug/l	2500	500	06/20/02 23:58	DLK	87-61-6		
1,2,4-Trichlorobenzene	ND	ug/l	2500	500	06/20/02 23:58	DLK	120-82-1		
1,1,1-Trichloroethane	ND	ug/l	2500	500	06/20/02 23:58	DLK	71-55-6		
1,1,2-Trichloroethane	ND	ug/l	2500	500	06/20/02 23:58	DLK	79-00-5		
Trichloroethene	36000	ug/l	2500	500	06/20/02 23:58	DLK	79-01-6		
Trichlorofluoromethane	ND	ug/l	5000	500	06/20/02 23:58	DLK	75-69-4		
1,2,3-Trichloropropane	ND	ug/l	2500	500	06/20/02 23:58	DLK	96-18-4		
1,2,4-Trimethylbenzene	ND	ug/l	2500	500	06/20/02 23:58	DLK	95-63-6		
1,3,5-Trimethylbenzene	ND	ug/l	2500	500	06/20/02 23:58	DLK	108-67-8		
Vinyl chloride	ND	ug/l	5000	500	06/20/02 23:58	DLK	75-01-4		
m&p-Xylene	ND	ug/l	5000	500	06/20/02 23:58	DLK			
o-Xylene	ND	ug/l	2500	500	06/20/02 23:58	DLK	95-47-6		
Toluene-d8 (S)	102	%		1.0	06/20/02 23:58	DLK	2037-26-5		
4-Bromofluorobenzene (S)	94	%		1.0	06/20/02 23:58	DLK	460-00-4		
Dibromofluoromethane (S)	101	%		1.0	06/20/02 23:58	DLK			
1,2-Dichloroethane-d4 (S)	94	%		1.0	06/20/02 23:58	DLK	17060-07-0		

Laboratory Certification IDs
NC Wastewater 12
NC Drinking Water 37706
SC 99006

REPORT OF LABORATORY ANALYSIS
This report shall not be reproduced, except in full,
without the written consent of Pace Analytical Services, Inc.

Laboratory Certification IDs
LA Wastewater 04034
VA Drinking Water 213
FL NELAP E87627

Pace Analytical™
www.pacelabs.com

Pace Analytical Services, Inc.
9800 Kincey Avenue, Suite 100
Huntersville, NC 28078
Phone: 704.875.9092
Fax: 704.875.9091

Lab Project Number: 9233669
Client Project ID: Former Worth/NC101047.0002

Lab Sample No: 922322466 Project Sample Number: 9233669-006 Date Collected: 06/11/02 17:20
Client Sample ID: MW-6 Matrix: Water Date Received: 06/13/02 10:40

Parameters	Results	Units	Report Limit	DF	Analyzed	By	CAS No.	Qual	RegLmt
GC/MS Volatiles									
GC/MS VOCs by 8260	Method: EPA 8260								
Acetone	ND	ug/l	100	1.0	06/14/02 14:48	DLK	67-64-1		
Benzene	ND	ug/l	5.0	1.0	06/14/02 14:48	DLK	71-43-2		
Bromobenzene	ND	ug/l	5.0	1.0	06/14/02 14:48	DLK	108-86-1		
Bromochloromethane	ND	ug/l	5.0	1.0	06/14/02 14:48	DLK	74-97-5		
Bromodichloromethane	ND	ug/l	5.0	1.0	06/14/02 14:48	DLK	75-27-4		
Bromoform	ND	ug/l	5.0	1.0	06/14/02 14:48	DLK	75-25-2		
Bromomethane	ND	ug/l	10.	1.0	06/14/02 14:48	DLK	74-83-9		
2-Butanone (MEK)	ND	ug/l	100	1.0	06/14/02 14:48	DLK	78-93-3		
n-Butylbenzene	ND	ug/l	5.0	1.0	06/14/02 14:48	DLK	104-51-8		
sec-Butylbenzene	ND	ug/l	5.0	1.0	06/14/02 14:48	DLK	135-98-8		
tert-Butylbenzene	ND	ug/l	5.0	1.0	06/14/02 14:48	DLK	98-06-6		
Carbon disulfide	ND	ug/l	10.	1.0	06/14/02 14:48	DLK	75-15-0		
Carbon tetrachloride	ND	ug/l	5.0	1.0	06/14/02 14:48	DLK	56-23-5		
Chlorobenzene	ND	ug/l	5.0	1.0	06/14/02 14:48	DLK	108-90-7		
Chloroethane	ND	ug/l	10.	1.0	06/14/02 14:48	DLK	75-00-3		
Chloroform	16.	ug/l	5.0	1.0	06/14/02 14:48	DLK	67-66-3		
Chloromethane	ND	ug/l	10.	1.0	06/14/02 14:48	DLK	74-87-3		
2-Chlorotoluene	ND	ug/l	5.0	1.0	06/14/02 14:48	DLK	95-49-8		
4-Chlorotoluene	ND	ug/l	5.0	1.0	06/14/02 14:48	DLK	106-43-4		
1,2-Dibromo-3-chloropropane	ND	ug/l	5.0	1.0	06/14/02 14:48	DLK	96-12-8		
Dibromochloromethane	ND	ug/l	5.0	1.0	06/14/02 14:48	DLK	124-48-1		
1,2-Dibromoethane (EDB)	ND	ug/l	5.0	1.0	06/14/02 14:48	DLK	106-93-4		
Dibromomethane	ND	ug/l	5.0	1.0	06/14/02 14:48	DLK	74-95-3		
1,2-Dichlorobenzene	ND	ug/l	5.0	1.0	06/14/02 14:48	DLK	95-50-1		
1,3-Dichlorobenzene	ND	ug/l	5.0	1.0	06/14/02 14:48	DLK	541-73-1		
1,4-Dichlorobenzene	ND	ug/l	5.0	1.0	06/14/02 14:48	DLK	106-46-7		
Dichlorodifluoromethane	ND	ug/l	10.	1.0	06/14/02 14:48	DLK	75-71-8		
1,1-Dichloroethane	ND	ug/l	5.0	1.0	06/14/02 14:48	DLK	75-34-3		
1,2-Dichloroethane	ND	ug/l	5.0	1.0	06/14/02 14:48	DLK	107-06-2		
1,1-Dichloroethene	73.	ug/l	5.0	1.0	06/14/02 14:48	DLK	75-35-4		
cis-1,2-Dichloroethene	66.	ug/l	5.0	1.0	06/14/02 14:48	DLK	156-59-2		
trans-1,2-Dichloroethene	ND	ug/l	5.0	1.0	06/14/02 14:48	DLK	156-60-5		
1,2-Dichloropropane	ND	ug/l	5.0	1.0	06/14/02 14:48	DLK	78-87-5		
1,3-Dichloropropane	ND	ug/l	5.0	1.0	06/14/02 14:48	DLK	142-28-9		
2,2-Dichloropropane	ND	ug/l	5.0	1.0	06/14/02 14:48	DLK	594-20-7		
1,1-Dichloropropene	ND	ug/l	5.0	1.0	06/14/02 14:48	DLK	563-58-6		
Diisopropyl ether	ND	ug/l	5.0	1.0	06/14/02 14:48	DLK	108-20-3		

Laboratory Certification IDs
NC Wastewater 12
NC Drinking Water 37706
SC 99006

REPORT OF LABORATORY ANALYSIS
This report shall not be reproduced, except in full,
without the written consent of Pace Analytical Services, Inc.

Laboratory Certification IDs
LA Wastewater 04034
VA Drinking Water 213
FL NELAP E87627

Pace Analytical™
www.pacelabs.com

Pace Analytical Services, Inc.
9800 Kincey Avenue, Suite 100
Huntersville, NC 28078
Phone: 704.875.9092
Fax: 704.875.9091

Lab Project Number: 9233669
Client Project ID: Former Worth/NC101047.0002

Lab Sample No: 922322466 Project Sample Number: 9233669-006 Date Collected: 06/11/02 17:20
Client Sample ID: MW-6 Matrix: Water Date Received: 06/13/02 10:40

Parameters	Results	Units	Report Limit	DF	Analyzed	By	CAS No.	Qual	RegLmt
Ethylbenzene	ND	ug/l	5.0	1.0	06/14/02 14:48	DLK	100-41-4		
Hexachloro-1,3-butadiene	ND	ug/l	5.0	1.0	06/14/02 14:48	DLK	87-68-3		
Isopropylbenzene (Cumene)	ND	ug/l	5.0	1.0	06/14/02 14:48	DLK	98-82-8		
p-Isopropyltoluene	ND	ug/l	5.0	1.0	06/14/02 14:48	DLK	99-87-6		
Methylene chloride	ND	ug/l	5.0	1.0	06/14/02 14:48	DLK	75-09-2		
4-Methyl-2-pentanone (MIBK)	ND	ug/l	50.	1.0	06/14/02 14:48	DLK	108-10-1		
Methyl-tert-butyl ether	ND	ug/l	5.0	1.0	06/14/02 14:48	DLK	1634-04-4		
Naphthalene	ND	ug/l	5.0	1.0	06/14/02 14:48	DLK	91-20-3		
n-Propylbenzene	ND	ug/l	5.0	1.0	06/14/02 14:48	DLK	103-65-1		
Styrene	ND	ug/l	5.0	1.0	06/14/02 14:48	DLK	100-42-5		
1,1,1,2-Tetrachloroethane	ND	ug/l	5.0	1.0	06/14/02 14:48	DLK	630-20-6		
1,1,2,2-Tetrachloroethane	ND	ug/l	5.0	1.0	06/14/02 14:48	DLK	79-34-5		
Tetrachloroethene	400	ug/l	50.	10.0	06/14/02 14:48	DLK	127-18-4		
Tetrahydrofuran	ND	ug/l	50.	1.0	06/14/02 14:48	DLK	109-99-9		
Toluene	ND	ug/l	5.0	1.0	06/14/02 14:48	DLK	108-88-3		
1,2,3-Trichlorobenzene	ND	ug/l	5.0	1.0	06/14/02 14:48	DLK	87-61-6		
1,2,4-Trichlorobenzene	ND	ug/l	5.0	1.0	06/14/02 14:48	DLK	120-82-1		
1,1,1-Trichloroethane	ND	ug/l	5.0	1.0	06/14/02 14:48	DLK	71-55-6		
1,1,2-Trichloroethane	ND	ug/l	5.0	1.0	06/14/02 14:48	DLK	79-00-5		
Trichloroethene	770	ug/l	50.	10.0	06/14/02 14:48	DLK	79-01-6		
Trichlorofluoromethane	ND	ug/l	10.	1.0	06/14/02 14:48	DLK	75-69-4		
1,2,3-Trichloropropane	ND	ug/l	5.0	1.0	06/14/02 14:48	DLK	96-18-4		
1,2,4-Trimethylbenzene	ND	ug/l	5.0	1.0	06/14/02 14:48	DLK	95-63-6		
1,3,5-Trimethylbenzene	ND	ug/l	5.0	1.0	06/14/02 14:48	DLK	108-67-8		
Vinyl chloride	ND	ug/l	10.	1.0	06/14/02 14:48	DLK	75-01-4		
m&p-Xylene	ND	ug/l	10.	1.0	06/14/02 14:48	DLK			
o-Xylene	ND	ug/l	5.0	1.0	06/14/02 14:48	DLK	95-47-6		
Toluene-d8 (S)	93	%		1.0	06/14/02 14:48	DLK	2037-26-5		
4-Bromofluorobenzene (S)	100	%		1.0	06/14/02 14:48	DLK	460-00-4		
Dibromofluoromethane (S)	95	%		1.0	06/14/02 14:48	DLK			
1,2-Dichloroethane-d4 (S)	85	%		1.0	06/14/02 14:48	DLK	17060-07-0		

Laboratory Certification IDs
NC Wastewater 12
NC Drinking Water 37706
SC 99006

REPORT OF LABORATORY ANALYSIS
This report shall not be reproduced, except in full,
without the written consent of Pace Analytical Services, Inc.

Laboratory Certification IDs
LA Wastewater 04034
VA Drinking Water 213
FL NELAP E87627

Pace Analytical™
www.pacelabs.com

Pace Analytical Services, Inc.
9800 Kincey Avenue, Suite 100
Huntersville, NC 28078
Phone: 704.875.9092
Fax: 704.875.9091

Lab Project Number: 9233669
Client Project ID: Former Worth/NC101047.0002

Lab Sample No: 922322474 Project Sample Number: 9233669-007 Date Collected: 06/12/02 11:35
Client Sample ID: MW-7 Matrix: Water Date Received: 06/13/02 10:40

Parameters	Results	Units	Report Limit	DF	Analyzed	By	CAS No.	Qual	RegLmt
Metals									
Trace ICP Metals	Prep/Method: / EPA 200.7								
Iron	0.18	mg/l	0.050	1.0	06/21/02 03:55	DJR	7439-89-6		
Manganese	0.56	mg/l	0.0050	1.0	06/21/02 03:55	DJR	7439-96-5		
Date Digested					06/19/02				
Wet Chemistry									
Ion Chromatography	Method: EPA 300.0								
Chloride	60.	mg/l	1.0	1.0	06/13/02	CDE	16887-00-6		
Nitrate	2.3	mg/l	0.10	1.0	06/13/02	CDE			
Nitrite	ND	mg/l	0.10	1.0	06/13/02	CDE			
Sulfate	29.	mg/l	1.0	1.0	06/13/02	CDE			
Alkalinity, Total	Method: EPA 310.1								
Alkalinity, Total	130	mg/l	1.0	1.0	06/14/02	HEH			
Ammonia	Method: EPA 350.1								
Nitrogen, Ammonia	ND	mg/l	0.10	1.0	06/13/02	BYH	7727-37-9		
Sulfide, Total	Method: EPA 376.2								
Sulfide	ND	mg/l	0.050	1.0	06/14/02	HEH			
Biochemical Oxygen Demand, 5 d	Prep/Method: / EPA 405.1								
BOD, 5 day	ND	mg/l	2.0	1.0	06/18/02	JBK			
Date Prepared					06/13/02				
Chemical Oxygen Demand	Method: EPA 410.4								
Chemical Oxygen Demand	ND	mg/l	25.	1.0	06/14/02	HEH			
GC/MS Volatiles									
GC/MS VOCs by 8260	Method: EPA 8260								
Acetone	ND	ug/l	5000	50.0	06/25/02 00:19	DLK	67-64-1		
Benzene	ND	ug/l	250	50.0	06/25/02 00:19	DLK	71-43-2		
Bromobenzene	ND	ug/l	250	50.0	06/25/02 00:19	DLK	108-86-1		
Bromochloromethane	ND	ug/l	250	50.0	06/25/02 00:19	DLK	74-97-5		
Bromodichloromethane	ND	ug/l	250	50.0	06/25/02 00:19	DLK	75-27-4		
Bromoform	ND	ug/l	250	50.0	06/25/02 00:19	DLK	75-25-2		
Bromomethane	ND	ug/l	500	50.0	06/25/02 00:19	DLK	74-83-9		
2-Butanone (MEK)	ND	ug/l	5000	50.0	06/25/02 00:19	DLK	78-93-3		

Laboratory Certification IDs
NC Wastewater 12
NC Drinking Water 37706
SC 99006

REPORT OF LABORATORY ANALYSIS
This report shall not be reproduced, except in full,
without the written consent of Pace Analytical Services, Inc.

Laboratory Certification IDs
LA Wastewater 04034
VA Drinking Water 213
FL NELAP E87627

Pace Analytical™
www.pacelabs.com

Pace Analytical Services, Inc.
9800 Kincey Avenue, Suite 100
Huntersville, NC 28078
Phone: 704.875.9092
Fax: 704.875.9091

Lab Project Number: 9233669
Client Project ID: Former Worth/NC101047.0002

Lab Sample No: 922322474 Project Sample Number: 9233669-007 Date Collected: 06/12/02 11:35
Client Sample ID: MW-7 Matrix: Water Date Received: 06/13/02 10:40

Parameters	Results	Units	Report Limit	DF	Analyzed	By	CAS No.	Qual	RegLmt
n-Butylbenzene	ND	ug/l	250	50.0	06/25/02 00:19	DLK	104-51-8		
sec-Butylbenzene	ND	ug/l	250	50.0	06/25/02 00:19	DLK	135-98-8		
tert-Butylbenzene	ND	ug/l	250	50.0	06/25/02 00:19	DLK	98-06-6		
Carbon disulfide	ND	ug/l	500	50.0	06/25/02 00:19	DLK	75-15-0		
Carbon tetrachloride	ND	ug/l	250	50.0	06/25/02 00:19	DLK	56-23-5		
Chlorobenzene	ND	ug/l	250	50.0	06/25/02 00:19	DLK	108-90-7		
Chloroethane	ND	ug/l	500	50.0	06/25/02 00:19	DLK	75-00-3		
Chloroform	350	ug/l	250	50.0	06/25/02 00:19	DLK	67-66-3		
Chloromethane	ND	ug/l	500	50.0	06/25/02 00:19	DLK	74-87-3		
2-Chlorotoluene	ND	ug/l	250	50.0	06/25/02 00:19	DLK	95-49-8		
4-Chlorotoluene	ND	ug/l	250	50.0	06/25/02 00:19	DLK	106-43-4		
1,2-Dibromo-3-chloropropane	ND	ug/l	250	50.0	06/25/02 00:19	DLK	96-12-8		
Dibromochloromethane	ND	ug/l	250	50.0	06/25/02 00:19	DLK	124-48-1		
1,2-Dibromoethane (EDB)	ND	ug/l	250	50.0	06/25/02 00:19	DLK	106-93-4		
Dibromomethane	ND	ug/l	250	50.0	06/25/02 00:19	DLK	74-95-3		
1,2-Dichlorobenzene	ND	ug/l	250	50.0	06/25/02 00:19	DLK	95-50-1		
1,3-Dichlorobenzene	ND	ug/l	250	50.0	06/25/02 00:19	DLK	541-73-1		
1,4-Dichlorobenzene	ND	ug/l	250	50.0	06/25/02 00:19	DLK	106-46-7		
Dichlorodifluoromethane	ND	ug/l	500	50.0	06/25/02 00:19	DLK	75-71-8		
1,1-Dichloroethane	ND	ug/l	250	50.0	06/25/02 00:19	DLK	75-34-3		
1,2-Dichloroethane	ND	ug/l	250	50.0	06/25/02 00:19	DLK	107-06-2		
1,1-Dichloroethene	260	ug/l	250	50.0	06/25/02 00:19	DLK	75-35-4		
cis-1,2-Dichloroethene	2100	ug/l	250	50.0	06/25/02 00:19	DLK	156-59-2		
trans-1,2-Dichloroethene	ND	ug/l	250	50.0	06/25/02 00:19	DLK	156-60-5		
1,2-Dichloropropane	ND	ug/l	250	50.0	06/25/02 00:19	DLK	78-87-5		
1,3-Dichloropropane	ND	ug/l	250	50.0	06/25/02 00:19	DLK	142-28-9		
2,2-Dichloropropane	ND	ug/l	250	50.0	06/25/02 00:19	DLK	594-20-7		
1,1-Dichloropropene	ND	ug/l	250	50.0	06/25/02 00:19	DLK	563-58-6		
Diisopropyl ether	ND	ug/l	250	50.0	06/25/02 00:19	DLK	108-20-3		
Ethylbenzene	ND	ug/l	250	50.0	06/25/02 00:19	DLK	100-41-4		
Hexachloro-1,3-butadiene	ND	ug/l	250	50.0	06/25/02 00:19	DLK	87-68-3		
Isopropylbenzene (Cumene)	ND	ug/l	250	50.0	06/25/02 00:19	DLK	98-82-8		
p-Isopropyltoluene	ND	ug/l	250	50.0	06/25/02 00:19	DLK	99-87-6		
Methylene chloride	ND	ug/l	250	50.0	06/25/02 00:19	DLK	75-09-2		
4-Methyl-2-pentanone (MIBK)	ND	ug/l	2500	50.0	06/25/02 00:19	DLK	108-10-1		
Methyl-tert-butyl ether	ND	ug/l	250	50.0	06/25/02 00:19	DLK	1634-04-4		
Naphthalene	ND	ug/l	250	50.0	06/25/02 00:19	DLK	91-20-3		
n-Propylbenzene	ND	ug/l	250	50.0	06/25/02 00:19	DLK	103-65-1		
Styrene	ND	ug/l	250	50.0	06/25/02 00:19	DLK	100-42-5		

Laboratory Certification IDs
NC Wastewater 12
NC Drinking Water 37706
SC 99006

REPORT OF LABORATORY ANALYSIS
This report shall not be reproduced, except in full,
without the written consent of Pace Analytical Services, Inc.

Laboratory Certification IDs
LA Wastewater 04034
VA Drinking Water 213
FL NELAP E87627

Pace Analytical™
www.pacelabs.com

Pace Analytical Services, Inc.
9800 Kincey Avenue, Suite 100
Huntersville, NC 28078
Phone: 704.875.9092
Fax: 704.875.9091

Lab Project Number: 9233669
Client Project ID: Former Worth/NC101047.0002

Lab Sample No: 922322474 Project Sample Number: 9233669-007 Date Collected: 06/12/02 11:35
Client Sample ID: MW-7 Matrix: Water Date Received: 06/13/02 10:40

Parameters	Results	Units	Report Limit	DF	Analyzed	By	CAS No.	Qual	RegLmt
1,1,1,2-Tetrachloroethane	ND	ug/l	250	50.0	06/25/02 00:19	DLK	630-20-6		
1,1,2,2-Tetrachloroethane	ND	ug/l	250	50.0	06/25/02 00:19	DLK	79-34-5		
Tetrachloroethene	9400	ug/l	250	50.0	06/25/02 00:19	DLK	127-18-4		
Tetrahydrofuran	ND	ug/l	2500	50.0	06/25/02 00:19	DLK	109-99-9		
Toluene	ND	ug/l	250	50.0	06/25/02 00:19	DLK	108-88-3		
1,2,3-Trichlorobenzene	ND	ug/l	250	50.0	06/25/02 00:19	DLK	87-61-6		
1,2,4-Trichlorobenzene	ND	ug/l	250	50.0	06/25/02 00:19	DLK	120-82-1		
1,1,1-Trichloroethane	ND	ug/l	250	50.0	06/25/02 00:19	DLK	71-55-6		
1,1,2-Trichloroethane	ND	ug/l	250	50.0	06/25/02 00:19	DLK	79-00-5		
Trichloroethene	2100	ug/l	250	50.0	06/25/02 00:19	DLK	79-01-6		
Trichlorofluoromethane	ND	ug/l	500	50.0	06/25/02 00:19	DLK	75-69-4		
1,2,3-Trichloropropane	ND	ug/l	250	50.0	06/25/02 00:19	DLK	96-18-4		
1,2,4-Trimethylbenzene	ND	ug/l	250	50.0	06/25/02 00:19	DLK	95-63-6		
1,3,5-Trimethylbenzene	ND	ug/l	250	50.0	06/25/02 00:19	DLK	108-67-8		
Vinyl chloride	ND	ug/l	500	50.0	06/25/02 00:19	DLK	75-01-4		
m&p-Xylene	ND	ug/l	500	50.0	06/25/02 00:19	DLK			
o-Xylene	ND	ug/l	250	50.0	06/25/02 00:19	DLK	95-47-6		
Toluene-d8 (S)	116	%		1.0	06/25/02 00:19	DLK	2037-26-5	2	
4-Bromofluorobenzene (S)	89	%		1.0	06/25/02 00:19	DLK	460-00-4		
Dibromofluoromethane (S)	86	%		1.0	06/25/02 00:19	DLK			
1,2-Dichloroethane-d4 (S)	81	%		1.0	06/25/02 00:19	DLK	17060-07-0		

Laboratory Certification IDs
NC Wastewater 12
NC Drinking Water 37706
SC 99006

REPORT OF LABORATORY ANALYSIS
This report shall not be reproduced, except in full,
without the written consent of Pace Analytical Services, Inc.

Laboratory Certification IDs
LA Wastewater 04034
VA Drinking Water 213
FL NELAP E87627

Pace Analytical™
www.pacelabs.com

Pace Analytical Services, Inc.
9800 Kincey Avenue, Suite 100
Huntersville, NC 28078
Phone: 704.875.9092
Fax: 704.875.9091

Lab Project Number: 9233669
Client Project ID: Former Worth/NC101047.0002

Lab Sample No: 922322482 Project Sample Number: 9233669-008 Date Collected: 06/12/02 12:40
Client Sample ID: MW-8D Matrix: Water Date Received: 06/13/02 10:40

Parameters	Results	Units	Report Limit	DF	Analyzed	By	CAS No.	Qual	RegLmt
GC/MS Volatiles									
GC/MS VOCs by 8260	Method: EPA 8260								
Acetone	ND	ug/l	100	1.0	06/14/02 00:33	DLK	67-64-1		
Benzene	ND	ug/l	5.0	1.0	06/14/02 00:33	DLK	71-43-2		
Bromobenzene	ND	ug/l	5.0	1.0	06/14/02 00:33	DLK	108-86-1		
Bromochloromethane	ND	ug/l	5.0	1.0	06/14/02 00:33	DLK	74-97-5		
Bromodichloromethane	ND	ug/l	5.0	1.0	06/14/02 00:33	DLK	75-27-4		
Bromoform	ND	ug/l	5.0	1.0	06/14/02 00:33	DLK	75-25-2		
Bromomethane	ND	ug/l	10.	1.0	06/14/02 00:33	DLK	74-83-9		
2-Butanone (MEK)	ND	ug/l	100	1.0	06/14/02 00:33	DLK	78-93-3		
n-Butylbenzene	ND	ug/l	5.0	1.0	06/14/02 00:33	DLK	104-51-8		
sec-Butylbenzene	ND	ug/l	5.0	1.0	06/14/02 00:33	DLK	135-98-8		
tert-Butylbenzene	ND	ug/l	5.0	1.0	06/14/02 00:33	DLK	98-06-6		
Carbon disulfide	ND	ug/l	10.	1.0	06/14/02 00:33	DLK	75-15-0		
Carbon tetrachloride	ND	ug/l	5.0	1.0	06/14/02 00:33	DLK	56-23-5		
Chlorobenzene	ND	ug/l	5.0	1.0	06/14/02 00:33	DLK	108-90-7		
Chloroethane	ND	ug/l	10.	1.0	06/14/02 00:33	DLK	75-00-3		
Chloroform	ND	ug/l	5.0	1.0	06/14/02 00:33	DLK	67-66-3		
Chloromethane	ND	ug/l	10.	1.0	06/14/02 00:33	DLK	74-87-3		
2-Chlorotoluene	ND	ug/l	5.0	1.0	06/14/02 00:33	DLK	95-49-8		
4-Chlorotoluene	ND	ug/l	5.0	1.0	06/14/02 00:33	DLK	106-43-4		
1,2-Dibromo-3-chloropropane	ND	ug/l	5.0	1.0	06/14/02 00:33	DLK	96-12-8		
Dibromochloromethane	ND	ug/l	5.0	1.0	06/14/02 00:33	DLK	124-48-1		
1,2-Dibromoethane (EDB)	ND	ug/l	5.0	1.0	06/14/02 00:33	DLK	106-93-4		
Dibromomethane	ND	ug/l	5.0	1.0	06/14/02 00:33	DLK	74-95-3		
1,2-Dichlorobenzene	ND	ug/l	5.0	1.0	06/14/02 00:33	DLK	95-50-1		
1,3-Dichlorobenzene	ND	ug/l	5.0	1.0	06/14/02 00:33	DLK	541-73-1		
1,4-Dichlorobenzene	ND	ug/l	5.0	1.0	06/14/02 00:33	DLK	106-46-7		
Dichlorodifluoromethane	ND	ug/l	10.	1.0	06/14/02 00:33	DLK	75-71-8		
1,1-Dichloroethane	ND	ug/l	5.0	1.0	06/14/02 00:33	DLK	75-34-3		
1,2-Dichloroethane	ND	ug/l	5.0	1.0	06/14/02 00:33	DLK	107-06-2		
1,1-Dichloroethene	ND	ug/l	5.0	1.0	06/14/02 00:33	DLK	75-35-4		
cis-1,2-Dichloroethene	ND	ug/l	5.0	1.0	06/14/02 00:33	DLK	156-59-2		
trans-1,2-Dichloroethene	ND	ug/l	5.0	1.0	06/14/02 00:33	DLK	156-60-5		
1,2-Dichloropropane	ND	ug/l	5.0	1.0	06/14/02 00:33	DLK	78-87-5		
1,3-Dichloropropane	ND	ug/l	5.0	1.0	06/14/02 00:33	DLK	142-28-9		
2,2-Dichloropropane	ND	ug/l	5.0	1.0	06/14/02 00:33	DLK	594-20-7		
1,1-Dichloropropene	ND	ug/l	5.0	1.0	06/14/02 00:33	DLK	563-58-6		
Diisopropyl ether	ND	ug/l	5.0	1.0	06/14/02 00:33	DLK	108-20-3		

Laboratory Certification IDs
NC Wastewater 12
NC Drinking Water 37706
SC 99006

REPORT OF LABORATORY ANALYSIS
This report shall not be reproduced, except in full,
without the written consent of Pace Analytical Services, Inc.

Laboratory Certification IDs
LA Wastewater 04034
VA Drinking Water 213
FL NELAP E87627

Pace Analytical™
www.pacelabs.com

Pace Analytical Services, Inc.
9800 Kincey Avenue, Suite 100
Huntersville, NC 28078
Phone: 704.875.9092
Fax: 704.875.9091

Lab Project Number: 9233669
Client Project ID: Former Worth/NC101047.0002

Lab Sample No: 922322482 Project Sample Number: 9233669-008 Date Collected: 06/12/02 12:40
Client Sample ID: MW-8D Matrix: Water Date Received: 06/13/02 10:40

Parameters	Results	Units	Report Limit	DF	Analyzed	By	CAS No.	Qual	RegLmt
Ethylbenzene	ND	ug/l	5.0	1.0	06/14/02 00:33	DLK	100-41-4		
Hexachloro-1,3-butadiene	ND	ug/l	5.0	1.0	06/14/02 00:33	DLK	87-68-3		
Isopropylbenzene (Cumene)	ND	ug/l	5.0	1.0	06/14/02 00:33	DLK	98-82-8		
p-Isopropyltoluene	ND	ug/l	5.0	1.0	06/14/02 00:33	DLK	99-87-6		
Methylene chloride	ND	ug/l	5.0	1.0	06/14/02 00:33	DLK	75-09-2		
4-Methyl-2-pentanone (MIBK)	ND	ug/l	50.	1.0	06/14/02 00:33	DLK	108-10-1		
Methyl-tert-butyl ether	ND	ug/l	5.0	1.0	06/14/02 00:33	DLK	1634-04-4		
Naphthalene	ND	ug/l	5.0	1.0	06/14/02 00:33	DLK	91-20-3		
n-Propylbenzene	ND	ug/l	5.0	1.0	06/14/02 00:33	DLK	103-65-1		
Styrene	ND	ug/l	5.0	1.0	06/14/02 00:33	DLK	100-42-5		
1,1,1,2-Tetrachloroethane	ND	ug/l	5.0	1.0	06/14/02 00:33	DLK	630-20-6		
1,1,2,2-Tetrachloroethane	ND	ug/l	5.0	1.0	06/14/02 00:33	DLK	79-34-5		
Tetrachloroethene	ND	ug/l	5.0	1.0	06/14/02 00:33	DLK	127-18-4		
Tetrahydrofuran	ND	ug/l	50.	1.0	06/14/02 00:33	DLK	109-99-9		
Toluene	ND	ug/l	5.0	1.0	06/14/02 00:33	DLK	108-88-3		
1,2,3-Trichlorobenzene	ND	ug/l	5.0	1.0	06/14/02 00:33	DLK	87-61-6		
1,2,4-Trichlorobenzene	ND	ug/l	5.0	1.0	06/14/02 00:33	DLK	120-82-1		
1,1,1-Trichloroethane	ND	ug/l	5.0	1.0	06/14/02 00:33	DLK	71-55-6		
1,1,2-Trichloroethane	ND	ug/l	5.0	1.0	06/14/02 00:33	DLK	79-00-5		
Trichloroethene	ND	ug/l	5.0	1.0	06/14/02 00:33	DLK	79-01-6		
Trichlorofluoromethane	ND	ug/l	10.	1.0	06/14/02 00:33	DLK	75-69-4		
1,2,3-Trichloropropane	ND	ug/l	5.0	1.0	06/14/02 00:33	DLK	96-18-4		
1,2,4-Trimethylbenzene	ND	ug/l	5.0	1.0	06/14/02 00:33	DLK	95-63-6		
1,3,5-Trimethylbenzene	ND	ug/l	5.0	1.0	06/14/02 00:33	DLK	108-67-8		
Vinyl chloride	ND	ug/l	10.	1.0	06/14/02 00:33	DLK	75-01-4		
m&p-Xylene	ND	ug/l	10.	1.0	06/14/02 00:33	DLK			
o-Xylene	ND	ug/l	5.0	1.0	06/14/02 00:33	DLK	95-47-6		
Toluene-d8 (S)	86	%		1.0	06/14/02 00:33	DLK	2037-26-5		
4-Bromofluorobenzene (S)	95	%		1.0	06/14/02 00:33	DLK	460-00-4		
Dibromofluoromethane (S)	88	%		1.0	06/14/02 00:33	DLK			
1,2-Dichloroethane-d4 (S)	86	%		1.0	06/14/02 00:33	DLK	17060-07-0		

Laboratory Certification IDs
NC Wastewater 12
NC Drinking Water 37706
SC 99006

REPORT OF LABORATORY ANALYSIS
This report shall not be reproduced, except in full,
without the written consent of Pace Analytical Services, Inc.

Laboratory Certification IDs
LA Wastewater 04034
VA Drinking Water 213
FL NELAP E87627

Pace Analytical™
www.pacelabs.com

Pace Analytical Services, Inc.
9800 Kincey Avenue, Suite 100
Huntersville, NC 28078
Phone: 704.875.9092
Fax: 704.875.9091

Lab Project Number: 9233669
Client Project ID: Former Worth/NC101047.0002

Lab Sample No: 922322490 Project Sample Number: 9233669-009 Date Collected: 06/11/02 14:30
Client Sample ID: MW-9 Matrix: Water Date Received: 06/13/02 10:40

Parameters	Results	Units	Report Limit	DF	Analyzed	By	CAS No.	Qual	RegLmt
Metals									
Trace ICP Metals	Prep/Method: / EPA 200.7								
Iron	0.092	mg/l	0.050	1.0	06/21/02 03:12	DJR	7439-89-6		
Manganese	0.45	mg/l	0.0050	1.0	06/21/02 03:12	DJR	7439-96-5		
Date Digested					06/19/02				
Wet Chemistry									
Ion Chromatography	Method: EPA 300.0								
Chloride	23.	mg/l	1.0	1.0	06/13/02	CDE	16887-00-6		
Nitrate	ND	mg/l	0.10	1.0	06/13/02	CDE			
Nitrite	2.1	mg/l	0.10	1.0	06/13/02	CDE			
Sulfate	38.	mg/l	1.0	1.0	06/13/02	CDE			
Alkalinity, Total	Method: EPA 310.1								
Alkalinity, Total	260	mg/l	1.0	1.0	06/14/02	HEH			
Ammonia	Method: EPA 350.1								
Nitrogen, Ammonia	ND	mg/l	0.10	1.0	06/13/02	BYH	7727-37-9		
Sulfide, Total	Method: EPA 376.2								
Sulfide	ND	mg/l	0.050	1.0	06/14/02	HEH			
Biochemical Oxygen Demand, 5 d	Prep/Method: / EPA 405.1								
BOD, 5 day	ND	mg/l	2.0	1.0	06/18/02	JBK			
Date Prepared					06/13/02				
Chemical Oxygen Demand	Method: EPA 410.4								
Chemical Oxygen Demand	ND	mg/l	25.	1.0	06/14/02	HEH			
GC/MS Volatiles									
GC/MS VOCs by 8260	Method: EPA 8260								
Acetone	ND	ug/l	100	1.0	06/14/02 11:45	DLK	67-64-1		
Benzene	ND	ug/l	5.0	1.0	06/14/02 11:45	DLK	71-43-2		
Bromobenzene	ND	ug/l	5.0	1.0	06/14/02 11:45	DLK	108-86-1		
Bromochloromethane	ND	ug/l	5.0	1.0	06/14/02 11:45	DLK	74-97-5		
Bromodichloromethane	ND	ug/l	5.0	1.0	06/14/02 11:45	DLK	75-27-4		
Bromoform	ND	ug/l	5.0	1.0	06/14/02 11:45	DLK	75-25-2		
Bromomethane	ND	ug/l	10.	1.0	06/14/02 11:45	DLK	74-83-9		
2-Butanone (MEK)	ND	ug/l	100	1.0	06/14/02 11:45	DLK	78-93-3		

Laboratory Certification IDs
NC Wastewater 12
NC Drinking Water 37706
SC 99006

REPORT OF LABORATORY ANALYSIS
This report shall not be reproduced, except in full,
without the written consent of Pace Analytical Services, Inc.

Laboratory Certification IDs
LA Wastewater 04034
VA Drinking Water 213
FL NELAP E87627

Pace Analytical™
www.pacelabs.com

Pace Analytical Services, Inc.
9800 Kincey Avenue, Suite 100
Huntersville, NC 28078
Phone: 704.875.9092
Fax: 704.875.9091

Lab Project Number: 9233669
Client Project ID: Former Worth/NC101047.0002

Lab Sample No: 922322490 Project Sample Number: 9233669-009 Date Collected: 06/11/02 14:30
Client Sample ID: MW-9 Matrix: Water Date Received: 06/13/02 10:40

Parameters	Results	Units	Report Limit	DF	Analyzed	By	CAS No.	Qual	RegLmt
n-Butylbenzene	ND	ug/l	5.0	1.0	06/14/02 11:45	DLK	104-51-8		
sec-Butylbenzene	ND	ug/l	5.0	1.0	06/14/02 11:45	DLK	135-98-8		
tert-Butylbenzene	ND	ug/l	5.0	1.0	06/14/02 11:45	DLK	98-06-6		
Carbon disulfide	ND	ug/l	10.	1.0	06/14/02 11:45	DLK	75-15-0		
Carbon tetrachloride	ND	ug/l	5.0	1.0	06/14/02 11:45	DLK	56-23-5		
Chlorobenzene	ND	ug/l	5.0	1.0	06/14/02 11:45	DLK	108-90-7		
Chloroethane	ND	ug/l	10.	1.0	06/14/02 11:45	DLK	75-00-3		
Chloroform	7.0	ug/l	5.0	1.0	06/14/02 11:45	DLK	67-66-3		
Chloromethane	ND	ug/l	10.	1.0	06/14/02 11:45	DLK	74-87-3		
2-Chlorotoluene	ND	ug/l	5.0	1.0	06/14/02 11:45	DLK	95-49-8		
4-Chlorotoluene	ND	ug/l	5.0	1.0	06/14/02 11:45	DLK	106-43-4		
1,2-Dibromo-3-chloropropane	ND	ug/l	5.0	1.0	06/14/02 11:45	DLK	96-12-8		
Dibromochloromethane	ND	ug/l	5.0	1.0	06/14/02 11:45	DLK	124-48-1		
1,2-Dibromoethane (EDB)	ND	ug/l	5.0	1.0	06/14/02 11:45	DLK	106-93-4		
Dibromomethane	ND	ug/l	5.0	1.0	06/14/02 11:45	DLK	74-95-3		
1,2-Dichlorobenzene	ND	ug/l	5.0	1.0	06/14/02 11:45	DLK	95-50-1		
1,3-Dichlorobenzene	ND	ug/l	5.0	1.0	06/14/02 11:45	DLK	541-73-1		
1,4-Dichlorobenzene	ND	ug/l	5.0	1.0	06/14/02 11:45	DLK	106-46-7		
Dichlorodifluoromethane	ND	ug/l	10.	1.0	06/14/02 11:45	DLK	75-71-8		
1,1-Dichloroethane	ND	ug/l	5.0	1.0	06/14/02 11:45	DLK	75-34-3		
1,2-Dichloroethane	7.7	ug/l	5.0	1.0	06/14/02 11:45	DLK	107-06-2		
1,1-Dichloroethene	ND	ug/l	5.0	1.0	06/14/02 11:45	DLK	75-35-4		
cis-1,2-Dichloroethene	83.	ug/l	5.0	1.0	06/14/02 11:45	DLK	156-59-2		
trans-1,2-Dichloroethene	ND	ug/l	5.0	1.0	06/14/02 11:45	DLK	156-60-5		
1,2-Dichloropropane	ND	ug/l	5.0	1.0	06/14/02 11:45	DLK	78-87-5		
1,3-Dichloropropane	ND	ug/l	5.0	1.0	06/14/02 11:45	DLK	142-28-9		
2,2-Dichloropropane	ND	ug/l	5.0	1.0	06/14/02 11:45	DLK	594-20-7		
1,1-Dichloropropene	ND	ug/l	5.0	1.0	06/14/02 11:45	DLK	563-58-6		
Diisopropyl ether	ND	ug/l	5.0	1.0	06/14/02 11:45	DLK	108-20-3		
Ethylbenzene	ND	ug/l	5.0	1.0	06/14/02 11:45	DLK	100-41-4		
Hexachloro-1,3-butadiene	ND	ug/l	5.0	1.0	06/14/02 11:45	DLK	87-68-3		
Isopropylbenzene (Cumene)	ND	ug/l	5.0	1.0	06/14/02 11:45	DLK	98-82-8		
p-Isopropyltoluene	ND	ug/l	5.0	1.0	06/14/02 11:45	DLK	99-87-6		
Methylene chloride	ND	ug/l	5.0	1.0	06/14/02 11:45	DLK	75-09-2		
4-Methyl-2-pentanone (MIBK)	ND	ug/l	50.	1.0	06/14/02 11:45	DLK	108-10-1		
Methyl-tert-butyl ether	ND	ug/l	5.0	1.0	06/14/02 11:45	DLK	1634-04-4		
Naphthalene	ND	ug/l	5.0	1.0	06/14/02 11:45	DLK	91-20-3		
n-Propylbenzene	ND	ug/l	5.0	1.0	06/14/02 11:45	DLK	103-65-1		
Styrene	ND	ug/l	5.0	1.0	06/14/02 11:45	DLK	100-42-5		

Laboratory Certification IDs
NC Wastewater 12
NC Drinking Water 37706
SC 99006

REPORT OF LABORATORY ANALYSIS

This report shall not be reproduced, except in full,
without the written consent of Pace Analytical Services, Inc.

Laboratory Certification IDs
LA Wastewater 04034
VA Drinking Water 213
FL NELAP E87627

Pace Analytical™
www.pacelabs.com

Pace Analytical Services, Inc.
9800 Kincey Avenue, Suite 100
Huntersville, NC 28078
Phone: 704.875.9092
Fax: 704.875.9091

Lab Project Number: 9233669
Client Project ID: Former Worth/NC101047.0002

Lab Sample No: 922322490 Project Sample Number: 9233669-009 Date Collected: 06/11/02 14:30
Client Sample ID: MW-9 Matrix: Water Date Received: 06/13/02 10:40

Parameters	Results	Units	Report Limit	DF	Analyzed	By	CAS No.	Qual	RegLmt
1,1,1,2-Tetrachloroethane	ND	ug/l	5.0	1.0	06/14/02 11:45	DLK	630-20-6		
1,1,2,2-Tetrachloroethane	ND	ug/l	5.0	1.0	06/14/02 11:45	DLK	79-34-5		
Tetrachloroethene	48.	ug/l	5.0	1.0	06/14/02 11:45	DLK	127-18-4		
Tetrahydrofuran	ND	ug/l	50.	1.0	06/14/02 11:45	DLK	109-99-9		
Toluene	ND	ug/l	5.0	1.0	06/14/02 11:45	DLK	108-88-3		
1,2,3-Trichlorobenzene	ND	ug/l	5.0	1.0	06/14/02 11:45	DLK	87-61-6		
1,2,4-Trichlorobenzene	ND	ug/l	5.0	1.0	06/14/02 11:45	DLK	120-82-1		
1,1,1-Trichloroethane	ND	ug/l	5.0	1.0	06/14/02 11:45	DLK	71-55-6		
1,1,2-Trichloroethane	ND	ug/l	5.0	1.0	06/14/02 11:45	DLK	79-00-5		
Trichloroethene	1000	ug/l	100	20.0	06/14/02 11:45	DLK	79-01-6		
Trichlorofluoromethane	ND	ug/l	10.	1.0	06/14/02 11:45	DLK	75-69-4		
1,2,3-Trichloropropane	ND	ug/l	5.0	1.0	06/14/02 11:45	DLK	96-18-4		
1,2,4-Trimethylbenzene	ND	ug/l	5.0	1.0	06/14/02 11:45	DLK	95-63-6		
1,3,5-Trimethylbenzene	ND	ug/l	5.0	1.0	06/14/02 11:45	DLK	108-67-8		
Vinyl chloride	ND	ug/l	10.	1.0	06/14/02 11:45	DLK	75-01-4		
m&p-Xylene	ND	ug/l	10.	1.0	06/14/02 11:45	DLK			
o-Xylene	ND	ug/l	5.0	1.0	06/14/02 11:45	DLK	95-47-6		
Toluene-d8 (S)	98	%		1.0	06/14/02 11:45	DLK	2037-26-5		
4-Bromofluorobenzene (S)	99	%		1.0	06/14/02 11:45	DLK	460-00-4		
Dibromofluoromethane (S)	92	%		1.0	06/14/02 11:45	DLK			
1,2-Dichloroethane-d4 (S)	87	%		1.0	06/14/02 11:45	DLK	17060-07-0		

Laboratory Certification IDs
NC Wastewater 12
NC Drinking Water 37706
SC 99006

REPORT OF LABORATORY ANALYSIS
This report shall not be reproduced, except in full,
without the written consent of Pace Analytical Services, Inc.

Laboratory Certification IDs
LA Wastewater 04034
VA Drinking Water 213
FL NELAP E87627

Pace Analytical™
www.pacelabs.com

Pace Analytical Services, Inc.
9800 Kincey Avenue, Suite 100
Huntersville, NC 28078
Phone: 704.875.9092
Fax: 704.875.9091

Lab Project Number: 9233669
Client Project ID: Former Worth/NC101047.0002

Lab Sample No: 922322508 Project Sample Number: 9233669-010 Date Collected: 06/11/02 13:20
Client Sample ID: MW-10 Matrix: Water Date Received: 06/13/02 10:40

Parameters	Results	Units	Report Limit	DF	Analyzed	By	CAS No.	Qual	RegLmt
Metals									
Trace ICP Metals	Prep/Method: / EPA 200.7								
Iron	0.072	mg/l	0.050	1.0	06/21/02 03:17	DJR	7439-89-6		
Manganese	0.077	mg/l	0.0050	1.0	06/21/02 03:17	DJR	7439-96-5		
Date Digested					06/19/02				
Wet Chemistry									
Ion Chromatography	Method: EPA 300.0								
Chloride	51.	mg/l	1.0	1.0	06/13/02	CDE	16887-00-6		
Nitrate	0.13	mg/l	0.10	1.0	06/13/02	CDE			
Nitrite	ND	mg/l	0.10	1.0	06/13/02	CDE			
Sulfate	30.	mg/l	1.0	1.0	06/13/02	CDE			
Alkalinity, Total	Method: EPA 310.1								
Alkalinity, Total	350	mg/l	1.0	1.0	06/14/02	HEH			
Ammonia	Method: EPA 350.1								
Nitrogen, Ammonia	ND	mg/l	0.10	1.0	06/13/02	BYH	7727-37-9		
Sulfide, Total	Method: EPA 376.2								
Sulfide	ND	mg/l	0.050	1.0	06/14/02	HEH			
Biochemical Oxygen Demand, 5 d	Prep/Method: / EPA 405.1								
BOD, 5 day	ND	mg/l	2.0	1.0	06/18/02	JBK			
Date Prepared					06/13/02				
Chemical Oxygen Demand	Method: EPA 410.4								
Chemical Oxygen Demand	ND	mg/l	25.	1.0	06/14/02	HEH			
GC/MS Volatiles									
GC/MS VOCs by 8260	Method: EPA 8260								
Acetone	ND	ug/l	100	1.0	06/14/02 12:16	DLK	67-64-1		
Benzene	ND	ug/l	5.0	1.0	06/14/02 12:16	DLK	71-43-2		
Bromobenzene	ND	ug/l	5.0	1.0	06/14/02 12:16	DLK	108-86-1		
Bromochloromethane	ND	ug/l	5.0	1.0	06/14/02 12:16	DLK	74-97-5		
Bromodichloromethane	ND	ug/l	5.0	1.0	06/14/02 12:16	DLK	75-27-4		
Bromoform	ND	ug/l	5.0	1.0	06/14/02 12:16	DLK	75-25-2		
Bromomethane	ND	ug/l	10.	1.0	06/14/02 12:16	DLK	74-83-9		
2-Butanone (MEK)	ND	ug/l	100	1.0	06/14/02 12:16	DLK	78-93-3		

Laboratory Certification IDs
NC Wastewater 12
NC Drinking Water 37706
SC 99006

REPORT OF LABORATORY ANALYSIS
This report shall not be reproduced, except in full,
without the written consent of Pace Analytical Services, Inc.

Laboratory Certification IDs
LA Wastewater 04034
VA Drinking Water 213
FL NELAP E87627

Pace Analytical™
www.pacelabs.com

Pace Analytical Services, Inc.
9800 Kincey Avenue, Suite 100
Huntersville, NC 28078
Phone: 704.875.9092
Fax: 704.875.9091

Lab Project Number: 9233669
Client Project ID: Former Worth/NC101047.0002

Lab Sample No: 922322508 Project Sample Number: 9233669-010 Date Collected: 06/11/02 13:20
Client Sample ID: MW-10 Matrix: Water Date Received: 06/13/02 10:40

Parameters	Results	Units	Report Limit	DF	Analyzed	By	CAS No.	Qual	RegLmt
n-Butylbenzene	ND	ug/l	5.0	1.0	06/14/02 12:16	DLK	104-51-8		
sec-Butylbenzene	ND	ug/l	5.0	1.0	06/14/02 12:16	DLK	135-98-8		
tert-Butylbenzene	ND	ug/l	5.0	1.0	06/14/02 12:16	DLK	98-06-6		
Carbon disulfide	ND	ug/l	10.	1.0	06/14/02 12:16	DLK	75-15-0		
Carbon tetrachloride	47.	ug/l	5.0	1.0	06/14/02 12:16	DLK	56-23-5		
Chlorobenzene	ND	ug/l	5.0	1.0	06/14/02 12:16	DLK	108-90-7		
Chloroethane	ND	ug/l	10.	1.0	06/14/02 12:16	DLK	75-00-3		
Chloroform	340	ug/l	100	20.0	06/14/02 12:16	DLK	67-66-3		
Chloromethane	ND	ug/l	10.	1.0	06/14/02 12:16	DLK	74-87-3		
2-Chlorotoluene	ND	ug/l	5.0	1.0	06/14/02 12:16	DLK	95-49-8		
4-Chlorotoluene	ND	ug/l	5.0	1.0	06/14/02 12:16	DLK	106-43-4		
1,2-Dibromo-3-chloropropane	ND	ug/l	5.0	1.0	06/14/02 12:16	DLK	96-12-8		
Dibromochloromethane	ND	ug/l	5.0	1.0	06/14/02 12:16	DLK	124-48-1		
1,2-Dibromoethane (EDB)	ND	ug/l	5.0	1.0	06/14/02 12:16	DLK	106-93-4		
Dibromomethane	ND	ug/l	5.0	1.0	06/14/02 12:16	DLK	74-95-3		
1,2-Dichlorobenzene	ND	ug/l	5.0	1.0	06/14/02 12:16	DLK	95-50-1		
1,3-Dichlorobenzene	ND	ug/l	5.0	1.0	06/14/02 12:16	DLK	541-73-1		
1,4-Dichlorobenzene	ND	ug/l	5.0	1.0	06/14/02 12:16	DLK	106-46-7		
Dichlorodifluoromethane	ND	ug/l	10.	1.0	06/14/02 12:16	DLK	75-71-8		
1,1-Dichloroethane	15.	ug/l	5.0	1.0	06/14/02 12:16	DLK	75-34-3		
1,2-Dichloroethane	ND	ug/l	5.0	1.0	06/14/02 12:16	DLK	107-06-2		
1,1-Dichloroethene	540	ug/l	100	20.0	06/14/02 12:16	DLK	75-35-4		
cis-1,2-Dichloroethene	2100	ug/l	250	50.0	06/14/02 12:16	DLK	156-59-2		
trans-1,2-Dichloroethene	ND	ug/l	5.0	1.0	06/14/02 12:16	DLK	156-60-5		
1,2-Dichloropropane	ND	ug/l	5.0	1.0	06/14/02 12:16	DLK	78-87-5		
1,3-Dichloropropane	ND	ug/l	5.0	1.0	06/14/02 12:16	DLK	142-28-9		
2,2-Dichloropropane	ND	ug/l	5.0	1.0	06/14/02 12:16	DLK	594-20-7		
1,1-Dichloropropene	ND	ug/l	5.0	1.0	06/14/02 12:16	DLK	563-58-6		
Diisopropyl ether	ND	ug/l	5.0	1.0	06/14/02 12:16	DLK	108-20-3		
Ethylbenzene	ND	ug/l	5.0	1.0	06/14/02 12:16	DLK	100-41-4		
Hexachloro-1,3-butadiene	ND	ug/l	5.0	1.0	06/14/02 12:16	DLK	87-68-3		
Isopropylbenzene (Cumene)	ND	ug/l	5.0	1.0	06/14/02 12:16	DLK	98-82-8		
p-Isopropyltoluene	ND	ug/l	5.0	1.0	06/14/02 12:16	DLK	99-87-6		
Methylene chloride	ND	ug/l	5.0	1.0	06/14/02 12:16	DLK	75-09-2		
4-Methyl-2-pentanone (MIBK)	ND	ug/l	50.	1.0	06/14/02 12:16	DLK	108-10-1		
Methyl-tert-butyl ether	ND	ug/l	5.0	1.0	06/14/02 12:16	DLK	1634-04-4		
Naphthalene	ND	ug/l	5.0	1.0	06/14/02 12:16	DLK	91-20-3		
n-Propylbenzene	ND	ug/l	5.0	1.0	06/14/02 12:16	DLK	103-65-1		
Styrene	ND	ug/l	5.0	1.0	06/14/02 12:16	DLK	100-42-5		

Laboratory Certification IDs
NC Wastewater 12
NC Drinking Water 37706
SC 99006

REPORT OF LABORATORY ANALYSIS

This report shall not be reproduced, except in full,
without the written consent of Pace Analytical Services, Inc.

Laboratory Certification IDs
LA Wastewater 04034
VA Drinking Water 213
FL NELAP E87627

Pace Analytical™
www.pacelabs.com

Pace Analytical Services, Inc.
9800 Kincey Avenue, Suite 100
Huntersville, NC 28078
Phone: 704.875.9092
Fax: 704.875.9091

Lab Project Number: 9233669
Client Project ID: Former Worth/NC101047.0002

Lab Sample No: 922322508 Project Sample Number: 9233669-010 Date Collected: 06/11/02 13:20
Client Sample ID: MW-10 Matrix: Water Date Received: 06/13/02 10:40

Parameters	Results	Units	Report Limit	DF	Analyzed	By	CAS No.	Qual	RegLmt
1,1,1,2-Tetrachloroethane	ND	ug/l	5.0	1.0	06/14/02 12:16	DLK	630-20-6		
1,1,2,2-Tetrachloroethane	ND	ug/l	5.0	1.0	06/14/02 12:16	DLK	79-34-5		
Tetrachloroethene	800	ug/l	100	20.0	06/14/02 12:16	DLK	127-18-4		
Tetrahydrofuran	ND	ug/l	50.	1.0	06/14/02 12:16	DLK	109-99-9		
Toluene	ND	ug/l	5.0	1.0	06/14/02 12:16	DLK	108-88-3		
1,2,3-Trichlorobenzene	ND	ug/l	5.0	1.0	06/14/02 12:16	DLK	87-61-6		
1,2,4-Trichlorobenzene	ND	ug/l	5.0	1.0	06/14/02 12:16	DLK	120-82-1		
1,1,1-Trichloroethane	ND	ug/l	5.0	1.0	06/14/02 12:16	DLK	71-55-6		
1,1,2-Trichloroethane	6.9	ug/l	5.0	1.0	06/14/02 12:16	DLK	79-00-5		
Trichloroethene	1000	ug/l	100	20.0	06/14/02 12:16	DLK	79-01-6		
Trichlorofluoromethane	ND	ug/l	10.	1.0	06/14/02 12:16	DLK	75-69-4		
1,2,3-Trichloropropane	ND	ug/l	5.0	1.0	06/14/02 12:16	DLK	96-18-4		
1,2,4-Trimethylbenzene	ND	ug/l	5.0	1.0	06/14/02 12:16	DLK	95-63-6		
1,3,5-Trimethylbenzene	ND	ug/l	5.0	1.0	06/14/02 12:16	DLK	108-67-8		
Vinyl chloride	170	ug/l	10.	1.0	06/14/02 12:16	DLK	75-01-4		
m&p-Xylene	ND	ug/l	10.	1.0	06/14/02 12:16	DLK			
o-Xylene	ND	ug/l	5.0	1.0	06/14/02 12:16	DLK	95-47-6		
Toluene-d8 (S)	94	%		1.0	06/14/02 12:16	DLK	2037-26-5		
4-Bromofluorobenzene (S)	97	%		1.0	06/14/02 12:16	DLK	460-00-4		
Dibromofluoromethane (S)	110	%		1.0	06/14/02 12:16	DLK			
1,2-Dichloroethane-d4 (S)	100	%		1.0	06/14/02 12:16	DLK	17060-07-0		

Laboratory Certification IDs
NC Wastewater 12
NC Drinking Water 37706
SC 99006

REPORT OF LABORATORY ANALYSIS

This report shall not be reproduced, except in full,
without the written consent of Pace Analytical Services, Inc.

Laboratory Certification IDs
LA Wastewater 04034
VA Drinking Water 213
FL NELAP E87627

Pace Analytical™
www.pacelabs.com

Pace Analytical Services, Inc.
9800 Kincey Avenue, Suite 100
Huntersville, NC 28078
Phone: 704.875.9092
Fax: 704.875.9091

Lab Project Number: 9233669
Client Project ID: Former Worth/NC101047.0002

Lab Sample No: 922322573 Project Sample Number: 9233669-011 Date Collected: 06/11/02 16:10
Client Sample ID: MW-11 Matrix: Water Date Received: 06/13/02 10:40

Parameters	Results	Units	Report Limit	DF	Analyzed	By	CAS No.	Qual	RegLmt
GC/MS Volatiles									
GC/MS VOCs by 8260	Method: EPA 8260								
Acetone	ND	ug/l	100	1.0	06/15/02 00:46	DLK	67-64-1		
Benzene	ND	ug/l	5.0	1.0	06/15/02 00:46	DLK	71-43-2		
Bromobenzene	ND	ug/l	5.0	1.0	06/15/02 00:46	DLK	108-86-1		
Bromochloromethane	ND	ug/l	5.0	1.0	06/15/02 00:46	DLK	74-97-5		
Bromodichloromethane	ND	ug/l	5.0	1.0	06/15/02 00:46	DLK	75-27-4		
Bromoform	ND	ug/l	5.0	1.0	06/15/02 00:46	DLK	75-25-2		
Bromomethane	ND	ug/l	10.	1.0	06/15/02 00:46	DLK	74-83-9		
2-Butanone (MEK)	ND	ug/l	100	1.0	06/15/02 00:46	DLK	78-93-3		
n-Butylbenzene	ND	ug/l	5.0	1.0	06/15/02 00:46	DLK	104-51-8		
sec-Butylbenzene	ND	ug/l	5.0	1.0	06/15/02 00:46	DLK	135-98-8		
tert-Butylbenzene	ND	ug/l	5.0	1.0	06/15/02 00:46	DLK	98-06-6		
Carbon disulfide	ND	ug/l	10.	1.0	06/15/02 00:46	DLK	75-15-0		
Carbon tetrachloride	ND	ug/l	5.0	1.0	06/15/02 00:46	DLK	56-23-5		
Chlorobenzene	ND	ug/l	5.0	1.0	06/15/02 00:46	DLK	108-90-7		
Chloroethane	ND	ug/l	10.	1.0	06/15/02 00:46	DLK	75-00-3		
Chloroform	ND	ug/l	5.0	1.0	06/15/02 00:46	DLK	67-66-3		
Chloromethane	ND	ug/l	10.	1.0	06/15/02 00:46	DLK	74-87-3		
2-Chlorotoluene	ND	ug/l	5.0	1.0	06/15/02 00:46	DLK	95-49-8		
4-Chlorotoluene	ND	ug/l	5.0	1.0	06/15/02 00:46	DLK	106-43-4		
1,2-Dibromo-3-chloropropane	ND	ug/l	5.0	1.0	06/15/02 00:46	DLK	96-12-8		
Dibromochloromethane	ND	ug/l	5.0	1.0	06/15/02 00:46	DLK	124-48-1		
1,2-Dibromoethane (EDB)	ND	ug/l	5.0	1.0	06/15/02 00:46	DLK	106-93-4		
Dibromomethane	ND	ug/l	5.0	1.0	06/15/02 00:46	DLK	74-95-3		
1,2-Dichlorobenzene	ND	ug/l	5.0	1.0	06/15/02 00:46	DLK	95-50-1		
1,3-Dichlorobenzene	ND	ug/l	5.0	1.0	06/15/02 00:46	DLK	541-73-1		
1,4-Dichlorobenzene	ND	ug/l	5.0	1.0	06/15/02 00:46	DLK	106-46-7		
Dichlorodifluoromethane	ND	ug/l	10.	1.0	06/15/02 00:46	DLK	75-71-8		
1,1-Dichloroethane	ND	ug/l	5.0	1.0	06/15/02 00:46	DLK	75-34-3		
1,2-Dichloroethane	ND	ug/l	5.0	1.0	06/15/02 00:46	DLK	107-06-2		
1,1-Dichloroethene	8.2	ug/l	5.0	1.0	06/15/02 00:46	DLK	75-35-4		
cis-1,2-Dichloroethene	7.4	ug/l	5.0	1.0	06/15/02 00:46	DLK	156-59-2		
trans-1,2-Dichloroethene	ND	ug/l	5.0	1.0	06/15/02 00:46	DLK	156-60-5		
1,2-Dichloropropane	ND	ug/l	5.0	1.0	06/15/02 00:46	DLK	78-87-5		
1,3-Dichloropropane	ND	ug/l	5.0	1.0	06/15/02 00:46	DLK	142-28-9		
2,2-Dichloropropane	ND	ug/l	5.0	1.0	06/15/02 00:46	DLK	594-20-7		
1,1-Dichloropropene	ND	ug/l	5.0	1.0	06/15/02 00:46	DLK	563-58-6		
Diisopropyl ether	ND	ug/l	5.0	1.0	06/15/02 00:46	DLK	108-20-3		

Laboratory Certification IDs
NC Wastewater 12
NC Drinking Water 37706
SC 99006

REPORT OF LABORATORY ANALYSIS
This report shall not be reproduced, except in full,
without the written consent of Pace Analytical Services, Inc.

Laboratory Certification IDs
LA Wastewater 04034
VA Drinking Water 213
FL NELAP E87627

Pace Analytical™
www.pacelabs.com

Pace Analytical Services, Inc.
9800 Kincey Avenue, Suite 100
Huntersville, NC 28078
Phone: 704.875.9092
Fax: 704.875.9091

Lab Project Number: 9233669
Client Project ID: Former Worth/NC101047.0002

Lab Sample No: 922322573 Project Sample Number: 9233669-011 Date Collected: 06/11/02 16:10
Client Sample ID: MW-11 Matrix: Water Date Received: 06/13/02 10:40

Parameters	Results	Units	Report Limit	DF	Analyzed	By	CAS No.	Qual	RegLmt
Ethylbenzene	ND	ug/l	5.0	1.0	06/15/02 00:46	DLK	100-41-4		
Hexachloro-1,3-butadiene	ND	ug/l	5.0	1.0	06/15/02 00:46	DLK	87-68-3		
Isopropylbenzene (Cumene)	ND	ug/l	5.0	1.0	06/15/02 00:46	DLK	98-82-8		
p-Isopropyltoluene	ND	ug/l	5.0	1.0	06/15/02 00:46	DLK	99-87-6		
Methylene chloride	ND	ug/l	5.0	1.0	06/15/02 00:46	DLK	75-09-2		
4-Methyl-2-pentanone (MIBK)	ND	ug/l	50.	1.0	06/15/02 00:46	DLK	108-10-1		
Methyl-tert-butyl ether	ND	ug/l	5.0	1.0	06/15/02 00:46	DLK	1634-04-4		
Naphthalene	ND	ug/l	5.0	1.0	06/15/02 00:46	DLK	91-20-3		
n-Propylbenzene	ND	ug/l	5.0	1.0	06/15/02 00:46	DLK	103-65-1		
Styrene	ND	ug/l	5.0	1.0	06/15/02 00:46	DLK	100-42-5		
1,1,1,2-Tetrachloroethane	ND	ug/l	5.0	1.0	06/15/02 00:46	DLK	630-20-6		
1,1,2,2-Tetrachloroethane	ND	ug/l	5.0	1.0	06/15/02 00:46	DLK	79-34-5		
Tetrachloroethene	26.	ug/l	5.0	1.0	06/15/02 00:46	DLK	127-18-4		
Tetrahydrofuran	ND	ug/l	50.	1.0	06/15/02 00:46	DLK	109-99-9		
Toluene	ND	ug/l	5.0	1.0	06/15/02 00:46	DLK	108-88-3		
1,2,3-Trichlorobenzene	ND	ug/l	5.0	1.0	06/15/02 00:46	DLK	87-61-6		
1,2,4-Trichlorobenzene	ND	ug/l	5.0	1.0	06/15/02 00:46	DLK	120-82-1		
1,1,1-Trichloroethane	ND	ug/l	5.0	1.0	06/15/02 00:46	DLK	71-55-6		
1,1,2-Trichloroethane	ND	ug/l	5.0	1.0	06/15/02 00:46	DLK	79-00-5		
Trichloroethene	91.	ug/l	5.0	1.0	06/15/02 00:46	DLK	79-01-6		
Trichlorofluoromethane	ND	ug/l	10.	1.0	06/15/02 00:46	DLK	75-69-4		
1,2,3-Trichloropropane	ND	ug/l	5.0	1.0	06/15/02 00:46	DLK	96-18-4		
1,2,4-Trimethylbenzene	ND	ug/l	5.0	1.0	06/15/02 00:46	DLK	95-63-6		
1,3,5-Trimethylbenzene	ND	ug/l	5.0	1.0	06/15/02 00:46	DLK	108-67-8		
Vinyl chloride	ND	ug/l	10.	1.0	06/15/02 00:46	DLK	75-01-4		
m&p-Xylene	ND	ug/l	10.	1.0	06/15/02 00:46	DLK			
o-Xylene	ND	ug/l	5.0	1.0	06/15/02 00:46	DLK	95-47-6		
Toluene-d8 (S)	99	%		1.0	06/15/02 00:46	DLK	2037-26-5		
4-Bromofluorobenzene (S)	98	%		1.0	06/15/02 00:46	DLK	460-00-4		
Dibromofluoromethane (S)	88	%		1.0	06/15/02 00:46	DLK			
1,2-Dichloroethane-d4 (S)	84	%		1.0	06/15/02 00:46	DLK	17060-07-0		

Laboratory Certification IDs
NC Wastewater 12
NC Drinking Water 37706
SC 99006

REPORT OF LABORATORY ANALYSIS

This report shall not be reproduced, except in full,
without the written consent of Pace Analytical Services, Inc.

Laboratory Certification IDs
LA Wastewater 04034
VA Drinking Water 213
FL NELAP E87627

Pace Analytical™
www.pacelabs.com

Pace Analytical Services, Inc.
9800 Kincey Avenue, Suite 100
Huntersville, NC 28078
Phone: 704.875.9092
Fax: 704.875.9091

Lab Project Number: 9233669
Client Project ID: Former Worth/NC101047.0002

Lab Sample No: 922322581 Project Sample Number: 9233669-012 Date Collected: 06/11/02 18:00
Client Sample ID: TRIP BLANK Matrix: Water Date Received: 06/13/02 10:40

Parameters	Results	Units	Report Limit	DF	Analyzed	By	CAS No.	Qual	RegLmt
GC/MS Volatiles									
GC/MS VOCs by 8260	Method: EPA 8260								
Acetone	ND	ug/l	100	1.0	06/14/02 19:09	DLK	67-64-1		
Benzene	ND	ug/l	5.0	1.0	06/14/02 19:09	DLK	71-43-2		
Bromobenzene	ND	ug/l	5.0	1.0	06/14/02 19:09	DLK	108-86-1		
Bromochloromethane	ND	ug/l	5.0	1.0	06/14/02 19:09	DLK	74-97-5		
Bromodichloromethane	ND	ug/l	5.0	1.0	06/14/02 19:09	DLK	75-27-4		
Bromoform	ND	ug/l	5.0	1.0	06/14/02 19:09	DLK	75-25-2		
Bromomethane	ND	ug/l	10.	1.0	06/14/02 19:09	DLK	74-83-9		
2-Butanone (MEK)	ND	ug/l	100	1.0	06/14/02 19:09	DLK	78-93-3		
n-Butylbenzene	ND	ug/l	5.0	1.0	06/14/02 19:09	DLK	104-51-8		
sec-Butylbenzene	ND	ug/l	5.0	1.0	06/14/02 19:09	DLK	135-98-8		
tert-Butylbenzene	ND	ug/l	5.0	1.0	06/14/02 19:09	DLK	98-06-6		
Carbon disulfide	ND	ug/l	10.	1.0	06/14/02 19:09	DLK	75-15-0		
Carbon tetrachloride	ND	ug/l	5.0	1.0	06/14/02 19:09	DLK	56-23-5		
Chlorobenzene	ND	ug/l	5.0	1.0	06/14/02 19:09	DLK	108-90-7		
Chloroethane	ND	ug/l	10.	1.0	06/14/02 19:09	DLK	75-00-3		
Chloroform	ND	ug/l	5.0	1.0	06/14/02 19:09	DLK	67-66-3		
Chloromethane	ND	ug/l	10.	1.0	06/14/02 19:09	DLK	74-87-3		
2-Chlorotoluene	ND	ug/l	5.0	1.0	06/14/02 19:09	DLK	95-49-8		
4-Chlorotoluene	ND	ug/l	5.0	1.0	06/14/02 19:09	DLK	106-43-4		
1,2-Dibromo-3-chloropropane	ND	ug/l	5.0	1.0	06/14/02 19:09	DLK	96-12-8		
Dibromochloromethane	ND	ug/l	5.0	1.0	06/14/02 19:09	DLK	124-48-1		
1,2-Dibromoethane (EDB)	ND	ug/l	5.0	1.0	06/14/02 19:09	DLK	106-93-4		
Dibromomethane	ND	ug/l	5.0	1.0	06/14/02 19:09	DLK	74-95-3		
1,2-Dichlorobenzene	ND	ug/l	5.0	1.0	06/14/02 19:09	DLK	95-50-1		
1,3-Dichlorobenzene	ND	ug/l	5.0	1.0	06/14/02 19:09	DLK	541-73-1		
1,4-Dichlorobenzene	ND	ug/l	5.0	1.0	06/14/02 19:09	DLK	106-46-7		
Dichlorodifluoromethane	ND	ug/l	10.	1.0	06/14/02 19:09	DLK	75-71-8		
1,1-Dichloroethane	ND	ug/l	5.0	1.0	06/14/02 19:09	DLK	75-34-3		
1,2-Dichloroethane	ND	ug/l	5.0	1.0	06/14/02 19:09	DLK	107-06-2		
1,1-Dichloroethene	ND	ug/l	5.0	1.0	06/14/02 19:09	DLK	75-35-4		
cis-1,2-Dichloroethene	ND	ug/l	5.0	1.0	06/14/02 19:09	DLK	156-59-2		
trans-1,2-Dichloroethene	ND	ug/l	5.0	1.0	06/14/02 19:09	DLK	156-60-5		
1,2-Dichloropropane	ND	ug/l	5.0	1.0	06/14/02 19:09	DLK	78-87-5		
1,3-Dichloropropane	ND	ug/l	5.0	1.0	06/14/02 19:09	DLK	142-28-9		
2,2-Dichloropropane	ND	ug/l	5.0	1.0	06/14/02 19:09	DLK	594-20-7		
1,1-Dichloropropene	ND	ug/l	5.0	1.0	06/14/02 19:09	DLK	563-58-6		
Diisopropyl ether	ND	ug/l	5.0	1.0	06/14/02 19:09	DLK	108-20-3		

Laboratory Certification IDs
NC Wastewater 12
NC Drinking Water 37706
SC 99006

REPORT OF LABORATORY ANALYSIS
This report shall not be reproduced, except in full,
without the written consent of Pace Analytical Services, Inc.

Laboratory Certification IDs
LA Wastewater 04034
VA Drinking Water 213
FL NELAP E87627

Pace Analytical™
www.pacelabs.com

Pace Analytical Services, Inc.
9800 Kincey Avenue, Suite 100
Huntersville, NC 28078
Phone: 704.875.9092
Fax: 704.875.9091

Lab Project Number: 9233669
Client Project ID: Former Worth/NC101047.0002

Lab Sample No: 922322581 Project Sample Number: 9233669-012 Date Collected: 06/11/02 18:00
Client Sample ID: TRIP BLANK Matrix: Water Date Received: 06/13/02 10:40

Parameters	Results	Units	Report Limit	DF	Analyzed	By	CAS No.	Qual	RegLmt
Ethylbenzene	ND	ug/l	5.0	1.0	06/14/02 19:09	DLK	100-41-4		
Hexachloro-1,3-butadiene	ND	ug/l	5.0	1.0	06/14/02 19:09	DLK	87-68-3		
Isopropylbenzene (Cumene)	ND	ug/l	5.0	1.0	06/14/02 19:09	DLK	98-82-8		
p-Isopropyltoluene	ND	ug/l	5.0	1.0	06/14/02 19:09	DLK	99-87-6		
Methylene chloride	ND	ug/l	5.0	1.0	06/14/02 19:09	DLK	75-09-2		
4-Methyl-2-pentanone (MIBK)	ND	ug/l	50.	1.0	06/14/02 19:09	DLK	108-10-1		
Methyl-tert-butyl ether	ND	ug/l	5.0	1.0	06/14/02 19:09	DLK	1634-04-4		
Naphthalene	ND	ug/l	5.0	1.0	06/14/02 19:09	DLK	91-20-3		
n-Propylbenzene	ND	ug/l	5.0	1.0	06/14/02 19:09	DLK	103-65-1		
Styrene	ND	ug/l	5.0	1.0	06/14/02 19:09	DLK	100-42-5		
1,1,1,2-Tetrachloroethane	ND	ug/l	5.0	1.0	06/14/02 19:09	DLK	630-20-6		
1,1,2,2-Tetrachloroethane	ND	ug/l	5.0	1.0	06/14/02 19:09	DLK	79-34-5		
Tetrachloroethene	ND	ug/l	5.0	1.0	06/14/02 19:09	DLK	127-18-4		
Tetrahydrofuran	ND	ug/l	50.	1.0	06/14/02 19:09	DLK	109-99-9		
Toluene	ND	ug/l	5.0	1.0	06/14/02 19:09	DLK	108-88-3		
1,2,3-Trichlorobenzene	ND	ug/l	5.0	1.0	06/14/02 19:09	DLK	87-61-6		
1,2,4-Trichlorobenzene	ND	ug/l	5.0	1.0	06/14/02 19:09	DLK	120-82-1		
1,1,1-Trichloroethane	ND	ug/l	5.0	1.0	06/14/02 19:09	DLK	71-55-6		
1,1,2-Trichloroethane	ND	ug/l	5.0	1.0	06/14/02 19:09	DLK	79-00-5		
Trichloroethene	ND	ug/l	5.0	1.0	06/14/02 19:09	DLK	79-01-6		
Trichlorofluoromethane	ND	ug/l	10.	1.0	06/14/02 19:09	DLK	75-69-4		
1,2,3-Trichloropropane	ND	ug/l	5.0	1.0	06/14/02 19:09	DLK	96-18-4		
1,2,4-Trimethylbenzene	ND	ug/l	5.0	1.0	06/14/02 19:09	DLK	95-63-6		
1,3,5-Trimethylbenzene	ND	ug/l	5.0	1.0	06/14/02 19:09	DLK	108-67-8		
Vinyl chloride	ND	ug/l	10.	1.0	06/14/02 19:09	DLK	75-01-4		
m&p-Xylene	ND	ug/l	10.	1.0	06/14/02 19:09	DLK			
o-Xylene	ND	ug/l	5.0	1.0	06/14/02 19:09	DLK	95-47-6		
Toluene-d8 (S)	99	%		1.0	06/14/02 19:09	DLK	2037-26-5		
4-Bromofluorobenzene (S)	101	%		1.0	06/14/02 19:09	DLK	460-00-4		
Dibromofluoromethane (S)	90	%		1.0	06/14/02 19:09	DLK			
1,2-Dichloroethane-d4 (S)	84	%		1.0	06/14/02 19:09	DLK	17060-07-0		

Laboratory Certification IDs
NC Wastewater 12
NC Drinking Water 37706
SC 99006

REPORT OF LABORATORY ANALYSIS
This report shall not be reproduced, except in full,
without the written consent of Pace Analytical Services, Inc.

Laboratory Certification IDs
LA Wastewater 04034
VA Drinking Water 213
FL NELAP E87627

Pace Analytical™
www.pacelabs.com

Pace Analytical Services, Inc.
9800 Kincey Avenue, Suite 100
Huntersville, NC 28078
Phone: 704.875.9092
Fax: 704.875.9091

Lab Project Number: 9233669
Client Project ID: Former Worth/NC101047.0002

Lab Sample No: 922322615 Project Sample Number: 9233669-013 Date Collected: 06/12/02 14:20
Client Sample ID: MW-1 DISSOLVED Matrix: Water Date Received: 06/13/02 10:40

Parameters	Results	Units	Report Limit	DF	Analyzed	By	CAS No.	Qual	RegLmt
Metals									
Dissolved Metals, ICP, Trace	Prep/Method: EPA 200.7 / EPA 200.7								
Iron, Dissolved	ND	mg/l	0.050	1.0	06/21/02 06:54	DJR	7439-89-6		
Manganese, Dissolved	0.53	mg/l	0.0050	1.0	06/21/02 06:54	DJR	7439-96-5		
Date Digested					06/17/02				

Laboratory Certification IDs
NC Wastewater 12
NC Drinking Water 37706
SC 99006

REPORT OF LABORATORY ANALYSIS
This report shall not be reproduced, except in full,
without the written consent of Pace Analytical Services, Inc.

Laboratory Certification IDs
LA Wastewater 04034
VA Drinking Water 213
FL NELAP E87627

Pace Analytical™
www.pacelabs.com

Pace Analytical Services, Inc.
9800 Kincey Avenue, Suite 100
Huntersville, NC 28078
Phone: 704.875.9092
Fax: 704.875.9091

Lab Project Number: 9233669
Client Project ID: Former Worth/NC101047.0002

Lab Sample No: 922322623 Project Sample Number: 9233669-014 Date Collected: 06/12/02 15:30
Client Sample ID: MW-2 DISSOLVED Matrix: Water Date Received: 06/13/02 10:40

Parameters	Results	Units	Report Limit	DF	Analyzed	By	CAS No.	Qual	RegLmt
Metals									
Dissolved Metals, ICP, Trace	Prep/Method: EPA 200.7 / EPA 200.7								
Iron, Dissolved	1.4	mg/l	0.050	1.0	06/21/02 06:59	DJR	7439-89-6		
Manganese, Dissolved	6.3	mg/l	0.0050	1.0	06/21/02 06:59	DJR	7439-96-5		
Date Digested					06/17/02				

Laboratory Certification IDs
NC Wastewater 12
NC Drinking Water 37706
SC 99006

REPORT OF LABORATORY ANALYSIS
This report shall not be reproduced, except in full,
without the written consent of Pace Analytical Services, Inc.

Laboratory Certification IDs
LA Wastewater 04034
VA Drinking Water 213
FL NELAP E87627

Pace Analytical™
www.pacelabs.com

Pace Analytical Services, Inc.
9800 Kincey Avenue, Suite 100
Huntersville, NC 28078
Phone: 704.875.9092
Fax: 704.875.9091

Lab Project Number: 9233669
Client Project ID: Former Worth/NC101047.0002

Lab Sample No: 922322631 Project Sample Number: 9233669-015 Date Collected: 06/12/02 13:00
Client Sample ID: MW-4 DISSOLVED Matrix: Water Date Received: 06/13/02 10:40

Parameters	Results	Units	Report Limit	DF	Analyzed	By	CAS No.	Qual	RegLmt
Metals									
Dissolved Metals, ICP, Trace	Prep/Method: EPA 200.7 / EPA 200.7								
Iron, Dissolved	ND	mg/l	0.050	1.0	06/21/02 07:04	DJR	7439-89-6		
Manganese, Dissolved	0.33	mg/l	0.0050	1.0	06/21/02 07:04	DJR	7439-96-5		
Date Digested					06/17/02				

Laboratory Certification IDs
NC Wastewater 12
NC Drinking Water 37706
SC 99006

REPORT OF LABORATORY ANALYSIS
This report shall not be reproduced, except in full,
without the written consent of Pace Analytical Services, Inc.

Laboratory Certification IDs
LA Wastewater 04034
VA Drinking Water 213
FL NELAP E87627

Pace Analytical™
www.pacelabs.com

Pace Analytical Services, Inc.
9800 Kincey Avenue, Suite 100
Huntersville, NC 28078
Phone: 704.875.9092
Fax: 704.875.9091

Lab Project Number: 9233669
Client Project ID: Former Worth/NC101047.0002

Lab Sample No: 922322649 Project Sample Number: 9233669-016 Date Collected: 06/12/02 11:35
Client Sample ID: MW-7 DISSOLVED Matrix: Water Date Received: 06/13/02 10:40

Parameters	Results	Units	Report Limit	DF	Analyzed	By	CAS No.	Qual	RegLmt
Metals									
Dissolved Metals, ICP, Trace	Prep/Method: EPA 200.7 / EPA 200.7								
Iron, Dissolved	0.14	mg/l	0.050	1.0	06/21/02 07:09	DJR	7439-89-6		
Manganese, Dissolved	0.55	mg/l	0.0050	1.0	06/21/02 07:09	DJR	7439-96-5		
Date Digested					06/17/02				

Laboratory Certification IDs
NC Wastewater 12
NC Drinking Water 37706
SC 99006

REPORT OF LABORATORY ANALYSIS
This report shall not be reproduced, except in full,
without the written consent of Pace Analytical Services, Inc.

Laboratory Certification IDs
LA Wastewater 04034
VA Drinking Water 213
FL NELAP E87627

Pace Analytical™
www.pacelabs.com

Pace Analytical Services, Inc.
9800 Kincey Avenue, Suite 100
Huntersville, NC 28078
Phone: 704.875.9092
Fax: 704.875.9091

Lab Project Number: 9233669
Client Project ID: Former Worth/NC101047.0002

Lab Sample No: 922322656 Project Sample Number: 9233669-017 Date Collected: 06/11/02 14:30
Client Sample ID: MW-9 DISSOLVED Matrix: Water Date Received: 06/13/02 10:40

Parameters	Results	Units	Report Limit	DF	Analyzed	By	CAS No.	Qual	RegLmt
Metals									
Dissolved Metals, ICP, Trace	Prep/Method: EPA 200.7 / EPA 200.7								
Iron, Dissolved	0.12	mg/l	0.050	1.0	06/21/02 06:35	DJR	7439-89-6		
Manganese, Dissolved	0.45	mg/l	0.0050	1.0	06/21/02 06:35	DJR	7439-96-5		
Date Digested					06/17/02				

Laboratory Certification IDs
NC Wastewater 12
NC Drinking Water 37706
SC 99006

REPORT OF LABORATORY ANALYSIS

This report shall not be reproduced, except in full,
without the written consent of Pace Analytical Services, Inc.

Laboratory Certification IDs
LA Wastewater 04034
VA Drinking Water 213
FL NELAP E87627

Pace Analytical™
www.pacelabs.com

Pace Analytical Services, Inc.
9800 Kincey Avenue, Suite 100
Huntersville, NC 28078
Phone: 704.875.9092
Fax: 704.875.9091

Lab Project Number: 9233669
Client Project ID: Former Worth/NC101047.0002

Lab Sample No: 922322714 Project Sample Number: 9233669-018 Date Collected: 06/11/02 13:20
Client Sample ID: MW-10 DISSOLVED Matrix: Water Date Received: 06/13/02 10:40

Parameters	Results	Units	Report Limit	DF	Analyzed	By	CAS No.	Qual	RegLmt
Metals									
Dissolved Metals, ICP, Trace	Prep/Method: EPA 200.7 / EPA 200.7								
Iron, Dissolved	0.091	mg/l	0.050	1.0	06/21/02 06:40	DJR	7439-89-6		
Manganese, Dissolved	0.071	mg/l	0.0050	1.0	06/21/02 06:40	DJR	7439-96-5		
Date Digested					06/17/02				

Laboratory Certification IDs
NC Wastewater 12
NC Drinking Water 37706
SC 99006

REPORT OF LABORATORY ANALYSIS
This report shall not be reproduced, except in full,
without the written consent of Pace Analytical Services, Inc.

Laboratory Certification IDs
LA Wastewater 04034
VA Drinking Water 213
FL NELAP E87627

Pace Analytical™
www.pacelabs.com

Pace Analytical Services, Inc.
9800 Kincey Avenue, Suite 100
Huntersville, NC 28078
Phone: 704.875.9092
Fax: 704.875.9091

Lab Project Number: 9233669
Client Project ID: Former Worth/NC101047.0002

PARAMETER FOOTNOTES

Dilution factor shown represents the factor applied to the reported result and reporting limit due to changes in sample preparation, dilution of the extract, or moisture content

ND	Not detected at or above adjusted reporting limit
NC	Not Calculable
J	Estimated concentration above the adjusted method detection limit and below the adjusted reporting limit
MDL	Adjusted Method Detection Limit
(S)	Surrogate
[1]	Compound concentration exceeds the calibration range of the instrument (CLP E-Flag).
[2]	The surrogate and/or spike recovery was outside acceptance limits.

Laboratory Certification IDs
NC Wastewater 12
NC Drinking Water 37706
SC 99006

REPORT OF LABORATORY ANALYSIS
This report shall not be reproduced, except in full,
without the written consent of Pace Analytical Services, Inc.

Laboratory Certification IDs
LA Wastewater 04034
VA Drinking Water 213
FL NELAP E87627

Pace Analytical™
www.pacelabs.com

Pace Analytical Services, Inc.
54 Ravenscroft Drive
Asheville, NC 28801
Phone: 828.254.7176
Fax: 828.252.4618

Lab Project Number: 9330099
Client Project ID: ARCADIS-9233669

Lab Sample No: 922322417 Project Sample Number: 9330099-001 Date Collected: 06/12/02 14:20
Client Sample ID: MW-1 Matrix: Water Date Received: 06/13/02 10:40

Parameters	Results	Units	Report Limit	Analyzed	By	CAS No.	Qual	RegLmt
Wet Chemistry								
Total Organic Carbon	Method: SM 5310C							
Total Organic Carbon	7.3	mg/l	0.50	06/17/02	EWS	7440-44-0		

Date: 06/19/02

Laboratory Certification IDs
NC Wastewater 40
NC Drinking Water 37712

REPORT OF LABORATORY ANALYSIS

This report shall not be reproduced, except in full,
without the written consent of Pace Analytical Services, Inc.

Laboratory Certification IDs
TN Drinking Water 02980
SC Environmental 99030

Pace Analytical™
www.pacelabs.com

Pace Analytical Services, Inc.
54 Ravenscroft Drive
Asheville, NC 28801
Phone: 828.254.7176
Fax: 828.252.4618

Lab Project Number: 9330099
Client Project ID: ARCADIS-9233669

Lab Sample No: 922322425 Project Sample Number: 9330099-002 Date Collected: 06/12/02 15:30
Client Sample ID: MW-2 Matrix: Water Date Received: 06/13/02 10:40

Parameters	Results	Units	Report Limit	Analyzed	By	CAS No.	Qual	RegLmt
Wet Chemistry								
Total Organic Carbon	Method: SM 5310C							
Total Organic Carbon	21.	mg/l	0.50	06/17/02	EWS	7440-44-0		

Laboratory Certification IDs
NC Wastewater 40
NC Drinking Water 37712

REPORT OF LABORATORY ANALYSIS

This report shall not be reproduced, except in full,
without the written consent of Pace Analytical Services, Inc.

Laboratory Certification IDs
TN Drinking Water 02980
SC Environmental 99030

Pace Analytical™
www.pacelabs.com

Pace Analytical Services, Inc.
54 Ravenscroft Drive
Asheville, NC 28801
Phone: 828.254.7176
Fax: 828.252.4618

Lab Project Number: 9330099
Client Project ID: ARCADIS-9233669

Lab Sample No: 922322441 Project Sample Number: 9330099-003 Date Collected: 06/12/02 13:00
Client Sample ID: MW-4 Matrix: Water Date Received: 06/13/02 10:40

Parameters	Results	Units	Report Limit	Analyzed	By	CAS No.	Qual	RegLmt
Wet Chemistry								
Total Organic Carbon	Method: SM 5310C							
Total Organic Carbon	10.	mg/l	0.50	06/17/02	EWS	7440-44-0		

Laboratory Certification IDs
NC Wastewater 40
NC Drinking Water 37712

REPORT OF LABORATORY ANALYSIS

This report shall not be reproduced, except in full,
without the written consent of Pace Analytical Services, Inc.

Laboratory Certification IDs
TN Drinking Water 02980
SC Environmental 99030

Pace Analytical™
www.pacelabs.com

Pace Analytical Services, Inc.
54 Ravenscroft Drive
Asheville, NC 28801
Phone: 828.254.7176
Fax: 828.252.4618

Lab Project Number: 9330099
Client Project ID: ARCADIS-9233669

Lab Sample No: 922322474 Project Sample Number: 9330099-004 Date Collected: 06/12/02 11:35
Client Sample ID: MW-7 Matrix: Water Date Received: 06/13/02 10:40

Parameters	Results	Units	Report Limit	Analyzed	By	CAS No.	Qual	RegLmt
Wet Chemistry								
Total Organic Carbon	Method: SM 5310C							
Total Organic Carbon	6.1	mg/l	0.50	06/17/02	EWS	7440-44-0		

Laboratory Certification IDs
NC Wastewater 40
NC Drinking Water 37712

REPORT OF LABORATORY ANALYSIS

This report shall not be reproduced, except in full,
without the written consent of Pace Analytical Services, Inc.

Laboratory Certification IDs
TN Drinking Water 02980
SC Environmental 99030

Pace Analytical™
www.pacelabs.com

Pace Analytical Services, Inc.
54 Ravenscroft Drive
Asheville, NC 28801
Phone: 828.254.7176
Fax: 828.252.4618

Lab Project Number: 9330099
Client Project ID: ARCADIS-9233669

Lab Sample No: 922322490 Project Sample Number: 9330099-005 Date Collected: 06/11/02 14:30
Client Sample ID: MW-9 Matrix: Water Date Received: 06/13/02 10:40

Parameters	Results	Units	Report Limit	Analyzed	By	CAS No.	Qual	RegLmt
Wet Chemistry								
Total Organic Carbon	Method: SM 5310C							
Total Organic Carbon	7.9	mg/l	0.50	06/17/02	EWS	7440-44-0		

Laboratory Certification IDs
NC Wastewater 40
NC Drinking Water 37712

REPORT OF LABORATORY ANALYSIS

This report shall not be reproduced, except in full,
without the written consent of Pace Analytical Services, Inc.

Laboratory Certification IDs
TN Drinking Water 02980
SC Environmental 99030

Pace Analytical™
www.pacelabs.com

Pace Analytical Services, Inc.
54 Ravenscroft Drive
Asheville, NC 28801
Phone: 828.254.7176
Fax: 828.252.4618

Lab Project Number: 9330099
Client Project ID: ARCADIS-9233669

Lab Sample No: 922322508 Project Sample Number: 9330099-006 Date Collected: 06/11/02 13:20
Client Sample ID: MW-10 Matrix: Water Date Received: 06/13/02 10:40

Parameters	Results	Units	Report Limit	Analyzed	By	CAS No.	Qual	RegLmt
Wet Chemistry								
Total Organic Carbon	Method: SM 5310C							
Total Organic Carbon	3.4	mg/l	0.50	06/17/02	EWS	7440-44-0		

Laboratory Certification IDs
NC Wastewater 40
NC Drinking Water 37712

REPORT OF LABORATORY ANALYSIS

This report shall not be reproduced, except in full,
without the written consent of Pace Analytical Services, Inc.

Laboratory Certification IDs
TN Drinking Water 02980
SC Environmental 99030

Pace Analytical™
www.pacelabs.com

Pace Analytical Services, Inc.
54 Ravenscroft Drive
Asheville, NC 28801
Phone: 828.254.7176
Fax: 828.252.4618

Lab Project Number: 9330099
Client Project ID: ARCADIS-9233669

PARAMETER FOOTNOTES

ND	Not detected at or above adjusted reporting limit
NC	Not Calculable
J	Estimated concentration above the adjusted method detection limit and below the adjusted reporting limit
MDL	Adjusted Method Detection Limit

Laboratory Certification IDs
NC Wastewater 40
NC Drinking Water 37712

REPORT OF LABORATORY ANALYSIS

This report shall not be reproduced, except in full,
without the written consent of Pace Analytical Services, Inc.

Laboratory Certification IDs
TN Drinking Water 02980
SC Environmental 99030

Order #: P0206283
Report Date: 06/25/02
Client Proj Name: 9233669
Client Proj #: Former Worth

Client Name: Pace Analytical
Contact: Sherri Howard
Address: 9800 Kincey Ave
Suite 100
Huntersville, NC 28078

Lab Sample #: P0206283-01

Sample Description	Matrix	Sampled Date/Time	Received
MW-1	Water	12 Jun. 02 14:20	17 Jun. 02

Analyte(s)	Result	PQL	Units	Method #	Analyst	Analysis Date
RiskAnalysis						
Water						
Carbon dioxide	34	0.60	mg/L	AM20GAX	pd	6/24/02
Ethane	2700	5.0	ng/L	AM18	pd	6/24/02
Ethene	350	5.0	ng/L	AM18	pd	6/24/02
Methane	2.1	0.015	ug/L	AM20GAX	pd	6/24/02

Order #: P0206283
Report Date: 06/25/02
Client Proj Name: 9233669
Client Proj #: Former Worth

Client Name: Pace Analytical
Contact: Sherri Howard
Address: 9800 Kincey Ave
Suite 100
Huntersville, NC 28078

Lab Sample #: P0206283-02

Sample Description	Matrix	Sampled Date/Time	Received
MW-2	Water	12 Jun. 02 15:30	17 Jun. 02

Analyte(s)	Result	PQL	Units	Method #	Analyst	Analysis Date
RiskAnalysis						
Water						
Carbon dioxide	230	0.60	mg/L	AM20GAX	pd	6/24/02
Ethane	1200	5.0	ng/L	AM18	pd	6/24/02
Ethene	6500	5.0	ng/L	AM18	pd	6/24/02
Methane	34	0.015	ug/L	AM20GAX	pd	6/24/02

Order #: P0206283
Report Date: 06/25/02
Client Proj Name: 9233669
Client Proj #: Former Worth

Client Name: Pace Analytical
Contact: Sherri Howard
Address: 9800 Kincey Ave
Suite 100
Huntersville, NC 28078

Lab Sample #: P0206283-03

Sample Description	Matrix	Sampled Date/Time	Received
MW-4	Water	12 Jun. 02 13:00	17 Jun. 02

Analyte(s)	Result	PQL	Units	Method #	Analyst	Analysis Date
RiskAnalysis						
Water						
Carbon dioxide	40	0.60	mg/L	AM20GAX	pd	6/24/02
Ethane	5400	5.0	ng/L	AM18	pd	6/24/02
Ethene	18000	5.0	ng/L	AM18	pd	6/24/02
Methane	8.6	0.015	ug/L	AM20GAX	pd	6/24/02

Order #: P0206283
Report Date: 06/25/02
Client Proj Name: 9233669
Client Proj #: Former Worth

Client Name: Pace Analytical
Contact: Sherri Howard
Address: 9800 Kincey Ave
Suite 100
Huntersville, NC 28078

Lab Sample #: P0206283-04

Sample Description	Matrix	Sampled Date/Time	Received
MW-7	Water	12 Jun. 02 11:35	17 Jun. 02

Analyte(s)	Result	PQL	Units	Method #	Analyst	Analysis Date
RiskAnalysis						
Water						
Carbon dioxide	84	0.60	mg/L	AM20GAX	pd	6/24/02
Ethane	98	5.0	ng/L	AM18	pd	6/24/02
Ethene	180	5.0	ng/L	AM18	pd	6/24/02
Methane	3.7	0.015	ug/L	AM20GAX	pd	6/24/02

Order #: P0206283
Report Date: 06/25/02
Client Proj Name: 9233669
Client Proj #: Former Worth

Client Name: Pace Analytical
Contact: Sherri Howard
Address: 9800 Kincey Ave
Suite 100
Huntersville, NC 28078

Lab Sample #: P0206283-05

Sample Description	Matrix	Sampled Date/Time	Received
MW-9	Water	11 Jun. 02 14:30	17 Jun. 02

Analyte(s)	Result	PQL	Units	Method #	Analyst	Analysis Date
RiskAnalysis						
Water						
Carbon dioxide	28	0.60	mg/L	AM20GAX	pd	6/24/02
Ethane	64	5.0	ng/L	AM18	pd	6/24/02
Ethene	240	5.0	ng/L	AM18	pd	6/24/02
Methane	1.7	0.015	ug/L	AM20GAX	pd	6/24/02

Order #: P0206283
Report Date: 06/25/02
Client Proj Name: 9233669
Client Proj #: Former Worth

Client Name: Pace Analytical
Contact: Sherri Howard
Address: 9800 Kincey Ave
Suite 100
Huntersville, NC 28078

Lab Sample #: P0206283-06

Sample Description	Matrix	Sampled Date/Time	Received
MW-10	Water	11 Jun. 02 13:20	17 Jun. 02

Analyte(s)	Result	PQL	Units	Method #	Analyst	Analysis Date
RiskAnalysis						
Water						
Carbon dioxide	23	0.60	mg/L	AM20GAX	pd	6/24/02
Ethane	48	5.0	ng/L	AM18	pd	6/24/02
Ethene	1700	5.0	ng/L	AM18	pd	6/24/02
Methane	4.8	0.015	ug/L	AM20GAX	pd	6/24/02

Pace Analytical™
www.pacelabs.com

Pace Analytical Services, Inc.
9800 Kincey Avenue, Suite 100
Huntersville, NC 28078
Phone: 704.875.9092
Fax: 704.875.9091

QUALITY CONTROL DATA

Lab Project Number: 9233669
Client Project ID: Former Worth/NC101047.0002

QC Batch: 58780 — Analysis Method: EPA 8260
QC Batch Method: EPA 8260 — Analysis Description: GC/MS VOCs by 8260
Associated Lab Samples: 922322482

METHOD BLANK: 922323647
Associated Lab Samples: 922322482

Parameter	Units	Blank Result	Reporting Limit	Footnotes
Acetone	ug/l	ND	100	
Benzene	ug/l	ND	5.0	
Bromobenzene	ug/l	ND	5.0	
Bromochloromethane	ug/l	ND	5.0	
Bromodichloromethane	ug/l	ND	5.0	
Bromoform	ug/l	ND	5.0	
Bromomethane	ug/l	ND	10.	
2-Butanone (MEK)	ug/l	ND	100	
n-Butylbenzene	ug/l	ND	5.0	
sec-Butylbenzene	ug/l	ND	5.0	
tert-Butylbenzene	ug/l	ND	5.0	
Carbon disulfide	ug/l	ND	10.	
Carbon tetrachloride	ug/l	ND	5.0	
Chlorobenzene	ug/l	ND	5.0	
Chloroethane	ug/l	ND	10.	
Chloroform	ug/l	ND	5.0	
Chloromethane	ug/l	ND	10.	
2-Chlorotoluene	ug/l	ND	5.0	
4-Chlorotoluene	ug/l	ND	5.0	
1,2-Dibromo-3-chloropropane	ug/l	ND	5.0	
Dibromochloromethane	ug/l	ND	5.0	
1,2-Dibromoethane (EDB)	ug/l	ND	5.0	
Dibromomethane	ug/l	ND	5.0	
1,2-Dichlorobenzene	ug/l	ND	5.0	
1,3-Dichlorobenzene	ug/l	ND	5.0	
1,4-Dichlorobenzene	ug/l	ND	5.0	
Dichlorodifluoromethane	ug/l	ND	10.	
1,1-Dichloroethane	ug/l	ND	5.0	
1,2-Dichloroethane	ug/l	ND	5.0	
1,1-Dichloroethene	ug/l	ND	5.0	
cis-1,2-Dichloroethene	ug/l	ND	5.0	

Laboratory Certification IDs
NC Wastewater 12
NC Drinking Water 37706
SC 99006

REPORT OF LABORATORY ANALYSIS
This report shall not be reproduced, except in full,
without the written consent of Pace Analytical Services, Inc.

Laboratory Certification IDs
LA Wastewater 04034
VA Drinking Water 213
FL NELAP E87627

Pace Analytical™
www.pacelabs.com

Pace Analytical Services, Inc.
9800 Kincey Avenue, Suite 100
Huntersville, NC 28078
Phone: 704.875.9092
Fax: 704.875.9091

QUALITY CONTROL DATA

Lab Project Number: 9233669
Client Project ID: Former Worth/NC101047.0002

METHOD BLANK: 922323647
Associated Lab Samples: 922322482

Parameter	Units	Blank Result	Reporting Limit	Footnotes
trans-1,2-Dichloroethene	ug/l	ND	5.0	
1,2-Dichloropropane	ug/l	ND	5.0	
1,3-Dichloropropane	ug/l	ND	5.0	
2,2-Dichloropropane	ug/l	ND	5.0	
1,1-Dichloropropene	ug/l	ND	5.0	
Diisopropyl ether	ug/l	ND	5.0	
Ethylbenzene	ug/l	ND	5.0	
Hexachloro-1,3-butadiene	ug/l	ND	5.0	
Isopropylbenzene (Cumene)	ug/l	ND	5.0	
p-Isopropyltoluene	ug/l	ND	5.0	
Methylene chloride	ug/l	ND	5.0	
4-Methyl-2-pentanone (MIBK)	ug/l	ND	50.	
Methyl-tert-butyl ether	ug/l	ND	5.0	
Naphthalene	ug/l	ND	5.0	
n-Propylbenzene	ug/l	ND	5.0	
Styrene	ug/l	ND	5.0	
1,1,1,2-Tetrachloroethane	ug/l	ND	5.0	
1,1,2,2-Tetrachloroethane	ug/l	ND	5.0	
Tetrachloroethene	ug/l	ND	5.0	
Tetrahydrofuran	ug/l	ND	50.	
Toluene	ug/l	ND	5.0	
1,2,3-Trichlorobenzene	ug/l	ND	5.0	
1,2,4-Trichlorobenzene	ug/l	ND	5.0	
1,1,1-Trichloroethane	ug/l	ND	5.0	
1,1,2-Trichloroethane	ug/l	ND	5.0	
Trichloroethene	ug/l	ND	5.0	
Trichlorofluoromethane	ug/l	ND	10.	
1,2,3-Trichloropropane	ug/l	ND	5.0	
1,2,4-Trimethylbenzene	ug/l	ND	5.0	
1,3,5-Trimethylbenzene	ug/l	ND	5.0	
Vinyl chloride	ug/l	ND	10.	
m&p-Xylene	ug/l	ND	10.	
o-Xylene	ug/l	ND	5.0	
Toluene-d8 (S)	%	99		
4-Bromofluorobenzene (S)	%	91		
Dibromofluoromethane (S)	%	93		

Laboratory Certification IDs
NC Wastewater 12
NC Drinking Water 37706
SC 99006

REPORT OF LABORATORY ANALYSIS
This report shall not be reproduced, except in full,
without the written consent of Pace Analytical Services, Inc.

Laboratory Certification IDs
LA Wastewater 04034
VA Drinking Water 213
FL NELAP E87627

Pace Analytical™
www.pacelabs.com

Pace Analytical Services, Inc.
9800 Kincey Avenue, Suite 100
Huntersville, NC 28078
Phone: 704.875.9092
Fax: 704.875.9091

QUALITY CONTROL DATA

Lab Project Number: 9233669
Client Project ID: Former Worth/NC101047.0002

METHOD BLANK: 922323647
Associated Lab Samples: 922322482

Parameter	Units	Blank Result	Reporting Limit	Footnotes
1,2-Dichloroethane-d4 (S)	%	95		

LABORATORY CONTROL SAMPLE: 922323654

Parameter	Units	Spike Conc.	LCS Result	LCS % Rec	Footnotes
Acetone	ug/l	100.00	72.10	72	
Benzene	ug/l	50.00	51.09	102	
Bromobenzene	ug/l	50.00	50.02	100	
Bromochloromethane	ug/l	50.00	47.50	95	
Bromodichloromethane	ug/l	50.00	48.56	97	
Bromoform	ug/l	50.00	44.45	89	
Bromomethane	ug/l	50.00	120.5	241	1
2-Butanone (MEK)	ug/l	100.00	80.26	80	
n-Butylbenzene	ug/l	50.00	59.12	118	
sec-Butylbenzene	ug/l	50.00	55.44	111	
tert-Butylbenzene	ug/l	50.00	51.86	104	
Carbon disulfide	ug/l	100.00	99.30	99	
Carbon tetrachloride	ug/l	50.00	53.48	107	
Chlorobenzene	ug/l	50.00	52.27	105	
Chloroethane	ug/l	50.00	44.07	88	
Chloroform	ug/l	50.00	48.46	97	
Chloromethane	ug/l	50.00	39.34	79	
2-Chlorotoluene	ug/l	50.00	50.07	100	
4-Chlorotoluene	ug/l	50.00	50.43	101	
1,2-Dibromo-3-chloropropane	ug/l	50.00	50.57	101	
Dibromochloromethane	ug/l	50.00	45.50	91	
1,2-Dibromoethane (EDB)	ug/l	50.00	51.51	103	
Dibromomethane	ug/l	50.00	48.10	96	
1,2-Dichlorobenzene	ug/l	50.00	49.98	100	
1,3-Dichlorobenzene	ug/l	50.00	51.77	104	
1,4-Dichlorobenzene	ug/l	50.00	51.29	103	
Dichlorodifluoromethane	ug/l	50.00	47.51	95	
1,1-Dichloroethane	ug/l	50.00	47.31	95	
1,2-Dichloroethane	ug/l	50.00	48.36	97	

Laboratory Certification IDs
NC Wastewater 12
NC Drinking Water 37706
SC 99006

REPORT OF LABORATORY ANALYSIS
This report shall not be reproduced, except in full,
without the written consent of Pace Analytical Services, Inc.

Laboratory Certification IDs
LA Wastewater 04034
VA Drinking Water 213
FL NELAP E87627

Pace Analytical™
www.pacelabs.com

Pace Analytical Services, Inc.
9800 Kincey Avenue, Suite 100
Huntersville, NC 28078
Phone: 704.875.9092
Fax: 704.875.9091

QUALITY CONTROL DATA

Lab Project Number: 9233669
Client Project ID: Former Worth/NC101047.0002

LABORATORY CONTROL SAMPLE: 922323654

Parameter	Units	Spike Conc.	LCS Result	LCS % Rec	Footnotes
1,1-Dichloroethene	ug/l	50.00	52.16	104	
cis-1,2-Dichloroethene	ug/l	50.00	49.51	99	
trans-1,2-Dichloroethene	ug/l	50.00	52.21	104	
1,2-Dichloropropane	ug/l	50.00	51.39	103	
1,3-Dichloropropane	ug/l	50.00	51.71	103	
2,2-Dichloropropane	ug/l	50.00	49.69	99	
1,1-Dichloropropene	ug/l	50.00	56.86	114	
Diisopropyl ether	ug/l	50.00	44.80	90	
Ethylbenzene	ug/l	50.00	53.71	107	
Hexachloro-1,3-butadiene	ug/l	50.00	57.30	115	
Isopropylbenzene (Cumene)	ug/l	50.00	54.81	110	
p-Isopropyltoluene	ug/l	50.00	55.36	111	
Methylene chloride	ug/l	50.00	46.05	92	
4-Methyl-2-pentanone (MIBK)	ug/l	100.00	92.16	92	
Methyl-tert-butyl ether	ug/l	50.00	43.68	87	
Naphthalene	ug/l	50.00	53.15	106	
n-Propylbenzene	ug/l	50.00	54.38	109	
Styrene	ug/l	50.00	53.96	108	
1,1,1,2-Tetrachloroethane	ug/l	50.00	55.76	112	
1,1,2,2-Tetrachloroethane	ug/l	50.00	52.04	104	
Tetrachloroethene	ug/l	50.00	58.66	117	
Tetrahydrofuran	ug/l	500.00	426.7	85	
Toluene	ug/l	50.00	50.35	101	
1,2,3-Trichlorobenzene	ug/l	50.00	51.13	102	
1,2,4-Trichlorobenzene	ug/l	50.00	53.49	107	
1,1,1-Trichloroethane	ug/l	50.00	50.42	101	
1,1,2-Trichloroethane	ug/l	50.00	50.86	102	
Trichloroethene	ug/l	50.00	56.76	114	
Trichlorofluoromethane	ug/l	50.00	44.29	89	
1,2,3-Trichloropropane	ug/l	50.00	56.18	112	
1,2,4-Trimethylbenzene	ug/l	50.00	52.83	106	
1,3,5-Trimethylbenzene	ug/l	50.00	52.71	105	
Vinyl chloride	ug/l	50.00	41.03	82	
m&p-Xylene	ug/l	100.00	109.3	109	
o-Xylene	ug/l	50.00	53.55	107	
Toluene-d8 (S)				101	
4-Bromofluorobenzene (S)				104	

Laboratory Certification IDs
NC Wastewater 12
NC Drinking Water 37706
SC 99006

REPORT OF LABORATORY ANALYSIS
This report shall not be reproduced, except in full,
without the written consent of Pace Analytical Services, Inc.

Laboratory Certification IDs
LA Wastewater 04034
VA Drinking Water 213
FL NELAP E87627

Pace Analytical™
www.pacelabs.com

Pace Analytical Services, Inc.
9800 Kincey Avenue, Suite 100
Huntersville, NC 28078
Phone: 704.875.9092
Fax: 704.875.9091

QUALITY CONTROL DATA

Lab Project Number: 9233669
Client Project ID: Former Worth/NC101047.0002

LABORATORY CONTROL SAMPLE: 922323654

Parameter	Units	Spike Conc.	LCS Result	LCS % Rec	Footnotes
Dibromofluoromethane (S)				94	
1,2-Dichloroethane-d4 (S)				91	

MATRIX SPIKE: 922323753

Parameter	Units	922320866 Result	Spike Conc.	MS Result	MS % Rec	Footnotes
Benzene	ug/l	0	50.00	49.87	100	
Chlorobenzene	ug/l	4.180	50.00	55.91	104	
1,1-Dichloroethene	ug/l	2.668	50.00	57.63	110	
Toluene	ug/l	0	50.00	47.78	96	
Trichloroethene	ug/l	215.9	50.00	251.9	72	
Toluene-d8 (S)					92	
4-Bromofluorobenzene (S)					102	
Dibromofluoromethane (S)					94	
1,2-Dichloroethane-d4 (S)					90	

SAMPLE DUPLICATE: 922323662

Parameter	Units	922322482 Result	DUP Result	RPD	Footnotes
Acetone	ug/l	ND	ND	NC	
Benzene	ug/l	ND	ND	NC	
Bromobenzene	ug/l	ND	ND	NC	
Bromochloromethane	ug/l	ND	ND	NC	
Bromodichloromethane	ug/l	ND	ND	NC	
Bromoform	ug/l	ND	ND	NC	
Bromomethane	ug/l	ND	ND	NC	
2-Butanone (MEK)	ug/l	ND	ND	NC	
n-Butylbenzene	ug/l	ND	ND	NC	
sec-Butylbenzene	ug/l	ND	ND	NC	
tert-Butylbenzene	ug/l	ND	ND	NC	
Carbon disulfide	ug/l	ND	ND	NC	
Carbon tetrachloride	ug/l	ND	ND	NC	
Chlorobenzene	ug/l	ND	ND	NC	

Laboratory Certification IDs
NC Wastewater 12
NC Drinking Water 37706
SC 99006

REPORT OF LABORATORY ANALYSIS
This report shall not be reproduced, except in full,
without the written consent of Pace Analytical Services, Inc.

Laboratory Certification IDs
LA Wastewater 04034
VA Drinking Water 213
FL NELAP E87627

Pace Analytical™
www.pacelabs.com

Pace Analytical Services, Inc.
9800 Kincey Avenue, Suite 100
Huntersville, NC 28078
Phone: 704.875.9092
Fax: 704.875.9091

QUALITY CONTROL DATA

Lab Project Number: 9233669
Client Project ID: Former Worth/NC101047.0002

SAMPLE DUPLICATE: 922323662

Parameter	Units	922322482 Result	DUP Result	RPD	Footnotes
Chloroethane	ug/l	ND	ND	NC	
Chloroform	ug/l	ND	ND	NC	
Chloromethane	ug/l	ND	ND	NC	
2-Chlorotoluene	ug/l	ND	ND	NC	
4-Chlorotoluene	ug/l	ND	ND	NC	
1,2-Dibromo-3-chloropropane	ug/l	ND	ND	NC	
Dibromochloromethane	ug/l	ND	ND	NC	
1,2-Dibromoethane (EDB)	ug/l	ND	ND	NC	
Dibromomethane	ug/l	ND	ND	NC	
1,2-Dichlorobenzene	ug/l	ND	ND	NC	
1,3-Dichlorobenzene	ug/l	ND	ND	NC	
1,4-Dichlorobenzene	ug/l	ND	ND	NC	
Dichlorodifluoromethane	ug/l	ND	ND	NC	
1,1-Dichloroethane	ug/l	ND	ND	NC	
1,2-Dichloroethane	ug/l	ND	ND	NC	
1,1-Dichloroethene	ug/l	ND	ND	NC	
cis-1,2-Dichloroethene	ug/l	ND	ND	NC	
trans-1,2-Dichloroethene	ug/l	ND	ND	NC	
1,2-Dichloropropane	ug/l	ND	ND	NC	
1,3-Dichloropropane	ug/l	ND	ND	NC	
2,2-Dichloropropane	ug/l	ND	ND	NC	
1,1-Dichloropropene	ug/l	ND	ND	NC	
Diisopropyl ether	ug/l	ND	ND	NC	
Ethylbenzene	ug/l	ND	ND	NC	
Hexachloro-1,3-butadiene	ug/l	ND	ND	NC	
Isopropylbenzene (Cumene)	ug/l	ND	ND	NC	
p-Isopropyltoluene	ug/l	ND	ND	NC	
Methylene chloride	ug/l	ND	ND	NC	
4-Methyl-2-pentanone (MIBK)	ug/l	ND	ND	NC	
Methyl-tert-butyl ether	ug/l	ND	ND	NC	
Naphthalene	ug/l	ND	ND	NC	
n-Propylbenzene	ug/l	ND	ND	NC	
Styrene	ug/l	ND	ND	NC	
1,1,1,2-Tetrachloroethane	ug/l	ND	ND	NC	
1,1,2,2-Tetrachloroethane	ug/l	ND	ND	NC	
Tetrachloroethene	ug/l	ND	ND	NC	
Tetrahydrofuran	ug/l	ND	ND	NC	

Laboratory Certification IDs
NC Wastewater 12
NC Drinking Water 37706
SC 99006

REPORT OF LABORATORY ANALYSIS
This report shall not be reproduced, except in full,
without the written consent of Pace Analytical Services, Inc.

Laboratory Certification IDs
LA Wastewater 04034
VA Drinking Water 213
FL NELAP E87627

Pace Analytical™
www.pacelabs.com

Pace Analytical Services, Inc.
9800 Kincey Avenue, Suite 100
Huntersville, NC 28078
Phone: 704.875.9092
Fax: 704.875.9091

QUALITY CONTROL DATA

Lab Project Number: 9233669
Client Project ID: Former Worth/NC101047.0002

SAMPLE DUPLICATE: 922323662

Parameter	Units	922322482 Result	DUP Result	RPD	Footnotes
Toluene	ug/l	ND	ND	NC	
1,2,3-Trichlorobenzene	ug/l	ND	ND	NC	
1,2,4-Trichlorobenzene	ug/l	ND	ND	NC	
1,1,1-Trichloroethane	ug/l	ND	ND	NC	
1,1,2-Trichloroethane	ug/l	ND	ND	NC	
Trichloroethene	ug/l	ND	ND	NC	
Trichlorofluoromethane	ug/l	ND	ND	NC	
1,2,3-Trichloropropane	ug/l	ND	ND	NC	
1,2,4-Trimethylbenzene	ug/l	ND	ND	NC	
1,3,5-Trimethylbenzene	ug/l	ND	ND	NC	
Vinyl chloride	ug/l	ND	ND	NC	
m&p-Xylene	ug/l	ND	ND	NC	
o-Xylene	ug/l	ND	ND	NC	
Toluene-d8 (S)	%	86	87		
4-Bromofluorobenzene (S)	%	95	102		
Dibromofluoromethane (S)	%	88	84		
1,2-Dichloroethane-d4 (S)	%	86	82		

Laboratory Certification IDs
NC Wastewater 12
NC Drinking Water 37706
SC 99006

REPORT OF LABORATORY ANALYSIS
This report shall not be reproduced, except in full,
without the written consent of Pace Analytical Services, Inc.

Laboratory Certification IDs
LA Wastewater 04034
VA Drinking Water 213
FL NELAP E87627

Pace Analytical™
www.pacelabs.com

Pace Analytical Services, Inc.
9800 Kincey Avenue, Suite 100
Huntersville, NC 28078
Phone: 704.875.9092
Fax: 704.875.9091

QUALITY CONTROL DATA

Lab Project Number: 9233669
Client Project ID: Former Worth/NC101047.0002

QC Batch: 58782 Analysis Method: EPA 8260
QC Batch Method: EPA 8260 Analysis Description: GC/MS VOCs by 8260
Associated Lab Samples: 922322466 922322490 922322508

METHOD BLANK: 922323704
Associated Lab Samples: 922322466 922322490 922322508

Parameter	Units	Blank Result	Reporting Limit	Footnotes
Acetone	ug/l	ND	100	
Benzene	ug/l	ND	5.0	
Bromobenzene	ug/l	ND	5.0	
Bromochloromethane	ug/l	ND	5.0	
Bromodichloromethane	ug/l	ND	5.0	
Bromoform	ug/l	ND	5.0	
Bromomethane	ug/l	ND	10.	
2-Butanone (MEK)	ug/l	ND	100	
n-Butylbenzene	ug/l	ND	5.0	
sec-Butylbenzene	ug/l	ND	5.0	
tert-Butylbenzene	ug/l	ND	5.0	
Carbon disulfide	ug/l	ND	10.	
Carbon tetrachloride	ug/l	ND	5.0	
Chlorobenzene	ug/l	ND	5.0	
Chloroethane	ug/l	ND	10.	
Chloroform	ug/l	ND	5.0	
Chloromethane	ug/l	ND	10.	
2-Chlorotoluene	ug/l	ND	5.0	
4-Chlorotoluene	ug/l	ND	5.0	
1,2-Dibromo-3-chloropropane	ug/l	ND	5.0	
Dibromochloromethane	ug/l	ND	5.0	
1,2-Dibromoethane (EDB)	ug/l	ND	5.0	
Dibromomethane	ug/l	ND	5.0	
1,2-Dichlorobenzene	ug/l	ND	5.0	
1,3-Dichlorobenzene	ug/l	ND	5.0	
1,4-Dichlorobenzene	ug/l	ND	5.0	
Dichlorodifluoromethane	ug/l	ND	10.	
1,1-Dichloroethane	ug/l	ND	5.0	
1,2-Dichloroethane	ug/l	ND	5.0	
1,1-Dichloroethene	ug/l	ND	5.0	
cis-1,2-Dichloroethene	ug/l	ND	5.0	

Laboratory Certification IDs
NC Wastewater 12
NC Drinking Water 37706
SC 99006

REPORT OF LABORATORY ANALYSIS
This report shall not be reproduced, except in full,
without the written consent of Pace Analytical Services, Inc.

Laboratory Certification IDs
LA Wastewater 04034
VA Drinking Water 213
FL NELAP E87627

Pace Analytical™
www.pacelabs.com

Pace Analytical Services, Inc.
9800 Kincey Avenue, Suite 100
Huntersville, NC 28078
Phone: 704.875.9092
Fax: 704.875.9091

QUALITY CONTROL DATA

Lab Project Number: 9233669
Client Project ID: Former Worth/NC101047.0002

METHOD BLANK: 922323704
Associated Lab Samples: 922322466 922322490 922322508

Parameter	Units	Blank Result	Reporting Limit	Footnotes
trans-1,2-Dichloroethene	ug/l	ND	5.0	
1,2-Dichloropropane	ug/l	ND	5.0	
1,3-Dichloropropane	ug/l	ND	5.0	
2,2-Dichloropropane	ug/l	ND	5.0	
1,1-Dichloropropene	ug/l	ND	5.0	
Diisopropyl ether	ug/l	ND	5.0	
Ethylbenzene	ug/l	ND	5.0	
Hexachloro-1,3-butadiene	ug/l	ND	5.0	
Isopropylbenzene (Cumene)	ug/l	ND	5.0	
p-Isopropyltoluene	ug/l	ND	5.0	
Methylene chloride	ug/l	ND	5.0	
4-Methyl-2-pentanone (MIBK)	ug/l	ND	50.	
Methyl-tert-butyl ether	ug/l	ND	5.0	
Naphthalene	ug/l	ND	5.0	
n-Propylbenzene	ug/l	ND	5.0	
Styrene	ug/l	ND	5.0	
1,1,1,2-Tetrachloroethane	ug/l	ND	5.0	
1,1,2,2-Tetrachloroethane	ug/l	ND	5.0	
Tetrachloroethene	ug/l	ND	5.0	
Tetrahydrofuran	ug/l	ND	50.	
Toluene	ug/l	ND	5.0	
1,2,3-Trichlorobenzene	ug/l	ND	5.0	
1,2,4-Trichlorobenzene	ug/l	ND	5.0	
1,1,1-Trichloroethane	ug/l	ND	5.0	
1,1,2-Trichloroethane	ug/l	ND	5.0	
Trichloroethene	ug/l	ND	5.0	
Trichlorofluoromethane	ug/l	ND	10.	
1,2,3-Trichloropropane	ug/l	ND	5.0	
1,2,4-Trimethylbenzene	ug/l	ND	5.0	
1,3,5-Trimethylbenzene	ug/l	ND	5.0	
Vinyl chloride	ug/l	ND	10.	
m&p-Xylene	ug/l	ND	10.	
o-Xylene	ug/l	ND	5.0	
Toluene-d8 (S)	%	106		
4-Bromofluorobenzene (S)	%	92		
Dibromofluoromethane (S)	%	91		

Laboratory Certification IDs
NC Wastewater 12
NC Drinking Water 37706
SC 99006

REPORT OF LABORATORY ANALYSIS
This report shall not be reproduced, except in full,
without the written consent of Pace Analytical Services, Inc.

Laboratory Certification IDs
LA Wastewater 04034
VA Drinking Water 213
FL NELAP E87627

Pace Analytical™
www.pacelabs.com

Pace Analytical Services, Inc.
9800 Kincey Avenue, Suite 100
Huntersville, NC 28078
Phone: 704.875.9092
Fax: 704.875.9091

QUALITY CONTROL DATA

Lab Project Number: 9233669
Client Project ID: Former Worth/NC101047.0002

METHOD BLANK: 922323704
Associated Lab Samples: 922322466 922322490 922322508

Parameter	Units	Blank Result	Reporting Limit	Footnotes
1,2-Dichloroethane-d4 (S)	%	82		

LABORATORY CONTROL SAMPLE: 922323712

Parameter	Units	Spike Conc.	LCS Result	LCS % Rec	Footnotes
Acetone	ug/l	100.00	84.01	84	
Benzene	ug/l	50.00	59.11	118	
Bromobenzene	ug/l	50.00	56.24	112	
Bromochloromethane	ug/l	50.00	53.17	106	
Bromodichloromethane	ug/l	50.00	57.90	116	
Bromoform	ug/l	50.00	51.94	104	
Bromomethane	ug/l	50.00	116.9	234	1
2-Butanone (MEK)	ug/l	100.00	88.33	88	
n-Butylbenzene	ug/l	50.00	68.85	138	1
sec-Butylbenzene	ug/l	50.00	63.08	126	
tert-Butylbenzene	ug/l	50.00	60.47	121	
Carbon disulfide	ug/l	100.00	113.2	113	
Carbon tetrachloride	ug/l	50.00	62.62	125	
Chlorobenzene	ug/l	50.00	60.80	122	
Chloroethane	ug/l	50.00	47.55	95	
Chloroform	ug/l	50.00	54.26	109	
Chloromethane	ug/l	50.00	40.22	80	
2-Chlorotoluene	ug/l	50.00	58.38	117	
4-Chlorotoluene	ug/l	50.00	58.50	117	
1,2-Dibromo-3-chloropropane	ug/l	50.00	56.69	113	
Dibromochloromethane	ug/l	50.00	53.77	108	
1,2-Dibromoethane (EDB)	ug/l	50.00	62.78	126	1
Dibromomethane	ug/l	50.00	56.50	113	
1,2-Dichlorobenzene	ug/l	50.00	56.57	113	
1,3-Dichlorobenzene	ug/l	50.00	59.46	119	
1,4-Dichlorobenzene	ug/l	50.00	57.88	116	
Dichlorodifluoromethane	ug/l	50.00	54.97	110	
1,1-Dichloroethane	ug/l	50.00	55.40	111	
1,2-Dichloroethane	ug/l	50.00	54.07	108	

Laboratory Certification IDs
NC Wastewater 12
NC Drinking Water 37706
SC 99006

REPORT OF LABORATORY ANALYSIS
This report shall not be reproduced, except in full,
without the written consent of Pace Analytical Services, Inc.

Laboratory Certification IDs
LA Wastewater 04034
VA Drinking Water 213
FL NELAP E87627

Pace Analytical™
www.pacelabs.com

Pace Analytical Services, Inc.
9800 Kincey Avenue, Suite 100
Huntersville, NC 28078
Phone: 704.875.9092
Fax: 704.875.9091

QUALITY CONTROL DATA

Lab Project Number: 9233669
Client Project ID: Former Worth/NC101047.0002

LABORATORY CONTROL SAMPLE: 922323712

Parameter	Units	Spike Conc.	LCS Result	LCS % Rec	Footnotes
1,1-Dichloroethene	ug/l	50.00	62.56	125	
cis-1,2-Dichloroethene	ug/l	50.00	55.77	112	
trans-1,2-Dichloroethene	ug/l	50.00	60.40	121	
1,2-Dichloropropane	ug/l	50.00	60.43	121	
1,3-Dichloropropane	ug/l	50.00	62.27	125	
2,2-Dichloropropane	ug/l	50.00	54.01	108	
1,1-Dichloropropene	ug/l	50.00	66.13	132	
Diisopropyl ether	ug/l	50.00	52.44	105	
Ethylbenzene	ug/l	50.00	62.14	124	
Hexachloro-1,3-butadiene	ug/l	50.00	68.04	136	
Isopropylbenzene (Cumene)	ug/l	50.00	61.94	124	
p-Isopropyltoluene	ug/l	50.00	63.99	128	
Methylene chloride	ug/l	50.00	52.89	106	
4-Methyl-2-pentanone (MIBK)	ug/l	100.00	107.3	107	
Methyl-tert-butyl ether	ug/l	50.00	51.48	103	
Naphthalene	ug/l	50.00	60.90	122	
n-Propylbenzene	ug/l	50.00	62.39	125	
Styrene	ug/l	50.00	62.17	124	
1,1,1,2-Tetrachloroethane	ug/l	50.00	65.48	131	1
1,1,2,2-Tetrachloroethane	ug/l	50.00	58.96	118	
Tetrachloroethene	ug/l	50.00	65.88	132	
Tetrahydrofuran	ug/l	500.00	461.0	92	
Toluene	ug/l	50.00	57.16	114	
1,2,3-Trichlorobenzene	ug/l	50.00	59.25	118	
1,2,4-Trichlorobenzene	ug/l	50.00	61.38	123	
1,1,1-Trichloroethane	ug/l	50.00	59.78	120	
1,1,2-Trichloroethane	ug/l	50.00	59.26	119	
Trichloroethene	ug/l	50.00	64.74	129	
Trichlorofluoromethane	ug/l	50.00	49.18	98	
1,2,3-Trichloropropane	ug/l	50.00	63.25	126	1
1,2,4-Trimethylbenzene	ug/l	50.00	61.13	122	
1,3,5-Trimethylbenzene	ug/l	50.00	59.88	120	
Vinyl chloride	ug/l	50.00	45.84	92	
m&p-Xylene	ug/l	100.00	125.5	125	
o-Xylene	ug/l	50.00	60.94	122	
Toluene-d8 (S)				100	
4-Bromofluorobenzene (S)				104	

Laboratory Certification IDs
NC Wastewater 12
NC Drinking Water 37706
SC 99006

REPORT OF LABORATORY ANALYSIS

This report shall not be reproduced, except in full,
without the written consent of Pace Analytical Services, Inc.

Laboratory Certification IDs
LA Wastewater 04034
VA Drinking Water 213
FL NELAP E87627

Pace Analytical™
www.pacelabs.com

Pace Analytical Services, Inc.
9800 Kincey Avenue, Suite 100
Huntersville, NC 28078
Phone: 704.875.9092
Fax: 704.875.9091

QUALITY CONTROL DATA

Lab Project Number: 9233669
Client Project ID: Former Worth/NC101047.0002

LABORATORY CONTROL SAMPLE: 922323712

Parameter	Units	Spike Conc.	LCS Result	LCS % Rec	Footnotes
Dibromofluoromethane (S)				93	
1,2-Dichloroethane-d4 (S)				87	

MATRIX SPIKE & MATRIX SPIKE DUPLICATE: 922323738 922323746

Parameter	Units	922320254 Result	Spike Conc.	MS Result	MSD Result	MS % Rec	MSD % Rec	RPD	Footnotes
Benzene	ug/l	0	50.00	51.40	52.63	103	105	2	
Chlorobenzene	ug/l	0	50.00	51.91	53.14	104	106	2	
1,1-Dichloroethene	ug/l	0	50.00	54.67	55.31	109	111	1	
Toluene	ug/l	0	50.00	48.73	50.46	98	101	3	
Trichloroethene	ug/l	4.005	50.00	58.14	61.39	108	115	5	
Toluene-d8 (S)						97	101		
4-Bromofluorobenzene (S)						99	101		
Dibromofluoromethane (S)						95	92		
1,2-Dichloroethane-d4 (S)						92	88		

SAMPLE DUPLICATE: 922323720

Parameter	Units	922318480 Result	DUP Result	RPD	Footnotes
Acetone	ug/l	ND	ND	NC	
Benzene	ug/l	ND	ND	NC	
Bromobenzene	ug/l	ND	ND	NC	
Bromochloromethane	ug/l	ND	ND	NC	
Bromodichloromethane	ug/l	ND	ND	NC	
Bromoform	ug/l	ND	ND	NC	
Bromomethane	ug/l	ND	ND	NC	
2-Butanone (MEK)	ug/l	ND	ND	NC	
n-Butylbenzene	ug/l	ND	ND	NC	
sec-Butylbenzene	ug/l	ND	ND	NC	
tert-Butylbenzene	ug/l	ND	ND	NC	
Carbon disulfide	ug/l	ND	ND	NC	
Carbon tetrachloride	ug/l	ND	ND	NC	
Chlorobenzene	ug/l	ND	ND	NC	

Laboratory Certification IDs
NC Wastewater 12
NC Drinking Water 37706
SC 99006

REPORT OF LABORATORY ANALYSIS
This report shall not be reproduced, except in full,
without the written consent of Pace Analytical Services, Inc.

Laboratory Certification IDs
LA Wastewater 04034
VA Drinking Water 213
FL NELAP E87627

Pace Analytical™
www.pacelabs.com

Pace Analytical Services, Inc.
9800 Kincey Avenue, Suite 100
Huntersville, NC 28078
Phone: 704.875.9092
Fax: 704.875.9091

QUALITY CONTROL DATA

Lab Project Number: 9233669
Client Project ID: Former Worth/NC101047.0002

SAMPLE DUPLICATE: 922323720

Parameter	Units	922318480 Result	DUP Result	RPD	Footnotes
Chloroethane	ug/l	ND	ND	NC	
Chloroform	ug/l	ND	ND	NC	
Chloromethane	ug/l	ND	ND	NC	
2-Chlorotoluene	ug/l	ND	ND	NC	
4-Chlorotoluene	ug/l	ND	ND	NC	
1,2-Dibromo-3-chloropropane	ug/l	ND	ND	NC	
Dibromochloromethane	ug/l	ND	ND	NC	
1,2-Dibromoethane (EDB)	ug/l	ND	ND	NC	
Dibromomethane	ug/l	ND	ND	NC	
1,2-Dichlorobenzene	ug/l	ND	ND	NC	
1,3-Dichlorobenzene	ug/l	ND	ND	NC	
1,4-Dichlorobenzene	ug/l	ND	ND	NC	
Dichlorodifluoromethane	ug/l	ND	ND	NC	
1,1-Dichloroethane	ug/l	46.00	46.00	0	
1,2-Dichloroethane	ug/l	ND	ND	NC	
1,1-Dichloroethene	ug/l	28.00	27.00	3	
cis-1,2-Dichloroethene	ug/l	ND	ND	NC	
trans-1,2-Dichloroethene	ug/l	ND	ND	NC	
1,2-Dichloropropane	ug/l	ND	ND	NC	
1,3-Dichloropropane	ug/l	ND	ND	NC	
2,2-Dichloropropane	ug/l	ND	ND	NC	
1,1-Dichloropropene	ug/l	ND	ND	NC	
Diisopropyl ether	ug/l	ND	ND	NC	
Ethylbenzene	ug/l	ND	ND	NC	
Hexachloro-1,3-butadiene	ug/l	ND	ND	NC	
Isopropylbenzene (Cumene)	ug/l	ND	ND	NC	
p-Isopropyltoluene	ug/l	ND	ND	NC	
Methylene chloride	ug/l	ND	ND	NC	
4-Methyl-2-pentanone (MIBK)	ug/l	ND	ND	NC	
Methyl-tert-butyl ether	ug/l	ND	ND	NC	
Naphthalene	ug/l	ND	ND	NC	
n-Propylbenzene	ug/l	ND	ND	NC	
Styrene	ug/l	ND	ND	NC	
1,1,1,2-Tetrachloroethane	ug/l	ND	ND	NC	
1,1,2,2-Tetrachloroethane	ug/l	ND	ND	NC	
Tetrachloroethene	ug/l	ND	ND	NC	
Tetrahydrofuran	ug/l	ND	ND	NC	

Laboratory Certification IDs
NC Wastewater 12
NC Drinking Water 37706
SC 99006

REPORT OF LABORATORY ANALYSIS
This report shall not be reproduced, except in full,
without the written consent of Pace Analytical Services, Inc.

Laboratory Certification IDs
LA Wastewater 04034
VA Drinking Water 213
FL NELAP E87627

Pace Analytical™
www.pacelabs.com

Pace Analytical Services, Inc.
9800 Kincey Avenue, Suite 100
Huntersville, NC 28078
Phone: 704.875.9092
Fax: 704.875.9091

QUALITY CONTROL DATA

Lab Project Number: 9233669
Client Project ID: Former Worth/NC101047.0002

SAMPLE DUPLICATE: 922323720

Parameter	Units	922318480 Result	DUP Result	RPD	Footnotes
Toluene	ug/l	ND	ND	NC	
1,2,3-Trichlorobenzene	ug/l	ND	ND	NC	
1,2,4-Trichlorobenzene	ug/l	ND	ND	NC	
1,1,1-Trichloroethane	ug/l	36.00	34.00	5	
1,1,2-Trichloroethane	ug/l	ND	ND	NC	
Trichloroethene	ug/l	ND	ND	NC	
Trichlorofluoromethane	ug/l	ND	ND	NC	
1,2,3-Trichloropropane	ug/l	ND	ND	NC	
1,2,4-Trimethylbenzene	ug/l	ND	ND	NC	
1,3,5-Trimethylbenzene	ug/l	ND	ND	NC	
Vinyl chloride	ug/l	ND	ND	NC	
m&p-Xylene	ug/l	ND	ND	NC	
o-Xylene	ug/l	ND	ND	NC	
Toluene-d8 (S)	%	103	98		
4-Bromofluorobenzene (S)	%	98	96		
Dibromofluoromethane (S)	%	97	100		
1,2-Dichloroethane-d4 (S)	%	88	92		

Laboratory Certification IDs
NC Wastewater 12
NC Drinking Water 37706
SC 99006

REPORT OF LABORATORY ANALYSIS
This report shall not be reproduced, except in full,
without the written consent of Pace Analytical Services, Inc.

Laboratory Certification IDs
LA Wastewater 04034
VA Drinking Water 213
FL NELAP E87627

Pace Analytical™
www.pacelabs.com

Pace Analytical Services, Inc.
9800 Kincey Avenue, Suite 100
Huntersville, NC 28078
Phone: 704.875.9092
Fax: 704.875.9091

QUALITY CONTROL DATA

Lab Project Number: 9233669
Client Project ID: Former Worth/NC101047.0002

QC Batch: 58892 Analysis Method: EPA 8260
QC Batch Method: EPA 8260 Analysis Description: GC/MS VOCs by 8260
Associated Lab Samples: 922322441 922322573 922322581

METHOD BLANK: 922329198
Associated Lab Samples: 922322441 922322573 922322581

Parameter	Units	Blank Result	Reporting Limit	Footnotes
Acetone	ug/l	ND	100	
Benzene	ug/l	ND	5.0	
Bromobenzene	ug/l	ND	5.0	
Bromochloromethane	ug/l	ND	5.0	
Bromodichloromethane	ug/l	ND	5.0	
Bromoform	ug/l	ND	5.0	
Bromomethane	ug/l	ND	10.	
2-Butanone (MEK)	ug/l	ND	100	
n-Butylbenzene	ug/l	ND	5.0	
sec-Butylbenzene	ug/l	ND	5.0	
tert-Butylbenzene	ug/l	ND	5.0	
Carbon disulfide	ug/l	ND	10.	
Carbon tetrachloride	ug/l	ND	5.0	
Chlorobenzene	ug/l	ND	5.0	
Chloroethane	ug/l	ND	10.	
Chloroform	ug/l	ND	5.0	
Chloromethane	ug/l	ND	10.	
2-Chlorotoluene	ug/l	ND	5.0	
4-Chlorotoluene	ug/l	ND	5.0	
1,2-Dibromo-3-chloropropane	ug/l	ND	5.0	
Dibromochloromethane	ug/l	ND	5.0	
1,2-Dibromoethane (EDB)	ug/l	ND	5.0	
Dibromomethane	ug/l	ND	5.0	
1,2-Dichlorobenzene	ug/l	ND	5.0	
1,3-Dichlorobenzene	ug/l	ND	5.0	
1,4-Dichlorobenzene	ug/l	ND	5.0	
Dichlorodifluoromethane	ug/l	ND	10.	
1,1-Dichloroethane	ug/l	ND	5.0	
1,2-Dichloroethane	ug/l	ND	5.0	
1,1-Dichloroethene	ug/l	ND	5.0	
cis-1,2-Dichloroethene	ug/l	ND	5.0	

Laboratory Certification IDs
NC Wastewater 12
NC Drinking Water 37706
SC 99006

REPORT OF LABORATORY ANALYSIS
This report shall not be reproduced, except in full,
without the written consent of Pace Analytical Services, Inc.

Laboratory Certification IDs
LA Wastewater 04034
VA Drinking Water 213
FL NELAP E87627

Pace Analytical™
www.pacelabs.com

Pace Analytical Services, Inc.
9800 Kincey Avenue, Suite 100
Huntersville, NC 28078
Phone: 704.875.9092
Fax: 704.875.9091

QUALITY CONTROL DATA

Lab Project Number: 9233669
Client Project ID: Former Worth/NC101047.0002

METHOD BLANK: 922329198
Associated Lab Samples: 922322441 922322573 922322581

Parameter	Units	Blank Result	Reporting Limit	Footnotes
trans-1,2-Dichloroethene	ug/l	ND	5.0	
1,2-Dichloropropane	ug/l	ND	5.0	
1,3-Dichloropropane	ug/l	ND	5.0	
2,2-Dichloropropane	ug/l	ND	5.0	
1,1-Dichloropropene	ug/l	ND	5.0	
Diisopropyl ether	ug/l	ND	5.0	
Ethylbenzene	ug/l	ND	5.0	
Hexachloro-1,3-butadiene	ug/l	ND	5.0	
Isopropylbenzene (Cumene)	ug/l	ND	5.0	
p-Isopropyltoluene	ug/l	ND	5.0	
Methylene chloride	ug/l	ND	5.0	
4-Methyl-2-pentanone (MIBK)	ug/l	ND	50.	
Methyl-tert-butyl ether	ug/l	ND	5.0	
Naphthalene	ug/l	ND	5.0	
n-Propylbenzene	ug/l	ND	5.0	
Styrene	ug/l	ND	5.0	
1,1,1,2-Tetrachloroethane	ug/l	ND	5.0	
1,1,2,2-Tetrachloroethane	ug/l	ND	5.0	
Tetrachloroethene	ug/l	ND	5.0	
Tetrahydrofuran	ug/l	ND	50.	
Toluene	ug/l	ND	5.0	
1,2,3-Trichlorobenzene	ug/l	ND	5.0	
1,2,4-Trichlorobenzene	ug/l	ND	5.0	
1,1,1-Trichloroethane	ug/l	ND	5.0	
1,1,2-Trichloroethane	ug/l	ND	5.0	
Trichloroethene	ug/l	ND	5.0	
Trichlorofluoromethane	ug/l	ND	10.	
1,2,3-Trichloropropane	ug/l	ND	5.0	
1,2,4-Trimethylbenzene	ug/l	ND	5.0	
1,3,5-Trimethylbenzene	ug/l	ND	5.0	
Vinyl chloride	ug/l	ND	10.	
m&p-Xylene	ug/l	ND	10.	
o-Xylene	ug/l	ND	5.0	
Toluene-d8 (S)	%	103		
4-Bromofluorobenzene (S)	%	94		
Dibromofluoromethane (S)	%	87		

Laboratory Certification IDs
NC Wastewater 12
NC Drinking Water 37706
SC 99006

REPORT OF LABORATORY ANALYSIS
This report shall not be reproduced, except in full,
without the written consent of Pace Analytical Services, Inc.

Laboratory Certification IDs
LA Wastewater 04034
VA Drinking Water 213
FL NELAP E87627

Pace Analytical™
www.pacelabs.com

Pace Analytical Services, Inc.
9800 Kincey Avenue, Suite 100
Huntersville, NC 28078
Phone: 704.875.9092
Fax: 704.875.9091

QUALITY CONTROL DATA

Lab Project Number: 9233669
Client Project ID: Former Worth/NC101047.0002

METHOD BLANK: 922329198
Associated Lab Samples: 922322441 922322573 922322581

Parameter	Units	Blank Result	Reporting Limit	Footnotes
1,2-Dichloroethane-d4 (S)	%	81		

LABORATORY CONTROL SAMPLE: 922329206

Parameter	Units	Spike Conc.	LCS Result	LCS % Rec	Footnotes
Acetone	ug/l	100.00	73.35	73	
Benzene	ug/l	50.00	47.89	96	
Bromobenzene	ug/l	50.00	46.56	93	
Bromochloromethane	ug/l	50.00	41.58	83	
Bromodichloromethane	ug/l	50.00	46.28	93	
Bromoform	ug/l	50.00	42.34	85	
Bromomethane	ug/l	50.00	82.48	165	1
2-Butanone (MEK)	ug/l	100.00	71.95	72	
n-Butylbenzene	ug/l	50.00	54.94	110	
sec-Butylbenzene	ug/l	50.00	49.49	99	
tert-Butylbenzene	ug/l	50.00	47.37	95	
Carbon disulfide	ug/l	100.00	88.12	88	
Carbon tetrachloride	ug/l	50.00	51.16	102	
Chlorobenzene	ug/l	50.00	48.28	97	
Chloroethane	ug/l	50.00	36.95	74	
Chloroform	ug/l	50.00	42.96	86	
Chloromethane	ug/l	50.00	27.93	56	
2-Chlorotoluene	ug/l	50.00	45.65	91	
4-Chlorotoluene	ug/l	50.00	46.29	93	
1,2-Dibromo-3-chloropropane	ug/l	50.00	44.90	90	
Dibromochloromethane	ug/l	50.00	43.65	87	
1,2-Dibromoethane (EDB)	ug/l	50.00	49.95	100	
Dibromomethane	ug/l	50.00	45.36	91	
1,2-Dichlorobenzene	ug/l	50.00	45.47	91	
1,3-Dichlorobenzene	ug/l	50.00	46.50	93	
1,4-Dichlorobenzene	ug/l	50.00	45.11	90	
Dichlorodifluoromethane	ug/l	50.00	41.30	83	
1,1-Dichloroethane	ug/l	50.00	43.88	88	
1,2-Dichloroethane	ug/l	50.00	42.30	85	

Laboratory Certification IDs
NC Wastewater 12
NC Drinking Water 37706
SC 99006

REPORT OF LABORATORY ANALYSIS
This report shall not be reproduced, except in full,
without the written consent of Pace Analytical Services, Inc.

Laboratory Certification IDs
LA Wastewater 04034
VA Drinking Water 213
FL NELAP E87627

Pace Analytical™
www.pacelabs.com

Pace Analytical Services, Inc.
9800 Kincey Avenue, Suite 100
Huntersville, NC 28078
Phone: 704.875.9092
Fax: 704.875.9091

QUALITY CONTROL DATA

Lab Project Number: 9233669
Client Project ID: Former Worth/NC101047.0002

LABORATORY CONTROL SAMPLE: 922329206

Parameter	Units	Spike Conc.	LCS Result	LCS % Rec	Footnotes
1,1-Dichloroethene	ug/l	50.00	48.88	98	
cis-1,2-Dichloroethene	ug/l	50.00	45.65	91	
trans-1,2-Dichloroethene	ug/l	50.00	48.87	98	
1,2-Dichloropropane	ug/l	50.00	47.53	95	
1,3-Dichloropropane	ug/l	50.00	51.74	103	
2,2-Dichloropropane	ug/l	50.00	55.11	110	
1,1-Dichloropropene	ug/l	50.00	51.81	104	
Diisopropyl ether	ug/l	50.00	40.90	82	
Ethylbenzene	ug/l	50.00	49.85	100	
Hexachloro-1,3-butadiene	ug/l	50.00	53.17	106	
Isopropylbenzene (Cumene)	ug/l	50.00	48.96	98	
p-Isopropyltoluene	ug/l	50.00	51.19	102	
Methylene chloride	ug/l	50.00	40.09	80	
4-Methyl-2-pentanone (MIBK)	ug/l	100.00	84.64	85	
Methyl-tert-butyl ether	ug/l	50.00	40.83	82	
Naphthalene	ug/l	50.00	46.24	92	
n-Propylbenzene	ug/l	50.00	49.13	98	
Styrene	ug/l	50.00	47.91	96	
1,1,1,2-Tetrachloroethane	ug/l	50.00	50.85	102	
1,1,2,2-Tetrachloroethane	ug/l	50.00	48.12	96	
Tetrachloroethene	ug/l	50.00	55.11	110	
Tetrahydrofuran	ug/l	500.00	361.8	72	
Toluene	ug/l	50.00	45.44	91	
1,2,3-Trichlorobenzene	ug/l	50.00	45.36	91	
1,2,4-Trichlorobenzene	ug/l	50.00	47.66	95	
1,1,1-Trichloroethane	ug/l	50.00	46.50	93	
1,1,2-Trichloroethane	ug/l	50.00	46.26	92	
Trichloroethene	ug/l	50.00	53.53	107	
Trichlorofluoromethane	ug/l	50.00	38.79	78	
1,2,3-Trichloropropane	ug/l	50.00	51.77	104	
1,2,4-Trimethylbenzene	ug/l	50.00	48.24	96	
1,3,5-Trimethylbenzene	ug/l	50.00	48.36	97	
Vinyl chloride	ug/l	50.00	35.00	70	
m&p-Xylene	ug/l	100.00	98.65	99	
o-Xylene	ug/l	50.00	47.04	94	
Toluene-d8 (S)				96	
4-Bromofluorobenzene (S)				103	

Laboratory Certification IDs
NC Wastewater 12
NC Drinking Water 37706
SC 99006

REPORT OF LABORATORY ANALYSIS
This report shall not be reproduced, except in full,
without the written consent of Pace Analytical Services, Inc.

Laboratory Certification IDs
LA Wastewater 04034
VA Drinking Water 213
FL NELAP E87627

Pace Analytical™
www.pacelabs.com

Pace Analytical Services, Inc.
9800 Kincey Avenue, Suite 100
Huntersville, NC 28078
Phone: 704.875.9092
Fax: 704.875.9091

QUALITY CONTROL DATA

Lab Project Number: 9233669
Client Project ID: Former Worth/NC101047.0002

LABORATORY CONTROL SAMPLE: 922329206

Parameter	Units	Spike Conc.	LCS Result	LCS % Rec	Footnotes
Dibromofluoromethane (S)				92	
1,2-Dichloroethane-d4 (S)				86	

MATRIX SPIKE: 922329222

Parameter	Units	922322441 Result	Spike Conc.	MS Result	MS % Rec	Footnotes
Benzene	ug/l	22.85	50.00	109.5	173	2
Chlorobenzene	ug/l	0	50.00	72.55	145	2
1,1-Dichloroethene	ug/l	1312	50.00	1991	1359	3
Toluene	ug/l	23.50	50.00	89.59	132	2
Trichloroethene	ug/l	64170	50.00	12760	0	3
Toluene-d8 (S)					85	
4-Bromofluorobenzene (S)					107	
Dibromofluoromethane (S)					99	
1,2-Dichloroethane-d4 (S)					83	

SAMPLE DUPLICATE: 922329214

Parameter	Units	922321690 Result	DUP Result	RPD	Footnotes
Acetone	ug/l	ND	ND	NC	
Benzene	ug/l	ND	ND	NC	
Bromobenzene	ug/l	ND	ND	NC	
Bromochloromethane	ug/l	ND	ND	NC	
Bromodichloromethane	ug/l	ND	ND	NC	
Bromoform	ug/l	ND	ND	NC	
Bromomethane	ug/l	ND	ND	NC	
2-Butanone (MEK)	ug/l	ND	ND	NC	
n-Butylbenzene	ug/l	ND	ND	NC	
sec-Butylbenzene	ug/l	ND	ND	NC	
tert-Butylbenzene	ug/l	ND	ND	NC	
Carbon disulfide	ug/l	ND	ND	NC	
Carbon tetrachloride	ug/l	ND	ND	NC	
Chlorobenzene	ug/l	ND	ND	NC	

Laboratory Certification IDs
NC Wastewater 12
NC Drinking Water 37706
SC 99006

REPORT OF LABORATORY ANALYSIS
This report shall not be reproduced, except in full,
without the written consent of Pace Analytical Services, Inc.

Laboratory Certification IDs
LA Wastewater 04034
VA Drinking Water 213
FL NELAP E87627

Pace Analytical™
www.pacelabs.com

Pace Analytical Services, Inc.
9800 Kincey Avenue, Suite 100
Huntersville, NC 28078
Phone: 704.875.9092
Fax: 704.875.9091

QUALITY CONTROL DATA

Lab Project Number: 9233669
Client Project ID: Former Worth/NC101047.0002

SAMPLE DUPLICATE: 922329214

Parameter	Units	922321690 Result	DUP Result	RPD	Footnotes
Chloroethane	ug/l	ND	ND	NC	
Chloroform	ug/l	ND	ND	NC	
Chloromethane	ug/l	ND	ND	NC	
2-Chlorotoluene	ug/l	ND	ND	NC	
4-Chlorotoluene	ug/l	ND	ND	NC	
1,2-Dibromo-3-chloropropane	ug/l	ND	ND	NC	
Dibromochloromethane	ug/l	ND	ND	NC	
1,2-Dibromoethane (EDB)	ug/l	ND	ND	NC	
Dibromomethane	ug/l	ND	ND	NC	
1,2-Dichlorobenzene	ug/l	ND	ND	NC	
1,3-Dichlorobenzene	ug/l	ND	ND	NC	
1,4-Dichlorobenzene	ug/l	ND	ND	NC	
Dichlorodifluoromethane	ug/l	ND	ND	NC	
1,1-Dichloroethane	ug/l	ND	ND	NC	
1,2-Dichloroethane	ug/l	ND	ND	NC	
1,1-Dichloroethene	ug/l	ND	ND	NC	
cis-1,2-Dichloroethene	ug/l	ND	ND	NC	
trans-1,2-Dichloroethene	ug/l	ND	ND	NC	
1,2-Dichloropropane	ug/l	ND	ND	NC	
1,3-Dichloropropane	ug/l	ND	ND	NC	
2,2-Dichloropropane	ug/l	ND	ND	NC	
1,1-Dichloropropene	ug/l	ND	ND	NC	
Diisopropyl ether	ug/l	ND	ND	NC	
Ethylbenzene	ug/l	ND	ND	NC	
Hexachloro-1,3-butadiene	ug/l	ND	ND	NC	
Isopropylbenzene (Cumene)	ug/l	ND	ND	NC	
p-Isopropyltoluene	ug/l	ND	ND	NC	
Methylene chloride	ug/l	ND	ND	NC	
4-Methyl-2-pentanone (MIBK)	ug/l	ND	ND	NC	
Methyl-tert-butyl ether	ug/l	ND	ND	NC	
Naphthalene	ug/l	ND	ND	NC	
n-Propylbenzene	ug/l	ND	ND	NC	
Styrene	ug/l	ND	ND	NC	
1,1,1,2-Tetrachloroethane	ug/l	ND	ND	NC	
1,1,2,2-Tetrachloroethane	ug/l	ND	ND	NC	
Tetrachloroethene	ug/l	ND	ND	NC	
Tetrahydrofuran	ug/l	ND	ND	NC	

Laboratory Certification IDs
NC Wastewater 12
NC Drinking Water 37706
SC 99006

REPORT OF LABORATORY ANALYSIS
This report shall not be reproduced, except in full,
without the written consent of Pace Analytical Services, Inc.

Laboratory Certification IDs
LA Wastewater 04034
VA Drinking Water 213
FL NELAP E87627

Pace Analytical™
www.pacelabs.com

Pace Analytical Services, Inc.
9800 Kincey Avenue, Suite 100
Huntersville, NC 28078
Phone: 704.875.9092
Fax: 704.875.9091

QUALITY CONTROL DATA

Lab Project Number: 9233669
Client Project ID: Former Worth/NC101047.0002

SAMPLE DUPLICATE: 922329214

Parameter	Units	922321690 Result	DUP Result	RPD	Footnotes
Toluene	ug/l	ND	ND	NC	
1,2,3-Trichlorobenzene	ug/l	ND	ND	NC	
1,2,4-Trichlorobenzene	ug/l	ND	ND	NC	
1,1,1-Trichloroethane	ug/l	ND	ND	NC	
1,1,2-Trichloroethane	ug/l	ND	ND	NC	
Trichloroethene	ug/l	ND	ND	NC	
Trichlorofluoromethane	ug/l	ND	ND	NC	
1,2,3-Trichloropropane	ug/l	ND	ND	NC	
1,2,4-Trimethylbenzene	ug/l	ND	ND	NC	
1,3,5-Trimethylbenzene	ug/l	ND	ND	NC	
Vinyl chloride	ug/l	ND	ND	NC	
m&p-Xylene	ug/l	ND	ND	NC	
o-Xylene	ug/l	ND	ND	NC	
Toluene-d8 (S)	%	95	95		
4-Bromofluorobenzene (S)	%	100	98		
Dibromofluoromethane (S)	%	88	90		
1,2-Dichloroethane-d4 (S)	%	84	86		

Laboratory Certification IDs
NC Wastewater 12
NC Drinking Water 37706
SC 99006

REPORT OF LABORATORY ANALYSIS
This report shall not be reproduced, except in full,
without the written consent of Pace Analytical Services, Inc.

Laboratory Certification IDs
LA Wastewater 04034
VA Drinking Water 213
FL NELAP E87627

Pace Analytical™
www.pacelabs.com

Pace Analytical Services, Inc.
9800 Kincey Avenue, Suite 100
Huntersville, NC 28078
Phone: 704.875.9092
Fax: 704.875.9091

QUALITY CONTROL DATA

Lab Project Number: 9233669
Client Project ID: Former Worth/NC101047.0002

QC Batch: 58911 — Analysis Method: EPA 8260
QC Batch Method: EPA 8260 — Analysis Description: GC/MS VOCs by 8260
Associated Lab Samples: 922322417 922322425 922322433 922322458 922322474

METHOD BLANK: 922329867
Associated Lab Samples: 922322417 922322425 922322433 922322458 922322474

Parameter	Units	Blank Result	Reporting Limit	Footnotes
Acetone	ug/l	ND	100	
Benzene	ug/l	ND	5.0	
Bromobenzene	ug/l	ND	5.0	
Bromochloromethane	ug/l	ND	5.0	
Bromodichloromethane	ug/l	ND	5.0	
Bromoform	ug/l	ND	5.0	
Bromomethane	ug/l	ND	10.	
2-Butanone (MEK)	ug/l	ND	100	
n-Butylbenzene	ug/l	ND	5.0	
sec-Butylbenzene	ug/l	ND	5.0	
tert-Butylbenzene	ug/l	ND	5.0	
Carbon disulfide	ug/l	ND	10.	
Carbon tetrachloride	ug/l	ND	5.0	
Chlorobenzene	ug/l	ND	5.0	
Chloroethane	ug/l	ND	10.	
Chloroform	ug/l	ND	5.0	
Chloromethane	ug/l	ND	10.	
2-Chlorotoluene	ug/l	ND	5.0	
4-Chlorotoluene	ug/l	ND	5.0	
1,2-Dibromo-3-chloropropane	ug/l	ND	5.0	
Dibromochloromethane	ug/l	ND	5.0	
1,2-Dibromoethane (EDB)	ug/l	ND	5.0	
Dibromomethane	ug/l	ND	5.0	
1,2-Dichlorobenzene	ug/l	ND	5.0	
1,3-Dichlorobenzene	ug/l	ND	5.0	
1,4-Dichlorobenzene	ug/l	ND	5.0	
Dichlorodifluoromethane	ug/l	ND	10.	
1,1-Dichloroethane	ug/l	ND	5.0	
1,2-Dichloroethane	ug/l	ND	5.0	
1,1-Dichloroethene	ug/l	ND	5.0	
cis-1,2-Dichloroethene	ug/l	ND	5.0	

Laboratory Certification IDs
NC Wastewater 12
NC Drinking Water 37706
SC 99006

REPORT OF LABORATORY ANALYSIS
This report shall not be reproduced, except in full,
without the written consent of Pace Analytical Services, Inc.

Laboratory Certification IDs
LA Wastewater 04034
VA Drinking Water 213
FL NELAP E87627

Pace Analytical™
www.pacelabs.com

Pace Analytical Services, Inc.
9800 Kincey Avenue, Suite 100
Huntersville, NC 28078
Phone: 704.875.9092
Fax: 704.875.9091

QUALITY CONTROL DATA

Lab Project Number: 9233669
Client Project ID: Former Worth/NC101047.0002

METHOD BLANK: 922329867
Associated Lab Samples: 922322417 922322425 922322433 922322458 922322474

Parameter	Units	Blank Result	Reporting Limit	Footnotes
trans-1,2-Dichloroethene	ug/l	ND	5.0	
1,2-Dichloropropane	ug/l	ND	5.0	
1,3-Dichloropropane	ug/l	ND	5.0	
2,2-Dichloropropane	ug/l	ND	5.0	
1,1-Dichloropropene	ug/l	ND	5.0	
Diisopropyl ether	ug/l	ND	5.0	
Ethylbenzene	ug/l	ND	5.0	
Hexachloro-1,3-butadiene	ug/l	ND	5.0	
Isopropylbenzene (Cumene)	ug/l	ND	5.0	
p-Isopropyltoluene	ug/l	ND	5.0	
Methylene chloride	ug/l	ND	5.0	
4-Methyl-2-pentanone (MIBK)	ug/l	ND	50.	
Methyl-tert-butyl ether	ug/l	ND	5.0	
Naphthalene	ug/l	ND	5.0	
n-Propylbenzene	ug/l	ND	5.0	
Styrene	ug/l	ND	5.0	
1,1,1,2-Tetrachloroethane	ug/l	ND	5.0	
1,1,2,2-Tetrachloroethane	ug/l	ND	5.0	
Tetrachloroethene	ug/l	ND	5.0	
Tetrahydrofuran	ug/l	ND	50.	
Toluene	ug/l	ND	5.0	
1,2,3-Trichlorobenzene	ug/l	ND	5.0	
1,2,4-Trichlorobenzene	ug/l	ND	5.0	
1,1,1-Trichloroethane	ug/l	ND	5.0	
1,1,2-Trichloroethane	ug/l	ND	5.0	
Trichloroethene	ug/l	ND	5.0	
Trichlorofluoromethane	ug/l	ND	10.	
1,2,3-Trichloropropane	ug/l	ND	5.0	
1,2,4-Trimethylbenzene	ug/l	ND	5.0	
1,3,5-Trimethylbenzene	ug/l	ND	5.0	
Vinyl chloride	ug/l	ND	10.	
m&p-Xylene	ug/l	ND	10.	
o-Xylene	ug/l	ND	5.0	
Toluene-d8 (S)	%	106		
4-Bromofluorobenzene (S)	%	98		
Dibromofluoromethane (S)	%	92		

Laboratory Certification IDs
NC Wastewater 12
NC Drinking Water 37706
SC 99006

REPORT OF LABORATORY ANALYSIS
This report shall not be reproduced, except in full,
without the written consent of Pace Analytical Services, Inc.

Laboratory Certification IDs
LA Wastewater 04034
VA Drinking Water 213
FL NELAP E87627

Pace Analytical™
www.pacelabs.com

Pace Analytical Services, Inc.
9800 Kincey Avenue, Suite 100
Huntersville, NC 28078
Phone: 704.875.9092
Fax: 704.875.9091

QUALITY CONTROL DATA

Lab Project Number: 9233669
Client Project ID: Former Worth/NC101047.0002

METHOD BLANK: 922329867
Associated Lab Samples: 922322417 922322425 922322433 922322458 922322474

Parameter	Units	Blank Result	Reporting Limit	Footnotes
1,2-Dichloroethane-d4 (S)	%	94		

LABORATORY CONTROL SAMPLE: 922329875

Parameter	Units	Spike Conc.	LCS Result	LCS % Rec	Footnotes
Acetone	ug/l	100.00	84.25	84	
Benzene	ug/l	50.00	50.85	102	
Bromobenzene	ug/l	50.00	47.12	94	
Bromochloromethane	ug/l	50.00	45.21	90	
Bromodichloromethane	ug/l	50.00	47.21	94	
Bromoform	ug/l	50.00	44.92	90	
Bromomethane	ug/l	50.00	157.1	314	1
2-Butanone (MEK)	ug/l	100.00	87.91	88	
n-Butylbenzene	ug/l	50.00	47.48	95	
sec-Butylbenzene	ug/l	50.00	50.27	101	
tert-Butylbenzene	ug/l	50.00	50.26	101	
Carbon disulfide	ug/l	100.00	93.69	94	
Carbon tetrachloride	ug/l	50.00	53.97	108	
Chlorobenzene	ug/l	50.00	47.81	96	
Chloroethane	ug/l	50.00	41.89	84	
Chloroform	ug/l	50.00	44.91	90	
Chloromethane	ug/l	50.00	34.68	69	
2-Chlorotoluene	ug/l	50.00	49.02	98	
4-Chlorotoluene	ug/l	50.00	48.66	97	
1,2-Dibromo-3-chloropropane	ug/l	50.00	48.35	97	
Dibromochloromethane	ug/l	50.00	45.81	92	
1,2-Dibromoethane (EDB)	ug/l	50.00	47.63	95	
Dibromomethane	ug/l	50.00	47.20	94	
1,2-Dichlorobenzene	ug/l	50.00	46.70	93	
1,3-Dichlorobenzene	ug/l	50.00	46.39	93	
1,4-Dichlorobenzene	ug/l	50.00	45.38	91	
Dichlorodifluoromethane	ug/l	50.00	45.76	92	
1,1-Dichloroethane	ug/l	50.00	45.31	91	
1,2-Dichloroethane	ug/l	50.00	47.96	96	

Laboratory Certification IDs
NC Wastewater 12
NC Drinking Water 37706
SC 99006

REPORT OF LABORATORY ANALYSIS
This report shall not be reproduced, except in full,
without the written consent of Pace Analytical Services, Inc.

Laboratory Certification IDs
LA Wastewater 04034
VA Drinking Water 213
FL NELAP E87627

Pace Analytical™
www.pacelabs.com

Pace Analytical Services, Inc.
9800 Kincey Avenue, Suite 100
Huntersville, NC 28078
Phone: 704.875.9092
Fax: 704.875.9091

QUALITY CONTROL DATA

Lab Project Number: 9233669
Client Project ID: Former Worth/NC101047.0002

LABORATORY CONTROL SAMPLE: 922329875

Parameter	Units	Spike Conc.	LCS Result	LCS % Rec	Footnotes
1,1-Dichloroethene	ug/l	50.00	55.81	112	
cis-1,2-Dichloroethene	ug/l	50.00	46.37	93	
trans-1,2-Dichloroethene	ug/l	50.00	51.63	103	
1,2-Dichloropropane	ug/l	50.00	50.76	102	
1,3-Dichloropropane	ug/l	50.00	48.36	97	
2,2-Dichloropropane	ug/l	50.00	48.68	97	
1,1-Dichloropropene	ug/l	50.00	54.27	109	
Diisopropyl ether	ug/l	50.00	43.15	86	
Ethylbenzene	ug/l	50.00	49.33	99	
Hexachloro-1,3-butadiene	ug/l	50.00	56.43	113	
Isopropylbenzene (Cumene)	ug/l	50.00	50.67	101	
p-Isopropyltoluene	ug/l	50.00	49.66	99	
Methylene chloride	ug/l	50.00	46.67	93	
4-Methyl-2-pentanone (MIBK)	ug/l	100.00	95.67	96	
Methyl-tert-butyl ether	ug/l	50.00	42.03	84	
Naphthalene	ug/l	50.00	39.46	79	
n-Propylbenzene	ug/l	50.00	49.78	100	
Styrene	ug/l	50.00	48.62	97	
1,1,1,2-Tetrachloroethane	ug/l	50.00	48.42	97	
1,1,2,2-Tetrachloroethane	ug/l	50.00	45.38	91	
Tetrachloroethene	ug/l	50.00	66.79	134	2
Tetrahydrofuran	ug/l	500.00	406.6	81	
Toluene	ug/l	50.00	49.84	100	
1,2,3-Trichlorobenzene	ug/l	50.00	40.71	81	
1,2,4-Trichlorobenzene	ug/l	50.00	42.46	85	
1,1,1-Trichloroethane	ug/l	50.00	49.21	98	
1,1,2-Trichloroethane	ug/l	50.00	47.46	95	
Trichloroethene	ug/l	50.00	53.48	107	
Trichlorofluoromethane	ug/l	50.00	43.85	88	
1,2,3-Trichloropropane	ug/l	50.00	48.34	97	
1,2,4-Trimethylbenzene	ug/l	50.00	46.72	93	
1,3,5-Trimethylbenzene	ug/l	50.00	48.37	97	
Vinyl chloride	ug/l	50.00	40.88	82	
m&p-Xylene	ug/l	100.00	100.0	100	
o-Xylene	ug/l	50.00	48.85	98	
Toluene-d8 (S)				104	
4-Bromofluorobenzene (S)				103	

Laboratory Certification IDs
NC Wastewater 12
NC Drinking Water 37706
SC 99006

REPORT OF LABORATORY ANALYSIS

This report shall not be reproduced, except in full,
without the written consent of Pace Analytical Services, Inc.

Laboratory Certification IDs
LA Wastewater 04034
VA Drinking Water 213
FL NELAP E87627

Pace Analytical™
www.pacelabs.com

Pace Analytical Services, Inc.
9800 Kincey Avenue, Suite 100
Huntersville, NC 28078
Phone: 704.875.9092
Fax: 704.875.9091

QUALITY CONTROL DATA

Lab Project Number: 9233669
Client Project ID: Former Worth/NC101047.0002

LABORATORY CONTROL SAMPLE: 922329875

Parameter	Units	Spike Conc.	LCS Result	LCS % Rec	Footnotes
Dibromofluoromethane (S)				90	
1,2-Dichloroethane-d4 (S)				92	

MATRIX SPIKE: 922329883

Parameter	Units	922322417 Result	Spike Conc.	MS Result	MS % Rec	Footnotes
Benzene	ug/l	0	50.00	45.76	92	
Chlorobenzene	ug/l	0	50.00	42.44	85	
1,1-Dichloroethene	ug/l	0	50.00	51.49	103	
Toluene	ug/l	0	50.00	43.57	87	
Trichloroethene	ug/l	6.950	50.00	53.05	92	
Toluene-d8 (S)					102	
4-Bromofluorobenzene (S)					101	
Dibromofluoromethane (S)					93	
1,2-Dichloroethane-d4 (S)					93	

Laboratory Certification IDs
NC Wastewater 12
NC Drinking Water 37706
SC 99006

REPORT OF LABORATORY ANALYSIS
This report shall not be reproduced, except in full,
without the written consent of Pace Analytical Services, Inc.

Laboratory Certification IDs
LA Wastewater 04034
VA Drinking Water 213
FL NELAP E87627

Pace Analytical™
www.pacelabs.com

Pace Analytical Services, Inc.
9800 Kincey Avenue, Suite 100
Huntersville, NC 28078
Phone: 704.875.9092
Fax: 704.875.9091

QUALITY CONTROL DATA

Lab Project Number: 9233669
Client Project ID: Former Worth/NC101047.0002

QC Batch: 58899 — Analysis Method: EPA 200.7
QC Batch Method: EPA 200.7 — Analysis Description: Dissolved Metals, ICP, Trace
Associated Lab Samples: 922322615 922322623 922322631 922322649 922322656 922322714

METHOD BLANK: 922329586
Associated Lab Samples: 922322615 922322623 922322631 922322649 922322656 922322714

Parameter	Units	Blank Result	Reporting Limit	Footnotes
Iron, Dissolved	mg/l	ND	0.050	
Manganese, Dissolved	mg/l	ND	0.0050	

LABORATORY CONTROL SAMPLE: 922329610

Parameter	Units	Spike Conc.	LCS Result	LCS % Rec	Footnotes
Iron, Dissolved	mg/l	10.00	10.70	107	
Manganese, Dissolved	mg/l	0.2500	0.2700	108	

MATRIX SPIKE & MATRIX SPIKE DUPLICATE: 922329594 922329602

Parameter	Units	922322656 Result	Spike Conc.	MS Result	MSD Result	MS % Rec	MSD % Rec	RPD	Footnotes
Iron, Dissolved	mg/l	0.1250	10.00	10.50	10.50	104	104	0	
Manganese, Dissolved	mg/l	0.4510	0.2500	0.7220	0.7090	108	103	2	

Date: 06/28/02

Laboratory Certification IDs
NC Wastewater 12
NC Drinking Water 37706
SC 99006

REPORT OF LABORATORY ANALYSIS
This report shall not be reproduced, except in full,
without the written consent of Pace Analytical Services, Inc.

Laboratory Certification IDs
LA Wastewater 04034
VA Drinking Water 213
FL NELAP E87627

Pace Analytical™
www.pacelabs.com

Pace Analytical Services, Inc.
9800 Kincey Avenue, Suite 100
Huntersville, NC 28078
Phone: 704.875.9092
Fax: 704.875.9091

QUALITY CONTROL DATA

Lab Project Number: 9233669
Client Project ID: Former Worth/NC101047.0002

QC Batch: 58986 Analysis Method: EPA 200.7
QC Batch Method: Analysis Description: Trace ICP Metals
Associated Lab Samples: 922322417 922322425 922322441 922322474 922322490 922322508

METHOD BLANK: 922332085
Associated Lab Samples: 922322417 922322425 922322441 922322474 922322490 922322508

Parameter	Units	Blank Result	Reporting Limit	Footnotes
Iron	mg/l	ND	0.050	
Manganese	mg/l	ND	0.0050	

LABORATORY CONTROL SAMPLE: 922332093

Parameter	Units	Spike Conc.	LCS Result	LCS % Rec	Footnotes
Iron	mg/l	10.00	10.10	101	
Manganese	mg/l	0.2500	0.2600	104	

MATRIX SPIKE & MATRIX SPIKE DUPLICATE: 922332101 922332119

Parameter	Units	922328760 Result	Spike Conc.	MS Result	MSD Result	MS % Rec	MSD % Rec	RPD	Footnotes
Iron	mg/l	1.060	10.00	11.30	11.20	102	101	1	
Manganese	mg/l	0.06980	0.2500	0.3240	0.3230	102	101	0	

SAMPLE DUPLICATE: 922332127

Parameter	Units	922328778 Result	DUP Result	RPD	Footnotes
Iron	mg/l	15.00	15.00	1	
Manganese	mg/l	0.06700	0.06700	0	

Laboratory Certification IDs
NC Wastewater 12
NC Drinking Water 37706
SC 99006

REPORT OF LABORATORY ANALYSIS
This report shall not be reproduced, except in full,
without the written consent of Pace Analytical Services, Inc.

Laboratory Certification IDs
LA Wastewater 04034
VA Drinking Water 213
FL NELAP E87627

Pace Analytical™
www.pacelabs.com

Pace Analytical Services, Inc.
9800 Kincey Avenue, Suite 100
Huntersville, NC 28078
Phone: 704.875.9092
Fax: 704.875.9091

QUALITY CONTROL DATA

Lab Project Number: 9233669
Client Project ID: Former Worth/NC101047.0002

QC Batch: 58783 Analysis Method: EPA 405.1
QC Batch Method: Analysis Description: Biochemical Oxygen Demand, 5 d
Associated Lab Samples: 922322417 922322425 922322441 922322474 922322490 922322508

METHOD BLANK: 922323761
Associated Lab Samples: 922322417 922322425 922322441 922322474 922322490 922322508

Parameter	Units	Blank Result	Reporting Limit	Footnotes
BOD, 5 day	mg/l	ND	2.0	

LABORATORY CONTROL SAMPLE: 922323779

Parameter	Units	Spike Conc.	LCS Result	LCS % Rec	Footnotes
BOD, 5 day	mg/l	198.00	174.0	88	

SAMPLE DUPLICATE: 922323787

Parameter	Units	922321674 Result	DUP Result	RPD	Footnotes
BOD, 5 day	mg/l	200.0	220.0	11	

SAMPLE DUPLICATE: 922323795

Parameter	Units	922323134 Result	DUP Result	RPD	Footnotes
BOD, 5 day	mg/l	490.0	240.0	70	4,5

Laboratory Certification IDs
NC Wastewater 12
NC Drinking Water 37706
SC 99006

REPORT OF LABORATORY ANALYSIS
This report shall not be reproduced, except in full,
without the written consent of Pace Analytical Services, Inc.

Laboratory Certification IDs
LA Wastewater 04034
VA Drinking Water 213
FL NELAP E87627

Pace Analytical™
www.pacelabs.com

Pace Analytical Services, Inc.
9800 Kincey Avenue, Suite 100
Huntersville, NC 28078
Phone: 704.875.9092
Fax: 704.875.9091

QUALITY CONTROL DATA

Lab Project Number: 9233669
Client Project ID: Former Worth/NC101047.0002

QC Batch: 58834 — Analysis Method: EPA 410.4
QC Batch Method: EPA 410.4 — Analysis Description: Chemical Oxygen Demand
Associated Lab Samples: 922322417 922322425 922322441 922322474 922322490 922322508

METHOD BLANK: 922325899
Associated Lab Samples: 922322417 922322425 922322441 922322474 922322490 922322508

Parameter	Units	Blank Result	Reporting Limit	Footnotes
Chemical Oxygen Demand	mg/l	ND	25.	

LABORATORY CONTROL SAMPLE: 922325923

Parameter	Units	Spike Conc.	LCS Result	LCS % Rec	Footnotes
Chemical Oxygen Demand	mg/l	500.00	525.0	105	

MATRIX SPIKE: 922325907

Parameter	Units	922321740 Result	Spike Conc.	MS Result	MS % Rec	Footnotes
Chemical Oxygen Demand	mg/l	125.4	1000.00	1148	102	

SAMPLE DUPLICATE: 922325915

Parameter	Units	922321740 Result	DUP Result	RPD	Footnotes
Chemical Oxygen Demand	mg/l	130.0	120.0	8	

SAMPLE DUPLICATE: 922325931

Parameter	Units	922322425 Result	DUP Result	RPD	Footnotes
Chemical Oxygen Demand	mg/l	150.0	150.0	1	

Laboratory Certification IDs
NC Wastewater 12
NC Drinking Water 37706
SC 99006

REPORT OF LABORATORY ANALYSIS
This report shall not be reproduced, except in full,
without the written consent of Pace Analytical Services, Inc.

Laboratory Certification IDs
LA Wastewater 04034
VA Drinking Water 213
FL NELAP E87627

Pace Analytical™
www.pacelabs.com

Pace Analytical Services, Inc.
9800 Kincey Avenue, Suite 100
Huntersville, NC 28078
Phone: 704.875.9092
Fax: 704.875.9091

QUALITY CONTROL DATA

Lab Project Number: 9233669
Client Project ID: Former Worth/NC101047.0002

QC Batch: 58837 — Analysis Method: EPA 376.2
QC Batch Method: EPA 376.2 — Analysis Description: Sulfide, Total
Associated Lab Samples: 922322417 922322425 922322441 922322474 922322490 922322508

METHOD BLANK: 922325980
Associated Lab Samples: 922322417 922322425 922322441 922322474 922322490 922322508

Parameter	Units	Blank Result	Reporting Limit	Footnotes
Sulfide	mg/l	ND	0.050	

LABORATORY CONTROL SAMPLE: 922326020

Parameter	Units	Spike Conc.	LCS Result	LCS % Rec	Footnotes
Sulfide	mg/l	0.5000	0.4980	100	

MATRIX SPIKE: 922327325

Parameter	Units	922325634 Result	Spike Conc.	MS Result	MS % Rec	Footnotes
Sulfide	mg/l	0	0.5000	0.4400	88	

SAMPLE DUPLICATE: 922327333

Parameter	Units	922325675 Result	DUP Result	RPD	Footnotes
Sulfide	mg/l	ND	ND	NC	

Date: 06/28/02

Laboratory Certification IDs
NC Wastewater 12
NC Drinking Water 37706
SC 99006

REPORT OF LABORATORY ANALYSIS
This report shall not be reproduced, except in full,
without the written consent of Pace Analytical Services, Inc.

Laboratory Certification IDs
LA Wastewater 04034
VA Drinking Water 213
FL NELAP E87627

Pace Analytical™
www.pacelabs.com

Pace Analytical Services, Inc.
9800 Kincey Avenue, Suite 100
Huntersville, NC 28078
Phone: 704.875.9092
Fax: 704.875.9091

QUALITY CONTROL DATA

Lab Project Number: 9233669
Client Project ID: Former Worth/NC101047.0002

QC Batch: 58846 Analysis Method: EPA 310.1
QC Batch Method: EPA 310.1 Analysis Description: Alkalinity, Total
Associated Lab Samples: 922322417 922322425 922322441 922322474 922322490 922322508

SAMPLE DUPLICATE: 922327499

Parameter	Units	922311121 Result	DUP Result	RPD	Footnotes
Alkalinity, Total	mg/l	28.00	30.00	9	

SAMPLE DUPLICATE: 922327507

Parameter	Units	922322441 Result	DUP Result	RPD	Footnotes
Alkalinity, Total	mg/l	360.0	360.0	1	

Laboratory Certification IDs
NC Wastewater 12
NC Drinking Water 37706
SC 99006

REPORT OF LABORATORY ANALYSIS
This report shall not be reproduced, except in full,
without the written consent of Pace Analytical Services, Inc.

Laboratory Certification IDs
LA Wastewater 04034
VA Drinking Water 213
FL NELAP E87627

Pace Analytical™
www.pacelabs.com

Pace Analytical Services, Inc.
9800 Kincey Avenue, Suite 100
Huntersville, NC 28078
Phone: 704.875.9092
Fax: 704.875.9091

QUALITY CONTROL DATA

Lab Project Number: 9233669
Client Project ID: Former Worth/NC101047.0002

QC Batch: 58732 — Analysis Method: EPA 350.1
QC Batch Method: EPA 350.1 — Analysis Description: Ammonia
Associated Lab Samples: 922322417 922322425 922322441 922322474 922322490 922322508

METHOD BLANK: 922321922
Associated Lab Samples: 922322417 922322425 922322441 922322474 922322490 922322508

Parameter	Units	Blank Result	Reporting Limit	Footnotes
Nitrogen, Ammonia	mg/l	ND	0.10	

LABORATORY CONTROL SAMPLE: 922321955

Parameter	Units	Spike Conc.	LCS Result	LCS % Rec	Footnotes
Nitrogen, Ammonia	mg/l	2.500	2.373	95	

MATRIX SPIKE: 922321930

Parameter	Units	922320841 Result	Spike Conc.	MS Result	MS % Rec	Footnotes
Nitrogen, Ammonia	mg/l	6.457	2.500	10.06	144	

SAMPLE DUPLICATE: 922321948

Parameter	Units	922304373 Result	DUP Result	RPD	Footnotes
Nitrogen, Ammonia	mg/l	38.00	43.00	12	

SAMPLE DUPLICATE: 922323258

Parameter	Units	922322599 Result	DUP Result	RPD	Footnotes
Nitrogen, Ammonia	mg/l	44.00	42.00	3	

Laboratory Certification IDs
NC Wastewater 12
NC Drinking Water 37706
SC 99006

REPORT OF LABORATORY ANALYSIS
This report shall not be reproduced, except in full,
without the written consent of Pace Analytical Services, Inc.

Laboratory Certification IDs
LA Wastewater 04034
VA Drinking Water 213
FL NELAP E87627

Pace Analytical™
www.pacelabs.com

Pace Analytical Services, Inc.
9800 Kincey Avenue, Suite 100
Huntersville, NC 28078
Phone: 704.875.9092
Fax: 704.875.9091

QUALITY CONTROL DATA

Lab Project Number: 9233669
Client Project ID: Former Worth/NC101047.0002

QC Batch: 58774 Analysis Method: EPA 300.0
QC Batch Method: EPA 300.0 Analysis Description: Ion Chromatography
Associated Lab Samples: 922322417 922322425 922322441 922322474 922322490 922322508

METHOD BLANK: 922323415
Associated Lab Samples: 922322417 922322425 922322441 922322474 922322490 922322508

Parameter	Units	Blank Result	Reporting Limit	Footnotes
Chloride	mg/l	ND	1.0	
Nitrate	mg/l	ND	0.10	
Nitrite	mg/l	ND	0.10	
Sulfate	mg/l	ND	1.0	

LABORATORY CONTROL SAMPLE: 922323423

Parameter	Units	Spike Conc.	LCS Result	LCS % Rec	Footnotes
Chloride	mg/l	100.00	96.38	96	
Nitrate	mg/l	10.00	9.460	95	
Nitrite	mg/l	10.00	9.420	94	
Sulfate	mg/l	100.00	94.06	94	

MATRIX SPIKE & MATRIX SPIKE DUPLICATE: 922323431 922323449

Parameter	Units	922322417 Result	Spike Conc.	MS Result	MSD Result	MS % Rec	MSD % Rec	RPD	Footnotes
Chloride	mg/l	34.84	100.00	134.9	134.8	100	100	0	
Nitrate	mg/l	0.6800	10.00	10.20	10.22	95	95	0	
Nitrite	mg/l	0.1200	10.00	9.560	9.520	94	94	0	
Sulfate	mg/l	36.31	100.00	137.3	137.4	101	101	0	

SAMPLE DUPLICATE: 922323456

Parameter	Units	922322474 Result	DUP Result	RPD	Footnotes

Laboratory Certification IDs
NC Wastewater 12
NC Drinking Water 37706
SC 99006

REPORT OF LABORATORY ANALYSIS
This report shall not be reproduced, except in full,
without the written consent of Pace Analytical Services, Inc.

Laboratory Certification IDs
LA Wastewater 04034
VA Drinking Water 213
FL NELAP E87627

Pace Analytical™
www.pacelabs.com

Pace Analytical Services, Inc.
9800 Kincey Avenue, Suite 100
Huntersville, NC 28078
Phone: 704.875.9092
Fax: 704.875.9091

QUALITY CONTROL DATA

Lab Project Number: 9233669
Client Project ID: Former Worth/NC101047.0002

SAMPLE DUPLICATE: 922323456

Parameter	Units	922322474 Result	DUP Result	RPD	Footnotes
Chloride	mg/l	60.00	60.00	0	
Nitrate	mg/l	2.300	2.300	0	
Nitrite	mg/l	ND	ND	NC	
Sulfate	mg/l	29.00	31.00	4	

Laboratory Certification IDs
NC Wastewater 12
NC Drinking Water 37706
SC 99006

REPORT OF LABORATORY ANALYSIS
This report shall not be reproduced, except in full,
without the written consent of Pace Analytical Services, Inc.

Laboratory Certification IDs
LA Wastewater 04034
VA Drinking Water 213
FL NELAP E87627

Pace Analytical™
www.pacelabs.com

Pace Analytical Services, Inc.
9800 Kincey Avenue, Suite 100
Huntersville, NC 28078
Phone: 704.875.9092
Fax: 704.875.9091

Lab Project Number: 9233669
Client Project ID: Former Worth/NC101047.0002

QUALITY CONTROL DATA PARAMETER FOOTNOTES

Consistent with EPA guidelines, unrounded concentrations are displayed and have been used to calculate % Rec and RPD values.

LCS(D)	Laboratory Control Sample (Duplicate)
MS(D)	Matrix Spike (Duplicate)
DUP	Sample Duplicate
ND	Not detected at or above adjusted reporting limit
NC	Not Calculable
J	Estimated concentration above the adjusted method detection limit and below the adjusted reporting limit
MDL	Adjusted Method Detection Limit
RPD	Relative Percent Difference
(S)	Surrogate
[1]	Recovery falls outside of QC limits, however, this compound is not found in the associated samples.
[2]	The surrogate and/or spike recovery was outside acceptance limits.
[3]	The spike recovery was outside acceptance limits for the MS and/or MSD due to an analyte concentration in the sample at four times or greater than the spike concentration. The QC batch was accepted based upon LCS and/or LCSD recoveries within acceptance limits.
[4]	The calculated RPD was outside QC acceptance limits.
[5]	The sample was diluted to yield acceptable BOD results. The reported value is the maximum possible result. The actual result may be lower.

Laboratory Certification IDs
NC Wastewater 12
NC Drinking Water 37706
SC 99006

REPORT OF LABORATORY ANALYSIS
This report shall not be reproduced, except in full,
without the written consent of Pace Analytical Services, Inc.

Laboratory Certification IDs
LA Wastewater 04034
VA Drinking Water 213
FL NELAP E87627

Pace Analytical™
www.pacelabs.com

Pace Analytical Services, Inc.
54 Ravenscroft Drive
Asheville, NC 28801
Phone: 828.254.7176
Fax: 828.252.4618

QUALITY CONTROL DATA

Lab Project Number: 9330099
Client Project ID: ARCADIS-9233669

QC Batch: 27559 Analysis Method: SM 5310C
QC Batch Method: SM 5310B Analysis Description: Total Organic Carbon
Associated Lab Samples: 922322417 922322425 922322441 922322474 922322490 922322508

METHOD BLANK: 931245823
Associated Lab Samples: 922322417 922322425 922322441 922322474 922322490 922322508

Parameter	Units	Blank Result	Reporting Limit	Footnotes
Total Organic Carbon	mg/l	ND	0.50	

LABORATORY CONTROL SAMPLE: 931245864

Parameter	Units	Spike Conc.	LCS Result	LCS % Rec	Footnotes
Total Organic Carbon	mg/l	30.00	30.07	100	

MATRIX SPIKE & MATRIX SPIKE DUPLICATE: 931245831 931245849

Parameter	Units	931241954 Result	Spike Conc.	MS Result	MSD Result	MS % Rec	MSD % Rec	RPD	Footnotes
Total Organic Carbon	mg/l	0	30.00	31.70	31.46	106	105	1	

SAMPLE DUPLICATE: 931245856

Parameter	Units	931241962 Result	DUP Result	RPD	Footnotes
Total Organic Carbon	mg/l	ND	ND	NC	

Laboratory Certification IDs
NC Wastewater 40
NC Drinking Water 37712

REPORT OF LABORATORY ANALYSIS

This report shall not be reproduced, except in full,
without the written consent of Pace Analytical Services, Inc.

Laboratory Certification IDs
TN Drinking Water 02980
SC Environmental 99030

Pace Analytical™
www.pacelabs.com

Pace Analytical Services, Inc.
54 Ravenscroft Drive
Asheville, NC 28801
Phone: 828.254.7176
Fax: 828.252.4618

Lab Project Number: 9330099
Client Project ID: ARCADIS-9233669

QUALITY CONTROL DATA PARAMETER FOOTNOTES

Consistent with EPA guidelines, unrounded concentrations are displayed and have been used to calculate % Rec and RPD values.

LCS(D)	Laboratory Control Sample (Duplicate)
MS(D)	Matrix Spike (Duplicate)
DUP	Sample Duplicate
ND	Not detected at or above adjusted reporting limit
NC	Not Calculable
J	Estimated concentration above the adjusted method detection limit and below the adjusted reporting limit
MDL	Adjusted Method Detection Limit
RPD	Relative Percent Difference

Laboratory Certification IDs
NC Wastewater 40
NC Drinking Water 37712

REPORT OF LABORATORY ANALYSIS

This report shall not be reproduced, except in full,
without the written consent of Pace Analytical Services, Inc.

Laboratory Certification IDs
TN Drinking Water 02980
SC Environmental 99030

ARCADIS

Laboratory Task Order No./P.O. No. _____

CHAIN-OF-CUSTODY RECORD

Page _____ of _____

Project Number/Name: NC101047.0002.00004

Project Location: Former Worth Chemical, Durham, NC

Laboratory: Pace Analytical

Project Manager: Jim Shilliday

Sampler(s)/Affiliation: Dan Tomczak

JJ669

Sample ID/Location	Matrix	Date/Time Sampled	Lab ID	VOCs 8260 (40 ml vials w/HCl)	Methane, Ethane, Ethene, CO_2 (40 ml vials)	Total Organic Carbon (40 ml vials w/H_2SO_4)	BOD (1 L poly)	COD, Ammonia (100 ml poly)	Alkalinity (100 ml poly)	Sulfide (100 ml poly)	Chloride, Sulfate, Nitrate, Nitrite (100 ml poly)	Total Fe, Mn, $(NH_4)_2$ (100 ml poly)	* Dissolved Fe, Mn (100 ml poly)		Remarks	Total
MW-1	L	6-12-02/14:20		4	1	2	1	1	1	1	1	1	1	1	JJ22417	14
MW-2		6-12-02/15:30		4	1	2	1	1	1	1	1	1	1	1	JJ22425	14
MW-3		6-12-02/16:45		4											JJ22433	4
MW-4		6-12-02/13:00		4	2	2	1	1	1	1	1	1	1	1	JJ22441	15
MW-5		6-12-02/17:20		4											JJ22458	4
MW-6		6-11-02/17:20		4											JJ22466	4
MW-7		6-12-02/11:35		4	2	2	1	1	1	1	1	1	1	1	JJ22474	15
MW-8D **		6-12-02/12:40		2											JJ22482	2
MW-9		6-11-02/14:30		4	2	2	1	1	1	1	1	1	1	1	JJ22490	15
MW-10		6-11-02/13:20		4	2	2	1	1	1	1	1	1	1	1	JJ22508	15
MW-11		6-11-02/16:10		4											JJ22573	4
Trip Blank	↓	6-11-02/18:00		2											JJ22581	2
							Dissolved:				JJ22615				JJ22649	
											JJ22623				JJ22656	
											JJ22631				JJ22714	

Sample Matrix: L = Liquid; S = Solid; A = Air

Total No. of Bottles/Containers: 108

Relinquished by: Dan Tomczak	Organization: ARCADIS	Date 6/12/02	Time 21:00	Seal Intact? (Yes) No N/A
Received by: [signature]	Organization: PACE	Date 6/13/02	Time 1040	
Relinquished by: _____	Organization: _____	Date / /	Time _____	Seal Intact? Yes No N/A
Received by: _____	Organization: _____	Date / /	Time _____	

Special Instructions/Remarks:

* Dissolved Fe, Mn samples must first be filtered in the lab

** 24 hr TAT needed for the analytical results

Delivery Method: ☐ In Person ☒ Common Carrier FedEx (SPECIFY) ☐ Lab Courier ☐ Other _____ (SPECIFY)

AG 05-12.01

06/13/02 08:54 FAX 919 782 5905 ARCADIS G M 002

Pace Analytical™
www.pacelabs.com

Pace Analytical Services, Inc.
9800 Kincey Avenue, Suite 100
Huntersville, NC 28078
Phone: 704.875.9092
Fax: 704.875.9091

July 11, 2002

Mr. Jim Shilliday
ARCADIS Geraghty & Miller
2301 Rexwoods Dr.
Suite 200
Raleigh, NC 27607

RE: Lab Project Number: 9234281
Client Project ID: Former Worth/NC101047.0002

Dear Mr. Shilliday:

Enclosed are the analytical results for sample(s) received by the laboratory on July 3, 2002. Results reported herein conform to the most current NELAC standards, where applicable, unless otherwise narrated in the body of the report.

If you have any questions concerning this report please feel free to contact me.

Sincerely,

Sherri Howard
Sherri.Howard@pacelabs.com
Project Manager

Enclosures

Pace Analytical™
www.pacelabs.com

Pace Analytical Services, Inc.
9800 Kincey Avenue, Suite 100
Huntersville, NC 28078
Phone: 704.875.9092
Fax: 704.875.9091

Lab Project Number: 9234281
Client Project ID: Former Worth/NC101047.0002

Lab Sample No: 922366141 Project Sample Number: 9234281-001 Date Collected: 07/03/02 09:45
Client Sample ID: MW-8D Matrix: Water Date Received: 07/03/02 11:20

Parameters	Results	Units	Report Limit	DF	Analyzed	By	CAS No.	Qual	RegLmt
GC/MS Volatiles									
GC/MS VOCs by 8260	Method: EPA 8260								
Acetone	ND	ug/l	100	1.0	07/10/02 05:00	BCK	67-64-1		
Benzene	ND	ug/l	5.0	1.0	07/10/02 05:00	BCK	71-43-2		
Bromobenzene	ND	ug/l	5.0	1.0	07/10/02 05:00	BCK	108-86-1		
Bromochloromethane	ND	ug/l	5.0	1.0	07/10/02 05:00	BCK	74-97-5		
Bromodichloromethane	ND	ug/l	5.0	1.0	07/10/02 05:00	BCK	75-27-4		
Bromoform	ND	ug/l	5.0	1.0	07/10/02 05:00	BCK	75-25-2		
Bromomethane	ND	ug/l	10.	1.0	07/10/02 05:00	BCK	74-83-9		
2-Butanone (MEK)	ND	ug/l	100	1.0	07/10/02 05:00	BCK	78-93-3		
n-Butylbenzene	ND	ug/l	5.0	1.0	07/10/02 05:00	BCK	104-51-8		
sec-Butylbenzene	ND	ug/l	5.0	1.0	07/10/02 05:00	BCK	135-98-8		
tert-Butylbenzene	ND	ug/l	5.0	1.0	07/10/02 05:00	BCK	98-06-6		
Carbon disulfide	ND	ug/l	10.	1.0	07/10/02 05:00	BCK	75-15-0		
Carbon tetrachloride	ND	ug/l	5.0	1.0	07/10/02 05:00	BCK	56-23-5		
Chlorobenzene	ND	ug/l	5.0	1.0	07/10/02 05:00	BCK	108-90-7		
Chloroethane	ND	ug/l	10.	1.0	07/10/02 05:00	BCK	75-00-3		
Chloroform	ND	ug/l	5.0	1.0	07/10/02 05:00	BCK	67-66-3		
Chloromethane	ND	ug/l	10.	1.0	07/10/02 05:00	BCK	74-87-3		
2-Chlorotoluene	ND	ug/l	5.0	1.0	07/10/02 05:00	BCK	95-49-8		
4-Chlorotoluene	ND	ug/l	5.0	1.0	07/10/02 05:00	BCK	106-43-4		
1,2-Dibromo-3-chloropropane	ND	ug/l	5.0	1.0	07/10/02 05:00	BCK	96-12-8		
Dibromochloromethane	ND	ug/l	5.0	1.0	07/10/02 05:00	BCK	124-48-1		
1,2-Dibromoethane (EDB)	ND	ug/l	5.0	1.0	07/10/02 05:00	BCK	106-93-4		
Dibromomethane	ND	ug/l	5.0	1.0	07/10/02 05:00	BCK	74-95-3		
1,2-Dichlorobenzene	ND	ug/l	5.0	1.0	07/10/02 05:00	BCK	95-50-1		
1,3-Dichlorobenzene	ND	ug/l	5.0	1.0	07/10/02 05:00	BCK	541-73-1		
1,4-Dichlorobenzene	ND	ug/l	5.0	1.0	07/10/02 05:00	BCK	106-46-7		
Dichlorodifluoromethane	ND	ug/l	10.	1.0	07/10/02 05:00	BCK	75-71-8		
1,1-Dichloroethane	ND	ug/l	5.0	1.0	07/10/02 05:00	BCK	75-34-3		
1,2-Dichloroethane	ND	ug/l	5.0	1.0	07/10/02 05:00	BCK	107-06-2		
1,1-Dichloroethene	ND	ug/l	5.0	1.0	07/10/02 05:00	BCK	75-35-4		
cis-1,2-Dichloroethene	ND	ug/l	5.0	1.0	07/10/02 05:00	BCK	156-59-2		
trans-1,2-Dichloroethene	ND	ug/l	5.0	1.0	07/10/02 05:00	BCK	156-60-5		
1,2-Dichloropropane	ND	ug/l	5.0	1.0	07/10/02 05:00	BCK	78-87-5		
1,3-Dichloropropane	ND	ug/l	5.0	1.0	07/10/02 05:00	BCK	142-28-9		
2,2-Dichloropropane	ND	ug/l	5.0	1.0	07/10/02 05:00	BCK	594-20-7		
1,1-Dichloropropene	ND	ug/l	5.0	1.0	07/10/02 05:00	BCK	563-58-6		
Diisopropyl ether	ND	ug/l	5.0	1.0	07/10/02 05:00	BCK	108-20-3		

Laboratory Certification IDs
NC Wastewater 12
NC Drinking Water 37706
SC 99006

REPORT OF LABORATORY ANALYSIS
This report shall not be reproduced, except in full,
without the written consent of Pace Analytical Services, Inc.

Laboratory Certification IDs
LA Wastewater 04034
VA Drinking Water 213
FL NELAP E87627

Pace Analytical™
www.pacelabs.com

Pace Analytical Services, Inc.
9800 Kincey Avenue, Suite 100
Huntersville, NC 28078
Phone: 704.875.9092
Fax: 704.875.9091

Lab Project Number: 9234281
Client Project ID: Former Worth/NC101047.0002

Lab Sample No: 922366141 Project Sample Number: 9234281-001 Date Collected: 07/03/02 09:45
Client Sample ID: MW-8D Matrix: Water Date Received: 07/03/02 11:20

Parameters	Results	Units	Report Limit	DF	Analyzed	By	CAS No.	Qual	RegLmt
Ethylbenzene	ND	ug/l	5.0	1.0	07/10/02 05:00	BCK	100-41-4		
Hexachloro-1,3-butadiene	ND	ug/l	5.0	1.0	07/10/02 05:00	BCK	87-68-3		
Isopropylbenzene (Cumene)	ND	ug/l	5.0	1.0	07/10/02 05:00	BCK	98-82-8		
p-Isopropyltoluene	ND	ug/l	5.0	1.0	07/10/02 05:00	BCK	99-87-6		
Methylene chloride	ND	ug/l	5.0	1.0	07/10/02 05:00	BCK	75-09-2		
4-Methyl-2-pentanone (MIBK)	ND	ug/l	50.	1.0	07/10/02 05:00	BCK	108-10-1		
Methyl-tert-butyl ether	ND	ug/l	5.0	1.0	07/10/02 05:00	BCK	1634-04-4		
Naphthalene	ND	ug/l	5.0	1.0	07/10/02 05:00	BCK	91-20-3		
n-Propylbenzene	ND	ug/l	5.0	1.0	07/10/02 05:00	BCK	103-65-1		
Styrene	ND	ug/l	5.0	1.0	07/10/02 05:00	BCK	100-42-5		
1,1,1,2-Tetrachloroethane	ND	ug/l	5.0	1.0	07/10/02 05:00	BCK	630-20-6		
1,1,2,2-Tetrachloroethane	ND	ug/l	5.0	1.0	07/10/02 05:00	BCK	79-34-5		
Tetrachloroethene	ND	ug/l	5.0	1.0	07/10/02 05:00	BCK	127-18-4		
Tetrahydrofuran	ND	ug/l	50.	1.0	07/10/02 05:00	BCK	109-99-9		
Toluene	ND	ug/l	5.0	1.0	07/10/02 05:00	BCK	108-88-3		
1,2,3-Trichlorobenzene	ND	ug/l	5.0	1.0	07/10/02 05:00	BCK	87-61-6		
1,2,4-Trichlorobenzene	ND	ug/l	5.0	1.0	07/10/02 05:00	BCK	120-82-1		
1,1,1-Trichloroethane	ND	ug/l	5.0	1.0	07/10/02 05:00	BCK	71-55-6		
1,1,2-Trichloroethane	ND	ug/l	5.0	1.0	07/10/02 05:00	BCK	79-00-5		
Trichloroethene	ND	ug/l	5.0	1.0	07/10/02 05:00	BCK	79-01-6		
Trichlorofluoromethane	ND	ug/l	10.	1.0	07/10/02 05:00	BCK	75-69-4		
1,2,3-Trichloropropane	ND	ug/l	5.0	1.0	07/10/02 05:00	BCK	96-18-4		
1,2,4-Trimethylbenzene	ND	ug/l	5.0	1.0	07/10/02 05:00	BCK	95-63-6		
1,3,5-Trimethylbenzene	ND	ug/l	5.0	1.0	07/10/02 05:00	BCK	108-67-8		
Vinyl chloride	ND	ug/l	10.	1.0	07/10/02 05:00	BCK	75-01-4		
m&p-Xylene	ND	ug/l	10.	1.0	07/10/02 05:00	BCK			
o-Xylene	ND	ug/l	5.0	1.0	07/10/02 05:00	BCK	95-47-6		
Toluene-d8 (S)	98	%		1.0	07/10/02 05:00	BCK	2037-26-5		
4-Bromofluorobenzene (S)	98	%		1.0	07/10/02 05:00	BCK	460-00-4		
Dibromofluoromethane (S)	91	%		1.0	07/10/02 05:00	BCK			
1,2-Dichloroethane-d4 (S)	87	%		1.0	07/10/02 05:00	BCK	17060-07-0		

Laboratory Certification IDs
NC Wastewater 12
NC Drinking Water 37706
SC 99006

REPORT OF LABORATORY ANALYSIS
This report shall not be reproduced, except in full,
without the written consent of Pace Analytical Services, Inc.

Laboratory Certification IDs
LA Wastewater 04034
VA Drinking Water 213
FL NELAP E87627

Pace Analytical™
www.pacelabs.com

Pace Analytical Services, Inc.
9800 Kincey Avenue, Suite 100
Huntersville, NC 28078
Phone: 704.875.9092
Fax: 704.875.9091

Lab Project Number: 9234281
Client Project ID: Former Worth/NC101047.0002

Lab Sample No: 922366158 Project Sample Number: 9234281-002 Date Collected: 07/03/02 10:15
Client Sample ID: TRIP BLANK Matrix: Water Date Received: 07/03/02 11:20

Parameters	Results	Units	Report Limit	DF	Analyzed	By	CAS No.	Qual	RegLmt
GC/MS Volatiles									
GC/MS VOCs by 8260	Method: EPA 8260								
Acetone	ND	ug/l	100	1.0	07/05/02 14:25	DLK	67-64-1		
Benzene	ND	ug/l	5.0	1.0	07/05/02 14:25	DLK	71-43-2		
Bromobenzene	ND	ug/l	5.0	1.0	07/05/02 14:25	DLK	108-86-1		
Bromochloromethane	ND	ug/l	5.0	1.0	07/05/02 14:25	DLK	74-97-5		
Bromodichloromethane	ND	ug/l	5.0	1.0	07/05/02 14:25	DLK	75-27-4		
Bromoform	ND	ug/l	5.0	1.0	07/05/02 14:25	DLK	75-25-2		
Bromomethane	ND	ug/l	10.	1.0	07/05/02 14:25	DLK	74-83-9		
2-Butanone (MEK)	ND	ug/l	100	1.0	07/05/02 14:25	DLK	78-93-3		
n-Butylbenzene	ND	ug/l	5.0	1.0	07/05/02 14:25	DLK	104-51-8		
sec-Butylbenzene	ND	ug/l	5.0	1.0	07/05/02 14:25	DLK	135-98-8		
tert-Butylbenzene	ND	ug/l	5.0	1.0	07/05/02 14:25	DLK	98-06-6		
Carbon disulfide	ND	ug/l	10.	1.0	07/05/02 14:25	DLK	75-15-0		
Carbon tetrachloride	ND	ug/l	5.0	1.0	07/05/02 14:25	DLK	56-23-5		
Chlorobenzene	ND	ug/l	5.0	1.0	07/05/02 14:25	DLK	108-90-7		
Chloroethane	ND	ug/l	10.	1.0	07/05/02 14:25	DLK	75-00-3		
Chloroform	ND	ug/l	5.0	1.0	07/05/02 14:25	DLK	67-66-3		
Chloromethane	ND	ug/l	10.	1.0	07/05/02 14:25	DLK	74-87-3		
2-Chlorotoluene	ND	ug/l	5.0	1.0	07/05/02 14:25	DLK	95-49-8		
4-Chlorotoluene	ND	ug/l	5.0	1.0	07/05/02 14:25	DLK	106-43-4		
1,2-Dibromo-3-chloropropane	ND	ug/l	5.0	1.0	07/05/02 14:25	DLK	96-12-8		
Dibromochloromethane	ND	ug/l	5.0	1.0	07/05/02 14:25	DLK	124-48-1		
1,2-Dibromoethane (EDB)	ND	ug/l	5.0	1.0	07/05/02 14:25	DLK	106-93-4		
Dibromomethane	ND	ug/l	5.0	1.0	07/05/02 14:25	DLK	74-95-3		
1,2-Dichlorobenzene	ND	ug/l	5.0	1.0	07/05/02 14:25	DLK	95-50-1		
1,3-Dichlorobenzene	ND	ug/l	5.0	1.0	07/05/02 14:25	DLK	541-73-1		
1,4-Dichlorobenzene	ND	ug/l	5.0	1.0	07/05/02 14:25	DLK	106-46-7		
Dichlorodifluoromethane	ND	ug/l	10.	1.0	07/05/02 14:25	DLK	75-71-8		
1,1-Dichloroethane	ND	ug/l	5.0	1.0	07/05/02 14:25	DLK	75-34-3		
1,2-Dichloroethane	ND	ug/l	5.0	1.0	07/05/02 14:25	DLK	107-06-2		
1,1-Dichloroethene	ND	ug/l	5.0	1.0	07/05/02 14:25	DLK	75-35-4		
cis-1,2-Dichloroethene	ND	ug/l	5.0	1.0	07/05/02 14:25	DLK	156-59-2		
trans-1,2-Dichloroethene	ND	ug/l	5.0	1.0	07/05/02 14:25	DLK	156-60-5		
1,2-Dichloropropane	ND	ug/l	5.0	1.0	07/05/02 14:25	DLK	78-87-5		
1,3-Dichloropropane	ND	ug/l	5.0	1.0	07/05/02 14:25	DLK	142-28-9		
2,2-Dichloropropane	ND	ug/l	5.0	1.0	07/05/02 14:25	DLK	594-20-7		
1,1-Dichloropropene	ND	ug/l	5.0	1.0	07/05/02 14:25	DLK	563-58-6		
Diisopropyl ether	ND	ug/l	5.0	1.0	07/05/02 14:25	DLK	108-20-3		

Laboratory Certification IDs
NC Wastewater 12
NC Drinking Water 37706
SC 99006

REPORT OF LABORATORY ANALYSIS

This report shall not be reproduced, except in full,
without the written consent of Pace Analytical Services, Inc.

Laboratory Certification IDs
LA Wastewater 04034
VA Drinking Water 213
FL NELAP E87627

Pace Analytical™
www.pacelabs.com

Pace Analytical Services, Inc.
9800 Kincey Avenue, Suite 100
Huntersville, NC 28078
Phone: 704.875.9092
Fax: 704.875.9091

Lab Project Number: 9234281
Client Project ID: Former Worth/NC101047.0002

Lab Sample No: 922366158 Project Sample Number: 9234281-002 Date Collected: 07/03/02 10:15
Client Sample ID: TRIP BLANK Matrix: Water Date Received: 07/03/02 11:20

Parameters	Results	Units	Report Limit	DF	Analyzed	By	CAS No.	Qual	RegLmt
Ethylbenzene	ND	ug/l	5.0	1.0	07/05/02 14:25	DLK	100-41-4		
Hexachloro-1,3-butadiene	ND	ug/l	5.0	1.0	07/05/02 14:25	DLK	87-68-3		
Isopropylbenzene (Cumene)	ND	ug/l	5.0	1.0	07/05/02 14:25	DLK	98-82-8		
p-Isopropyltoluene	ND	ug/l	5.0	1.0	07/05/02 14:25	DLK	99-87-6		
Methylene chloride	ND	ug/l	5.0	1.0	07/05/02 14:25	DLK	75-09-2		
4-Methyl-2-pentanone (MIBK)	ND	ug/l	50.	1.0	07/05/02 14:25	DLK	108-10-1		
Methyl-tert-butyl ether	ND	ug/l	5.0	1.0	07/05/02 14:25	DLK	1634-04-4		
Naphthalene	ND	ug/l	5.0	1.0	07/05/02 14:25	DLK	91-20-3		
n-Propylbenzene	ND	ug/l	5.0	1.0	07/05/02 14:25	DLK	103-65-1		
Styrene	ND	ug/l	5.0	1.0	07/05/02 14:25	DLK	100-42-5		
1,1,1,2-Tetrachloroethane	ND	ug/l	5.0	1.0	07/05/02 14:25	DLK	630-20-6		
1,1,2,2-Tetrachloroethane	ND	ug/l	5.0	1.0	07/05/02 14:25	DLK	79-34-5		
Tetrachloroethene	ND	ug/l	5.0	1.0	07/05/02 14:25	DLK	127-18-4		
Tetrahydrofuran	ND	ug/l	50.	1.0	07/05/02 14:25	DLK	109-99-9		
Toluene	ND	ug/l	5.0	1.0	07/05/02 14:25	DLK	108-88-3		
1,2,3-Trichlorobenzene	ND	ug/l	5.0	1.0	07/05/02 14:25	DLK	87-61-6		
1,2,4-Trichlorobenzene	ND	ug/l	5.0	1.0	07/05/02 14:25	DLK	120-82-1		
1,1,1-Trichloroethane	ND	ug/l	5.0	1.0	07/05/02 14:25	DLK	71-55-6		
1,1,2-Trichloroethane	ND	ug/l	5.0	1.0	07/05/02 14:25	DLK	79-00-5		
Trichloroethene	ND	ug/l	5.0	1.0	07/05/02 14:25	DLK	79-01-6		
Trichlorofluoromethane	ND	ug/l	10.	1.0	07/05/02 14:25	DLK	75-69-4		
1,2,3-Trichloropropane	ND	ug/l	5.0	1.0	07/05/02 14:25	DLK	96-18-4		
1,2,4-Trimethylbenzene	ND	ug/l	5.0	1.0	07/05/02 14:25	DLK	95-63-6		
1,3,5-Trimethylbenzene	ND	ug/l	5.0	1.0	07/05/02 14:25	DLK	108-67-8		
Vinyl chloride	ND	ug/l	10.	1.0	07/05/02 14:25	DLK	75-01-4		
m&p-Xylene	ND	ug/l	10.	1.0	07/05/02 14:25	DLK			
o-Xylene	ND	ug/l	5.0	1.0	07/05/02 14:25	DLK	95-47-6		
Toluene-d8 (S)	100	%		1.0	07/05/02 14:25	DLK	2037-26-5		
4-Bromofluorobenzene (S)	100	%		1.0	07/05/02 14:25	DLK	460-00-4		
Dibromofluoromethane (S)	91	%		1.0	07/05/02 14:25	DLK			
1,2-Dichloroethane-d4 (S)	88	%		1.0	07/05/02 14:25	DLK	17060-07-0		

Laboratory Certification IDs
NC Wastewater 12
NC Drinking Water 37706
SC 99006

REPORT OF LABORATORY ANALYSIS
This report shall not be reproduced, except in full,
without the written consent of Pace Analytical Services, Inc.

Laboratory Certification IDs
LA Wastewater 04034
VA Drinking Water 213
FL NELAP E87627

Pace Analytical™
www.pacelabs.com

Pace Analytical Services, Inc.
9800 Kincey Avenue, Suite 100
Huntersville, NC 28078
Phone: 704.875.9092
Fax: 704.875.9091

Lab Project Number: 9234281
Client Project ID: Former Worth/NC101047.0002

PARAMETER FOOTNOTES

Dilution factor shown represents the factor applied to the reported result and reporting limit due to changes in sample preparation, dilution of the extract, or moisture content

ND	Not detected at or above adjusted reporting limit
NC	Not Calculable
J	Estimated concentration above the adjusted method detection limit and below the adjusted reporting limit
MDL	Adjusted Method Detection Limit
(S)	Surrogate

Laboratory Certification IDs
NC Wastewater 12
NC Drinking Water 37706
SC 99006

REPORT OF LABORATORY ANALYSIS
This report shall not be reproduced, except in full,
without the written consent of Pace Analytical Services, Inc.

Laboratory Certification IDs
LA Wastewater 04034
VA Drinking Water 213
FL NELAP E87627

Pace Analytical™
www.pacelabs.com

Pace Analytical Services, Inc.
9800 Kincey Avenue, Suite 100
Huntersville, NC 28078
Phone: 704.875.9092
Fax: 704.875.9091

QUALITY CONTROL DATA

Lab Project Number: 9234281
Client Project ID: Former Worth/NC101047.0002

QC Batch: 59760 Analysis Method: EPA 8260
QC Batch Method: EPA 8260 Analysis Description: GC/MS VOCs by 8260
Associated Lab Samples: 922366141 922366158

METHOD BLANK: 922368105
Associated Lab Samples: 922366141 922366158

Parameter	Units	Blank Result	Reporting Limit	Footnotes
Benzene	ug/l	ND	5.0	
Bromobenzene	ug/l	ND	5.0	
Bromochloromethane	ug/l	ND	5.0	
Bromodichloromethane	ug/l	ND	5.0	
Bromoform	ug/l	ND	5.0	
Bromomethane	ug/l	ND	10.	
n-Butylbenzene	ug/l	ND	5.0	
sec-Butylbenzene	ug/l	ND	5.0	
tert-Butylbenzene	ug/l	ND	5.0	
Carbon tetrachloride	ug/l	ND	5.0	
Chlorobenzene	ug/l	ND	5.0	
Chloroethane	ug/l	ND	10.	
Chloroform	ug/l	ND	5.0	
Chloromethane	ug/l	ND	10.	
2-Chlorotoluene	ug/l	ND	5.0	
4-Chlorotoluene	ug/l	ND	5.0	
1,2-Dibromo-3-chloropropane	ug/l	ND	5.0	
Dibromochloromethane	ug/l	ND	5.0	
1,2-Dibromoethane (EDB)	ug/l	ND	5.0	
Dibromomethane	ug/l	ND	5.0	
1,2-Dichlorobenzene	ug/l	ND	5.0	
1,3-Dichlorobenzene	ug/l	ND	5.0	
1,4-Dichlorobenzene	ug/l	ND	5.0	
Dichlorodifluoromethane	ug/l	ND	10.	
1,1-Dichloroethane	ug/l	ND	5.0	
1,2-Dichloroethane	ug/l	ND	5.0	
1,1-Dichloroethene	ug/l	ND	5.0	
cis-1,2-Dichloroethene	ug/l	ND	5.0	
trans-1,2-Dichloroethene	ug/l	ND	5.0	
1,2-Dichloropropane	ug/l	ND	5.0	
1,3-Dichloropropane	ug/l	ND	5.0	

Laboratory Certification IDs
NC Wastewater 12
NC Drinking Water 37706
SC 99006

REPORT OF LABORATORY ANALYSIS
This report shall not be reproduced, except in full,
without the written consent of Pace Analytical Services, Inc.

Laboratory Certification IDs
LA Wastewater 04034
VA Drinking Water 213
FL NELAP E87627

Pace Analytical™
www.pacelabs.com

Pace Analytical Services, Inc.
9800 Kincey Avenue, Suite 100
Huntersville, NC 28078
Phone: 704.875.9092
Fax: 704.875.9091

QUALITY CONTROL DATA

Lab Project Number: 9234281
Client Project ID: Former Worth/NC101047.0002

METHOD BLANK: 922368105
Associated Lab Samples: 922366141 922366158

Parameter	Units	Blank Result	Reporting Limit	Footnotes
2,2-Dichloropropane	ug/l	ND	5.0	
1,1-Dichloropropene	ug/l	ND	5.0	
Diisopropyl ether	ug/l	ND	5.0	
Ethylbenzene	ug/l	ND	5.0	
Hexachloro-1,3-butadiene	ug/l	ND	5.0	
Isopropylbenzene (Cumene)	ug/l	ND	5.0	
p-Isopropyltoluene	ug/l	ND	5.0	
Methylene chloride	ug/l	ND	5.0	
Methyl-tert-butyl ether	ug/l	ND	5.0	
Naphthalene	ug/l	ND	5.0	
n-Propylbenzene	ug/l	ND	5.0	
Styrene	ug/l	ND	5.0	
1,1,1,2-Tetrachloroethane	ug/l	ND	5.0	
1,1,2,2-Tetrachloroethane	ug/l	ND	5.0	
Tetrachloroethene	ug/l	ND	5.0	
Toluene	ug/l	ND	5.0	
1,2,3-Trichlorobenzene	ug/l	ND	5.0	
1,2,4-Trichlorobenzene	ug/l	ND	5.0	
1,1,1-Trichloroethane	ug/l	ND	5.0	
1,1,2-Trichloroethane	ug/l	ND	5.0	
Trichloroethene	ug/l	ND	5.0	
Trichlorofluoromethane	ug/l	ND	10.	
1,2,3-Trichloropropane	ug/l	ND	5.0	
1,2,4-Trimethylbenzene	ug/l	ND	5.0	
1,3,5-Trimethylbenzene	ug/l	ND	5.0	
Vinyl chloride	ug/l	ND	10.	
m&p-Xylene	ug/l	ND	10.	
o-Xylene	ug/l	ND	5.0	
Toluene-d8 (S)	%	100		
4-Bromofluorobenzene (S)	%	97		
Dibromofluoromethane (S)	%	88		
1,2-Dichloroethane-d4 (S)	%	86		

Laboratory Certification IDs
NC Wastewater 12
NC Drinking Water 37706
SC 99006

REPORT OF LABORATORY ANALYSIS
This report shall not be reproduced, except in full,
without the written consent of Pace Analytical Services, Inc.

Laboratory Certification IDs
LA Wastewater 04034
VA Drinking Water 213
FL NELAP E87627

Pace Analytical™
www.pacelabs.com

Pace Analytical Services, Inc.
9800 Kincey Avenue, Suite 100
Huntersville, NC 28078
Phone: 704.875.9092
Fax: 704.875.9091

QUALITY CONTROL DATA

Lab Project Number: 9234281
Client Project ID: Former Worth/NC101047.0002

LABORATORY CONTROL SAMPLE: 922368113

Parameter	Units	Spike Conc.	LCS Result	LCS % Rec	Footnotes
Acetone	ug/l	100.00	53.94	54	
Benzene	ug/l	50.00	44.64	89	
Bromobenzene	ug/l	50.00	43.00	86	
Bromochloromethane	ug/l	50.00	38.13	76	
Bromodichloromethane	ug/l	50.00	46.04	92	
Bromoform	ug/l	50.00	42.98	86	
Bromomethane	ug/l	50.00	117.9	236	1
2-Butanone (MEK)	ug/l	100.00	63.21	63	
n-Butylbenzene	ug/l	50.00	49.04	98	
sec-Butylbenzene	ug/l	50.00	45.73	92	
tert-Butylbenzene	ug/l	50.00	46.82	94	
Carbon disulfide	ug/l	100.00	94.36	94	
Carbon tetrachloride	ug/l	50.00	48.63	97	
Chlorobenzene	ug/l	50.00	44.60	89	
Chloroethane	ug/l	50.00	37.16	74	
Chloroform	ug/l	50.00	39.35	79	
Chloromethane	ug/l	50.00	25.13	50	
2-Chlorotoluene	ug/l	50.00	45.66	91	
4-Chlorotoluene	ug/l	50.00	43.89	88	
1,2-Dibromo-3-chloropropane	ug/l	50.00	41.72	83	
Dibromochloromethane	ug/l	50.00	45.40	91	
1,2-Dibromoethane (EDB)	ug/l	50.00	46.07	92	
Dibromomethane	ug/l	50.00	40.53	81	
1,2-Dichlorobenzene	ug/l	50.00	43.64	87	
1,3-Dichlorobenzene	ug/l	50.00	43.91	88	
1,4-Dichlorobenzene	ug/l	50.00	44.36	89	
Dichlorodifluoromethane	ug/l	50.00	42.67	85	
1,1-Dichloroethane	ug/l	50.00	39.39	79	
1,2-Dichloroethane	ug/l	50.00	41.26	82	
1,1-Dichloroethene	ug/l	50.00	43.26	86	
cis-1,2-Dichloroethene	ug/l	50.00	41.85	84	
trans-1,2-Dichloroethene	ug/l	50.00	44.22	88	
1,2-Dichloropropane	ug/l	50.00	48.87	98	
1,3-Dichloropropane	ug/l	50.00	46.37	93	
2,2-Dichloropropane	ug/l	50.00	49.43	99	
1,1-Dichloropropene	ug/l	50.00	49.18	98	
Diisopropyl ether	ug/l	50.00	40.24	80	

Laboratory Certification IDs
NC Wastewater 12
NC Drinking Water 37706
SC 99006

REPORT OF LABORATORY ANALYSIS
This report shall not be reproduced, except in full,
without the written consent of Pace Analytical Services, Inc.

Laboratory Certification IDs
LA Wastewater 04034
VA Drinking Water 213
FL NELAP E87627

Pace Analytical™
www.pacelabs.com

Pace Analytical Services, Inc.
9800 Kincey Avenue, Suite 100
Huntersville, NC 28078
Phone: 704.875.9092
Fax: 704.875.9091

QUALITY CONTROL DATA

Lab Project Number: 9234281
Client Project ID: Former Worth/NC101047.0002

LABORATORY CONTROL SAMPLE: 922368113

Parameter	Units	Spike Conc.	LCS Result	LCS % Rec	Footnotes
Ethylbenzene	ug/l	50.00	45.18	90	
Hexachloro-1,3-butadiene	ug/l	50.00	48.84	98	
Isopropylbenzene (Cumene)	ug/l	50.00	45.23	90	
p-Isopropyltoluene	ug/l	50.00	46.32	93	
Methylene chloride	ug/l	50.00	42.82	86	
4-Methyl-2-pentanone (MIBK)	ug/l	100.00	74.63	75	
Methyl-tert-butyl ether	ug/l	50.00	38.16	76	
Naphthalene	ug/l	50.00	45.88	92	
n-Propylbenzene	ug/l	50.00	46.31	93	
Styrene	ug/l	50.00	45.19	90	
1,1,1,2-Tetrachloroethane	ug/l	50.00	47.62	95	
1,1,2,2-Tetrachloroethane	ug/l	50.00	45.66	91	
Tetrachloroethene	ug/l	50.00	30.31	61	
Tetrahydrofuran	ug/l	500.00	327.1	65	
Toluene	ug/l	50.00	44.93	90	
1,2,3-Trichlorobenzene	ug/l	50.00	42.57	85	
1,2,4-Trichlorobenzene	ug/l	50.00	43.79	88	
1,1,1-Trichloroethane	ug/l	50.00	44.29	89	
1,1,2-Trichloroethane	ug/l	50.00	46.31	93	
Trichloroethene	ug/l	50.00	48.63	97	
Trichlorofluoromethane	ug/l	50.00	39.03	78	
1,2,3-Trichloropropane	ug/l	50.00	42.95	86	
1,2,4-Trimethylbenzene	ug/l	50.00	45.09	90	
1,3,5-Trimethylbenzene	ug/l	50.00	45.19	90	
Vinyl chloride	ug/l	50.00	35.05	70	
m&p-Xylene	ug/l	100.00	91.65	92	
o-Xylene	ug/l	50.00	44.37	89	
Toluene-d8 (S)				104	
4-Bromofluorobenzene (S)				99	
Dibromofluoromethane (S)				90	
1,2-Dichloroethane-d4 (S)				86	

Laboratory Certification IDs
NC Wastewater 12
NC Drinking Water 37706
SC 99006

REPORT OF LABORATORY ANALYSIS
This report shall not be reproduced, except in full,
without the written consent of Pace Analytical Services, Inc.

Laboratory Certification IDs
LA Wastewater 04034
VA Drinking Water 213
FL NELAP E87627

Pace Analytical™
www.pacelabs.com

Pace Analytical Services, Inc.
9800 Kincey Avenue, Suite 100
Huntersville, NC 28078
Phone: 704.875.9092
Fax: 704.875.9091

Lab Project Number: 9234281
Client Project ID: Former Worth/NC101047.0002

QUALITY CONTROL DATA PARAMETER FOOTNOTES

Consistent with EPA guidelines, unrounded concentrations are displayed and have been used to calculate % Rec and RPD values.

LCS(D)	Laboratory Control Sample (Duplicate)
MS(D)	Matrix Spike (Duplicate)
DUP	Sample Duplicate
ND	Not detected at or above adjusted reporting limit
NC	Not Calculable
J	Estimated concentration above the adjusted method detection limit and below the adjusted reporting limit
MDL	Adjusted Method Detection Limit
RPD	Relative Percent Difference
(S)	Surrogate
[1]	Recovery falls outside of QC limits, however, this compound is not found in the associated samples.

Laboratory Certification IDs
NC Wastewater 12
NC Drinking Water 37706
SC 99006

REPORT OF LABORATORY ANALYSIS
This report shall not be reproduced, except in full,
without the written consent of Pace Analytical Services, Inc.

Laboratory Certification IDs
LA Wastewater 04034
VA Drinking Water 213
FL NELAP E87627

[redacted] 8[redacted] - 4 Due: 7-9

ARCADIS

Laboratory Task Order No./P.O. No. _____

CHAIN-OF-CUSTODY RECORD

Page ____ of ____

Project Number/Name: NC101047.0002

Project Location: Former Worth Chemical - Durham

Laboratory: Pace Analytical

Project Manager: Jim Shilliday

Sampler(s)/Affiliation: Dan Tomczak

ANALYSIS / METHOD / SIZE

Sample ID/Location	Matrix	Date/Time Sampled	Lab ID	VOCs (8260 + Acetone, MEK, MIBK) 40 ml vials w/HCl						Remarks	Total
MW-8D	L	7-3-02/9:45		4						922366141	4
Trip Blank	L	7-3-02/10:15		2						922366158	2

Sample Matrix: L = Liquid; S = Solid; A = Air

Total No. of Bottles/Containers: 6

Relinquished by: [signature]	Organization: ARCADIS	Date 7/3/02	Time 11:20	Seal Intact?
Received by: [signature]	Organization: PACE	Date 7/3/02	Time 1120	(Yes) No N/A
Relinquished by:	Organization:	Date / /	Time	Seal Intact?
Received by:	Organization:	Date / /	Time	Yes No N/A

Special Instructions/Remarks:

* 72 hr TAT for analytical results 14°C

Delivery Method: ☐ In Person ☐ Common Carrier _____ SPECIFY ☒ Lab Courier ☐ Other _____ SPECIFY