530SERBSF10,631

530SERBSF10,631

Site Name (Subject):	THOMASVILLE FURNITURE INDS/LENOIR
Site ID (Document ID):	NCD054290770
Document Name (DocType):	Contractor Report (CONTR)
Report Segment:	
Description:	Phase II Site Assessment
Date of Document:	10/14/1992
Date Received:	
Box: *Enter SF and # with no spaces*	SF10,631
Access Level:	PUBLIC
Division:	WASTE MANAGEMENT
Section:	SUPERFUND
Program (Document Group):	SERB (SERB)
Document Category:	FACILITY

Print Report for Record | Go to New Blank Record | Go to New Record - (default to last record values) | Delete Record

Phase III Site Assessment

Thomasville Furniture Industries, Inc.
Lenoir, North Carolina

Prepared for
Thomasville Furniture Industries, Inc.

October 14, 1992

Thomas Lennon
Environmental Scientist

Bruce K. Braswell, P.G.
Senior Hydrogeologist

ENSCI Corporation
1108 Old Thomasville Road
High Point, North Carolina 27260
(919) 883-7505

Table of Contents

Executive Summary iii

1. Introduction 1
   1.1 Site History 1
   1.2 Scope of Work 4

2. Monitoring Well Installation and Geologic Findings 5
   2.1 Monitoring Well Installation 5
   2.2 Site Geologic Observations 5
   2.3 Groundwater Flow Direction 5

3. Groundwater Sampling and Analysis 8
   3.1 Volatile Organic Compounds 9
   3.2 Semivolatile Organic Compounds 11
   3.3 Alcohols 16

4. Conclusions 17

Appendix A: Technical Methods
Appendix B: Field Drilling and Monitoring Well Installation Records, Permit
Appendix C: Laboratory Analytical Reports and Chain of Custody Forms

Executive Summary

On December 27, 1990, Thomasville Furniture Industries, Inc. (TFI) discovered a drum believed to contain a solvent material in an excavation located in the parking lot of the TFI facility in Lenoir, North Carolina. ENSCI Corporation was contracted by TFI to perform an initial (Phase I) assessment of the area where the drum was found.

As detailed in ENSCI's June 24, 1991 Phase I Assessment Report, the assessment consisted of the following activities and resulted in the following findings:

- Installation of eight monitoring wells (MW-1 through MW-8) in order to assess the area where the drum was located and obtain geologic information to determine characteristics of the potentially impacted aquifer underlying the facility. Aquifer characteristics are documented in the report.
- Collection and laboratory analysis of groundwater samples from the monitoring wells in order to determine the potential existence and identity of contaminants. A variety of volatile and semivolatile organic compounds were detected in groundwater in levels which exceed 15A NCAC 2L standards.

Subsequent to the Phase I investigation, TFI contracted ENSCI to conduct a Phase II investigation at the subject facility. ENSCI's May 6, 1992 Phase II Assessment Report details the scope of work and findings of the investigation, which are summarized as follows:

- A soil gas survey of the TFI facility was conducted using Petrex sampling tubes. Results of this survey indicate the presence of two distinct contamination plumes present in soils underlying the TFI facility. Soil gas anomalies indicate that a plume composed almost exclusively of toluene is present well north of the drum burial location, possibly indicating a hydraulically upgradient source unrelated to the TFI facility.
- A Sub-Surface Interface Radar Survey (SIRS) was conducted in the southern end of the site to delineate possible trench locations and possible buried drum caches. Several linear alignments of hyperbolic reflections were identified in the data. The SIRS detected 200+ individual hyperbolic reflections with 50 percent coverage of the suspect area.
- Laboratory analysis of sediment and water from Blair Fork Creek, which were collected upstream and downstream of the potential drum burial area, indicates

the presence of some compounds which are found in groundwater. These results indicate a potential upgradient contamination source unrelated to the TFI facility.

- Resampling existing monitoring wells was conducted in order to determine contaminant identity. The detected materials are a combination of petroleum hydrocarbons and widespread, low-level halogenated compounds.

Based on the findings of the Phase II investigation indicating the presence of two distinct contamination plumes underlying the TFI facility, a Phase III investigation was undertaken. This investigation consisted of the following activities and targeted the following goals:

- An additional five monitoring wells (MW-8 through MW-13) were installed in the northern end of the facility to delineate the suspected contamination plume found in the soil gas survey conducted during the Phase II investigation.
- Groundwater samples from all existing monitoring wells (MW-1 through MW-13) were acquired and analyzed to further substantiate the existence of two separate contamination plumes and determine the identity of any additional contaminants potentially present in groundwater.

Following is a summary of the results of the Phase III investigation:

- Analysis of groundwater samples acquired from newly installed monitoring wells MW-9 through MW-13 did not indicate the presence of toluene. The findings of the soil gas survey conducted in the Phase II investigation indicated a soil gas plume composed almost exclusively of toluene to be present in the immediate vicinity of these monitoring wells. However, it may be that the soil gas plume extends laterally beyond contaminated groundwater.
- A comparison of types and concentrations of contaminants detected in analysis of groundwater samples acquired from monitoring wells located in the northern and southern ends of the facility indicates that there are two apparently separate contamination plumes. The source of contamination found in monitoring wells located in the northern end of the facility seems to be upgradient and unrelated to the TFI facility.
- Results of testing for volatile and semivolatile organic compounds of groundwater samples acquired from the southern end of the facility in the vicinity of the suspected drum burial site indicated the presence of compounds generally associated with solvents.

1. Introduction

ENSCI Corporation was contracted to perform a Phase III Assessment of the Thomasville Furniture Industries, Inc. facility in Lenoir, North Carolina. The purpose of the Phase III Assessment was to continue investigation which originated following the discovery of a drum at the site. This phase of work consisted of resampling monitoring wells which exist on the site, profiling materials (soil and groundwater) which have been collected onsite as a result of investigative activities, and installing additional monitoring wells to investigate the potential of an offsite source(s) of onsite contamination.

1.1 Site History

On December 27, 1990, Thomasville Furniture Industries, Inc. (TFI) discovered a drum believed to contain a solvent material in an excavation located in the parking lot of the Lenoir, North Carolina facility (see **Figure 1**). Subsequent to the discovery of the buried drum, Ms. Sherry Stookey, TFI's Environmental Compliance and Inspection Supervisor, immediately contacted Mr. Keith Masters of the Mooresville Regional Office of the North Carolina Department of Environment, Health & Natural Resources, Division of Environmental Management. On January 2, 1991, TFI's legal representative, Mr. Howard Grubbs, gave notice to the State Superfund Section of the Division of Environmental Management and the Site Assessment Division of the U.S. EPA, Region IV.

In mid-February, 1989 (prior to this incident), TFI had submitted notification to the state that an Inactive Hazardous Substance or Waste Disposal Site exists at the Lenoir facility. As a result, the TFI site currently appears in the following federal and state listings:

- U.S. EPA, Region Four
  Wastelan (January 23, 1991)
  PRGMO2: Pre Remedial/Federal Facility Report (Report 20)
  Reference # 02808
- NCDEHNR
  Superfund Section (February 1991)
  Inactive Hazardous Waste Site Priority List

TOPOGRAPHICAL MAP

Thomasville Furniture Incorporated
Lenoir, North Carolina

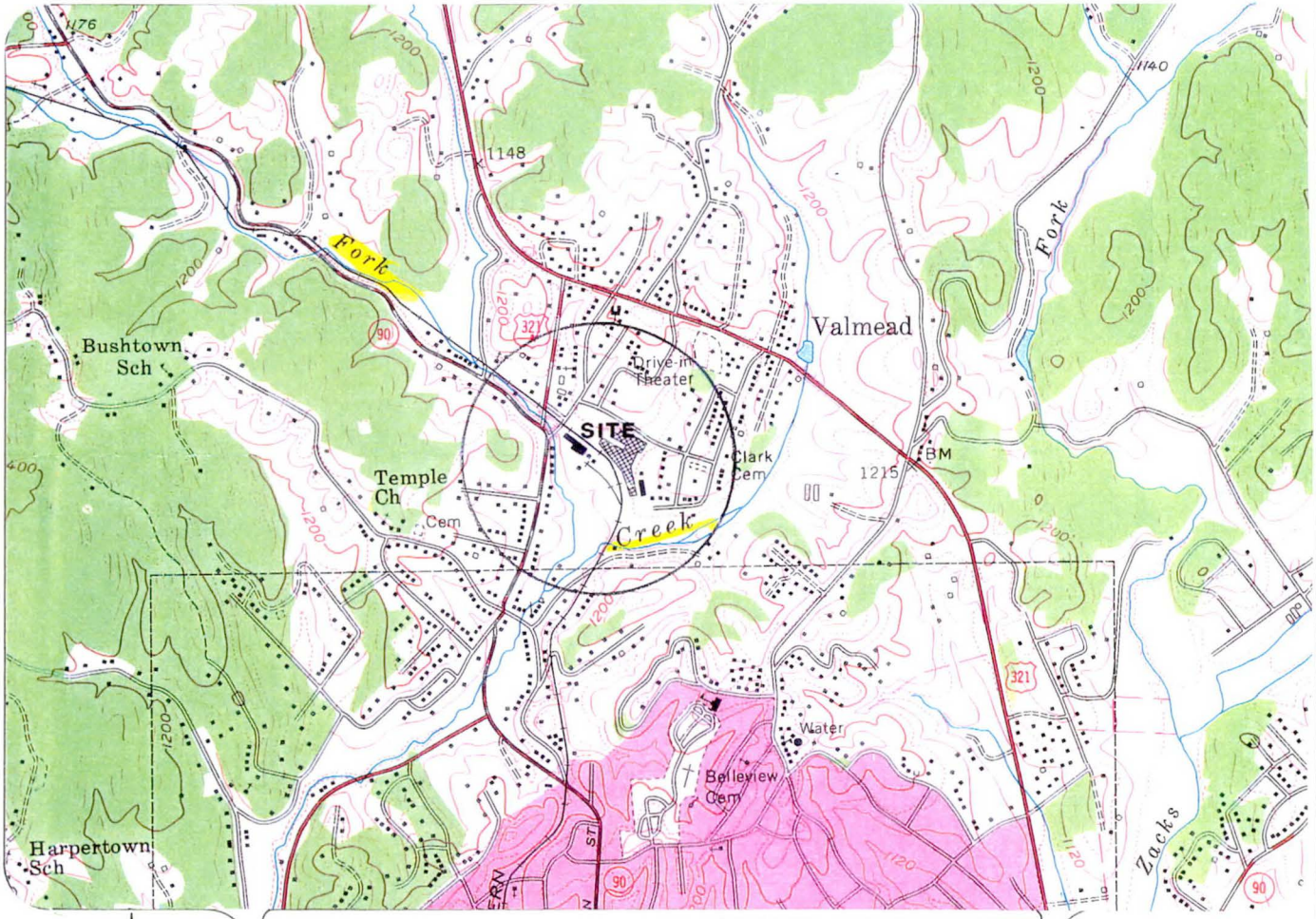

USGS LENOIR, NORTH CAROLINA 7.5 MINUTE QUADRANGLE

DATE OF MAP: 1956 PHOTOREVISION DATE: N/A

PHOTOREVISION DENOTED IN PURPLE (COLOR MAPS ONLY)

1000 0 1000 2000 3000 4000 5000 6000 7000 FEET SCALE 1:24000

QUADRANGLE LOCATION

ROAD CLASSIFICATION

HEAVY-DUTY
MEDIUM-DUTY
LIGHT-DUTY
FOOT TRAIL
WGN & JEEP TRACK
UNIMPROVED ROAD

U.S. ROUTE
STATE ROUTE
INTERSTATE ROUTE

ENSCI® CORPORATION
HIGH POINT, NORTH CAROLINA

FOR: THOMASVILLE FURNITURE INC.	CITY: LENOIR STATE: NORTH CAROLINA
TITLE: TOPOGRAPHIC MAP	

SCALE: 1"=2000'	DWN BY: DJ DWG NAME: USGS-1	FIGURE: 1
DATE: 9/3/92	CK BY: TL	JOB #: H92051

- NCDEHNR
  Division of Solid Waste Management
  Superfund Section (February 1991)
  North Carolina Inactive Hazardous Sites Inventory
  Site Priority List

ENSCI was contracted by TFI to perform an initial assessment of the area where the drum was located. To initiate the Phase I investigation, ENSCI implemented a drilling program designed to assess the area where the buried drum was discovered. This investigation consisted of the installation and sampling of eight monitoring wells (MW-1 through MW-8, see Figure 1) in the proximity of the potentially impacted area. The Phase I investigation yielded the following information, as discussed in the report dated June 24, 1992:

- Geologic information obtained during monitoring well installation indicates the soils underlying the site are composed of alluvium deposited by the Blair Fork Creek.
- Based on groundwater measurements in monitoring wells, it is apparent that Blair Fork Creek has a strong influence on the localized shallow aquifer.
- Analysis of groundwater samples indicated the presence of a variety of volatile and semivolatile organic compounds at levels which exceed 15A NCAC 2L standards.

Subsequent to the Phase I investigation, TFI contracted ENSCI to conduct a Phase II investigation at the Lenoir facility. The Phase II Site Assessment included a ground-penetrating radar survey, a soil gas survey, sampling of sediment and water from Blair Fork Creek, and additional groundwater sampling.

The Phase II investigation yielded the following information, as discussed in the report dated May 6, 1992:

- The ground-penetrating radar survey data indicated several linear alignments of hyperbolic reflections in the target area. An estimated 200+ individual reflections are suspected to be buried drums.

- Soil gas anomalies indicated a plume composed almost exclusively of toluene present well north of the SIRS clusters, which possibly indicates a source at or near the former Reliance facility. Information acquired from the North Carolina State Superfund Section reports indicates that the Reliance facility is fraught with plumes of widely disparate chemicals that impact soil and groundwater to an undetermined extent.
- The detected materials are a combination of petroleum hydrocarbons and widespread, low-level halogenated compounds.
- Analytical results for samples of water and sediment taken from Blair Fork Creek detected contaminants in both upgradient and downgradient locations. This would seem to indicate the presence of another source of contamination upgradient of the site.

1.2 Scope of Work

Subsequent to the Phase II investigation, TFI contracted ENSCI to perform a Phase III Assessment of the Lenoir facility. This phase of work was conducted in order to further characterize the identified contamination, profile materials (soil and groundwater) which have been collected onsite as a result of investigative activities, and determine if an upgradient source is responsible for a soil gas contamination plume detected on the TFI facility. The following site activities were performed June 8 through June 11, 1992:

- Installation of five additional monitoring wells in order to assess potential contamination of groundwater on the northern (upgradient) end of the facility.
- Collection and analysis of samples from all monitoring wells.
- Acquisition of composite samples from stockpiled 55-gallon drums containing drill cuttings and monitoring well wastewater.

2. Monitoring Well Installation and Geologic Findings

2.1 Monitoring Well Installation

In order to investigate the source of potential contamination on the north side of the facility, an additional five monitoring wells (MW-9 through MW-13) were installed using the procedures discussed in Appendix A. The locations of these wells (see **Figure 2**) were chosen based on the Phase II results of the soil gas survey and analysis of aqueous samples from Blair Fork Creek. The Phase II results indicated contaminants which originated upgradient, potentially from the former Reliance facility.

Monitoring wells MW-9 through MW-12 were Type II monitoring wells. In order to delineate the vertical extent of contamination, a Type III monitoring well (MW-13) was completed immediately adjacent to MW-12. Due to property boundaries, it was necessary to install all of these wells downgradient from the suspected source of contamination. Field Drilling and Monitoring Well Installation Records, as well as the well installation permit, are included as Appendix B.

2.2 Site Geologic Observations

As discussed in previous reports, the soils underlying the TFI facility are composed of alluvium deposited by Blair Fork Creek. This alluvium mantles a weathered saprolite lying stratigraphically below. The saprolite is derived from the in-situ chemical weathering of bedrock. The bedrock underlying the TFI facility is identified in the Preliminary Explanatory Text for the 1985 Geologic Map of North Carolina as medium to coarse-grained, thickly layered gneissic biotite granite to quartz diorite with biotite gneiss and schist, hornblend, gneiss, amphibolite, and meta-gabro. Additional geologic description is available in the Field Drilling Records, included in Appendix B.

2.3 Groundwater Flow Direction

In order to calculate the groundwater flow direction, ENSCI used a modeling program called WaterVel, which is marketed by InSitu, Inc. of Laramie, Wyoming. The WaterVel program utilizes the least mean squares method of determining the slope of a plane (groundwater surface) from at least three known points.

To accurately locate new and existing monitoring wells, recovery wells, and other features of the TFI Lenoir site, a revised site survey was conducted on June 24, 1992 by

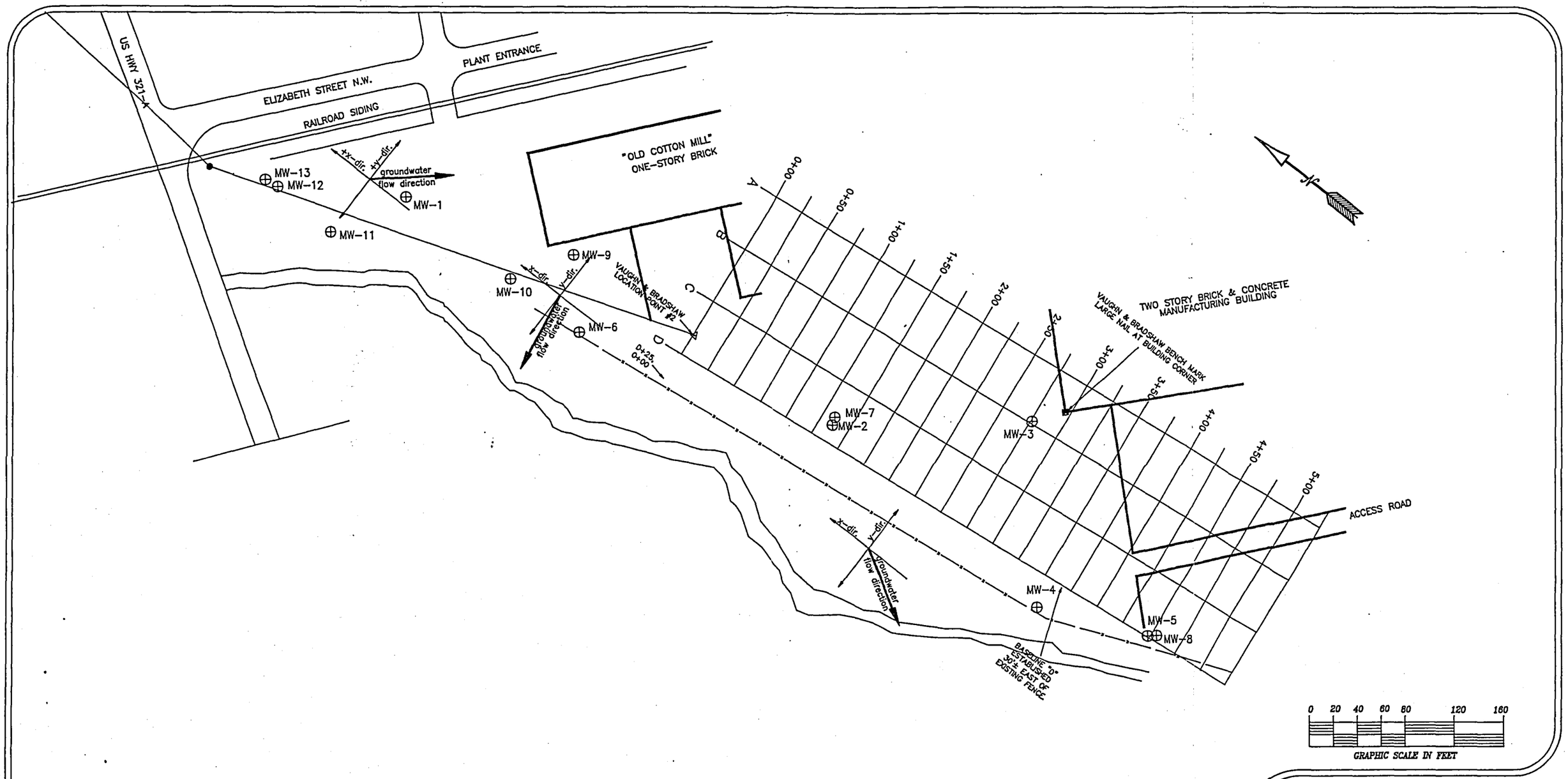

⊕ MONITORING WELL LOCATION

ENSCI®
CORPORATION
HIGH POINT, NORTH CAROLINA

FOR: TFI INCORPORATED	CITY: LENOIR STATE: NORTH CAROLINA
TITLE: CALCULATED GROUNDWATER FLOW DIRECTION MAP	
SCALE: 1"=80'	DWN BY: DJ DWG NAME: TFI-SITE
FIGURE: 2	
DATE: 9/9/92	CK BY: TL
JOB #: H92051	

Vaughn & Bradshaw Surveying Company of Hickory, North Carolina. Well casing elevation data from this survey was used, in conjunction with depth to groundwater measurements collected on June 11, 1992, to determine relative groundwater elevations for each monitoring well. **Table 1** contains the well casing elevations, depth to groundwater measurements, and relative groundwater elevation data. This data, in addition to the survey data concerning relative horizontal locations of the wells, was used to determine groundwater flow direction.

Table 1: Groundwater Elevation Data
(As measured in existing monitoring wells, June 11, 1992)

Monitoring Well	Elevation of Top of Casing	Depth to Groundwater	Groundwater Elevation
MW-1	1127.80	9.10	1118.7
MW-2	1125.47	7.35	1118.12
MW-3	1125.20	7.34	1117.86
MW-4	1122.71	5.59	1117.12
MW-5	1122.83	5.74	1117.09
MW-6	1128.00	9.89	1118.11
MW-7 *	1125.66	7.73	1117.93
MW-8 *	1122.76	8.71	1114.05
MW-9	1129.48	6.78	1122.70
MW-10	1129.34	10.90	1118.44
MW-11	1128.74	9.05	1119.69
MW-12	1129.10	8.73	1120.37
MW-13 *	1129.29	8.94	1120.35

* Type III (vertical extent) well

A review of a topographic map of the Lenoir area, an excerpt of which is included as Figure 1, indicates that the TFI facility is located in a small river valley which becomes narrow in the central portion of the facility. Due to the varying topography and the large area the site occupies, determinations of groundwater flow direction were made in three separate areas. These separate flow direction determinations were made in order to obtain an accurate estimation of the multiple groundwater flow directions underlying the facility.

For the northern portion of the facility, the data from monitoring wells MW-1, MW-11, and MW-12 were used in the calculation, which indicated a flow direction at a compass bearing 138.8 degrees. This calculated groundwater flow direction follows the direction of movement of the creek.

For the central portion of the facility, the data from monitoring wells MW-6, MW-9, and MW-10 were used in the calculation, which indicated a flow direction at a compass bearing 260.4 degrees. Due to the topographic influence of the narrowing of the river valley in this portion of the facility, groundwater flows directly into Blair Fork Creek.

In the southern portion of the facility, the data from monitoring wells MW-2, MW-3, and MW-4 were used in the calculation, which indicated a flow direction at a compass bearing 210 degrees. The steep grades of the narrowing river valley in the southern portion of the facility have apparently skewed the direction of groundwater flow in an a westerly direction, though not as dramatically as in the central portion of the facility.

Results of these calculations generally reflect the expected flow directions of groundwater based on the topographic influences on groundwater movement, as illustrated in Figure 2.

3. Groundwater Sampling and Analysis

Groundwater sampling of monitoring wells MW-1 through MW-13 was conducted on June 11, 1992. Acquired samples were tested using the following analytical methodologies:

- Method 8240, Gas Chromatography/ Mass Spectrometry for Volatile Organics, with accompanying library search.

- Method 8270, Gas Chromatography/ Mass Spectrometry for Semivolatile Organics, with accompanying library search.
- General Chromatography for Alcohols (isopropanol, methanol, ethanol, and butanol), for monitoring wells MW-9 through MW-13.

In addition to these analyses, a composite sample of stockpiled drill cuttings and purged groundwater were tested using EPA method 8240 and method 8270. The analytical reports are included in Appendix C, and results are discussed in the sections that follow.

3.1 Volatile Organic Compounds

Positive analytical results from EPA Method 8240, illustrated in **Table 2** on the following page, indicate that a total of six Volatile Organic Compounds (VOCs) were detected in monitoring wells at the TFI facility. The bottom row of the table contains the maximum allowable concentrations for North Carolina groundwater, as listed in 15A NCAC, Subchapter 2L, Section .0200.

As seen in Table 2, the following VOCs were detected in groundwater samples tested with EPA Method 8240:

- 2-Propanone (acetone) was detected in the samples from monitoring wells MW-2, MW-7, and MW-12 at levels which exceed North Carolina's acceptable limits, as specified in 15A NCAC 2L. In the remaining monitoring wells, acetone was indicated to be below quantitative limits for the analysis. Physical properties of this compound include miscibility in water and high flammability.
- Carbon disulfide was detected primarily in monitoring wells located in the southern end of the facility. The levels which were reported for the samples from MW-2, MW-6, and MW-7 exceed 15A NCAC 2L standards. In samples from other wells, carbon disulfide was indicated to be below quantitative limits for the analysis. Its physical properties include extreme flammability (flash point 22°F), a strong odor, and slight solubility in water.
- Chloroform was detected in the samples from monitoring wells MW-8, MW-11, and MW-13 at levels which exceed 15A NCAC 2L standards. This compound is generally found in deeper, Type III wells due to its density and insolubility in water. The detection of this compound in groundwater is probably attributed to its solubility in solvents.
- Benzene was detected in the sample from monitoring well MW-4, located in the southern end of the facility next to the creek, at a level which exceeds 15A

Table 2: Groundwater Analysis for Volatile Organics

EPA Test Method 8240 in parts per million

(Phase III Analytical Results - Samples Collected June 1992)

PARAMETER	2-PROPANONE (ACETONE)	CARBON DISULFIDE	CHLOROFORM	BENZENE	M-XYLENE	O P-XYLENE
MW-1	.073J	ND	ND	ND	ND	ND
MW-2	.120	.0094	ND	ND	ND	ND
MW-3	.014J	.002J	ND	ND	.10	ND
MW-4	.096J	.00085J	ND	.0083	.900+	.031
MW-5	.017J	.002J	ND	.0013J	.14	.0015J
MW-6	ND	.0089	ND	ND	ND	ND
MW-7*	.660	.0066	ND	ND	ND	ND
MW-8*	ND	ND	.0013J	ND	ND	ND
MW-9	ND	ND	ND	ND	ND	ND
MW-10	.028J	ND	ND	ND	ND	ND
MW-11	ND	ND	.0066	ND	ND	ND
MW-12	.200	ND	ND	ND	ND	ND
MW-13*	.039J	ND	.0077	ND	ND	ND
NCAC 2L Standards	# .10	.005	.00019	.001	.4**	.4**

ND Not Detected

* = Type III (Vertical Extent) Monitoring Well.

J = Detected below quantitative level.

\# = No specific standard is listed under 15A NCAC 2L; therefore, in accordance with regulations under this section, the standard is set at the quantitative detection limit for the analysis.

** = .4 ppm is 15A NCAC 2L standard for total sylene. Results from sample MW-4 exceed this level.

NCAC 2L standards.

- Xylene isomers were detected in samples from MW-3, MW-4, and MW-5 in the southern end of the facility. In monitoring well MW-4, the total concentration of xylene isomers which was indicated exceeds 15A NCAC 2L standards.

These compounds are commonly used in lacquers and solvents.

Previous sampling for VOCs in MW-1 through MW-8, discussed in the May 6, 1992 Phase II Assessment Report, produced similar results.

In order to identify any VOCs which were not detected during the initial testing with Method 8240, AnalytiKEM performed a detailed library search of its findings. The library search results (illustrated in **Table 3**) indicated the following:

- 1,1,2 Tricholoro-1,2,2 Trifluoroethane was detected in the shallow Type II wells located next to the creek in the central and southern portions of the facility. This compound is commonly used as a dry-cleaning solvent, solvent dryer and fire extinguishing agent.
- Isopropyl Ether was detected only in monitoring well MW-6 located in the central portion of the facility next to the creek. This compound is extremely flammable, soluble in water and commonly used as a solvent.
- A number of unknown cycloalkane and unknown volatile organic compounds were detected in many of the shallow Type II monitoring wells. The presence of these compounds in the shallow wells indicates that they have relatively low specific gravity and tend to float. Due to the wide variety of these types of compounds, no conclusions can be drawn as to their origin.

3.2 Semivolatile Organic Compounds

The results of analytical testing for semivolatile organics (EPA Method 8270) are illustrated in **Table 4**.

Table 3: Volatile Organic Compounds Library Search
in parts per billion
(Phase III Analytical Results - Samples Collected June 1992)

Monitoring Well	1,1,2 Trichloro-1,2,2 Trifluroethane	Isopropyl Ether	UNKNOWN Cycloalkane	UNKNOWN
MW-1	ND	ND	16,10	ND
MW-2	ND	ND	14,5	ND
MW-3	ND	ND	29,13,6.2	ND
MW-4	13	ND	8.6,17,8.2	20,5.1
MW-5	14	ND	ND	6.9
MW-6	15	ND	ND	ND
MW-7*	ND	ND	ND	ND
MW-8*	ND	ND	ND	ND
MW-9	ND	ND	ND	ND
MW-10	ND	ND	ND	ND
MW-11	ND	ND	ND	ND
MW-12	ND	6	ND	ND
MW-13*	ND	ND	ND	41

* = Vertical Extent Well.
ND = No Detection.

Table 4: Semi-volatile Organics
EPA Test Method 8270 in Parts Per Million
(Phase III Analytical Results - Samples Collected June 1992)

Sample	Naphthalene	2-Methyl-Naphthalene	Dibutyl Phthalate	BIS (2-Ethylhexyl) Phthalate**
MW-1	ND	ND	.025	.037
MW-2	.014	.013	.0022J	.140
MW-3	.001J	ND	.001J	.032
MW-4	.013	.012	ND	.160
MW-5	.042	.011	ND	.075
MW-6	ND	ND	ND	.056
MW-7*	ND	ND	.0038J	.10
MW-8*	ND	ND	.0017J	.049
MW-9	ND	ND	ND	ND
MW-10	ND	ND	ND	.0034J
MW-11	ND	ND	ND	.029
MW-12	ND	ND	ND	.026
MW-13*	ND	ND	.012	.120
15A NCAC 2L Standard	# .005	# .01	# .005	# .01

* = Vertical Extent Well
** = Compound used as plasticizer in latex gloves worn during sampling
\# = No 15A NCAC 2L Standard. In accordance with regulations, standard set at quantitative detection limit for analysis.

As illustrated in Table 4, EPA Method 8270 indicated the presence of four semivolatile compounds:

- Naphthalene was detected in samples from monitoring wells MW-2, MW-3, MW-4, and MW-5, which are located in the southern end of the facility. Detected levels in MW-2, MW-4, and MW-5 exceed 15A NCAC 2L limits. This compound is not soluble in water, but it is soluble in alcohols and ethers, which may account for its presence in groundwater.
- 2-Methyl-naphthalene was also detected in wells MW-2, MW-4, and MW-5 in excess of 15A NCAC 2L limits. This compound is not soluble in water, but it is soluble in alcohols and ethers, which may account for its presence in groundwater.
- Dibutyl phthalate was detected in concentrations above 15A NCAC 2L standards in the samples from monitoring wells MW-1 and MW-13, located in the northern end of the facility. This compound was also detected below practical quantitative limits in wells MW-2, MW-7, and MW-8, located in the southern end of the facility. Dibutyl phthalate is not soluble in water, but it is miscible with organic solvents which are suspected to be present in groundwater. It is commonly used as a plasticizer in nitrocellulose lacquers.
- The presence of bis (2-ethylhexyl) phthalate, which may be attributed to the plasticizer used in the latex sample gloves worn during sampling.

The semivolatile compounds detected in this investigation generally reflect the compounds found in previous sampling (see Phase II report), although dibutyl phthalate was not previously detected in MW-1 through MW-8.

In order to identify any semivolatile compounds which were not detected during the initial testing with Method 8270, AnalytiKEM performed a detailed library search of its findings. Results of this test are illustrated in **Table 5** on the following page.

The table illustrates the presence of a large number of unknown semivolatile compounds in the southern end of the facility, particularly in the Type II (shallow) monitoring wells. In the central portion of the facility, unknown semivolatile compounds were detected only in MW-6. In the northern end of the facility, results indicated little detection of additional semivolatile compounds except in the MW-13 sample. The sample from MW-13

Table 5: Semivolatile Organic Compound Library Search
in parts per billion
(Phase III Analytical Results - Samples Collected June 1992)

PARAMETER	MW-1	MW-2	MW-3	MW-4	MW-5	MW-6	MW-7*	MW-8*	MW-9	MW-10	MW-11	MW-12	MW-13*
Dimethyl Napthalene Isomer	ND	ND	ND	ND	29	ND	ND	ND	ND	ND	ND	ND	ND
Hexanedioic Acid Isomer+	12	28	12	ND	ND	ND	12	20	ND	ND	8	12	150
Dimethyl Benzene Isomer	ND	ND	ND	2600	780	ND	ND	ND	ND	ND	ND	ND	ND
Alkylated Aromatic	ND	20,28,8, 24,12	ND	ND	ND	ND	ND	ND	ND	ND	ND	ND	ND
Decahydro-Napthalene Isomer	ND	16	ND	ND	ND	ND	ND	ND	ND	ND	ND	ND	ND
Cyclohexanone, 4-Ethyl	ND	16	ND	ND	ND	ND	ND	ND	ND	ND	ND	ND	ND
Unknown - Idene Derivative	ND	8	ND	ND	ND	ND	ND	ND	ND	ND	ND	ND	ND
Dihydro-Dimethylindene Isomer	ND	12	ND	ND	ND	ND	ND	ND	ND	ND	ND	ND	ND
Hydroxy Methoxy Benzaldehyde	ND	ND	ND	ND	ND	ND	ND	ND	ND	ND	ND	ND	12
Unknown Hydrocarbon	8.0	ND	ND	ND	ND	ND	ND	ND	ND	ND	ND	ND	ND
Unknown Alkane Derivative	ND	ND	ND	ND	ND	ND	ND	ND	ND	ND	ND	ND	16,28
Unknown Alkane	ND	ND	ND	ND	ND	ND	ND	ND	ND	ND	ND	ND	24,12
Unknown Aromatic	ND	ND	ND	27,23,52,33 ,21,28	39,54,110,6 1,18,15,32,3 0	ND	ND	ND	ND	ND	ND	ND	ND
Unknown	ND	12,16, 12,8,12, 8,16	12	110,38,13,1 9,28,25,24, 26,73,20,26 ,23,61,39,5 9,21,38,57	11,25,22,21, 19,36,21,17, 30,37,15,48, 46,60,69	16,48	8,20, 28,16	8,8	ND	ND	ND	8	12,200, 28,12, 24,16

* = Vertical Extent Well.
ND = No Detection.
\+ Hexanedoic Acid Isoners are a by-product of laboratory procedures and their presence is not detected in groundwater.

indicated some unknown Alkane[1] compounds, unknown Alkane derivatives, and unknown semivolatile compounds. The Alkane compounds and derivatives found in MW-13 were not detected in any other groundwater samples.

3.3 Alcohols

Groundwater samples acquired for monitoring wells MW-9 through MW-13 were tested using a General Chromatography analysis for the presence of alcohols, as illustrated in **Table 6.**

Table 6: General Chromatography for Alcohols
(Parts Per Million)
(Phase III - Samples Collected June 1992)

Parameters	Methanol	Isopropanol
MW-9	.650	ND
MW-10	ND	ND
MW-11	ND	ND
MW-12	ND	ND
MW-13*	ND	2.8
15A NCAC 2L	# .6	# .6

* = Type III vertical extent well
\# = No 15A NCAC 2L Standard. In accordance with regulations, standard set at quantitative limit for analysis.

As illustrated in the table, only results for monitoring wells MW-9 and MW-13 indicated the presence of alcohols. In monitoring well MW-9, methanol was detected just above the quantitative detection limits for the analysis. Monitoring well MW-13 indicated

[1]. Alkane: A large group of hydrocarbon compounds in which all the carbon-carbon bonds are single bonds. The physical state of these compounds can range from gases (e.g., methane) to waxy solids (e.g., Paraffin wax).

isopropanol (isopropyl alcohol) in levels exceeding the 15A NCAC 2L groundwater standard of .6 ppm.

4. Conclusions

Based on analytical results of groundwater sampling of all existing monitoring wells located on the TFI facility, the following conclusions can be drawn:

- Analysis of groundwater samples acquired from monitoring wells (MW-9 through MW-13) installed in this Phase III investigation did not detect the presence of toluene. The findings of the soil gas survey conducted during the Phase II investigation indicated a soil gas plume composed almost exclusively toluene in the immediate vicinity of these monitoring wells. However, it may be that the soil gas plume extends laterally beyond contaminated groundwater. In conversations with Northeast Research Institute, Inc. (NERI), the firm which manufactured the Petrex tubes used in the survey, representatives indicate that given the loading rates of toluene on the activated carbon wires of the Petrex tubes used in the Phase II investigation, toluene-impacted soil and possibly groundwater should be expected at the site.
- Results of testing for volatile and semivolatile organic compounds in groundwater indicated the presence of compounds generally associated with solvents in samples acquired from the southern end of the facility in the vicinity of the suspected drum burial site.
- Type II monitoring wells MW-4, MW-5 and MW-6, located in the southern and central portions of the facility, contain many of the same contaminants. The close proximity of these wells to Blair Fork Creek indicates that the creek is a potential additional source of contamination, however the majority of contaminants found in monitoring wells MW-4 and MW-5 may be attributed to the alleged drum burial site.
- The source of contamination found in monitoring wells MW-1, MW-11, MW-12 and MW-13 seems to be upgradient and unrelated to the TFI facility. A comparison of analytical results of samples from monitoring wells located in the northern end of the facility to those of samples from monitoring wells in the southern end seems to indicate the presence of two separate contamination plumes on the TFI facility. The highest concentrations of dibutyl phthalate in groundwater was detected in monitoring wells MW-1 and MW-13, located on the northern end of the facility. Because these wells are located hydraulically upgradient of the

drum burial site, it is unlikely that the drum site is the source of this contaminant.

- The presence of Alkane compounds and Alkane derivatives was indicated only in samples from monitoring well MW-13. Due to the lack of detection of these compounds in groundwater samples acquired from monitoring wells located further to the south (hydraulically downgradient), the source of these contaminants is likely to be hydraulically upgradient.

Appendix A

Technical Methods

Monitoring Well Installation Methods

Installation of the Type II and Type III monitoring wells (MW-9 through MW-13) were completed using a truck-mounted, mobile B40L drill rig. In boring activities for the Type II wells, properly decontaminated 6.25-inch outside diameter hollow-stem augers were advanced to an average depth of 20 feet. Due to the dense nature of the underlying saprolite encountered at a depth of 13 feet, it was necessary to use roller cone drilling techniques in order to complete monitoring well MW-11. Stainless steel casing was used in the construction of all wells due to the unknown nature of the contaminants.

Installation of MW-13, a Type III monitoring well, was advanced to a depth of 30 feet with 10-inch outside diameter hollow-stem augers. After auger advancement, several bags (5-7) of portland cement were poured into the hollow-stem augers, and a 4-inch diameter pit casing (PVC) was pushed into the saprolite (using the rig head) to a depth of 30 feet. The augers were pulled out and the remaining annular space was grouted to the surface. Following solidification of the portland cement (48 hours), a 3-inch roller cone was advanced through the portland cement and into the saprolite/bedrock material to a total depth of 45 feet. Stainless steel riser and screen were used in the construction of all the wells due to the unknown nature of the contaminants. Upon completion of construction, the wells were developed in order to remove any sediment that had accumulated on the bottom. This was accomplished by bailing a minimum of three casing volumes from the well. The well was then allowed 48 hours to stabilize before purging activities to acquire groundwater samples. All drill cuttings and drilling fluids were collected and stored for sampling and disposal. Monitoring well installation records, permits and diagrams for Type II and Type III monitoring wells can be found in Appendix B.

Soil Sampling Methods

During all well boring activities, split-spoon soil samples were collected at 5-foot intervals. These samples were subsequently lithologically described and screened with a photoionization detector (PID), which detects hydrocarbon compounds.

None of the split-spoon soil samples registered an elevated PID reading that would indicate hydrocarbon contamination. This is contrary to the results of the soil gas survey, which detected elevated levels of total petroleum hydrocarbons in the area. It is important to note that the Petrex tubes used in the soil gas survey are much more sensitive detectors of these contaminants than the PID, and therefore it is possible that levels of contaminants were too low to be detected by the PID.

Lithological types encountered in boring activities during this investigation were similar to previous investigations at the TFI facility. Lithologic descriptions and corresponding PID readings are available in the Field drilling records in Appendix B.

Groundwater Sampling

After installation and water level measurements, the monitoring wells were purged a minimum of three well volumes prior to sample acquisition. Well purging was continued until pH, water temperature, and conductivity were all within 10 percent for three consecutive readings. In order to avoid cross-contamination during sampling, a Teflon bailer was permanently dedicated to each well. All acquired samples were placed in amber-colored jars and capped with ceramic lids with Teflon seals. All samples were stored in coolers with ice packs, maintained at 4° C, and shipped to AnalytiKEM, an EPA-approved laboratory in Rock Hill, South Carolina.

Appendix B

Field Drilling and Monitoring Well Installation Records and Permit

DIVISION OF ENVIRONMENTAL MANAGEMENT - GROUNDWATER SECTION
P.O. BOX 27687 - RALEIGH, NC 27611-7687
PHONE (919)733-3221

FOR OFFICE USE ONLY

Quad. No. _____ Serial No. _____
Lat. _____ Long. _____ Pc _____
Minor Basin _____
Basin Code _____
Header Ent. _____ GW-1 Ent. _____

WELL CONSTRUCTION RECORD

DRILLING CONTRACTOR: ENSCI Corporation

DRILLER REGISTRATION NUMBER: 1233

MW #9

STATE WELL CONSTRUCTION PERMIT NUMBER: 13-0221-WM-0044

1. WELL LOCATION: (Show sketch of the location below)
Nearest Town: Lenoir, N. C.
County: Caldwell
(Road, Community, or Subdivision and Lot No.)

2. OWNER: Thomasville Furniture Industries
ADDRESS: 315 Elizabeth St., N. W. (Street or Route No.)
Lenoir (City or Town) NC (State) (Zip Code)

3. DATE DRILLED: 6-10-92 USE OF WELL: Monitor GW
4. TOTAL DEPTH: 21' CUTTINGS COLLECTED: [X] Yes [ ] No
5. DOES WELL REPLACE EXISTING WELL? [ ] Yes [X] No
6. STATIC WATER LEVEL: 6.78 FT. [ ] above [X] below TOP OF CASING.
TOP OF CASING IS 0 FT. ABOVE LAND SURFACE
7. YIELD (gpm): NA METHOD OF TEST: NA
8. WATER ZONES (depth): NA
9. CHLORINATION: Type NA Amount NA
10. CASING:

Depth From	To	Ft.	Diameter	Wall Thickness or Weight/Ft.	Material
0	10		2"		S.S.

11. GROUT:

Depth From	To	Ft.	Material	Method
.5	6.5		Portland	
6.5	8		Bentonite	

12. SCREEN:

Depth From	To	Ft.	Diameter	Slot Size	Material
10	20.1		2" in.	.010 in.	Stainless Steel
			in.	in.	
			in.	in.	

13. GRAVEL PACK:

Depth From	To	Ft.	Size	Material
8	21		#2	Filter Sand

14. REMARKS:

DRILLING LOG

Depth From	To	Formation Description
0	3	Brown silty clay soil.
3	5	Tan brown-trace orange, medium grained, silty, loose, firm, moist.
8	10	Gray-orange tan, silty, loose wet, zone black stained organics, abundant mica, trace rock fragments.
13	15	Orange tan coarse sand, rock fragments, loose-firm, wet, trace mica, quartz, feldspars
18	20	Tan mottled w/gray, sandy saprolite, relic crystals, firm yet friable, wet.

If additional space is needed use back of form.

LOCATION SKETCH
(Show direction and distance from at least two State Roads, or other map reference points)

MONITORING WELL #9

ON MAP

I DO HEREBY CERTIFY THAT THIS WELL WAS CONSTRUCTED IN ACCORDANCE WITH 15 NCAC 2C, WELL CONSTRUCTION STANDARDS, AND THAT A COPY OF THIS RECORD HAS BEEN PROVIDED TO THE WELL OWNER.

Tom Lemm 9-1-92
SIGNATURE OF CONTRACTOR OR AGENT DATE

GW-1 REVISED 2/90

Submit original to Division of Environmental Management and copy to well owner.

ENSCI CORPORATION

FIELD DRILLING RECORD

BORING #	MW-9	LOCATION:	T.F.I. - Lenoir
START DATE:	6-10-92	COMPLETED:	6-10-92
GEOLOGIST:	T. Lennon	DRILLER:	K. Cranford
DRILL METHOD:	H.S.A.	SAMPLE METHOD:	Split Spoon
BORING DIA:	6.25"	CASING DIA:	2"
TOTAL DEPTH:	21'	CASING DEPTH:	20.1'

DEPTH		LITHOLOGIC DESCRIPTION	PENETRATION TEST RESULTS				
FROM	TO	Color,texture,structure,consistency,etc.	REC	6"	12"	18"	24"
0	3	Brown silty clay soil.					
3	5	Tan brown to trace orange	24	2	2	3	4
		ocassional bands of gray					
		(clay rich), medium grained					
		ocassionally sand, slightly					
		silty, loose to trace firm,					
		moist, abundant mica, trace					
		rock fragments, no odor.					
		PID = Out of Order.					
8	10	Gray to orange tan, poorly	24	1	2	3	6
		sorted sand occasionally					
		slightly silty, loose, wet,					
		zone of black stained					
		organics (weed or roots),					
		abundant mica, trace rock					
		fragments.					

MONITORING WELL INFORMATION (IF APPLICABLE)

RISER LENGTH(ft)_____DEPTH(ft)_____DIAMETER(in)_____MATERIAL_____
SCREEN LENGTH(ft)_____DEPTH(ft)_____DIAMETER(in)_____MATERIAL_____
DEPTH TO TOP OF SAND_____BAGS OF SAND_____
DEPTH TO TOP SEAL_____BENTONITE USED_____
BAGS OF CEMENT USED_____

ENSCI CORPORATION

FIELD DRILLING RECORD

BORING #	MW-9 (Cont'd)	LOCATION:	T.F.I. - Lenoir
START DATE:	6-10-92	COMPLETED:	6-10-92
GEOLOGIST:	T. Lennon	DRILLER:	K. Cranford
DRILL METHOD:	H.S.A.	SAMPLE METHOD:	Split Spoon
BORING DIA:	6.25"	CASING DIA:	2"
TOTAL DEPTH:	21'	CASING DEPTH:	20.1'

DEPTH		LITHOLOGIC DESCRIPTION	PENETRATION TEST RESULTS				
FROM	TO	Color,texture,structure,consistency,etc.	REC	6"	12"	18"	24"
13	15	Orange tan, predominantly	24	7	8	8	5
		coarse sands, trace silty					
		sands, some rock fragments					
		(pebbles alluvium), loose to					
		slightly firm (when more					
		silty), wet, trace mica,					
		quartz, feldspars, no odor.					
18	20	Tan mottled with gray, sandy	20	1	1	3	6
		saprolite, relic crystals					
		(feldspars & mica), relic					
		fractures filled with black					
		relic micas, firm yet					
		friable, wet, no odor.					

MONITORING WELL INFORMATION (IF APPLICABLE)

RISER LENGTH(ft) 10 DEPTH(ft) 0-10 DIAMETER(in) 2 MATERIAL Stainless Steel
SCREEN LENGTH(ft) 10 DEPTH(ft) 10-20.1 DIAMETER(in) 2 MATERIAL Stainless Steel
DEPTH TO TOP OF SAND 8 BAGS OF SAND 4
DEPTH TO TOP SEAL 6.5 BENTONITE USED 1/2
BAGS OF CEMENT USED 3

ENSCI CORPORATION

MONITORING WELL INSTALLATION SKETCH

PROJECT: T.F.I. - Lenoir

PIEZOMETER NUMBER: MW #9

GROUND ELEVATION: 1129.48

DEPTH TO WATER LEVEL: 6.78

BENCH MARK DATA: TBM 100

ELEVATION OF WATER LEVEL: 1122.70

ELEVATION OF TOP OF PIEZOMETER: 1129.48

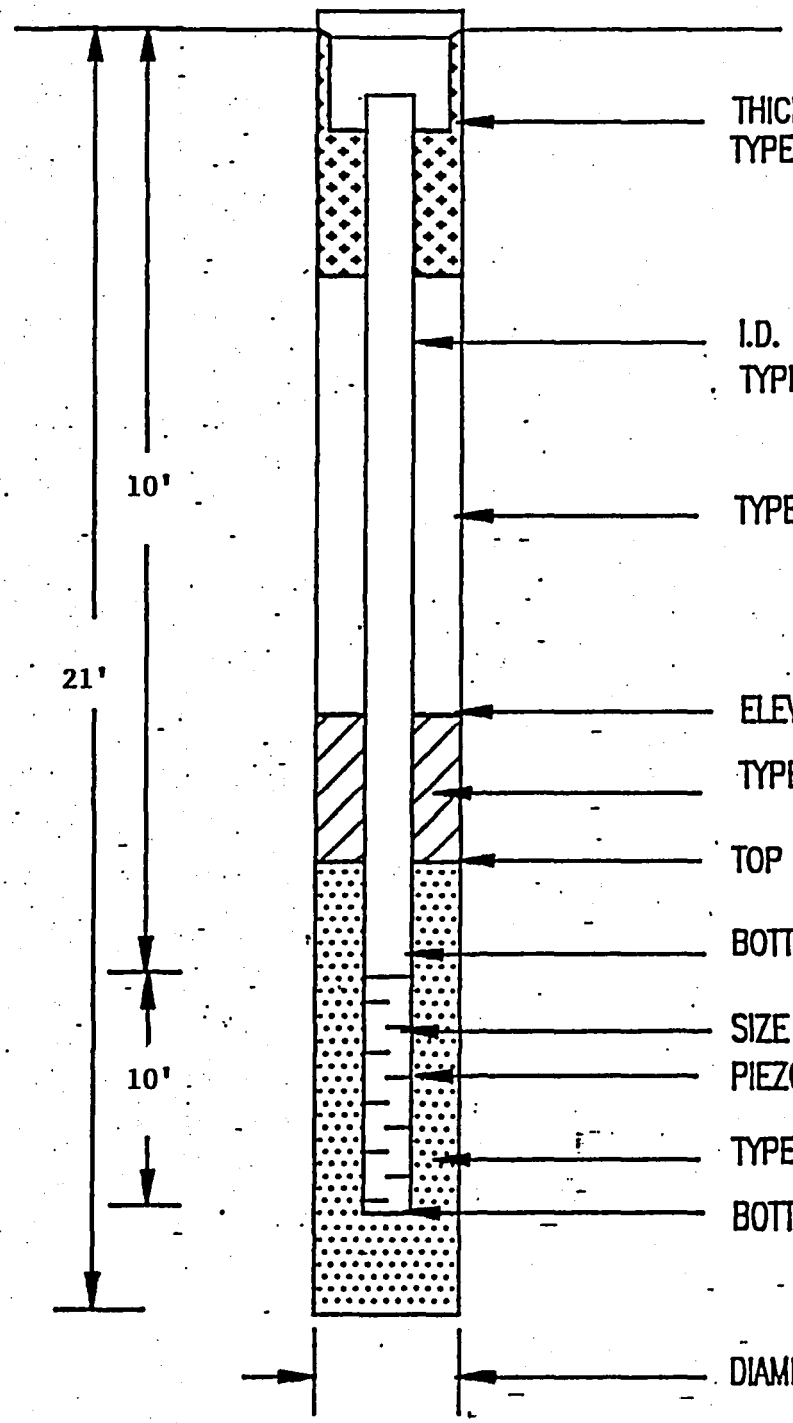

THICKNESS OF SURFACE SEAL	3'
TYPE OF SURFACE SEAL	Portland
I.D. OF RISER PIPE	2"
TYPE OF RISER PIPE	Stainless Steel
TYPE OF BACKFILL	Portland
ELEVATION OF TOP OF SEAL	1122.98
TYPE OF SEAL	Bentonite
TOP ELEVATION OF FILTER SAND	1121.48
BOTTOM ELEVATION OF RISER	1119.48
SIZE OF SCREEN OPENINGS	.010"
PIEZOMETER SCREEN DIAMETER	2"
TYPE OF FILTER SAND	#2 Filter Sand
BOTTOM ELEVATION OF PIEZOMETER	1109.38
DIAMETER OF BOREHOLE	6 1/4"

DIVISION OF ENVIRONMENTAL MANAGEMENT
P.O. BOX 27687 - RALEIGH, NC 27611-7687
PHONE (919)733-3221

Quad. No. _____ Serial No. _____
Lat. _____ Long. _____ Pc _____
Minor Basin _____
Basin Code _____
Header Ent. _____ GW-1 Ent. _____

WELL CONSTRUCTION RECORD

DRILLING CONTRACTOR Ensci

DRILLER REGISTRATION NUMBER 1233

STATE WELL CONSTRUCTION PERMIT NUMBER: 113-0221-WM-0044

1. WELL LOCATION: (Show sketch of the location below)

Nearest Town: Lenoir

County: Caldwell

(Road, Community, or Subdivision and Lot No.)

2. OWNER TFI

ADDRESS 315 Elizabeth St., NE
(Street or Route No.)

Lenoir NC
City or Town State Zip Code

3. DATE DRILLED 6/8/92 USE OF WELL Monitor GW

4. TOTAL DEPTH 21' CUTTINGS COLLECTED ☐ Yes ☐ No

5. DOES WELL REPLACE EXISTING WELL? ☐ Yes ☒ No

6. STATIC WATER LEVEL: 10.9 FT. ☐ above ☒ below TOP OF CASING.
TOP OF CASING IS 0 FT. ABOVE LAND SURFACE.

7. YIELD (gpm): NA METHOD OF TEST NA

8. WATER ZONES (depth):

9. CHLORINATION: Type NA Amount

10. CASING:

	Depth From	To	Ft.	Diameter	Wall Thickness or Weight/Ft.	Material
	0	10		2"	Sch 5	5.5

11. GROUT:

	Depth From	To	Ft.	Material	Method
	.5	6		Portland	
	6	8		Bentonite	

12. SCREEN:

	Depth From	To	Ft.	Diameter	Slot Size	Material
	10	20.14		2" in.	.010 in.	5.5
				in.	in.	
				in.	in.	

13. GRAVEL PACK:

	Depth From	To	Ft.	Size	Material
	8	21		#2	Filter Sand

14. REMARKS:

DRILLING LOG

Depth From	To	Formation Description
0	3	Asphalt & gravel, brown sandy loam.
3	5	Brown to tan-brown, sandy loam, loose-firm, moist, trac mica.
8	10	Tan to orange-tan, medium to coarse sand, loose to friabl wet, mica, quartz, feldspars
13	15	Tan brown, poorly sorted san w/ pebbles of feldspar, tan brown sand slightly firm, we
18	20	Orange, sandy loam saprolite relicfoliation, fractures, firmhard, wet, feldspars, mi

If additional space is needed use back of form.

LOCATION SKETCH
(Show direction and distance from at least two State Roads, or other map reference points)

MONITORING WELL #10

ON MAP

I DO HEREBY CERTIFY THAT THIS WELL WAS CONSTRUCTED IN ACCORDANCE WITH 15 NCAC 2C, WELL CONSTRUCTION STANDARDS, AND THAT A COPY OF THIS RECORD HAS BEEN PROVIDED TO THE WELL OWNER.

SIGNATURE OF CONTRACTOR OR AGENT 9.1.92 DATE

GW-1 REVISED 2/90

Submit original to Division of Environmental Management and copy to well owner.

ENSCI CORPORATION

FIELD DRILLING RECORD

BORING #	MW-10 (Cont'd)	LOCATION:	T.F.I. - Lenoir
START DATE:	6-8-92	COMPLETED:	6-8-92
GEOLOGIST:	T. Lennon	DRILLER:	K. Cranford
DRILL METHOD:	H.S.A.	SAMPLE METHOD:	Split Spoon
BORING DIA:	6.25"	CASING DIA:	2"
TOTAL DEPTH:	21'	CASING DEPTH:	20.14'

DEPTH		LITHOLOGIC DESCRIPTION	PENETRATION TEST RESULTS				
FROM	TO	Color,texture,structure,consistency,etc.	REC	6"	12"	18"	24"
18	20	Orange, sandy loam saprolite,	21	12	21	26	15
		relic foliation, some					
		fractures filled with black					
		material (mica), firm to					
		hard, wet, feldspars, mica,					
		no odor. PID = 0.4 ppm					

MONITORING WELL INFORMATION (IF APPLICABLE)

RISER LENGTH(ft) 10 DEPTH(ft) 0-10 DIAMETER(in) 2 MATERIAL Stainless Steel
SCREEN LENGTH(ft) 10 DEPTH(ft) 10-20.14 DIAMETER(in) 2 MATERIAL Stainless Steel
DEPTH TO TOP OF SAND 8 BAGS OF SAND 3
DEPTH TO TOP SEAL 6 BENTONITE USED 1
BAGS OF CEMENT USED 4

ENSCI CORPORATION

FIELD DRILLING RECORD

BORING #	MW-10	LOCATION:	T.F.I. - Lenoir
START DATE:	6-8-92	COMPLETED:	6-8-92
GEOLOGIST:	T. Lennon	DRILLER:	K. Cranford
DRILL METHOD:	H.S.A.	SAMPLE METHOD:	Split Spoon
BORING DIA:	6.25"	CASING DIA:	2"
TOTAL DEPTH:	21'	CASING DEPTH:	20.14'

DEPTH		LITHOLOGIC DESCRIPTION	PENETRATION TEST RESULTS				
FROM	TO	Color,texture,structure,consistency,etc.	REC	6"	12"	18"	24"
0	3	Asphalt & gravel, brown					
		sandy loam.					
3	5	Brown to tan-brown, sandy	24	3	2	2	2
		loam (medium to fine grained					
		river sands), loose to					
		slightly firm, moist, trace					
		mica, no odor. PID = .5 ppm					
8	10	Tan to orange tan, medium to	8	1	1	2	4
		coarse sand, loose to					
		friable, wet, mica, quartz,					
		feldspars, no odor.					
		PID = 1 ppm					
13	15	Tan brown occasionally	24	1	2	3	13
		streaked with gray (sandy					
		loam), predominantly poorly					
		sorted sands with pebbles of					
		feldspar (alluvium), tan					
		brown sand loose while gray					
		loam is slightly firm, wet,					
		no odor, mica. PID = 0.6 ppm					

MONITORING WELL INFORMATION (IF APPLICABLE)

RISER LENGTH(ft)_____DEPTH(ft)_____DIAMETER(in)_____MATERIAL_____
SCREEN LENGTH(ft)_____DEPTH(ft)_____DIAMETER(in)_____MATERIAL_____
DEPTH TO TOP OF SAND_____BAGS OF SAND_____
DEPTH TO TOP SEAL_____BENTONITE USED_____
BAGS OF CEMENT USED_____

ENSCI CORPORATION

MONITORING WELL INSTALLATION SKETCH

PROJECT: T.F.I. - Lenoir

PIEZOMETER NUMBER: MW #10

GROUND ELEVATION: 1129.34

DEPTH TO WATER LEVEL: 10.9

BENCH MARK DATA: TBM 100

ELEVATION OF WATER LEVEL: 1118.44

ELEVATION OF TOP OF PIEZOMETER: 1129.34

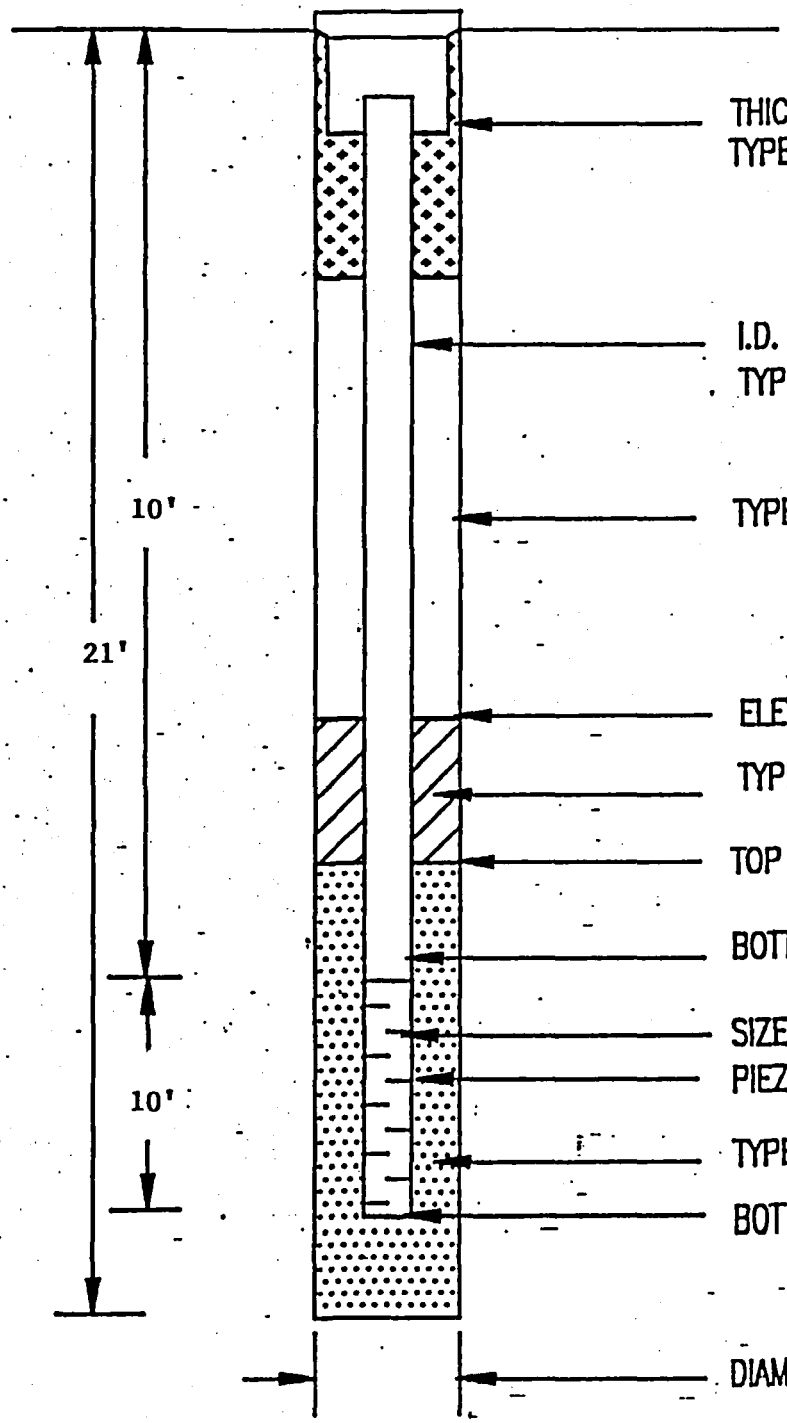

THICKNESS OF SURFACE SEAL	3'
TYPE OF SURFACE SEAL	Portland
I.D. OF RISER PIPE	2"
TYPE OF RISER PIPE	Stainless Steel
TYPE OF BACKFILL	Portland
ELEVATION OF TOP OF SEAL	1123.34
TYPE OF SEAL	Bentonite
TOP ELEVATION OF FILTER SAND	1121.34
BOTTOM ELEVATION OF RISER	1119.34
SIZE OF SCREEN OPENINGS	.010"
PIEZOMETER SCREEN DIAMETER	2"
TYPE OF FILTER SAND	#2 Filter Sand
BOTTOM ELEVATION OF PIEZOMETER	1109.20
DIAMETER OF BOREHOLE	6 1/4"

DIVISION OF ENVIRONMENTAL MANAGEMENT - GROUNDWATER SECTION
P.O. BOX 27687 - RALEIGH, NC 27611-7687
PHONE (919)733-3221

FOR OFFICE USE ONLY

Quad. No. _____ Serial No. _____
Lat. _____ Long. _____ Pc _____
Minor Basin _____
Basin Code _____
Header Ent. _____ GW-1 Ent. _____

WELL CONSTRUCTION RECORD

DRILLING CONTRACTOR Ensci

DRILLER REGISTRATION NUMBER 1233

STATE WELL CONSTRUCTION PERMIT NUMBER: 13-0221-WM-0044

1. WELL LOCATION: (Show sketch of the location below)

Nearest Town: Lenoir County: Caldwell

(Road, Community, or Subdivision and Lot No.)

2. OWNER TFI

ADDRESS 315 Elizabeth St., NW (Street or Route No.)

Lenoir NC
City or Town State Zip Code

3. DATE DRILLED 6-9-92 USE OF WELL Monitor GW

4. TOTAL DEPTH 16' CUTTINGS COLLECTED ☐ Yes ☐ No

5. DOES WELL REPLACE EXISTING WELL? ☐ Yes ☒ No

6. STATIC WATER LEVEL: 9.0 FT. ☐ above ☒ below TOP OF CASING.

TOP OF CASING IS 0 FT. ABOVE LAND SURFACE

7. YIELD (gpm): NA METHOD OF TEST NA

8. WATER ZONES (depth):

9. CHLORINATION: Type NA Amount

10. CASING:

	Depth From	To	Ft.	Diameter	Wall Thickness or Weight/Ft.	Material
	0	5		2"	.010	Stainless Steel

11. GROUT:

	Depth From	To	Ft.	Material	Method
	.5	3		Portland	
	3	4		Bentonite	

12. SCREEN:

	Depth From	To	Ft.	Diameter	in.	Slot Size	in.	Material
	5	15.2		2"		.010		Stainless Steel

13. GRAVEL PACK:

	Depth From	To	Ft.	Size	Material
	4	16		#2	Filter Sand

14. REMARKS:

DRILLING LOG

Depth From	To	Formation Description
3	5	Brown, fine-med. grain sands w/silt, firm, moist, trace mi feldspar rock fragments.
8	10	Tan to brownish tan, coarse coarse sands, slightly silty. Rock frag. or pebbles, loose-firm, wet.
13	15	Tan to orange brown, sandy loam saprolite, relic foliati fractures; loose-friable.
14		Auger refusal.
14	16	Roller Cone.

If additional space is needed use back of form.

LOCATION SKETCH
(Show direction and distance from at least two State Roads, or other map reference points)

MONITORING WELL #11

ON MAP

I DO HEREBY CERTIFY THAT THIS WELL WAS CONSTRUCTED IN ACCORDANCE WITH 15 NCAC 2C, WELL CONSTRUCTION STANDARDS, AND THAT A COPY OF THIS RECORD HAS BEEN PROVIDED TO THE WELL OWNER.

Jim Lem 9.1.92

SIGNATURE OF CONTRACTOR OR AGENT DATE

GW-1 REVISED 2/90

Submit original to Division of Environmental Management and copy to well owner.

ENSCI CORPORATION

FIELD DRILLING RECORD

BORING #	MW-11	LOCATION:	TFI Lenoir
START DATE:	6-9-92	COMPLETED:	6-10-92
GEOLOGIST:	T. Lennon	DRILLER:	K. Cranford
DRILL METHOD:	HSA/Roller cone	SAMPLE METHOD:	Split Spoon
BORING DIA:	6.25"	CASING DIA:	2"
TOTAL DEPTH:	16	CASING DEPTH:	15.2

DEPTH		LITHOLOGIC DESCRIPTION	PENETRATION TEST RESULTS				
FROM	TO	Color,texture,structure,consistency,etc.	REC	6"	12"	18"	24"
3	5	Brown, fine to medium grain	20"				
		sands with a trace amount					
		of silt, firm, moist, trace					
		mica, trace feldspar rock					
		fragments.					
8	10	Tan to brownish tan, coarse	10"				
		sands. Occasionally slightly					
		silty: Some rock fragments or					
		pebbles (alluvium) loose to					
		moderately firm (silty), wet					
		no odor, PID=0 ppm.					
13	15	Tan to orange brown, sandy	6"				
		loam saprolite, relic folia-					
		tions, fractures filled with					
		black material (relic mica)					
		loose - friable, no odor, PID=0 ppm.					
14		Auger refusal					
14	16	Roller cone					

MONITORING WELL INFORMATION (IF APPLICABLE)

RISER LENGTH(ft) 5 DEPTH(ft) 0-5 DIAMETER(in) 2" MATERIAL Stainless Steel SCREEN LENGTH(ft) 10 DEPTH(ft) 5-15.2 DIAMETER(in) 2"
MATERIAL Stainless Steel DEPTH TO TOP OF SAND 4 BAGS OF SAND 6
DEPTH TO TOP SEAL 3 BENTONITE USED 1 BAGS OF CEMENT USED 2.5

ENSCI CORPORATION

MONITORING WELL INSTALLATION SKETCH

PROJECT: T.F.I. - Lenoir

PIEZOMETER NUMBER: MW #11

GROUND ELEVATION: 1128.74

DEPTH TO WATER LEVEL: 9.0

BENCH MARK DATA: TBM 100

ELEVATION OF WATER LEVEL: 1119.74

ELEVATION OF TOP OF PIEZOMETER: 1128.74

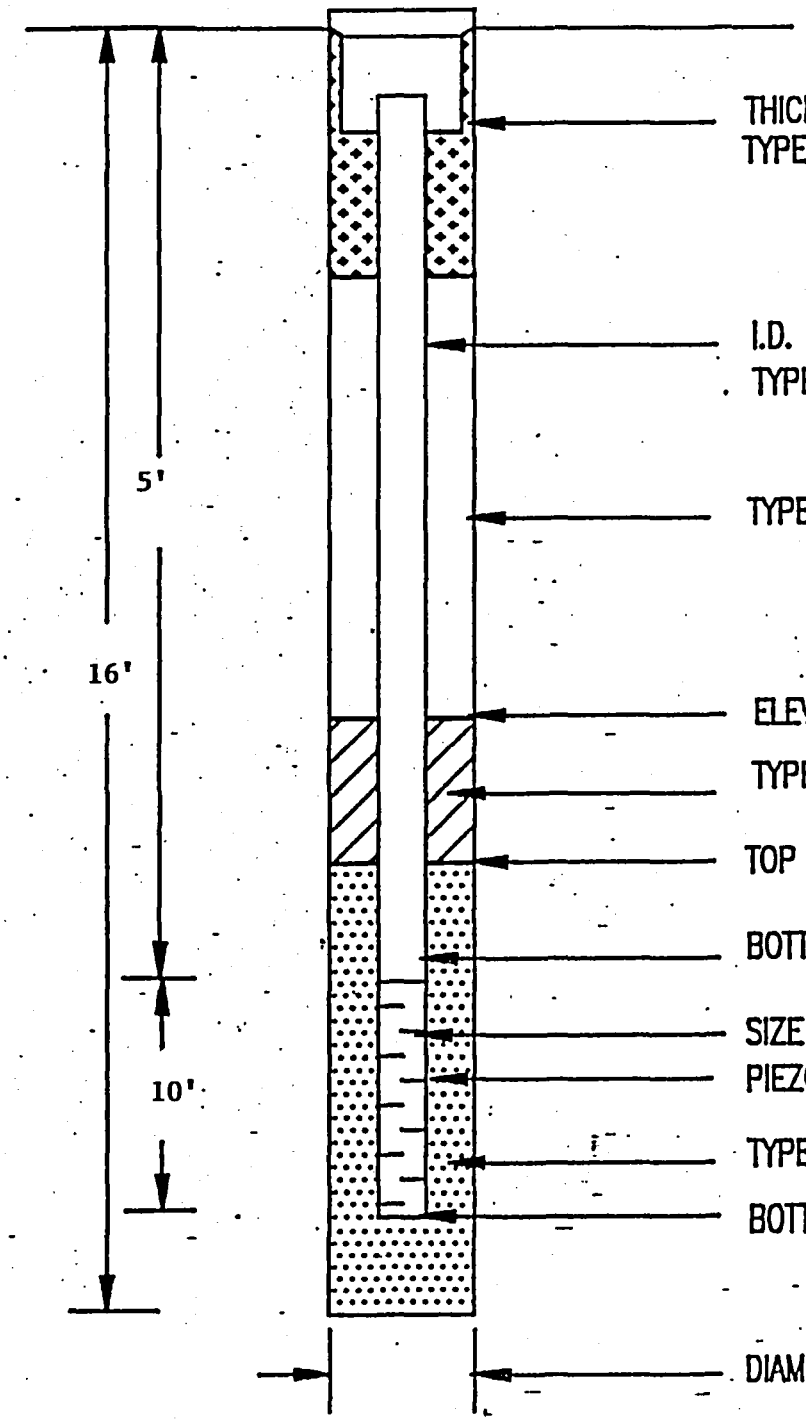

THICKNESS OF SURFACE SEAL	3'
TYPE OF SURFACE SEAL	Portland
I.D. OF RISER PIPE	2"
TYPE OF RISER PIPE	Stainless Steel
TYPE OF BACKFILL	Portland
ELEVATION OF TOP OF SEAL	1125.74
TYPE OF SEAL	Bentonite
TOP ELEVATION OF FILTER SAND	1124.74
BOTTOM ELEVATION OF RISER	1123.74
SIZE OF SCREEN OPENINGS	.010"
PIEZOMETER SCREEN DIAMETER	2"
TYPE OF FILTER SAND	#2 Filter Sand
BOTTOM ELEVATION OF PIEZOMETER	1113.54
DIAMETER OF BOREHOLE	6 1/4"

DIVISION OF ENVIRONMENTAL MANAGEMENT - GROUND WATER SECTION
P.O. BOX 27687 - RALEIGH, NC 27611-7687
PHONE (919)733-3221

Quad. No. _____ Serial No. _____
Lat. _____ Long. _____ Pc _____
Minor Basin _____
Basin Code _____
Header Ent. _____ GW-1 Ent. _____

WELL CONSTRUCTION RECORD

DRILLING CONTRACTOR Ensci

DRILLER REGISTRATION NUMBER 1233

STATE WELL CONSTRUCTION PERMIT NUMBER: 13-0221-WM-0044

1. WELL LOCATION: (Show sketch of the location below)

Nearest Town: Lenoir County: Caldwell

(Road, Community, or Subdivision and Lot No.)

2. OWNER TFI

ADDRESS 315 Elizabeth St. NW
(Street or Route No.)

Lenoir NC
City or Town State Zip Code

3. DATE DRILLED 6/8/92 USE OF WELL Monitor GW

4. TOTAL DEPTH 21' CUTTINGS COLLECTED ☐ Yes ☐ No

5. DOES WELL REPLACE EXISTING WELL? ☐ Yes ☒ No

6. STATIC WATER LEVEL: 8.73 FT. ☐ above ☒ below TOP OF CASING.
TOP OF CASING IS 0 FT. ABOVE LAND SURFACE

7. YIELD (gpm): NA METHOD OF TEST NA

8. WATER ZONES (depth): NA

9. CHLORINATION: Type NA Amount _____

10. CASING:

	Depth		Diameter	Wall Thickness or Weight/Ft.	Material
From 0	To 10	Ft.	2"	.010	5.5
From	To	Ft.			
From	To	Ft.			

11. GROUT:

	Depth		Material	Method
From .5	To 6	Ft.	Portland	
From 6	To 8	Ft.	Bentonite	

12. SCREEN:

	Depth		Diameter	Slot Size	Material
From 10	To 20.15	Ft.	2" in.	.010 in.	5.5
From	To	Ft.	in.	in.	
From	To	Ft.	in.	in.	

13. GRAVEL PACK:

	Depth		Size	Material
From 8	To 21	Ft.	#2	Filter Sand
From	To	Ft.		

14. REMARKS:

Depth From	To	DRILLING LOG Formation Description
3	5	Tan-tan brown, fine-medium grained sand, trace loam, lo moist; trace mica & pebbles.
8	10	Tan-tan brown, coarse sand, trace pebbles, friable, mois mica, trace quartz.
13	15	Tan brown grading into orange poorly sorted sands, loose-firm, wet, trace rock frag., bordering on saprolite.
18	20	Orange - gray, sandy loam saprolite, relic foliation or fractures; relic feldspa crystals, firm, wet, mica.

If additional space is needed use back of form.

LOCATION SKETCH
(Show direction and distance from at least two State Roads, or other map reference points)

MONITORING WELL #12

ON MAP

I DO HEREBY CERTIFY THAT THIS WELL WAS CONSTRUCTED IN ACCORDANCE WITH 15 NCAC 2C, WELL CONSTRUCTION STANDARDS, AND THAT A COPY OF THIS RECORD HAS BEEN PROVIDED TO THE WELL OWNER.

Jim [signature] 9.1.92
SIGNATURE OF CONTRACTOR OR AGENT DATE

GW-1 REVISED 2/90

Submit original to Division of Environmental Management and copy to well owner.

ENSCI CORPORATION

FIELD DRILLING RECORD

BORING #	MW-12	LOCATION:	TFI Lenoir
START DATE:	6-8-92	COMPLETED:	6-8-92
GEOLOGIST:	T. Lennon	DRILLER:	K. Cranford
DRILL METHOD:	HSA	SAMPLE METHOD:	Split Spoon
BORING DIA:	6.25"	CASING DIA:	2"
TOTAL DEPTH:	21	CASING DEPTH:	20.15

DEPTH		LITHOLOGIC DESCRIPTION	PENETRATION TEST RESULTS				
FROM	TO	Color,texture,structure,consistency,etc.	REC	6"	12"	18"	24"
3	5	Tan to tan brown trace dark	20"	2	3	3	4
		brown and orange, fine-medium					
		grained sand trace sandy loam					
		loose, moist, trace mica,					
		trace pebbles (alluvium),					
		PID = o ppm.					
8	10	Tan to tan brown, pre-	12	3	4	3	
		dominantly coarse sand trace					
		pebbles (alluvium), fiable,					
		moist, mica, trace quartz,					
		no odor, PID = o ppm.					
13	15	Tan brown grading into					
		orange, poorly sorted sands					
		(predominantly coarse grained)					
		Loose to form, wet, trace					
		rock fragments. Seems to be					
		bordering on saprolite, no					
		odor. PID = 0 ppm.					
18	20	Orange grading into gray-	10"	5	4	4	5
		brown, sandy loam saprolite,					
		relic foliation or fractures					
		filled with black material relic micas), relic feldspar crystals, firm, wet, mica, no odor, PID = 0 ppm.					

MONITORING WELL INFORMATION (IF APPLICABLE)

RISER LENGTH(ft) 10 DEPTH(ft) 0-10 DIAMETER(in) 2" MATERIAL Stainless Steel SCREEN LENGTH(ft) 10 DEPTH(ft) 10-20 DIAMETER(in) 2" MATERIAL Stainless Steel DEPTH TO TOP OF SAND 8 BAGS OF SAND 2
DEPTH TO TOP SEAL 6 BENTONITE USED 1 BAGS OF CEMENT USED 5

ENSCI CORPORATION

MONITORING WELL INSTALLATION SKETCH

PROJECT: T.F.I. - Lenoir

PIEZOMETER NUMBER: MW #12

GROUND ELEVATION: 1129.10

DEPTH TO WATER LEVEL: 8.73

BENCH MARK DATA: TBM 100

ELEVATION OF WATER LEVEL: 1120.37

ELEVATION OF TOP OF PIEZOMETER: 1129.10

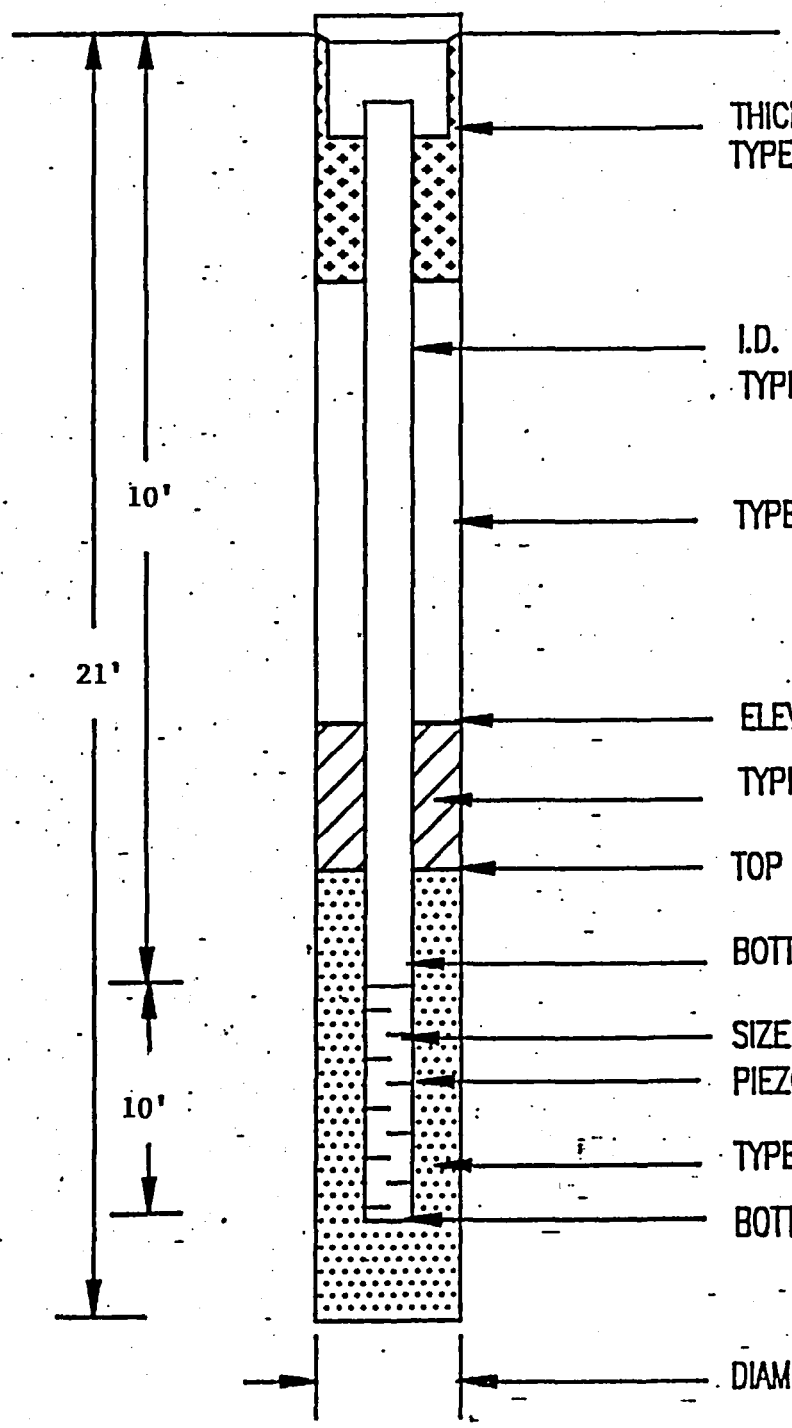

THICKNESS OF SURFACE SEAL	3'
TYPE OF SURFACE SEAL	Portland
I.D. OF RISER PIPE	2"
TYPE OF RISER PIPE	Stainless Steel
TYPE OF BACKFILL	Portland
ELEVATION OF TOP OF SEAL	1123.10
TYPE OF SEAL	Bentonite
TOP ELEVATION OF FILTER SAND	1121.10
BOTTOM ELEVATION OF RISER	1119.10
SIZE OF SCREEN OPENINGS	.010"
PIEZOMETER SCREEN DIAMETER	2"
TYPE OF FILTER SAND	#2 Filter Sand
BOTTOM ELEVATION OF PIEZOMETER	1108.95
DIAMETER OF BOREHOLE	6 1/4"

DIVISION OF ENVIRONMENTAL MANAGEMENT - GROUNDWATER SECTION
P.O. BOX 27687 - RALEIGH, NC 27611-7687
PHONE (919)733-3221

Quad. No. _____ Serial No. _____
Lat. _____ Long. _____ Pc _____
Minor Basin _____
Basin Code _____
Header Ent. _____ GW-1 Ent. _____

WELL CONSTRUCTION RECORD

DRILLING CONTRACTOR ENSCI

DRILLER REGISTRATION NUMBER 1233

STATE WELL CONSTRUCTION PERMIT NUMBER: 13-0221-WM-0044

1. WELL LOCATION: (Show sketch of the location below)

Nearest Town: Lenoir County: Caldwell

(Road, Community, or Subdivision and Lot No.)

2. OWNER TFI

ADDRESS 315 Elizabeth St., NW
(Street or Route No.)

Lenoir NC
City or Town State Zip Code

3. DATE DRILLED 6/8/92 USE OF WELL _____

4. TOTAL DEPTH 40' CUTTINGS COLLECTED ☐ Yes ☐ No

5. DOES WELL REPLACE EXISTING WELL? ☐ Yes ☒ No

6. STATIC WATER LEVEL: 8.94 FT. ☐ above ☒ below TOP OF CASING.

TOP OF CASING IS 0 FT. ABOVE LAND SURFACE.

7. YIELD (gpm): NA METHOD OF TEST NA

8. WATER ZONES (depth): NA

9. CHLORINATION: Type NA Amount _____

10. CASING:

	Depth From	To	Ft.	Diameter	Wall Thickness or Weight/Ft.	Material
	0	25		2"	Sch 5	5.5
	0	20-		4"	Sch 40	PVC

11. GROUT:

	Depth From	To	Ft.	Material	Method
	.5	15		Portland	
	15	18		Bentonite	

12. SCREEN:

	Depth From	To	Ft.	Diameter	Slot Size	Material
	25	40		2" in.	.010 in.	5.5
				in.	in.	
				in.	in.	

13. GRAVEL PACK:

	Depth From	To	Ft.	Size	Material
	18	40		#2	Filter Sand

DRILLING LOG

Depth From	To	Formation Description
3	5	Brown-slightly orange brown, sand to silty sand, trace cla loose to firm where clay rich moist, trace organics.
8	10	Tan-tan brown into dk brown, poorly grade sands, loose to friable, wet, abundant mica, quartz & feldspars.
13	15	Tan grading into gray, poorly sorted river sands, trace sil loose, wet, trace mica, quart feldspars.
18	20	Auger refusal at 20 ft.
20	40	Roller cone, gray/white Metamorphose amphibolite.

If additional space is needed use back of form.

LOCATION SKETCH

(Show direction and distance from at least two State Roads, or other map reference points)

MONITORING WELL #13

ON MAP

14. REMARKS:

I DO HEREBY CERTIFY THAT THIS WELL WAS CONSTRUCTED IN ACCORDANCE WITH 15 NCAC 2C, WELL CONSTRUCTION STANDARDS, AND THAT A COPY OF THIS RECORD HAS BEEN PROVIDED TO THE WELL OWNER.

Jim Lum 9.1.92

SIGNATURE OF CONTRACTOR OR AGENT DATE

GW-1 REVISED 2/90

Submit original to Division of Environmental Management and copy to well owner.

ENSCI CORPORATION

FIELD DRILLING RECORD

BORING #	MW-13	LOCATION:	TFI Lenoir
START DATE:	6-8-92	COMPLETED:	6-10-92
GEOLOGIST:	T Lennon	DRILLER:	K. Cranford
DRILL METHOD:	HSA/Roller cone	SAMPLE METHOD:	Split Spoon
BORING DIA:	10.75"	CASING DIA:	4" pit casing/2" Stainless Steel
TOTAL DEPTH:	40	CASING DEPTH:	40.00

DEPTH		LITHOLOGIC DESCRIPTION	PENETRATION TEST RESULTS				
FROM	TO	Color,texture,structure,consistency,etc.	REC	6"	12"	18"	24"
3	5	Brown to slightly orange	24"	3	2	2	3
		brown, sand to silty sand					
		trace clay, loose to firm					
		where clay rich, moist, trace					
		organics.					
8	10	Tan to tan brown grades into	12	1	1	1	1
		dark brown, poorly grade					
		sands (dark brown), loose to					
		friable, wet, abundant mica,					
		quartz and feldspars (alluvium), no odor. .6 ppm.					
13	15	Tan grading into gray, poorly	24	2	1	1	1
		sorted river sands trace					
		silty (gray), loose, wet,					
		trace mica, quartz, occasional feldspars.					
18	20	As above/Auger refusal at	3	35	20	12	
		20 feet.					
20	40	Roller cone: Gray and white					
		Metamorphose Amphibolite.					

MONITORING WELL INFORMATION (IF APPLICABLE)

RISER LENGTH(ft) 25 DEPTH(ft) 0-25 DIAMETER(in) 2" MATERIAL Stainless Steel
SCREEN LENGTH(ft) 15 DEPTH(ft) 25-40 DIAMETER(in) 2" MATERIAL Stainless Steel
DEPTH TO TOP OF SAND 18 BAGS OF SAND 3
DEPTH TO TOP SEAL 15 BENTONITE USED 1½
BAGS OF CEMENT USED 10

ENSCI
ENVIRONMENTAL SERVICES GROUP
HIGH POINT, NORTH CAROLINA

TYPE III MONITORING WELL

MW #13

Groundwater 8.94'

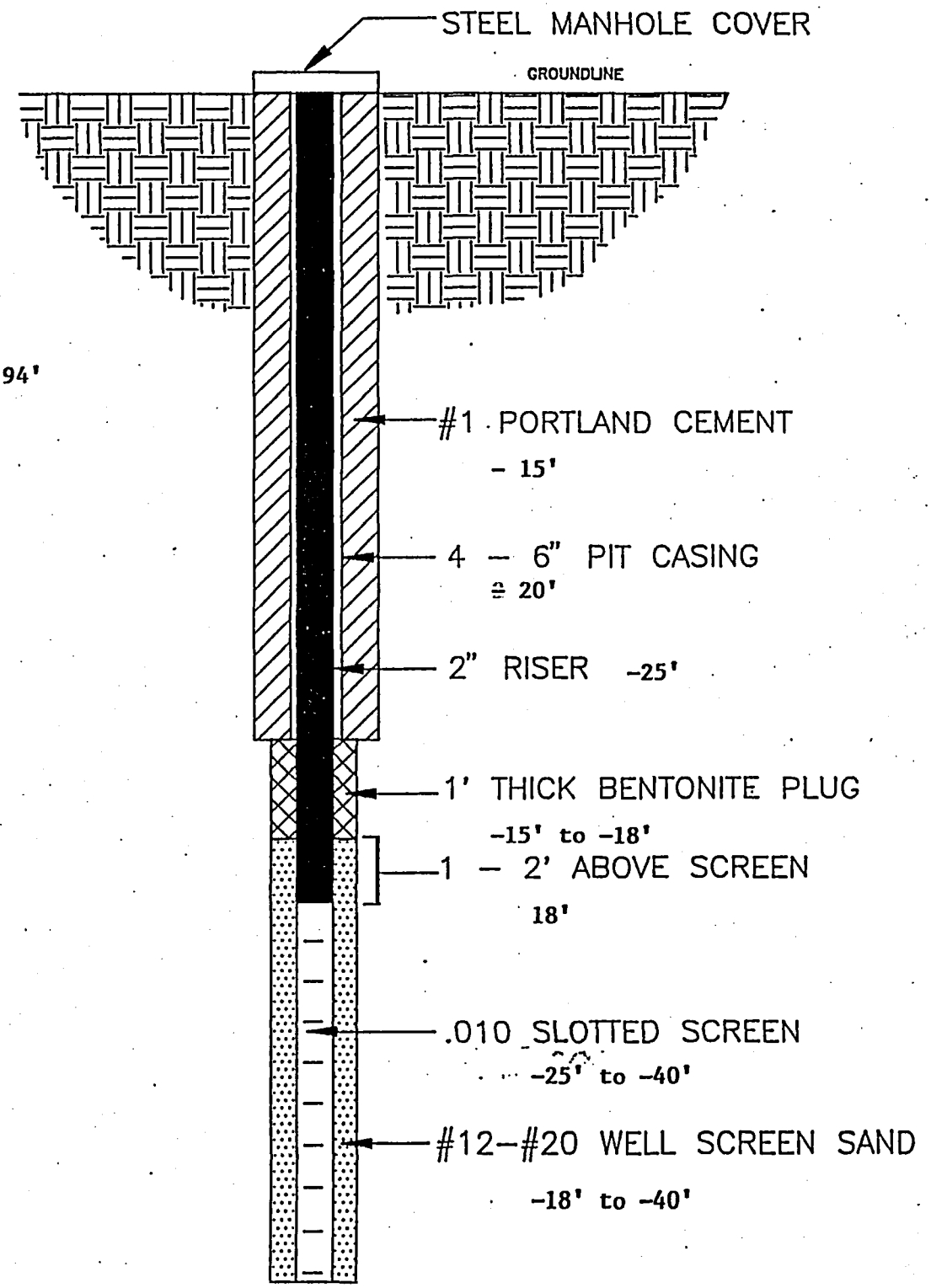

ENSCI CORPORATION

FIELD DATA SHEET FOR GROUNDWATER SAMPLING

DATE 6/11/92
FIELD PERSONNEL T. Scott
FACILITY NAME T.F.I Lenoir
EPA ID NO.
WELL ID NO. MW-1

☒ UPGRADIENT ☐ DOWNGRADIENT

WEATHER CONDITIONS RAINY/CLEAR/WINDY/PARTLY CLOUDY/WARM/HOT
AIR TEMPERATURE 85 °F
TOTAL WELL DEPTH (TWD) 20.27 1/100 ft
DEPTH TO GROUNDWATER (DGW) 9.10 1/100 ft
LENGTH OF WATER COLUMN (LWC) = TWD − DGW = 11.17 ft
1 CASING VOLUME (OCV) = LWC X .163 = 1.82 gal
3 CASING VOLUMES = 5.4 GAL = STD EVACUATION VOLUME
METHOD OF WELL EVACUATION SUBMERSIBLE PUMP/GEL T BAILER/B-K PUMP
METHOD OF SAMPLE COLLECTION DEDICATED T BAILER/GEL T BAILER/B-K BAILER
TOTAL VOLUME OF WATER REMOVED 5.4 gal

CASING DIAMETER ☒ 2 INCHES ☐ 4 INCHES
CASING MATERIAL ☐ PVC ☐ TEFLON ☒ STEEL
MEASURING POINT ELEVATION (MSL) 1127 1/100 ft
WATER TABLE ELEVATION (MSL) 1118 1/100 ft
pH/SPECIAL CONDITION METER CAL (DATE/TIME) litmus
pH BUFFER SOLUTION USED
STEEL GUARD PIPE AROUND CASING ☐ YES ☒ NO
LOCKING CAP ☐ YES ☒ NO
PROTECTIVE ABUTMENT ☒ YES ☐ NO
WELL INTEGRITY SATISFACTORY ☒ YES ☐ NO
WELL YIELD ☐ LOW ☒ MEDIUM ☐ HIGH

CONTAINERS

PERSONNEL	DATE	TIME	NO.	TYPE	PRESERV	PARAMETER

FIELD ANALYSIS

VOLUME PURGED (GAL.)	0-6						
TIME (MILITARY)	1300						
pH (S.U.)							
CONDUCTIVITY	6.5						
WATER TEMP (C)							
TURBIDITY (SUBJECTIVE)*							
ODOR (SUBJECTIVE)**	0						
	4						

* (1) clear (2) slight (3) moderate (4) high ** (1) none (2) faint (3) moderate (4) high

ENSCI CORPORATION

FIELD DATA SHEET FOR GROUNDWATER SAMPLING

DATE 6/11/92
FIELD PERSONNEL Lennon
FACILITY NAME TFI Lenoir
EPA ID NO.
WELL ID NO. MW-2

☐ UPGRADIENT ☒ DOWNGRADIENT

WEATHER CONDITIONS RAINY/CLEAR/WINDY/PARTLY CLOUDY/WARM/HOT
AIR TEMPERATURE 85 °F
TOTAL WELL DEPTH (TWD) 10.25 1/100 ft
DEPTH TO GROUNDWATER (DGW) 7.35 1/100 ft
LENGTH OF WATER COLUMN (LWC) = TWD − DGW = 2.9 ft
1 CASING VOLUME (OCV) = LWC X .163 = .47 gal
3 CASING VOLUMES = 1.4 GAL = STD EVACUATION VOLUME
METHOD OF WELL EVACUATION SUBMERSIBLE PUMP/GEL T BAILER/B-K PUMP
METHOD OF SAMPLE COLLECTION DEDICATED T BAILER/GEL T BAILER/B-K BAILER
TOTAL VOLUME OF WATER REMOVED 2 gal

CASING DIAMETER ☒ 2 INCHES ☐ 4 INCHES
CASING MATERIAL ☐ PVC ☐ TEFLON ☒ STEEL
MEASURING POINT ELEVATION (MSL) 1125 1/100 ft
WATER TABLE ELEVATION (MSL) 1118 1/100 ft
pH/SPECIAL CONDITION METER CAL (DATE/TIME)
pH BUFFER SOLUTION USED
STEEL GUARD PIPE AROUND CASING ☐ YES ☒ NO
LOCKING CAP ☐ YES ☒ NO
PROTECTIVE ABUTMENT ☐ YES ☐ NO
WELL INTEGRITY SATISFACTORY ☐ YES ☐ NO
WELL YIELD ☐ LOW ☐ MEDIUM ☐ HIGH

CONTAINERS

PERSONNEL	DATE	TIME	NO.	TYPE	PRESERV	PARAMETER

FIELD ANALYSIS

VOLUME PURGED (GAL)	0-2						
TIME (MILITARY)							
pH (S.U.)	200						
CONDUCTIVITY	7						
WATER TEMP (C)							
TURBIDITY (SUBJECTIVE)*							
ODOR (SUBJECTIVE)**	3						
	0						

* (1) clear (2) slight (3) moderate (4) high ** (1) none (2) faint (3) moderate (4) high

ENSCI CORPORATION

FIELD DATA SHEET FOR GROUNDWATER SAMPLING

DATE 6/11/92
FIELD PERSONNEL Lennon
FACILITY NAME TFI Lenoir
EPA ID NO.
WELL ID NO. MW-3

☒ UPGRADIENT ☐ DOWNGRADIENT

WEATHER CONDITIONS RAINY/CLEAR/WINDY/PARTLY CLOUDY/WARM/HOT
AIR TEMPERATURE 85 °F
TOTAL WELL DEPTH (TWD) 15.25 1/100 ft
DEPTH TO GROUNDWATER (DGW) 7.34 1/100 ft
LENGTH OF WATER COLUMN (LWC) = TWD − DGW = 7.91 ft
1 CASING VOLUME (OCV) = LWC X .163 = 1.28 gal
3 CASING VOLUMES = 3.86 GAL = STD EVACUATION VOLUME
METHOD OF WELL EVACUATION SUBMERSIBLE PUMP/GEL T BAILER/B-K PUMP
METHOD OF SAMPLE COLLECTION DEDICATED T BAILER/GEL T BAILER/B-K BAILER
TOTAL VOLUME OF WATER REMOVED 4.0 gal

CASING DIAMETER ☒ 2 INCHES ☐ 4 INCHES
CASING MATERIAL ☐ PVC ☐ TEFLON ☒ STEEL
MEASURING POINT ELEVATION (MSL) 1125 1/100 ft
WATER TABLE ELEVATION (MSL) 1117 1/100 ft
pH/SPECIAL CONDITION METER CAL (DATE/TIME) 6/11 500
pH BUFFER SOLUTION USED 7
STEEL GUARD PIPE AROUND CASING ☐ YES ☒ NO
LOCKING CAP ☐ YES ☒ NO
PROTECTIVE ABUTMENT ☒ YES ☐ NO
WELL INTEGRITY SATISFACTORY ☒ YES ☐ NO
WELL YIELD ☐ LOW ☒ MEDIUM ☐ HIGH

CONTAINERS

PERSONNEL	DATE	TIME	NO.	TYPE	PRESERV	PARAMETER

FIELD ANALYSIS

VOLUME PURGED (GAL)	0-4						
TIME (MILITARY)							
pH (S.U.)	7.05						
CONDUCTIVITY							
WATER TEMP (C)							
TURBIDITY (SUBJECTIVE)*	4						
ODOR (SUBJECTIVE)**	4						

* (1) clear (2) slight (3) moderate (4) high ** (1) none (2) faint (3) moderate (4) high

ENSCI CORPORATION

FIELD DATA SHEET FOR GROUNDWATER SAMPLING

DATE 6/11/92
FIELD PERSONNEL K. Cranford
FACILITY NAME TFI Lenoir
EPA ID NO.
WELL ID NO. MW-4

☐ UPGRADIENT ☒ DOWNGRADIENT

WEATHER CONDITIONS RAINY/CLEAR/WINDY/PARTLY CLOUDY/WARM/HOT
AIR TEMPERATURE 85 °F
TOTAL WELL DEPTH (TWD) 15.0 1/100 ft
DEPTH TO GROUNDWATER (DGW) 5.59 1/100 ft
LENGTH OF WATER COLUMN (LWC) = TWD − DGW = 9.4 ft
1 CASING VOLUME (OCV) = LWC X .163 = 1.53 gal
3 CASING VOLUMES = 4.6 GAL = STD EVACUATION VOLUME
METHOD OF WELL EVACUATION SUBMERSIBLE PUMP/GEL T BAILER/B-K PUMP
METHOD OF SAMPLE COLLECTION DEDICATED T BAILER/GEL T BAILER/B-K BAILER
TOTAL VOLUME OF WATER REMOVED 5 gal

CASING DIAMETER ☒ 2 INCHES ☐ 4 INCHES
CASING MATERIAL ☐ PVC ☐ TEFLON ☒ STEEL
MEASURING POINT ELEVATION (MSL) 1122 1/100 ft
WATER TABLE ELEVATION (MSL) 1117 1/100 ft
pH/SPECIAL CONDITION METER CAL (DATE/TIME)
pH BUFFER SOLUTION USED
STEEL GUARD PIPE AROUND CASING ☐ YES ☒ NO
LOCKING CAP ☐ YES ☒ NO
PROTECTIVE ABUTMENT ☒ YES ☐ NO
WELL INTEGRITY SATISFACTORY ☒ YES ☐ NO
WELL YIELD ☐ LOW ☒ MEDIUM ☐ HIGH

CONTAINERS

PERSONNEL	DATE	TIME	NO.	TYPE	PRESERV	PARAMETER

FIELD ANALYSIS

	0-2.5	2.5-5					
VOLUME PURGED (GAL.)							
TIME (MILITARY)							
pH (S.U.)							
CONDUCTIVITY							
WATER TEMP (C)							
TURBIDITY (SUBJECTIVE)*	3	3					
ODOR (SUBJECTIVE)**	3	3					

* (1) clear (2) slight (3) moderate (4) high ** (1) none (2) faint (3) moderate (4) high

ENSCI CORPORATION

FIELD DATA SHEET FOR GROUNDWATER SAMPLING

DATE 6/11/92
FIELD PERSONNEL Lennon
FACILITY NAME TFI Lenoir
EPA ID NO.
WELL ID NO. MW-5

☐ UPGRADIENT ☒ DOWNGRADIENT

WEATHER CONDITIONS RAINY/CLEAR/HEAVY/PARTLY CLOUDY/WARM/HOT
AIR TEMPERATURE 85 °F
TOTAL WELL DEPTH (TWD) 15 1/100 ft
DEPTH TO GROUNDWATER (DGW) 5.74 1/100 ft
LENGTH OF WATER COLUMN (LWC) = TWD − DGW = 9.26 ft
1 CASING VOLUME (OCV) = LWC X .163 = 1.5 gal
3 CASING VOLUMES = 4.5 GAL = STD EVACUATION VOLUME
METHOD OF WELL EVACUATION SUBMERSIBLE PUMP/GEL T BAILER/B-K PUMP
METHOD OF SAMPLE COLLECTION DEDICATED T BAILER/GEL T BAILER/B-K BAILER
TOTAL VOLUME OF WATER REMOVED 4.5 gal

CASING DIAMETER ☒ 2 INCHES ☐ 4 INCHES
CASING MATERIAL ☐ PVC ☐ TEFLON ☒ STEEL
MEASURING POINT ELEVATION (MSL) 1122 1/100 ft
WATER TABLE ELEVATION (MSL) 1117 1/100 ft
pH/SPECIAL CONDITION METER CAL (DATE/TIME)
pH BUFFER SOLUTION USED
STEEL GUARD PIPE AROUND CASING ☐ YES ☒ NO
LOCKING CAP ☐ YES ☒ NO
PROTECTIVE ABUTMENT ☒ YES ☐ NO
WELL INTEGRITY SATISFACTORY ☒ YES ☐ NO
WELL YIELD ☐ LOW ☒ MEDIUM ☐ HIGH

CONTAINERS

PERSONNEL	DATE	TIME	NO.	TYPE	PRESERV	PARAMETER

FIELD ANALYSIS

	1	2	3	4			
VOLUME PURGED (GAL.)	1	2	3	4.5			
TIME (MILITARY)	10:10	10:20	10:30	10:40			
pH (S.U.)	6.75	6.71	6.78	6.73			
CONDUCTIVITY							
WATER TEMP (C)	18	18	18	18			
TURBIDITY (SUBJECTIVE)*	2	2	3	3			
ODOR (SUBJECTIVE)**	3	3	3	3			

* (1) clear (2) slight (3) moderate (4) high ** (1) none (2) faint (3) moderate (4) high

ENSCI CORPORATION

FIELD DATA SHEET FOR GROUNDWATER SAMPLING

DATE 6/11/92
FIELD PERSONNEL Lennon
FACILITY NAME TFI Lenoir
EPA ID NO.
WELL ID NO. MW-6

☒ UPGRADIENT ☐ DOWNGRADIENT

WEATHER CONDITIONS RAINY/CLEAR/WINDY/PARTLY CLOUDY/WARM/HOT
AIR TEMPERATURE 85 °F
TOTAL WELL DEPTH (TWD) 18.79 1/100 ft
DEPTH TO GROUNDWATER (DGW) 9.89 1/100 ft
LENGTH OF WATER COLUMN (LWC) = TWD − DGW = 8.9 ft
1 CASING VOLUME (OCV) = LWC X .163 = 1.45 gal
3 CASING VOLUMES = 4.35 GAL = STD EVACUATION VOLUME
METHOD OF WELL EVACUATION SUBMERSIBLE PUMP/GEL T BAILER/B-K PUMP
METHOD OF SAMPLE COLLECTION DEDICATED T BAILER/GEL T BAILER/B-K BAILER
TOTAL VOLUME OF WATER REMOVED 5 gal

CASING DIAMETER ☒ 2 INCHES ☐ 4 INCHES
CASING MATERIAL ☐ PVC ☐ TEFLON ☒ STEEL
MEASURING POINT ELEVATION (MSL) 1128 1/100 ft
WATER TABLE ELEVATION (MSL) 1118 1/100 ft
pH/SPECIAL CONDITION METER CAL (DATE/TIME)
pH BUFFER SOLUTION USED
STEEL GUARD PIPE AROUND CASING ☐ YES ☒ NO
LOCKING CAP ☐ YES ☒ NO
PROTECTIVE ABUTMENT ☒ YES ☐ NO
WELL INTEGRITY SATISFACTORY ☒ YES ☐ NO
WELL YIELD ☐ LOW ☒ MEDIUM ☐ HIGH

CONTAINERS

PERSONNEL	DATE	TIME	NO.	TYPE	PRESERV	PARAMETER

FIELD ANALYSIS

	1-2	2-3	3-4	4-5			
VOLUME PURGED (GAL)							
TIME (MILITARY)							
pH (S.U.)							
CONDUCTIVITY							
WATER TEMP (C)							
TURBIDITY (SUBJECTIVE)*	2	3	4	4			
ODOR (SUBJECTIVE)**	2	2	2	2			

* (1) clear (2) slight (3) moderate (4) high ** (1) none (2) faint (3) moderate (4) high

ENSCI CORPORATION

FIELD DATA SHEET FOR GROUNDWATER SAMPLING

DATE 6/11/92
FIELD PERSONNEL Lennon
FACILITY NAME TFI Lenoir
EPA ID NO.
WELL ID NO. MW-7

☐ UPGRADIENT ☒ DOWNGRADIENT

WEATHER CONDITIONS RAINY/CLEAR/WINDY/PARTLY CLOUDY/WARM/HOT
AIR TEMPERATURE 85 °F
TOTAL WELL DEPTH (TWD) 39.99 1/100 ft
DEPTH TO GROUNDWATER (DGW) 7.73 1/100 ft
LENGTH OF WATER COLUMN (LWC) = TWD − DGW = 32 ft
1 CASING VOLUME (OCV) = LWC X = 5.25 gal
3 CASING VOLUMES = 15.7 GAL = STD EVACUATION VOLUME
METHOD OF WELL EVACUATION SUBMERSIBLE PUMP/GEL T BAILER/B-K PUMP
METHOD OF SAMPLE COLLECTION DEDICATED T BAILER/GEL T BAILER/B-K BAILER
TOTAL VOLUME OF WATER REMOVED 15 gal

CASING DIAMETER ☒ 2 INCHES ☐ 4 INCHES
CASING MATERIAL ☐ PVC ☐ TEFLON ☒ STEEL
MEASURING POINT ELEVATION (MSL) 1125 1/100 ft
WATER TABLE ELEVATION (MSL) 1117 1/100 ft
pH/SPECIAL CONDITION METER CAL (DATE/TIME)
pH BUFFER SOLUTION USED
STEEL GUARD PIPE AROUND CASING ☒ YES ☐ NO
LOCKING CAP ☐ YES ☒ NO
PROTECTIVE ABUTMENT ☒ YES ☐ NO
WELL INTEGRITY SATISFACTORY ☒ YES ☐ NO
WELL YIELD ☐ LOW ☒ MEDIUM ☐ HIGH

CONTAINERS

PERSONNEL	DATE	TIME	NO.	TYPE	PRESERV	PARAMETER

FIELD ANALYSIS

	1	2	3	4			
VOLUME PURGED (GAL)	3.9	7.8	11.7	15			
TIME (MILITARY)	11:50	12:00	12:10	12:20			
pH (S.U.)	6.5	6.5	6.5	6.5			
CONDUCTIVITY							
WATER TEMP (C)							
TURBIDITY (SUBJECTIVE)*	2	2	2	2			
ODOR (SUBJECTIVE)**	3	3	3	3			

* (1) clear (2) slight (3) moderate (4) high ** (1) none (2) faint (3) moderate (4) high

ENSCI CORPORATION

FIELD DATA SHEET FOR GROUNDWATER SAMPLING

DATE 6/11/92
FIELD PERSONNEL lennon
FACILITY NAME TFI Lenoir
EPA ID NO.
WELL ID NO. MW-8

☐ UPGRADIENT ☒ DOWNGRADIENT

WEATHER CONDITIONS RAINY/CLEAR/WINDY/PARTLY CLOUDY/WARM/HOT
AIR TEMPERATURE 85 °F
TOTAL WELL DEPTH (TWD) 40 1/100 ft
DEPTH TO GROUNDWATER (DGW) 8.71 1/100 ft
LENGTH OF WATER COLUMN (LWC) = TWD − DGW = 31.3 ft
1 CASING VOLUME (OCV) = LWC X .163 = 5.1 gal
3 CASING VOLUMES = 15 GAL = STD EVACUATION VOLUME
METHOD OF WELL EVACUATION SUBMERSIBLE PUMP/GEL T BAILER/B-K PUMP
METHOD OF SAMPLE COLLECTION DEDICATED T BAILER/GEL T BAILER/B-K BAILER
TOTAL VOLUME OF WATER REMOVED 15 gal

CASING DIAMETER ☒ 2 INCHES ☐ 4 INCHES
CASING MATERIAL ☐ PVC ☐ TEFLON ☒ STEEL
MEASURING POINT ELEVATION (MSL) 1122 1/100 ft
WATER TABLE ELEVATION (MSL) 1114 1/100 ft
pH/SPECIAL CONDITION METER CAL (DATE/TIME)
pH BUFFER SOLUTION USED
STEEL GUARD PIPE AROUND CASING ☒ YES ☐ NO
LOCKING CAP ☐ YES ☒ NO
PROTECTIVE ABUTMENT ☒ YES ☐ NO
WELL INTEGRITY SATISFACTORY ☒ YES ☐ NO
WELL YIELD ☐ LOW ☒ MEDIUM ☐ HIGH

CONTAINERS

PERSONNEL	DATE	TIME	NO.	TYPE	PRESERV	PARAMETER

FIELD ANALYSIS

	1	2	3	4			
VOLUME PURGED (GAL)	3.8	7.6	11.4	15			
TIME (MILITARY)	10:40	10:50	11:00	11:10			
pH (S.U.)	6.70	6.73	6.71	7.75			
CONDUCTIVITY							
WATER TEMP (C)							
TURBIDITY (SUBJECTIVE)*	2	2	3	3			
ODOR (SUBJECTIVE)**	3	3	3	3			

* (1) clear (2) slight (3) moderate (4) high ** (1) none (2) faint (3) moderate (4) high

ENSCI CORPORATION

FIELD DATA SHEET FOR GROUNDWATER SAMPLING

DATE 6/11/92
FIELD PERSONNEL Lennon
FACILITY NAME TFI Lenoir
EPA ID NO.
WELL ID NO. MW-9

☒ UPGRADIENT ☐ DOWNGRADIENT

WEATHER CONDITIONS RAINY/CLEAR/WINDY/PARTLY CLOUDY/WARM/HOT
AIR TEMPERATURE 85 °F
TOTAL WELL DEPTH (TWD) 20 1/100 ft
DEPTH TO GROUNDWATER (DGW) 6.78 1/100 ft
LENGTH OF WATER COLUMN (LWC) = TWD − DGW = 13.2 ft
1 CASING VOLUME (OCV) = LWC X .163 = 2.15 gal
3 CASING VOLUMES = 7 GAL = STD EVACUATION VOLUME
METHOD OF WELL EVACUATION SUBMERSIBLE PUMP/GEL T BAILER/B-K PUMP
METHOD OF SAMPLE COLLECTION DEDICATED T BAILER/GEL T BAILER/B-K BAILER
TOTAL VOLUME OF WATER REMOVED 7 gal

CASING DIAMETER ☒ 2 INCHES ☐ 4 INCHES
CASING MATERIAL ☐ PVC ☐ TEFLON ☒ STEEL
MEASURING POINT ELEVATION (MSL) 1129 1/100 ft
WATER TABLE ELEVATION (MSL) 1122 1/100 ft
pH/SPECIAL CONDITION METER CAL (DATE/TIME)
pH BUFFER SOLUTION USED
STEEL GUARD PIPE AROUND CASING ☐ YES ☒ NO
LOCKING CAP ☐ YES ☒ NO
PROTECTIVE ABUTMENT ☒ YES ☐ NO
WELL INTEGRITY SATISFACTORY ☒ YES ☐ NO
WELL YIELD ☐ LOW ☒ MEDIUM ☐ HIGH

CONTAINERS

PERSONNEL	DATE	TIME	NO.	TYPE	PRESERV	PARAMETER

FIELD ANALYSIS

VOLUME PURGED (GAL)	1	2					
TIME (MILITARY)	0-3	4-7					
pH (S.U.)							
CONDUCTIVITY							
WATER TEMP (C)							
TURBIDITY (SUBJECTIVE)*							
ODOR (SUBJECTIVE)**	3	2					
	2	2					

* (1) clear (2) slight (3) moderate (4) high ** (1) none (2) faint (3) moderate (4) high

ENSCI CORPORATION

FIELD DATA SHEET FOR GROUNDWATER SAMPLING

DATE 6/11/92
FIELD PERSONNEL Lennon
FACILITY NAME TFI Lenoir
EPA ID NO.
WELL ID NO. MW-10

☒ UPGRADIENT ☐ DOWNGRADIENT

WEATHER CONDITIONS RAINY/CLEAR/WINDY/PARTLY CLOUDY/WARM/HOT
AIR TEMPERATURE 85 °F
TOTAL WELL DEPTH (TWD) 20.14 1/100 ft
DEPTH TO GROUNDWATER (DGW) 10.9 1/100 ft
LENGTH OF WATER COLUMN (LWC) = TWD − DGW = 9.24 ft
1 CASING VOLUME (OCV) = LWC X .163 = 1.5 gal
3 CASING VOLUMES = 5 GAL = STD EVACUATION VOLUME
METHOD OF WELL EVACUATION SUBMERSIBLE PUMP/GEL T BAILER/B-K PUMP
METHOD OF SAMPLE COLLECTION DEDICATED T BAILER/GEL T BAILER/B-K BAILER
TOTAL VOLUME OF WATER REMOVED 5 gal

CASING DIAMETER ☒ 2 INCHES ☐ 4 INCHES
CASING MATERIAL ☐ PVC ☐ TEFLON ☒ STEEL
MEASURING POINT ELEVATION (MSL) 1129 1/100 ft
WATER TABLE ELEVATION (MSL) 1118 1/100 ft
pH/SPECIAL CONDITION METER CAL (DATE/TIME)
pH BUFFER SOLUTION USED
STEEL GUARD PIPE AROUND CASING ☐ YES ☒ NO
LOCKING CAP ☐ YES ☒ NO
PROTECTIVE ABUTMENT ☒ YES ☐ NO
WELL INTEGRITY SATISFACTORY ☒ YES ☐ NO
WELL YIELD ☐ LOW ☒ MEDIUM ☐ HIGH

CONTAINERS

PERSONNEL	DATE	TIME	NO.	TYPE	PRESERV	PARAMETER

FIELD ANALYSIS

	1	2	3				
VOLUME PURGED (GAL.)	1-2.5	2.5-3.5	3.5-5				
TIME (MILITARY)							
pH (S.U.)							
CONDUCTIVITY							
WATER TEMP (C)							
TURBIDITY (SUBJECTIVE)*	3	3					
ODOR (SUBJECTIVE)**	1	1					

* (1) clear (2) slight (3) moderate (4) high ** (1) none (2) faint (3) moderate (4) high

ENSCI CORPORATION

FIELD DATA SHEET FOR GROUNDWATER SAMPLING

DATE 6/11/92
FIELD PERSONNEL Lennon
FACILITY NAME TFI Lenoir
EPA ID NO.
WELL ID NO. MW-11

☐ UPGRADIENT ☒ DOWNGRADIENT

WEATHER CONDITIONS RAINY/CLEAR/WINDY/PARTLY CLOUDY/WARM/HOT
AIR TEMPERATURE 85 °F
TOTAL WELL DEPTH (TWD) 15.2 1/100 ft
DEPTH TO GROUNDWATER (DGW) 9.0 1/100 ft
LENGTH OF WATER COLUMN (LWC) = TWD − DGW = 6.2 ft
1 CASING VOLUME (OCV) = LWC X .163 = 1.01 gal
3 CASING VOLUMES = 3.03 GAL = STD EVACUATION VOLUME
METHOD OF WELL EVACUATION SUBMERSIBLE PUMP/GEL T BAILER/B-K PUMP
METHOD OF SAMPLE COLLECTION DEDICATED T BAILER/GEL T BAILER/B-K BAILER
TOTAL VOLUME OF WATER REMOVED 4 gal

CASING DIAMETER ☒ 2 INCHES ☐ 4 INCHES
CASING MATERIAL ☐ PVC ☐ TEFLON ☒ STEEL
MEASURING POINT ELEVATION (MSL) 1128 1/100 ft
WATER TABLE ELEVATION (MSL) 1119 1/100 ft
pH/SPECIAL CONDITION METER CAL (DATE/TIME)
pH BUFFER SOLUTION USED
STEEL GUARD PIPE AROUND CASING ☐ YES ☒ NO
LOCKING CAP ☐ YES ☒ NO
PROTECTIVE ABUTMENT ☒ YES ☐ NO
WELL INTEGRITY SATISFACTORY ☒ YES ☐ NO
WELL YIELD ☐ LOW ☒ MEDIUM ☐ HIGH

CONTAINERS

PERSONNEL	DATE	TIME	NO.	TYPE	PRESERV	PARAMETER

FIELD ANALYSIS

VOLUME PURGED (GAL.)	1	2					
TIME (MILITARY)	1-2	2-4					
pH (S.U.)							
CONDUCTIVITY							
WATER TEMP (C)							
TURBIDITY (SUBJECTIVE)*							
ODOR (SUBJECTIVE)**	3	2					
	1	1					

* (1) clear (2) slight (3) moderate (4) high ** (1) none (2) faint (3) moderate (4) high

ENSCI CORPORATION

FIELD DATA SHEET FOR GROUNDWATER SAMPLING

DATE 6/11/92
FIELD PERSONNEL Lennon
FACILITY NAME ~~TFI Lenoir~~
EPA ID NO.
WELL ID NO. MW-12

☐ UPGRADIENT ☒ DOWNGRADIENT

WEATHER CONDITIONS RAINY/CLEAR/WINDY/PARTLY CLOUDY/WARM/HOT
AIR TEMPERATURE 85 °F
TOTAL WELL DEPTH (TWD) 15 1/100 ft
DEPTH TO GROUNDWATER (DGW) 8.73 1/100 ft
LENGTH OF WATER COLUMN (LWC) = TWD − DGW = 6.3 ft
1 CASING VOLUME (OCV) = LWC X .163 = 1.02 gal
3 CASING VOLUMES = 3.06 GAL = STD EVACUATION VOLUME
METHOD OF WELL EVACUATION SUBMERSIBLE PUMP/GEL T BAILER/B-K PUMP
METHOD OF SAMPLE COLLECTION DEDICATED T BAILER/GEL T BAILER/B-K BAILER
TOTAL VOLUME OF WATER REMOVED 4 gal

CASING DIAMETER ☒ 2 INCHES ☐ 4 INCHES
CASING MATERIAL ☐ PVC ☐ TEFLON ☒ STEEL
MEASURING POINT ELEVATION (MSL) 1129 1/100 ft
WATER TABLE ELEVATION (MSL) 1120 1/100 ft
pH/SPECIAL CONDITION METER CAL (DATE/TIME)
pH BUFFER SOLUTION USED
STEEL GUARD PIPE AROUND CASING ☐ YES ☒ NO
LOCKING CAP ☐ YES ☒ NO
PROTECTIVE ABUTMENT ☒ YES ☐ NO
WELL INTEGRITY SATISFACTORY ☒ YES ☐ NO
WELL YIELD ☐ LOW ☒ MEDIUM ☐ HIGH

CONTAINERS

PERSONNEL	DATE	TIME	NO.	TYPE	PRESERV	PARAMETER

FIELD ANALYSIS

	1-2	2-4					
VOLUME PURGED (GAL.)							
TIME (MILITARY)							
pH (S.U.)							
CONDUCTIVITY							
WATER TEMP (C)							
TURBIDITY (SUBJECTIVE)*	3	2					
ODOR (SUBJECTIVE)**	1	1					

* (1) clear (2) slight (3) moderate (4) high ** (1) none (2) faint (3) moderate (4) high

ENSCI CORPORATION

FIELD DATA SHEET FOR GROUNDWATER SAMPLING

DATE 6/11/92
FIELD PERSONNEL T. Scott
FACILITY NAME TFI Lenoir
EPA ID NO.
WELL ID NO. MW-13

☐ UPGRADIENT ☒ DOWNGRADIENT

WEATHER CONDITIONS RAINY/CLEAR/WINDY/PARTLY CLOUDY/WARM/HOT
AIR TEMPERATURE 85 °F
TOTAL WELL DEPTH (TWD) 40 1/100 ft
DEPTH TO GROUNDWATER (DGW) 8.94 1/100 ft
LENGTH OF WATER COLUMN (LWC) = TWD − DGW = 31.06 ft
1 CASING VOLUME (OCV) = LWC X .163 = 5.06 gal
3 CASING VOLUMES = 15.18 GAL = STD EVACUATION VOLUME
METHOD OF WELL EVACUATION SUBMERSIBLE PUMP/GEL T BAILER/B-K PUMP
METHOD OF SAMPLE COLLECTION DEDICATED T BAILER/GEL T BAILER/B-K BAILER
TOTAL VOLUME OF WATER REMOVED 16 gal

CASING DIAMETER ☒ 2 INCHES ☐ 4 INCHES
CASING MATERIAL ☐ PVC ☐ TEFLON ☒ STEEL
MEASURING POINT ELEVATION (MSL) 1129 1/100 ft
WATER TABLE ELEVATION (MSL) 1120 1/100 ft
pH/SPECIAL CONDITION METER CAL (DATE/TIME)
pH BUFFER SOLUTION USED
STEEL GUARD PIPE AROUND CASING ☒ YES ☐ NO
LOCKING CAP ☒ YES ☐ NO
PROTECTIVE ABUTMENT ☒ YES ☐ NO
WELL INTEGRITY SATISFACTORY ☒ YES ☐ NO
WELL YIELD ☐ LOW ☒ MEDIUM ☐ HIGH

CONTAINERS

PERSONNEL	DATE	TIME	NO.	TYPE	PRESERV	PARAMETER
T.S.	6/11	12:15				

FIELD ANALYSIS

	0-5	5-10	10-15				
VOLUME PURGED (GAL)	12:15	12:22	12:25				
TIME (MILITARY)							
pH (S.U.)							
CONDUCTIVITY							
WATER TEMP (C)							
TURBIDITY (SUBJECTIVE)*	4	4	4				
ODOR (SUBJECTIVE)**	0	0	0				

* (1) clear (2) slight (3) moderate (4) high ** (1) none (2) faint (3) moderate (4) high

Appendix C

Laboratory Reports and Chain of Custody Forms

AnalytiKEM *An American NuKEM Company*

AnalytiKEM Inc.
454 S. Anderson Road, BTC 532
Rock Hill, SC 29730
803/329-9690

TEST REPORT NO. A82351

July 8, 1992

Prepared for:

Ensci
1108 Thomasville Road
High Point, NC 27260

Attention: Bruce Braswell

Project: TFI - Lenoir

Reviewed &
Approved by: _____

Name: Carmine M. Fioriglio

Title: QA/QC Manager

AnalytiKEM

TABLE OF CONTENTS

		Page
I.	Certification	1
II.	Definition of Terms	2
III.	Sample Designations	3
IV.	Methodology	4
V.	Analytical Results	5 - 26
VI.	Quality Control Data	27 - 39

AnalytiKEM

I. Certification

AnalytiKEM, Inc.
Current Certifications/Regulatory Approvals

Tabulated below are the current laboratory certifications that are held by each AnalytiKEM Laboratory. Analyses performed at multiple AnalytiKEM locations will be noted in the test report.

Cherry Hill, NJ		Rock Hill, SC		Houston Analytical, Tx	
State	Cert #	State	Cert #	State	Cert #
Arkansas	*	S. Carolina	46067	N. Dakota	R-006
Connecticut	PH-0715	N. Carolina	316	Oklahoma	8403
Florida	880985G	New Jersey	79795	Texas Water Commission *	
Massachusetts	NJ117			Louisiana *	
New Jersey	04012				
New York	10815				
N. Carolina	258				
N. Dakota	R-038				
Pennsylvania	68366				
S. Carolina	94004				
Tennessee	02908				
Vermont	*				

* No certification numbers are issued for these states.

AnalytiKEM

II. Definition of Terms

Term	Definition
D	Detected; result must be greater than zero.
DI	Deionized Water
J	Compound was detected at levels below the practical quantitation limit. The level reported is approximate.
MS/MSD	Matrix Spike/Matrix Spike Duplicate.
NA	Analysis not applicable to the sample matrix.
ND	Not Detected
NR	Not Requested
NTU	Nephelometric Turbidity Units
RPD	Relative Percent Difference
RSD	Relative Standard Deviation
U	Compound was analyzed for but not detected. The preceding number is the practical quantitation limit for the compound.
ppb	Parts-per-billion; may be converted to ppm by dividing by 1,000.
ppm	Parts-per-million; may be converted to ppb by multiplying by 1,000.
ug/l	Micrograms of constituent per liter of sample; equivalent to parts-per-billion.
ug/kg	Micrograms of constituent per kilogram of sample; equivalent to parts-per-billion.
ug/kg dw	Micrograms of constituent per kilogram of sample reported on a dry weight basis.
CCC	Calibration Check Compound; used to verify the precision of a GC/MS calibration curve.
SPCC	System Performance Check Compound; used to verify the correct operation of a GC/MS instrument.
PQL	Practical Quantitation Limit; the minimum level at which compounds can be dependably quantitated.
B	Analyte detected in associated blank as well as the sample. It indicates possible/probable blank contamination.

AnalytiKEM

III. Sample Designations

AnalytiKEM Designation	Client Designation	Matrix	Date Sampled
A82351-1	MW 1	Aqueous	6/11/92
A82351-2	MW 2	Aqueous	6/11/92
A82351-3	MW 3	Aqueous	6/11/92
A82351-4	MW 4	Aqueous	6/11/92
A82351-5	MW 5	Aqueous	6/11/92
A82351-6	MW 6	Aqueous	6/11/92
A82351-7	MW 7	Aqueous	6/11/92
A82351-8	MW 8	Aqueous	6/11/92
A82351-9	MW 9	Aqueous	6/11/92
A82351-10	MW 10	Aqueous	6/11/92
A82351-11	MW 11	Aqueous	6/11/92
A82351-12	MW 12	Aqueous	6/11/92
A82351-13	MW 13	Aqueous	6/11/92
A82351-14	W	Aqueous	6/11/92
A82351-15	DC	Aqueous	6/11/92

Note: Samples will be held for 30 days beyond the test report date unless otherwise requested.

IV. Methodology

AnalytiKEM

Volatiles

Method 5030, Purge and Trap, Test Methods for Evaluating Solid Waste, Physical/Chemical Methods, SW846, Second Edition, USEPA.

Method 8240, Gas Chromatography/Mass Spectrometry for Volatile Organics, Test Methods for Evaluating Solid Waste, Physical/Chemical Methods, SW846, Second Edition, USEPA.

Method 5030, Purge and Trap, Test Methods for Evaluating Solid Waste, Physical/Chemical Methods, SW846, Third Edition, USEPA 1986 with all promulgated revisions.

Method 8240, Gas Chromatography/Mass Spectrometry for Volatile Organics, Test Methods for Evaluating Solid Waste, Physical/Chemical Methods, SW846. Third Edition, USEPA 1986 with all promulgated revisions.

Semivolatiles

Method 3510, Separatory Funnel Liquid-Liquid Extraction, Test Methods for Evaluating Solid Waste, Physical Chemical Methods, SW846, Second Edition, USEPA.

Method 3550, Sonication Extraction, Test Methods for Evaluating Solid Waste, Physical/Chemical Methods, SW846, Second Edition, USEPA.

Method 8270, Gas Chromatography/Mass Spectrometry for Semivolatile Organics: Capillary Column Technique, Test Methods for Evaluating Solid Waste, Physical/Chemical Methods, SW846, Second Edition, USEPA.

Method 3510, Separatory Funnel Liquid-Liquid Extraction, Test Methods for Evaluating Solid Waste, Physical Chemical Methods, SW846, Third Edition, USEPA 1986 with all promulgated revisions.

Method 8270, Gas Chromatography/Mass Spectrometry for Semivolatile Organics: Capillary Column Technique, Test Methods for Evaluating Solid Waste, Physical/Chemical Methods, SW846, Third Edition, USEPA 1986 with all promulgated revisions.

General Gas Chromatography

Polar Organics (alcohols, ketones, glycols)

AnalytiKEM Method FIDG-INH-OH-0789, Determination of Volatile Polar Organics by Direct Aqueous Injection, 1989 (unpublished).

V. Analytical Results

AnalytiKEM

Volatile Organics

Parameter	Method Blank 1	A82351-1 MW 1	A82351-2 MW 2	A82351-3 MW 3
		Sample Designation		
Chloromethane	10 U	10 U	10 U	10 U
Bromomethane	10 U	10 U	10 U	10 U
Vinyl Chloride	10 U	10 U	10 U	10 U
Chloroethane	10 U	10 U	10 U	10 U
Methylene Chloride	4.7 J	1.7 J	1.8 J	1.9 J
2-Propanone (Acetone)	6.7 J	73 J	120	14 J
Carbon Disulfide	5.0 U	5.0 U	9.4	2.2 J
1,1-Dichloroethene	5.0 U	5.0 U	5.0 U	5.0 U
1,1-Dichloroethane	5.0 U	5.0 U	5.0 U	5.0 U
trans-1,2-Dichloroethene	5.0 U	5.0 U	5.0 U	5.0 U
Chloroform	5.0 U	5.0 U	5.0 U	5.0 U
1,2-Dichloroethane	5.0 U	5.0 U	5.0 U	5.0 U
2-Butanone (MEK)	100 U	100 U	100 U	100 U
1,1,1-Trichloroethane	5.0 U	5.0 U	5.0 U	5.0 U
Carbon Tetrachloride	5.0 U	5.0 U	5.0 U	5.0 U
Vinyl Acetate	50 U	50 U	50 U	50 U
Bromodichloromethane	5.0 U	5.0 U	5.0 U	5.0 U
1,2-Dichloropropane	5.0 U	5.0 U	5.0 U	5.0 U
trans-1,3-Dichloropropene	5.0 U	5.0 U	5.0 U	5.0 U
Trichloroethene	1.0 J	5.0 U	5.0 U	5.0 U
Dibromochloromethane	5.0 U	5.0 U	5.0 U	5.0 U
1,1,2-Trichloroethane	5.0 U	5.0 U	5.0 U	5.0 U
Benzene	5.0 U	5.0 U	5.0 U	5.0 U
cis-1,3-Dichloropropene	5.0 U	5.0 U	5.0 U	5.0 U
2-Chloroethylvinylether	10 U	10 U	10 U	10 U
Bromoform	5.0 U	5.0 U	5.0 U	5.0 U
4-Methyl-2-pentanone (MIBK)	50 U	50 U	50 U	50 U
2-Hexanone	50 U	50 U	50 U	50 U
Tetrachloroethene	1.4 J	5.0 U	5.0 U	5.0 U
1,1,2,2-Tetrachloroethane	5.0 U	5.0 U	5.0 U	5.0 U
Toluene	5.0 U	5.0 U	5.0 U	5.0 U
Chlorobenzene	5.0 U	5.0 U	5.0 U	5.0 U
Ethylbenzene	5.0 U	5.0 U	5.0 U	5.0 U
Styrene	5.0 U	5.0 U	5.0 U	5.0 U
m-Xylene	5.0 U	5.0 U	5.0 U	100
o,p-Xylene	5.0 U	5.0 U	5.0 U	5.0 U
Units	(ug/l)	(ug/l)	(ug/l)	(ug/l)

V. Analytical Results (Cont'd)

AnalytiKEM

Volatile Organics

Parameter	Method Blank 1	A82351-7 MW 7	A82351-12 MW 12	A82351-13 MW 13
		Sample Designation		
Chloromethane	10 U	10 U	10 U	10 U
Bromomethane	10 U	10 U	10 U	10 U
Vinyl Chloride	10 U	10 U	10 U	10 U
Chloroethane	10 U	10 U	10 U	10 U
Methylene Chloride	4.7 J	1.9 J	1.7 J	1.8 J
2-Propanone (Acetone)	6.7 J	660	200	39 J
Carbon Disulfide	5.0 U	6.6	5.0 U	5.0 U
1,1-Dichloroethene	5.0 U	5.0 U	5.0 U	5.0 U
1,1-Dichloroethane	5.0 U	5.0 U	5.0 U	5.0 U
trans-1,2-Dichloroethene	5.0 U	5.0 U	5.0 U	5.0 U
Chloroform	5.0 U	5.0 U	5.0 U	7.7
1,2-Dichloroethane	5.0 U	5.0 U	5.0 U	5.0 U
2-Butanone (MEK)	100 U	100 U	100 U	100 U
1,1,1-Trichloroethane	5.0 U	5.0 U	5.0 U	5.0 U
Carbon Tetrachloride	5.0 U	5.0 U	5.0 U	5.0 U
Vinyl Acetate	50 U	50 U	50 U	50 U
Bromodichloromethane	5.0 U	5.0 U	5.0 U	5.0 U
1,2-Dichloropropane	5.0 U	5.0 U	5.0 U	5.0 U
trans-1,3-Dichloropropene	5.0 U	5.0 U	5.0 U	5.0 U
Trichloroethene	1.0 J	5.0 U	5.0 U	5.0 U
Dibromochloromethane	5.0 U	5.0 U	5.0 U	5.0 U
1,1,2-Trichloroethane	5.0 U	5.0 U	5.0 U	5.0 U
Benzene	5.0 U	5.0 U	5.0 U	5.0 U
cis-1,3-Dichloropropene	5.0 U	5.0 U	5.0 U	5.0 U
2-Chloroethylvinylether	10 U	10 U	10 U	10 U
Bromoform	5.0 U	5.0 U	5.0 U	5.0 U
4-Methyl-2-pentanone (MIBK)	50 U	50 U	50 U	50 U
2-Hexanone	50 U	50 U	50 U	50 U
Tetrachloroethene	1.4 J	5.0 U	5.0 U	5.0 U
1,1,2,2-Tetrachloroethane	5.0 U	5.0 U	5.0 U	5.0 U
Toluene	5.0 U	5.0 U	5.0 U	5.0 U
Chlorobenzene	5.0 U	5.0 U	5.0 U	5.0 U
Ethylbenzene	5.0 U	5.0 U	5.0 U	5.0 U
Styrene	5.0 U	5.0 U	5.0 U	5.0 U
m-Xylene	5.0 U	5.0 U	5.0 U	5.0 U
o,p-Xylene	5.0 U	5.0 U	5.0 U	5.0 U
Units	(ug/l)	(ug/l)	(ug/l)	(ug/l)

V. Analytical Results (Cont'd)

AnalytiKEM

Volatile Organics

Parameter	Method Blank 2	A82351-8 MW 8	A82351-9 MW 9	A82351-10 MW 10
		Sample Designation		
Chloromethane	10 U	10 U	10 U	10 U
Bromomethane	10 U	10 U	10 U	10 U
Vinyl Chloride	10 U	10 U	10 U	10 U
Chloroethane	10 U	10 U	10 U	10 U
Methylene Chloride	5.0 U	5.0 U	5.0 U	5.0 U
2-Propanone (Acetone)	100 U	100 U	100 U	28 J
Carbon Disulfide	5.0 U	5.0 U	5.0 U	5.0 U
1,1-Dichloroethene	5.0 U	5.0 U	5.0 U	5.0 U
1,1-Dichloroethane	5.0 U	5.0 U	5.0 U	5.0 U
trans-1,2-Dichloroethene	5.0 U	5.0 U	5.0 U	5.0 U
Chloroform	5.0 U	1.3 J	5.0 U	5.0 U
1,2-Dichloroethane	5.0 U	5.0 U	5.0 U	5.0 U
2-Butanone (MEK)	100 U	100 U	100 U	100 U
1,1,1-Trichloroethane	5.0 U	5.0 U	5.0 U	5.0 U
Carbon Tetrachloride	5.0 U	5.0 U	5.0 U	5.0 U
Vinyl Acetate	50 U	50 U	50 U	50 U
Bromodichloromethane	5.0 U	5.0 U	5.0 U	5.0 U
1,2-Dichloropropane	5.0 U	5.0 U	5.0 U	5.0 U
trans-1,3-Dichloropropene	5.0 U	5.0 U	5.0 U	5.0 U
Trichloroethene	5.0 U	5.0 U	5.0 U	5.0 U
Dibromochloromethane	5.0 U	5.0 U	5.0 U	5.0 U
1,1,2-Trichloroethane	5.0 U	5.0 U	5.0 U	5.0 U
Benzene	5.0 U	5.0 U	5.0 U	5.0 U
cis-1,3-Dichloropropene	5.0 U	5.0 U	5.0 U	5.0 U
2-Chloroethylvinylether	10 U	10 U	10 U	10 U
Bromoform	5.0 U	5.0 U	5.0 U	5.0 U
4-Methyl-2-pentanone (MIBK)	50 U	50 U	50 U	50 U
2-Hexanone	50 U	50 U	50 U	50 U
Tetrachloroethene	5.0 U	5.0 U	5.0 U	5.0 U
1,1,2,2-Tetrachloroethane	5.0 U	5.0 U	5.0 U	5.0 U
Toluene	5.0 U	5.0 U	5.0 U	5.0 U
Chlorobenzene	5.0 U	5.0 U	5.0 U	5.0 U
Ethylbenzene	5.0 U	5.0 U	5.0 U	5.0 U
Styrene	5.0 U	5.0 U	5.0 U	5.0 U
m,p-Xylene	5.0 U	5.0 U	5.0 U	5.0 U
o-Xylene	5.0 U	5.0 U	5.0 U	5.0 U
Units	(ug/l)	(ug/l)	(ug/l)	(ug/l)

V. Analytical Results (Cont'd)

AnalytiKEM

Volatile Organics

Parameter	Method Blank 2	A82351-11 MW 11	Method Blank 3	A82351-14 W
	Sample Designation			
Chloromethane	10 U	10 U	10 U	10 U
Bromomethane	10 U	10 U	10 U	10 U
Vinyl Chloride	10 U	10 U	10 U	10 U
Chloroethane	10 U	10 U	10 U	10 U
Methylene Chloride	5.0 U	5.0 U	5.0 U	5.0 U
2-Propanone (Acetone)	100 U	100 U	100 U	2,200 *
Carbon Disulfide	5.0 U	5.0 U	5.0 U	16
1,1-Dichloroethene	5.0 U	5.0 U	5.0 U	5.0 U
1,1-Dichloroethane	5.0 U	5.0 U	5.0 U	5.0 U
trans-1,2-Dichloroethene	5.0 U	5.0 U	5.0 U	5.0 U
Chloroform	5.0 U	6.6	5.0 U	5.0 U
1,2-Dichloroethane	5.0 U	5.0 U	5.0 U	5.0 U
2-Butanone (MEK)	100 U	100 U	100 U	100 U
1,1,1-Trichloroethane	5.0 U	5.0 U	5.0 U	5.0 U
Carbon Tetrachloride	5.0 U	5.0 U	5.0 U	5.0 U
Vinyl Acetate	50 U	50 U	50 U	50 U
Bromodichloromethane	5.0 U	5.0 U	5.0 U	5.0 U
1,2-Dichloropropane	5.0 U	5.0 U	5.0 U	5.0 U
trans-1,3-Dichloropropene	5.0 U	5.0 U	5.0 U	5.0 U
Trichloroethene	5.0 U	5.0 U	5.0 U	5.0 U
Dibromochloromethane	5.0 U	5.0 U	5.0 U	5.0 U
1,1,2-Trichloroethane	5.0 U	5.0 U	5.0 U	5.0 U
Benzene	5.0 U	5.0 U	5.0 U	5.0 U
cis-1,3-Dichloropropene	5.0 U	5.0 U	5.0 U	5.0 U
2-Chloroethylvinylether	10 U	10 U	10 U	10 U
Bromoform	5.0 U	5.0 U	5.0 U	5.0 U
4-Methyl-2-pentanone (MIBK)	50 U	50 U	50 U	50 U
2-Hexanone	50 U	50 U	50 U	50 U
Tetrachloroethene	5.0 U	5.0 U	5.0 U	5.0 U
1,1,2,2-Tetrachloroethane	5.0 U	5.0 U	5.0 U	5.0 U
Toluene	5.0 U	5.0 U	5.0 U	5.0 U
Chlorobenzene	5.0 U	5.0 U	5.0 U	5.0 U
Ethylbenzene	5.0 U	5.0 U	5.0 U	5.0 U
Styrene	5.0 U	5.0 U	5.0 U	5.0 U
m,p-Xylene	5.0 U	5.0 U	5.0 U	1.2 J
o-Xylene	5.0 U	5.0 U	5.0 U	5.0 U
Units	(ug/l)	(ug/l)	(ug/l)	(ug/l)

* Result obtained from rerun due to saturation in original run.

V. Analytical Results (Cont'd)

AnalytiKEM

Volatile Organics

Parameter	Method Blank 4		A82351-4 MW 4		A82351-5 MW 5		A82351-6 MW 6	
	Sample Designation							
Chloromethane	10	U	10	U	10	U	10	U
Bromomethane	10	U	10	U	10	U	10	U
Vinyl Chloride	10	U	10	U	10	U	10	U
Chloroethane	10	U	10	U	10	U	10	U
Methylene Chloride	3.2	J	5.0	U	5.0	U	5.0	U
2-Propanone (Acetone)	100	U	96	J	17	J	100	U
Carbon Disulfide	5.0	U	0.85	J	2.0	J	8.9	
1,1-Dichloroethene	5.0	U	5.0	U	5.0	U	5.0	U
1,1-Dichloroethane	5.0	U	5.0	U	5.0	U	5.0	U
trans-1,2-Dichloroethene	5.0	U	5.0	U	5.0	U	5.0	U
Chloroform	5.0	U	5.0	U	5.0	U	5.0	U
1,2-Dichloroethane	5.0	U	5.0	U	5.0	U	5.0	U
2-Butanone (MEK)	100	U	20	J	100	U	100	U
1,1,1-Trichloroethane	5.0	U	5.0	U	5.0	U	5.0	U
Carbon Tetrachloride	5.0	U	5.0	U	5.0	U	5.0	U
Vinyl Acetate	50	U	50	U	50	U	50	U
Bromodichloromethane	5.0	U	5.0	U	5.0	U	5.0	U
1,2-Dichloropropane	5.0	U	5.0	U	5.0	U	5.0	U
trans-1,3-Dichloropropene	5.0	U	5.0	U	5.0	U	5.0	U
Trichloroethene	5.0	U	5.0	U	5.0	U	5.0	U
Dibromochloromethane	5.0	U	5.0	U	5.0	U	5.0	U
1,1,2-Trichloroethane	5.0	U	5.0	U	5.0	U	5.0	U
Benzene	5.0	U	8.3		1.3	J	5.0	U
cis-1,3-Dichloropropene	5.0	U	5.0	U	5.0	U	5.0	U
Bromoform	5.0	U	5.0	U	5.0	U	5.0	U
4-Methyl-2-pentanone (MIBK)	50	U	50	U	50	U	50	U
2-Hexanone	50	U	50	U	50	U	50	U
Tetrachloroethene	5.0	U	5.0	U	5.0	U	5.0	U
1,1,2,2-Tetrachloroethane	5.0	U	5.0	U	5.0	U	5.0	U
Toluene	5.0	U	5.0	U	5.0	U	5.0	U
Chlorobenzene	5.0	U	5.0	U	5.0	U	5.0	U
Ethylbenzene	5.0	U	5.0	U	5.0	U	5.0	U
Styrene	5.0	U	5.0	U	5.0	U	5.0	U
m-Xylene	5.0	U	900	*	140		5.0	U
o,p-Xylene	5.0	U	31		1.5	J	5.0	U
Units	(ug/l)		(ug/l)		(ug/l)		(ug/l)	

* Result obtained from rerun due to saturation in original run.

Note: These samples were analyzed at our Cherry Hill, NJ facility.

V. Analytical Results (Cont'd)

AnalytiKEM

Volatile Organics (Appendix IX Auxilliary Compounds)

Parameter	Method Blank 4	A82351-4 MW 4	A82351-5 MW 5	A82351-6 MW 6
	Sample Designation			
Allyl Chloride	5.0 U	5.0 U	5.0 U	5.0 U
Chloroprene	5.0 U	5.0 U	5.0 U	5.0 U
1,2-Dibromo-3-chloropropane	5.0 U	5.0 U	5.0 U	5.0 U
1,2-Dibromomethane	5.0 U	5.0 U	5.0 U	5.0 U
trans-1,4-Dichloro-2-butene	5.0 U	5.0 U	5.0 U	5.0 U
Dichlorodifluoromethane	5.0 U	5.0 U	5.0 U	5.0 U
1,4-Dioxane	200 U	200 U	200 U	200 U
Methacrylonitrile	5.0 U	5.0 U	5.0 U	5.0 U
Dibromomethane	5.0 U	5.0 U	5.0 U	5.0 U
Iodomethane	5.0 U	5.0 U	5.0 U	5.0 U
Pentachloroethane	5.0 U	5.0 U	5.0 U	5.0 U
Propionitrile	5.0 U	5.0 U	5.0 U	5.0 U
1,1,1,2-Tetrachloroethane	5.0 U	5.0 U	5.0 U	5.0 U
Trichlorofluoromethane	5.0 U	5.0 U	5.0 U	5.0 U
1,2,3-Trichloropropane	5.0 U	5.0 U	5.0 U	5.0 U
Units	(ug/l)	(ug/l)	(ug/l)	(ug/l)

Note: These samples were analyzed at our Cherry Hill, NJ facility.

V. Analytical Results (Cont'd)

AnalytiKEM

Volatile Organics

Parameter	Method Blank 5	Sample Designation A82351-15 DC
Chloromethane	1,000 U	1,000 U
Bromomethane	1,000 U	1,000 U
Vinyl Chloride	1,000 U	1,000 U
Chloroethane	1,000 U	1,000 U
Methylene Chloride	480 J	420 J
2-Propanone (Acetone)	10,000 U	10,000 U
Carbon Disulfide	500 U	500 U
1,1-Dichloroethene	500 U	500 U
1,1-Dichloroethane	500 U	500 U
trans-1,2-Dichloroethene	500 U	500 U
Chloroform	500 U	500 U
1,2-Dichloroethane	500 U	500 U
2-Butanone (MEK)	10,000 U	10,000 U
1,1,1-Trichloroethane	500 U	500 U
Carbon Tetrachloride	500 U	500 U
Vinyl Acetate	5,000 U	5,000 U
Bromodichloromethane	500 U	500 U
1,2-Dichloropropane	500 U	500 U
trans-1,3-Dichloropropene	500 U	500 U
Trichloroethene	500 U	500 U
Dibromochloromethane	500 U	500 U
1,1,2-Trichloroethane	500 U	500 U
Benzene	500 U	500 U
cis-1,3-Dichloropropene	500 U	500 U
2-Chloroethylvinylether	1,000 U	1,000 U
Bromoform		
4-Methyl-2-pentanone (MIBK)	500 U	500 U
2-Hexanone	5,000 U	5,000 U
Tetrachloroethene	5,000 U	5,000 U
1,1,2,2-Tetrachloroethane	500 U	500 U
Toluene	500 U	500 U
	500 U	500 U
Chlorobenzene		
Ethylbenzene	500 U	500 U
Styrene	500 U	500 U
m-Xylene	500 U	500 U
o,p-Xylene	500 U	500 U
Units	(ug/kg)	(ug/kg)

V. Analytical Results (Cont'd)

AnalytiKEM

Semivolatile Organics (Page 1 of 2)

Parameter	Method Blank	A82351-1 MW 1	A82351-2 MW 2	A82351-3 MW 3
		Sample Designation		
N-Nitrosodimethylamine	5.0 U	10 U	10 U	10 U
Phenol	5.0 U	10 U	10 U	10 U
Bis(2-chloroethyl) Ether	5.0 U	10 U	10 U	10 U
2-Chlorophenol	5.0 U	10 U	10 U	10 U
1,3-Dichlorobenzene	5.0 U	10 U	10 U	10 U
1,4-Dichlorobenzene	5.0 U	10 U	10 U	10 U
Benzyl Alcohol	5.0 U	10 U	10 U	10 U
1,2-Dichlorobenzene	5.0 U	10 U	10 U	10 U
2-Methylphenol	5.0 U	10 U	10 U	10 U
Bis(2-chloroisopropyl) Ether	5.0 U	10 U	10 U	10 U
4-Methylphenol	5.0 U	10 U	10 U	10 U
N-Nitrosodipropylamine	5.0 U	10 U	10 U	10 U
Hexachloroethane	5.0 U	10 U	10 U	10 U
Nitrobenzene	5.0 U	10 U	10 U	10 U
Isophorone	5.0 U	10 U	10 U	10 U
2-Nitrophenol	5.0 U	10 U	10 U	10 U
2,4-Dimethylphenol	5.0 U	10 U	10 U	10 U
Benzoic Acid	25 U	50 U	50 U	50 U
Bis(2-chloroethoxy)methane	5.0 U	10 U	10 U	10 U
2,4-Dichlorophenol	5.0 U	10 U	10 U	10 U
1,2,4-Trichlorobenzene	5.0 U	10 U	10 U	10 U
Naphthalene	5.0 U	10 U	14	1.0 J
4-Chloroaniline	5.0 U	10 U	10 U	10 U
Hexachlorobutadiene	5.0 U	10 U	10 U	10 U
4-Chloro-3-methylphenol	5.0 U	10 U	10 U	10 U
2-Methylnaphthalene	5.0 U	10 U	13	10 U
Hexachlorocyclopentadiene	5.0 U	10 U	10 U	10 U
2,4,6-Trichlorophenol	25 U	50 U	50 U	50 U
2,4,5-Trichlorophenol	5.0 U	10 U	10 U	10 U
2-Chloronaphthalene	5.0 U	10 U	10 U	10 U
2-Nitroaniline	25 U	50 U	50 U	50 U
Dimethyl Phthalate	5.0 U	10 U	10 U	10 U
Acenaphthylene	5.0 U	10 U	10 U	10 U
3-Nitroaniline	25 U	50 U	50 U	50 U
Acenaphthene	5.0 U	10 U	10 U	10 U
2,4-Dinitrophenol	25 U	50 U	50 U	50 U
Units	(ug/l)	(ug/l)	(ug/l)	(ug/l)

V. Analytical Results (Cont'd)

AnalytiKEM

Semivolatile Organics (Page 2 of 2)

Parameter	Method Blank	A82351-1 MW 1	A82351-2 MW 2	A82351-3 MW 3
		Sample Designation		
4-Nitrophenol	25 U	50 U	50 U	50 U
Dibenzofuran	5.0 U	10 U	10 U	10 U
2,4-Dinitrotoluene	5.0 U	10 U	10 U	10 U
2,6-Dinitrotoluene	5.0 U	10 U	10 U	10 U
Diethyl Phthalate	5.0 U	10 U	10 U	10 U
4-Chlorophenyl Phenyl Ether	5.0 U	10 U	10 U	10 U
Fluorene	5.0 U	10 U	10 U	10 U
4-Nitroaniline	25 U	50 U	50 U	50 U
4,6-Dinitro-2-methylphenol	25 U	50 U	50 U	50 U
N-Nitrosodiphenylamine	5.0 U	10 U	10 U	10 U
4-Bromophenyl Phenyl Ether	5.0 U	10 U	10 U	10 U
Hexachlorobenzene	5.0 U	10 U	10 U	10 U
Pentachlorophenol	5.0 U	10 U	10 U	10 U
Phenanthrene	5.0 U	10 U	10 U	10 U
Anthracene	5.0 U	10 U	10 U	10 U
Dibutyl Phthalate	5.0 U	25	2.2 J	1.0 J
Fluoranthene	5.0 U	10 U	10 U	10 U
Benzidine	25 U	50 U	50 U	50 U
Pyrene	5.0 U	10 U	10 U	10 U
Butylbenzyl Phthalate	5.0 U	10 U	10 U	10 U
3,3'-Dichlorobenzidine	10 U	20 U	20 U	20 U
Benzo(a)anthracene	5.0 U	10 U	10 U	10 U
Bis(2-ethylhexyl) Phthalate	5.0 U	37	140	32
Chrysene	5.0 U	10 U	10 U	10 U
Dioctyl Phthalate	5.0 U	10 U	10 U	10 U
Benzo(b)fluoranthene	5.0 U	10 U	10 U	10 U
Benzo(k)fluoranthene	5.0 U	10 U	10 U	10 U
Benzo(a)pyrene	5.0 U	10 U	10 U	10 U
Indeno(1,2,3-cd)pyrene	5.0 U	10 U	10 U	10 U
Dibenzo(a,h)anthracene	5.0 U	10 U	10 U	10 U
Benzo(g,h,i)perylene	5.0 U	10 U	10 U	10 U
Units	(ug/l)	(ug/l)	(ug/l)	(ug/l)

V. Analytical Results (Cont'd)

AnalytiKEM

Semivolatile Organics (Page 1 of 2)

Parameter	Method Blank	A82351-7 MW 7	A82351-8 MW 8	A82351-9 MW 9
		Sample Designation		
N-Nitrosodimethylamine	5.0 U	10 U	10 U	10 U
Phenol	5.0 U	10 U	10 U	10 U
Bis(2-chloroethyl) Ether	5.0 U	10 U	10 U	10 U
2-Chlorophenol	5.0 U	10 U	10 U	10 U
1,3-Dichlorobenzene	5.0 U	10 U	10 U	10 U
1,4-Dichlorobenzene	5.0 U	10 U	10 U	10 U
Benzyl Alcohol	5.0 U	10 U	10 U	10 U
1,2-Dichlorobenzene	5.0 U	10 U	10 U	10 U
2-Methylphenol	5.0 U	10 U	10 U	10 U
Bis(2-chloroisopropyl) Ether	5.0 U	10 U	10 U	10 U
4-Methylphenol	5.0 U	10 U	10 U	10 U
N-Nitrosodipropylamine	5.0 U	10 U	10 U	10 U
Hexachloroethane	5.0 U	10 U	10 U	10 U
Nitrobenzene	5.0 U	10 U	10 U	10 U
Isophorone	5.0 U	10 U	10 U	10 U
2-Nitrophenol	5.0 U	10 U	10 U	10 U
2,4-Dimethylphenol	5.0 U	10 U	10 U	10 U
Benzoic Acid	25 U	50 U	50 U	50 U
Bis(2-chloroethoxy)methane	5.0 U	10 U	10 U	10 U
2,4-Dichlorophenol	5.0 U	10 U	10 U	10 U
1,2,4-Trichlorobenzene	5.0 U	10 U	10 U	10 U
Naphthalene	5.0 U	10 U	10 U	10 U
4-Chloroaniline	5.0 U	10 U	10 U	10 U
Hexachlorobutadiene	5.0 U	10 U	10 U	10 U
4-Chloro-3-methylphenol	5.0 U	10 U	10 U	10 U
2-Methylnaphthalene	5.0 U	10 U	10 U	10 U
Hexachlorocyclopentadiene	5.0 U	10 U	10 U	10 U
2,4,6-Trichlorophenol	25 U	50 U	50 U	50 U
2,4,5-Trichlorophenol	5.0 U	10 U	10 U	10 U
2-Chloronaphthalene	5.0 U	10 U	10 U	10 U
2-Nitroaniline	25 U	50 U	50 U	50 U
Dimethyl Phthalate	5.0 U	10 U	10 U	10 U
Acenaphthylene	5.0 U	10 U	10 U	10 U
3-Nitroaniline	25 U	50 U	50 U	50 U
Acenaphthene	5.0 U	10 U	10 U	10 U
2,4-Dinitrophenol	25 U	50 U	50 U	50 U
Units	(ug/l)	(ug/l)	(ug/l)	(ug/l)

V. Analytical Results (Cont'd)

AnalytiKEM

Semivolatile Organics (Page 2 of 2)

Parameter	Method Blank	A82351-7 MW 7	A82351-8 MW 8	A82351-9 MW 9
		Sample Designation		
4-Nitrophenol	25 U	50 U	50 U	50 U
Dibenzofuran	5.0 U	10 U	10 U	10 U
2,4-Dinitrotoluene	5.0 U	10 U	10 U	10 U
2,6-Dinitrotoluene	5.0 U	10 U	10 U	10 U
Diethyl Phthalate	5.0 U	10 U	10 U	10 U
4-Chlorophenyl Phenyl Ether	5.0 U	10 U	10 U	10 U
Fluorene	5.0 U	10 U	10 U	10 U
4-Nitroaniline	25 U	50 U	50 U	50 U
4,6-Dinitro-2-methylphenol	25 U	50 U	50 U	50 U
N-Nitrosodiphenylamine	5.0 U	10 U	10 U	10 U
4-Bromophenyl Phenyl Ether	5.0 U	10 U	10 U	10 U
Hexachlorobenzene	5.0 U	10 U	10 U	10 U
Pentachlorophenol	5.0 U	10 U	10 U	10 U
Phenanthrene	5.0 U	10 U	10 U	10 U
Anthracene	5.0 U	10 U	10 U	10 U
Dibutyl Phthalate	5.0 U	3.8 J	1.7 J	10 U
Fluoranthene	5.0 U	10 U	10 U	10 U
Benzidine	25 U	50 U	50 U	50 U
Pyrene	5.0 U	10 U	10 U	10 U
Butylbenzyl Phthalate	5.0 U	10 U	10 U	10 U
3,3'-Dichlorobenzidine	10 U	20 U	20 U	20 U
Benzo(a)anthracene	5.0 U	10 U	10 U	10 U
Bis(2-ethylhexyl) Phthalate	5.0 U	100	49	10 U
Chrysene	5.0 U	10 U	10 U	10 U
Dioctyl Phthalate	5.0 U	10 U	10 U	10 U
Benzo(b)fluoranthene	5.0 U	10 U	10 U	10 U
Benzo(k)fluoranthene	5.0 U	10 U	10 U	10 U
Benzo(a)pyrene	5.0 U	10 U	10 U	10 U
Indeno(1,2,3-cd)pyrene	5.0 U	10 U	10 U	10 U
Dibenzo(a,h)anthracene	5.0 U	10 U	10 U	10 U
Benzo(g,h,i)perylene	5.0 U	10 U	10 U	10 U
Units	(ug/l)	(ug/l)	(ug/l)	(ug/l)

V. Analytical Results (Cont'd)

AnalytiKEM

Semivolatile Organics (Page 1 of 2)

Parameter	Method Blank	A82351-10 MW 10	A82351-11 MW 11	A82351-12 MW 12
		Sample Designation		
N-Nitrosodimethylamine	5.0 U	10 U	10 U	10 U
Phenol	5.0 U	10 U	10 U	10 U
Bis(2-chloroethyl) Ether	5.0 U	10 U	10 U	10 U
2-Chlorophenol	5.0 U	10 U	10 U	10 U
1,3-Dichlorobenzene	5.0 U	10 U	10 U	10 U
1,4-Dichlorobenzene	5.0 U	10 U	10 U	10 U
Benzyl Alcohol	5.0 U	10 U	10 U	10 U
1,2-Dichlorobenzene	5.0 U	10 U	10 U	10 U
2-Methylphenol	5.0 U	10 U	10 U	10 U
Bis(2-chloroisopropyl) Ether	5.0 U	10 U	10 U	10 U
4-Methylphenol	5.0 U	10 U	10 U	10 U
N-Nitrosodipropylamine	5.0 U	10 U	10 U	10 U
Hexachloroethane	5.0 U	10 U	10 U	10 U
Nitrobenzene	5.0 U	10 U	10 U	10 U
Isophorone	5.0 U	10 U	10 U	10 U
2-Nitrophenol	5.0 U	10 U	10 U	10 U
2,4-Dimethylphenol	5.0 U	10 U	10 U	10 U
Benzoic Acid	25 U	50 U	50 U	50 U
Bis(2-chloroethoxy)methane	5.0 U	10 U	10 U	10 U
2,4-Dichlorophenol	5.0 U	10 U	10 U	10 U
1,2,4-Trichlorobenzene	5.0 U	10 U	10 U	10 U
Naphthalene	5.0 U	10 U	10 U	10 U
4-Chloroaniline	5.0 U	10 U	10 U	10 U
Hexachlorobutadiene	5.0 U	10 U	10 U	10 U
4-Chloro-3-methylphenol	5.0 U	10 U	10 U	10 U
2-Methylnaphthalene	5.0 U	10 U	10 U	10 U
Hexachlorocyclopentadiene	5.0 U	10 U	10 U	10 U
2,4,6-Trichlorophenol	25 U	50 U	50 U	50 U
2,4,5-Trichlorophenol	5.0 U	10 U	10 U	10 U
2-Chloronaphthalene	5.0 U	10 U	10 U	10 U
2-Nitroaniline	25 U	50 U	50 U	50 U
Dimethyl Phthalate	5.0 U	10 U	10 U	10 U
Acenaphthylene	5.0 U	10 U	10 U	10 U
3-Nitroaniline	25 U	50 U	50 U	50 U
Acenaphthene	5.0 U	10 U	10 U	10 U
2,4-Dinitrophenol	25 U	50 U	50 U	50 U
Units	(ug/l)	(ug/l)	(ug/l)	(ug/l)

V. Analytical Results (Cont'd)

AnalytiKEM

Semivolatile Organics (Page 2 of 2)

Parameter	Method Blank	A82351-10 MW 10	A82351-11 MW 11	A82351-12 MW 12
		Sample Designation		
4-Nitrophenol	25 U	50 U	50 U	50 U
Dibenzofuran	5.0 U	10 U	10 U	10 U
2,4-Dinitrotoluene	5.0 U	10 U	10 U	10 U
2,6-Dinitrotoluene	5.0 U	10 U	10 U	10 U
Diethyl Phthalate	5.0 U	10 U	10 U	10 U
4-Chlorophenyl Phenyl Ether	5.0 U	10 U	10 U	10 U
Fluorene	5.0 U	10 U	10 U	10 U
4-Nitroaniline	25 U	50 U	50 U	50 U
4,6-Dinitro-2-methylphenol	25 U	50 U	50 U	50 U
N-Nitrosodiphenylamine	5.0 U	10 U	10 U	10 U
4-Bromophenyl Phenyl Ether	5.0 U	10 U	10 U	10 U
Hexachlorobenzene	5.0 U	10 U	10 U	10 U
Pentachlorophenol	5.0 U	10 U	10 U	10 U
Phenanthrene	5.0 U	10 U	10 U	10 U
Anthracene	5.0 U	10 U	10 U	10 U
Dibutyl Phthalate	5.0 U	10 U	10 U	10 U
Fluoranthene	5.0 U	10 U	10 U	10 U
Benzidine	25 U	50 U	50 U	50 U
Pyrene	5.0 U	10 U	10 U	10 U
Butylbenzyl Phthalate	5.0 U	10 U	10 U	10 U
3,3'-Dichlorobenzidine	10 U	20 U	20 U	20 U
Benzo(a)anthracene	5.0 U	10 U	10 U	10 U
Bis(2-ethylhexyl) Phthalate	5.0 U	3.4 J	29	26
Chrysene	5.0 U	10 U	10 U	10 U
Dioctyl Phthalate	5.0 U	10 U	10 U	10 U
Benzo(b)fluoranthene	5.0 U	10 U	10 U	10 U
Benzo(k)fluoranthene	5.0 U	10 U	10 U	10 U
Benzo(a)pyrene	5.0 U	10 U	10 U	10 U
Indeno(1,2,3-cd)pyrene	5.0 U	10 U	10 U	10 U
Dibenzo(a,h)anthracene	5.0 U	10 U	10 U	10 U
Benzo(g,h,i)perylene	5.0 U	10 U	10 U	10 U
Units	(ug/l)	(ug/l)	(ug/l)	(ug/l)

V. Analytical Results (Cont'd)

AnalytiKEM

Semivolatile Organics (Page 1 of 2)

Parameter	Sample Designation: Method Blank	A82351-13 MW 13	A82351-14 W
N-Nitrosodimethylamine	5.0 U	10 U	10 U
Phenol	5.0 U	4.2 J	10 U
Bis(2-chloroethyl) Ether	5.0 U	10 U	10 U
2-Chlorophenol	5.0 U	10 U	10 U
1,3-Dichlorobenzene	5.0 U	10 U	10 U
1,4-Dichlorobenzene	5.0 U	10 U	10 U
Benzyl Alcohol	5.0 U	10 U	10 U
1,2-Dichlorobenzene	5.0 U	10 U	10 U
2-Methylphenol	5.0 U	10 U	10 U
Bis(2-chloroisopropyl) Ether	5.0 U	10 U	10 U
4-Methylphenol	5.0 U	10 U	10 U
N-Nitrosodipropylamine	5.0 U	10 U	10 U
Hexachloroethane	5.0 U	10 U	10 U
Nitrobenzene	5.0 U	10 U	10 U
Isophorone	5.0 U	10 U	10 U
2-Nitrophenol	5.0 U	10 U	10 U
2,4-Dimethylphenol	5.0 U	10 U	10 U
Benzoic Acid	25 U	50 U	50 U
Bis(2-chloroethoxy)methane	5.0 U	10 U	10 U
2,4-Dichlorophenol	5.0 U	10 U	10 U
1,2,4-Trichlorobenzene	5.0 U	10 U	10 U
Naphthalene	5.0 U	10 U	10 U
4-Chloroaniline	5.0 U	10 U	10 U
Hexachlorobutadiene	5.0 U	10 U	10 U
4-Chloro-3-methylphenol	5.0 U	10 U	10 U
2-Methylnaphthalene	5.0 U	10 U	10 U
Hexachlorocyclopentadiene	5.0 U	10 U	10 U
2,4,6-Trichlorophenol	25 U	50 U	50 U
2,4,5-Trichlorophenol	5.0 U	10 U	10 U
2-Chloronaphthalene	5.0 U	10 U	10 U
2-Nitroaniline	25 U	50 U	50 U
Dimethyl Phthalate	5.0 U	10 U	10 U
Acenaphthylene	5.0 U	10 U	10 U
3-Nitroaniline	25 U	50 U	50 U
Acenaphthene	5.0 U	10 U	10 U
2,4-Dinitrophenol	25 U	50 U	50 U
Units	(ug/l)	(ug/l)	(ug/l)

V. Analytical Results (Cont'd)

AnalytiKEM

Semivolatile Organics (Page 2 of 2)

Parameter	Sample Designation: Method Blank		A82351-13 MW 13		A82351-14 W	
4-Nitrophenol	25	U	50	U	50	U
Dibenzofuran	5.0	U	10	U	10	U
2,4-Dinitrotoluene	5.0	U	10	U	10	U
2,6-Dinitrotoluene	5.0	U	10	U	10	U
Diethyl Phthalate	5.0	U	10	U	10	U
4-Chlorophenyl Phenyl Ether	5.0	U	10	U	10	U
Fluorene	5.0	U	10	U	10	U
4-Nitroaniline	25	U	50	U	50	U
4,6-Dinitro-2-methylphenol	25	U	50	U	50	U
N-Nitrosodiphenylamine	5.0	U	3.1	J	10	U
4-Bromophenyl Phenyl Ether	5.0	U	10	U	10	U
Hexachlorobenzene	5.0	U	10	U	10	U
Pentachlorophenol	5.0	U	10	U	10	U
Phenanthrene	5.0	U	10	U	10	U
Anthracene	5.0	U	10	U	10	U
Dibutyl Phthalate	5.0	U	12		2.0	J
Fluoranthene	5.0	U	10	U	10	U
Benzidine	25	U	50	U	50	U
Pyrene	5.0	U	10	U	10	U
Butylbenzyl Phthalate	5.0	U	10	U	10	U
3,3'-Dichlorobenzidine	10	U	20	U	20	U
Benzo(a)anthracene	5.0	U	10	U	10	U
Bis(2-ethylhexyl) Phthalate	5.0	U	120		40	
Chrysene	5.0	U	10	U	10	U
Dioctyl Phthalate	5.0	U	10	U	10	U
Benzo(b)fluoranthene	5.0	U	10	U	10	U
Benzo(k)fluoranthene	5.0	U	10	U	10	U
Benzo(a)pyrene	5.0	U	10	U	10	U
Indeno(1,2,3-cd)pyrene	5.0	U	10	U	10	U
Dibenzo(a,h)anthracene	5.0	U	10	U	10	U
Benzo(g,h,i)perylene	5.0	U	10	U	10	U
Units	(ug/l)		(ug/l)		(ug/l)	

V. Analytical Results (Cont'd)

AnalytiKEM

Semivolatile Organics (Page 1 of 2)

Parameter	Method Blank	A82351-4 MW 4	A82351-5 MW 5	A82351-6 MW 6
		Sample Designation		
N-Nitrosodimethylamine	10 U	10 U	10 U	10 U
Phenol	10 U	10 U	10 U	10 U
Bis(2-chloroethyl) Ether	10 U	10 U	10 U	10 U
2-Chlorophenol	10 U	10 U	10 U	10 U
1,3-Dichlorobenzene	10 U	10 U	10 U	10 U
1,4-Dichlorobenzene	10 U	10 U	10 U	10 U
Benzyl Alcohol	10 U	10 U	10 U	10 U
1,2-Dichlorobenzene	10 U	10 U	10 U	10 U
2-Methylphenol	10 U	10 U	10 U	10 U
4-Methylphenol	10 U	10 U	10 U	10 U
N-Nitrosodipropylamine	10 U	10 U	10 U	10 U
Hexachloroethane	10 U	10 U	10 U	10 U
Nitrobenzene	10 U	10 U	10 U	10 U
Isophorone	10 U	10 U	10 U	10 U
2-Nitrophenol	10 U	10 U	10 U	10 U
2,4-Dimethylphenol	10 U	10 U	10 U	10 U
Bis(2-chloroethoxy)methane	10 U	10 U	10 U	10 U
2,4-Dichlorophenol	10 U	10 U	10 U	10 U
1,2,4-Trichlorobenzene	10 U	10 U	10 U	10 U
Naphthalene	10 U	13	42	10 U
4-Chloroaniline	10 U	10 U	10 U	10 U
Hexachlorobutadiene	10 U	10 U	10 U	10 U
4-Chloro-3-methylphenol	10 U	10 U	10 U	10 U
2-Methylnaphthalene	10 U	12	11	10 U
Hexachlorocyclopentadiene	10 U	10 U	10 U	10 U
2,4,6-Trichlorophenol	50 U	50 U	50 U	50 U
2,4,5-Trichlorophenol	10 U	10 U	10 U	10 U
2-Chloronaphthalene	10 U	10 U	10 U	10 U
2-Nitroaniline	50 U	50 U	50 U	50 U
Dimethyl Phthalate	10 U	10 U	10 U	10 U
Acenaphthylene	10 U	10 U	10 U	10 U
3-Nitroaniline	50 U	50 U	50 U	50 U
Acenaphthene	10 U	10 U	10 U	10 U
2,4-Dinitrophenol	50 U	50 U	50 U	50 U
Units	(ug/l)	(ug/l)	(ug/l)	(ug/l)

Note: The Semivolatile Organics analysis on these samples was performed at our Cherry Hill, NJ facility.

V. Analytical Results (Cont'd)

AnalytiKEM

Semivolatile Organics (Page 2 of 2)

Parameter	Method Blank	A82351-4 MW 4	A82351-5 MW 5	A82351-6 MW 6
		Sample Designation		
4-Nitrophenol	50 U	50 U	50 U	50 U
Dibenzofuran	10 U	10 U	10 U	10 U
2,4-Dinitrotoluene	10 U	10 U	10 U	10 U
2,6-Dinitrotoluene	10 U	10 U	10 U	10 U
Diethyl Phthalate	10 U	1.1 J	10 U	10 U
4-Chlorophenyl Phenyl Ether	10 U	10 U	10 U	10 U
Fluorene	10 U	10 U	10 U	10 U
4-Nitroaniline	50 U	50 U	50 U	50 U
4,6-Dinitro-2-methylphenol	50 U	50 U	50 U	50 U
N-Nitrosodiphenylamine	10 U	10 U	10 U	10 U
4-Bromophenyl Phenyl Ether	10 U	10 U	10 U	10 U
Hexachlorobenzene	10 U	10 U	10 U	10 U
Pentachlorophenol	10 U	10 U	10 U	10 U
Phenanthrene	10 U	10 U	10 U	10 U
Anthracene	10 U	10 U	10 U	10 U
Dibutyl Phthalate	10 U	10 U	10 U	10 U
Fluoranthene	10 U	10 U	10 U	10 U
Pyrene	10 U	10 U	10 U	10 U
Butylbenzyl Phthalate	10 U	10 U	10 U	10 U
3,3'-Dichlorobenzidine	20 U	20 U	20 U	20 U
Benzo(a)anthracene	10 U	10 U	10 U	10 U
Bis(2-ethylhexyl) Phthalate	10 U	160	75	56
Chrysene	10 U	10 U	10 U	10 U
Dioctyl Phthalate	10 U	10 U	10 U	10 U
Benzo(b)fluoranthene	10 U	10 U	10 U	10 U
Benzo(k)fluoranthene	10 U	10 U	10 U	10 U
Benzo(a)pyrene	10 U	10 U	10 U	10 U
Indeno(1,2,3-cd)pyrene	10 U	10 U	10 U	10 U
Dibenzo(a,h)anthracene	10 U	10 U	10 U	10 U
Benzo(g,h,i)perylene	10 U	10 U	10 U	10 U
Units	(ug/l)	(ug/l)	(ug/l)	(ug/l)

Note: The Semivolatile Organics analysis on these samples was performed at our Cherry Hill, NJ facility.

V. Analytical Results (Cont'd)

AnalytiKEM

Semivolatile Organics Appendix IX Compounds (Page 1 of 2)

Parameter	Method Blank	A82351-4 MW 4	A82351-5 MW 5	A82351-6 MW 6
		Sample Designation		
Pyridine	10 U	10 U	10 U	10 U
2-Picoline	10 U	10 U	10 U	10 U
N-Nitrosomethylethylamine	10 U	10 U	10 U	10 U
Methylmethanesulfonate	10 U	10 U	10 U	10 U
N-Nitrosodiethylamine	10 U	10 U	10 U	10 U
Ethylmethanesulfonate	10 U	10 U	10 U	10 U
Aniline	10 U	10 U	10 U	10 U
Acetophenone	10 U	10 U	10 U	10 U
N-Nitrosopyrrolidine	10 U	10 U	10 U	10 U
N-Nitrosomorpholine	10 U	10 U	10 U	10 U
3-Methylphenol	10 U	10 U	10 U	10 U
o-Toluidine	10 U	10 U	10 U	10 U
N-Nitrosopiperidine	10 U	10 U	10 U	10 U
O,O,O-Triethylphosphorothioate	10 U	10 U	10 U	10 U
2,6-Dichlorophenol	10 U	10 U	10 U	10 U
Hexachloropropene	10 U	10 U	10 U	10 U
α,α,-Dimethylphenethylamine	10 U	10 U	10 U	10 U
N-Nitrosodi-n-butylamine	10 U	10 U	10 U	10 U
Safrole	10 U	10 U	10 U	10 U
1,2,4,5-Tetrachlorobenzene	10 U	10 U	10 U	10 U
Isosafrole	10 U	10 U	10 U	10 U
1,4-Naphthoquinone	10 U	10 U	10 U	10 U
1,3-Dinitrobenzene	10 U	10 U	10 U	10 U
Pentachlorobenzene	10 U	10 U	10 U	10 U
1-Napthylamine	10 U	10 U	10 U	10 U
2-Napthylamine	10 U	10 U	10 U	10 U
2,3,4,6-Tetrachlorophenol	10 U	10 U	10 U	10 U
Thionazin	10 U	10 U	10 U	10 U
5-Nitro-o-toluidine	10 U	10 U	10 U	10 U
p-Phenylenediamine	10 U	10 U	10 U	10 U
Sulfotepp	10 U	10 U	10 U	10 U
Phorate	10 U	10 U	10 U	10 U
Phenacetin	10 U	10 U	10 U	10 U
Diallate	10 U	10 U	10 U	10 U
Dimethoate	10 U	10 U	10 U	10 U
1,3,5-Trinitrobenzene	10 U	10 U	10 U	10 U
4-Aminobiphenyl	10 U	10 U	10 U	10 U
Units	(ug/l)	(ug/l)	(ug/l)	(ug/l)

Note: The Semivolatile Organics analysis on these samples was performed at our Cherry Hill, NJ facility.

V. Analytical Results (Cont'd)

AnalytiKEM

Semivolatile Organics Appendix IX Compounds (Page 2 of 2)

Parameter	Method Blank	A82351-4 MW 4	A82351-5 MW 5	A82351-6 MW 6
	Sample Designation			
Pronamide	10 U	10 U	10 U	10 U
Pentachloronitrobenzene	10 U	10 U	10 U	10 U
Disulfoton	10 U	10 U	10 U	10 U
Dinoseb	10 U	10 U	10 U	10 U
Hexachlorophene	10 U	10 U	10 U	10 U
Methylparathion	10 U	10 U	10 U	10 U
4-Nitroquinoline-1-oxide	10 U	10 U	10 U	10 U
Methapyrilene	10 U	10 U	10 U	10 U
Isodrin	10 U	10 U	10 U	10 U
Parathion	10 U	10 U	10 U	10 U
p-(Dimethylamino)Azobenzene	10 U	10 U	10 U	10 U
Chlorobenzilate	10 U	10 U	10 U	10 U
Famphur	10 U	10 U	10 U	10 U
3,3'-Dimethylbenzidine	10 U	10 U	10 U	10 U
Kepone	10 U	10 U	10 U	10 U
Aramite	10 U	10 U	10 U	10 U
3-Methylchlolanthrene	10 U	10 U	10 U	10 U
7,12-Dimethylbenz(a)anthracene	10 U	10 U	10 U	10 U
Units	(ug/l)	(ug/l)	(ug/l)	(ug/l)

Note: The Semivolatile Organics analysis on these samples was performed at our Cherry Hill, NJ facility.

V. Analytical Results (Cont'd)

AnalytiKEM

Semivolatile Organics (Page 1 of 2)

Parameter	Sample Designation: Method Blank	Sample Designation: A82351-15 DC
N-Nitrosodimethylamine	330 U	330 U
Phenol	330 U	330 U
Bis(2-chloroethyl) Ether	330 U	330 U
2-Chlorophenol	330 U	330 U
1,3-Dichlorobenzene	330 U	330 U
1,4-Dichlorobenzene	330 U	330 U
Benzyl Alcohol	330 U	330 U
1,2-Dichlorobenzene	330 U	330 U
2-Methylphenol	330 U	330 U
Bis(2-chloroisopropyl) Ether	330 U	330 U
4-Methylphenol	330 U	330 U
N-Nitrosodipropylamine	330 U	330 U
Hexachloroethane	330 U	330 U
Nitrobenzene	330 U	330 U
Isophorone	330 U	330 U
2-Nitrophenol	330 U	330 U
2,4-Dimethylphenol	330 U	330 U
Benzoic Acid	1,600 U	1,600 U
Bis(2-chloroethoxy)methane	330 U	330 U
2,4-Dichlorophenol	330 U	330 U
1,2,4-Trichlorobenzene	330 U	330 U
Naphthalene	330 U	330 U
4-Chloroaniline	330 U	330 U
Hexachlorobutadiene	330 U	330 U
4-Chloro-3-methylphenol	330 U	330 U
2-Methylnaphthalene	330 U	330 U
Hexachlorocyclopentadiene	330 U	330 U
2,4,6-Trichlorophenol	330 U	330 U
2,4,5-Trichlorophenol	1,600 U	1,600 U
2-Chloronaphthalene	330 U	330 U
2-Nitroaniline	1,600 U	1,600 U
Dimethyl Phthalate	330 U	330 U
Acenaphthylene	330 U	330 U
3-Nitroaniline	1,600 U	1,600 U
Acenaphthene	330 U	330 U
2,4-Dinitrophenol	1,600 U	1,600 U
Units	(ug/kg)	(ug/kg)

V. Analytical Results (Cont'd)

AnalytiKEM

Semivolatile Organics (Page 2 of 2)

Parameter	Sample Designation: Method Blank	Sample Designation: A82351-15 DC
4-Nitrophenol	1,600 U	1,600 U
Dibenzofuran	330 U	330 U
2,4-Dinitrotoluene	330 U	330 U
2,6-Dinitrotoluene	330 U	330 U
Diethyl Phthalate	330 U	330 U
4-Chlorophenyl Phenyl Ether	330 U	330 U
Fluorene	330 U	330 U
4-Nitroaniline	1,600 U	1,600 U
4,6-Dinitro-2-methylphenol	1,600 U	1,600 U
N-Nitrosodiphenylamine	330 U	330 U
4-Bromophenyl Phenyl Ether	330 U	330 U
Hexachlorobenzene	330 U	330 U
Pentachlorophenol	330 U	330 U
Phenanthrene	330 U	330 U
Anthracene	330 U	48 J
Dibutyl Phthalate	36 J	330 U
Fluoranthene	330 U	330 U
Benzidine	1,600 U	1,600 U
Pyrene	330 U	330 U
Butylbenzyl Phthalate	330 U	330 U
3,3'-Dichlorobenzidine	660 U	660 U
Benzo(a)anthracene	330 U	330 U
Bis(2-ethylhexyl) Phthalate	1,700	1,500
Chrysene	330 U	330 U
Dioctyl Phthalate	330 U	330 U
Benzo(b)fluoranthene	330 U	330 U
Benzo(k)fluoranthene	330 U	330 U
Benzo(a)pyrene	330 U	330 U
Indeno(1,2,3-cd)pyrene	330 U	330 U
Dibenzo(a,h)anthracene	330 U	330 U
Benzo(g,h,i)perylene	330 U	330 U
Units	(ug/kg)	(ug/kg)

V. Analytical Results (Cont'd)

AnalytiKEM

General Chromatography

Parameter	Method Blank	A82351-9 MW 9	A82351-10 MW 10	A82351-11 MW 11
	Sample Designation			
n-Butanol	600 U	600 U	600 U	600 U
Isopropanol	600 U	600 U	600 U	600 U
Methanol	600 U	650	600 U	600 U
Ethanol	600 U	600 U	600 U	600 U
Units	(ug/l)	(ug/l)	(ug/l)	(ug/l)

Parameter	Method Blank	A82351-12 MW 12	A82351-13 MW 13
	Sample Designation		
n-Butanol	600 U	600 U	600 U
Isopropanol	600 U	600 U	2,800
Methanol	600 U	600 U	600 U
Ethanol	600 U	600 U	600 U
Units	(ug/l)	(ug/l)	(ug/l)

VI. Quality Control Data

AnalytiKEM

Volatile Organics

Aqueous Matrix Spike/Matrix Spike Duplicate Recovery Data

Sample Spiked A82351-3

Parameter	Amount of Spike	Recovery MS	Recovery MSD	RPD	Control Limits Recovery	Control Limits Max. RPD
1,1-Dichloroethene	0.25	91	88	3	79-121	10
Trichloroethene (TCE)	0.25	94	94	0	82-120	7
Benzene	0.25	95	95	0	70-136	8
Toluene	0.25	92	91	1	74-128	15
Chlorobenzene	0.25	102	102	0	78-118	5
Units	(ug)	(%)	(%)	(%)	(%)	(%)

Recovery: 0 out of 10 outside control limits

RPD: 0 out of 5 outside control limits

Aqueous Surrogate Recovery Data

Sample Designation	Surrogate Recovery: 1,2-Dichloroethane-d_4 (50 ppb Added)	Toluene-d_8 (50 ppb Added)	4-Bromofluorobenzene (50 ppb Added)
Method Blank 1	95	99	99
A82351-3 Spike	98	94	96
A82351-3 Spike Dup.	98	93	96
A82351-1	99	101	99
A82351-2	101	105	98
A82351-3	104	102	98
A82351-7	103	102	99
A82351-12	104	101	99
A82351-13	104	100	98
A82351-14 Rerun	98	100	100
Units	(%)	(%)	(%)
Control Limits	76-114	88-110	86-115

0 out of 30 surrogate recoveries are outside control limits.

VI. Quality Control Data (Cont'd)

AnalytiKEM

Volatile Organics

Aqueous Matrix Spike/Matrix Spike Duplicate Recovery Data

Sample Spiked A82351-11

Parameter	Amount of Spike	Recovery MS	Recovery MSD	RPD	Control Limits Recovery	Control Limits Max. RPD
1,1-Dichloroethene	0.25	96	94	2	79-121	10
Trichloroethene (TCE)	0.25	92	92	0	82-120	7
Benzene	0.25	93	93	0	70-136	8
Toluene	0.25	96	96	0	74-128	15
Chlorobenzene	0.25	95	96	1	78-118	5
Units	(ug)	(%)	(%)	(%)	(%)	(%)

Recovery: 0 out of 10 outside control limits

RPD: 0 out of 5 outside control limits

Aqueous Surrogate Recovery Data

Sample Designation	Surrogate Recovery: 1,2-Dichloroethane-d_4 (50 ppb Added)	Toluene-d_8 (50 ppb Added)	4-Bromofluorobenzene (50 ppb Added)
Method Blank 2	102	109	108
Method Blank 3	91	97	89
A82351-11 Spike	93	97	91
A82351-11 Spike Dup.	93	97	92
A82351-8	102	109	106
A82351-9	105	111	107
A82351-10	105	108	107
A82351-11	106	111	110
A82351-14	88	98	91
Units	(%)	(%)	(%)
Control Limits	87-130	74-121	71-137

0 out of 27 surrogate recoveries are outside control limits.

VI. Quality Control Data (Cont'd)

AnalytiKEM

Volatile Organics

Aqueous Matrix Spike/Matrix Spike Duplicate Recovery Data

Sample Spiked A27667-5

Parameter	Amount of Spike	Recovery MS	Recovery MSD	RPD	Control Limits Recovery	Control Limits Max. RPD
1,1-Dichloroethene	0.25	100	95	5	61-145	14
Trichloroethene (TCE)	0.25	97	91	6	71-121	14
Chlorobenzene	0.25	108	104	3	75-130	13
Toluene	0.25	107	103	4	76-125	13
Benzene	0.25	108	103	5	76-127	11
Units	(ug)	(%)	(%)	(%)	(%)	(%)

Recovery: 0 out of 10 outside control limits

RPD: 0 out of 5 outside control limits

Aqueous Surrogate Recovery Data

Sample Designation	Surrogate Recovery: 1,2-Dichloroethane-d_4 (0.25 ug Added)	Toluene-d_8 (0.25 ug Added)	4-Bromofluorobenzene (0.25 ug Added)
Method Blank 4	96	102	103
A27667-5 Spike	101	102	100
A27667-5 Spike Dup.	103	100	103
A82351-4	98	104	102
A82351-4 Rerun	91	103	93
A82351-5	97	107	107
A82351-6	96	100	101
Units	(%)	(%)	(%)
Control Limits	76-114	88-110	86-115

0 out of 21 surrogate recoveries are outside control limits.

VI. Quality Control Data (Cont'd)

AnalytiKEM

Volatile Organics

Nonaqueous Matrix Spike/Matrix Spike Duplicate Recovery Data

Sample Spiked A82336-1

Parameter	Amount of Spike	Recovery MS	Recovery MSD	RPD	Control Limits Recovery
1,1-Dichloroethene	0.25	92	94	2	D-234
Trichloroethene (TCE)	0.25	87	92	6	71-157
Benzene	0.25	89	95	6	37-151
Toluene	0.25	90	94	4	47-150
Chlorobenzene	0.25	88	94	6	37-160
Units	(ug)	(%)	(%)	(%)	(%)

Recovery: 0 out of 10 outside control limits

Nonaqueous Surrogate Recovery Data

Sample Designation	Surrogate Recovery: 1,2-Dichloroethane-d_4 (100 ppb Added)	Toluene-d_8 (100 ppb Added)	4-Bromofluorobenzene (100 ppb Added)
Method Blank 5	99	101	99
A82336-1 Spike	94	93	93
A82336-1 Spike Dup.	96	94	95
A82351-15	92	92	90
Units	(%)	(%)	(%)
Control Limits	70-121	81-117	74-121

0 out of 12 surrogate recoveries are outside control limits.

VI. Quality Control Data (Cont'd)

AnalytiKEM

Semivolatile Organics

Aqueous Matrix Spike/Matrix Spike Duplicate Recovery Data

Sample Spiked A82387-1

Parameter	Amount of Spike	Recovery MS	Recovery MSD	RPD	Control Limits Recovery	Control Limits Max. RPD
1,4-Dichlorobenzene	50	47	44	6	10-110	15
N-Nitrosodipropylamine	50	52	44	17	10-151	27
1,2,4-Trichlorobenzene	50	53	50	6	20-136	24
Acenaphthene	50	65	57	13	17-120	5
Acenaphthene ϕ	50	62	--	--	17-120	5
2,4-Dinitrotoluene	50	45	46	2	10-175	17
Pyrene	50	77	64	18	10-175	19
Phenol	100	*	*	--	10-130	18
Phenol ϕ	100	27	--	--	10-130	18
2-Chlorophenol	100	*	*	--	47-106	16
2-Chlorophenol ϕ	100	44	--	--	47-106	16
4-Chloro-3-methylphenol	100	*	*	--	48-115	30
4-Chloro-3-methylphenol ϕ	100	51	--	--	48-115	30
4-Nitrophenol	100	*	*	--	10-175	30
4-Nitrophenol ϕ	100	12	--	--	10-175	30
Pentachlorophenol	100	12	24	67	64-118	11
Pentachlorophenol ϕ	100	48	--	--	64-118	11
Units	(ppb)	(%)	(%)	(%)	(%)	(%)

* Not recovered due to matrix interference.

ϕ Spike performed on DI Water.

Recovery: 4 out of 20 outside control limits

RPD: 2 out of 7 outside control limits

VI. Quality Control Data (Cont'd)

AnalytiKEM

Semivolatile Organics

Aqueous Surrogate Recovery Data

Sample Designation	Surrogate Recovery 2-Fluorophenol (100 ppb Added)	Phenol-d_5 (100 ppb Added)	2,4,6-Tribromophenol (100 ppb Added)
Method Blank	42	31	59
A82387-1 Spike	*	*	*
A82387-1 Spike Dup.	*	*	*
A82351-1	45	33	66
A82351-2	38	29	74
A82351-3	42	31	65
A82351-7	*	*	23
A82351-7 Rerun	*	*	*
A82351-8	40	30	64
A82351-9	43	30	62
A82351-10	41	30	66
A82351-11	40	30	62
A82351-12	33	23	39
A82351-13	43	33	57
Units	(%)	(%)	(%)
Control Limits	10-90	10-90	10-142

Sample Designation	Surrogate Recovery Nitrobenzene-d_5 (50 ppb Added)	2-Fluorobiphenyl (50 ppb Added)	Terphenyl-d_{14} (50 ppb Added)
Method Blank	59	65	89
A82387-1 Spike	53	66	76
A82387-1 Spike Dup.	48	57	62
A82351-1	82	85	107
A82351-2	66	69	90
A82351-3	72	74	76
A82351-7	71	72	88
A82351-7 Rerun	79	78	122
A82351-8	60	63	74
A82351-9	66	69	85
A82351-10	58	64	80
A82351-11	57	61	76
A82351-12	65	69	88
A82351-13	85	86	115
Units	(%)	(%)	(%)
Control Limits	10-133	10-165	10-175

0 out of 73 surrogate recoveries are outside control limits.

* Not recovered due to matrix interference.

VI. Quality Control Data (Cont'd)

AnalytiKEM

Semivolatile Organics

Aqueous Matrix Spike/Matrix Spike Duplicate Recovery Data

Sample Spiked A73723-Eff.

Parameter	Amount of Spike	Recovery MS	Recovery MSD	RPD	Control Limits Recovery	Control Limits Max. RPD
1,4-Dichlorobenzene	50	50	48	4	10-110	15
N-Nitrosodipropylamine	50	50	50	0	10-151	27
1,2,4-Trichlorobenzene	50	56	57	2	20-136	24
Acenaphthene	50	66	68	3	17-120	5
2,4-Dinitrotoluene	50	59	63	6	10-175	17
Pyrene	50	84	82	2	10-175	19
Phenol	100	32	26	21	10-130	18
2-Chlorophenol	100	48	48	0	47-106	16
4-Chloro-3-methylphenol	100	53	58	9	48-115	30
4-Nitrophenol	100	22	18	20	10-175	30
Pentachlorophenol	100	65	73	12	64-118	11
Units	(ppb)	(%)	(%)	(%)	(%)	(%)

Recovery: 2 out of 22 outside control limits

RPD: 2 out of 11 outside control limits

VI. Quality Control Data (Cont'd)

AnalytiKEM

Semivolatile Organics

Aqueous Surrogate Recovery Data

Sample Designation	Surrogate Recovery 2-Fluorophenol (100 ppb Added)	Phenol-d_5 (100 ppb Added)	2,4,6-Tribromophenol (100 ppb Added)
Method Blank	42	31	59
A73723-Eff. Spike	27	31	60
A73723-Eff. Spike Dup.	18	26	68
A82351-14	40	26	78
Units	(%)	(%)	(%)
Control Limits	10-90	10-90	10-142

Sample Designation	Surrogate Recovery Nitrobenzene-d_5 (50 ppb Added)	2-Fluorobiphenyl (50 ppb Added)	Terphenyl-d_{14} (50 ppb Added)
Method Blank	59	65	89
A73723-Eff. Spike	53	67	81
A73723-Eff. Spike Dup.	53	69	79
A82351-14	74	77	154
Units	(%)	(%)	(%)
Control Limits	10-133	10-165	10-175

0 out of 24 surrogate recoveries are outside control limits.

VI. Quality Control Data (Cont'd)

AnalytiKEM

Semivolatile Organics

Aqueous Matrix Spike/Matrix Spike Duplicate Recovery Data

Sample Spiked A27694-9

Parameter	Amount of Spike	Recovery MS	Recovery MSD	RPD	Control Limits Recovery	Control Limits Max. RPD
1,4-Dichlorobenzene	100	82	77	6	14-114	31
N-Nitrosodipropylamine	100	54	48	12	20-100	33
1,2,4-Trichlorobenzene	100	81	73	10	29-112	26
Acenaphthene	100	82	80	2	29-117	20
2,4-Dinitrotoluene	100	55	53	4	21-118	38
Pyrene	100	102	107	5	40-133	25
Phenol	200	44	38	15	26-133	39
2-Chlorophenol	200	59	55	7	33-102	18
4-Chloro-3-methylphenol	200	54	46	16	27-108	32
4-Nitrophenol	200	22	18	10	10-75	50
Pentachlorophenol	200	69	51	30	28-120	43
Units	(ug)	(%)	(%)	(%)	(%)	(%)

Recovery: 0 out of 22 outside control limits

RPD: 0 out of 11 outside control limits

VI. Quality Control Data (Cont'd)

AnalytiKEM

Semivolatile Organics

Aqueous Surrogate Recovery Data

Surrogate Recovery

Sample Designation	2-Fluorophenol (200 ug Added)	Phenol-d_5 (200 ug Added)	2,4,6-Tribromophenol (200 ug Added)
Method Blank	84	99	110
A27694-9 Spike	66	52	103
A27694-9 Spike Dup.	59	46	85
A82351-4	35	21	109
A82351-5	38	36	121
A82351-6	47	37	117
Units	(%)	(%)	(%)
Control Limits	10-109	13-104	27-122

Surrogate Recovery

Sample Designation	Nitrobenzene-d_5 (100 ug Added)	2-Fluorobiphenyl (100 ug Added)	Terphenyl-d_{14} (100 ug Added)
Method Blank	72	98	109
A27694-9 Spike	54	94	89
A27694-9 Spike Dup.	49	91	94
A82351-4	68	72	97
A82351-5	58	66	86
A82351-6	93	79	88
Units	(%)	(%)	(%)
Control Limits	23-103	27-114	32-116

0 out of 36 surrogate recoveries are outside control limits.

VI. Quality Control Data (Cont'd)

AnalytiKEM

Semivolatile Organics

Nonaqueous Matrix Spike/Matrix Spike Duplicate Recovery Data

Sample Spiked A82337-1

Parameter	Amount of Spike	Recovery MS	Recovery MSD	RPD	Control Limits Recovery	Control Limits Max. RPD
1,4-Dichlorobenzene	50	81	76	6	18-120	43
N-Nitrosodipropylamine	50	80	122	42	10-156	31
N-Nitrosodipropylamine ϕ	50	77	--	--	10-156	31
1,2,4-Trichlorobenzene	50	79	75	5	24-161	17
Acenaphthene	50	91	84	8	10-151	16
2,4-Dinitrotoluene	50	85	73	15	10-197	33
Pyrene	50	91	81	12	10-167	31
Phenol	100	42	29	37	10-141	41
2-Chlorophenol	100	34	33	3	33-101	19
4-Chloro-3-methylphenol	100	49	39	23	26-117	25
4-Nitrophenol	100	46	35	27	10-221	36
Pentachlorophenol	100	38	20	62	10-179	16
Pentachlorophenol ϕ	100	35	--	--	10-179	16
Units	(ppb)	(%)	(%)	(%)	(%)	(%)

ϕ Spike performed on DI Water.

Recovery: 0 out of 24 outside control limits

RPD: 2 out of 11 outside control limits

VI. Quality Control Data (Cont'd)

AnalytiKEM

Semivolatile Organics

Nonaqueous Surrogate Recovery Data

Sample Designation	Surrogate Recovery 2-Fluorophenol (200 ppb Added)	Phenol-d_5 (200 ppb Added)	2,4,6-Tribromophenol (200 ppb Added)
Method Blank	78	82	70
A82337-1 Spike	64	76	83
A82337-1 Spike Dup.	56	54	56
DI Water Spike	73	81	91
A82351-15	78	79	67
Units	(%)	(%)	(%)
Control Limits	27-106	30-88	42-89

Sample Designation	Surrogate Recovery Nitrobenzene-d_5 (100 ppb Added)	2-Fluorobiphenyl (100 ppb Added)	Terphenyl-d_{14} (100 ppb Added)
Method Blank	97	95	144
A82337-1 Spike	70	82	96
A82337-1 Spike Dup.	70	73	80
DI Water Spike	74	86	95
A82351-15	96	96	154
Units	(%)	(%)	(%)
Control Limits	34-107	10-157	10-175

1 out of 30 surrogate recoveries are outside control limits.

VI. Quality Control Data (Cont'd)

AnalytiKEM

General Chromatography

Aqueous Matrix Spike/Matrix Spike Duplicate Recovery Data

Sample Spiked A73723-1

Parameter	Amount of Spike	Recovery MS	Recovery MSD	RPD	Control Limits Recovery	Control Limits Max. RPD
n-Butanol	4,000	114	112	2	67-130	5
Methanol	4,000	86	89	3	66-121	10
Ethanol	4,000	94	95	1	70-130	30
Isopropanol	4,000	90	90	0	70-130	30
Units	(ppb)	(%)	(%)	(%)	(%)	(%)

Recovery: 0 out of 8 outside control limits

RPD: 0 out of 4 outside control limits

AnalytiKEM An American NuKEM Company

AK # 82351

10318

Chain-of-Custody Record

Program Area: Drinking Water Wastewater Groundwater Solid and Hazardous Waste

Client: ENSCI **Sample Collector:** LENNON

Project: TFI LENOIR **AnalytiKEM Contact:** Grey

Laboratory	Sales Office
2324 Vernsdale Road Rock Hill, South Carolina 29731 (803) 324-5310 Fax: (803) 324-8378	454 South Anderson Road BTC 532 Rock Hill, South Carolina 29730 (803) 329-9690 Fax: (803) 329-9689

ITEM NUMBER	SAMPLE DESIGNATION	DATE	TIME	MATRIX	Grab or Composite	40 ml vials	950 ml Org. Pres.	ml Unpres.	ml HNO_3	ml H_2SO_4	ml NaOH	ml HCL				PARAMETERS
#1 1	MW1	6/11	1550	Aq	G	4										8240 TCL
1	MW1		1550				2									8270 Target Compound List (TCL)
2	MW2		1540			4										8240 TCL
#2 2	MW2		1540				2									8270 TCL
3	MW3		1540			4										8240 TCL
#3 3	MW3		1540				1									8270 TCL
4	MW4		1630			4										8240 Appendix IX
#4 4	MW4		1630				2									8270 (TCL) ~~TCL~~ Appendix 9 List
5	MW5		1550			4										8240 Appendix IX
#5 10	MW5		1550				2									8270 Appendix 9 List

TRANSFER NUMBER	ITEM NUMBER	TRANSFERS RELINQUISHED BY	TRANSFERS ACCEPTED BY	DATE	TIME
1	1-10	Bruce Broswell	Grady Lane	6/12/92	1330 ~~14:30~~
2	1-10	Grady Lane	Patsy Pope	6-12-92	1730
3					
4					

REMARKS: 6/15 Bruce changed for #4,5,10 for appendix IX

Jim L

SAMPLER'S SIGNATURE

Reorder: PJ Associates 803-329-2300 White Laboratory Copy Yellow Client Copy AKEM #1 12/89

AnalytiKEM An American NuKEM Compan AK 82351 00824

Chain-of-Custody Record

Program Area: Drinking Water Wastewater Groundwater Solid and Hazardous Waste

Client: ENSI **Sample Collector:** LENNON

Project: TFI LENOIR **AnalytiKEM Contact:** Greg

Laboratory	Sales Office
2324 Vernsdale Road Rock Hill, South Carolina 29731 (803) 324-5310 Fax: (803) 324-8378	454 South Anderson Road BTC 532 Rock Hill, South Carolina 29730 (803) 329-9690 Fax: (803) 329-9689

ITEM NUMBER	SAMPLE DESIGNATION	DATE	TIME	MATRIX	Grab or Composite	40 ml vials	950 ml Org. Pres.	ml Unpres.	ml HNO_3	ml H_2SO_4	ml NaOH	ml HCL				PARAMETERS
5	MW6	6/11	1600	Aqu	G	4										8240 TCL
6	MW6		1600				2									8270 TCL
7	MW7		1530			4										8240 TCL
7	MW7		1530				2									8270 TCL
8	MW8		1540			4										8240 TCL
8	MW8		1540				2									8270 TCL
9	MW9		1600			4										8240 TCL
9	MW9		1600				2									8270 TCL
10	MW10		1600			4										8240 TCL
10	MW10		1600				2									8270 TCL

#6 #7 #8 #9 #10

TRANSFER NUMBER	ITEM NUMBER	TRANSFERS RELINQUISHED BY	TRANSFERS ACCEPTED BY	DATE	TIME
1	1-10	Bruce Broswell	Grady Lane	6/12/92	1330
2	1-10	Grady Lane	Patty Pope	6-12-92	1730
3					
4					

REMARKS

SAMPLER'S SIGNATURE Jim Lenon

Reorder: PJ Associates 803-329-2300 White Laboratory Copy Yellow Client Copy AKEM #1 12/8

AnalytiKEM An American NuKEM Company 82351 00825

Chain-of-Custody Record

Program Area: Drinking Water Wastewater Groundwater Solid and Hazardous Waste

Client: ENSCI **Sample Collector:** LENNON

Project: TFI LENOIR **AnalytiKEM Contact:** Greg

Laboratory
2324 Vernsdale Road
Rock Hill, South Carolina 29731
(803) 324-5310
Fax: (803) 324-8378

Sales Office
454 South Anderson Road BTC 532
Rock Hill, South Carolina 29730
(803) 329-9690
Fax: (803) 329-9689

ITEM NUMBER	SAMPLE DESIGNATION	DATE	TIME	MATRIX	Grab or Composite	40 ml vials	950 ml Org. Pres.	ml ~~Unpres.~~ 500	ml HNO_3	ml H_2SO_4	ml NaOH	ml HCL				PARAMETERS
1	MW11	6/11	1530	Aqu	G	4										8240 TCL
2	MW11		1530	Aqu	G		2									8270 TCL
3	MW12		1540	Aqu	G	4										8240 TCL
4	MW12		1540	Aqu	G		2									8270 TCL
5	MW13		1530	Aqu	G	4										8240 TCL
6	MW13		1530	Aqu	G		2									8270 TCL
7	W		1610	Aqu	C	4										8240 TCL
8	W		1610	Aqu	C		2									8270 TCL
9	W		1610	Aqu	C			1*								Total RCRA metals
10																

#11 MW11
#12 MW12
#13 MW13
#14 W

TRANSFER NUMBER	ITEM NUMBER	TRANSFERS RELINQUISHED BY	TRANSFERS ACCEPTED BY	DATE	TIME
1	1-9	Byron Braswell	Grady Lane	6/12/92	1730 ~~1750~~ ~~AM~~
2	1-9	Grady Lane	Patty Pyce	6-12-92	1730
3					
4					

REMARKS
* LAB PRESERVED

Jim Lennon
SAMPLER'S SIGNATURE

AnalytiKEM An American NuKEM Company 8235T 00826

Chain-of-Custody Record

Program Area: Drinking Water Wastewater Groundwater Solid and Hazardous Waste

Client: ENSC. **Sample Collector:** LENNON

Project: TFI LENOIR **AnalytiKEM Contact:** Greg

Laboratory	Sales Office
2324 Vernsdale Road Rock Hill, South Carolina 29731 (803) 324-5310 Fax: (803) 324-8378	454 South Anderson Road BTC 532 Rock Hill, South Carolina 29730 (803) 329-9690 Fax: (803) 329-9689

ITEM NUMBER	SAMPLE DESIGNATION	DATE	TIME	MATRIX	Grab or Composite	40 ml vials	950 ml Org. Pres.	Liter ml Unpres.	ml HNO_3	ml H_2SO_4	ml NaOH	ml HCL	500 ml unpres.	1 liter unpres.	PARAMETERS
15	DC	6/11	1200	Soil Solid	C			1							8240 TCL
15	DC	6/11	1200	Soil Solid	C							1			8270 TCL
15	DC	6/11	1200	Soil Solid	C								1		& Total RCRA metals
4															
5															
6															
7															
8															
9															
10															

15

TRANSFER NUMBER	ITEM NUMBER	TRANSFERS RELINQUISHED BY	TRANSFERS ACCEPTED BY	DATE	TIME
1	1-3	Brian Brazwell	Grady Lane	6/12/92	1330
2	1-3	Grady Lane	Bobby Roper	6-12 92	1730
3					
4					

REMARKS

SAMPLER'S SIGNATURE

Reorder: PJ Associates 803-329-2300 White Laboratory Copy Yellow Client Copy AKEM #1 12/89

AnalytiKEM *An American NuKEM Company*

AnalytiKEM Inc.
454 S. Anderson Road, BTC 532
Rock Hill, SC 29730
803/329-9690

TEST REPORT NO. A82351, Supplemental

August 27, 1992

Prepared for:

ENSCI
1108 Thomasville Road
High Point, NC 27260

Attention: Bruce Braswell

Project: TFI - Lenoir

Reviewed &
Approved by: _____

Name: Carmine M. Fioriglio

Title: QA/QC Manager

AnalytiKEM

TABLE OF CONTENTS

		Page
I.	Certification	1
II.	Definition of Terms	2
III.	Sample Designations	3
IV.	Methodology	4
V.	Analytical Results	5 - 9

AnalytiKEM

I. Certification

AnalytiKEM, Inc.
Current Certifications/Regulatory Approvals

Tabulated below are the current laboratory certifications that are held by each AnalytiKEM Laboratory. Analyses performed at multiple AnalytiKEM locations will be noted in the test report.

Cherry Hill, NJ		Rock Hill, SC		Houston Analytical, TX	
State	Cert #	State	Cert #	State	Cert #
Arkansas	*	S. Carolina	46067	N. Dakota	R-006
Connecticut	PH-0715	N. Carolina	316	Oklahoma	8403
Florida	880985G	New Jersey	79795	Texas Water Commission *	
Massachusetts	NJ117			Louisiana	92-07
New Jersey	04012			S. Carolina	82011
New York	10815			N. Carolina	367
N. Carolina	258			Wisconsin	998010530
N. Dakota	R-038			New Jersey	82869
Pennsylvania	68366				
S. Carolina	94004				
Tennessee	02908				
Vermont	*				
Oklahoma	9107				

* No certification numbers are issued for these states.

AnalytiKEM

II. Definition of Terms

Term	Definition
D	Detected; result must be greater than zero.
DI	Deionized Water
J	Compound was detected at levels below the practical quantitation limit. The level reported is approximate.
MS/MSD	Matrix Spike/Matrix Spike Duplicate.
NA	Analysis not applicable to the sample matrix.
ND	Not Detected
NR	Not Requested
NTU	Nephelometric Turbidity Units
RPD	Relative Percent Difference
RSD	Relative Standard Deviation
U	Compound was analyzed for but not detected. The preceding number is the practical quantitation limit for the compound.
ppb	Parts-per-billion; may be converted to ppm by dividing by 1,000.
ppm	Parts-per-million; may be converted to ppb by multiplying by 1,000.
ug/l	Micrograms of constituent per liter of sample; equivalent to parts-per-billion.
ug/kg	Micrograms of constituent per kilogram of sample; equivalent to parts-per-billion.
ug/kg dw	Micrograms of constituent per kilogram of sample reported on a dry weight basis.
CCC	Calibration Check Compound; used to verify the precision of a GC/MS calibration curve.
SPCC	System Performance Check Compound; used to verify the correct operation of a GC/MS instrument.
PQL	Practical Quantitation Limit; the minimum level at which compounds can be dependably quantitated.
B	Analyte detected in associated blank as well as the sample. It indicates possible/probable blank contamination.

AnalytiKEM

III. Sample Designations

AnalytiKEM Designation	Client Designation	Matrix	Date Sampled
A82351-4	MW4	Aqueous	6/11/92
A82351-5	MW5	Aqueous	6/11/92
A82351-6	MW6	Aqueous	6/11/92

Note: Samples will be held for 30 days beyond the test report date unless otherwise requested.

AnalytiKEM

IV. Methodology

Volatiles

Method 5030, Purge and Trap, Test Methods for Evaluating Solid Waste, Physical/Chemical Methods, SW846, Third Edition, USEPA, 1986, with all promulgated revisions.

Method 8240, Gas Chromatography/Mass Spectrometry for Volatile Organics, Test Methods for Evaluating Solid Waste, Physical/Chemical Methods, SW846, Third Edition, USEPA, 1986, with all promulgated revisions.

Semivolatiles

Method 3510, Separatory Funnel Liquid-Liquid Extraction, Test Methods for Evaluating Solid Waste, Physical Chemical Methods, SW846, Third Edition, USEPA, 1986, with all promulgated revisions.

Method 8270, Gas Chromatography/Mass Spectrometry for Semivolatile Organics: Capillary Column Technique, Test Methods for Evaluating Solid Waste, Physical/Chemical Methods, SW846, Third Edition, USEPA, 1986, with all promulgated revisions.

AnalytiKEM

V. Analytical Results

EPA/NIH/NBS Nontargetted Library Search

No nontargetted compounds were detected in the following samples:

Semivolatile Method Blank

AnalytiKEM Designation Volatile Method Blank

CAS Number	Compound Name	Fraction	Scan Number	Estimated Concentration (ug/l)
76-13-1	1,1,2-Trichloro-1,2,2-trifluoroethane	VOA	438	6.4

AnalytiKEM Designation A82351-4

Client Designation MW4

CAS Number	Compound Name	Fraction	Scan Number	Estimated Concentration (ug/l)
76-13-1	1,1,2-Trichloro-1,2,2-trifluoroethane	VOA	435	13
	Unknown Compound	VOA	502	20
	Unknown Compound	VOA	754	8.4
	Unknown Compound	VOA	828	5.1
	Cyclo Alkane	VOA	862	29
	Cyclo Alkane	VOA	887	13
	Cyclo Alkane	VOA	916	6.2
	Unknown Compound	BNA	235	38
	Unknown Compound	BNA	245	13
	Unknown Compound	BNA	250	19
	Unknown Compound	BNA	257	28
	Unknown Compound	BNA	265	25
	Unknown Compound	BNA	294	24
	Unknown Compound	BNA	298	26
	Dimethyl Benzene Isomer	BNA	316	2,600 *

Note: Estimated concentration is calculated against the nearest eluting internal standard.

* Result obtained from rerun due to saturation in original run.

AnalytiKEM

V. Analytical Results (Cont'd)

EPA/NIH/NBS Nontargetted Library Search

AnalytiKEM Designation A82351-4 (Cont'd)

Client Designation MW4

CAS Number	Compound Name	Fraction	Scan Number	Estimated Concentration (ug/l)
	Unknown Compound	BNA	363	10
	Unknown Aromatic	BNA	463	27
	Unknown Aromatic	BNA	472	23
	Unknown Compound	BNA	492	73
	Unknown Aromatic	BNA	506	62
	Unknown Aromatic	BNA	546	33
	Unknown Aromatic	BNA	617	21
	Unknown Aromatic	BNA	671	28
	Unknown Compound	BNA	710	20
	Unknown Compound	BNA	715	26
	Unknown Compound	BNA	731	23
	Unknown Compound	BNA	799	61
	Unknown Compound	BNA	829	39
	Unknown Compound	BNA	868	59
	Unknown Compound	BNA	915	21
	Unknown Compound	BNA	950	38
	Unknown Compound	BNA	1193	57

Note: Estimated concentration is calculated against the nearest eluting internal standard.

AnalytiKEM

V. Analytical Results (Cont'd)

EPA/NIH/NBS Nontargetted Library Search

AnalytiKEM Designation A82351-5

Client Designation MW5

CAS Number	Compound Name	Fraction	Scan Number	Estimated Concentration (ug/l)
76-13-01	1,1,2-Trichloro-1,2,2-trifluoroethane	VOA	435	14
	Unknown Compound	VOA	503	6.9
	Cyclo Alkane	VOA	755	8.6
	Cyclo Alkane	VOA	863	17
	Cyclo Alkane	VOA	890	8.2

Note: Estimated concentration is calculated against the nearest eluting internal standard.

AnalytiKEM

V. Analytical Results (Cont'd)

EPA/NIH/NBS Nontargetted Library Search

AnalytiKEM Designation A82351-5 (Cont'd)

Client Designation MW5

CAS Number	Compound Name	Fraction	Scan Number	Estimated Concentration (ug/l)
	Unknown Compound	BNA	235	25
	Unknown Compound	BNA	250	22
	Unknown Compound	BNA	299	21
	Unknown Compound	BNA	316	780 *
	Unknown Aromatic	BNA	464	39
	Unknown Aromatic	BNA	472	54
	Unknown Aromatic	BNA	507	110
	Unknown Aromatic	BNA	547	61
	Unknown Aromatic	BNA	589	18
	Unknown Aromatic	BNA	626	15
	Unknown Compound	BNA	653	19
	Unknown Compound	BNA	663	36
	Unknown Aromatic	BNA	673	32
	Unknown Aromatic	BNA	716	30
	Unknown Compound	BNA	723	21
	Unknown Compound	BNA	732	17
	Unknown Compound	BNA	797	30
	Unknown Compound	BNA	802	37
	Unknown Compound	BNA	810	15
	Unknown Compound	BNA	915	48
	Unknown Compound	BNA	947	46
	Dimethyl Naphthalene Isomer	BNA	1017	29
	Unknown Compound	BNA	1151	90
	Unknown Compound	BNA	1448	69
	Unknown Compound	BNA	1830	11

Note: Estimated concentration is calculated against the nearest eluting internal standard.

* Result obtained from rerun due to saturation in original run.

AnalytiKEM

V. Analytical Results (Cont'd)

EPA/NIH/NBS Nontargetted Library Search

AnalytiKEM Designation A82351-6

Client Designation MW6

CAS Number	Compound Name	Fraction	Scan Number	Estimated Concentration (ug/l)
76-13-1	1,1,1-Trichloro-1,2,2-trifluoroethane	VOA	437	15
	Unknown Compound	BNA	565	16
	Unknown Compound	BNA	571	46

Note: Estimated concentration is calculated against the nearest eluting internal standard.

AnalytiKEM *An American NuKEM Company*

AnalytiKEM Inc.
2324 Vernesdale Road
Rock Hill, SC 29731
803/324-5310

TEST REPORT NO. A82351
Supplemental

AUGUST 6, 1992

Prepared for:

ENSCI
1108 Thomasville Road
High Point, NC 27260

Attention: Bruce Braswell

Project: TFI- Lenoir

Date of Sample Receipt: June 12, 1992

Reviewed &
Approved by: Patricia de Andino

Name: Patricia de Andino

Title: Laboratory Manager

TABLE OF CONTENTS

		Page
I.	Certification	1
II.	Definition of Terms	2
III.	Sample Designations	3
IV.	Methodology	4
V.	Analytical Results	5-12

I. Certification

State	Certification #
New Jersey	79795
North Carolina	316
South Carolina	46067

II. Definition of Terms

Term	Definition
D	Detected; result must be greater than zero.
DI	Deionized Water
J	Compound was detected at levels below the practical quantitation limit. The level reported is approximate.
MS/MSD	Matrix Spike/Matrix Spike Duplicate.
NA	Analysis not applicable to the sample matrix.
ND	Not Detected
NR	Not Requested
NTU	Nephelometric Turbidity Units
RPD	Relative Percent Difference
RSD	Relative Standard Deviation
TON	Threshold Odor Number
U	Compound was analyzed for but not detected. The preceding number is the practical quantitation limit for the compound.
ppb	Parts-per-billion; may be converted to ppm by dividing by 1,000.
ppm	Parts-per-million; may be converted to ppb by multiplying by 1,000.
ug/l	Micrograms of constituent per liter of sample; equivalent to parts-per-billion.
ug/kg	Micrograms of constituent per kilogram of sample; equivalent to parts-per-billion.
ug/kg dw	Micrograms of constituent per kilogram of sample reported on a dry weight basis.
CCC	Calibration Check Compound; used to verify the precision of a GC/MS calibration curve.
SPCC	System Performance Check Compound; used to verify the correct operation of a GC/MS instrument.
PQL	Practical Quantitation Limit; the minimum level at which compounds can be dependably quantitated.
B	Analyte detected in associated blank, as well as the sample. It indicates possible/probable blank contamination.

III. Sample Designations

AnalytiKEM Designation	Client Designation	Matrix	Date
1	MW1	Aqueous	6/11/92
2	MW2	Aqueous	6/11/92
3	MW3	Aqueous	6/11/92
4	MW4	Aqueous	6/11/92
5	MW5	Aqueous	6/11/92
6	MW6	Aqueous	6/11/92
7	MW7	Aqueous	6/11/92
8	MW8	Aqueous	6/11/92
9	MW9	Aqueous	6/11/92
10	MW10	Aqueous	6/11/92
11	MW11	Aqueous	6/11/92
12	MW12	Aqueous	6/11/92
13	MW13	Aqueous	6/11/92
14	W	Aqueous	6/11/92
15	DC	Soil	6/11/92

Note: Samples will be held for 30 days beyond the test report date unless otherwise requested.

IV. Methodology

All analysis are performed in accordance with methodologies found in the following publications:

- Federal Register, Vol. 49, No. 209, October 26, 1984.
- Federal Register, Vol. 51, No. 114, June 13, 1986.
- Test Methods for Evaluating Solid Waste, USEPA, SW-846, Second Edition, July 1982.
- Methods for Chemical Analysis of Water and Wastes, EPA-600/4-79-020, USEPA, March 1983.

IX. Analytical Results (Cont'd)

EPA/NBS/NIH Nontargetted Library Search

No nontargetted compounds were detected in the following samples:

Aqueous Method Blank 1
Aqueous Method Blank 2
A82351-9 MW9
A82351-10 MW10

AnalytiKEM Designation: Aqueous Method Blank 3

CAS Number	Compound Name	Fraction	Scan Number	Estimated Concentration ug/l
541731	1,3-Dichlorobenzene	VOA		1.3
106467	Unknown Hydrocarbon	VOA		1.4
95501	Hexanedioic Acid Isomer	VOA		1.2

AnalytiKEM Designation: Aqueous Method Blank 4

CAS Number	Compound Name	Fraction	Scan Number	Estimated Concentration ug/l
76-13-01	1,1,2-Trichloro-1,2,2-trifluoroethane	VOA	438	6.4

AnalytiKEM Designation: 82351-1

Client Designation: MW1

CAS Number	Compound Name	Fraction	Scan Number	Estimated Concentration ug/l
	None Detected	VOA		
	Unknown Hydrocarbon	BNA	646	8.0
	Hexanedioic Acid Isomer	BNA	2806	12

IX. Analytical Results (Cont'd)

EPA/NBS/NIH Nontargetted Library Search

AnalytiKEM Designation: 82351-2

Client Designation: MW2

CAS Number	Compound Name	Fraction	Scan Number	Estimated Concentration ug/l
	Unknown Cycloalkane	VOA	603	16
	Unknown Cycloalkane	VOA	786	10
	Alkylated Aromatic	BNA	618	20
	Decahydronaphthalene Isomer	BNA	686	16
	Unknown	BNA	708	12
5441510	Cyclohexanone, 4-ethyl	BNA	734	16
	Alkylated Aromatic	BNA	754	28
	Alkylated Aromatic	BNA	836	8
	Alkylated Aromatic	BNA	845	24
	Unknown Indene Derivative	BNA	907	8
	Alkylated Aromatic	BNA	913	12
	Unknown	BNA	931	16
	Dihydrodimethylindene isomer	BNA	992	12
	Unknown	BNA	1087	12
	Unknown	BNA	1110	8
	Unknown	BNA	1144	12
	Unknown	BNA	1743	8
	Unknown	BNA	2344	16
	Hexanedioic Acid Isomer	BNA	2807	28

AnalytiKEM Designation: 82351-3

Client Designation: MW3

CAS Number	Compound Name	Fraction	Scan Number	Estimated Concentration ug/l
	Unknown Cycloalkane	VOA	603	14
	Unknown Cycloalkane	VOA	645	5
	Unknown	BNA	650	12
	Hexanedioic Acod Isomer	BNA	2814	12

IX. Analytical Results (Cont'd)

EPA/NBS/NIH Nontargetted Library Search

AnalytiKEM Designation: 82351-4

Client Designation: MW4

CAS Number	Compound Name	Fraction	Scan Number	Estimated Concentration ug/l
	1,1,2-Trichloro-1,2,2-trifluoroethane	VOA	435	13
	Unknown	VOA	502	20
	Unknown Cycloalkane	VOA	754	8.4
	Unknown	VOA	828	5.1
	Unknown Cycloalkane	VOA	862	29
	Unknown Cycloalkane	VOA	887	13
	Unknown Cycloalkane	VOA	916	6.2
	Unknown	BNA	363	10
	Unknown	BNA	235	38
	Unknown	BNA	245	13
	Unknown	BNA	250	19
	Unknown	BNA	257	28
	Unknown	BNA	265	25
	Unknown	BNA	294	24
	Unknown	BNA	298	26
	Unknown Aromatic	BNA	463	27
	Unknown Aromatic	BNA	472	23
	Unknown	BNA	492	73
	Unknown Aromatic	BNA	506	62
	Unknown Aromatic	BNA	546	33
	Unknown Aromatic	BNA	617	21
	Unknown Aromatic	BNA	671	28
	Unknown	BNA	710	20
	Unknown	BNA	715	26
	Unknown	BNA	731	23
	Unknown	BNA	799	61
	Unknown	BNA	829	39
	Unknown	BNA	868	59
	Unknown	BNA	915	21
	Unknown	BNA	950	38
	Unknown	BNA	1193	57
	Dimethyl Benzene Isomer	BNA	316	2600

IX. Analytical Results (Cont'd)

EPA/NBS/NIH Nontargetted Library Search

AnalytiKEM Designation: 82351-5

Client Designation: MW5

CAS Number	Compound Name	Fraction	Scan Number	Estimated Concentration ug/l
76-13-01	1,1,2-Trichloro-1,2,2-trifluoroethane	VOA	435	14
	Unknown	VOA	503	6.9
	Unknown Cycloalkane	VOA	755	8.6
	Unknown Cycloalkane	VOA	863	17
	Unknown Cycloalkane	VOA	890	8.2
	Unknown	BNA	1830	11
	Unknown	BNA	235	25
	Unknown	BNA	250	22
	Unknown	BNA	299	21
	Unknown Aromatic	BNA	464	39
	Unknown Aromatic	BNA	472	54
	Unknown Aromatic	BNA	507	110
	Unknown Aromatic	BNA	547	61
	Unknown Aromatic	BNA	589	18
	Unknown Aromatic	BNA	626	15
	Unknown	BNA	653	19
	Unknown	BNA	663	36
	Unknown Aromatic	BNA	673	32
	Unknown Aromatic	BNA	716	30
	Unknown	BNA	723	21
	Unknown	BNA	732	17
	Unknown	BNA	797	30
	Unknown	BNA	802	37
	Unknown	BNA	810	15
	Unknown	BNA	915	48
	Unknown	BNA	947	46
	Dimethyl Naphthalene Isomer	BNA	1017	29
	Unknown	BNA	1151	60
	Unknown	BNA	1448	69
	Dimethyl Benzene Isomer	BNA	316	780

IX. Analytical Results (Cont'd)

EPA/NBS/NIH Nontargetted Library Search

AnalytiKEM Designation: 82351-6

Client Designation: MW6

CAS Number	Compound Name	Fraction	Scan Number	Estimated Concentration ug/l
76-13-01	1,1,2-Trichloro-1,2,2-trifluoroethane	VOA	437	15
	Unknown	BNA	565	16
	Unknown	BNA	571	46

AnalytiKEM Designation: 82351-7

Client Designation: MW7

CAS Number	Compound Name	Fraction	Scan Number	Estimated Concentration ug/l
	None Detected	VOA		
	Unknown	BNA	382	8
	Unknown	BNA	387	20
	Unknown	BNA	884	28
	Unknown	BNA	931	16
	Hexanedioic Acid Ester Isomer	BNA	2847	12

AnalytiKEM Designation: 82351-8

Client Designation: MW8

CAS Number	Compound Name	Fraction	Scan Number	Estimated Concentration ug/l
	None Detected	VOA		
	Unknown	BNA	649	8
	Unknown	BNA	1606	8
	Hexanedioic Acid Ester Isomer	BNA	2815	20

IX. Analytical Results (Cont'd)

EPA/NBS/NIH Nontargetted Library Search

AnalytiKEM Designation: 82351-11

Client Designation: MW11

CAS Number	Compound Name	Fraction	Scan Number	Estimated Concentration ug/l
	None Detected	VOA		
	Hexanedioic Acid Ester Isomer	BNA	2870	8

AnalytiKEM Designation: 82351-12

Client Designation: MW12

CAS Number	Compound Name	Fraction	Scan Number	Estimated Concentration ug/l
108203	Diisopropyl Ether	VOA	507	6
	Unknown	BNA	909	8
	Hexanedioic Acid Ester Isomer	BNA	2869	12

AnalytiKEM Designation: 82351-13

Client Designation: MW13

CAS Number	Compound Name	Fraction	Scan Number	Estimated Concentration ug/l
	Unknown	VOA	233	41
	Unknown	BNA	548	12
	Unknown	BNA	695	200
	Unknown	BNA	1044	28
	Unknown	BNA	1407	12
	Hydroxy Methoxy Benzaldehyde Isomer	BNA	1456	12
	Unknown	BNA	1654	24
	Unknown Alkane Derivative	BNA	2636	16
	Unknown Alkane Derivative	BNA	2756	28
	Hexanedioic Acid Ester Isomer	BNA	2874	150
	Unknown	BNA	2962	16
	Unknown Alkane	BNA	2982	24
	Unknown Alkane	BNA	3089	12

IX. Analytical Results (Cont'd)

EPA/NBS/NIH Nontargetted Library Search

AnalytiKEM Designation: 82351-14

Client Designation: W

CAS Number	Compound Name	Fraction	Scan Number	Estimated Concentration ug/l
	None Detected	VOA		
	Unknown	BNA	2339	28
	Unknown	BNA	2528	20
	Unknown	BNA	2541	24
	Unknown Alkane	BNA	2610	12
	Hexanedioic Acid Ester Isomer	BNA	2848	24

AnalytiKEM Designation: Non-Aqueous Blank

CAS Number	Compound Name	Fraction	Scan Number	Estimated Concentration ug/kg
	None Detected	VOA		
	Unknown	BNA	385	770
	Unknown	BNA	477	550
	Unknown	BNA	622	550
	Unknown	BNA	668	330
	Bis Dimethyl Ethyl Phenol Isomer	BNA	1628	110
	Hexanedioic Acid Ester Isomer	BNA	2849	660

IX. Analytical Results (Cont'd)

EPA/NBS/NIH Nontargetted Library Search

AnalytiKEM Designation: 82351-15

Client Designation: DC

CAS Number	Compound Name	Fraction	Scan Number	Estimated Concentration ug/kg
	None Detected	VOA		
	Unknown	BNA	380	550
	Unknown	BNA	474	330
	Unknown	BNA	619	440
	Unknown	BNA	665	220
	Bis Dimethylethyl Phenol Isomer	BNA	1623	110
	Hexanedioic Acid Ester Isomer	BNA	2841	550