522SERBSF10,631

522SERBSF10,631

Site Name (Subject):	TEXFI INDUSTRIES, INC/NEW BERN
Site ID (Document ID):	NCD981928088
Document Name (DocType):	Correspondence (C)
Report Segment:	
Description:	Remedial Action Plan
Date of Document:	10/11/1989
Date Received:	
Box: *Enter SF and # with no spaces*	SF10,631
Access Level:	PUBLIC
Division:	WASTE MANAGEMENT
Section:	SUPERFUND
Program (Document Group):	SERB (SERB)
Document Category:	FACILITY

Print Report for Record | Go to New Blank Record | Go to New Record - (default to last record values) | Delete Record

TEXFI INDUSTRIES
REMEDIAL ACTION PLAN
NEW BERN, NORTH CAROLINA

3136-011-1000 OCTOBER 11, 1989

CERCLA

3136-011-3000

TABLE OF CONTENTS

SECTION	DESCRIPTION	PAGE
1	BACKGROUND	2
2	INTRODUCTION	3
3	TREATMENT OBJECTIVES	6
4	HYDROGEOLOGICAL CHARACTERISTICS	10
5	SITE MONITORING AND EVALUATION OF THE REMEDIAL ACTION SYSTEM	11

APPENDIX	
A	STATE GUIDELINES WITH REPORT REFERENCES
B	RESULTS OF LABORATORY ANALYSES
C	CALCULATIONS

LIST OF FIGURES

(FIGURES IN POCKET AT END OF REPORT)

NO.	TITLE
3136-11-1000-D1	SITE PLAN
3136-11-1000-I1	GROUNDWATER TREATMENTS SYSTEM PIPING AND INSTRUMENTATION DIAGRAM SHEET 1 OF 2
3136-11-1000-I2	GROUNDWATER TREATMENTS SYSTEM PIPING AND INSTRUMENTATION DIAGRAM SHEET 2 OF 2

1. BACKGROUND

Amital Spinning Corporation contracted with Law Engineering Company (LETCo) in August 1986 to perform an environmental audit and preliminary groundwater assessment at the former Texfi plant in New Bern, North Carolina. As a result of this assessment, groundwater contamination was identified.

Charles T. Main (MAIN) was contracted to provide additional horizontal contaminant delineation in the upper aquifer, conduct initial contaminant screening in the Castle Hayne limestone aquifer, and quantify basic hydrological parameters in an attempt to identify possible pathways of migration in which contaminated groundwater might travel. Geologic cross-sections were generated from drilling logs and soil samples obtained during drilling. The results of this study were reported in the Preliminary Groundwater Assessment.

The Phase II Groundwater Assessment conducted by MAIN provided additional hydrogeologic information further defining the nature of the contaminant migration within the aquifers. More detailed potentiometric data generated during this study supported the idea of multiple contaminant source locations.

MAIN's Phase III Groundwater Assessment entailed the installation of additional monitoring wells and extensive sampling and analysis for volatile organic compounds (VOC's). The two new wells and eight existing wells were sampled and tested for VOC's in accordance with EPA Method 624.

2. INTRODUCTION

The North Carolina Division of Environmental Management has requested the submission of a Remedial Action Plan (RAP) for the remediation of groundwater contamination existing at the property owned by Texfi Industries located in New Bern, North Carolina. This report comprises the Remedial Action Plan.

The state of North Carolina requires that a Remedial Action Plan provide certain information necessary to the remediation of groundwater contamination. Significant efforts have been made to identify the groundwater contamination and the extent of the problem. The results of these efforts have been have been detailed in the following reports:

Law Engineering Preliminary Assessment
Preliminary Groundwater Assessment
Groundwater Assessment - Phase II
Groundwater Assessment - Phase III

The information contained in the above-mentioned reports along with information contained herein collectively fulfills the requirements of a Remedial Action Plan. Appendix A consists of a verbatim copy of North Carolina's Outline for Evaluation of Site Characterization Data and Remedial Action Plans for Groundwater Restoration. The components of the above investigative reports which satisfy each element of the Outline have been referenced and incorporated into the outline found in Appendix A.

Additional analyses have also been performed and the results of these analyses are also presented in this report. Finally, this

report recommends a strategy and treatment goals toward the removal of contamination from the groundwater.

The RAP consists of the following concept. A series of eleven recovery wells are planned to collect contaminated groundwater (see Drawing 3136-011-1000-D1). Ten of the recovery wells will be shallow wells. The eleventh well will be a deep recovery well.

The ten shallow wells will be screened in the Post-Miocene sands and clays. One of the shallow wells will be located adjacent to wells MW-4A and MW-6. Seven of the shallow wells will be located in a belt perpendicular to the downgradient flow and approximately 100 feet from the eastern side of the manufacturing building. The wells in the belt will be spaced approximately 125 feet from one another. The remaining two wells will be situated midway between the manufacturing building and well MW-4.

One deep recovery well will be installed in the Castle Hayne Formation and will be located in the vicinity of wells MW-9 and MW-9A. This well will recover contaminated groundwater in the lower aquifer. It is anticipated that the pumping rate for the deep well will be approximately 50 gpm. Individual pumping rates for the shallow wells will range from 0.25 to 1.0 gpm.

Contaminated groundwater will be pumped from the wells to a groundwater treatment facility for removal of volatile organic compounds (VOC's) and possibly nickel and zinc. An air stripper will be utilized to remove the VOC's. See Drawings 3136-011-1000 I1 and I2 for the proposed treatment schematic.

The background levels for nickel and zinc near the Texfi facility are currently under investigation. The NPDES permit may require the levels of nickel and zinc be reduced before treated groundwater may be discharged. If it is determined that the levels of nickel and zinc in the groundwater are elevated, physical/chemical treatment for the reduction of nickel and zinc may be included in the treatment process.

The treated groundwater will be discharged directly to a swale located adjacent to the plant building. Twenty-four hour operation of the recovery/discharge system is expected.

The treatment process will be operated until the treatment goals have been attained. Attainment of the treatment goals will be verified by the analysis of a minimum of two additional samplings. Upon confirmation that the treatment goals have been met, the treatment process will be discontinued.

3. TREATMENT OBJECTIVES

The presence of contaminants which might pose a health risk in the groundwater necessitates that the groundwater be treated for the reduction of these substances. Certain volatile organic compounds (VOC's) are present in the groundwater which have been associated with cancer risk. A toxicity test done early in the project indicates chronic toxicity. The cause of the toxicity is unknown at this time. The possibility of it being caused by elevated nickel and zinc levels is currently being investigated; therefore, the remediation action system will include reduction of VOC's and possibly nickel and zinc.

Volatile Organic Compounds (VOC's)

An analysis of the contaminated groundwater by EPA Method 624 determined the presence of thirteen (13) volatile organic compounds (VOC's) in detectable quantities. Treatment goals were developed for the VOC's based on North Carolina Division of Environmental Management guidelines such that the concentration of any one VOC will not exceed a cancer risk of 1:100,000. Of the thirteen VOC's present in the groundwater in detectable quantities, it is recommended that the following five VOC's be monitored and treated to the indicated levels:

Vinyl chloride	0.15 µg/L
Methylene chloride	47.00 µg/L
1,1 - Dichloroethylene	2.80 µg/L
1,2 - Dichloroethane	3.80 µg/L
Trichloroethylene	32.00 µg/L

The eight VOC's not included in the above list were eliminated because they met one of the following criteria:

- Non-carcinogenic
- Cancer risk dosage a minimum of ten (10) times greater than the calculated weighted average concentration of the groundwater before treatment

Appendix C provides backup calculations for the determination of the treatment goals.

Nickel and Zinc

Composite groundwater samples were found to have 237.0 µg/L nickel and 396.5 µg/L zinc. Levels in individual wells vary from 30.5 µg/L to 1185.0 µg/L for nickel and from less than 5.0 µg/L to 2585.0 µg/L for zinc. These results are given in Appendix B and are from a single sampling event. Nickel and zinc may require treatment in order to meet groundwater quality and/or surface water quality (NPDES) criteria. The NPDES permit has not been issued but may include nickel, zinc, and toxicity limits. Groundwater nickel and zinc limits are a function of background levels. The Groundwater Section of the Division of Environmental Management requires that the concentration of these metals in the groundwater be less than 150 percent of the background concentrations for the region.

Groundwater treatment goals for nickel and zinc would need to be derived by first establishing the background concentrations for these metals. Sampling to determine these background levels is in progress. The background levels will be established by

taking two deep and two shallow aquifer samples from upgradient wells adjacent to the Texfi property, plus two shallow aquifer samples from upgradient wells on the Texfi property. Once the NPDES permit is issued and the background for nickel and zinc has been set, it can be determined whether nickel and zinc treatment is necessary.

If it is required, treatment for the reduction of nickel and zinc is expected to be accomplished by physical/chemical treatment. This treatment would principally utilize precipitation to remove the metals. The solids from the precipitation process would be disposed of in an appropriate manner. Treatability and toxicity testing would be performed to verify the effectiveness of the treatment.

The treatment goals would be to reduce the nickel and zinc concentrations to less than 150 percent of the established background levels of nickel and zinc in the groundwater.

Treatment Design

Preliminary design work calls for physical/chemical treatment for the reduction of nickel and zinc followed by air stripping for the removal of VOC's. Several outstanding issues remain unresolved that may necessitate altering the final design of the treatment plant. The decision on the nickel and zinc issue will impact the final design of the treatment plant. The NPDES permit for the discharge of treated groundwater is under review. The Water Quality Section of the Division of Environmental Management will issue a list of revisions to the permit which may include treatment for the reduction of nickel and zinc, and toxicity limits. The permit is currently under review. The

final NPDES permit requirements may necessitate further alterations to the treatment design.

4. HYDROGEOLOGICAL CHARACTERISTICS

Aquifer Characteristics

Aquifer characteristics, as reported in all phases of the groundwater assessment, were developed from existing published data, actual pump test data and slug test data acquired in the field. A pump test was conducted on the existing process water well located on the south side of the plant building. Wells W-13 and W-14 were used as piezometers during a 48 hour pump test. The results of the test indicated that a sustained flow rate of 50 gpm could be pumped from the recovery well in the Castle-Hayne aquifer. Slug tests were performed on wells 3A, 4A, 6, 7, 8 and 9. The data indicated low hydraulic conductivity for the water table aquifer consisting of Coastal Plain sediments. The flow rate of each recovery well in the upper aquifer is anticipated to be less than one gallon per minute.

Plume Delineation

An attempt was made to further approximate the depth of the contaminant plume by sampling one of the deep wells in the vicinity of MW-9. Well W-14 has been drilled to a depth of 90 feet and double-cased to prevent introduction of contaminants from the upper aquifer to a lower level. Samples were obtained from two deep wells, Well W-14 and the process water well. Analysis of the samples indicated that there is no VOC contamination of the deep aquifer (see Appendix B).

5. SITE MONITORING AND EVALUATION OF THE REMEDIAL ACTION SYSTEM

The proposed monitoring regimen in the first year would begin with monthly measurements of the well water elevations in order to establish the zones of depression. Quarterly sampling and analysis of pre-treatment and post-treatment water samples would also be performed. After the first year, monitoring would consist of sampling and analysis of pre-treatment and post-treatment water samples collected twice a year. The results of all analyses would be reported to the State quarterly the first year and twice a year in subsequent years.

The treatment process will be operated until the treatment goals have been attained. Attainment of the treatment goals will be verified by the analysis of a minimum of two additional samplings. Upon confirmation that the treatment goals have been met and with consent from the State, the treatment process will be discontinued.

APPENDIX A

State Guidelines with Report References

The North Carolina Division of Environmental Management has requested the submission of a Remedial Action Plan (RAP) for the remediation of groundwater contamination existing at the property owned by Texfi Industries located in New Bern, North Carolina.

The state of North Carolina requires that a Remedial Action Plan provide certain information necessary to the remediation of groundwater contamination. Numerous investigations of the Texfi site have been conducted. Each investigation has been accompanied by a report. The information contained in these reports collectively fulfills the requirements of a Remedial Action Plan. These reports, in chronological order, are:

Law Engineering Preliminary Assessment
Preliminary Groundwater Assessment
Groundwater Assessment - Phase II
Groundwater Assessment - Phase III
Remedial Action Plan

Appendix A consists of a verbatim copy of North Carolina's Outline for Evaluation of Site Characterization Data and Remedial Action Plans for Groundwater Restoration. The components of the above-mentioned investigative reports which satisfy each element of the Outline have been referenced and incorporated into the outline that follows.

NORTH CAROLINA DIVISION OF ENVIRONMENTAL MANAGEMENT
OUTLINE FOR EVALUATION OF SITE CHARACTERIZATION DATA
AND REMEDIAL ACTION PLANS FOR GROUNDWATER RESTORATION

1. *Introduction - including a statement of objectives and a definition of scope of the investigation.*

   Remedial Action Plan
   2. Introduction

2. *General Locus Map (eg: segment of 7½ min. topographic map where available; otherwise, segment of county highway map) showing location of contamination site.*

   Preliminary Groundwater Assessment
   2. Background
      Figure 1.

3. *Discussion of Regional Hydrogeology*

   (a) *Delineation of the occurrence of geological units or formations including lithologic character and structural features (from published literature, files and personal knowledge.)*

   Preliminary Groundwater Assessment
   3. Hydrogeology
      A. Regional Hydrogeology
      B. Site Hydrogeology
   Groundwater Assessment - Phase II
   2. Hydrogeology
      A. Site Geology
   Groundwater Assessment - Phase III
   2. Hydrogeology
      A. Site Geology

   (b) *Reference to all relevant geological features such as faulting, fracturing, dip of bedding planes, etc.*

   Preliminary Groundwater Assessment
   3. Hydrogeology
      A. Regional Hydrogeology
      B. Site Hydrogeology
   Groundwater Assessment - Phase II
   2. Hydrogeology
      A. Site Geology
   Groundwater Assessment - Phase III
   2. Hydrogeology
      A. Site Geology

(c) *Information pertaining to local groundwater usage including type of use (public, industrial private domestic, irrigation, etc.) and identification of aquifer.*

Preliminary Groundwater Assessment
3. Hydrogeology
A. Regional Hydrogeology - Table 3

(d) *Identification of all water supply wells within 1500 feet of the source of contamination including location and construction details, if available.*

Preliminary Groundwater Assessment
3. Hydrogeology
A. Regional Hydrogeology - Table 3

4. *Base Map(s)* upon which the following information is exhibited:*

(a) *Location of source(s) of contamination,*

Preliminary Groundwater Assessment
Drawing 3136-008-1000 R1

(b) *Locations of all sampling points, logged borings, and observation/monitoring wells,*

Groundwater Assessment - Phase III
Drawing R1
Remedial Action Plan
Drawing 3136-011-1000 D2

(c) *Locations of all points of potential exposure to contaminants (water supply wells, surface water bodies, underground utilities, etc.), and*

Not applicable

(d) *Locations of all relevant hydrogeological features (recharge and discharge areas) in the immediate area*

Remedial Action Plan
Drawing 3136-011-1000 D2

* *Base map should be to scale (preferably 1" ≤ 100') and include all relevant physical features (buildings, roads, etc.) in the immediate area.*

5. *Description of Site Hydrogeology*

(a) *Stratigraphic logs of all boreholes using the modified Unified Standard Classification System and/or borehole geophysical methods. Log should include identification of system or method used (geophysical) and referenced to location on base map.*

Law Engineering Preliminary Assessment
Appendix A
Preliminary Groundwater Assessment
Appendix C
Groundwater Assessment - Phase II
Appendix C
Groundwater Assessment - Phase III
Appendix B

(b) *Minimum of two aquifer profiles (preferably intersection at approximate right angles and extending across the contamination site) exhibiting major hydrogeologic units (bedrock, gravel, sand, silt and clay layers) as determined by the logs.*

Groundwater Assessment - Phase III
Drawing 3136-008-1000 R2
Drawing 3136-008-1000 Figure 3
Drawing 3136-008-1000 R3
Drawing 3136-008-1000 R4
Drawing 3136-008-1000 R5

(c) *Evaluation of relevant aquifer parameters including results of aquifer tests, if available.*

Preliminary Groundwater Assessment
3. Hydrogeology
B. Site Hydrogeology
Groundwater Assessment - Phase II
2. Background
C. Groundwater Sampling and Analysis
3. Hydrogeology
B. Site Groundwater Hydrology
Groundwater Assessment - Phase III
2. Hydrogeology
B. Site Hydrology
Remedial Action Plan
4. Hydrogeological Characteristics

6. *Direction of Groundwater Flow*

(a) *Static water level measurements (referenced to a common datum) from a minimum of three (3) observation wells. Discretion should be used in selecting appropriate number and location of observations wells so as to ensure accurate representation of groundwater flow. Data should include depth to static water level, relative elevations of points from which depth is measured, and date of measurement.*

Preliminary Groundwater Assessment
2. Background
E. Groundwater Sampling and Analysis
Groundwater Assessment - Phase II
2. Background
C. Groundwater Sampling and Analysis
Groundwater Assessment - Phase III
2. Hydrogeology
B. Site Hydrology
Remedial Action Plan
4. Hydrogeological Characteristics

(b) *Description of methods used for water level measurement-including length of time period between well development and water level measurement.*

Preliminary Groundwater Assessment
2. Background
E. Groundwater Sampling and Analysis
Groundwater Assessment - Phase II
2. Background
C. Groundwater Sampling and Analysis
Groundwater Assessment - Phase III
2. Hydrogeology
B. Site Hydrology

(c) *Well construction records for all observation wells showing total depth of well, depth of screened interval, date of construction, etc.*

Law Engineering Preliminary Assessment
Appendix A
Preliminary Groundwater Assessment
Appendix A
Groundwater Assessment - Phase II
Appendix A
Groundwater Assessment - Phase III
Appendix A

(d) *Identification of significant features or activities which may affect local groundwater flow patterns.*

Preliminary Groundwater Assessment
3. Hydrogeology
B. Site Hydrogeology
Groundwater Assessment - Phase II
2. Hydrogeology
A. Regional Hydrogeology
Groundwater Assessment - Phase III
2. Hydrogeology
A. Site Geology

(e) *Flow net superimposed upon base map showing contours of equipotential lines and selected flowlines which exhibit direction(s) of groundwater flow. Static water level measurements used in flow net construction should be shown on the contour map.*

Remedial Action Plan
Drawing 3136-011-1000 D2

7. *Delineation of Groundwater Contamination*

(a) *Identification of the contaminants responsible for violations of groundwater quality standards i.e. qualitative characterization of the plume.*

Law Engineering Preliminary Assessment
IV. Groundwater Chemical Analysis
Appendix B
Preliminary Groundwater Assessment
4. Contamination Plume Delineation
A. Contamination Source
Groundwater Assessment - Phase II
4. Contamination Plume Delineation
A. Contamination Source Location
Groundwater Assessment - Phase III
4. Groundwater Sampling Program
B. Analytical Results
5. Conclusions
Remedial Action Plan
3. Treatment Objectives
4. Hydrogeological Characteristics

(b) *Horizontal and lateral component of plume geometry superimposed upon base map and exhibiting estimates of concentration contours.*

Preliminary Groundwater Assessment
4. Contamination Plume Delineation
B. Plume Migration
Groundwater Assessment - Phase II
4. Contamination Plume Delineation
B. Contaminant Plume Migration

(c) *Vertical component of plume geometry or contaminant profile referenced to aquifer profiles described in 5(b).*

Preliminary Groundwater Assessment
4. Contamination Plume Delineation
B. Plume Migration
Groundwater Assessment - Phase II
4. Contamination Plume Delineation
B. Contaminant Plume Migration

(d) *Analytical reports for all sampling activities including data of sample collection and references to sampling points shown on base map.*

Law Engineering Preliminary Assessment
Appendix B
Preliminary Groundwater Assessment
Appendix B
Groundwater Assessment - Phase II
Appendix B
Groundwater Assessment - Phase III
Appendix C
Remedial Action Plan
Appendix B

(e) *Description of sampling methods used - flushing time, extraction volume, etc.*

Preliminary Groundwater Assessment
2. Background
E. Groundwater Sampling and Analysis
F. Soil Sampling and Analysis
Groundwater Assessment - Phase III
4. Groundwater Sampling Program
A. Sampling Procedure

(f) *Well construction records for all wells utilized as sampling points showing total depth of well, depth of screened or open hole interval, date of construction, etc. (may reference well construction records compiled under item 6 (c).)*

Law Engineering Preliminary Assessment
Appendix A
Preliminary Groundwater Assessment
Appendix A
Groundwater Assessment - Phase II
Appendix A
Groundwater Assessment - Phase III
Appendix A

8. *Objectives of The Remedial Action Plan (RAP)*

(a) *Statement of goals and expected accomplishments of the RAP eg: source control and/or removal, reduction in contaminant concentrations, removal of "free product", containment or retardation of plume migration, reduction in areal/vertical extent of contamination, protection of nearby water supplies, etc.*

Remedial Action Plan
2. Introduction
3. Treatment Objectives

(b) *Proposal for establishing target clean-up concentrations based on underground water quality standards set forth in paragraph .0202 of 15 NCAC 2L and feasibility criteria established under paragraph .0103(e).*

Remedial Action Plan
3. Treatment Objectives

9. *Design and Operation of The Remedial Action System (RAS)*

(a) *Construction details (including design sketches) and facility layout (superimposed on base map) of all components of the RAS including recovery wells, interceptor trenches, infiltration galleries, groundwater treatment units, discharge facilties, etc.*

Remedial Action Plan
Drawing 3136-011-1000 I1
Drawing 3136-011-1000 I2

(b) *Operational characteristics and performance standards of all system components e.g. information on recovery wells should include duration of pumping, anticipated yield, and expected radius of influence. Data on treatment units should include influent concentrations, expected effluent concentrations, and flow rates). Discussion should address such factors as effectiveness, reliability, maintenance, and safety.*

Pending completion of treatment design

(c) *Consideration of all permits and approvals required for disposal of waste materials and/or discharge of effluents.*

Pending completion of treatment design

10. *Follow-up Site Monitoring and Evaluation of the RAS*

(a) *Plan for periodic monitoring to detect changes in groundwater movement, plume geometry, and qualitative characteristics of the plume; and to assess site response to disposal of effluent.*

Remedial Action Plan
5. Site Monitoring and Evaluation of the Remedial Action System

(b) *Plan for continuing re-evaluation of the effectiveness of the RAS in accomplishing objectives established under Item 8.*

Remedial Action Plan
5. Site Monitoring and Evaluation of the Remedial Action System

APPENDIX B

Results of Laboratory Analyses

MAIN

CHAS. T. MAIN, INC.

TWO FAIRVIEW PLAZA, 5950 FAIRVIEW RD., P.O.BOX 240236, CHARLOTTE, N.C. 28224, TEL. 704/554-1100

MAIN Sample Number

88-0663

Job #: 3136-10-1000

Date: 7-18-88

MAIN ANALYTICAL LABORATORY
RESULTS OF ANALYTICAL TESTING

CLIENT: Texfi, Inc.

Address: Bosch Blvd.
New Bern, N.C.

P.O. #:
Attn: Robert Martin

Sample No.	Date Taken	Sample Description
88-0663 (W-14)	not given	not given

Date Samples Rec'd.: 6/27/88
Rec'd/Logged By: SM/SR

Shipped By: R. Anderson
Invoice Date:

By	Parameter	Unit	Concentration 88-0663				
IEA	Volatiles (method 624)		*				

Remarks: * see attached sheet

Teresa M. Mullen
MAIN Analytical Lab

Comments | BQL - BELOW QUANTITATION LIMIT

GC/MS Purgeables

IEA Sample No. 356051 1 G.W. monitoring well # 14
Sample Identification 88-0663
Date Analyzed July 7, 1988 **By** Cornwell

Number	Compound	Quantitation Limit µg/L	Results Concentration µg/L
1	BENZENE	5	BQL
2	BROMODICHLOROMETHANE	5	BQL
3	BROMOFORM	5	BQL
4	BROMOMETHANE	10	BQL
5	CARBON TETRACHLORIDE	5	BQL
6	CHLOROBENZENE	5	BQL
7	CHLOROETHANE	10	BQL
8	2-CHLOROETHYLVINYL ETHER	5	BQL
9	CHLOROFORM	5	BQL
10	CHLOROMETHANE	10	BQL
11	DIBROMOCHLOROMETHANE	5	BQL
12	1,2-DICHLOROBENZENE	5	BQL
13	1,3-DICHLOROBENZENE	5	BQL
14	1,4-DICHLOROBENZENE	5	BQL
15	1,1-DICHLOROETHANE	5	BQL
16	1,2-DICHLOROETHANE	5	BQL
17	1,1-DICHLOROETHENE	5	BQL
18	trans-1,2-DICHLOROETHENE	5	BQL
19	1,2-DICHLOROPROPANE	5	BQL
20	cis-1,3-DICHLOROPROPENE	5	BQL
21	trans-1,3-DICHLOROPROPENE	5	BQL
22	ETHYL BENZENE	5	BQL
23	METHYLENE CHLORIDE	5	BQL
24	1,1,2,2-TETRACHLOROETHANE	5	BQL
25	TETRACHLOROETHENE	5	BQL
26	TOLUENE	5	BQL
27	1,1,1-TRICHLOROETHANE	5	BQL
28	1,1,2-TRICHLOROETHANE	5	BQL
29	TRICHLOROETHENE	5	BQL
30	TRICHLOROFLUOROMETHANE	5	BQL
31	VINYL CHLORIDE	10	BQL

Comments BQL - BELOW QUANTITATION LIMIT

GC/MS Purgeables

IEA Sample No. 356050 1 Process Water Well
Sample Identification 88-0637
Date Analyzed June 24, 1988 **By** Teismann

Number	Compound	Quantitation Limit µg/L	Results Concentration µg/L
1	BENZENE	5	BQL
2	BROMODICHLOROMETHANE	5	BQL
3	BROMOFORM	5	BQL
4	BROMOMETHANE	10	BQL
5	CARBON TETRACHLORIDE	5	BQL
6	CHLOROBENZENE	5	BQL
7	CHLOROETHANE	10	BQL
8	2-CHLOROETHYLVINYL ETHER	5	BQL
9	CHLOROFORM	5	BQL
10	CHLOROMETHANE	10	BQL
11	DIBROMOCHLOROMETHANE	5	BQL
12	1,2-DICHLOROBENZENE	5	BQL
13	1,3-DICHLOROBENZENE	5	BQL
14	1,4-DICHLOROBENZENE	5	BQL
15	1,1-DICHLOROETHANE	5	BQL
16	1,2-DICHLOROETHANE	5	BQL
17	1,1-DICHLOROETHENE	5	BQL
18	trans-1,2-DICHLOROETHENE	5	BQL
19	1,2-DICHLOROPROPANE	5	BQL
20	cis-1,3-DICHLOROPROPENE	5	BQL
21	trans-1,3-DICHLOROPROPENE	5	BQL
22	ETHYL BENZENE	5	BQL
23	METHYLENE CHLORIDE	5	BQL
24	1,1,2,2-TETRACHLOROETHANE	5	BQL
25	TETRACHLOROETHENE	5	BQL
26	TOLUENE	5	BQL
27	1,1,1-TRICHLOROETHANE	5	BQL
28	1,1,2-TRICHLOROETHANE	5	BQL
29	TRICHLOROETHENE	5	BQL
30	TRICHLOROFLUOROMETHANE	5	BQL
31	VINYL CHLORIDE	10	BQL

B. A. W. LABORATORIES, INCORPORATED
4424 TAGGART CREEK ROAD, SUITE 105
CHARLOTTE, N. C. 28208
(704)393-3930

August 1, 1989

REFERENCE NO.: 89G2568-1067

DATE RECEIVED: July 24, 1989

CLIENT: Charles T. Main, Inc.
5950 Fairview Road
Charlotte, North Carolina 28210

ATTENTION:

SAMPLE IDENTIFICATION:

Sample #1: Process
Sample #2: Well 3A
Sample #3: Well 4A
Sample #4: Well 8
Sample #5: Well 9
Sample #6: Well 9A
Sample #7: Well 11

ANALYSIS:

Sample	1	2	3	4	5	6	7
Nickel, ug/l	37.5	68.0	30.5	1,185.0	299.5	62.0	48.0
Zinc, ug/l	20.5	156.0	17.5	2,585.0	2,575.0	<5.0	<5.0
Total Suspended Solids, mg/l	----	34.0	50.0	78.0	178	3,088	16

ANALYZED BY,
B. A. W. LABORATORIES, INC.
N. C. CERTIFICATE NO. 48
N. C. CERTIFICATE NO. 37702
E.P.A. CERTIFICATE NO. 02006
S. C. CERTIFICATE NO. 99004

Michael R. Banker
MICHAEL R. BANKER

D. ANNE WILSON

"TESTING FOR A BETTER ENVIRONMENT"

4424 TAGGART CREEK ROAD, SUITE 105
CHARLOTTE, N. C. 28208
(704)393-3930

August 1, 1989

REFERENCE NO.: 89G2568B-1067

DATE RECEIVED: July 24, 1989

CLIENT: Charles T. Main, Inc.
5950 Fairview Road
Charlotte, North Carolina 28210

ATTENTION:

SAMPLE IDENTIFICATION:

Sample #1: Composite(From Cubitainers 1 Liter we will make) 83% Well 9A, 3-% will be remainder of each well no process

ANALYSIS:

Nickel, ug/l	237.0
Zinc, ug/l	396.5
Cyanide, ug/l	<2.0
Cadmium, ug/l	30.0
Mercury, ug/l	<1.0
Silver, ug/l	36.5
Copper, ug/l	38.0

ANALYZED BY,
B. A. W. LABORATORIES, INC.
N. C. CERTIFICATE NO. 48
N. C. CERTIFICATE NO. 37702
E.P.A. CERTIFICATE NO. 02006
S. C. CERTIFICATE NO. 99004

MICHAEL R. BANKER

D. ANNE WILSON

"TESTING FOR A BETTER ENVIRONMENT"

APPENDIX C

Calculations

RATIONALE FOR VOLATILE ORGANIC COMPOUND TREATMENT LIMITS

Thirteen Volatile Organic Compounds (VOC's) are present in the groundwater in detectable quantities. Of those thirteen compounds, it is recommended (based on the attached calculations) that the following five VOC's be monitored and treated to the indicated levels.

Vinyl chloride	0.15 µg/L
Methylene chloride	47.00 µg/L
1,1 - Dichloroethylene	2.80 µg/L
1,2 - Dichloroethane	3.80 µg/L
Trichloroethylene	32.00 µg/L

The eight VOC's not included in the above list were eliminated because they met one of the following criteria.

- Non-carcinogenic
- Cancer risk dosage a minimum of ten (10) times greater than the calculated weighted average concentration of the groundwater before treatment

8. "Methmds 330.4 (Titrimetric, DPD-FAS) and 330.5 (Spectrophotometric, DPD) for Chlorine, Total Residual." Methods for Chemical Analysis of Water and Wastes, EPA-600/4-79-020, U.S. Environmental Protection Agency, Environmental Monitoring and Support Laboratory, Cincinnati, Ohio 45268, March 1979.

9. Budde, W.L., and Eichelberger, J.W. "Performance Tests for the Evaluation of Computerized Eas Chromatography/Mass Spectrometry Equipment and Laboratories." EPA-600/4-80-025, U.S. Environmental Protection Agency, Environmental Monitoring and Support Laboratory, Cincinnati, Ohio 45268, April 1980.

10. Eichelberger, J.W., Harris, L.E., and Budde, W.L. "Reference Compound to Calibrate Ion Abundance Measurement in Gas Chromatography—Mass Spectrometry Systems." *Analytical Chemistry*, 47, 995-1000 (1975).

11. "Method Detection Limit for Methods 624 and 625." Olynyk, P., Budde, W.L., and Eichelberger, J.W. Unpublished report, May 14, 1980.

12. "EPA Method Study 29 EPA Method 624—Purgeables." EPA 600/4-84-054, National Technical Information Service, PB84-209915, Springfield, Virginia 22161, June 1984.

13. "Method Performance Data for Method 624." Memorandum from R. Slater and T. Pressley, U.S. Environmental Protection Agency, Environmental Monitoring and Support Laboratory, Cincinnati, Ohio 45268, January 17, 1984.

TABLE 1.—CHROMATOGRAPHIC CONDITIONS AND METHOD DETECTION LIMITS

Parameter	Retention time (min)	Method detection limit (µg/L)
Chloromethane	2.3	nd
Bromomethane	3.1	nd
Vinyl chloride	3.8	nd
Chloroethane	4.6	nd
Methylene chloride	6.4	2.8
Trichlorofluoromethane	8.3	nd
1,1-Dichloroethene	9.0	2.8
1,1-Dichloroethane	10.1	4.7
trans-1,2-Dichloroethene	10.8	1.6
Chloroform	11.4	1.6
1,2-Dichloroethane	12.1	2.8
1,1,1-Trichloroethane	13.4	3.8
Carbon tetrachloride	13.7	2.8
Bromodichloromethane	14.3	2.2
1,2-Dichloropropane	15.7	6.0
cis-1,3-Dichloropropene	15.9	5.0
Trichloroethene	16.5	1.9
Benzene	17.0	4.4
Dibromochloromethane	17.1	3.1
1,1,2-Trichloroethane	17.2	5.0
trans-1,3-Dichloropropene	17.2	nd
2-Chloroethylvinyl ether	18.6	nd
Bromoform	19.8	4.7
1,1,2,2-Tetrachloroethane	22.1	6.9
Tetrachloroethene	22.2	4.1
Toluene	23.5	6.0
Chlorobenzene	24.6	6.0
Ethyl benzene	26.4	7.2
1,3-Dichlorobenzene	33.9	nd
1,2-Dichlorobenzene	35.0	nd
1,4-Dichlorobenzene	35.4	nd

Column conditions: Carbopak B (60/80 mesh) coated with 1% SP-1000 packed in a 6 ft by 0.1 in. ID glass column with helium carrier gas at 30 mL/min. flow rate. Column temperature held at 45°C for 3 min., then programmed at 8°C/min. to 220°C and held for 15 min.

nd = not determined.

TABLE 2.—BFB KEY M/Z ABUNDANCE CRITERIA

Mass	m/z Abundance criteria
50	15 to 40% of mass 95.
75	30 to 60% of mass 95.
95	Base Peak, 100% Relative Abundance.
96	5 to 9% of mass 95.
173	<2% of mass 174.
174	>50% of mass 95.
175	5 to 9% of mass 174.
176	>95% but < 101% of mass 174.
177	5 to 9% of mass 176.

TABLE 3.—SUGGESTED SURROGATE AND INTERNAL STANDARDS

Compound	Retention time (min)*	Primary m/z	Secondary masses
Benzene d-6	17.0	84	
4-Bromofluorobenzene	28.3	95	174, 176
1,2-Dichloroethane d-4	12.*	102	
1,4-Difluorobenzene	19.6	114	63, 88
Ethylbenzene d-5	26.4	111	
Ethylbenzene d-10	26.4	98	
Fluorobenzene	18.4	96	70
Pentafluorobenzene	23.5	168	
Bromochloromethane	9.3	128	49, 130, 51
2-Bromo-1-chloropropane	19.2	77	79, 156
1, 4-Dichlorobutane	25.6	55	90, 92

*For chromatographic conditions, see Table 1.

TABLE 4.—CHARACTERISTIC MASSES FOR PURGEABLE ORGANICS

Parameter	Primary	Secondary
Chloromethane	50	52.
Bromomethane	94	96.

MAIN 1893

5156-11

Client: Charlotte - Richard Griffiths Job No.: OH Sheet 1 of 1
Subject: Cleanup limits based on 10^{-5} incremental lifetime cancer risk By: F. Cline Date: 8-19-89
Ckd.: Rev.:

PARAMETER	q_1^* $(mg/kg/d)^{-1}$	RSD(1) (µg/l)	RfD (mg/kg/d)	Cw (mg/l)
Vinyl chloride (A)	2.3	0.15		
Chloroethane	NA		NA*	
Methylene chloride (B)	7.5 E-03	47		
1,1 dichloroethylene (C)	6.0 E-1	0.58		
1,1 dichloroethane	NA		0.12*	4.0
chloroform (B)	6.1 E-3	57		
1,2 dichloroethane (B)	9.1 E-2	3.8		
1,1,1 trichloroethane			0.09*	3.15
Trichloroethylene (B)	1.1 E-2	32		
1,1,2 trichloroethane (C)	5.7 E-2	6.1		
Tetrachloroethylene (C)	5.1 E-2	6.9		
1,1,2,2 tetrachloroethane (C)	2.0 E-1	1.75		
Toluene	NA		0.3*	10.5

(1) 10^{-5} Risk for Risk specific dose (RSD)
NA = not available

$$RSD = \frac{70\,kg}{2\,l/d} \times \frac{10^{-5}}{q_1^*} \times 10^3 \frac{\mu g}{mg} = \frac{0.35}{q_1^*} \frac{\mu g}{l}$$

* PHRED . References Doses (October 1986, April 1988)
EPA Clean Up Document 530/80MW
(December 1987)

TABLE - 2
TEXFI INDUSTRIES
ANALYTICAL RESULTS

PARAMETER	WELL (ug/l)									
	2A	3A	4	4A	6	8	9	9A	11	12
1. Vinyl Chloride				38						
2. Chloroethane		40		110			10	11		
3. Methylene Chloride (Dichloromethane)	15	11	11	62	16	15	12	13	12J	11
4. 1,1 - Dichloroethylene		10		1200		37	1100		15J	
5. 1,1 - Dichloroethane	7J	230		120,000		290	8300	200	360	
6. Chloroform (Trichloromethane)				23			17			
7. 1,2 - Dichloroethane				460			20			
8. 1,1,1 Trichloroethane				90,000			32,000			
9. Trichloroethylene				620			11			
10. 1,1,2 - Trichloroethane				22			31			
11. Tetrachloroethylene				19						
12. 1,1,2,2 Tetrachloroethane				20						
13. Toluene				8J			18			

J = Estimated Concentration; values between the detection limit and one-half of that limit.

Source: Summary based upon analytical results reported in Phase III Groundwater Assessment

TEXFI/SOUTHRIDGE
TEXFI/SOUTHRIDGE
CALCULATION OF TREATMENT GOALS
FOOTNOTES

(A) 40CFR Part 136, Appendix A; nd=not determined.
(B) Cancer risk as taken from literature or data bases; na=not applicable-not carcinogenic
(C) Table 2 - Texfi Industries Analytical Results from Phase III Groundwater Assessment.
(D) Based on the following expected percent removals through air stripping:

1.	Vinyl Chloride	99.9 %
2.	Chloroethane	99.9 %
3.	Methylene Chloride	99.9 %
4.	1,1-Dichloroethylene	99.9 %
5.	1,1-Dichloroethane	80.0 %
6.	Chloroform	99.9 %
7.	1,2-Dichloroethane	80.0 %
8.	1,1,1-Trichloroethane	99.9 %
9.	Trichloroethylene	99.9 %
10.	1,1,2-Trichloroethane	99.9 %
11.	Tetrachloroethylene	99.9 %
12.	1,1,2,2-Tetrachloroethane	99.9 %
13.	Toluene	99.9 %

TEXFI/SOUTHRIDGE
CALCULATION OF TREATMENT GOALS
(SEE SEPARATE PAGE FOR FOOTNOTES)

PARAMETER	RECOVERY WELL	REPRESENTATIVE MONITORING WELL	RECOVERY FLOW RATE (GPM) a	CONC. IN MONITORING WELL (C) (ug/l) b	CALCULATION FOR WTD. AVE. CONC. c=a*b	WTD. AVE. CONC. (ug/l) d=sumc/suma	DETECTION LIMIT (A) (ug/l)	1:100,000 CANCER RISK (B) (ug/l)	CONC. AFTER TRMT. (D) (ug/l)	RECOMMENDED TREATMENT LIMIT (ug/l)
1. Vinyl Chloride	RW- 1	MW- 11	1.00	0	0.00					
	RW- 2	MW- 11	1.00	0	0.00					
	RW- 3	MW- 8	1.00	0	0.00					
	RW- 4	MW- 8	1.00	0	0.00					
	RW- 5	MW- 8	1.00	0	0.00					
	RW- 6	MW- 8	1.00	0	0.00					
	RW- 7	MW- 8	1.00	0	0.00					
	RW- 8	MW- 3A	1.00	0	0.00					
	RW- 9	MW- 3A	1.00	0	0.00					
	RW- 10	MW- 4A	0.25	38	9.50					
	RW- 11	MW- 9A	50.00	0	0.00					
			59.25		9.50	0.1603	nd	0.15	0.0002	0.15

TEXFI/SOUTHRIDGE
CALCULATION OF TREATMENT GOALS
(SEE SEPARATE PAGE FOR FOOTNOTES)

PARAMETER	RECOVERY WELL	REPRESENTATIVE MONITORING WELL	RECOVERY FLOW RATE (GPM) a	CONC. IN MONITORING WELL (C) (ug/l) b	CALCULATION FOR WTD. AVE. CONC. c=a*b	WTD. AVE. CONC. (ug/l) d=sumc/suma	DETECTION LIMIT (A) (ug/l)	1:100,000 CANCER RISK (B) (ug/l)	CONC. AFTER TRMT. (D) (ug/l)	RECOMMENDED TREATMENT LIMIT (ug/l)
2. Chloroethane	RW- 1	MW- 11	1.00	0	0.00					
	RW- 2	MW- 11	1.00	0	0.00					
	RW- 3	MW- 8	1.00	0	0.00					
	RW- 4	MW- 8	1.00	0	0.00					
	RW- 5	MW- 8	1.00	0	0.00					
	RW- 6	MW- 8	1.00	0	0.00					
	RW- 7	MW- 8	1.00	0	0.00					
	RW- 8	MW- 3A	1.00	40	40.00					
	RW- 9	MW- 3A	1.00	40	40.00					
	RW- 10	MW- 4A	0.25	110	27.50					
	RW- 11	MW- 9A	50.00	11	550.00					
			59.25		657.50	11.0970	nd	na	0.0111	none *

* EXPLANATION: no known cancer risk

TEXFI/SOUTHRIDGE
CALCULATION OF TREATMENT GOALS
(SEE SEPARATE PAGE FOR FOOTNOTES)

PARAMETER	RECOVERY WELL	REPRESENTATIVE MONITORING WELL	RECOVERY FLOW RATE (GPM) a	CONC. IN MONITORING WELL (C) (ug/l) b	CALCULATION FOR WTD. AVE. CONC. c=a*b	WTD. AVE. CONC. (ug/l) d=sumc/suma	DETECTION LIMIT (A) (ug/l)	1:100,000 CANCER RISK (B) (ug/l)	CONC. AFTER TRMT. (D) (ug/l)	RECOMMENDED TREATMENT LIMIT (ug/l)
3. Methylene Chloride (Dichloromethane)	RW- 1	MW- 11	1.00	12	12.00					
	RW- 2	MW- 11	1.00	12	12.00					
	RW- 3	MW- 8	1.00	15	15.00					
	RW- 4	MW- 8	1.00	15	15.00					
	RW- 5	MW- 8	1.00	15	15.00					
	RW- 6	MW- 8	1.00	15	15.00					
	RW- 7	MW- 8	1.00	15	15.00					
	RW- 8	MW- 3A	1.00	11	11.00					
	RW- 9	MW- 3A	1.00	11	11.00					
	RW- 10	MW- 4A	0.25	62	15.50					
	RW- 11	MW- 9A	50.00	13	650.00					
			59.25		786.50	13.2743	2.8	47.00	0.0133	47.00

TEXFI/SOUTHRIDGE
CALCULATION OF TREATMENT GOALS
(SEE SEPARATE PAGE FOR FOOTNOTES)

PARAMETER	RECOVERY WELL	REPRESENTATIVE MONITORING WELL	RECOVERY FLOW RATE (GPM) a	CONC. IN MONITORING WELL (C) (ug/l) b	CALCULATION FOR WTD. AVE. CONC. c=a*b	WTD. AVE. CONC. (ug/l) d=sumc/suma	DETECTION LIMIT (A) (ug/l)	1:100,000 CANCER RISK (B) (ug/l)	CONC. AFTER TRMT. (D) (ug/l)	RECOMMENDED TREATMENT LIMIT (ug/l)
4. 1,1-Dichloroethylene (1,1-Dichloroethene)	RW- 1	MW- 11	1.00	15	15.00					
	RW- 2	MW- 11	1.00	15	15.00					
	RW- 3	MW- 8	1.00	37	37.00					
	RW- 4	MW- 8	1.00	37	37.00					
	RW- 5	MW- 8	1.00	37	37.00					
	RW- 6	MW- 8	1.00	37	37.00					
	RW- 7	MW- 8	1.00	37	37.00					
	RW- 8	MW- 3A	1.00	10	10.00					
	RW- 9	MW- 3A	1.00	10	10.00					
	RW- 10	MW- 4A	0.25	1,200	300.00					
	RW- 11	MW- 9A	50.00	0	0.00					
			59.25		535.00	9.0295	2.8	0.58	0.0090	2.80

TEXFI/SOUTHRIDGE
CALCULATION OF TREATMENT GOALS
(SEE SEPARATE PAGE FOR FOOTNOTES)

PARAMETER	RECOVERY WELL	REPRESENTATIVE MONITORING WELL	RECOVERY FLOW RATE (GPM) a	CONC. IN MONITORING WELL (C) (ug/l) b	CALCULATION FOR WTD. AVE. CONC. c=a*b	WTD. AVE. CONC. (ug/l) d=sumc/suma	DETECTION LIMIT (A) (ug/l)	1:100,000 CANCER RISK (B) (ug/l)	CONC. AFTER TRMT. (D) (ug/l)	RECOMMENDED TREATMENT LIMIT (ug/l)
5. 1,1-Dichloroethane	RW- 1	MW- 11	1.00	360	360.00					
	RW- 2	MW- 11	1.00	360	360.00					
	RW- 3	MW- 8	1.00	290	290.00					
	RW- 4	MW- 8	1.00	290	290.00					
	RW- 5	MW- 8	1.00	290	290.00					
	RW- 6	MW- 8	1.00	290	290.00					
	RW- 7	MW- 8	1.00	290	290.00					
	RW- 8	MW- 3A	1.00	230	230.00					
	RW- 9	MW- 3A	1.00	230	230.00					
	RW- 10	MW- 4A	0.25	120,000	30000.00					
	RW- 11	MW- 9A	50.00	200	10000.00					
			59.25		42630.00	719.4937	4.7	na	143.8987	none *

* EXPLANATION: no known cancer risk

TEXFI/SOUTHRIDGE
CALCULATION OF TREATMENT GOALS
(SEE SEPARATE PAGE FOR FOOTNOTES)

PARAMETER	RECOVERY WELL	REPRESENTATIVE MONITORING WELL	RECOVERY FLOW RATE (GPM) a	CONC. IN MONITORING WELL (C) (ug/l) b	CALCULATION FOR WTD. AVE. CONC. c=a*b	WTD. AVE. CONC. (ug/l) d=sumc/suma	DETECTION LIMIT (A) (ug/l)	1:100,000 CANCER RISK (B) (ug/l)	CONC. AFTER TRMT. (D) (ug/l)	RECOMMENDED TREATMENT LIMIT (ug/l)
6. Chloroform	RW- 1	MW- 11	1.00	0	0.00					
(Trichloromethane)	RW- 2	MW- 11	1.00	0	0.00					
	RW- 3	MW- 8	1.00	0	0.00					
	RW- 4	MW- 8	1.00	0	0.00					
	RW- 5	MW- 8	1.00	0	0.00					
	RW- 6	MW- 8	1.00	0	0.00					
	RW- 7	MW- 8	1.00	0	0.00					
	RW- 8	MW- 3A	1.00	0	0.00					
	RW- 9	MW- 3A	1.00	0	0.00					
	RW- 10	MW- 4A	0.25	23	5.75					
	RW- 11	MW- 9A	50.00	0	0.00					
			59.25		5.75	0.0970	1.6	57.00	0.0001	none *

* EXPLANATION: cancer risk = wtd. ave. conc. X 587

TEXFI/SOUTHRIDGE
CALCULATION OF TREATMENT GOALS
(SEE SEPARATE PAGE FOR FOOTNOTES)

PARAMETER	RECOVERY WELL	REPRESENTATIVE MONITORING WELL	RECOVERY FLOW RATE (GPM) a	CONC. IN MONITORING WELL (C) (ug/l) b	CALCULATION FOR WTD. AVE. CONC. c=a*b	WTD. AVE. CONC. (ug/l) d=sumc/suma	DETECTION LIMIT (A) (ug/l)	1:100,000 CANCER RISK (B) (ug/l)	CONC. AFTER TRMT. (D) (ug/l)	RECOMMENDED TREATMENT LIMIT (ug/l)
7. 1,2-Dichloroethane	RW- 1	MW- 11	1.00	0	0.00					
	RW- 2	MW- 11	1.00	0	0.00					
	RW- 3	MW- 8	1.00	0	0.00					
	RW- 4	MW- 8	1.00	0	0.00					
	RW- 5	MW- 8	1.00	0	0.00					
	RW- 6	MW- 8	1.00	0	0.00					
	RW- 7	MW- 8	1.00	0	0.00					
	RW- 8	MW- 3A	1.00	0	0.00					
	RW- 9	MW- 3A	1.00	0	0.00					
	RW- 10	MW- 4A	0.25	460	115.00					
	RW- 11	MW- 9A	50.00	0	0.00					
			59.25		115.00	1.9409	2.8	3.80	0.3882	3.80

TEXFI/SOUTHRIDGE
CALCULATION OF TREATMENT GOALS
(SEE SEPARATE PAGE FOR FOOTNOTES)

PARAMETER	RECOVERY WELL	REPRESENTATIVE MONITORING WELL	RECOVERY FLOW RATE (GPM) a	CONC. IN MONITORING WELL (C) (ug/l) b	CALCULATION FOR WTD. AVE. CONC. c=a*b	WTD. AVE. CONC. (ug/l) d=sumc/suma	DETECTION LIMIT (A) (ug/l)	1:100,000 CANCER RISK (B) (ug/l)	CONC. AFTER TRMT. (D) (ug/l)	RECOMMENDED TREATMENT LIMIT (ug/l)
8. 1,1,1-Trichloroethane	RW- 1	MW- 11	1.00	0	0.00					
	RW- 2	MW- 11	1.00	0	0.00					
	RW- 3	MW- 8	1.00	0	0.00					
	RW- 4	MW- 8	1.00	0	0.00					
	RW- 5	MW- 8	1.00	0	0.00					
	RW- 6	MW- 8	1.00	0	0.00					
	RW- 7	MW- 8	1.00	0	0.00					
	RW- 8	MW- 3A	1.00	0	0.00					
	RW- 9	MW- 3A	1.00	0	0.00					
	RW- 10	MW- 4A	0.25	90,000	22500.00					
	RW- 11	MW- 9A	50.00	0	0.00					
			59.25		22500.00	379.7468	3.8	na	0.3797	none *

* EXPLANATION: no known cancer risk

TEXFI/SOUTHRIDGE
CALCULATION OF TREATMENT GOALS
(SEE SEPARATE PAGE FOR FOOTNOTES)

PARAMETER	RECOVERY WELL	REPRESENTATIVE MONITORING WELL	RECOVERY FLOW RATE (GPM) a	CONC. IN MONITORING WELL (C) (ug/l) b	CALCULATION FOR WTD. AVE. CONC. c=a*b	WTD. AVE. CONC. (ug/l) d=sumc/suma	DETECTION LIMIT (A) (ug/l)	1:100,000 CANCER RISK (B) (ug/l)	CONC. AFTER TRMT. (D) (ug/l)	RECOMMENDED TREATMENT LIMIT (ug/l)
9. Trichloroethylene (Trichloroethene)	RW- 1	MW- 11	1.00	0	0.00					
	RW- 2	MW- 11	1.00	0	0.00					
	RW- 3	MW- 8	1.00	0	0.00					
	RW- 4	MW- 8	1.00	0	0.00					
	RW- 5	MW- 8	1.00	0	0.00					
	RW- 6	MW- 8	1.00	0	0.00					
	RW- 7	MW- 8	1.00	0	0.00					
	RW- 8	MW- 3A	1.00	0	0.00					
	RW- 9	MW- 3A	1.00	0	0.00					
	RW- 10	MW- 4A	0.25	620	155.00					
	RW- 11	MW- 9A	50.00	0	0.00					
			59.25		155.00	2.6160	1.9	32.00	0.0026	32.00

TEXFI/SOUTHRIDGE
CALCULATION OF TREATMENT GOALS
(SEE SEPARATE PAGE FOR FOOTNOTES)

PARAMETER	RECOVERY WELL	REPRESENTATIVE MONITORING WELL	RECOVERY FLOW RATE (GPM) a	CONC. IN MONITORING WELL (C) (ug/l) b	CALCULATION FOR WTD. AVE. CONC. c=a*b	WTD. AVE. CONC. (ug/l) d=sumc/suma	DETECTION LIMIT (A) (ug/l)	1:100,000 CANCER RISK (B) (ug/l)	CONC. AFTER TRMT. (D) (ug/l)	RECOMMENDED TREATMENT LIMIT (ug/l)
10. 1,1,2-Trichloroethane	RW- 1	MW- 11	1.00	0	0.00					
	RW- 2	MW- 11	1.00	0	0.00					
	RW- 3	MW- 8	1.00	0	0.00					
	RW- 4	MW- 8	1.00	0	0.00					
	RW- 5	MW- 8	1.00	0	0.00					
	RW- 6	MW- 8	1.00	0	0.00					
	RW- 7	MW- 8	1.00	0	0.00					
	RW- 8	MW- 3A	1.00	0	0.00					
	RW- 9	MW- 3A	1.00	0	0.00					
	RW- 10	MW- 4A	0.25	22	5.50					
	RW- 11	MW- 9A	50.00	0	0.00					
			59.25		5.50	0.0928	5.0	6.10	0.0001	none *

* EXPLANATION: cancer risk = wtd. ave. conc. X 66

TEXFI/SOUTHRIDGE
CALCULATION OF TREATMENT GOALS
(SEE SEPARATE PAGE FOR FOOTNOTES)

PARAMETER	RECOVERY WELL	REPRESENTATIVE MONITORING WELL	RECOVERY FLOW RATE (GPM) a	CONC. IN MONITORING WELL (C) (ug/l) b	CALCULATION FOR WTD. AVE. CONC. c=a*b	WTD. AVE. CONC. (ug/l) d=sumc/suma	DETECTION LIMIT (A) (ug/l)	1:100,000 CANCER RISK (B) (ug/l)	CONC. AFTER TRMT. (D) (ug/l)	RECOMMENDED TREATMENT LIMIT (ug/l)
11. Tetrachloroethylene	RW- 1	MW- 11	1.00	0	0.00					
(Tetrachloroethene)	RW- 2	MW- 11	1.00	0	0.00					
	RW- 3	MW- 8	1.00	0	0.00					
	RW- 4	MW- 8	1.00	0	0.00					
	RW- 5	MW- 8	1.00	0	0.00					
	RW- 6	MW- 8	1.00	0	0.00					
	RW- 7	MW- 8	1.00	0	0.00					
	RW- 8	MW- 3A	1.00	0	0.00					
	RW- 9	MW- 3A	1.00	0	0.00					
	RW- 10	MW- 4A	0.25	19	4.75					
	RW- 11	MW- 9A	50.00	0	0.00					
			59.25		4.75	0.0802	4.1	6.90	0.0001	none *

* EXPLANATION: cancer risk = wtd. ave. conc. X 86

TEXFI/SOUTHRIDGE
CALCULATION OF TREATMENT GOALS
(SEE SEPARATE PAGE FOR FOOTNOTES)

PARAMETER	RECOVERY WELL	REPRESENTATIVE MONITORING WELL	RECOVERY FLOW RATE (GPM) a	CONC. IN MONITORING WELL (C) (ug/l) b	CALCULATION FOR WTD. AVE. CONC. c=a*b	WTD. AVE. CONC. (ug/l) d=sumc/suma	DETECTION LIMIT (A) (ug/l)	1:100,000 CANCER RISK (B) (ug/l)	CONC. AFTER TRMT. (D) (ug/l)	RECOMMENDED TREATMENT LIMIT (ug/l)
12. 1,1,2,2-Tetrachloroethane	RW- 1	MW- 11	1.00	0	0.00					
	RW- 2	MW- 11	1.00	0	0.00					
	RW- 3	MW- 8	1.00	0	0.00					
	RW- 4	MW- 8	1.00	0	0.00					
	RW- 5	MW- 8	1.00	0	0.00					
	RW- 6	MW- 8	1.00	0	0.00					
	RW- 7	MW- 8	1.00	0	0.00					
	RW- 8	MW- 3A	1.00	0	0.00					
	RW- 9	MW- 3A	1.00	0	0.00					
	RW- 10	MW- 4A	0.25	20	5.00					
	RW- 11	MW- 9A	50.00	0	0.00					
			59.25		5.00	0.0844	6.9	1.75	0.0001	none *

* EXPLANATION: cancer risk = wtd. ave. conc. X 21

TEXFI/SOUTHRIDGE
CALCULATION OF TREATMENT GOALS
(SEE SEPARATE PAGE FOR FOOTNOTES)

PARAMETER	RECOVERY WELL	REPRESENTATIVE MONITORING WELL	RECOVERY FLOW RATE (GPM) a	CONC. IN MONITORING WELL (C) (ug/l) b	CALCULATION FOR WTD. AVE. CONC. c=a*b	WTD. AVE. CONC. (ug/l) d=sumc/suma	DETECTION LIMIT (A) (ug/l)	1:100,000 CANCER RISK (B) (ug/l)	CONC. AFTER TRMT. (D) (ug/l)	RECOMMENDED TREATMENT LIMIT (ug/l)
13. Toluene	RW- 1	MW- 11	1.00	0	0.00					
	RW- 2	MW- 11	1.00	0	0.00					
	RW- 3	MW- 8	1.00	0	0.00					
	RW- 4	MW- 8	1.00	0	0.00					
	RW- 5	MW- 8	1.00	0	0.00					
	RW- 6	MW- 8	1.00	0	0.00					
	RW- 7	MW- 8	1.00	0	0.00					
	RW- 8	MW- 3A	1.00	0	0.00					
	RW- 9	MW- 3A	1.00	0	0.00					
	RW- 10	MW- 4A	0.25	8	2.00					
	RW- 11	MW- 9A	50.00	0	0.00					
			59.25		2.00	0.0338	6.0	na	0.0000	none *

* EXPLANATION: cancer risk = wtd. ave. conc. X 0

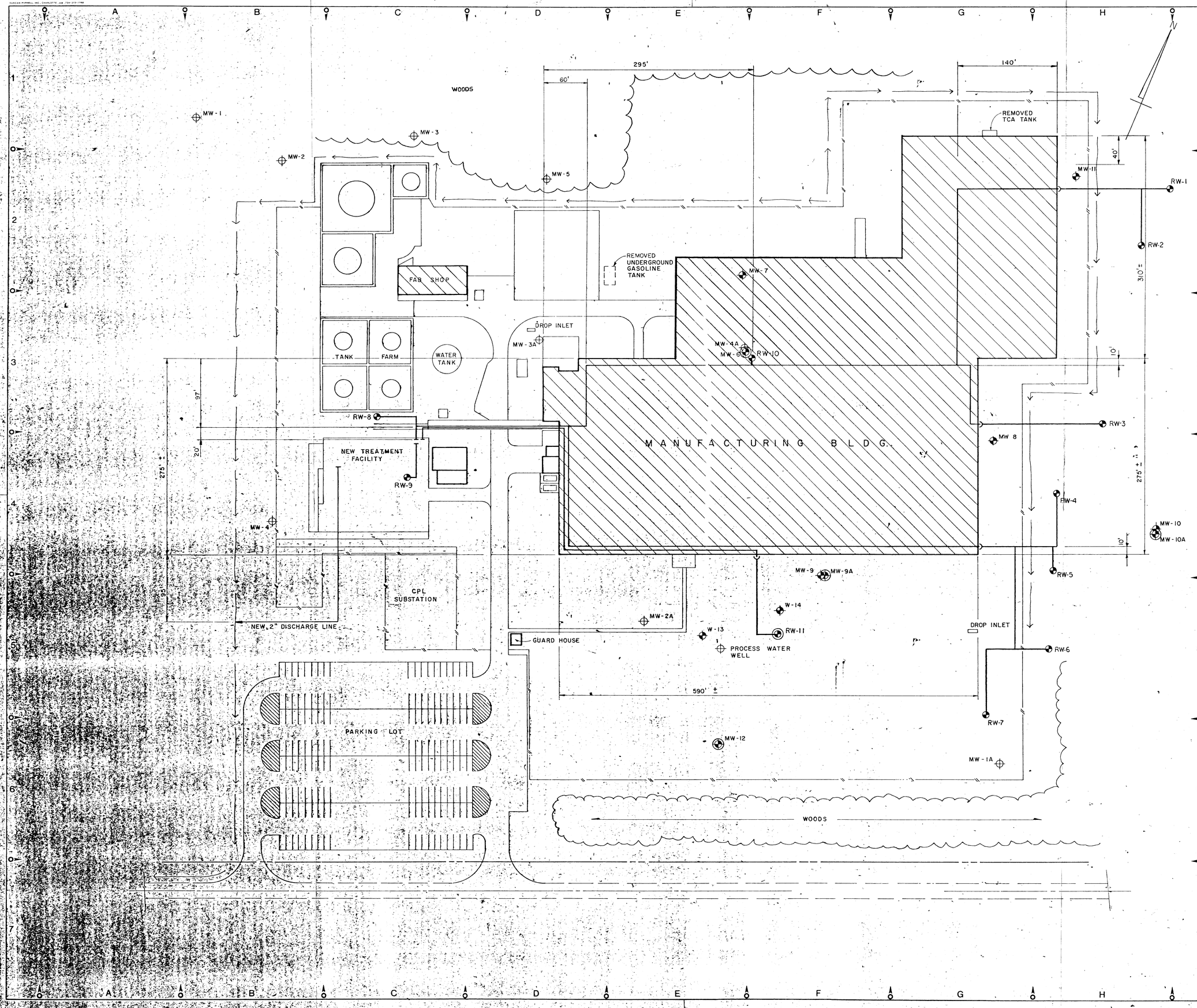

NOTES

1. PIPING TO BE FIELD ROUTED ON EXISTING PIPE RACKS. ROUTING AS SHOWN IS ONLY APPROXIMATE. ABOVE GROUND EXTERIOR PIPING SHALL BE INSULATED.

LEGEND

- PROPOSED PUMPING WELL
- EXISTING MONITORING WELL
- PROPOSED DEEP WELL
- EXISTING DEEP WELL

NO	DATE	DESCRIPTION
2	6/8	SITING OF INFILTRATION GALLERY
1	12/3	Issued preliminary as part of Remedial Action Plan

DRAWN BY J. WRIGHT | CHECKED BY
DESIGN SUPV. | RESP. ENGR.
SUPV. DISC. ENGR. | CH. DISC. ENGR.
PROJECT ENG. MGR.
PROJECT MGR.
IN CHARGE

DRAWN | CHECKED | DES SUPV. | RESP. ENGR. | SUP DISC ENG. | CH DISC ENG. | PR. ENG. MGR. | MP

MAIN 1893

CHAS. T. MAIN, INC.
BOSTON • NEW YORK • CHARLOTTE • PORTLAND

CLIENT/PROJECT TITLE
TEXFI INDUSTRIES
NEW BERN, NORTH CAROLINA
GROUNDWATER RECOVERY SYSTEM

DEPT. INDUSTRIAL | NO. 30

DRAWING DESCRIPTION
SITE PLAN

SCALE 1" = 50'-0" (0 50 100 150)

MAIN'S DWG. NO. 3136-11-1000-D1 | REV. A

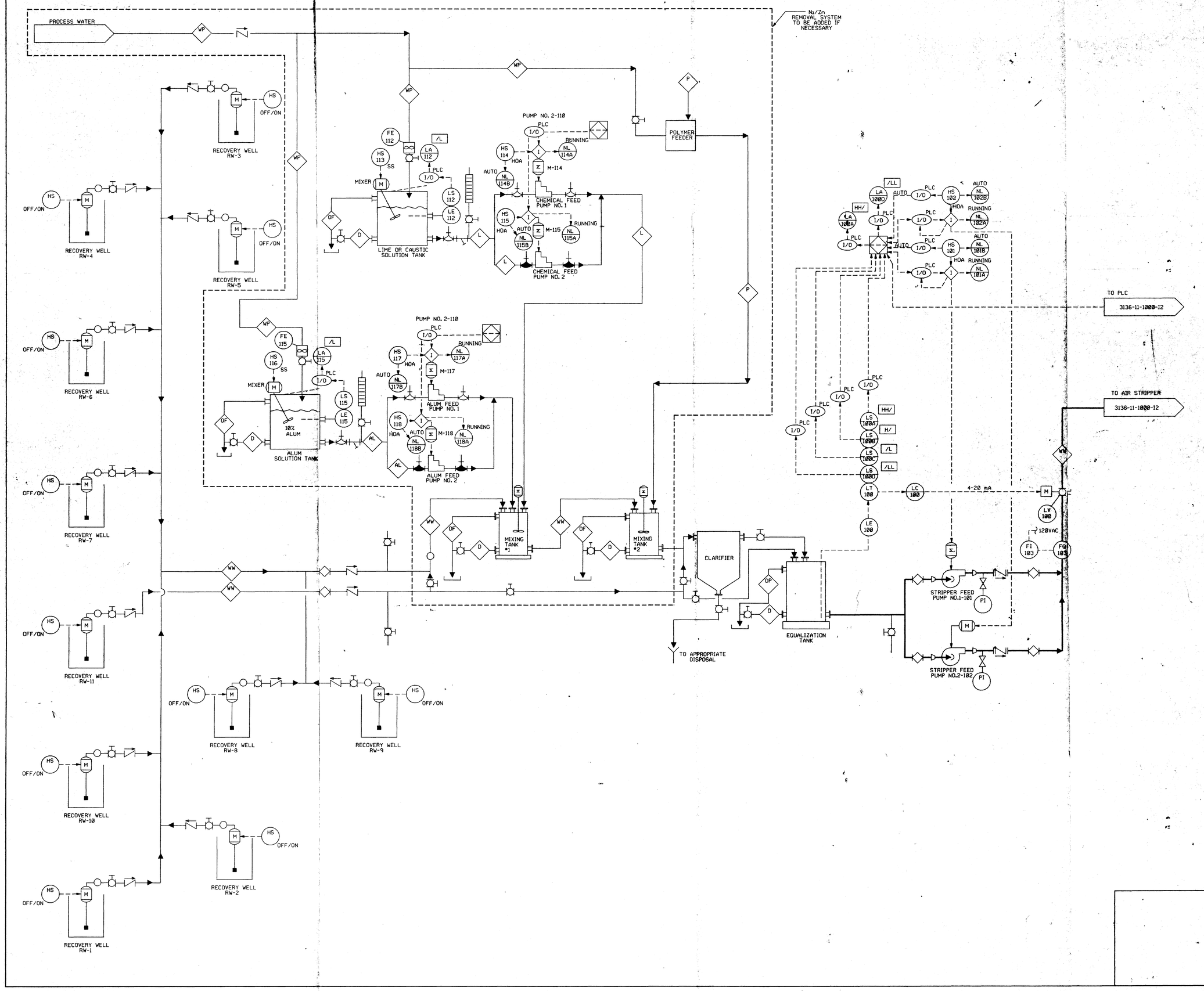

NOTES:

SEE DRAWING I2 FOR LEGEND

1	10/13	ISSUED PRELIMINARY AS PART OF REMEDIAL ACTION PLAN

DRAWN BY	CHECKED BY
DESIGN SUPV.	RESP.ENGR.
SUPV.DISC.ENGR.	CH.DISC.ENGR.
PROJECT ENG.MGR.	
PROJECT MGR.	
IN CHARGE	

MAIN 1896

CHAS. T. MAIN, INC.

BOSTON • NEW YORK • CHARLOTTE • PORTLAND

CLIENT/PROJECT TITLE

TEXFI INDUSTRIES
NEW BERN N.C.
GROUNDWATER TREATMENT DESIGN

DEPT. ENVIRONMETAL NO. 30

DRAWING DESCRIPTION

GROUNDWATER TREATMENT SYSTEM
PIPING & INSTRUMENTATION DIAGRAM

SCALE

MAIN'S DWG.NO. 3136-11-1000-I1 REV.

SHEET 1 OF 2

CAD NO. TEXFI

00/00/89

M. ROBERTS

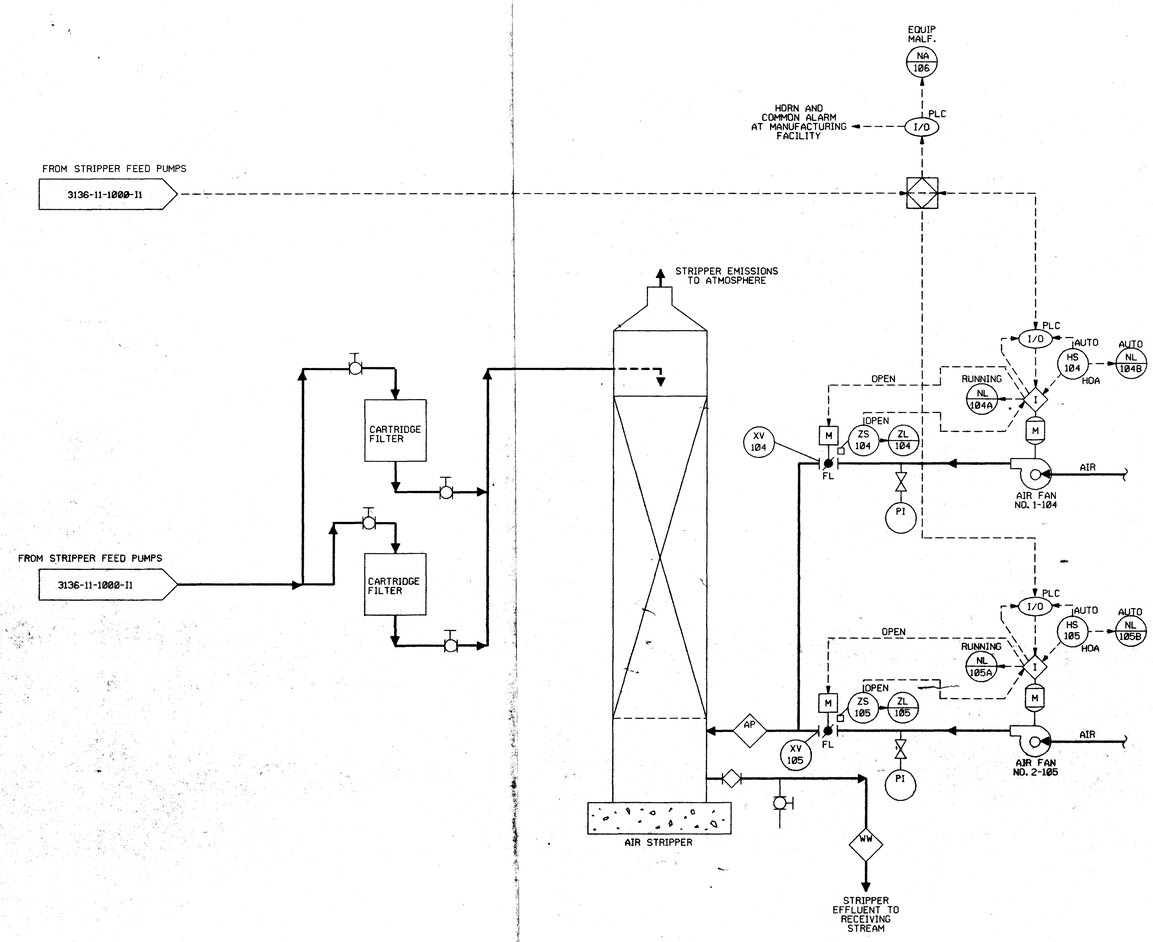

LEGEND

- BALL CONTROL VALVE WITH ACTUATOR
- MOTORIZED VALVE ACTUATOR
- AC MOTOR
- DRAIN
- CENTRIFUGAL PUMP
- CENTRIFUGAL FAN
- WELL PUMP
- VALVE
- SAMPLING VALVE
- PLUG VALVE
- SWING CHECK VALVE
- BUTTERFLY VALVE
- FLOW METER
- SIGHT FLOW INDICATOR
- LOCAL INSTRUMENT
- PANEL INSTRUMENT
- PROGRAMMABLE CONTROLLER INPUT/OUTPUT POINT
- PROGRAMMABLE CONTROLLER LOGIC FUNCTION
- HARD WIRED INTERLOCK
- (E) EXISTING WELL

INSTRUMENT TAG NUMBER

LA 1000 — DEVICE TAG — LOOP NUMBER

1ST LETTER	2ND LETTER
L = LEVEL	A = ALARM
N = DEVICE STATUS	E = ELEMENT
F = FLOW	C = CONTROLLER
X = ON/OFF	T = TRANSMITTER
P = PRESSURE	I = INDICATOR
H = HAND	S = SWITCH
Z = POSITION	V = VALVE
	Y = RELAY CONVERTER
	Q = TOTALIZER

NOTES:

1	10/13	ISSUED PRELIMINARY AS PART OF REMEDIAL ACTION PLAN

DRAWN BY | CHECKED BY
DESIGN SUPV. | RESP.ENGR.
SUPV.DISC.ENGR. | CH.DISC.ENGR.
PROJECT ENG.MGR.
PROJECT MGR.
IN CHARGE

MAIN 1898
CHAS. T. MAIN, INC.
BOSTON • NEW YORK • CHARLOTTE • PORTLAND

CLIENT/PROJECT TITLE
TEXFI INDUSTRIES
NEW BERN N.C.
GROUNDWATER TREATMENT DESIGN

DEPT. ENVIRONMETAL | NO. 30

DRAWING DESCRIPTION
GROUNDWATER TREATMENT SYSTEM
PIPING & INSTRUMENTATION DIAGRAM

SCALE

MAIN'S DWG.NO. 3136-11-1000-I2 | SHEET 2 OF 2 | REV.

CAD NO. TEXFI | 08/08/89

M ROBERTS