Geosyntec Consultants of NC, PC
2501 Blue Ridge Rd, Suite 430
Raleigh, NC 27607
PH 919.870.0576
www.geosyntec.com

7 October 2016

Mr. Adam Ulishney
Hydrogeologist
Inactive Hazardous Sites Branch
North Carolina Department of Environment and Natural Resources
217 West Jones Street
Raleigh, NC 27603

Subject: Source Area Soil Vapor Extraction System Work Plan
Former Rental Towel Uniform/National Service Industries, Inc. Site
Site Location: 610 Woody Drive, Graham, Alamance County, NC
IHSB# NONCD0001655

Dear Mr. Ulishney:

On behalf of our client G&K Services, Inc., (G&K), Geosyntec Consultants of NC, PC (Geosyntec) has prepared this Source Area Soil Vapor Extraction System Work Plan (SVE Work Plan) to install and monitor a Soil Vapor Extraction (SVE) remediation system within the source area of the above-described Site in Graham, NC.

Please contact us if you need any additional information or if you have any questions regarding this work plan.

Sincerely,

Kaitlyn Rhonehouse, PE
Project Engineer

Copies to: Peter Moore - G&K
Sara Ethier - G&K
Beau Hodge, P.G. - Geosyntec

GN5616/Source Area SVE System Work Plan

Prepared for

G & K Service, Inc.
5995 Opus Parkway, Suite 500
Minnetonka, MN 55343

SOURCE AREA SOIL VAPOR EXTRACTION SYSTEM WORK PLAN

FORMER RENTAL TOWEL UNIFORM/NATIONAL SERVICES INDUSTRIES SITE
610 WOODY DRIVE, ALAMANCE COUNTY, GRAHAM, NORTH CAROLINA
IHSB# NONCD0001655

Prepared by

engineers | scientists | innovators
Geosyntec Consultants of NC, PC
2501 Blue Ridge Rd, Suite 430
Raleigh, North Carolina 27607

Project Number GN5616A

October 2016

I, Kaitlyn Rhonehouse, a Licensed Engineer for Geosyntec Consultants of NC, PC do attest that the information in this report is correct and accurate to the best of my knowledge.

NORTH CAROLINA PROFESSIONAL SEAL 043548 ENGINEER KAITLYN RHONEHOUSE

K. Rhonehouse
10/7/16

Geosyntec Consultants of NC, PC is licensed to practice engineering in North Carolina. The certification number (Firm's License Number) is C-3500.

Geosyntec Consultants of NC, PC is licensed to practice geology in North Carolina. The certification number (Firm's License Number) is C-295.

TABLE OF CONTENTS

1. INTRODUCTION 1

2. SITE BACKGROUND 2

3 SYSTEM DESIGN 5
- 3.1 Site-Specific Design Considerations 5
- 3.2 Soil Vapor Extraction System 5
  - 3.2.1 Basis of Design 6
  - 3.2.2 Soil Vapor Extraction Well Installation 7
  - 3.2.3 System Components 8

4. CONSTRUCTION PLANS, SPECIFICATIONS, AND PROCEDURES 10
- 4.1 Construction Plans 10
- 4.2 Utility Clearances 10
- 4.3 Monitoring Procedures During Construction 10
  - 4.3.1 Well Installation 10
  - 4.3.2 System Installation 10
- 4.4 Implementation Schedule 11
- 4.5 Management of Remedial Waste 11

5. OPERATION, MAINTENANCE, AND MONITORING PLAN 12
- 5.1 Start-up and Shut-down Procedures 12
- 5.2 Routine Maintenance and Monitoring Procedures 13
- 5.3 Monitoring Schedule 14
- 5.4 SVE Termination Criteria 14
- 5.5 Health and Safety Plan 16

6. REQUIRED PERMITS AND APPROVALS 17

7. REPORTING 17

8. REFERENCES 18

TABLE OF CONTENTS (Continued)

LIST OF FIGURES

Figure 1 Site Location Map
Figure 2 Site and Surrounding Area Map
Figure 3 Source Area Investigation - Soil Results Industrial PCE and TCE Exceedances
Figure 4 SVE System Radius of Influence (ROI) Capture Footprint
Figure 5 Soil Vapor Extraction Well System Layout
Figure 6 Soil Vapor Extraction System Details
Figure 7 Soil Vapor Extraction System Process Instrumentation Diagram

APPENDIX

Appendix A SVE Pilot Test Results and Calculations
Appendix B Flow Rate and Permeability Calculations
Appendix C Friction Loss Calculations and Blower Specifications
Appendix D North Carolina Administrative Code 2Q Air Quality Permit Procedures (Section 02Q .0102 only) and G&K Air Permit
Appendix E Mass Calculations

1. INTRODUCTION

On behalf of G&K Services, Inc. (G&K), Geosyntec Consultants of NC, PC (Geosyntec) has prepared this Source Area Soil Vapor Extraction Work Plan (SVE Work Plan) to describe proposed activities to be performed within the apparent source area ("the source area") of the Former Rental Towel and Uniform/National Services Industries Site (herein referred to as "Subject Site" or "Site" and shown on **Figure 1**) (IHSB# NONCD0001655).[1] G&K is proposing to voluntarily implement a Soil Vapor Extraction (SVE) remedy within the vicinity of the source area to remediate Site-related chlorinated volatile organic compound (cVOC) impacts and mitigate the potential for vapor intrusion (VI) into the main Site building. The source area is believed to be located beneath the facility and proximal to the wash floor area, where it is understood that RTUS historically conducted dry-cleaning operations. The SVE system is designed to capture cVOCs in soil vapor from within the unsaturated zone (i.e. vadose zone) soils proximal to the apparent Site source area. G&K will operate the SVE system until mass removal by the system approaches asymptotic[2] levels and vapor intrusion into the building has been mitigated or replaced with an alternate approach.

This work plan includes a summary of the Site history (Section 2), a description of the remedy design (Section 3), a summary of construction plans (Section 4), and a description of the operation, maintenance, and monitoring (Section 5) for the SVE system. The SVE Work Plan incorporates considerations from the North Carolina Department of Environmental Quality (NCDEQ) Non-Residential Vapor Intrusion Screening Levels (NCDEQ, 2016).

[1] The "Dorothy Eason Residence" is a name previously used by NCDEQ to describe the Subject Site.
[2] A SVE termination criterion is defined in section 5.4. For the purposes of this document, asymptotic removal is a point during SVE operation where the change in VOC concentration over time is small relative to initial changes in concentration upon SVE start-up.

2. SITE BACKGROUND

As current owner of the Site, G&K is working voluntarily with the NCDEQ to assess and mitigate potential hazards associated with historical environmental impacts at the Site.

The Responsible Parties, the former owners of the Site, claim not to have the financial capability to continue remedial efforts. In 1991, the Site was purchased from Rental Towel and Uniform Service, Inc. (RTUS) by National Services Industries, Inc. (NSI) and RTUS retained contractual liability for addressing subsurface contamination. Likewise, in 1997, G&K purchased the Site from NSI and NSI retained contractual responsibility for contaminant liabilities pursuant to an Asset Purchase Agreement (APA). Englewood Holdings Corp. (EHC), a subsidiary of Kelly Capital, LLC (KC), has identified itself as the successor to NSI.

The Site property encompasses approximately 17 acres and is located at 610 Woody Drive, Graham, Alamance County, North Carolina (36°3’31.43”N, 79°23’8.54”W). The Site includes a 170,000 square-foot building, which was constructed in 1972, and a maintenance facility, which is located to the south of the main facility building. The Site location is shown on **Figure 1** and the Site and surrounding area are shown on **Figure 2**. Surrounding properties include commercial/industrial and residential land uses.

The Site has reportedly housed commercial laundering operations since it was first developed by RTUS in 1972. Facility operations conducted by RTUS included on-Site dry-cleaning utilizing tetrachloroethene (PCE) until 1981. PCE has not been used by G&K on the Site at any time.

In August 1988, NCDEQ identified PCE impacts in water samples collected from nearby residences in the vicinity of the Site, which resulted in the issuance of a Notice of Violation (NOV) to RTUS on 24 July 1989. On-Site and off-Site environmental investigation activities were conducted in 1989 and 1990, which included the installation of monitoring wells and groundwater sampling that identified several cVOCs in groundwater. PCE and trichloroethene (TCE), a degradation product of PCE, have been identified as the cVOCs detected at the highest concentrations at both on-Site and off-Site locations.

In 1990, a Remedial Action Plan (RAP) was prepared on behalf of RTUS to address cVOC impacts. The RAP included the installation and operation of a groundwater recovery and treatment system that included on-Site treatment for cVOCs. Additionally, in July 1991, a soil vapor extraction (SVE) system was installed to recover cVOCs from unsaturated zone soils.

Environmental investigation activities and remediation operations were ceased in approximately 2002. Between 2002 and 2013, investigations were limited while the responsible parties (RTUS, NSI, and EHC [a subsidiary of KC]) determined who would proceed with the investigation and environmental remediation at the Site. Negotiations between the responsible parties have not been productive; this led G&K to volunteer to perform the environmental remediation work at the Site.

In October 2013, on behalf of G&K, Geosyntec submitted a Site Status Report (SSR) to NCDEQ documenting the results of an August 2013 groundwater sampling event of on-Site wells. The report concluded that further assessment was needed to evaluate conditions off-Site related to potential groundwater impacts to potable wells and to assess the potential for vapor intrusion (VI).

In January 2015, Geosyntec, on behalf of G&K, submitted an Interim Remedial Assessment Report (IRAR) documenting the results of efforts to assess off-Site groundwater and to assess the potential for VI. The report concluded, amongst other things, that the highest concentrations of PCE in on-Site sub-slab soil gas coincide with the location of the highest detection of PCE in groundwater, that this area is an apparent source area (referred to herein as the "source area" as shown on **Figure 2** and **Figure 3**) for cVOC impacts; and that there is a complete pathway for VI into the on-Site facility building.

To further investigate the Source Area, a Source Area Investigation Work Plan (February 2015) and Source Area Pre-Design Investigation Work Plan (October 2015) were prepared and implemented to investigate the distribution of cVOC impacts in and near the Source Area, and to collect information about the physical characteristics of the subsurface relevant to the assessment of potential remedial options. The scope of work for the source area investigation included soil sampling, soil gas sampling, an SVE pilot test, groundwater monitoring well installation and sampling, groundwater profiling, and hydraulic conductivity testing. The results of the source area investigation were

presented to NCDEQ in an 8 June 2016 Source Area Investigation Report. The June 2016 report concluded that SVE is a viable remedial alternative for treating cVOC impacts in the unsaturated zone in the vicinity of the source area. Since January 2016, periodic (currently quarterly) email updates have been submitted to NCDEQ to document ongoing activities performed to assess and mitigate cVOC impacts associated with the Site. Geosyntec's 12 August 2016 email update indicated that the selected remedial design for the source area would include the installation and operation of an SVE system to treat source material in the vadose zone and mitigate vapor intrusion in the building. This Work Plan has been prepared to present the design and associated monitoring for the proposed SVE system at the Site.

3. SYSTEM DESIGN

This section summarizes the design for the SVE system. As stated above, the objectives of implementing a SVE system are to remove residual VOC mass in the unsaturated zone proximal to the source area and to mitigate vapor intrusion into the building. To achieve these objectives, G&K will operate the SVE system until VOC mass removal rates approach an asymptote and operation of the SVE system is no longer required to mitigate vapor intrusion into the building, after which time the system may be decommissioned. Section 5.4 provides a detailed description of the proposed SVE termination criterion.

3.1 Site-Specific Design Considerations

The following site-specific characteristics were considered in the SVE system design.

- Ongoing facility operations: The Site is currently operated by G&K as a commercial laundering facility. To reduce disruption to the Site's daily operations, SVE wells will be located between washers and / or dryers in the wash room area, as shown on **Figures 4 and 5**; branch lines from each SVE well will run horizontally beneath the ground to the nearest I-beam vertical support. The vertical SVE piping lines will connect to a horizontal header pipe train that runs overhead. The SVE system will be housed in a shed outside the main building. The SVE system layout is shown in **Figure 5**.
- Soils: Overburden soil below the building slab in the proposed SVE treatment area has been classified as saprolite overlying bedrock. SVE pilot testing performed by Geosyntec on 14 March 2015 revealed that these soils have a reasonable air-permeability and yield flow rates and a radius-of-influence (ROI) sufficient to support the design and operation of a full-scale SVE system.

3.2 Soil Vapor Extraction System

The targeted SVE capture zone has been selected as the suspected primary cVOC source area located beneath the wash floor operations in the main site building. The suspected source area location is shown on **Figure 3** along with analytical soil data collected as part of the 2015 source area investigation work.

The SVE system will extract soil gas from six wells screened in the unsaturated zone below the building slab. Extracted soil gas will pass through a knockout tank and the SVE blower system before being discharged to outdoor air. Pursuant to calculated cVOC mass estimates in this source area (see Section 6) and conversations with NCDEQ, it is assumed that off-gas treatment of the vapor stream with granular activated carbon (GAC) is not required.

The following subsections describe the proposed SVE design.

3.2.1 Basis of Design

The SVE system design is based on the following assumptions and considerations:

1) A capture footprint of approximately 2,000 ft^2 (**Figure 4**) which includes the assumed VOC source area beneath the wash floor operations. The vertical extent of VOC impacts to soil gas is expected to span the vadose zone which is from immediately below the building slab to the top of the water table located approximately 20 feet below the building slab.
2) SVE wells will be located in between washers and near the building columns to accommodate ongoing active laundering operations.
3) The SVE pilot test (**Appendix A**) demonstrated ROI values up to 11.3 feet around each SVE well at an applied vacuum of 132 inches of water. Using input data from the SVE pilot test, Geosyntec estimated an intrinsic permeability for source area vadose zone soil to be approximately 1.3 to 4.2 Darcy, with permeability decreasing with increased vacuum. This permeability is equivalent to a fine sand (C.W. Fetter, Applied Hydrogeology, 3rd Edition, 1994); however, based on the lithology documented on boring logs during source area investigation work, source area soils below the building slab are typically saprolite which is expected to produce intrinsic permeability values similar to a silty sand. Therefore, Geosyntec selected a conservative intrinsic permeability range of 0.3 to 3 Darcy to estimate flow rates from the extraction wells under anticipated conditions. Geosyntec anticipates the air flow rate from the extraction wells can be reasonably maintained at approximately 10 standard cubic feet per minute (scfm) and the applied vacuum to the extraction wells is

anticipated to be maintained at 100-inches of water or less to achieve an approximate ROI of 10 ft. Calculations are included in **Appendix B**.

4) A Roots 32 blower with a 5 horsepower (hp) motor (or equivalent) will be used which is capable of extracting approximately 60 cubic feet per minute (cfm) under about 109 inches of water vacuum at 2,000 RPM; this blower exceeds the anticipated design parameters for the SVE system. Manufacturer information pertaining to the blower is included in **Appendix C**.

The SVE system is expected to operate continuously until the VOC mass removal rate approaches asymptotic conditions, and vapor intrusion is mitigated or replaced with an alternate approach as described in Section 5.4.

3.2.2 Soil Vapor Extraction Well Installation

The SVE system design includes six proposed extraction wells (**Figures 4 and 5**). At each proposed location, a small direct-push drill rig (Geoprobe® or equivalent) with low overhead clearance requirements will drill to approximately 15 feet below the building slab with a 6.25" inside diameter rotary auger. Once the proposed depth is reached, the drill rig will remove the auger from the hole and the SVE well will be installed. Wells will be constructed from 2-inch diameter schedule 40 (SCH 40) polyvinyl chloride (PVC) pipe and 2-inch SCH 40 PVC 10-slot (0.010 inch) well screen. The length of screen and the screened interval will be determined during drilling such that the top of the screen is approximately 2.5 feet beneath the slab to allow for a filter pack, seal and patching of the slab as shown on drawings (**Figure 6**). The annular space between the SVE well and the borehole will be filled with #1 washed filter sand (or approved equal) from the bottom of the borehole to approximately 1 foot above the top of the screen. Approximately 0.5-feet of choker sand (i.e., #00 washed sand or similar) will be placed above the filter sand. Approximately 1 foot of bentonite slurry will be placed above the sand to prevent short-circuiting between the sand pack and granular soils that may exist beneath the slab. Finally, the slab around each SVE well will be repaired using hydraulic cement. SVE wells will terminate above the slab and connect to the SVE system via branch, riser, and header pipes as described below.

3.2.3 System Components

The proposed design includes the following system components.

- SVE wells as described in section 3.2.2
- Well head controls: The following components will be installed at or near each well head to regulate and measure flow:
    - Gate valve to control flow.
    - Vacuum gauge to measure the vacuum applied to the well.
    - Sample port to collect soil gas samples.
    - Pitot tube to measure air velocity.
- SVE wellheads will be connected to 2-inch SCH 40 PVC branch lines. Branch lines will connect to 4-inch SCH 40 PVC header pipes. Three branch lines will connect to each of two 4-inch header pipes. The 4-inch header pipes will then connect to a 6-inch header pipe which will convey the extracted soil vapor to the SVE system located in a shed outside of the building.
- Treatment System: The system includes a Roots 32 rotary positive displacement (PD) blower connected to a 5 hp motor. Based on the vacuum performance curves (**Appendix C**), the system is rated to produce a flow rate of up to 140 cubic feet per minute (cfm) and up to 217 inches of water (in w.c.; 16 inches mercury [Hg]) vacuum. The SVE blower will be located in a shed outside the southwestern corner of the building. A proposed piping and instrumentation diagram (P&ID) for the system is provided in **Figure 7**. The SVE blower system will have the following components:
    - 55-gallon knock-out tank to capture condensation from the soil gas.
    - 5 horsepower motor and Roots 32 rotary PD blower equipped with a variable frequency drive to provide efficient blower operation across a range of operating conditions.
    - Silencer and/or shed soundproofing to reduce noise emissions.
    - Dilution valve to allow the intake of ambient air in case the SVE wells produce significantly lower flow rates than expected or dilute VOCs in the vapor stream for discharge requirements.
    - Vacuum and pressure gauges.
    - Sample ports to monitor VOCs in the vapor stream.
    - Programmable logic controller (PLC) and telemetry with alarm capability.

- Pitot tube to measure air velocity.
- Vacuum switches.
- Differential pressure transmitter.

System components are shown on **Figures 6 and 7**. The SVE system will discharge directly to the atmosphere since emissions are expected to be below 5 tons/year (see Section 6).

4. CONSTRUCTION PLANS, SPECIFICATIONS, AND PROCEDURES

This section describes the SVE system construction plans, specifications and procedures. Additional design details are summarized in Section 3. Health and safety measures are discussed in Section 5.5.

4.1 Construction Plans

The construction plans and specifications for the SVE system are provided in **Figures 5 through 7**.

4.2 Utility Clearances

A North Carolina 811 utility locating ticket will be acquired prior to drilling operations at the Site. Slab penetration locations will be coordinated with facility personnel to confirm the absence of potential sub-slab utilities in the proposed locations. Final test locations may be moved relative to the locations shown in the Drawings based on the presence of potential utilities.

4.3 Monitoring Procedures During Construction

The monitoring activities described below will occur during the SVE system construction.

4.3.1 Well Installation

To minimize disruption to G&K's operations, wells will be installed over consecutive weekends. Installation of wells will be observed by Geosyntec field representatives. During the installation of these wells, air in the breathing zone will be screened for total VOCs using a photoionization detector (PID).

4.3.2 System Installation

The remedial systems will be installed by Geosyntec personnel and licensed contractors under Geosyntec's direction. The installation will involve the mobilization and installation of the SVE blower system, installation of piping in the building, installation of SVE wells, and connection of the SVE blower system to the SVE piping and wells. Once the system installation is complete, an engineer from Geosyntec will perform a

final inspection prior to system start-up. The inspection will confirm that the systems have been constructed in accordance with the specifications and engineering plans presented herein and with modifications approved by the design engineer, should any be required.

4.4 Implementation Schedule

The following table summarizes the estimated construction and implementation schedule.

Task	**Estimated Completion**
Site Preparation – utility and obstruction clearance	Within 1 month
Well and System Installation	Within 3 months
Engineer Inspection of Remediation Systems	Within 4 months
Completion Letter	Within 2 months after the SVE system is installed and operating
Status Reports to NCDEQ	Quarterly (to be included as part of the current quarterly email status updates)

4.5 Management of Remedial Waste

Soil cuttings generated during installation of the SVE wells will be containerized in 55-gallon steel drum(s) and shipped off-site under a waste manifest by a licensed waste hauler and disposed of at an authorized hazardous waste facility. Condensation from the vapor stream will be collected in the knock-out tank on the SVE system and disposed of off-site or as part of the facility's wastewater treatment pending waste characterization sampling data.

5. OPERATION, MAINTENANCE, AND MONITORING PLAN

Contact information for key personnel conducting the operation, maintenance, and monitoring (OMM) activities are provided in the table below.

Geosyntec Consultants Contacts	**Kaitlyn Rhonehouse, P.E.** Project Manager Engineer of Record Geosyntec Consultants 2501 Blue Ridge Road, Suite 430 Raleigh, NC 27607	Phone: 919-424-1833 Cell: 561-866-0057 Email: KRhonehouse@Geosyntec.com
G&K Contact	**Peter Moore** Principal Environmental Projects Engineer G&K Services, Inc. 5995 Opus Parkway Minnetonka, Minnesota 55343	Phone: 952-912-5547 Cell: 612-599-4940 Email: pmoore@gkservices.com

5.1 Start-up and Shut-down Procedures

Start-up activities will be conducted for the initial operation of the system or after the system has been shut down for three months or more. Start-up activities will consist of system inspection, observation of system operating parameters to confirm that flow rates, line vacuums and pressures are within the design criteria, and testing of fail-safe components such as high pressure alarms to verify proper operation. System alarms will also be tested quarterly to ensure proper functionality.

The system start-up procedure will be as follows:

1) Inspect all valves to confirm that they are in the appropriate position.
2) Verify that the call-out notifications are working properly.
3) Check the level of water in the knock-out tank.
4) Turn on blower.
5) Check vacuum and pressure gauges to ensure the system is within normal operating limits.

6) Check flow rate and vacuum at each SVE well. Adjust valves so that flow is distributed evenly among SVE wells (unless focused flow on particular wells is desired).
7) Complete the prescribed performance monitoring (see Section 5.2) after the system has been operating for approximately 1 hour.

If system shutdown is needed to perform system maintenance, the following procedure will be followed:

1) Turn off the blower.
2) Observe that the vacuum and pressure equilibrates to 0 psi in the system.
3) Shut off main power at the electrical panel and lock/tag the electrical panel.

5.2 Routine Maintenance and Monitoring Procedures

Operation and maintenance of the SVE system will include up to eight Site visits within the first year of operation to confirm that the system is operating in accordance with design criteria. Specifically, system checks will include the following:

- Visually assessing system components, piping, valves, and connections for obvious leaks or malfunctions.
- Recording vacuum and flow at the SVE well heads.
- Recording vacuum and flow on the header line.
- Measuring the total VOC concentration in system effluent using a photoionization detector (PID) and collecting an effluent air sample via Summa canister for analyses of cVOCs at a fixed-base laboratory using EPA Method TO-15.
- Measuring the total VOC concentration in soil gas drawn from each well using a PID.
- Checking for water in the knock-out tank. If the water level is greater than 50% of the knock-out tank capacity, then the knock-out tank will be emptied via a transfer pump to a 55-gallon drum and will disposed of off-site or as part of the facility's wastewater treatment pending waste characterization sampling data.
- Collection of pressure differential measurements to evaluate potential for vapor intrusion. Additionally, indoor air samples will be collected periodically to

evaluate indoor air concentrations inside the building. Grab samples will be collected via Summa canister during non-business hours (e.g., on a weekend day) to minimize indoor air sources of cVOCs in the sample. Collected samples will be analyzed at a fixed-base laboratory for cVOCs using EPA Method TO-15.

5.3 Monitoring Schedule

Routine monitoring (as described above in Section 5.2) will be performed after approximately one and four weeks following system start up. Routine monitoring will then transition to Site visits approximately every eight weeks.

5.4 SVE Termination Criteria

The SVE system will be shut down once mass removal rates approach an asymptote and operation of the SVE system is no longer needed to mitigate VI in the building (based on the results of indoor air sampling). Given that the system is expected to operate at a relatively constant flow rate, asymptotic mass removal can be assessed by comparing effluent VOC concentrations from the system over time. For example, asymptotic mass removal may be defined as the point where the change in concentration observed over a three month period is 10% of the change in concentration observed during the first week of SVE operation. A formula to calculate this termination criterion is provided below.

$$R = [(C_a - C_b)/\Delta t_{a,b}] \,/\, [(C_o - C_{+1})/\Delta t_1]$$

Where:

- R is the relative change in concentration between times a and b compared to the change in concentrations during the first week of operation.
- C is total VOC concentration in air extracted by the SVE system (measured by a PID).
- a and b are times three months apart.
- C_o is the concentration in air extracted by the SVE system at start-up.
- C_{+1} is the concentration in air extracted by the SVE system one week after start-up.
- Δt is a change in time such as three months ($\Delta t_{a,b}$) or one week (Δt_1)

Figures based on hypothetical performance data are provided below to illustrate the termination criteria. For the hypothetical data shown on the figures below, SVE operation would cease after about 11 months.

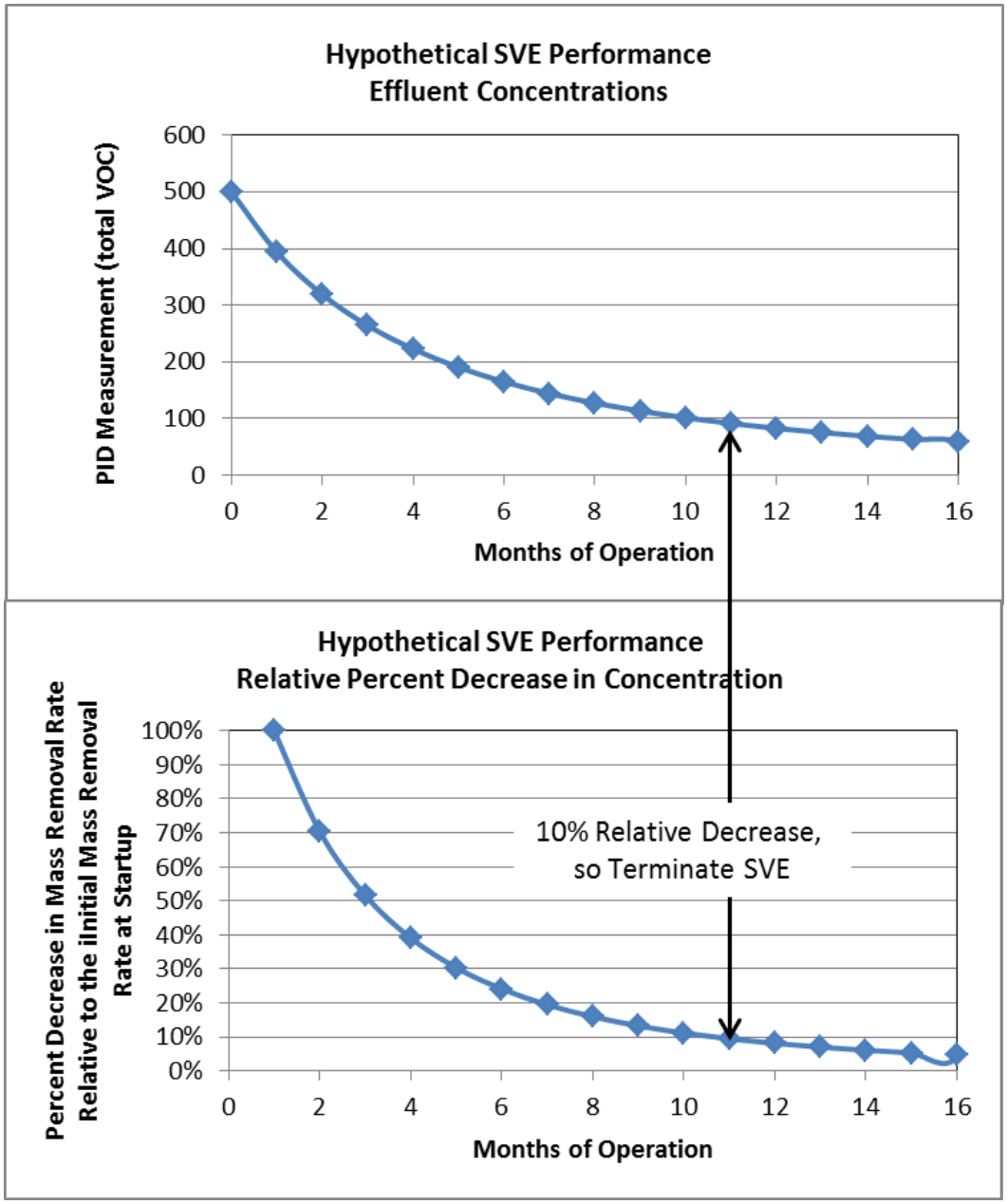

5.5 Health and Safety Plan

A Site-specific Health and Safety Plan (HASP) has been developed for this Site to protect workers during monitoring and remediation activities. The HASP was developed in accordance with the Hazard Communication Standard of the Occupational Safety and Health Administration (OSHA) presented in 29 CFR 1910.1200. For this scope of work, a Task Hazard Analysis (THA) has been created to address the tasks necessary to successfully complete implementation, operation, and monitoring of the SVE system. The THA fulfills requirements of 29 CFR 1910.1200 and is intended to serve as a Health and Safety Plan (HASP) for SVE activities; other Site work will occur under the Site-wide HASP.

Specific health and safety considerations incorporated into the THA include potential exposure to elevated concentrations of chlorinated VOC vapors during well installations, potential direct contact and/or incidental ingestion exposure to contaminated soil during installation of wells, potential exposure to VOC vapors during operation of the SVE system, and physical hazards related to mechanical devices. Appropriate administrative, engineering, and PPE controls are presented in the THA to address these considerations.

6. REQUIRED PERMITS AND APPROVALS

No federal or state air permits are required to complete the SVE system implementation and operation at the Site. Pursuant to 15A NCAC, 2Q.0102 (E)(i), a source of air emissions can be exempt from permitting if the potential emissions of volatile organic compounds (VOCs) are less than 5 tons per year (tpy) and the potential emission of hazardous air pollutants (HAPs) would be below their lesser quantity cutoff (a copy of the NCAC Subchapter 2Q Air Quality Permit Procedures Rules and G&K's existing air permit is included in **Appendix D**). Based on soil data collected from the proposed SVE capture zone (**Figure 3**), the mass of total VOCs in the source area was estimated to be approximately 6,600 pounds, or 3.3 tons. Therefore, the mass of VOC emissions for the SVE system cannot exceed the listed threshold of 5 tpy. **Appendix E** provides the calculated VOC mass located in the source area. Data to calculate emissions will be collected during start-up (see section 5.1); these data will be used to confirm emissions do not exceed regulatory thresholds.

Local building and/or electrical permits may be required to install SVE system components. The installation contractor will acquire the required permits.

7. REPORTING

A summary of activities completed during construction and associated start-up data results for the SVE system will be provided in a Construction Completion Report to NCDEQ. Subsequent OMM results will be included in the quarterly status update emails for the Site which are currently submitted to NCDEQ.

8. REFERENCES

Geosyntec. 2013. Site Status Report, Former Rental Towel Uniform/National Services Industries Site, 610 Woody Drive, Alamance County, Graham, North Carolina IHSB# NONCD0001655

Geosyntec. 2015. Interim Remedial Assessment Report, Former Rental Towel Uniform/National Services Industries Site, 610 Woody Drive, Alamance County, Graham, North Carolina IHSB# NONCD0001655

Geosyntec. 2015. Source Area Investigation Work Plan, Former Rental Towel Uniform/National Services Industries Site, 610 Woody Drive, Alamance County, Graham, North Carolina IHSB# NONCD0001655

FIGURES

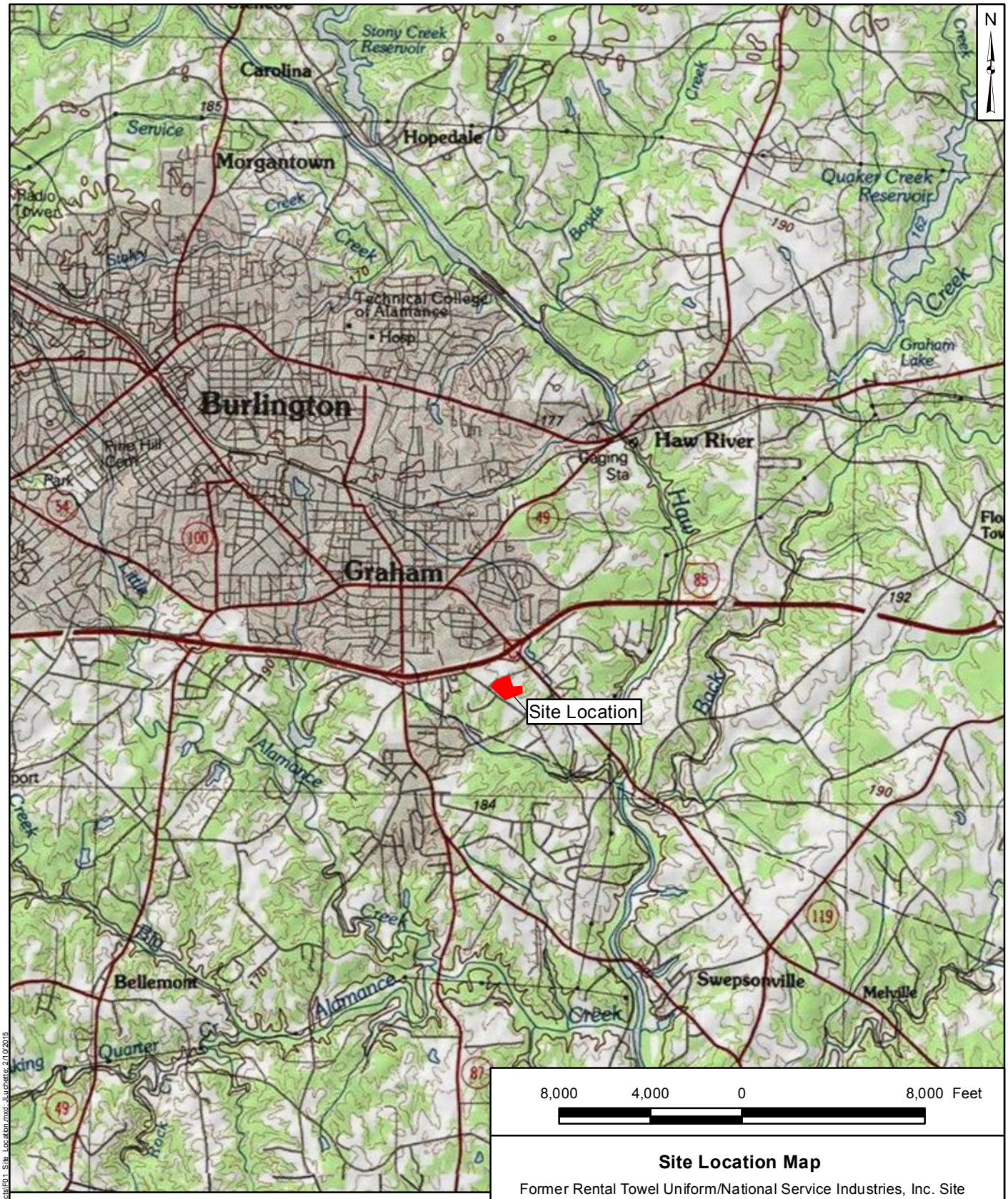

Legend

Approximate Former RTUS/NSI Property Location

Source: December 2009 Topographic Map courtesy of National Geographic Society.

Site Location Map

Former Rental Towel Uniform/National Service Industries, Inc. Site
610 Woody Dr.
Graham, North Carolina

Geosyntec consultants

Charlotte, North Carolina | February 2015

Figure 1

C:\GIS_Local\GIS\Projects_Local\G&K Graham\Projects\F01_Site_Location.mxd; JLuchette; 2/10/2015

Legend

- Property Boundary
- Suspected Source Area

Notes:
1. Property Boundary provided by Alamance County, alamancecounty.connectgis.com, accessed: April 15, 2013.
2. 2011 World Imagery - Source: Esri, DigitalGlobe, GeoEye, i-cubed, USDA, USGS, AEX, Getmapping, Aerogrid, IGN, IGP, swisstopo, and the GIS User Community.

400 200 0 400 Feet

Site and Surrounding Area Map

Former Rental Towel Uniform/National Service Industries, Inc. Site
610 Woody Dr.
Graham, North Carolina

Geosyntec Consultants of NC, PC
NC License No.: C-3500

Raleigh, North Carolina | September 2016

Figure 2

\\Raleigh-01\PRJ\N:\G&K\Graham\GIS\mxd\Source Area SVE Work Plan\F2_siteifeatures.mxd 26 September 2016 mlemy

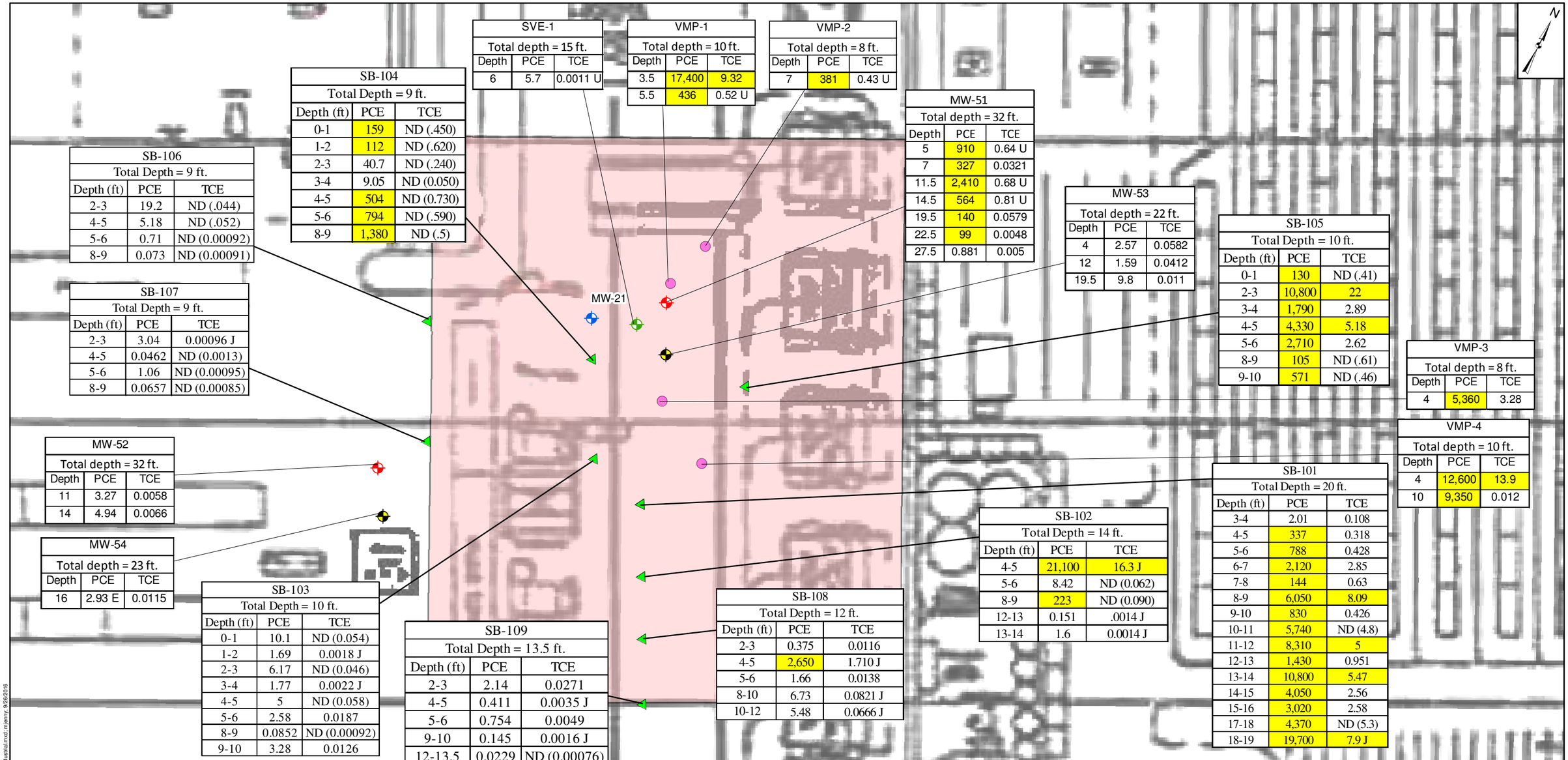

SVE-1		
Total depth = 15 ft.		
Depth	PCE	TCE
6	5.7	0.0011 U

VMP-1		
Total depth = 10 ft.		
Depth	PCE	TCE
3.5	17,400	9.32
5.5	436	0.52 U

VMP-2		
Total depth = 8 ft.		
Depth	PCE	TCE
7	381	0.43 U

SB-104		
Total Depth = 9 ft.		
Depth (ft)	PCE	TCE
0-1	159	ND (.450)
1-2	112	ND (.620)
2-3	40.7	ND (.240)
3-4	9.05	ND (0.050)
4-5	504	ND (0.730)
5-6	794	ND (.590)
8-9	1,380	ND (.5)

SB-106		
Total Depth = 9 ft.		
Depth (ft)	PCE	TCE
2-3	19.2	ND (.044)
4-5	5.18	ND (.052)
5-6	0.71	ND (0.00092)
8-9	0.073	ND (0.00091)

SB-107		
Total Depth = 9 ft.		
Depth (ft)	PCE	TCE
2-3	3.04	0.00096 J
4-5	0.0462	ND (0.0013)
5-6	1.06	ND (0.00095)
8-9	0.0657	ND (0.00085)

MW-51		
Total depth = 32 ft.		
Depth	PCE	TCE
5	910	0.64 U
7	327	0.0321
11.5	2,410	0.68 U
14.5	564	0.81 U
19.5	140	0.0579
22.5	99	0.0048
27.5	0.881	0.005

MW-53		
Total depth = 22 ft.		
Depth	PCE	TCE
4	2.57	0.0582
12	1.59	0.0412
19.5	9.8	0.011

SB-105		
Total Depth = 10 ft.		
Depth (ft)	PCE	TCE
0-1	130	ND (.41)
2-3	10,800	22
3-4	1,790	2.89
4-5	4,330	5.18
5-6	2,710	2.62
8-9	105	ND (.61)
9-10	571	ND (.46)

VMP-3		
Total depth = 8 ft.		
Depth	PCE	TCE
4	5,360	3.28

VMP-4		
Total depth = 10 ft.		
Depth	PCE	TCE
4	12,600	13.9
10	9,350	0.012

MW-52		
Total depth = 32 ft.		
Depth	PCE	TCE
11	3.27	0.0058
14	4.94	0.0066

MW-54		
Total depth = 23 ft.		
Depth	PCE	TCE
16	2.93 E	0.0115

SB-101		
Total Depth = 20 ft.		
Depth (ft)	PCE	TCE
3-4	2.01	0.108
4-5	337	0.318
5-6	788	0.428
6-7	2,120	2.85
7-8	144	0.63
8-9	6,050	8.09
9-10	830	0.426
10-11	5,740	ND (4.8)
11-12	8,310	5
12-13	1,430	0.951
13-14	10,800	5.47
14-15	4,050	2.56
15-16	3,020	2.58
17-18	4,370	ND (5.3)
18-19	19,700	7.9 J

SB-102		
Total Depth = 14 ft.		
Depth (ft)	PCE	TCE
4-5	21,100	16.3 J
5-6	8.42	ND (0.062)
8-9	223	ND (0.090)
12-13	0.151	.0014 J
13-14	1.6	0.0014 J

SB-103		
Total Depth = 10 ft.		
Depth (ft)	PCE	TCE
0-1	10.1	ND (0.054)
1-2	1.69	0.0018 J
2-3	6.17	ND (0.046)
3-4	1.77	0.0022 J
4-5	5	ND (0.058)
5-6	2.58	0.0187
8-9	0.0852	ND (0.00092)
9-10	3.28	0.0126

SB-109		
Total Depth = 13.5 ft.		
Depth (ft)	PCE	TCE
2-3	2.14	0.0271
4-5	0.411	0.0035 J
5-6	0.754	0.0049
9-10	0.145	0.0016 J
12-13.5	0.0229	ND (0.00076)

SB-108		
Total Depth = 12 ft.		
Depth (ft)	PCE	TCE
2-3	0.375	0.0116
4-5	2,650	1.710 J
5-6	1.66	0.0138
8-10	6.73	0.0821 J
10-12	5.48	0.0666 J

Legend

- Suspected Source Area
- Soil Boring
- Pre-Existing Monitoring Well (MW)
- Soil Vapor Extraction Pilot Test Well
- Soil Vapor Extraction Pilot Test Vacuum Monitoring Point
- Saturated Saprolite (Shallow) Boring/Well As-Built Location
- Partially Weathered Rock (Deep) Boring/Well As-Built Location

Screening Criteria (mg/kg)	
Industrial PSRGs	
PCE	78
TCE	3.8

Notes:
1. VMP indicates vacuum monitoring point.
2. PCE indicates tetrachloroethene.
3. TCE indicates trichloroethene.
4. All concentrations are reported in milligram per kilogram (mg/kg).
5. All depths are in feet below ground surface.
6. Where duplicates were collected, the higher of the two results is reported.
7. PSRG indicates NCDENR's Preliminary Soil Remediation Goals.
8. J indicates an estimated result.
9. E indicates value exceeds calibration range.
10. U and / or ND indicates analyte was not detected above the method detection limit.
11. Yellow shading indicates exceedance of the Industrial PSRG.
12. Samples were collected during February and March 2015.

10 5 0 10 Feet

Source Area Investigation - Soil Results
Industrial PCE and TCE Exceedances
Former Rental Towel Uniform/National Service Industries, Inc. Site
610 Woody Dr.
Graham, North Carolina

Geosyntec Consultants of NC, PC
NC License No.: C-3500

Raleigh, North Carolina | September 2016

Figure 3

N:\GsK\Graham\GIS\mxd\Source Area SVE Work Plan\F3_Source Area Soil Exceedances - Industrial.mxd; mjenny; 9/26/2016

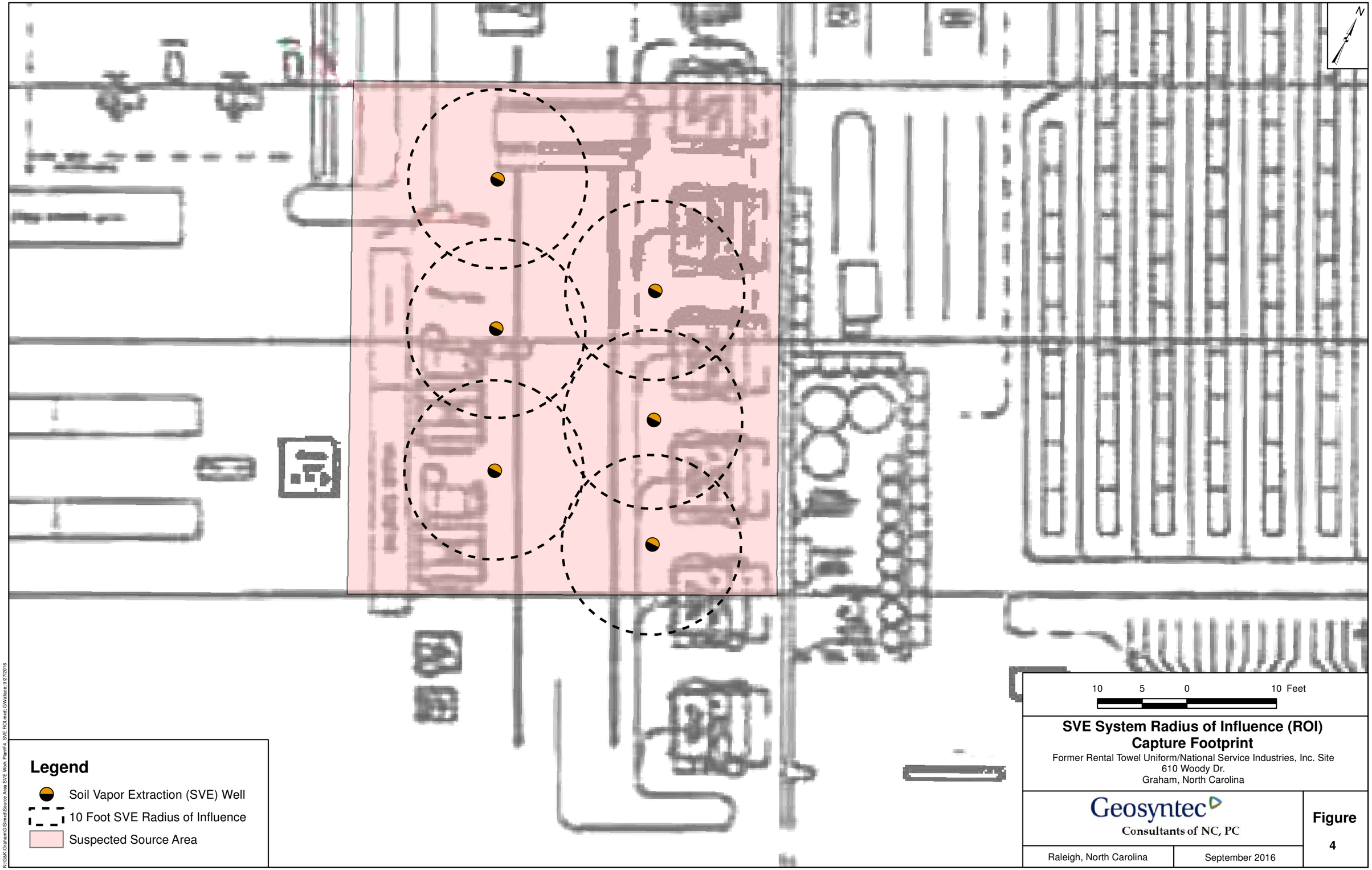

SVE System Radius of Influence (ROI)
Capture Footprint

Former Rental Towel Uniform/National Service Industries, Inc. Site
610 Woody Dr.
Graham, North Carolina

Geosyntec Consultants of NC, PC

Raleigh, North Carolina | September 2016

Figure 4

N:\G&K\Graham\GIS\mxd\Source Area SVE Work Plan\F4_SVE ROI.mxd: GWallace 9/27/2016

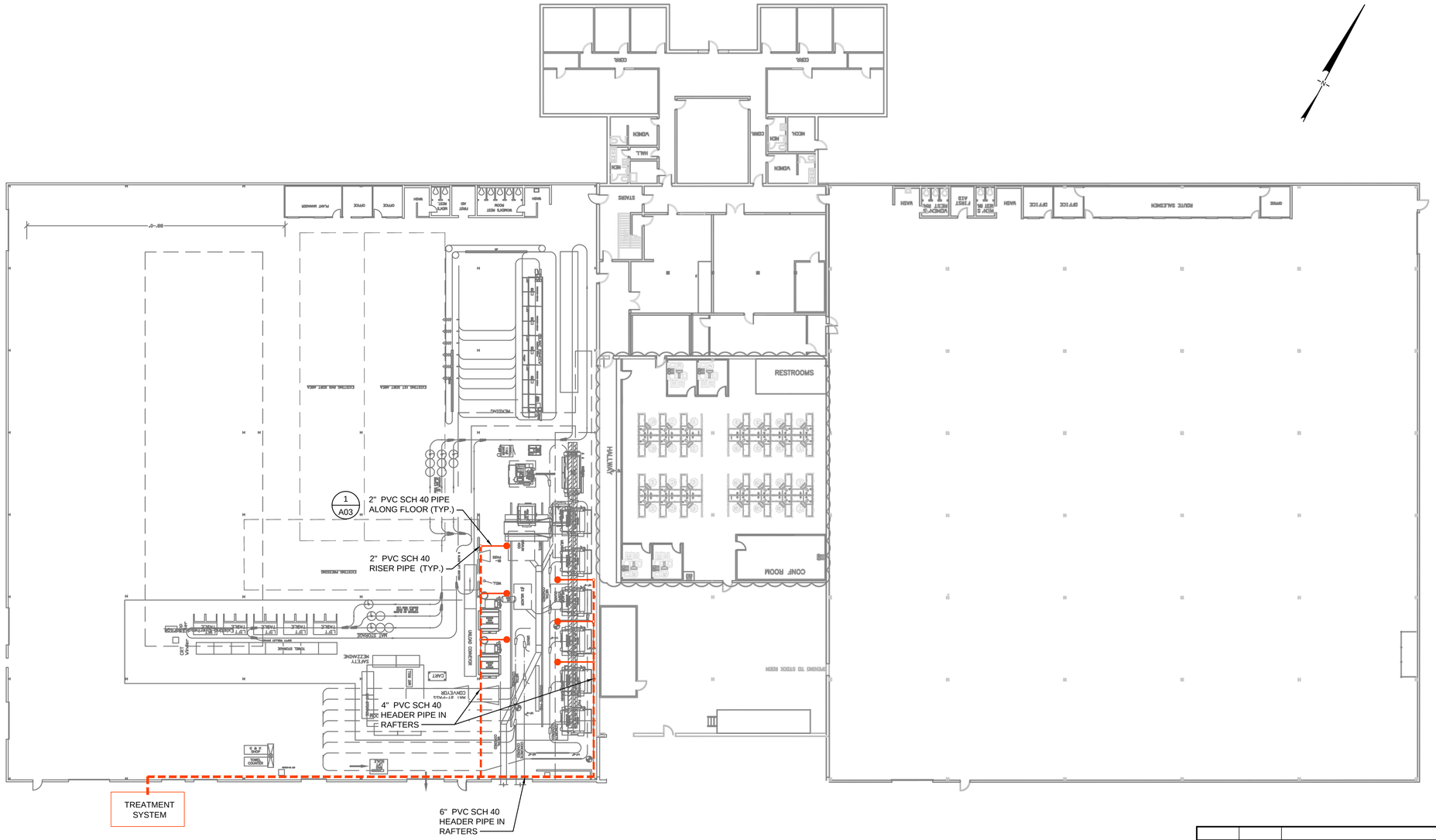

LEGEND

● PROPOSED SOIL VAPOR EXTRACTION WELL

0 20' 40'

SCALE IN FEET
(SEE NOTE 1)

NOTE

1. BUILDING BASE MAP IS A COMPOSITE OF AN AUTOCAD FILE AND A PDF FILE RECEIVED FROM THE G & K SERVICES. THE AUTOCAD FILE APPEARS TO BE TO SCALE AND THE PDF FILE WAS ROTATED AND SCALED TO MATCH. ACTUAL SCALE MAY NEED TO BE CONFIRMED PRIOR TO THE PREPARATION OF DESIGN PLANS.

2. ALL LOCATIONS ARE APPROXIMATE.

(1in) (2in) (3in) (4in)

SCALE IS BASED ON 22" X 34" NON-REDUCED SHEET SIZE (BORDER = 21" X 32")

REV	DATE	DESCRIPTION	DRN	APP

Geosyntec consultants

TITLE: SOIL VAPOR EXTRACTION SYSTEM LAYOUT

PROJECT: FORMER RENTAL TOWEL UNIFORM / NATIONAL SERVICES, INC. SITE

SITE: 610 WOODY DR., GRAHAM, NORTH CAROLINA

THIS DRAWING MAY NOT BE ISSUED FOR PROJECT TENDER OR CONSTRUCTION, UNLESS SEALED.

SIGNATURE

DATE

DATE

DESIGN BY:	CAA	DATE:	SEPTEMBER 2016
DRAWN BY:	RMK	PROJECT NO.:	GN5616
CHECKED BY:	CAA	FILE:	
REVIEWED BY:		DRAWING NO.:	
APPROVED BY:			5 OF 7

T:\Projects_CADD\GG&K SERVICES INC\GRAHAM NC BLDG - GN5616\DRAWINGS\GN5616 A01 (PLAN).dwg Last Edited By:RKOHLSTROM

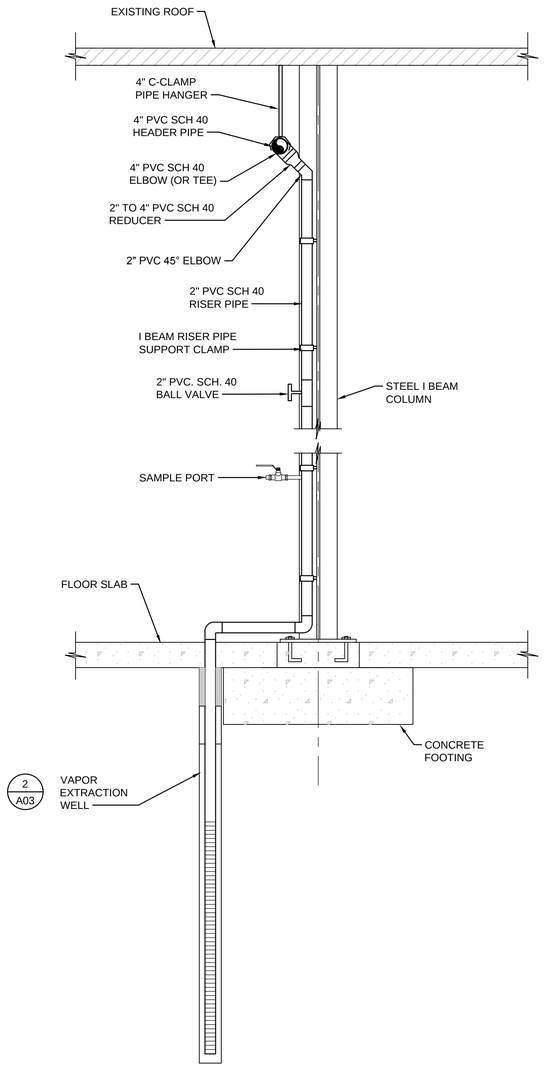

1 A01 DETAIL
WELL HEAD RISER PIPING
SCALE: N.T.S.

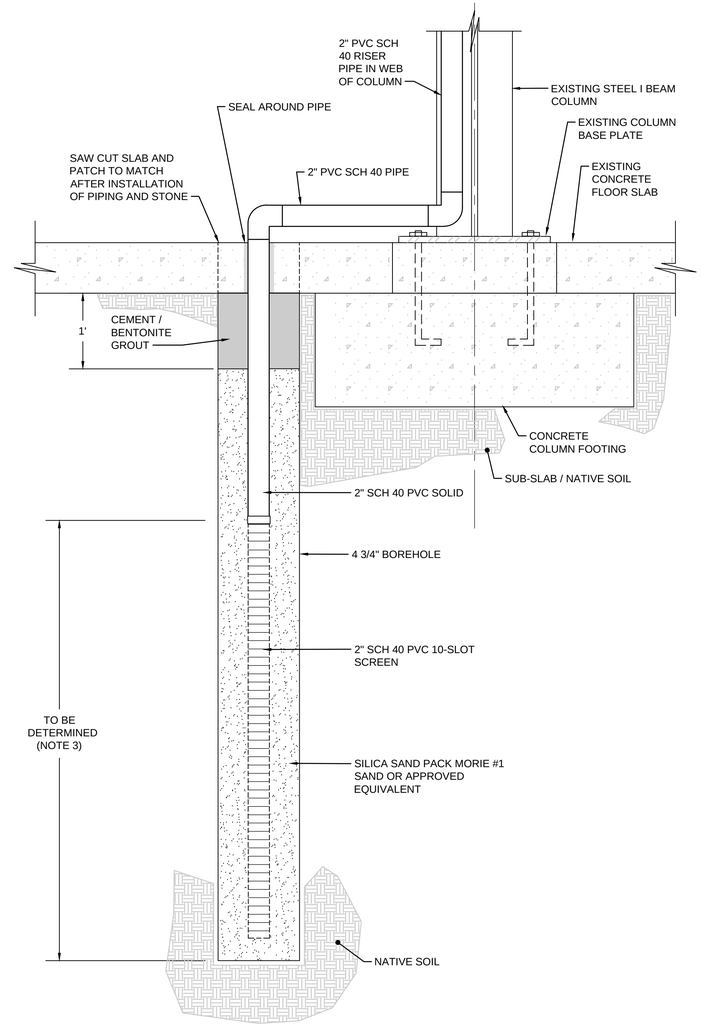

2 A03 DETAIL
VAPOR EXTRACTION WELL
SCALE: N.T.S.

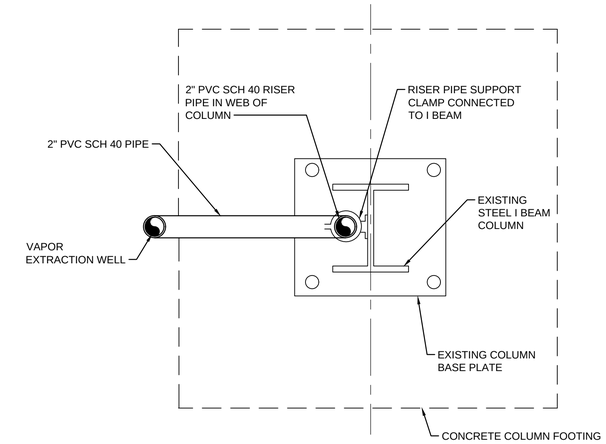

3 A03 DETAIL
OVERHEAD VIEW - PIPE INSIDE I BEAM
SCALE: N.T.S.

NOTES:

1. A PLACARD WILL BE POSTED ON THE COLUMN ADJACENT TO EACH VAPOR EXTRACTION POINT WITH A CONTACT NAME AND PHONE NUMBER FOR REPORTING SYSTEM PROBLEMS.
2. SVE WELLS WILL BE SCREENED FROM THE BOTTOM OF THE WELL TO ~5 FEET BELOW THE SLAB.
3. UNLESS NOTED, ALL PIPE AND FITTINGS WILL BE SOLVENT WELDED SCHEDULE 40 PVC.
4. SYSTEM MODIFICATIONS AND EQUIPMENT SPECIFICATIONS MAY BE MADE WITH THE APPROVAL OF THE DESIGN ENGINEER.
5. ALL BUILDING COMPONENTS ARE SCHEMATIC AND ARE NOT BASED ON ACTUAL SIZES OR SHAPES.
6. ALL LOCATIONS ARE APPROXIMATE.

REV	DATE	DESCRIPTION	DRN	APP

Geosyntec consultants

TITLE: SOIL VAPOR EXTRACTION SYSTEM DETAILS

PROJECT: FORMER RENTAL TOWEL UNIFORM / NATIONAL SERVICES, INC. SITE

SITE: 610 WOODY DR., GRAHAM, NORTH CAROLINA

THIS DRAWING MAY NOT BE ISSUED FOR PROJECT TENDER OR CONSTRUCTION, UNLESS SEALED.

SIGNATURE

DATE

DESIGN BY:	CAA	DATE:	SEPTEMBER 2016
DRAWN BY:	RMK	PROJECT NO.:	GN5616
CHECKED BY:	CAA	FILE:	
REVIEWED BY:		DRAWING NO.:	6 OF 7
APPROVED BY:			

(3in) (2in) (1in) (1in) (2in) (3in) (4in)

SCALE IS BASED ON 22" X 34" NON-REDUCED SHEET SIZE (BORDER = 21" X 32")

T:\Projects_CADD\G\G&K SERVICES INC\GRAHAM NC BLDG - GN5616\DRAWINGS\GN5616 A03 (DETAILS).dwg Last Edited By:RKOHLSTROM

NOTES:

1. CONFIGURATION MAY BE ADJUSTED BASED ON SPACE
2. SVE SYSTEM MAY BE LOCATED INSIDE A SOUND ENCLOSURE OR OUTSIDE OF THE PLANT BUILDING IF TOO LOUD
3. PLC LOGIC
   PZ ON/OFF AT HH/LL
   SYSTEM SHUTDOWN AT HH OR HIGH PRESSURE ON PRESSURE SWITCH AND WILL ISSUE AN ALARM UPON SHUTDOWN
4. SYSTEM MODIFICATIONS OR EQUIPMENT CHANGES MAY BE MADE WITH THE APPROVAL OF THE DESIGN ENGINEER.

LEGEND:

- GATE VALVE
- GLOBE VALVE
- SAMPLE PORT
- PRESSURE (PG) OR VACCUM (VG) GAUGE
- FLOW METER (PIT0T TUBE)
- PRESSURE SWITCH (HIGH)
- DIFFERENTIAL PRESSURE TRANSMITTER
- TOTALIZER

P1	T1	P2	GAC1
ROOTS PD BLOWER (5 HP)	55 GALLON KNOCKOUT TANK	OPTIONAL CONDENSATE SUMP PUMP 120V, LEVEL CONTROLLED	OPTIONAL GRANULAR ACTIVATED CARBON DRUM 55 GALLON, STEEL

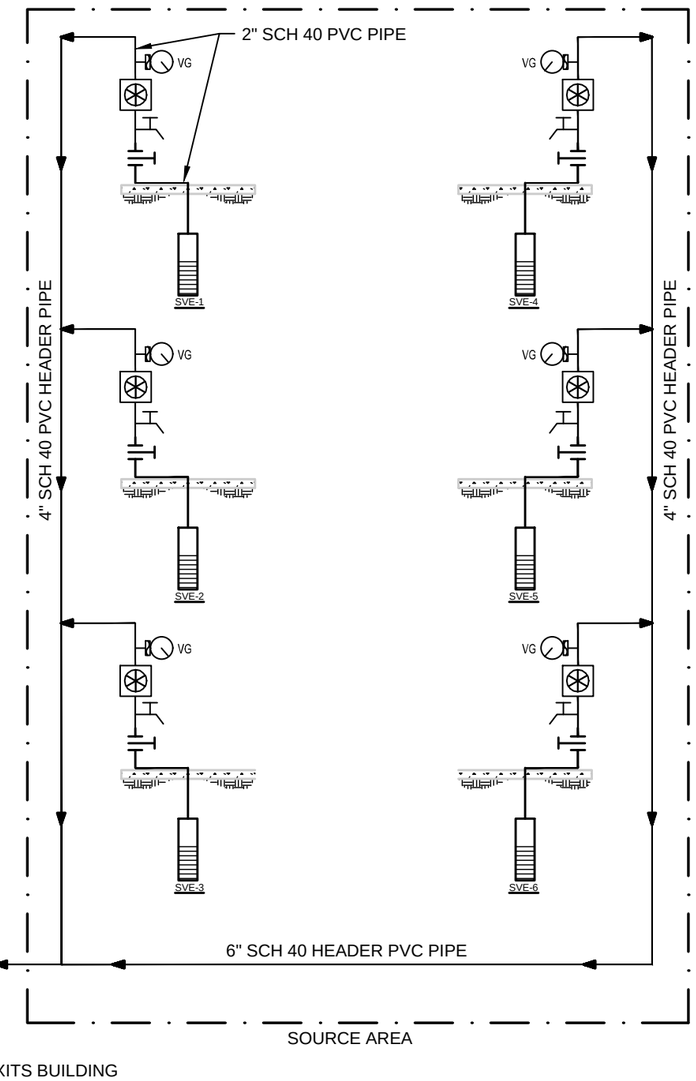

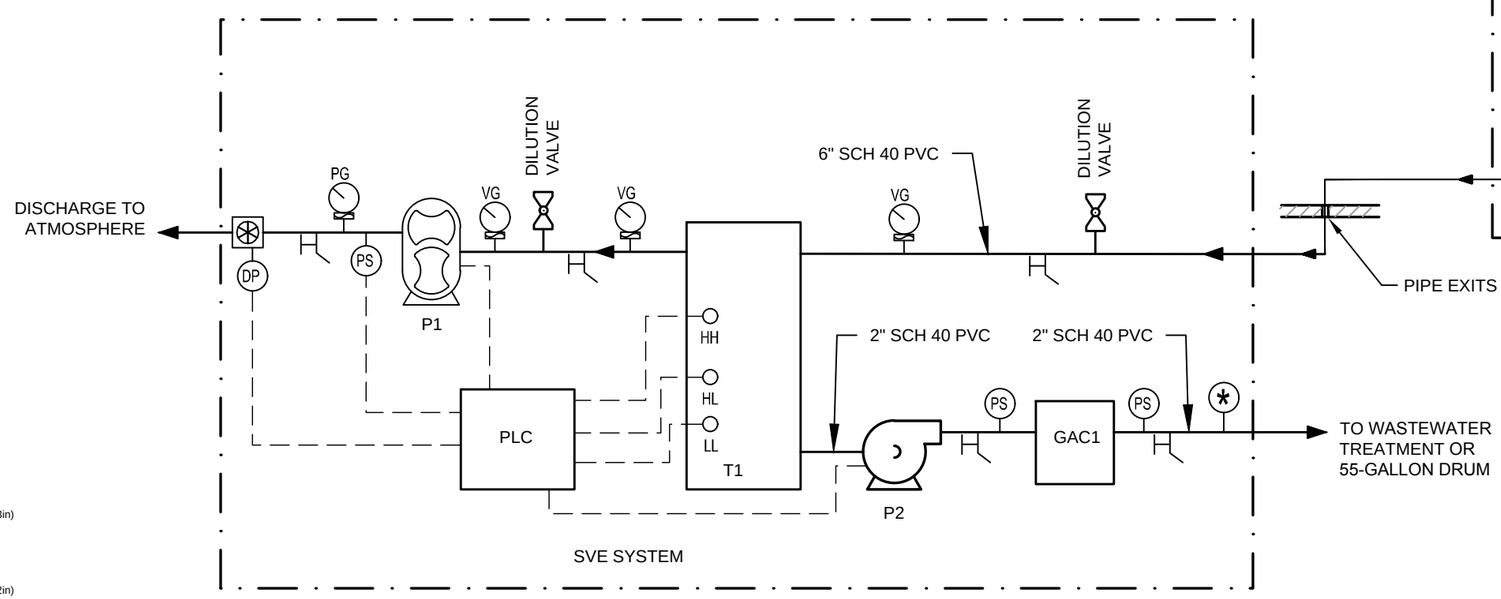

REV	DATE	DESCRIPTION	DRN	APP

Geosyntec consultants

TITLE: SOIL VAPOR EXTRACTION SYSTEM PROCESS INSTRUMENTATION DIAGRAM

PROJECT: FORMER RENTAL TOWEL UNIFORM / NATIONAL SERVICES, INC. SITE

SITE: 610 WOODY DR., GRAHAM, NORTH CAROLINA

THIS DRAWING MAY NOT BE ISSUED FOR PROJECT TENDER OR CONSTRUCTION, UNLESS SEALED.

SIGNATURE

DATE

DESIGN BY:	CAA	DATE:	SEPTEMBER 2016
DRAWN BY:	RMK	PROJECT NO.:	GN5616
CHECKED BY:	CAA	FILE:	
REVIEWED BY:		DRAWING NO.:	7 OF 7
APPROVED BY:			

SCALE IS BASED ON 22" X 34" NON-REDUCED SHEET SIZE (BORDER = 21" X 32")

T:\Projects_CADD\G\G&K SERVICES INC\GRAHAM NC BLDG - GN5616\DRAWINGS\GN5616 A02 (PROCESS FLOW).dwg Last Edited By:RKOHLSTROM

APPENDIX A

SVE Pilot Test Radius of Influence Calculations

Radius of influence (ROI) vacuum = 0.1 in-H_2O

Location ID	Distance from SVE-1 [ft]	Vacuum pressure [in-Hg]	Vacuum pressure [in-H_2O]	log(Vacuum pressure) [in-H_2O]
SVE-1	0.08	--	41	1.61
VMP-1	5	--	2.25	0.35
VMP-2	10	--	0.01	-2.00
VMP-3	8	--	0.225	-0.65
VMP-4	16	--	0.00	--

	Slope	Intercept	R^2	ROI [ft]	ROI Line	
Linear	-2.3178	26.8142	0.5730	11.53	8.16	2.50
Log	-0.3467	1.8302	0.9545	8.16	8.16	-2.50

Location ID	Distance from SVE-1 [ft]	Vacuum pressure [in-Hg]	Vacuum pressure [in-H_2O]	log(Vacuum pressure) [in-H_2O]
SVE-1	0.08	--	62	1.79
VMP-1	5	--	3.05	0.48
VMP-2	10	--	0.015	-1.82
VMP-3	8	--	0.31	-0.51
VMP-4	16	--	0.01	-2.00

	Slope	Intercept	R^2	ROI [ft]	ROI Line	
Linear	-3.4973	40.4139	0.5691	11.53	10.12	2.50
Log	-0.2557	1.5873	0.8951	10.12	10.12	-2.50

Location ID	Distance from SVE-1 [ft]	Vacuum pressure [in-Hg]	Vacuum pressure [in-H_2O]	log(Vacuum pressure) [in-H_2O]
SVE-1	0.08	7.5	102	2.01
VMP-1	5	--	4.7	0.67
VMP-2	10	--	0.02	-1.70
VMP-3	8	--	0.5	-0.30
VMP-4	16	--	0.01	-2.00

	Slope	Intercept	R^2	ROI [ft]	ROI Line	
Linear	-5.7430	66.3203	0.5671	11.53	10.55	2.50
Log	-0.2692	1.8403	0.9097	10.55	10.55	-2.50

Location ID	Distance from SVE-1 [ft]	Vacuum pressure [in-Hg]	Vacuum pressure [in-H_2O]	log(Vacuum pressure) [in-H_2O]
SVE-1	0.08	9.75	132	2.12
VMP-1	5	--	6	0.78
VMP-2	10	--	0.03	-1.52
VMP-3	8	--	0.63	-0.20
VMP-4	16	--	0.02	-1.70

	Slope	Intercept	R^2	ROI [ft]	ROI Line	
Linear	-7.4632	86.1717	0.5665	11.53	11.30	2.50
Log	-0.2571	1.9053	0.8953	11.30	11.30	-2.50

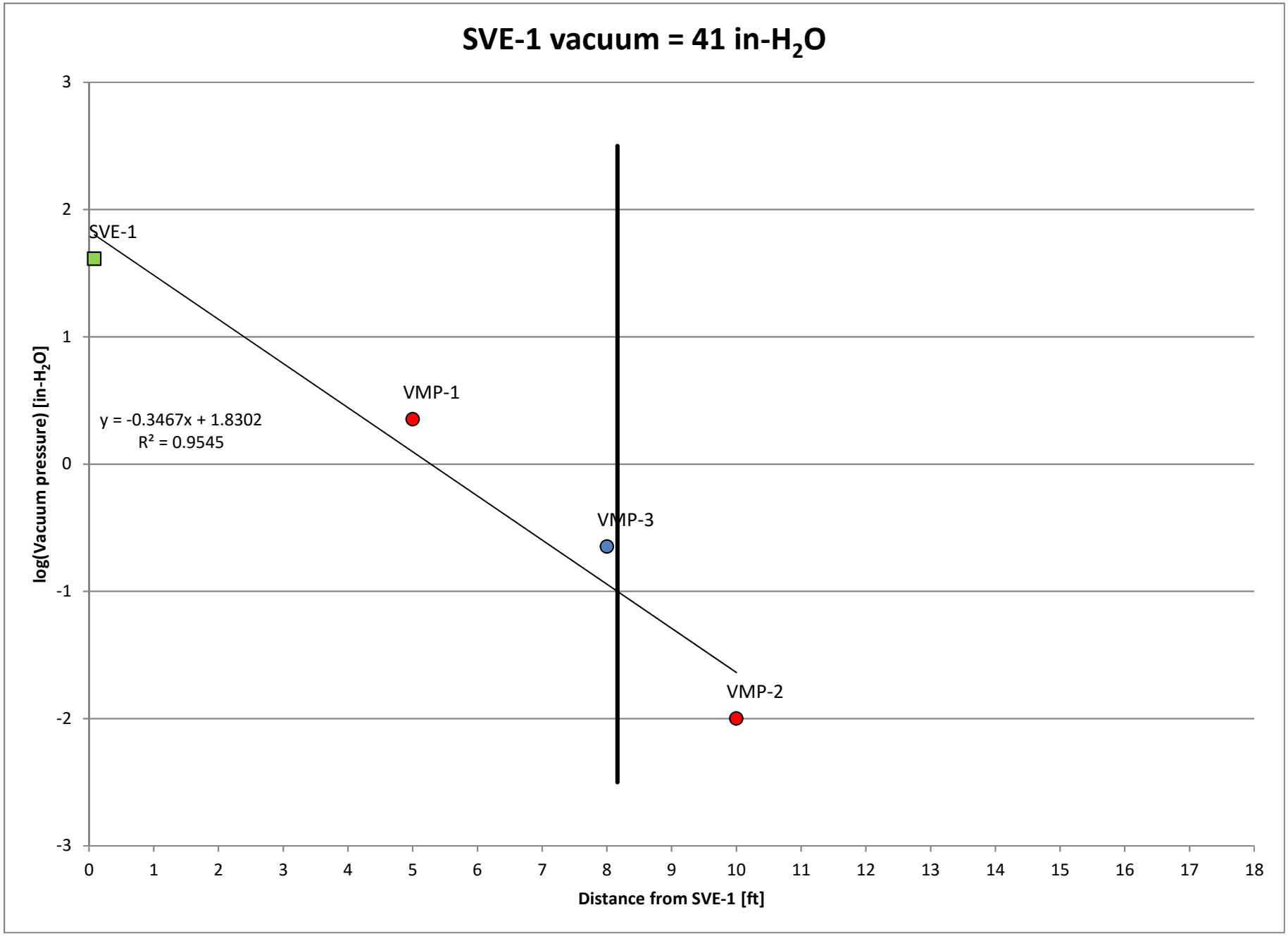
SVE-1 vacuum = 41 in-H2O
log(Vacuum pressure) [in-H2O]
Distance from SVE-1 [ft]
SVE-1
VMP-1
VMP-3
VMP-2
y = -0.3467x + 1.8302
R² = 0.9545
3
2
1
0
-1
-2
-3
0
1
2
3
4
5
6
7
8
9
10
11
12
13
14
15
16
17
18

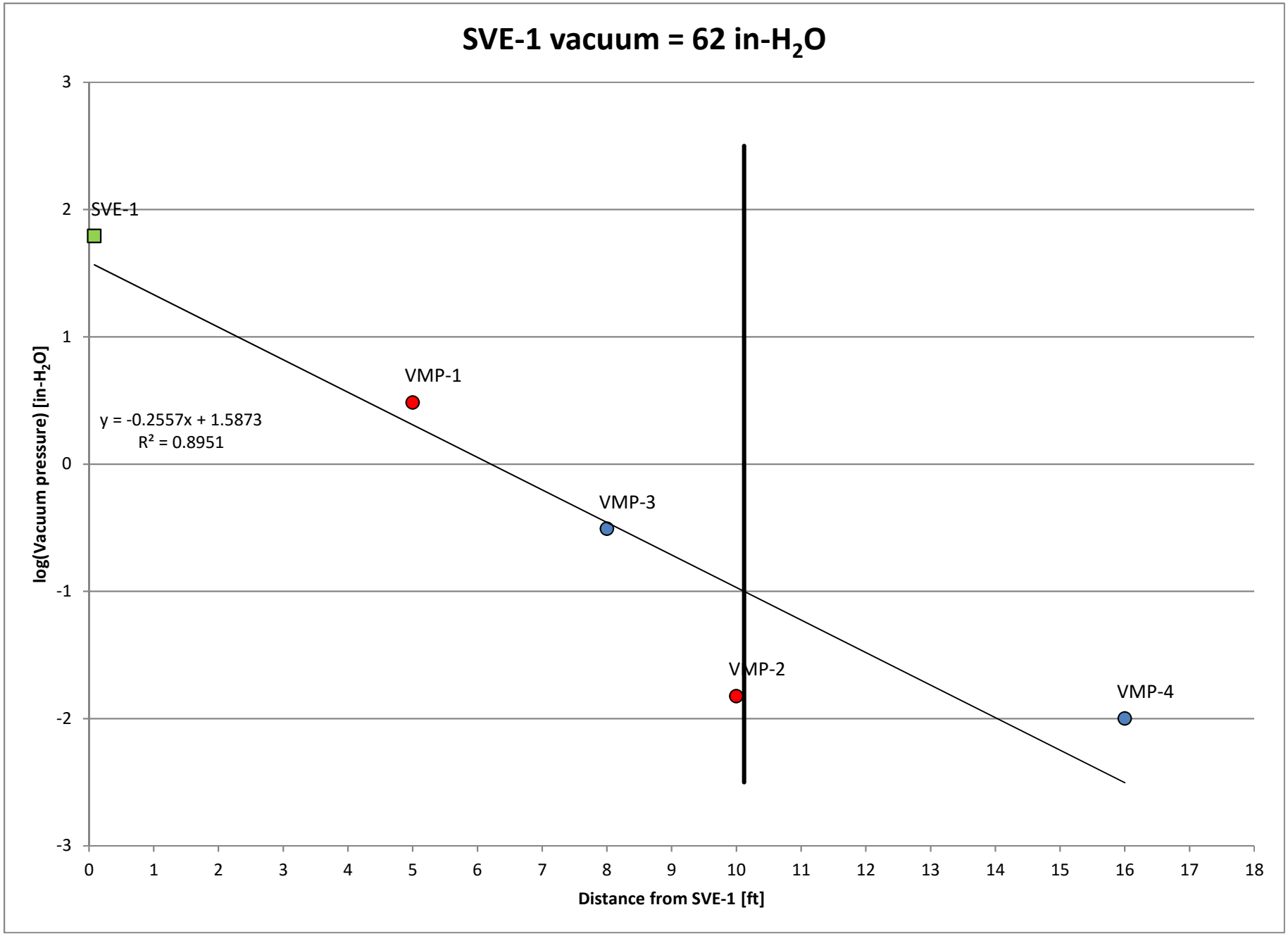
SVE-1 vacuum = 62 in-H2O
log(Vacuum pressure) [in-H2O]
Distance from SVE-1 [ft]
SVE-1
VMP-1
VMP-3
VMP-2
VMP-4
y = -0.2557x + 1.5873
R² = 0.8951
3
2
1
0
-1
-2
-3
0
1
2
3
4
5
6
7
8
9
10
11
12
13
14
15
16
17
18

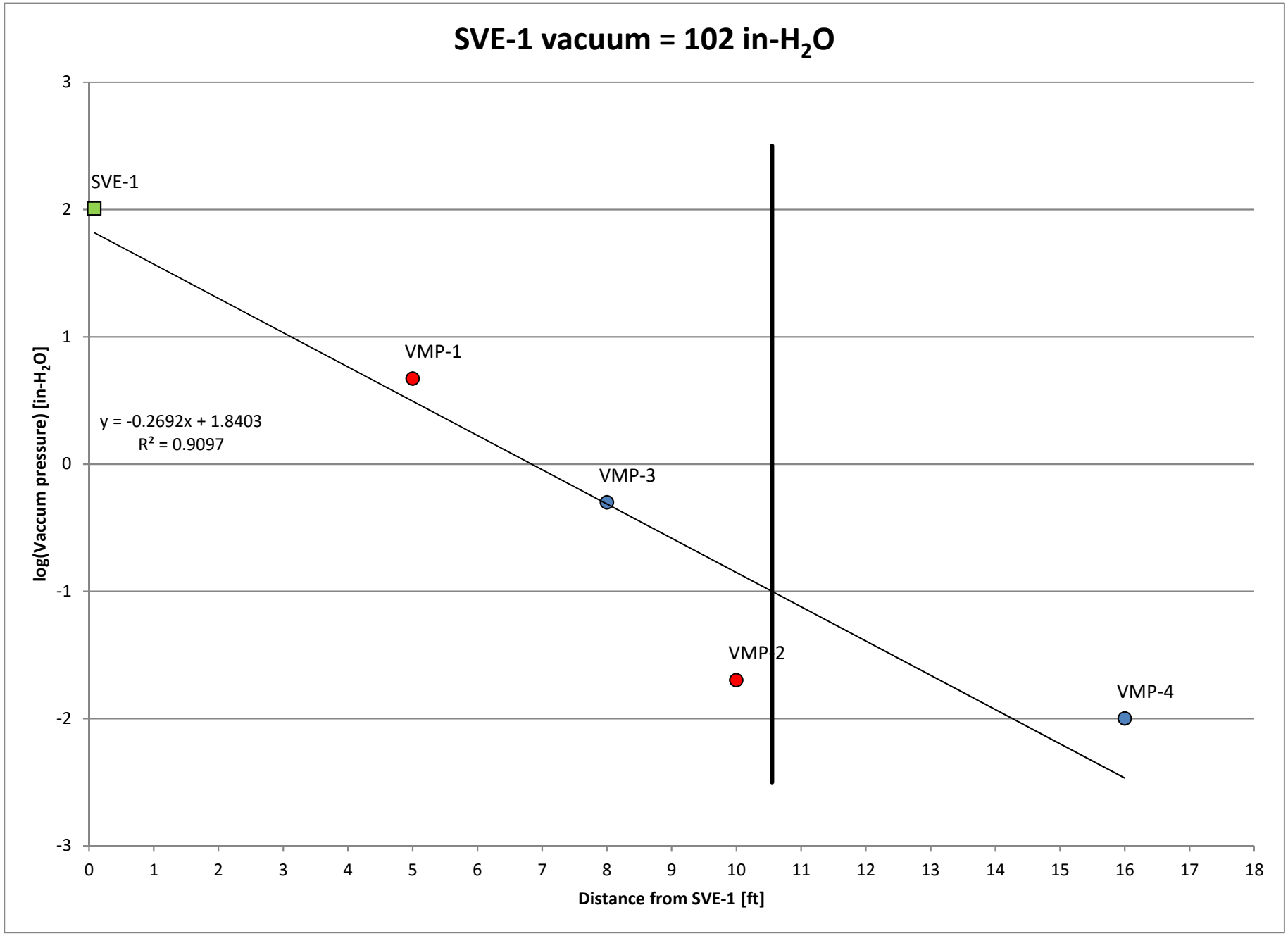
SVE-1 vacuum = 102 in-H2O
SVE-1
VMP-1
VMP-3
VMP-2
VMP-4
y = -0.2692x + 1.8403
R² = 0.9097
log(Vaccum pressure) [in-H2O]
Distance from SVE-1 [ft]
3
2
1
0
-1
-2
-3
0
1
2
3
4
5
6
7
8
9
10
11
12
13
14
15
16
17
18

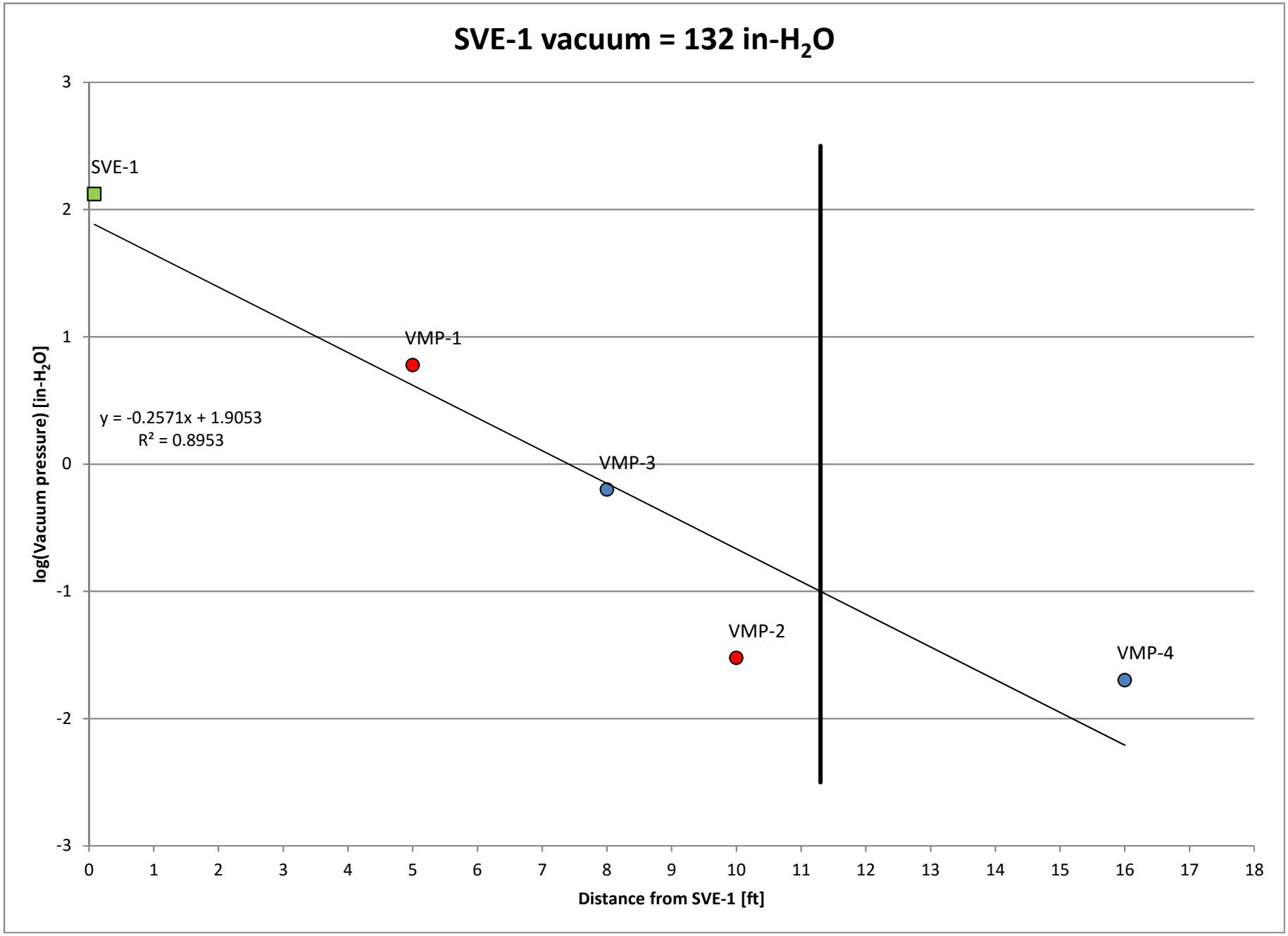
SVE-1 vacuum = 132 in-H2O
SVE-1
VMP-1
VMP-3
VMP-2
VMP-4
y = -0.2571x + 1.9053
R² = 0.8953
log(Vacuum pressure) [in-H2O]
Distance from SVE-1 [ft]
3
2
1
0
-1
-2
-3
0
1
2
3
4
5
6
7
8
9
10
11
12
13
14
15
16
17
18

APPENDIX B

Geosyntec Consultants

Written By:	**Matthew Jenny**	**Date:**	**9/26/2016**	**Reviewed by:**	**Kaitlyn Rhonehouse**	**Date:**	**9/26/2016**
Client:	**G&K**	**Project:**	**Graham**	**Project No.:**	**GN5616A**	**Phase No.:**	**4**

Objective: Using 0.3 darcy as an esimate for the expected intrinsic permeability of a saprolite formation, calculate the estimated flow rate from the proposed SVE wells.

Equation 3[1]

$$Q_W = H\left(\frac{\pi k}{\mu}\right)\left(\frac{P_w}{\ln\left(\frac{R_w}{R_1}\right)}\right)\left(1-\left(\frac{P_1}{P_w}\right)^2\right)$$

Anticipated Conditions

			Input	
H = height of the well screen	10	feet	3.0	meters
π = pi	3.14	Unit less	3.14	Unit less
k = intrinsic permeability	0.3	Darcy	3.0E-13	m^2
μ = Viscosity of Air	1.85E-05	kg/m/s	1.85E-05	kg/m/s
P_1 = Vacuum at ROI (Gauge)	0.10	inches of water	--	
P_1 = Vacuum at ROI (Absolute)	407	inches of water	101318.1	$kg/m/s^2$
R_w = Radius of well[2]	1	inch	0.0254	meters
R_1 - Radius of Influence	10	ft	3.0	meters
P_w = Vacuum applied at the well head (Gauge)	100	inches of water	--	
P_w = Vacuum applied at the well head (Absolute)	307	inches of water	76443	$kg/m/s^2$
Q_w = Flow rate	**3.9**	ft^3/min	**1.9E-03**	m^3/s

Notes:
1 - Flow rate equation (Eq 3) derived from the pneumatic form of the Jacobs equation.

Geosyntec Consultants

Written By:	**Matthew Jenny**	**Date:**	**9/26/2016**	**Reviewed by:**	**Kaitlyn Rhonehouse**	**Date:**	**9/26/2016**
Client:	**G&K**	**Project:**	**Graham**	**Project No.:**	**GN5616A**	**Phase No.:**	**4**

Objective: Using 3.0 darcy as a representative intrinsic permeability based on the results of the March 2015 SVE pilot testing, calculate the estimated flow rate from the proposed SVE wells.

Equation 3[1]

$$Q_W = H\left(\frac{\pi k}{\mu}\right)\left(\frac{P_w}{\ln\left(\frac{R_w}{R_1}\right)}\right)\left(1-\left(\frac{P_1}{P_w}\right)^2\right)$$

Anticipated Conditions

			Input	
H = height of the well screen	10	feet	3.0	meters
π = pi	3.14	Unit less	3.14	Unit less
k = intrinsic permeability	3.0	Darcy	3.0E-12	m^2
μ = Viscosity of Air	1.85E-05	kg/m/s	1.85E-05	kg/m/s
P_1 = Vacuum at ROI (Gauge)	0.10	inches of water	--	
P_1 = Vacuum at ROI (Absolute)	407	inches of water	101318.1	$kg/m/s^2$
R_w = Radius of well[2]	1	inch	0.0254	meters
R_1 - Radius of Influence	10	ft	3.0	meters
P_w = Vacuum applied at the well head (Gauge)	100	inches of water	--	
P_w = Vacuum applied at the well head (Absolute)	307	inches of water	76443	$kg/m/s^2$
Q_w = Flow rate	**39**	ft^3/min	**1.9E-02**	m^3/s

Notes:
1 - Flow rate equation (Eq 3) derived from the pneumatic form of the Jacobs equation.

Geosyntec Consultants

Written By:	Matthew Jenny	**Date:**	9/26/2016	**Reviewed by:**	Kaitlyn Rhonehouse	**Date:**	9/26/2016
Client:	G&K	**Project:**	Graham	**Project No.:**	GN5616A	**Phase No.:**	4

Objective: Calculate the intrinsic permeability based on the results of the March 2015 SVE pilot test conducted by Geosyntec

Equation 1[1]

$$k = Q_w \left(\frac{\mu}{\pi H} \right) \left(\frac{\ln \left(\frac{R_1}{R_w} \right)}{P_w \left(1 - \left(\frac{P_1}{P_w} \right)^2 \right)} \right)$$

Input Data From SVE pilot test

H = height of the well screen	10	feet	3.0	meters
π = pi	3.14	Unit less	3.14	Unit less
Q_w = Flow rate	21.5	ft^3/min	1.0E-02	m^3/s
μ = Viscosity of Air	1.85E-05	kg/m/s	1.85E-05	kg/m/s
P_1 = Vacuum at ROI (Gauge)	0.1	inches of water	--	
P_1 = Vacuum at ROI (Absolute)	407	inches of water	101318.1	kg/m/s^2
R_w = Radius of well[2]	1	inch	0.0254	meters
R_1 - Radius of Influence	8.1	ft	2.5	meters
P_w = Vacuum applied at the well head (Gauge)	41	inches of water	--	
P_w = Vacuum applied at the well head (Absolute)	366	inches of water	91134	kg/m/s^2
k = intrinsic permeability	**4.2.E+00**	**Darcy**	**4.2E-12**	**m^2**

Conclusion: Calculated intrinsic permeability is 4.2 Darcy.

Notes:
1 - Intrinsic permeability equation (Eq 1) derived from the pneumatic form of the Jacobs equation.

Geosyntec Consultants

Written By:	**Matthew Jenny**	**Date:**	**9/26/2016**	**Reviewed by:**	**Kaitlyn Rhonehouse**	**Date:**	**9/26/2016**
Client:	**G&K**	**Project:**	**Graham**	**Project No.:**	**GN5616A**	**Phase No.:**	**4**

Objective: Calculate the intrinsic permeability based on the results of the March 2015 SVE pilot test conducted by Geosyntec

Equation 1[1]

$$k = Q_w \left(\frac{\mu}{\pi H} \right) \left(\frac{\ln \left(\frac{R_1}{R_w} \right)}{P_w \left(1 - \left(\frac{P_1}{P_w} \right)^2 \right)} \right)$$

Input Data From SVE pilot test

H = height of the well screen	10	feet	3.0	meters
π = pi	3.14	Unit less	3.14	Unit less
Q_w = Flow rate	29.0	ft^3/min	1.4E-02	m^3/s
μ = Viscosity of Air	1.85E-05	kg/m/s	1.85E-05	kg/m/s
P_1 = Vacuum at ROI (Gauge)	0.1	inches of water	--	
P_1 = Vacuum at ROI (Absolute)	407	inches of water	101318.1	kg/m/s^2
R_w = Radius of well[2]	1	inch	0.0254	meters
R_1 - Radius of Influence	10.1	ft	3.1	meters
P_w = Vacuum applied at the well head (Gauge)	62	inches of water	--	
P_w = Vacuum applied at the well head (Absolute)	345	inches of water	85905	kg/m/s^2
k = intrinsic permeability	**3.8.E+00**	**Darcy**	**3.8E-12**	**m^2**

Conclusion: Calculated intrinsic permeability is 3.8 Darcy.

Notes:
1 - Intrinsic permeability equation (Eq 1) derived from the pneumatic form of the Jacobs equation.

Geosyntec Consultants

Written By:	Matthew Jenny	**Date:**	9/26/2016	**Reviewed by:**	Kaitlyn Rhonehouse	**Date:**	9/26/2016
Client:	G&K	**Project:**	Graham	**Project No.:**	GN5616A	**Phase No.:**	4

Objective: Calculate the intrinsic permeability based on the results of the March 2015 SVE pilot test conducted by Geosyntec

Equation 1[1]

$$k = Q_w \left(\frac{\mu}{\pi H} \right) \left(\frac{\ln \left(\frac{R_1}{R_w} \right)}{P_w \left(1 - \left(\frac{P_1}{P_w} \right)^2 \right)} \right)$$

Input Data From SVE pilot test

H = height of the well screen	10	feet	3.0	meters
π = pi	3.14	Unit less	3.14	Unit less
Q_w = Flow rate	34.3	ft^3/min	1.6E-02	m^3/s
μ = Viscosity of Air	1.85E-05	kg/m/s	1.85E-05	kg/m/s
P_1 = Vacuum at ROI (Gauge)	0.1	inches of water	--	
P_1 = Vacuum at ROI (Absolute)	407	inches of water	101318.1	kg/m/s^2
R_w = Radius of well[2]	1	inch	0.0254	meters
R_1 - Radius of Influence	10.6	ft	3.2	meters
P_w = Vacuum applied at the well head (Gauge)	102	inches of water	--	
P_w = Vacuum applied at the well head (Absolute)	305	inches of water	75945	kg/m/s^2
k = intrinsic permeability	**2.6.E+00**	**Darcy**	**2.6E-12**	**m^2**

Conclusion: Calculated intrinsic permeability is 2.6 Darcy.

Notes:
1 - Intrinsic permeability equation (Eq 1) derived from the pneumatic form of the Jacobs equation.

Geosyntec Consultants

Written By:	Matthew Jenny	**Date:**	9/26/2016	**Reviewed by:**	Kaitlyn Rhonehouse	**Date:**	9/26/2016
Client:	G&K	**Project:**	Graham	**Project No.:**	GN5616A	**Phase No.:**	4

Objective: Calculate the intrinsic permeability based on the results of the March 2015 SVE pilot test conducted by Geosyntec

Equation 1[1]

$$k = Q_W \left(\frac{\mu}{\pi H} \right) \left(\frac{\ln\left(\frac{R_1}{R_w} \right)}{P_w \left(1 - \left(\frac{P_1}{P_w} \right)^2 \right)} \right)$$

Input Data From SVE pilot test

H = height of the well screen	10	feet	3.0	meters
π = pi	3.14	Unit less	3.14	Unit less
Q_w = Flow rate	23.7	ft^3/min	1.1E-02	m^3/s
μ = Viscosity of Air	1.85E-05	kg/m/s	1.85E-05	kg/m/s
P_1 = Vacuum at ROI (Gauge)	0.1	inches of water	--	
P_1 = Vacuum at ROI (Absolute)	407	inches of water	101318.1	$kg/m/s^2$
R_w = Radius of well[2]	1	inch	0.0254	meters
R_1 - Radius of Influence	11.3	ft	3.4	meters
P_w = Vacuum applied at the well head (Gauge)	132	inches of water	--	
P_w = Vacuum applied at the well head (Absolute)	275	inches of water	68475	$kg/m/s^2$
k = intrinsic permeability	**1.3.E+00**	**Darcy**	**1.3E-12**	**m^2**

Conclusion: Calculated intrinsic permeability is 1.3 Darcy.

Notes:
1 - Intrinsic permeability equation (Eq 1) derived from the pneumatic form of the Jacobs equation..

APPENDIX C

Pipe Size and Head Loss Calculations for SVE System
G&K Graham Source Area SVE System

Radius of Influence (ft)	10
Number of Wells	6
Depth of SVE wells (ft BLS)	15
Well Design Air Flow Rate (cfm)	10
Total Design Air Flow Rate	60

Phase 1

Air Flow Rate (cfm)	30	30	15	30	30	15
From - To	shed to SVE3	SVE3 to SVE 2	SVE2 to SVE1	Shed to SVE6	SVE6 to SVE 5	SVE5 to SVE4
Pipe Size (in. Dia)	2	2	2	2	2	2
Friction Loss/10 ft pipe (psi)	0.00510	0.00510	0.00151	0.00510	0.00510	0.00151
Pipe Length (ft)	40	40	40	40	40	40
No. of Branch Tees	0	0	0	0	0	0
X equivalent pipe	12	12	12	12	12	12
Length (ft)	0	0	0	0	0	0
No. of Gate Valves (fully open)	1	1	1	1	1	1
X equivalent pipe	1.5	1.5	1.5	1.5	1.5	1.5
Length (ft)	1.5	1.5	1.5	1.5	1.5	1.5
No. of Check Valves	0	0	0	0	0	0
X equivalent pipe	11	11	11	11	11	11
Length (ft)	0	0	0	0	0	0
No. of 45 degree elbows	1	1	1	1	1	1
X equivalent pipe	2.5	2.5	2.5	2.5	2.5	2.5
Length (ft)	2.5	2.5	2.5	2.5	2.5	2.5
No. of 90 degree elbows	2	2	2	2	2	2
X equivalent pipe	6	6	6	6	6	6
Length (ft)	12	12	12	12	12	12
Subtotal Equivalent Length (ft)	56	56	56	56	56	56
Subtotal Frictional Loss (psi)	0.0286	0.0286	0.00847	0.0286	0.0286	0.00847
NEW PIPE SIZE						
Pipe Size (in. Dia)	4	4	4	4	4	4
Friction Loss/10 ft pipe (psi)	0.000368	0.000368	0.000110	0.000368	0.000368	0.000110
Pipe Length (ft)	45	60	80	40	55	70
No. of Branch Tees	1	1	0	1	1	0
X equivalent pipe	12	12	12	12	12	12
Length (ft)	12	12	0	12	12	0
No. of Gate Valves (fully open)	0	0	0	0	0	0
X equivalent pipe	1.5	1.5	1.5	1.5	1.5	1.5
Length (ft)	0	0	0	0	0	0
No. of Check Valves	0	0	0	0	0	0
X equivalent pipe	11	11	11	11	11	11
Length (ft)	0	0	0	0	0	0
No. of 45 degree elbows	0	0	0	0	0	0
X equivalent pipe	2.5	2.5	2.5	2.5	2.5	2.5
Length (ft)	0	0	0	0	0	0
No. of 90 degree elbows	0	0	1	0	0	1
X equivalent pipe	6	6	6	6	6	6
Length (ft)	0	0	6	0	0	6
Subtotal Equivalent Length (ft)	57	72	86	52	67	76
Subtotal Frictional Loss (psi)	0.00209	0.00265	0.000949	0.00191	0.00246	0.000838
NEW PIPE SIZE						
Pipe Size (in. Dia)	4	4	4	4	4	4
Friction Loss/10 ft pipe (psi)	0.000368	0.000368	0.000110	0.000368	0.000368	0.000110
Pipe Length (ft)	110	110	110	150	150	150
No. of Branch Tees	1	1	1	1	1	1
X equivalent pipe	12	12	12	12	12	12
Length (ft)	12	12	12	12	12	12
No. of Gate Valves (fully open)	0	0	0	0	0	0
X equivalent pipe	1.5	1.5	1.5	1.5	1.5	1.5
Length (ft)	0	0	0	0	0	0
No. of Check Valves	0	0	0	0	0	0
X equivalent pipe	11	11	11	11	11	11
Length (ft)	0	0	0	0	0	0
No. of 45 degree elbows	0	0	0	0	0	0
X equivalent pipe	2.5	2.5	2.5	2.5	2.5	2.5
Length (ft)	0	0	0	0	0	0
No. of 90 degree elbows	2	2	2	3	3	3
X equivalent pipe	6	6	6	6	6	6
Length (ft)	12	12	12	18	18	18
Subtotal Equivalent Length (ft)	134	134	134	180	180	180
Subtotal Frictional Loss (psi)	0.00492	0.00492	0.00148	0.00662	0.00662	0.00199
Total Equivalent Length (ft)	247	262	276	288	303	312
Frictional Loss (psi)	0.0356	0.0361	0.0109	0.0371	0.0376	0.0113
Frictional Loss (in wc)	0.985	1.00	0.302	1.03	1.04	0.313

	in.w.c.	psi
Piping Frictional Loss	1.04	0.038
Flow Meter	3.0	0.11
In-Line Filter	1.0	0.04
Moisture Separator (in w.c.)	0.5	0.02
Vacuum at Well Head	100	3.62
TOTAL	**105.5**	**3.8**

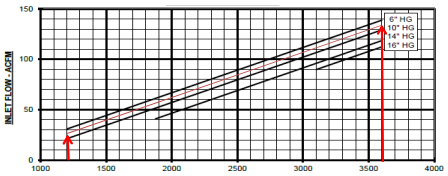

At 60 cfm, the Howden Roots® Universal RAI-G® 32 Blower will operate at 105.5 in wc, which will supply 100 in wc at the well head.

Notes:

1. Values for friction loss taken from Perry's Chemical Engineers' Handbook, 7th Edition, Robert H. Perry et al. 1985

2. Friction loss values were not available for flow rates of 10 and 20 cfm; thus, 15 and 30 cfm were used in place of 10 and 20 cfm respectively to provide a conservative estimate.

3. Friction loss values were not available for 6 in. diameter piping; thus, 4 in. diameter was used for 6 in. diameter sections of the SVE system to provide a conservative estimate.

URAI-G Blowers Frames 32 thru 615

ROOTS™ Universal RAI-G™

Design and Construction Features

- Mechanical seals
- Rigid one-piece cast iron casing
- Anti-friction bearings
- Splash oil lubricated spur timing gears
- Connections in standard pipe sizes
- Straight, precision machined two-lobe impellers
- Ground steel shafts
- Detachable steel mounting feet

Universal RAI-G® gas blowers are heavy duty rotary blowers designed with mechanical seals and rugged steel mounting feet. Optional feet are available for horizontal installations. The compact, sturdy design is engineered for continuous service when operated in accordance with speed and pressure ratings.

Basic blower description

The basic model consists of a cast iron casing, carburized and ground alloy steel spur timing gears secured to steel shafts with a taper mounting and locknut, and cast iron involute impellers. Oversized anti-friction bearings are used, with a cylindrical rollerbearing at the drive shaft to withstand V-belt pull. The Universal RAI-G® features splash oil lube on the gear end and grease lube on the drive end. ROOT's exclusive "figure-eight" gearbox design improves oil distribution to maximize gear and bearing life.

Each unit is mechanically tested and given a 15 psig static leak test. A 1/8" NPT purge port is provided at each seal for buffer gas application as required. After testing, the unit is sprayed with a protective paint, and boxed or skid mounted for delivery.

Accessories are available through our distributors. ROOTS™ synthetic oil and grease is highly recommended.

Outline drawing & dimensional table

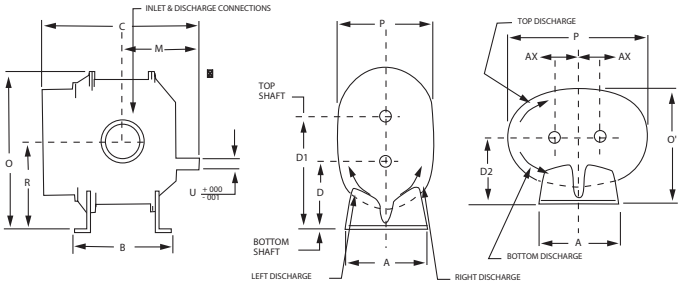

Frame size	A	A'	B	C	D	D1	D2	M	O	O'	P	P'	R	U	Inlet Disch.	AX	Wgt.
32	7.25	7.25	6.75	11.25	5	8.5	5	5.81	12.81	8.88	7.75	12.13	6.75	0.75	1.25 NPT	1.75	69
33	7.25	7.25	7.63	12.13	5	8.5	5	6.25	12.81	8.88	7.75	12.13	6.75	0.75	2.0 NPT	1.75	74
36	7.25	7.25	10	14.63	5	8.5	5	7.56	12.81	8.88	7.75	12.13	6.75	0.75	2.5 NPT	1.75	102
42	8	8	7.25	13	6.25	10.25	6.25	6.86	15.06	10.63	8.75	13.63	8.25	0.875	1.5 NPT	2	88
45	8	8	10	15.5	6.25	10.25	6.25	8	15.06	10.63	8.75	13.63	8.25	0.875	2.5 NPT	2	109
47	8	8	11.75	17.63	6.25	10.25	6.25	9.25	15.06	10.5	8.5	13.63	8.25	0.875	3.0 NPT	2	128
53	10.5	10.5	8.38	15.38	6.25	11.25	6.75	8.18	17.38	11.88	10.25	17.25	8.75	1.125	.2.5 NPT	2.5	143
56	10.5	10.5	11	18	6.25	11.25	6.75	9.19	17.38	12.25	11	17.25	8.75	1.125	4.0 NPT	2.5	170
59	10.5	10.5	14	21.18	6.25	11.25	6.75	11.19	17.38	12.25	11	17.25	8.75	1.125	4.0 NPT	2.5	204
65	11	11	10	18.38	8.75	14.75	8.75	9.19	21.63	15.13	12.75	19.75	11.75	1.375	3.0 NPT	3	245
68	11	11	13	21.38	8.75	14.75	8.75	10.82	21.63	15.13	12.75	19.75	11.75	1.375	5.0 NPT	3	285
615	11	11	20	28.38	8.75	14.75	8.75	14.32	21.63	16.25	15	19.75	11.75	1.375	06.0 FLG	3	425

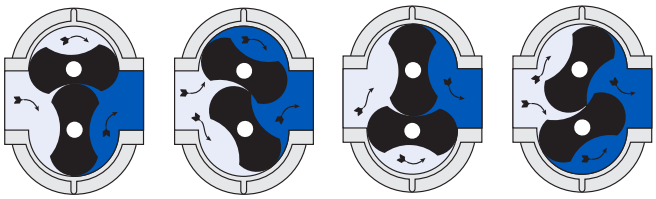

POSITION 1 POSITION 2 POSITION 3 POSITION 4

Operating principle

Two figure-eight lobe impellers mounted on parallel shafts rotate in opposite directions. As each impeller passes the blower inlet, it traps a definite volume of gas and carries it around the case to the blower outlet, where the gas is discharged. With constant speed operation, the displaced volume is essentially the same regardless of pressure, temperature or barometric pressure.

Timing gears control the relative position of the impellers to each other and maintain small but definite clearances. This allows operation without lubrication being required inside the gas casing.

For further information contact

Howden Roots
900 W. Mount St.
Connersville
Indiana
USA
47331
Tel: +1 765 827 9200
Web: www.howden.com

Performance table

Frame Size	Speed RPM	4 PSI		5 PSI		6 PSI		7 PSI		8 PSI		9 PSI		10 PSI		12 PSI		13 PSI		14 PSI		15 PSI		Vacuum Data		
		CFM	BHP	CFM	BHP	CFM	BHP	CFM	BHP	CFM	BHP	CFM	BHP	CFM	BHP	CFM	BHP	CFM	BHP	CFM	BHP	CFM	BHP	IN-HGV	CFM	BHP
32U	1750	45	1.4	41	1.7	37	2.1	34	2.4	31	2.8	28	3.1	25	3.5	-	-	-	-	-	-	-	-	12	26	2
	2950	99	2.4	95	3	91	3.6	88	4.2	85	4.7	82	5.3	79	5.9	74	7.1	72	7.6	69	8.2	67	8.8	15	68	4.3
	3550	126	3	122	3.7	118	4.4	115	5.1	112	5.8	109	6.5	106	7.2	101	8.6	99	9.3	96	10	94	10.6	16	90	5.6
33U	1750	64	1.9	58	2.4	54	2.9	49	3.3	45	3.8	41	4.3	38	4.7	-	-	-	-	-	-	-	-	12	39	2.8
	2950	138	3.3	132	4.1	128	4.9	123	5.7	119	6.5	115	7.3	112	8.1	105	9.7	-	-	-	-	-	-	15	97	5.9
	3550	174	4.1	169	5	165	6	160	6.9	1156	7.9	152	8.8	149	9.8	142	11.7	-	-	-	-	-	-	15	134	7.2
36U	1750	116	3.2	109	3.9	102	4.7	96	5.5	-	-	-	-	-	-	-	-	-	-	-	-	-	-	13	74	5
	2950	238	5.5	231	6.8	224	8.1	218	9.4	-	-	-	-	-	-	-	-	-	-	-	-	-	-	15	181	9.8
	3550	300	6.7	292	8.3	286	9.9	279	11.5	-	-	-	-	-	-	-	-	-	-	-	-	-	-	15	243	11.9
42U	1750	68	1.9	64	2.4	59	2.8	56	3.3	52	3.7	49	4.2	46	4.7									14	42	3
	2950	141	3.3	136	4.1	132	4.9	128	5.7	125	6.5	122	7.2	119	8	113	9.6	11	10.3	10.8	11.1	105	11.9	16	101	6.2
	3550	177	4.1	172	5.1	168	6	165	7	161	7.9	158	8.8	155	9.8	149	11.6	146	12.6	144	13.5	141	14.4	16	137	7.6
45U	1750	144	3.8	136	4.7	129	5.6	122	6.6	116	7.5	110	8.4	104	9.3	-	-	-	-	-	-	-	-	13	98	5.9
	2950	289	6.7	281	8.2	274	9.8	267	11.3	261	12.9	255	14.4	249	16	-	-	-	-	-	-	-	-	16	218	12.5
	3550	362	8.2	354	10.1	346	12	340	13.9	333	15.7	328	17.6	322	19.5	-	-	-	-	-	-	-	-	16	291	15.2
47U	1750	193	5	183	6.2	174	7.4	166	8.6	-	-	-	-	-	-	-	-	-	-	-	-	-	-	14	126	8.4
	2950	385	8.8	375	10.8	366	12.9	357	14.9	-	-	-	-	-	-	-	-	-	-	-	-	-	-	15	307	15.4
	3550	480	10.9	470	13.3	461	15.8	453	18.3	-	-	-	-	-	-	-	-	-	-	-	-	-	-	15	402	18.8
53U	1170	99	2.7	92	3.4	86	4.1	81	4.8	76	5.4	71	6.1	66	6.8	-	-	-	-	-	-	-	-	12	67	4.3
	1750	175	4.2	168	5.2	163	6.2	157	7.2	152	8.2	147	9.2	143	10.3	134	12.3	130	13.3	127	14.3	-	-	15	124	7.5
	2850	320	7.4	313	9.1	308	10.7	302	12.3	297	14	292	15.6	288	17.2	279	20.5	275	22.1	272	23.8	268	25.4	16	262	13.4
56U	1170	174	4.6	164	5.7	155	6.9	147	8	139	9.1	132	10.2	125	11.4	112	13.6	-	-	-	-	-	-	13	117	7.2
	1750	302	7	292	8.7	283	10.4	275	12.1	267	13.8	260	15.5	253	17.2	241	20.5	235	22.2	-	-	-	-	15	225	12.6
	2850	546	12.2	536	15	527	17.7	518	20.5	511	23.2	503	26	496	28.7	484	34.2	478	37	-	-	-	-	16	468	21
59U	1170	272	6.7	259	8.4	248	10	238	11.7	-	-	-	-	-	-	-	-	-	-	-	-	-	-	14	188	11.4
	1750	459	10.3	447	12.8	436	15.2	425	17.7	-	-	-	-	-	-	-	-	-	-	-	-	-	-	15	363	18.4
	2850	815	18	802	22	791	26	780	30	-	-	-	-	-	-	-	-	-	-	-	-	-	-	15	718	30.8
65U	1170	201	5.2	190	6.4	181	7.7	172	8.9	164	10.2	157	11.5	150	12.7	137	15.2	130	16.5	-	-	-	-	14	132	8.7
	1750	343	8	333	9.9	324	11.8	315	13.7	307	15.6	300	17.4	293	19.3	279	23.1	273	24.9	267	26.8	261	28.7	16	252	15.1
	2350	491	11.4	481	13.9	471	16.4	463	19	455	21.5	447	24	426	26.5	427	31.6	421	34.1	415	36.6	409	39.1	16	400	20.6
68U	1170	322	8.3	305	10.3	291	12.3	277	14.3	264	16.3	252	18.3	241	20.3	219	24.4	210	26.4	-	-	-	-	14	211	13.9
	1750	551	12.7	535	15.7	520	18.7	506	21.8	493	24.8	481	27.8	470	30.8	470	36.8	439	39.8	429	42.9	-	-	16	405	24
	2350	788	17.8	772	21.8	757	25.9	743	29.9	703	34	718	38	707	42.1	707	50.2	676	54.2	666	58.3	-	-	16	642	32.8
615U	1170	603	15.4	572	19.1	544	22.9	519	26.7	-	-	-	-	-	-	-	-	-	-	-	-	-	-	11	483	20.5
	1750	1032	23.2	1001	29.1	973	34.7	948	40.4	-	-	-	-	-	-	-	-	-	-	-	-	-	-	12	885	33.7
	2350	1476	32.4	1445	40	1417	47.6	1392	55.2	-	-	-	-	-	-	-	-	-	-	-	-	-	-	12	1329	46

Notes:

1. Performance based on inlet methane at standard pressure of 14.7 psia, standard temperature of 68° F, and specific gravity of 0.55.
2. Vacuum ratings based on inlet methane at standard temperature of 68°F, discharge pressure of 30" Hg and specific gravity of 0.55.

©Howden Group Limited. All rights reserved. 2015.
Howden and the flying H logo are registered trade marks belonging to Howden Group Limited.

WWW.HOWDEN.COM

PERFORMANCE BASED ON AIR,
INLET AT 68^{0}F
DISCHARGE PRESSURE = 30" HG ABS.
CURVES GENERATED: DEC-2004

VACUUM PERFORMANCE
FRAME 32 U-RAI
MAX. VACUUM = 16" HG
MAX. SPEED = 3600 RPM

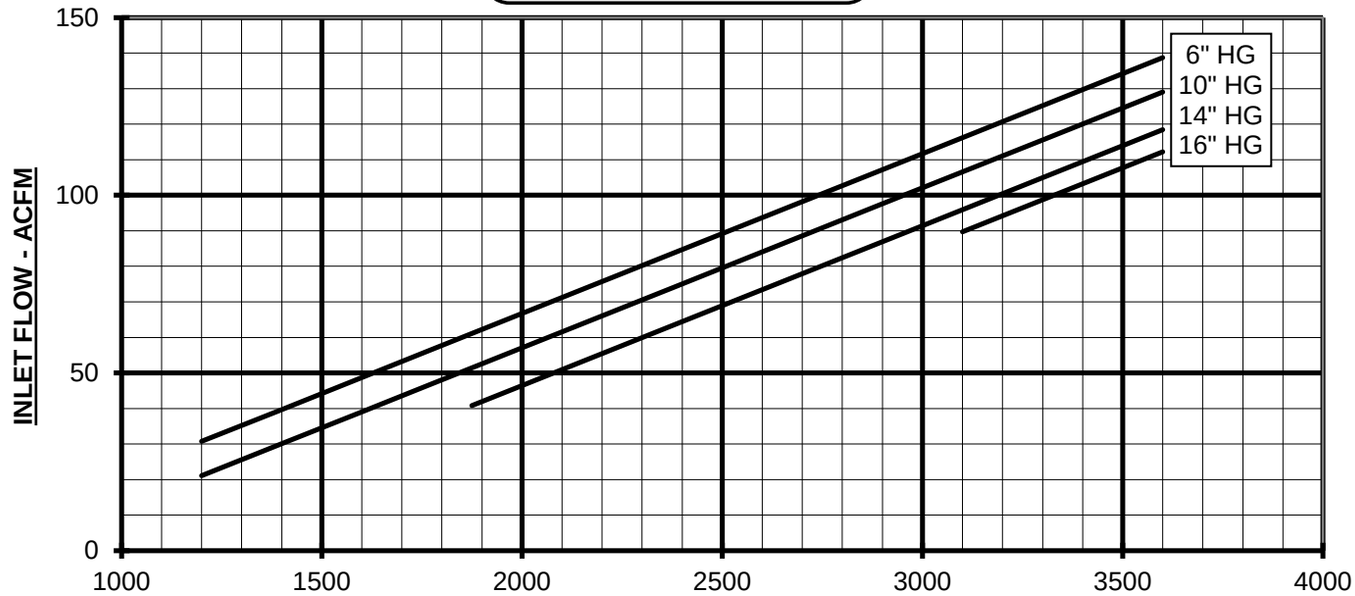

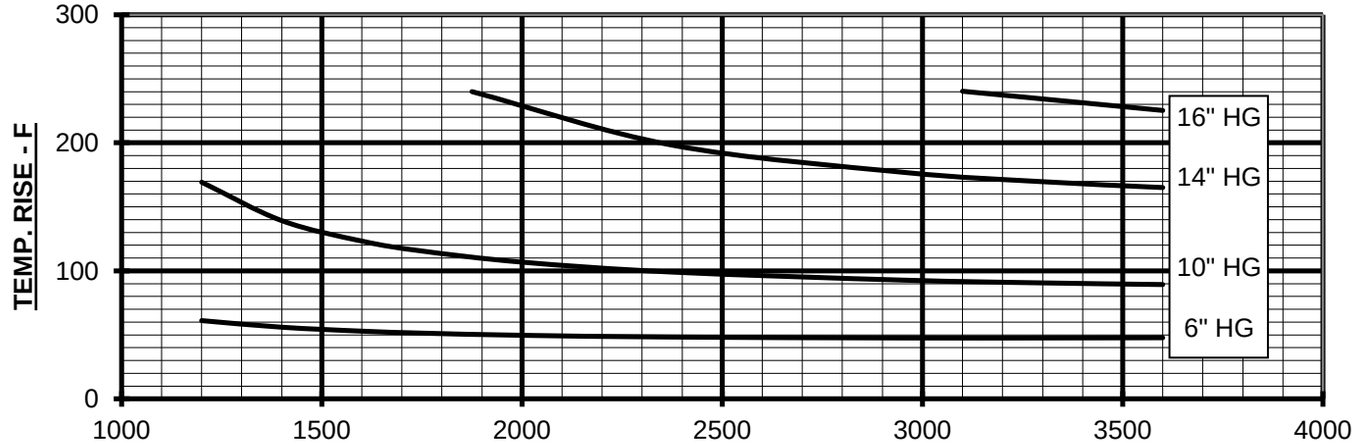

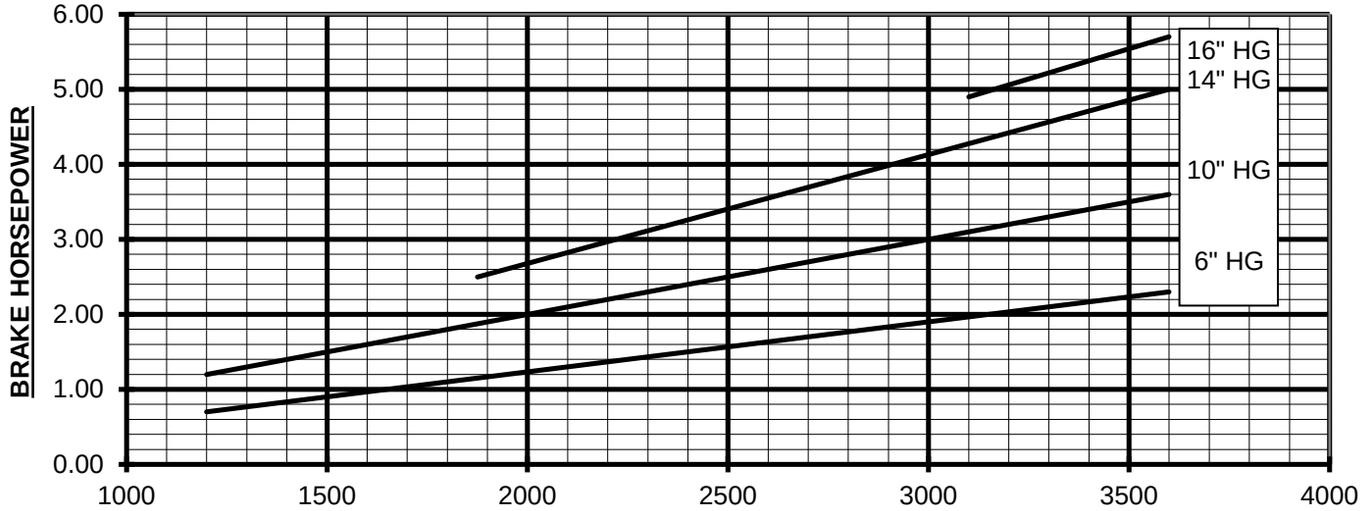

SPEED - RPM

LATEST REVISION	DESCRIPTION
SEP-2015	HOWDEN LOGO/BRANDING

APPENDIX D

15A NCAC 02Q .0102 ACTIVITIES EXEMPTED FROM PERMIT REQUIREMENTS

(a) This Rule does not apply to facilities required to have a permit under Section .0500 of this Subchapter. This Rule applies only to permits issued under Section .0300 of this Subchapter.

(b) If a source is subject to any of the following rules, then the source is not exempted from permit requirements:

(1) new source performance standards under Rule 15A NCAC 02D .0524 or 40 CFR Part 60, except when the following activities are eligible for exemption under Paragraph (c) of this Rule:

(A) 40 CFR Part 60, Subpart Dc, industrial, commercial, and institutional steam generating units;

(B) 40 CFR Part 60, Subparts K, Ka, or Kb, volatile organic liquid storage vessels;

(C) 40 CFR Part 60, Subpart AAA, new residential wood heaters;

(D) 40 CFR Part 60, Subpart JJJ, petroleum dry cleaners;

(E) 40 CFR Part 60, Subpart WWW, municipal solid waste landfills;

(F) 40 CFR Part 60, Subpart IIII, stationary compression ignition internal combustion engines; or

(G) 40 CFR Part 60, Subpart JJJJ, stationary spark ignition internal combustion engines;

(2) national emission standards for hazardous air pollutants under Rule 15A NCAC 02D .1110 or 40 CFR Part 61, except asbestos demolition and renovation activities, which are eligible for exemption under Paragraph (c) of this Rule;

(3) prevention of significant deterioration under Rule 15A NCAC 02D .0530;

(4) new source review under Rule 15A NCAC 02D .0531 or .0532;

(5) sources of volatile organic compounds subject to the requirements of Section .0900, Volatile Organic Compounds, that are located in Mecklenburg County according to Rule 15A NCAC 02D .0902(f);

(6) sources required to apply maximum achievable control technology (MACT) for hazardous air pollutants under Rule 15A NCAC 02D .1109, .1111, .1112, or 40 CFR Part 63 that are required to have a permit under Section .0500 of this Subchapter;

(7) sources at facilities subject to Section .1100 of Subchapter 02D. (If a source qualifies for an exemption in Subparagraphs (a)(1) through (a)(24) of 15A NCAC 02Q .0702, or does not emit a toxic air pollutant for which the facility at which it is located has been modeled, it shall be exempted from needing a permit if it qualifies for one of the exemptions in Paragraph (c) of this Rule).

(c) The following activities do not require a permit or permit modification under Section .0300 of this Subchapter. The Director may require the owner or operator of these activities to register them under 15A NCAC 02D .0200:

(1) categories of exempted activities:

(A) maintenance, upkeep, and replacement:

(i) maintenance, structural changes, or repairs which do not change the capacity of such process, fuel-burning, refuse-burning, or control equipment, and do not involve any change in quality or nature or increase in quantity of emission of regulated air pollutants;

(ii) housekeeping activities or building maintenance procedures, including painting buildings, resurfacing floors, roof repair, washing, portable vacuum cleaners, sweeping, use and associated storage of janitorial products, or insulation removal;

(iii) use of office supplies, supplies to maintain copying equipment, or blueprint machines;

(iv) use of fire fighting equipment;

(v) paving parking lots; or

(vi) replacement of existing equipment with equipment of the same size, type, and function that does not result in an increase to the actual or potential emission of regulated air pollutants and that does not affect the compliance status, and with replacement equipment that fits the description of the existing equipment in the permit, including the application, such that the replacement equipment can be operated under that permit without any changes in the permit;

(B) air conditioning or ventilation: comfort air conditioning or comfort ventilating systems that do not transport, remove, or exhaust regulated air pollutants to the atmosphere;

(C) laboratory activities:

(i) bench-scale, on-site equipment used exclusively for chemical or physical analysis for quality control purposes, staff instruction, water or wastewater analyses, or non-production environmental compliance assessments;

(ii) bench-scale experimentation, chemical or physical analyses, training or instruction from not-for-profit, non-production educational laboratories;

(iii) bench-scale experimentation, chemical or physical analyses, training or instruction from hospitals or health laboratories pursuant to the determination or diagnoses of illness; or

(iv) research and development laboratory activities provided the activity produces no commercial product or feedstock material;

(D) storage tanks:

(i) storage tanks used solely to store fuel oils, kerosene, diesel, crude oil, used motor oil, lubricants, cooling oils, natural gas or liquefied petroleum gas;

(ii) storage tanks used to store gasoline or ethanol-based fuels for which there are no applicable requirements except Stage I controls under 15A NCAC 02D .0928;

(iii) storage tanks used solely to store inorganic liquids; or

(iv) storage tanks or vessels used for the temporary containment of materials resulting from an emergency response to an unanticipated release of hazardous materials;

(E) combustion and heat transfer equipment:

(i) space heaters burning distillate oil, kerosene, natural gas, or liquefied petroleum gas operating by direct heat transfer and used solely for comfort heat;

(ii) residential wood stoves, heaters, or fireplaces;

(iii) hot water heaters which are used for domestic purposes only and are not used to heat process water;

(F) wastewater treatment processes: industrial wastewater treatment processes or municipal wastewater treatment processes for which there are no applicable requirements;

(G) gasoline distribution: gasoline service stations or gasoline dispensing facilities;

(H) dispensing equipment: equipment used solely to dispense diesel fuel, kerosene, lubricants or cooling oils;

(I) solvent recycling: portable solvent distillation systems used for on-site solvent recycling if:

(i) the portable solvent distillation system is not:

(I) owned by the facility, and

(II) operated at the facility for more than seven consecutive days; and

(ii) the material recycled is recycled at the site of origin;

(J) processes:

(i) electric motor burn-out ovens with secondary combustion chambers or afterburners;

(ii) electric motor bake-on ovens;

(iii) burn-off ovens for paint-line hangers with afterburners;

(iv) hosiery knitting machines and associated lint screens, hosiery dryers and associated lint screens, and hosiery dyeing processes where bleach or solvent dyes are not used;

(v) blade wood planers planing only green wood;

(K) solid waste landfills: municipal solid waste landfills. This does not apply to flares and other sources of combustion at solid waste landfills; these flares and other combustion sources are required to be permitted under Section .0300 of this Subchapter unless they qualify for another exemption under this Paragraph;

(L) miscellaneous:

(i) motor vehicles, aircraft, marine vessels, locomotives, tractors or other self-propelled vehicles with internal combustion engines;

(ii) non-self-propelled non-road engines, except generators, regulated by rules adopted under Title II of the Federal Clean Air Act (Generators are required to be permitted under Section .0300 of this Subchapter unless they qualify for another exemption under this Paragraph.);

(iii) portable generators regulated by rules adopted under Title II of the Federal Clean Air Act;

(iv) equipment used for the preparation of food for direct on-site human consumption;

(v) a source whose emissions are regulated only under Section 112(r) or Title VI of the Federal Clean Air Act;

(vi) exit gases from in-line process analyzers;

(vii) stacks or vents to prevent escape of sewer gases from domestic waste through plumbing traps;

(viii) refrigeration equipment that is consistent with Section 601 through 618 of Title VI (Stratospheric Ozone Protection) of the Federal Clean Air Act, 40 CFR Part 82, and any other regulations promulgated by EPA under Title VI for stratospheric ozone protection, except those units used as or in conjunction with air pollution control equipment (A unit used as or in conjunction with air pollution control equipment is required to be permitted under Section .0300 of this Subchapter unless it qualifies for another exemption under this Paragraph);

(ix) equipment not vented to the outdoor atmosphere with the exception of equipment that emits volatile organic compounds (Equipment that emits volatile organic compounds is required to be permitted under Section .0300 of this Subchapter unless it qualifies for another exemption under this Paragraph);

(x) equipment that does not emit any regulated air pollutants;

(xi) facilities subject only to a requirement under 40 CFR Part 63 (This Subpart does not apply when a control device is used to meet a MACT or GACT emission standard; a control device used to meet a MACT or GACT emission standard is required to be permitted under Section .0300 of this Subchapter unless it qualifies for another exemption under this Paragraph);

(xii) sources for which there are no applicable requirements;

(xiii) animal operations not required to have control technology under Section .1800 of the Subchapter 02D (If an animal operation is required to have control technology, it shall be required to have a permit under this Subchapter).

(2) categories of exempted size or production rate:

(A) storage tanks:

(i) above-ground storage tanks with a storage capacity of no more than 1100 gallons storing organic liquids with a true vapor pressure of no more than 10.8 pounds per square inch absolute at 70°F; or

(ii) underground storage tanks with a storage capacity of no more than 2500 gallons storing organic liquids with a true vapor pressure of no more than 10.8 psi absolute at 70°F;

(B) combustion and heat transfer equipment:

(i) fuel combustion equipment, except for internal combustion engines, firing exclusively kerosene, No. 1 fuel oil, No. 2 fuel oil, equivalent unadulterated fuels, or a mixture of these fuels or one or more of these fuels mixed with natural gas or liquefied petroleum gas with a heat input of less than:

(I) 10 million Btu per hour for which construction, modification, or reconstruction commenced after June 9, 1989; or

(II) 30 million Btu per hour for which construction, modification, or reconstruction commenced before June 10, 1989;

Internal combustion engines are required to be permitted under Section .0300 of this Subchapter unless they qualify for another exemption under this Paragraph;

(ii) fuel combustion equipment, except for internal combustion engines, firing exclusively natural gas or liquefied petroleum gas or a mixture of these fuels with a heat input rating less than 65 million Btu per hour (Internal combustion engines are required to be permitted under Section .0300 of this Subchapter unless they qualify for another exemption under this Paragraph);

(iii) space heaters burning waste oil if:

(I) the heater burns only oil that the owner or operator generates or used oil from do-it-yourself oil changers who generate used oil as household wastes;

(II) the heater is designed to have a maximum capacity of not more than 500,000 Btu per hour; and

(III) the combustion gases from the heater are vented to the ambient air;

(iv) fuel combustion equipment with a heat input rating less than 10 million Btu per hour that is used solely for space heating except:

(I) space heaters burning waste oil; or

(II) internal combustion engines;

(v) emergency use generators and other internal combustion engines not regulated by rules adopted under Title II of the Federal Clean Air Act, except self-propelled vehicles, that have a rated capacity of no more than:

(I) 680 kilowatts (electric) or 1000 horsepower for natural gas-fired engines;

(II) 1800 kilowatts (electric) or 2510 horsepower for liquefied petroleum gas-fired engines;

(III) 590 kilowatts (electric) or 900 horsepower for diesel-fired or kerosene-fired engines; or

(IV) 21 kilowatts (electric) or 31 horsepower for gasoline-fired engines;

(Self-propelled vehicles with internal combustion engines are exempted under Subpart (1)(c)(L)(i) of this Paragraph.)

(vi) portable generators and other portable equipment with internal combustion engines not regulated by rules adopted under Title II of the Federal Clean Air Act, except self-propelled vehicles, that operate at the facility no more than a combined 350 hours for any 365-day period provided the generators or engines have a rated capacity of no more than 750 kilowatt (electric) or 1100 horsepower each and provided records are maintained to verify the hours of operation. Self-propelled vehicles with internal combustion engines are exempted under Subpart (1)(c)(L)(i) of this Paragraph;

(vii) peak shaving generators that produce no more than 325,000 kilowatt-hours of electrical energy for any 12-month period provided records are maintained to verify the energy production on a monthly basis and on a 12-month basis;

(C) gasoline distribution: bulk gasoline plants with an average daily throughput of less than 4000 gallons;

(D) processes:

(i) graphic arts operations, paint spray booths or other painting or coating operations without air pollution control devices (water wash and filters that are an integral part of the paint spray booth are not considered air pollution control devices), and solvent cleaning operations located at a facility whose facility-wide actual emissions of volatile organic compounds are less than five tons per year (Graphic arts operations, coating operations, and solvent cleaning operations are defined in Rule 15A NCAC 02Q .0803);

(ii) sawmills that saw no more than 2,000,000 board feet per year, provided only green wood is sawed;

(iii) perchloroethylene dry cleaners that emit less than 13,000 pounds of perchloroethylene per year;

(iv) electrostatic dry powder coating operations with filters or powder recovery systems, including electrostatic dry powder coating operations equipped with curing ovens with a heat input of less than 10,000,000 Btu per hour;

(E) miscellaneous:

(i) any source whose emissions would not violate any applicable emissions standard and whose potential emissions of particulate, sulfur dioxide, nitrogen oxides, volatile organic compounds, and carbon monoxide before air pollution control devices, such as potential uncontrolled emissions, would each be no more than five tons per year and whose potential emissions of hazardous air pollutants would be below their lesser quantity cutoff except:

(I) storage tanks;

(II) fuel combustion equipment;
(III) space heaters burning waste oil;
(IV) generators, excluding emergency generators, or other non-self-propelled internal combustion engines;
(V) bulk gasoline plants;
(VI) printing, paint spray booths, or other painting or coating operations;
(VII) sawmills;
(VIII) perchloroethylene dry cleaners; or
(IX) electrostatic dry powder coating operations, provided that the total potential emissions of particulate, sulfur dioxide, nitrogen oxides, volatile organic compounds, and carbon monoxide from the facility are each less than 40 tons per year and the total potential emissions of all hazardous air pollutants are below their lesser quantity cutoff emission rates or provided that the facility has an air quality permit. A source identified in Sub-subpart (I) through (IX) of this Part is required to be permitted under 15A NCAC 02Q .0300 unless it qualifies for another exemption under this Paragraph;

(ii) any facility whose actual emissions of particulate, sulfur dioxide, nitrogen oxides, volatile organic compounds, and carbon monoxide before air pollution control devices, such as uncontrolled emissions, would each be less than five tons per year, whose potential emissions of all hazardous air pollutants would be below their lesser quantity cutoff emission rate, and none of whose sources would violate an applicable emissions standard;

(iii) any source that only emits hazardous air pollutants that are not also a particulate or a volatile organic compound and whose potential emissions of hazardous air pollutants are below their lesser quantity cutoff emission rates; or

(iv) any incinerator covered under Subparagraph (c)(4) of Rule 15A NCAC 02D .1201;

(F) case-by-case exemption: activities that the applicant demonstrates to the satisfaction of the Director:

(i) to be negligible in their air quality impacts;

(ii) not to have any air pollution control device; and

(iii) not to violate any applicable emission control standard when operating at maximum design capacity or maximum operating rate, whichever is greater.

(d) An activity that is exempt from the permit or permit modification process is not exempted from other applicable requirements. The owner or operator of the source is not exempt from demonstrating compliance with any applicable requirement.

(e) Emissions from stationary source activities identified in Paragraph (c) of this Rule shall be included in determining compliance with the toxic air pollutant requirements under 15A NCAC 02D .1100 or 02Q .0700 according to Rule 15A NCAC 02Q .0702 (exemptions from air toxic permitting).

(f) The owner or operator of a facility or source claiming an exemption under Paragraph (c) of this Rule shall provide the Director documentation upon request that the facility or source is qualified for that exemption.

(g) If the Director finds that an activity exempted under Paragraph (c) of this Rule is in violation of or has violated a rule in 15A NCAC 02D, he shall revoke the permit exemption for that activity and require that activity to be permitted under this Subchapter if necessary to obtain or maintain compliance.

History Note: *Authority G.S. 143-215.3(a)(1); 143-215.107(a)(4); 143-215.108;*
Temporary Adoption Eff. March 8, 1994 for a period of 180 days or until the permanent rule becomes effective, whichever is sooner;
Eff. July 1, 1994;
Amended Eff. April 1, 1999; July 1, 1998; July 1, 1997; November 1, 1996;
Temporary Amendment Eff. December 1, 1999;
Amended Eff. May 1, 2013; January 1, 2009; July 1, 2007; June 29, 2006; July 18, 2002; July 1, 2000.

Air Quality
ENVIRONMENTAL QUALITY

PAT MCCRORY
Governor

DONALD R. VAN DER VAART
Secretary

SHEILA C. HOLMAN
Director

January 20, 2016

Ms. Sara Ethier
Corporate Env. Management Director
G&K Services, Co. - Graham Plant
5995 Opus Parkway
Suite 500
Minnetonka, MN 55343

Subject: Air Permit No. 10141R03
G&K Services, Co. - Graham Plant
Graham, Alamance County, North Carolina
Permit Class: Synthetic Minor
Facility ID# 0100301

Dear Ms. Ethier:

In accordance with your completed application received November 24, 2015, we are forwarding herewith Permit No. 10141R03 to G&K Services, Co. - Graham Plant, Graham, Alamance County, North Carolina for the construction and operation of air emissions sources or air cleaning devices and appurtenances. Additionally, any emissions activities determined from your air permit application as meeting the exemption requirements contained in 15A NCAC 2Q .0102 have been listed for information purposes as an "ATTACHMENT" to the enclosed air permit. Please note the records retention requirements are contained in General Condition 2 of the General Conditions and Limitations.

If any parts, requirements, or limitations contained in this permit are unacceptable to you, you have the right to request a formal adjudicatory hearing within 30 days following receipt of this permit, identifying the specific issues to be contested. Such a request will stay the effectiveness of the entire permit. This hearing request must be in the form of a written petition, conforming to G.S. 150B-23 of the North Carolina General Statutes, and filed with the Office of Administrative Hearings, 6714 Mail Service Center, Raleigh, NC 27699-6714. The form for requesting a formal adjudicatory hearing may be obtained upon request from the Office of Administrative Hearings. Unless a request for a hearing is made pursuant to G.S. 150B-23, this air permit shall be final and binding.

You may request modification of your air permit through informal means pursuant to G.S. 150B-22. This request must be submitted in writing to the Director and must identify the specific provisions or issues for which the modification is sought. Please note that the permit will become final and binding regardless of a request for informal modification unless a request for a hearing is also made under G.S. 150B-23.

Unless exempted by a condition of this permit or the regulations, construction of new air pollution sources or air cleaning devices, or modifications to the sources or air cleaning devices described in this permit must be covered under a permit issued by the Division of Air Quality prior to construction. Failure to do so is a violation of G.S. 143-215.108 and may subject the Permittee to civil or criminal penalties as described in G.S. 143-215.114A and 143-215.114B.

This permit shall be effective from January 20, 2016 until December 31, 2023, is nontransferable to future owners and operators, and shall be subject to the conditions and limitations as specified therein.

The following changes have been made to the permit stipulations:

- **The wording of Condition A.9 has changed slightly, but the requirements are the same.**
- **The permit term has been changed from five years to eight years per NC General Statute 143-215.108 (d1).**

The Permittee is responsible for carefully reading the entire permit and evaluating the requirements of each permit stipulation. The Permittee shall comply with all terms, conditions, requirements, limitations and restrictions set forth in this permit. Noncompliance with any permit condition is grounds for enforcement action, for permit termination, revocation and reissuance, or modification, or for denial of a permit renewal application.

Should you have any questions concerning this matter, please contact Taylor Hartsfield at 336-776-9639.

Sincerely,

Lisa Edwards

Lisa Edwards, P.E., Regional Supervisor
Division of Air Quality, NC DEQ

MTH
Enclosures

c: Winston-Salem Regional Office

NORTH CAROLINA ENVIRONMENTAL MANAGEMENT COMMISSION

DEPARTMENT OF ENVIRONMENTAL QUALITY

DIVISION OF AIR QUALITY

AIR PERMIT NO. 10141R03

Issue Date: January 20, 2016
Expiration Date: December 31, 2023

Effective Date: January 20, 2016
Replaces Permit: 10141R02

To construct and operate air emission source(s) and/or air cleaning device(s), and for the discharge of the associated air contaminants into the atmosphere in accordance with the provisions of Article 21B of Chapter 143, General Statutes of North Carolina (NCGS) as amended, and other applicable Laws, Rules and Regulations,

G&K Services, Co. - Graham Plant
610 Woody Drive
Graham, Alamance County, North Carolina
Permit Class: Synthetic Minor
Facility ID# 0100301

(the Permittee) is hereby authorized to construct and operate the air emissions sources and/or air cleaning devices and appurtenances described below:

Emission Source ID	Emission Source Description	Control System ID	Control System Description
ES-DRYER1, ES-DRYER2	Two (2) natural gas-fired industrial dryers (2.5 million Btu/hr max heat input, indirect-fired; 660 lbs clean, dry batch process weight, each)	N/A	N/A
ES-DRYER3, ES-DRYER4	Two (2) natural gas-fired industrial dryers (0.30 million Btu/hr max heat input, indirect-fired; 125 lbs clean, dry batch process weight, each)	N/A	N/A
ES-DRYER5	Natural gas-fired industrial dryer (2.8 million Btu/hr max heat input, indirect-fired; 700 lbs clean, dry batch process weight)	N/A	N/A
ES-WASHR1, ES-WASHR2, ES-WASHR3, ES-WASHR4, ES-WASHR5, ES-WASHR6	Six (6) industrial washers (700 lbs clean, dry batch process weight, each)	N/A	N/A
ES-WASHR9	Industrial washer (250 lbs clean, dry batch process weight)	N/A	N/A
ES-WASHR10	Industrial washer (150 lbs clean, dry batch process weight)	N/A	N/A

in accordance with the completed application 0100301.15A received November 24, 2015 including any plans, specifications, previous applications, and other supporting data, all of which are filed with the Department of Environmental Quality, Division of Air Quality (DAQ) and are incorporated as part of this permit.

This permit is subject to the following specified conditions and limitations including any TESTING, REPORTING, OR MONITORING REQUIREMENTS:

A. SPECIFIC CONDITIONS AND LIMITATIONS

1. Any air emission sources or control devices authorized to construct and operate above must be operated and maintained in accordance with the provisions contained herein. The Permittee shall comply with applicable Environmental Management Commission Regulations, including Title 15A North Carolina Administrative Code (NCAC), Subchapter 2D .0202, 2D .0503, 2D .0516, 2D .0521, 2D .0535, 2D .0540, 2D .1806, 2Q .0315, 2Q .0317 (Avoidance) and 2Q .0711.

2. PERMIT RENEWAL AND EMISSION INVENTORY REQUIREMENT - The Permittee, at least 90 days prior to the expiration date of this permit, shall request permit renewal by letter in accordance with 15A NCAC 2Q .0304(d) and (f). Pursuant to 15A NCAC 2Q .0203(i), no permit application fee is required for renewal of an existing air permit (without a modification request). The renewal request (with AA application form) should be submitted to the Regional Supervisor, DAQ. Also, at least 90 days prior to the expiration date of this permit, the Permittee shall submit the air pollution emission inventory report (with Certification Sheet) in accordance with 15A NCAC 2D .0202, pursuant to N.C. General Statute 143 215.65. The report shall be submitted to the Regional Supervisor, DAQ and shall document air pollutants emitted for the 2022 calendar year.

3. PARTICULATE CONTROL REQUIREMENT - As required by 15A NCAC 2D .0503 "Particulates from Fuel Burning Indirect Heat Exchangers," particulate matter emissions from the fuel burning indirect heat exchangers shall not exceed the allowable emission rates listed below:

Source	Emission Limit (lbs/million Btu)
Two (2) natural gas-fired industrial dryers (2.5 million Btu/hr max heat input, indirect-fired; 660 lbs clean, dry batch process weight, each) (ES-DRYER1 and ES-DRYER2)	0.487, each
Two (2) natural gas-fired industrial dryers (0.30 million Btu/hr max heat input, indirect-fired; 125 lbs clean, dry batch process weight, each) (ES-DRYER3 and ES-DRYER4)	0.487, each
Natural gas-fired industrial dryer (2.8 million Btu/hr max heat input, indirect-fired; 700 lbs clean, dry batch process weight) (ES-DRYER5)	0.472

4. SULFUR DIOXIDE CONTROL REQUIREMENT - As required by 15A NCAC 2D .0516 "Sulfur Dioxide Emissions from Combustion Sources," sulfur dioxide emissions from the combustion sources shall not exceed 2.3 pounds per million Btu heat input.

5. VISIBLE EMISSIONS CONTROL REQUIREMENT - As required by 15A NCAC 2D .0521 "Control of Visible Emissions," visible emissions from the emission sources, manufactured after July 1, 1971, shall not be more than 20 percent opacity when averaged over a six-minute period, except that six-minute periods averaging not more than 87 percent opacity may occur not more than once in any hour nor more than four times in any 24-hour period. However, sources which must comply with 15A NCAC 2D .0524 "New Source Performance Standards" or .1110 "National Emission Standards for Hazardous Air Pollutants" must comply with applicable visible emissions requirements contained therein.

6. NOTIFICATION REQUIREMENT - As required by 15A NCAC 2D .0535, the Permittee of a source of excess emissions that last for more than four hours and that results from a malfunction, a breakdown of process or control equipment or any other abnormal conditions, shall:

    a. Notify the Director or his designee of any such occurrence by 9:00 a.m. Eastern time of the Division's next business day of becoming aware of the occurrence and describe:

        i. the name and location of the facility,

        ii. the nature and cause of the malfunction or breakdown,

        iii. the time when the malfunction or breakdown is first observed,

        iv. the expected duration, and

        v. an estimated rate of emissions.

    b. Notify the Director or his designee immediately when the corrective measures have been accomplished.

    This reporting requirement does not allow the operation of the facility in excess of Environmental Management Commission Regulations.

7. FUGITIVE DUST CONTROL REQUIREMENT - As required by 15A NCAC 2D .0540 "Particulates from Fugitive Dust Emission Sources," the Permittee shall not cause or allow fugitive dust emissions to cause or contribute to substantive complaints or excess visible emissions beyond the property boundary. If substantive complaints are received or excessive fugitive dust emissions from the facility are observed beyond the property boundaries for six minutes in any one hour (using Reference Method 22 in 40 CFR, Appendix A), the owner or operator may be required to submit a fugitive dust plan as described in 2D .0540(f).

    "Fugitive dust emissions" means particulate matter that does not pass through a process stack or vent and that is generated within plant property boundaries from activities such as: unloading and loading areas, process areas stockpiles, stock pile working, plant parking lots, and plant roads (including access roads and haul roads).

8. CONTROL AND PROHIBITION OF ODOROUS EMISSIONS - As required by 15A NCAC 2D .1806 "Control and Prohibition of Odorous Emissions" the Permittee shall not operate the facility without implementing management practices or installing and operating odor control equipment sufficient to prevent odorous emissions from the facility from causing or contributing to objectionable odors beyond the facility's boundary.

9. LIMITATION TO AVOID 15A NCAC 2Q .0501 - Pursuant to 15A NCAC 2Q .0315 "Synthetic Minor Facilities," to avoid the applicability of 15A NCAC 2Q .0501 "Purpose of Section and Requirement for a Permit," as requested by the Permittee, facility-wide emissions shall be less than the following:

Pollutant	Emission Limit (Tons per consecutive 12-month period)
VOC	100
Individual HAPs	10
Total HAPs	25

   a. Recordkeeping Requirements

      i. The Permittee shall record monthly and total annually the following:

         A. The amounts (in pounds) and types of textiles washed at this facility.

         B. The facility-wide VOC, individual HAP, and total HAP emissions.

            1. Calculations shall be based on the emission factors submitted with Application No. 0100301.13A.

      ii. The facility shall keep each record on file for a minimum of three (3) years.

   b. Reporting Requirements - Within 30 days after each calendar year, regardless of the actual emissions, the Permittee shall submit the following:

      i. Emissions and/or operational data listed below. The data should include monthly and 12 month totals for the previous 12 month period.

         A. The facility-wide VOC, individual HAP, and total HAP emissions.

10. LIMITATION TO AVOID 15A NCAC 2D .0530 "PREVENTION OF SIGNIFICANT DETERIORATION" - In accordance with 15A NCAC 2Q .0317, to comply with this permit and avoid the applicability of 15A NCAC 2D .0530 "Prevention of Significant Deterioration," as requested by the Permittee, emissions shall be limited as follows:

Affected Source(s)	Pollutant	Emission Limit (Tons Per Consecutive 12-month Period)
Facility-wide	VOC, total	250

11. TOXIC AIR POLLUTANT EMISSIONS LIMITATION REQUIREMENT - Pursuant to 15A NCAC 2Q .0711 "Emission Rates Requiring a Permit," for each of the below listed toxic air pollutants (TAPs), the Permittee has made a demonstration that facility-wide actual emissions, where one or more emission release points are obstructed or non-vertically oriented, do not exceed the Toxic Permit Emission Rates (TPERs) listed in 15A NCAC 2Q .0711(a). The facility shall be operated and maintained in such a manner that emissions of any listed TAPs from the facility, including fugitive emissions, will not exceed TPERs listed in 15A NCAC 2Q .0711(a).

    a. A permit to emit any of the below listed TAPs shall be required for this facility if actual emissions from all sources will become greater than the corresponding TPERs.

    b. PRIOR to exceeding any of these listed TPERs, the Permittee shall be responsible for obtaining a permit to emit TAPs and for demonstrating compliance with the requirements of 15A NCAC 2D .1100 "Control of Toxic Air Pollutants".

    c. In accordance with the approved application, the Permittee shall maintain records of operational information demonstrating that the TAP emissions do not exceed the TPERs as listed below:

Pollutant	Carcinogens (lb/yr)	Chronic Toxicants (lb/day)	Acute Systemic Toxicants (lb/hr)	Acute Irritants (lb/hr)
Ethylene dichloride (1,2-dichloroethane) (107-06-2)	260			
Hexane, n- (110-54-3)		23		
MEK (methyl ethyl ketone, 2-butanone) (78-93-3)		78		22.4
MIBK (methyl isobutyl ketone) (108-10-1)		52		7.6
Methylene chloride (75-09-2)	1600		0.39	
Perchloroethylene (tetrachloroethylene) (127-18-4)	13000			
TCE (trichloroethylene) (79-01-6)	4000			
Toluene (108-88-3)		98		14.4
Xylene (mixed isomers) (1330-20-7)		57		16.4

B. GENERAL CONDITIONS AND LIMITATIONS

1. In accordance with G.S. 143-215.108(c)(1), TWO COPIES OF ALL DOCUMENTS, REPORTS, TEST DATA, MONITORING DATA, NOTIFICATIONS, REQUESTS FOR RENEWAL, AND ANY OTHER INFORMATION REQUIRED BY THIS PERMIT shall be submitted to the:

   Regional Supervisor
   North Carolina Division of Air Quality
   Winston-Salem Regional Office
   450 West Hanes Mill Road
   Suite 300
   Winston-Salem, NC 27105
   336-776-9800

   For identification purposes, each submittal should include the facility name as listed on the permit, the facility identification number, and the permit number.

2. RECORDS RETENTION REQUIREMENT - In accordance with 15A NCAC 2D .0605, any records required by the conditions of this permit shall be kept on site and made available to DAQ personnel for inspection upon request. These records shall be maintained in a form suitable and readily available for expeditious inspection and review. These records must be kept on site for a minimum of 2 years, unless another time period is otherwise specified.

3. ANNUAL FEE PAYMENT - Pursuant to 15A NCAC 2Q .0203(a), the Permittee shall pay the annual permit fee within 30 days of being billed by the DAQ. Failure to pay the fee in a timely manner will cause the DAQ to initiate action to revoke the permit.

4. EQUIPMENT RELOCATION - In accordance with 15A NCAC 2Q .0301, a new air permit shall be obtained by the Permittee prior to establishing, building, erecting, using, or operating the emission sources or air cleaning equipment at a site or location not specified in this permit.

5. REPORTING REQUIREMENT - In accordance with 15A NCAC 2Q .0309, any of the following that would result in previously unpermitted, new, or increased emissions must be reported to the Regional Supervisor, DAQ:

   a. changes in the information submitted in the application regarding facility emissions;

   b. changes that modify equipment or processes of existing permitted facilities; or

   c. changes in the quantity or quality of materials processed.

   If appropriate, modifications to the permit may then be made by the DAQ to reflect any necessary changes in the permit conditions. In no case are any new or increased emissions allowed that will cause a violation of the emission limitations specified herein.

6. In accordance with 15A NCAC 2Q .0309, this permit is subject to revocation or modification by the DAQ upon a determination that information contained in the application or presented in the support thereof is incorrect, conditions under which this permit was granted have changed, or violations of conditions contained in this permit have occurred. In accordance with G.S. 143-215.108(c)(1), the facility shall be properly operated and maintained at all times in a manner that will effect an overall reduction in air pollution. Unless otherwise specified by this permit, no emission source may be operated without the concurrent operation of its associated air cleaning device(s) and appurtenances.

7. In accordance with G.S. 143-215.108(c)(1), this permit is nontransferable by the Permittee. Future owners and operators must obtain a new air permit from the DAQ.

8. In accordance with G.S. 143-215.108(c)(1), this issuance of this permit in no way absolves the Permittee of liability for any potential civil penalties which may be assessed for violations of State law which have occurred prior to the effective date of this permit.

9. In accordance with G.S. 143-215.108(c)(1), this permit does not relieve the Permittee of the responsibility of complying with all applicable requirements of any Federal, State, or Local water quality or land quality control authority.

10. In accordance with 15A NCAC 2D .0605, reports on the operation and maintenance of the facility shall be submitted by the Permittee to the Regional Supervisor, DAQ at such intervals and in such form and detail as may be required by the DAQ. Information required in such reports may include, but is not limited to, process weight rates, firing rates, hours of operation, and preventive maintenance schedules.

11. A violation of any term or condition of this permit shall subject the Permittee to enforcement pursuant to G.S. 143-215.114A, 143-215.114B, and 143-215.114C, including assessment of civil and/or criminal penalties.

12. Pursuant to North Carolina General Statute 143-215.3(a)(2), no person shall refuse entry or access to any authorized representative of the DAQ who requests entry or access for purposes of inspection, and who presents appropriate credentials, nor shall any person obstruct, hamper, or interfere with any such representative while in the process of carrying out his official duties. Refusal of entry or access may constitute grounds for permit revocation and assessment of civil penalties.

13. In accordance with G.S. 143-215.108(c)(1), this permit does not relieve the Permittee of the responsibility of complying with any applicable Federal, State, or Local requirements governing the handling, disposal, or incineration of hazardous, solid, or medical wastes, including the Resource Conservation and Recovery Act (RCRA) administered by the Division of Waste Management.

14. PERMIT RETENTION REQUIREMENT - In accordance with 15A NCAC 2Q .0110, the Permittee shall retain a current copy of the air permit at the site. The Permittee must make available to personnel of the DAQ, upon request, the current copy of the air permit for the site.

15. CLEAN AIR ACT SECTION 112(r) REQUIREMENTS - Pursuant to 15A NCAC 2D .2100 "Risk Management Program," if the Permittee is required to develop and register a risk management plan pursuant to Section 112(r) of the Federal Clean Air Act, then the Permittee is required to register this plan with the USEPA in accordance with 40 CFR Part 68.

16. PREVENTION OF ACCIDENTAL RELEASES - GENERAL DUTY - Pursuant to Title I Part A Section 112(r)(1) of the Clean Air Act "Hazardous Air Pollutants - Prevention of Accidental Releases - Purpose and General Duty," although a risk management plan may not be required, if the Permittee produces, processes, handles, or stores any amount of a listed hazardous substance, the Permittee has a general duty to take such steps as are necessary to prevent the accidental release of such substance and to minimize the consequences of any release. **This condition is federally-enforceable only.**

17. GENERAL EMISSIONS TESTING AND REPORTING REQUIREMENTS - If emissions testing is required by this permit, or the DAQ, or if the Permittee submits emissions testing to the DAQ in support of a permit application or to demonstrate compliance, the Permittee shall perform such testing in accordance with 15A NCAC 2D .2600 and follow all DAQ procedures including protocol approval, regional notification, report submittal, and test results approval.

Permit issued this the 20th of January, 2016.
NORTH CAROLINA ENVIRONMENTAL MANAGEMENT COMMISSION

Lisa Edwards

Lisa Edwards, P.E.
Regional Supervisor
By Authority of the Environmental Management Commission

Air Permit No. 10141R03

ATTACHMENT to Permit No. 10141R03, January 20, 2016

Insignificant / Exempt Activities

Source ID	Source	Exemption Regulation	Source of TAPs?	Source of Title V Pollutants?
IES-STEAM2	Natural gas, direct-fired steam tunnel (1.5 million Btu per hour max heat input)	2Q .0102 (c)(2)(B)(ii)	Yes	Yes
IES-B1	Natural gas-fired boiler (16.738 million Btu per hour max heat input)			
IES-WTP1	Industrial wastewater treatment plant, including associated chemical storage tanks, process equipment, and wastewater storage tank	2Q .0102 (c)(1)(F)		

1. Because an activity is exempted from being required to have a permit or permit modification does not mean that the activity is exempted from an applicable requirement or that the owner or operator of the source is exempted from demonstrating compliance with any applicable requirement.

2. When applicable, emissions from stationary source activities identified above shall be included in determining compliance with the permit requirements for toxic air pollutants under 15A NCAC 2D .1100 "Control of Toxic Air Pollutants" or 2Q .0711 "Emission Rates Requiring a Permit."

3. Sample permit conditions showing the regulatory requirements for exempt sources subject to NESHAP, NSPS, and NCAC rules may be found here: http://www.ncair.org/permits/insig/

APPENDIX E

PCE Mass Calculations

Location	Top Depth (ft bgs)	Middle Depth (ft bgs)	Bottom Depth (ft bgs)	Thickness (ft)	Area (ft^2)	Volume (ft^3)	PCE Soil Concentration (mg/kg)	Mass PCE (kg)
MW-51	0	5	6.0	6.0	24	144.0	910	6.42
MW-51	6.00	7	9.3	3.3	24	78.0	327	1.25
MW-51	9.25	11.5	13.0	3.8	24	90.0	2410	10.62
MW-51	13.00	14.5	17.0	4.0	24	96.0	564	2.65
MW-51	17.00	19.5	21.0	4.0	24	96.0	140	0.66
MW-51	21.00	22.5	25.0	4.0	24	96.0	99	0.47
MW-51	25.00	27.5	30.0	5.0	24	120.0	0.881	0.01
MW-52	0.00	11	12.5	12.5	41	512.5	3.27	0.08
MW-52	12.50	14	15.5	3.0	41	123.0	4.94	0.03
MW-53	0.00	4	8.0	8.0	41	328.0	2.57	0.04
MW-53	8.00	12	15.8	7.8	41	317.8	1.59	0.02
MW-53	15.75	19.5	23.3	7.5	41	307.5	9.8	0.15
MW-54		16		0.0	125	0.0	0	0.00
SB-101	0	2	4	4.00	81	324.00	2.01	0.03
SB-101	4	6	8	4.00		0.00	337	0.00
SB-101	4	6	8	4.00		0.00	788	0.00
SB-101	4	6	8	4.00	81	324.00	2120	33.63
SB-101	4	6	8	4.00		0.00	144	0.00
SB-101	9	9	9	0.00		0.00	2510	0.00
SB-101	8	10	12	4.00		0.00	6050	0.00
SB-101	8	10	12	4.00		0.00	830	0.00
SB-101	8	10	12	4.00		0.00	5740	0.00
SB-101	8	10	12	4.00	81	324.00	8310	131.84
SB-101	12	14	16	4.00		0.00	1430	0.00
SB-101	12	14	16	4.00	81	324.00	10800	171.34
SB-101	12	14	16	4.00		0.00	4050	0.00
SB-101	12	14	16	4.00		0.00	3020	0.00
SB-101	16	18	20	4.00		0.00	4370	0.00
SB-101	16	18	20	4.00	81	324.00	19700	312.54
SB-102	4	6	8	4.00	116	464.00	21100	479.39
SB-102	4	6	8	4.00		0.00	8.42	0.00
SB-102	8	10	12	4.00	116	464.00	223	5.07
SB-102	12	14	16	4.00		0.00	0.151	0.00
SB-102	12	14	16	4.00	116	464.00	1.6	0.04
SB-103	0	2	4	4.00	68	272.00	10.1	0.13
SB-103	0	2	4	4.00		0.00	1.69	0.00
SB-103	0	2	4	4.00		0.00	6.17	0.00
SB-103	0	2	4	4.00		0.00	1.77	0.00
SB-103	4	6	8	4.00	68	272.00	5	0.07
SB-103	4	6	8	4.00		0.00	2.58	0.00
SB-103	8	9	10	2.00		0.00	0.0852	0.00
SB-103	8	9	10	2.00	68	136.00	3.28	0.02
SB-104	0	2	4	4.00		0.00	112	0.00
SB-104	0	2	4	4.00		0.00	40.7	0.00
SB-104	0	2	4	4.00		0.00	9.05	0.00
SB-104	0	2	4	4.00	93	372.00	159	2.90
SB-104	4	6	8	4.00		0.00	504	0.00
SB-104	4	6	8	4.00	93	372.00	794	14.46
SB-104	8	8.5	9	1.00	93	93.00	1380	6.28
SB-105	0	2	4	4.00	105	420.00	130	2.67
SB-105	2	3	4	2.00	105	210.00	10800	111.05
SB-105	2	3	4	2.00		0.00	1790	0.00
SB-105	4	6	8	4.00		0.00	2710	0.00
SB-105	4	6	8	4.00	105	420.00	4330	89.05
SB-105	8	9	10	2.00		0.00	105	0.00
SB-105	8	9	10	2.00	105	210.00	571	5.87
SB-106	2	3	4	2.00	151	302.00	19.2	0.28
SB-106	4	6	8	4.00	151	604.00	5.18	0.15
SB-106	4	6	8	4.00		0.00	0.71	0.00
SB-106	8	8.5	9	1.00	151	151.00	0.073	0.00
SB-107	2	3	4	2.00	113	226.00	3.04	0.03
SB-107	4	6	8	4.00		0.00	0.0462	0.00
SB-107	4	6	8	4.00	113	452.00	1.06	0.02
SB-107	8	8.5	9	1.00	113	113.00	0.0657	0.00
SB-108	2	3	4	2.00	125	250.00	0.375	0.00
SB-108	4	6	8	4.00	125	500.00	2650	64.88
SB-108	4	6	8	4.00		0.00	1.66	0.00
SB-108	8	10	12	4.00	125	500.00	6.73	0.16
SB-108	8	10	12	4.00		0.00	5.48	0.00
SB-109	2	3	4	2.00	120	240.00	2.14	0.03
SB-109	4	6	8	4.00		0.00	0.411	0.00
SB-109	4	6	8	4.00	120	480.00	0.754	0.02
SB-109	8	10	12	4.00	120	480.00	0.145	0.00
SB-109	12	12.8	13.5	1.50	120	180.00	0.0229	0.00
SVE-1	0.00	6	6.0	6.0	20	120.0	5.7	0.03
VMP-1	0.00	3.5	4.5	4.5	47	211.5	17,400	180.20
VMP-1	4.50	5.5	6.5	2.0	47	94.0	436	2.01
VMP-2	0.00	7	7.0	7.0	107	749.0	381	13.97
VMP-3	0.00	4	8.0	8.0	41	328.0	5360	86.08
VMP-4	0.00	4	7.0	7.0	107	749.0	12,600	462.10
VMP-4	7.00	10	13.0	6.0	107	642.0	9350	293.92
								2493

Assumptions	
Porosity (*n*)	0.35
Soil Particle Density (kg/m^3)	2660
Dry Bulk Density (kg/m^3)	1729
Dry Bulk Density (lb/ft^3)	107.9

$$Mass\ PCE\ removed\ from\ individual\ borehole\ area\ (kg) = \frac{Volume\ (m^3) \times PCE\ Soil\ Concentration\ \left(\frac{mg}{kg}\right) \times (1 - porosity) \times Soil\ Particle\ Density\ \left(\frac{kg}{m^3}\right)}{1 * 10^{-6}\ \left(\frac{mg}{kg}\right)}$$

Notes:
(1) Rows highlighted in grey were not included in total PCE mass calculations; highest PCE concentrations were used in the case of duplicate samples
(2) Depth represents depth below ground surface
(3) Area for each borehole location and associated PCE soil concentration was calculated based on distances from surrounding boreholes
(4) PCE soil concentrations were taken from Geosyntec's 2016 Source Area Investigation Report

PCE Mass Calculations
G&K Graham SVE System

Constants and Conversions:

- Soil Density = 2,660 kg/m^3
- Dry Bulk Soil Density = 1,729 kg/m^3
- Water Density = 1,000 kg/m^3
- Assumed Porosity = 0.35
- 1 m^3 = 35.315 ft^3
- 1 kg = 1,000,000,000 µg
- 1 kg = 2.20 lb

Vadose Zone PCE Mass Calculation:

Area of vadose zone PCE impacts:

The vadose zone treatment area has been defined as the volatile organic compound (VOC) source area located beneath the wash room operations of the G&K facility located in Graham, North Carolina. The vadose zone treatment area was calculated as the sum of the individual areas surrounding previously sampled borehole locations in the source area.

Thickness of vadose zone PCE impacts:

The thickness of VOC contamination in the source area vadose zone was variable as found by Geosyntec's previous source area investigation. For the purpose of performing tetrachloroethylene (PCE) mass calculations, the thickness was assumed to extend from 0 feet below ground surface (bgs) to either the deepest point to which soil samples were collected from a borehole or the deepest point at which PCE contamination was identified for a borehole.

PCE concentrations within the vadose zone:

Source area PCE soil concentrations were taken from Geosyntec's previous source area investigation report. For each available depth sampled, the reported PCE soil concentration at the given depth was used over a thickness equidistant between the prior and subsequent sample depths. For multiple soil samples collected from the same depth from a given borehole, the highest recorded PCE concentration was used for the total PCE mass calculation.

Treatment Mass (Vadose Zone):

The mass of PCE that can be removed from the source area by the SVE system was calculated based on PCE soil concentrations in the vadose zone using the following equations:

$$Mass\ PCE\ removed\ from\ individual\ borehole\ area\ (kg)$$
$$= \frac{Volume\ (m^3) \times PCE\ Soil\ Concentration\ \left(\frac{mg}{kg}\right) \times (1 - porosity) \times Soil\ Particle\ Density\ (\frac{kg}{m^3})}{1 * 10^{-6}\ \left(\frac{mg}{kg}\right)}$$

$$Total\ Mass\ PCE\ removed\ from\ source\ area\ (kg)$$
$$= \sum Mass\ PCE\ removed\ from\ indivdual\ borehole\ area\ (kg)$$
$$= \mathbf{3,000\ kg \times 2.20 \frac{lb}{kg} = 6,615 lbs \times 0.0005\ \frac{tons}{lb} = 3.31\ tons}$$

Note: Total PCE mass estimate was rounded up from 2,493 kg to 3,000 kg