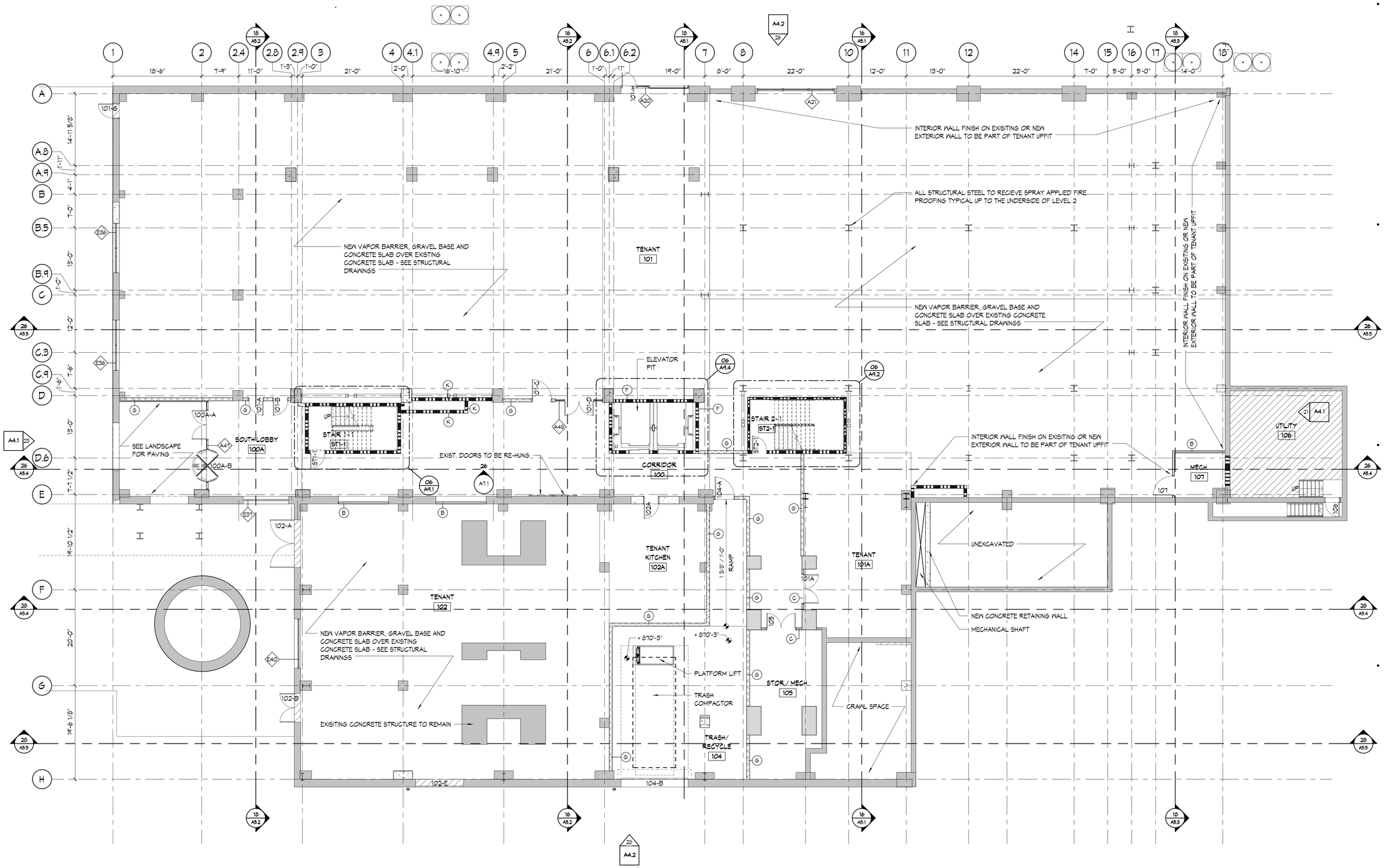

27 LEVEL 1 PLAN
1/8" = 1'-0"

PLAN LEGEND

- NEW CONCRETE SLAB - SEE STRUCTURAL DRAWINGS
- INDICATES EXISTING CONCRETE SLAB TO REMAIN

GENERAL PLAN NOTES

PATCH & REPAIR ALL HOLES IN EXTERIOR WALLS WITH MATERIALS TO MATCH EXISTING.

PREP ALL EXISTING INTERIOR SURFACES TO RECIEVE PAINT OR OTHER NEW SURFACE COATINGS BY SCRAPING & PRESSURE WASHING TO THE EXTENT THAT NEW FINISHES WILL ADHERE TO EXISTING SURFACES.

PREP EXISTING STL. WINDOW FRAMES TO RECIEVE NEW GLASS & GLAZING & AS REQUIRED TO APPLY NEW PAINT FINISH. VERIFY OVERALL WINDOW SIZES & TRUE DIVIDED LIGHTS.

FIELD VERIFY EXISTING OPENINGS TO RECEIVE NEW WINDOWS OR WINDOW SYSTEMS.

walterrobbs
ARCHITECTURE + INTERIORS + PLANNING
530 NORTH TRADE STREET, SUITE 301
WINSTON-SALEM, NORTH CAROLINA 27101 P 336.725.1371

DESIGN DEVELOPMENT - NOT FOR CONSTRUCTION

Project:
BAILEY POWER PLANT RENOVATIONS & ADDITIONS

Sheet Title:
LEVEL 1 PLAN

Issue Date:
MAY 15, 2015

Revisions:

Project Number:
14-193

Sheet Number:
A2.1

As instruments of service these drawings and the design represented are the property of Walter Robbs Callahan & Pierce Architects, PA. Reproduction or use of these drawings other than for the project intended without the written consent from the architect is prohibited. Unauthorized use will be subject to legal action.

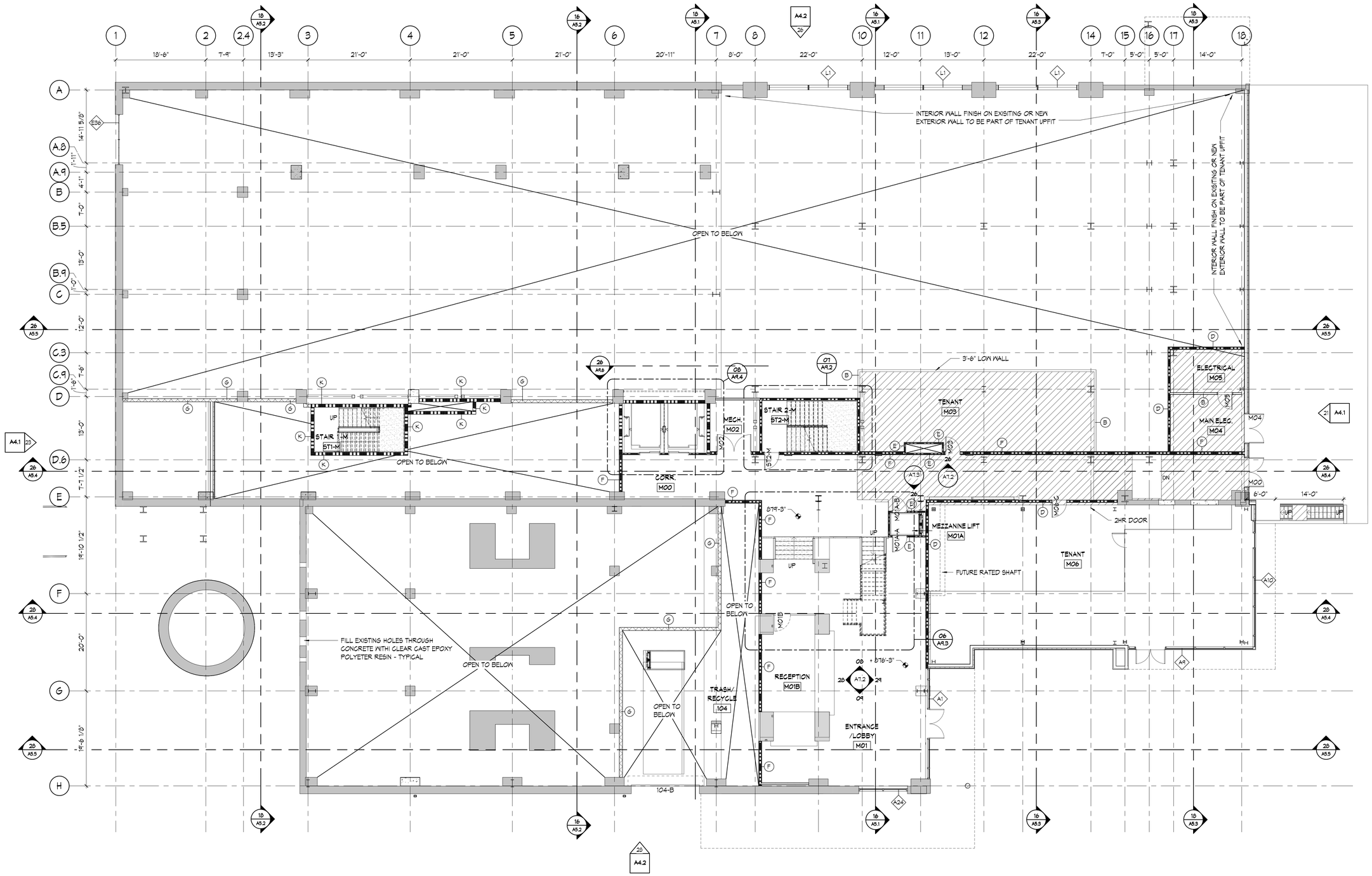

27 MEZZANINE PLAN
1/8" = 1'-0"

PLAN LEGEND

- NEW CONCRETE SLAB - SEE STRUCTURAL DRAWINGS
- INDICATES EXISTING CONCRETE SLAB TO REMAIN

GENERAL PLAN NOTES

PATCH & REPAIR ALL HOLES IN EXTERIOR WALLS WITH MATERIALS TO MATCH EXISTING.

PREP ALL EXISTING INTERIOR SURFACES TO RECIEVE PAINT OR OTHER NEW SURFACE COATINGS BY SCRAPING & PRESSURE WASHING TO THE EXTENT THAT NEW FINISHES WILL ADHERE TO EXISTING SURFACES.

PREP EXISTING STL. WINDOW FRAMES TO RECIEVE NEW GLASS & GLAZING & AS REQUIRED TO APPLY NEW PAINT FINISH. VERIFY OVERALL WINDOW SIZES & TRUE DIVIDED LIGHTS.

FIELD VERIFY EXISTING OPENINGS TO RECEIVE NEW WINDOWS OR WINDOW SYSTEMS.

walterrobbs
ARCHITECTURE + INTERIORS + PLANNING
530 NORTH TRADE STREET, SUITE 301
WINSTON-SALEM, NORTH CAROLINA 27101 P 336.725.1371

DESIGN DEVELOPMENT - NOT FOR CONSTRUCTION

Project:
BAILEY POWER PLANT RENOVATIONS & ADDITIONS

Sheet Title:
MEZZANINE LEVEL PLAN

Issue Date:
MAY 15, 2015

Revisions:

Project Number:
14-193

Sheet Number:
A2.2

As instruments of service these drawings and the design represented are the property of Walter Robbs Callahan & Pierce Architects, PA. Reproduction or use of these drawings other than for the project intended without the written consent from the architect is prohibited. Unauthorized use will be subject to legal action.

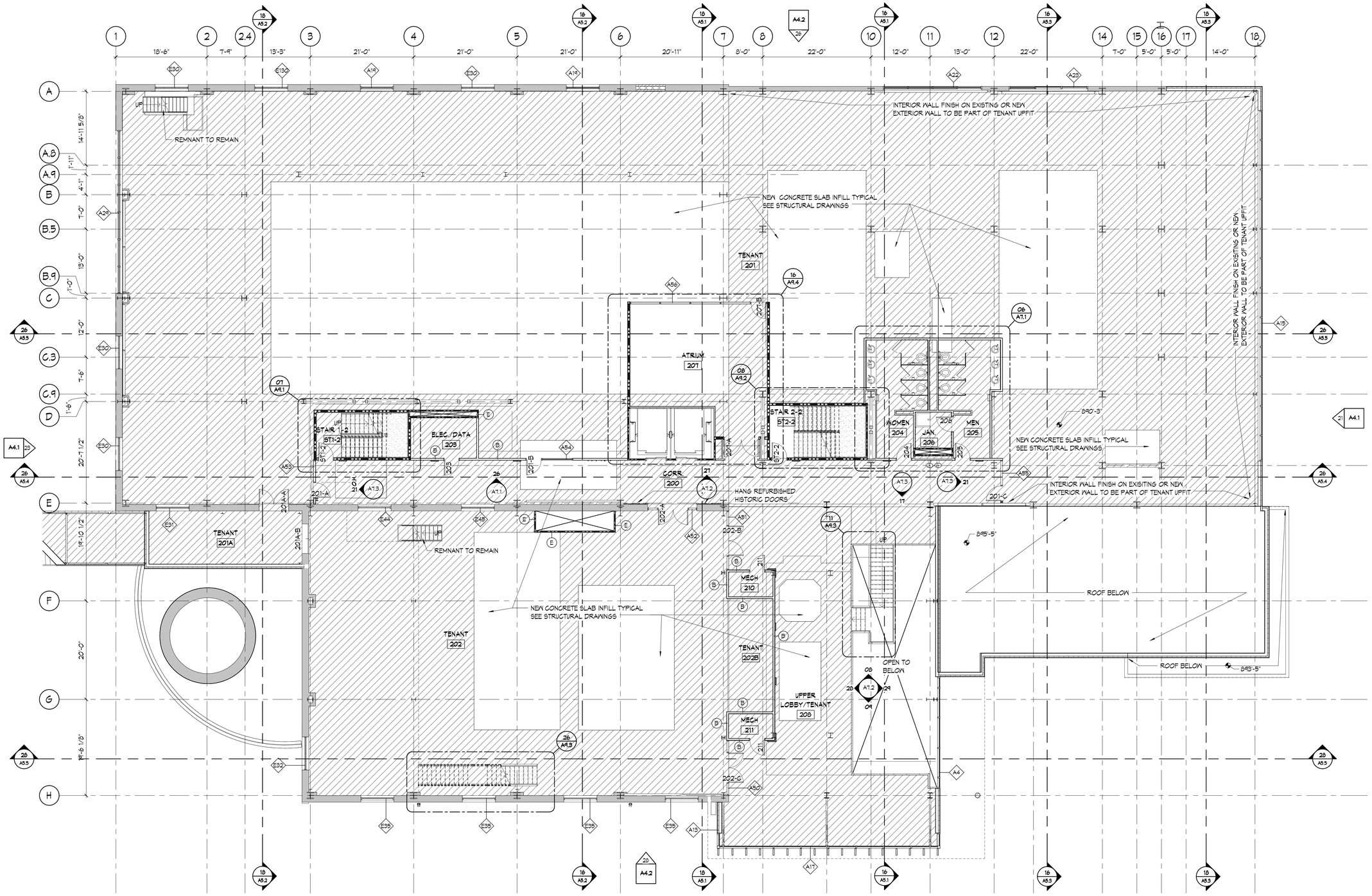

27 LEVEL 2 PLAN
1/8" = 1'-0"

PLAN LEGEND

- NEW CONCRETE SLAB - SEE STRUCTURAL DRAWINGS
- INDICATES EXISTING CONCRETE SLAB TO REMAIN

GENERAL PLAN NOTES

PATCH & REPAIR ALL HOLES IN EXTERIOR WALLS WITH MATERIALS TO MATCH EXISTING.

PREP ALL EXISTING INTERIOR SURFACES TO RECIEVE PAINT OR OTHER NEW SURFACE COATINGS BY SCRAPING & PRESSURE WASHING TO THE EXTENT THAT NEW FINISHES WILL ADHERE TO EXISTING SURFACES.

PREP EXISTING STL. WINDOW FRAMES TO RECIEVE NEW GLASS & GLAZING & AS REQUIRED TO APPLY NEW PAINT FINISH. VERIFY OVERALL WINDOW SIZES & TRUE DIVIDED LIGHTS.

FIELD VERIFY EXISTING OPENINGS TO RECEIVE NEW WINDOWS OR WINDOW SYSTEMS.

walterrobbs
ARCHITECTURE + INTERIORS + PLANNING
530 NORTH TRADE STREET, SUITE 301
WINSTON-SALEM, NORTH CAROLINA 27101 P 336.725.1371

DESIGN DEVELOPMENT - NOT FOR CONSTRUCTION

Project:
BAILEY POWER PLANT RENOVATIONS & ADDITIONS

Sheet Title:
LEVEL 2 PLAN

Issue Date:
MAY 15, 2015

Revisions:

Project Number:
14-193

Sheet Number:
A2.3

As instruments of service these drawings and the design represented are the property of Walter Robbs Callahan & Pierce Architects, PA. Reproduction or use of these drawings other than for the project intended without the written consent from the architect is prohibited. Unauthorized use will be subject to legal action.

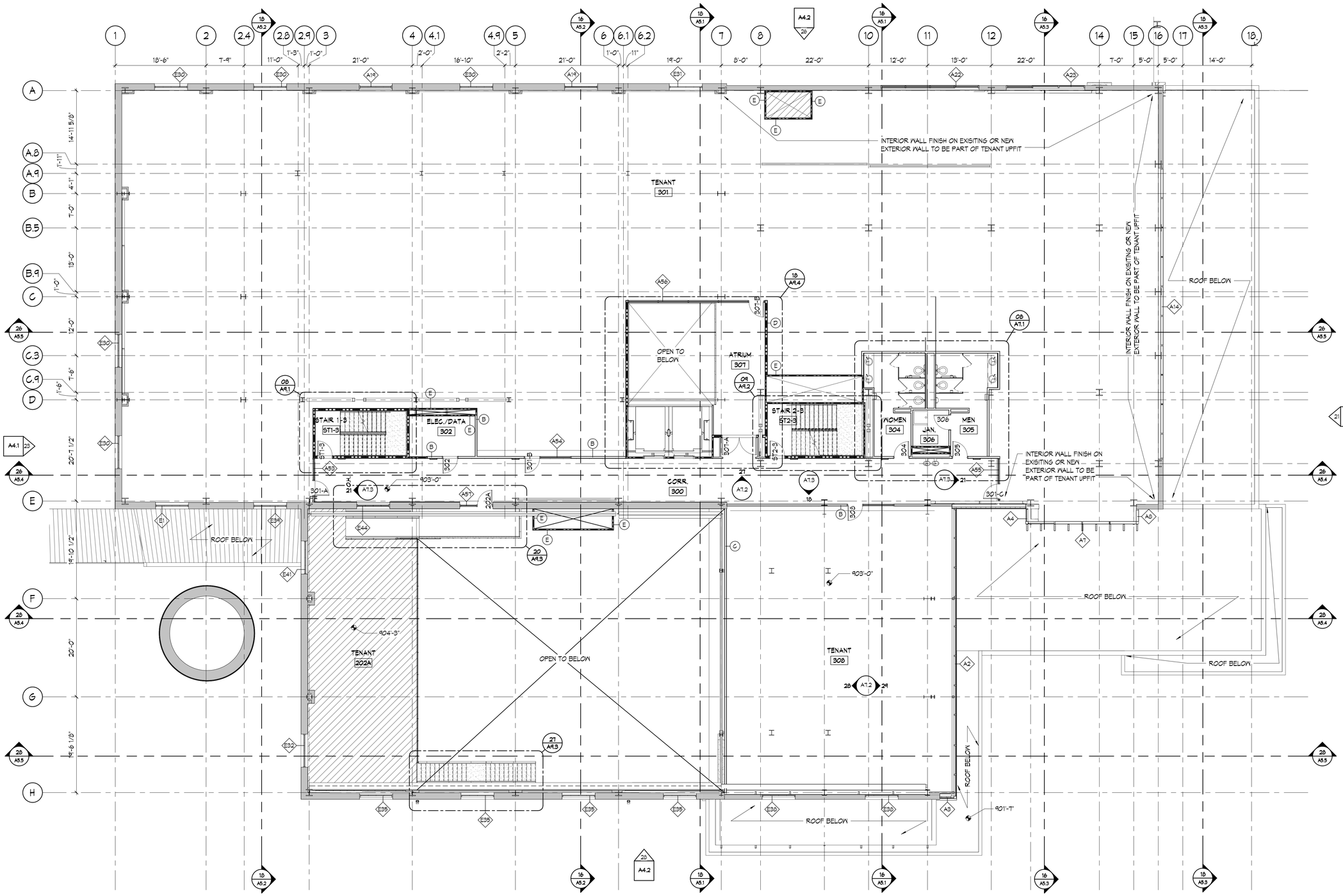

27 LEVEL 3 PLAN
1/8" = 1'-0"

PLAN LEGEND

NEW CONCRETE SLAB - SEE STRUCTURAL DRAWINGS

INDICATES EXISTING CONCRETE SLAB TO REMAIN

GENERAL PLAN NOTES

PATCH & REPAIR ALL HOLES IN EXTERIOR WALLS WITH MATERIALS TO MATCH EXISTING.

PREP ALL EXISTING INTERIOR SURFACES TO RECIEVE PAINT OR OTHER NEW SURFACE COATINGS BY SCRAPING & PRESSURE WASHING TO THE EXTENT THAT NEW FINISHES WILL ADHERE TO EXISTING SURFACES.

PREP EXISTING STL. WINDOW FRAMES TO RECIEVE NEW GLASS & GLAZING & AS REQUIRED TO APPLY NEW PAINT FINISH. VERIFY OVERALL WINDOW SIZES & TRUE DIVIDED LIGHTS.

FIELD VERIFY EXISTING OPENINGS TO RECEIVE NEW WINDOWS OR WINDOW SYSTEMS.

walterrobbs
ARCHITECTURE + INTERIORS + PLANNING
530 NORTH TRADE STREET, SUITE 301
WINSTON-SALEM, NORTH CAROLINA 27101 P 336.725.1371

DESIGN DEVELOPMENT - NOT FOR CONSTRUCTION

Project:
BAILEY POWER PLANT
RENOVATIONS & ADDITIONS

Sheet Title:
LEVEL 3 PLAN

Issue Date:
MAY 15, 2015

Revisions:

Project Number:
14-193

Sheet Number:
A2.4

As instruments of service these drawings and the design represented are the property of Walter Robbs Callahan & Pierce Architects, PA. Reproduction or use of these drawings other than for the project intended without the written consent from the architect is prohibited. Unauthorized use will be subject to legal action.

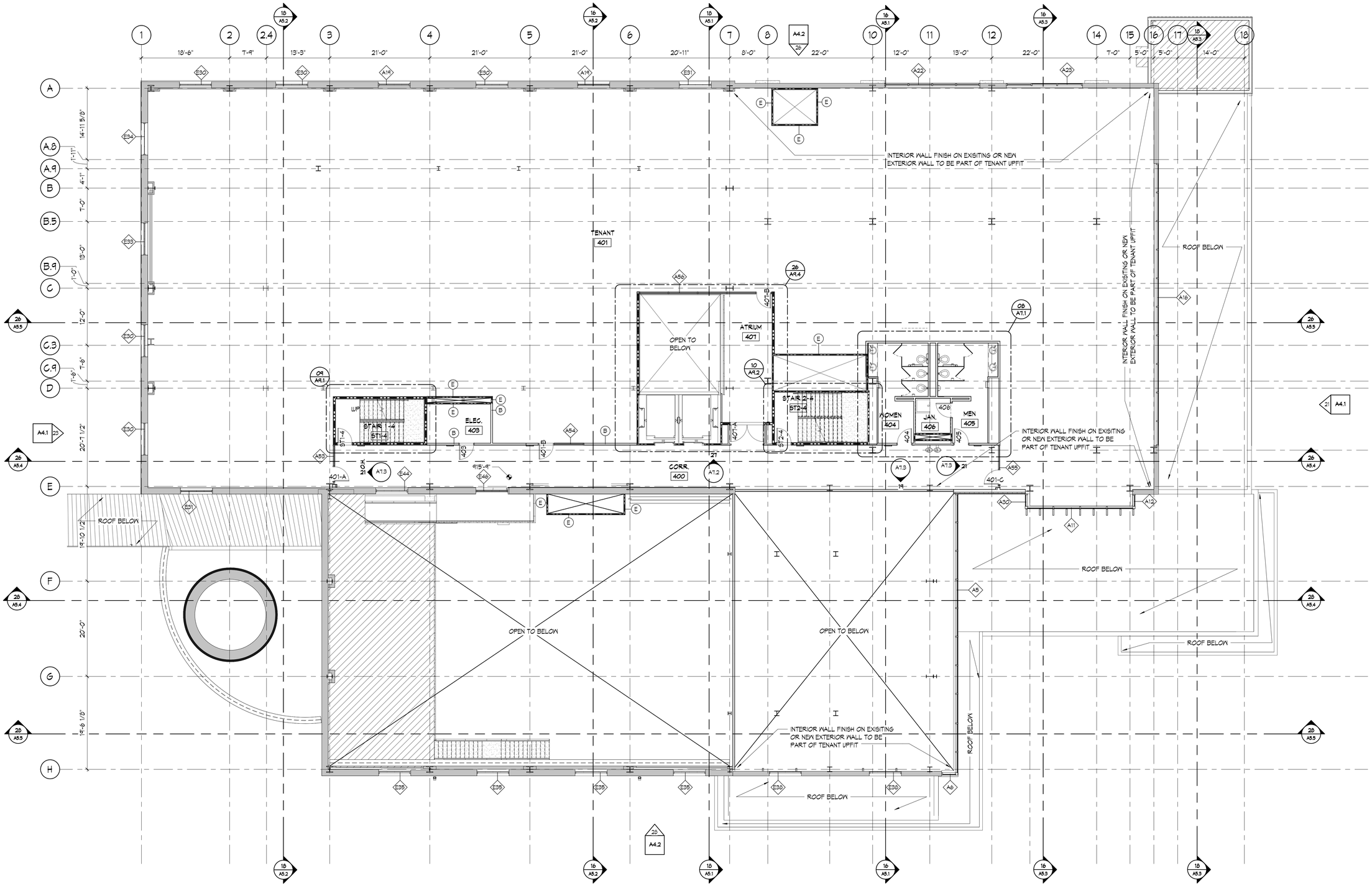

27 LEVEL 4 PLAN
1/8" = 1'-0"

PLAN LEGEND

- NEW CONCRETE SLAB - SEE STRUCTURAL DRAWINGS
- INDICATES EXISTING CONCRETE SLAB TO REMAIN

GENERAL PLAN NOTES

PATCH & REPAIR ALL HOLES IN EXTERIOR WALLS WITH MATERIALS TO MATCH EXISTING.

PREP ALL EXISTING INTERIOR SURFACES TO RECIEVE PAINT OR OTHER NEW SURFACE COATINGS BY SCRAPING & PRESSURE WASHING TO THE EXTENT THAT NEW FINISHES WILL ADHERE TO EXISTING SURFACES.

PREP EXISTING STL. WINDOW FRAMES TO RECIEVE NEW GLASS & GLAZING & AS REQUIRED TO APPLY NEW PAINT FINISH. VERIFY OVERALL WINDOW SIZES & TRUE DIVIDED LIGHTS.

FIELD VERIFY EXISTING OPENINGS TO RECEIVE NEW WINDOWS OR WINDOW SYSTEMS.

walterrobbs
ARCHITECTURE + INTERIORS + PLANNING
530 NORTH TRADE STREET, SUITE 301
WINSTON-SALEM, NORTH CAROLINA 27101 P 336.725.1371

DESIGN DEVELOPMENT - NOT FOR CONSTRUCTION

Project:
BAILEY POWER PLANT RENOVATIONS & ADDITIONS

Sheet Title:
LEVEL 4 PLAN

Issue Date:
MAY 15, 2015

Revisions:

Project Number:
14-193

Sheet Number:
A2.5

As instruments of service these drawings and the design represented are the property of Walter Robbs Callahan & Pierce Architects, PA. Reproduction or use of these drawings other than for the project intended without the written consent from the architect is prohibited. Unauthorized use will be subject to legal action.

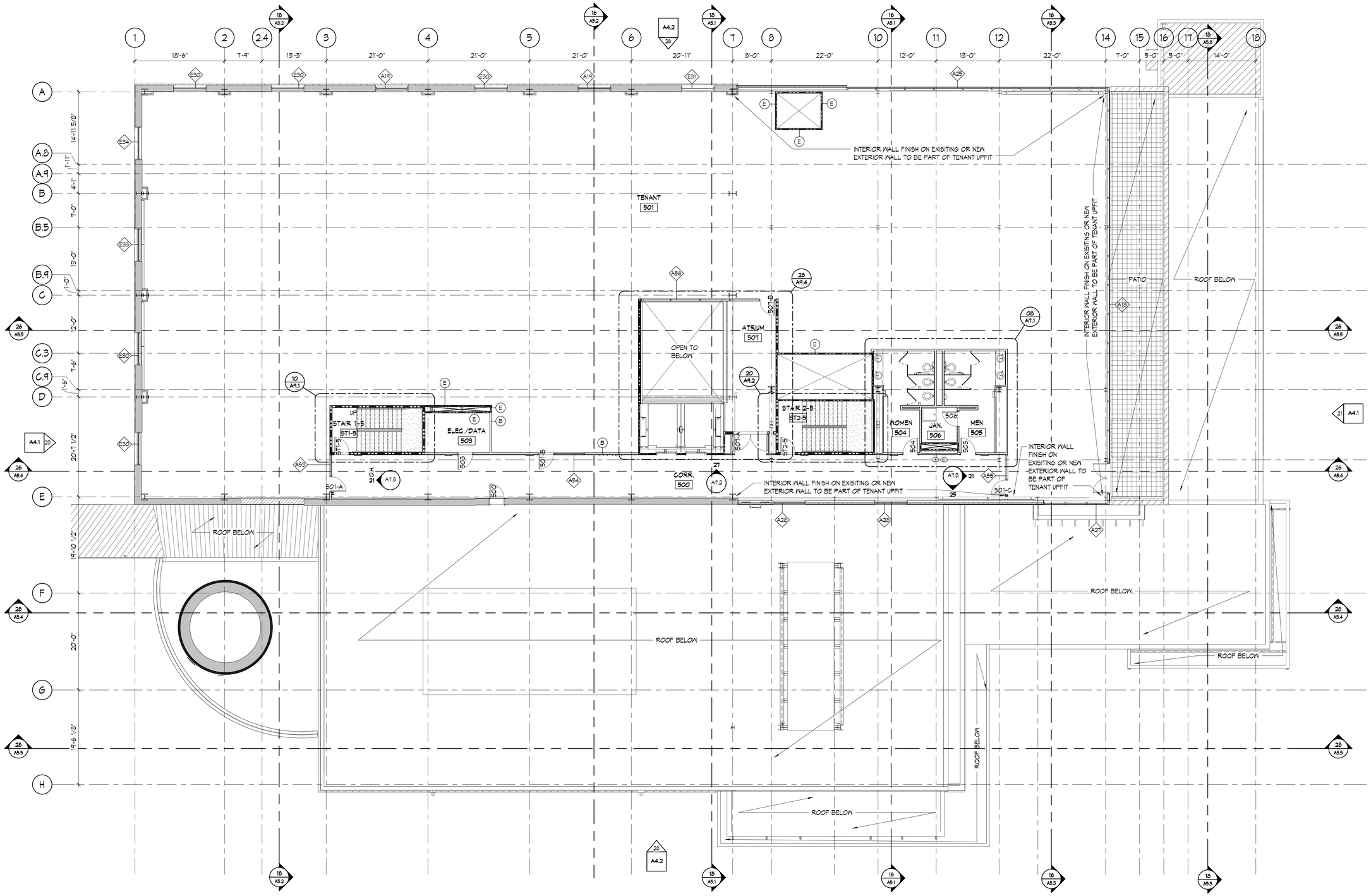

27 LEVEL 5 PLAN
1/8" = 1'-0"

PLAN LEGEND

- NEW CONCRETE SLAB - SEE STRUCTURAL DRAWINGS
- INDICATES EXISTING CONCRETE SLAB TO REMAIN

GENERAL PLAN NOTES

PATCH & REPAIR ALL HOLES IN EXTERIOR WALLS WITH MATERIALS TO MATCH EXISTING.

PREP ALL EXISTING INTERIOR SURFACES TO RECIEVE PAINT OR OTHER NEW SURFACE COATINGS BY SCRAPING & PRESSURE WASHING TO THE EXTENT THAT NEW FINISHES WILL ADHERE TO EXISTING SURFACES.

PREP EXISTING STL. WINDOW FRAMES TO RECIEVE NEW GLASS & GLAZING & AS REQUIRED TO APPLY NEW PAINT FINISH. VERIFY OVERALL WINDOW SIZES & TRUE DIVIDED LIGHTS.

FIELD VERIFY EXISTING OPENINGS TO RECEIVE NEW WINDOWS OR WINDOW SYSTEMS.

walterrobbs
ARCHITECTURE + INTERIORS + PLANNING
530 NORTH TRADE STREET, SUITE 301
WINSTON-SALEM, NORTH CAROLINA 27101 P 336.725.1371

DESIGN DEVELOPMENT - NOT FOR CONSTRUCTION

Project:
BAILEY POWER PLANT RENOVATIONS & ADDITIONS

Sheet Title:
LEVEL 5 PLAN

Issue Date:
MAY 15, 2015

Revisions:

Project Number:
14-193

Sheet Number:
A2.6

As instruments of service these drawings and the design represented are the property of Walter Robbs Callahan & Pierce Architects, PA. Reproduction or use of these drawings other than for the project intended without the written consent from the architect is prohibited. Unauthorized use will be subject to legal action.

NORTH DISTRICT OF THE PTRP
WINSTON-SALEM, NC

MASTER PLAN 04.28.2008

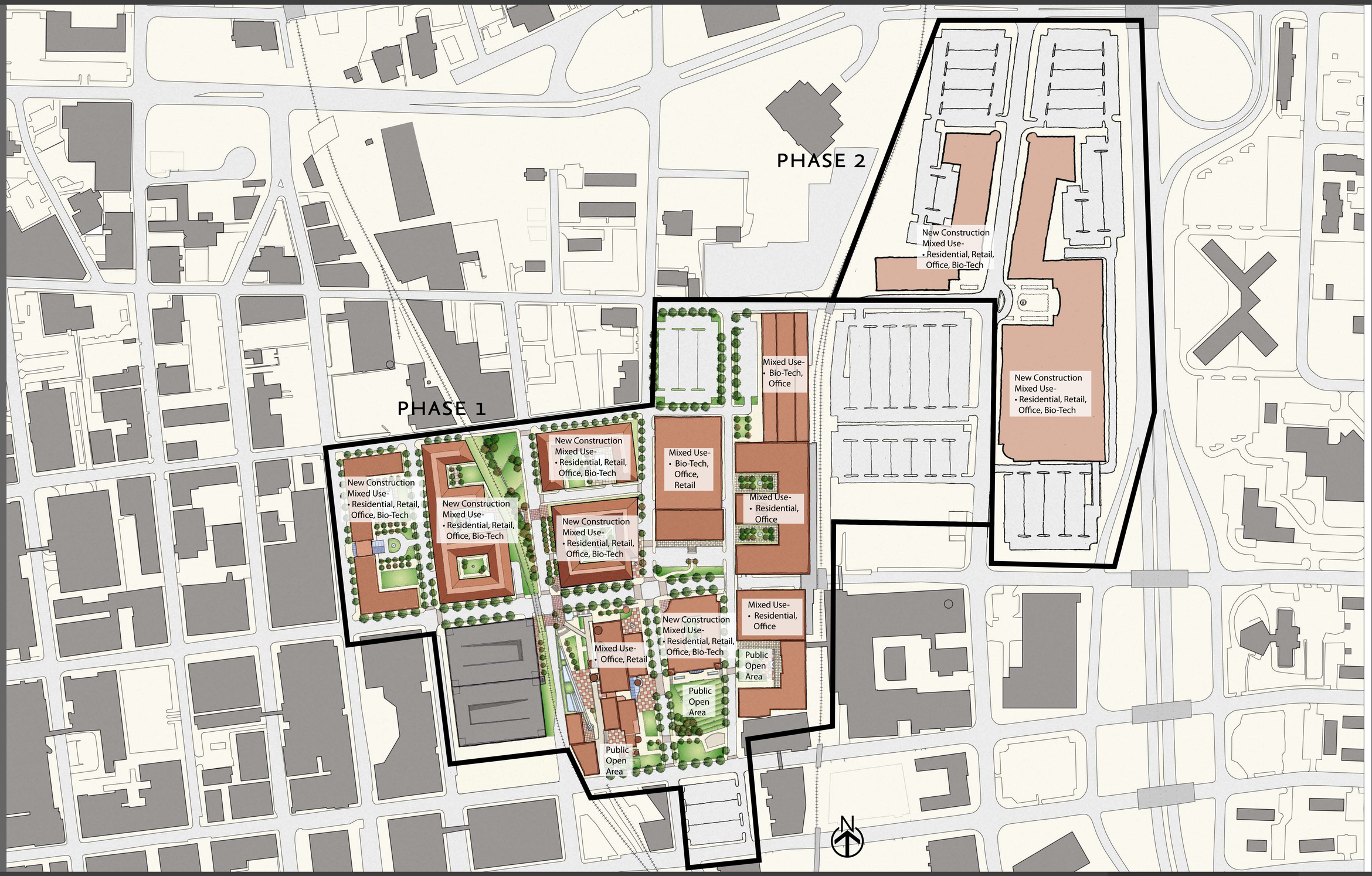

DESIGNCOLLECTIVE

McCORMACK
BARON
SALAZAR

STRUEVER BROS.
ECCLES & ROUSE, INC.

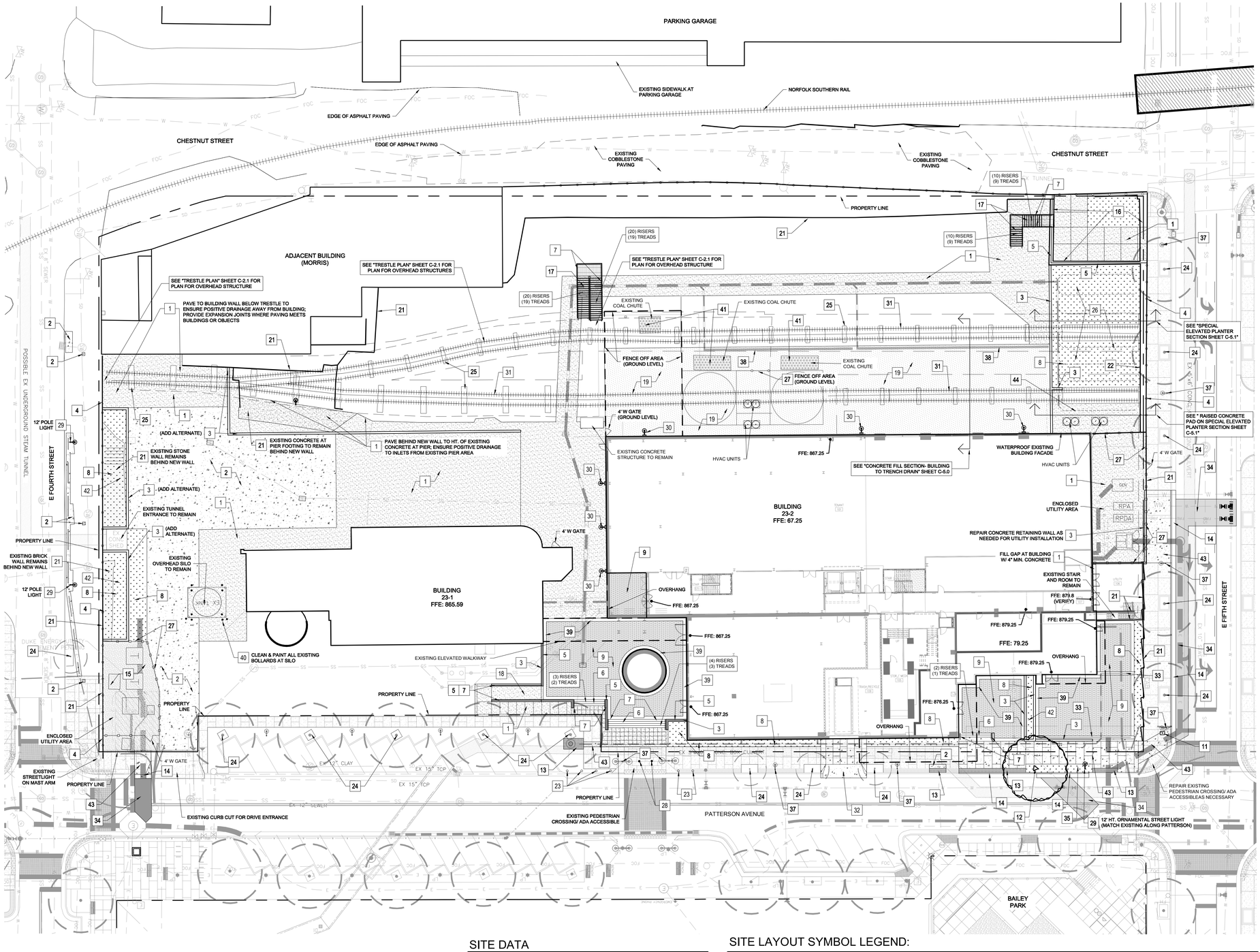

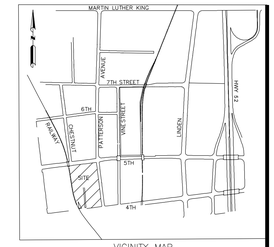

VICINITY MAP
N.T.S

SITE LAYOUT REFERENCE NOTES:

1. 4" TH. MIN. SCORED CONCRETE PAVING; SEE DETAIL #1, SHEET C-5.0
2. 6" TH. MIN. SCORED CONCRETE PAVING; SEE DETAIL #2, SHEET C-5.0
3. CAST IN PLACE CONCRETE RETAINING WALL; SEE GRADING PLAN FOR HEIGHT
4. 4' ALUMINUM DECORATIVE FENCE
5. 42" HT. GUARDRAIL W/ CABLE RAILING
6. CONCRETE STEPS; SEE GRADING PLAN
7. STAINLESS STEEL HANDRAIL
8. LANDSCAPE AREA W/ ACCENT LOW VOLTAGE LIGHTING
9. CONCRETE PAVERS; SEE DETAIL #3, SHEET C-5.1
10. TRASH & RECYCLING WIRE MESH ENCLOSURE
11. RELOCATED PEDESTRIAN SIGNAL POLE
12. STREET TREE
13. COBBLESTONE BORDER AT SIDEWALK; SEE DETAIL #6, SHEET C-5.0
14. CURB & GUTTER; MATCH EXISTING; SEE DETAIL #7, SHEET C-5.0
15. 4" DEPTH WASHED #5 STONE WITH GEOTEXTILE UNDERLINER IN FENCED UTILITY AREA
16. REDUCE HEIGHT OF EXISTING CONCRETE WALL; SEE GRADING PLAN
17. METAL STAIRS- W/ HIGH HEEL FRIENDLY METAL GRATE TREAD
18. HANDICAP ACCESSIBLE RAMP
19. CONCRETE FILL TO SLOPE FROM BUILDING TO TRENCH DRAIN; SEE GRADING PLAN
20. FIXED BOLLARDS
21. EXISTING RETAINING WALL TO REMAIN
22. EXISTING WALL TO BE REPAIRED; SEE STRUCTURAL NOTES FOR REPAIRS
23. REINSTALLED BOLLARD LIGHTS
24. EXISTING STREET TREE TO REMAIN; PROTECT DURING CONSTRUCTION
25. EXISTING CONCRETE PIERS BELOW TRESTLE TO REMAIN; SEE STRUCTURAL NOTES FOR REPAIRS
26. SPECIAL ELEVATED PLANTER; SEE DETAIL #6; SHEET C-5.1
27. 8' HT. WIRE MESH FENCING & GATES AT UTILITY YARD WITH REMOVABLE FENCE PANELS FOR ACCESS
28. REMOVABLE BOLLARD
29. STREETSCAPE LIGHTING
30. WALL MOUNTED LIGHT
31. EXISTING TRESTLE STRUCTURE TO REMAIN; SEE "TRESTLE PLAN" SHEET C-2.1 FOR PLAN & DETAILS; SEE STRUCTURAL NOTES FOR REPAIRS
32. DRIVEWAY TURNOUT DROP CURB TYPE AT 2'-6" CURB & GUTTER; SEE DETAIL #3, SHEET C-5.0
33. 4" TRENCH DRAIN W/ PEDESTRIAN RATED GRATE IN 18" CONCRETE BAND; ; SEE DETAIL #4, SHEET C-5.1 & GRADING & DRAINAGE PLANS
34. ASPHALT STREET REPAIR
35. PLANT BED AT COBBLE PAVERS; SEE DETAIL #5, SHEET C-5.0
36. CONCRETE FILL TO SLOPE FROM BUILDING TO TRENCH DRAIN; SEE DETAIL #5, SHEET C-5.1
37. EXISTING STREETSCAPE LIGHTING
38. 12" TRENCH DRAIN IN CONCRETE W/ VEHICULAR RATED GRATE ; SEE GRADING & DRAINAGE PLANS
39. 18" CONCRETE BAND AT CONCRETE PAVERS; SEE DETAIL #1, SHEET C-5.1
40. CLEAN & PAINT; COLOR SELECTION BY LANDSCAPE ARCHITECT
41. STEEL GRATE COVER OVER EXISTING COAL CHUTE W/ SINGLE LED ACCENT LIGHT
42. ELEVATED PLANTER; SEE DETAIL #2, SHEET C-5.1
43. 6" TH. MIN. SCORED CONCRETE PAVING AT CITY SIDEWALK; SEE DETAIL #4, SHEET C-5.0
44. RAISED CONCRETE PAD ON SPECIAL ELEVATED PLANTER; SEE DETAIL #7, SHEET C-5.1

SITE DATA

ZONING: CI

JURISDICTION: CITY OF WINSTON-SALEM

PIN: 6835-37-1495

SITE AREA: 2.96 AC ±

OWNER: WAKE FOREST INNOVATION QUARTER II LLC

EXISTING USE: VACANT

PROPOSED USE: MIXED USE

SITE LAYOUT SYMBOL LEGEND:

- SCORED 4" TH. MIN. CONCRETE PAVING
- GRAVEL AT UTILITY AREAS
- CONCRETE FILL TO SLOPE FROM BUILDING TO TRENCH DRAIN
- LANDSCAPED AREA
- STEEL GRATE OVER EXISTING COAL CHUTE
- 6" TH. CONCRETE PAVING
- CONCRETE PAVERS
- HIGH HEEL FRIENDLY METAL GRATE AT STEEL STAIRS & LANDINGS
- ASPHALT STREET REPAIR
- COBBLESTONE BORDER AT SIDEWALK
- WIRE MESH SCREEN FENCING SEE PLAN FOR HTS. AND GATE LOCATIONS
- 8' HT. VINYL COATED CHAIN LINK FENCE
- REINSTALLED BOLLARD LIGHTS
- FIXED BOLLARDS
- STREETSCAPE LIGHTING; MATCH EXISTING ALONG PATTERSON
- WALL MOUNTED LIGHT
- PROPOSED STREET TREE
- EXISTING STREET TREE
- EXISTING WALL TO REMAIN
- NEW CONCRETE WALL

100% DESIGN DEVELOPMENT DRAWINGS NOT APPROVED FOR CONSTRUCTION

North

20 0 20 40 60

SCALE: 1" = 20'

stimmel
LANDSCAPE ARCHITECTURE
CIVIL ENGINEERING
LAND PLANNING
601 N. TRADE STREET, SUITE 200
WINSTON-SALEM, NC 27101
P: 336.723.1067 F: 336.723.1069
www.stimmelpa.com

SEALS:

PROJECT:

WEXFORD BAILEY POWER PLANT RENOVATIONS

WINSTON-SALEM, FORSYTH COUNTY, NC

CLIENT:
WEXFORD SCIENCE & TECHNOLOGY
1090 KING GEORGE POST ROAD, SUITE 505
EDISON, NJ 08837

DRAWN:	JMT
DATE:	5-15-15
REVISIONS:	
JOB. NO:	14-074

SHEET TITLE:
SITE PLAN

SCALE: 1" = 20'

SHEET NO.:
C-2.0

© STIMMEL ASSOCIATES, P.A.

E:\JFTBP\NORTH DISTRICT\14-074_BaileyPowerPlant\Drawings\00\14-074_DD-Base.dwg , SITE C-2.0 05/15/15 10:43am

FOUNDATION & TOP OF PILES TO BE EXPOSED.

DRILLING LOCATIONS FOR PILE TESTING

SHALLOW BORINGS FOR GEOTECHNICAL INVESTIGATION.

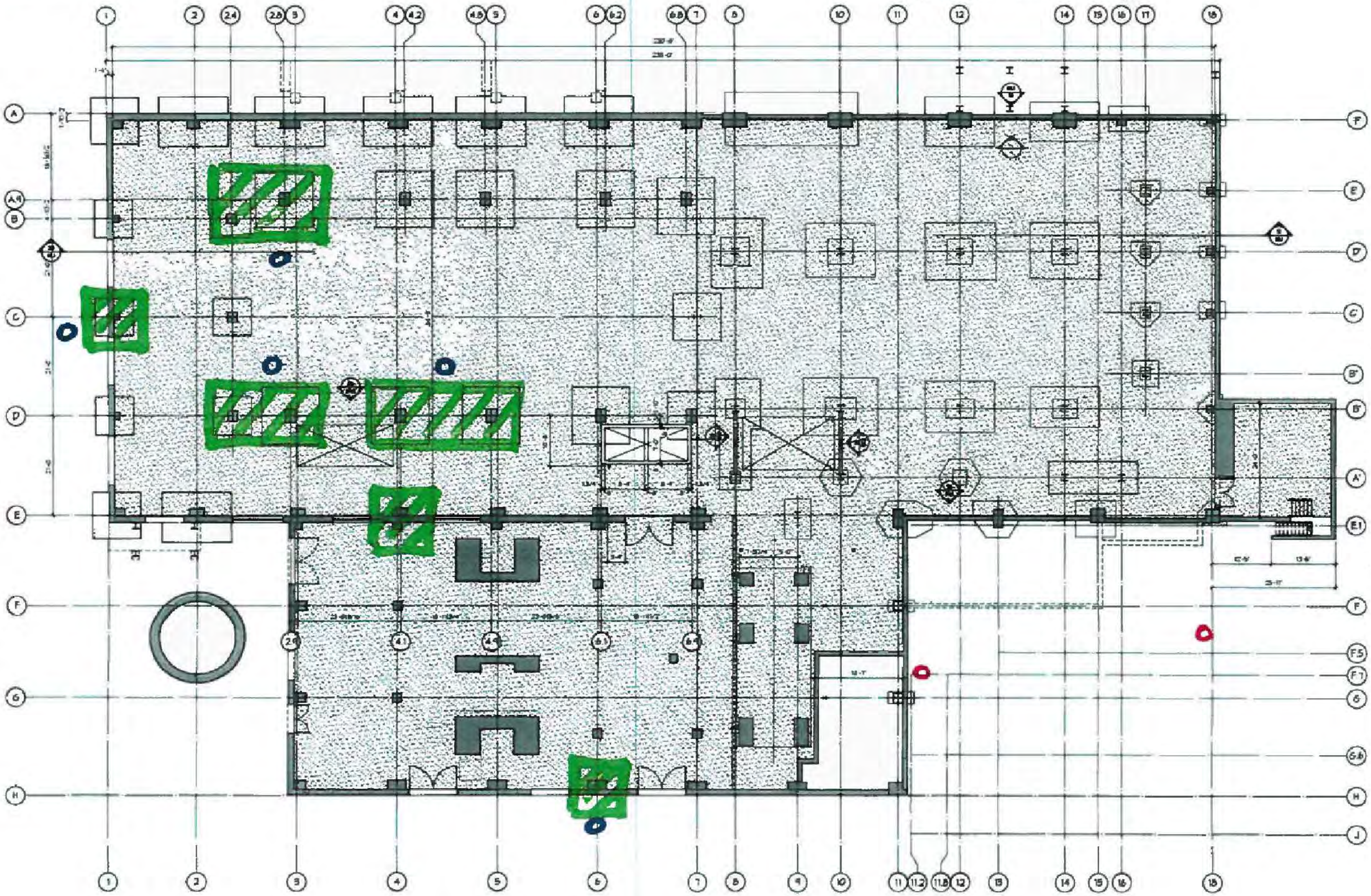

walterrobbs
ARCHITECTURE • INTERIORS • PLANNING

ENGINEERED CONCEPTS
POST OFFICE BOX 35286
GREENSBORO, NC 27425-5286
OFFICE 336 605 0020
FIRM LICENSE NO C-0874
WWW.ENGCONCEPTS.COM

BAILEY POWER PLANT
CONDITIONED SHELL
SCHEMATIC DESIGN
SUBMISSION

LEVEL 0
FOUNDATION PLAN

MARCH 30, 2015

14-193

S2.1

26 LEVEL 0 FOUNDATION PLAN

BAILEY POWER PLANT

4.15.15

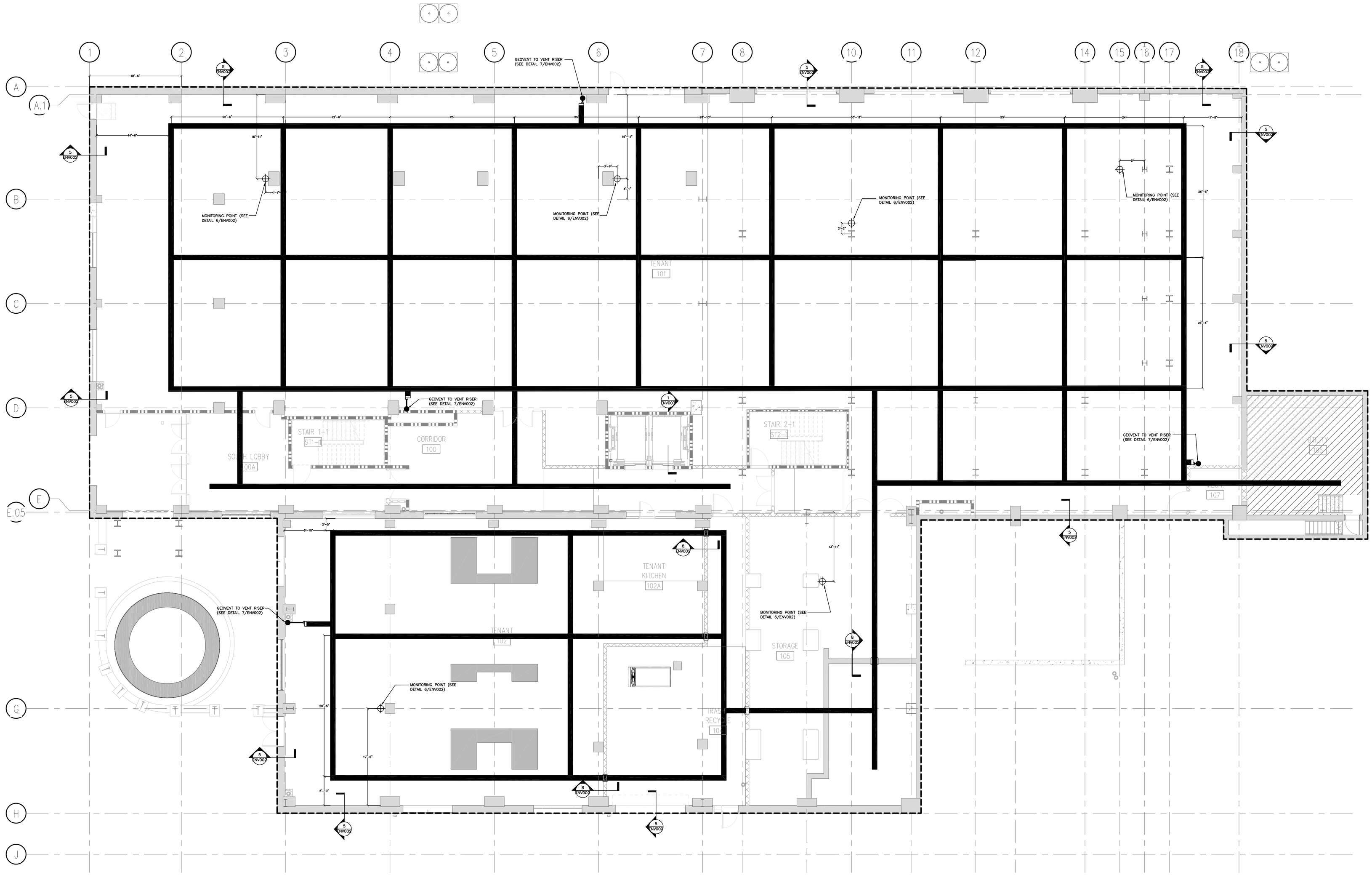

LEGEND

- HORIZONTAL EXTENT OF VI-20 GAS VAPOR BARRIER
- GEOVENT LOW-PROFILE DUCTWORK
- 4" SCH 40 PVC RISER
- 4" SCH 40 PVC PIPE

GENERAL NOTES

1. DRAWING NOT TO REFERENCED FOR ARCHITECTURAL, STRUCTURAL, OR ANY PURPOSES OTHER THAN THE GAS VAPOR BARRIER SYSTEM.
2. FINAL LOCATIONS OF RISERS AND MONITORING POINTS SHALL BE COORDINATED WITH THE ARCHITECT

0 10' 20'

Environmental Management Services
50 Prescott Street
Jersey City, NJ 07304
Phone: 201-395-0010
Fax: 201-395-0020

CONSTRUCTION DOCUMENTS PROGRESS
NOT FOR CONSTRUCTION

No.	Date	Revision

Designer:		
Drawn by:	J.TELANO	
Checked by:		
Scale: 1"= 10'-0"		Date: 04/28/2016

Project: BAILEY POWER PLANT

Address:

Drawing Title: VAPOR MITIGATION SYSTEM PLAN

Drawing No.: ENV001

Sheets in Drawing Set: 01 of 03

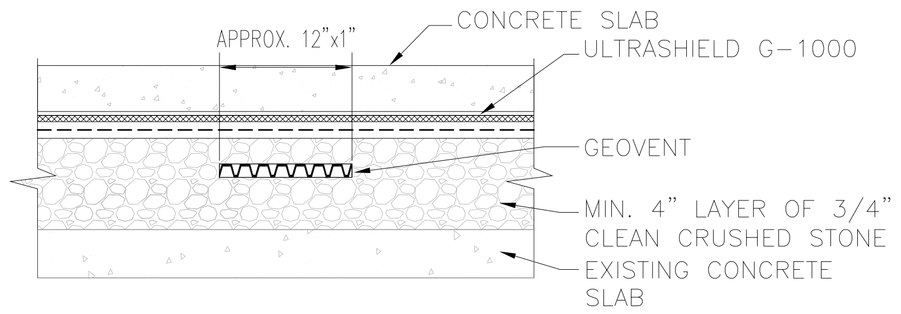

1 OPTION 1: TYPICAL GEOVENT SECTION THROUGH SLAB
N.T.S.

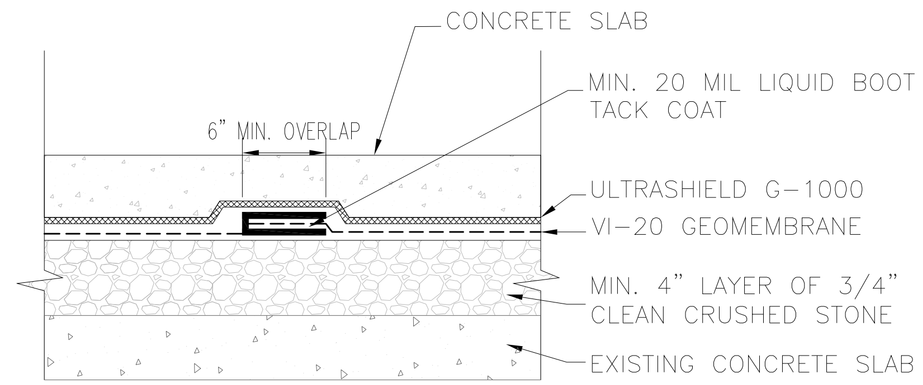

2 OPTION 1: VI-20 LAP DETAIL
N.T.S.

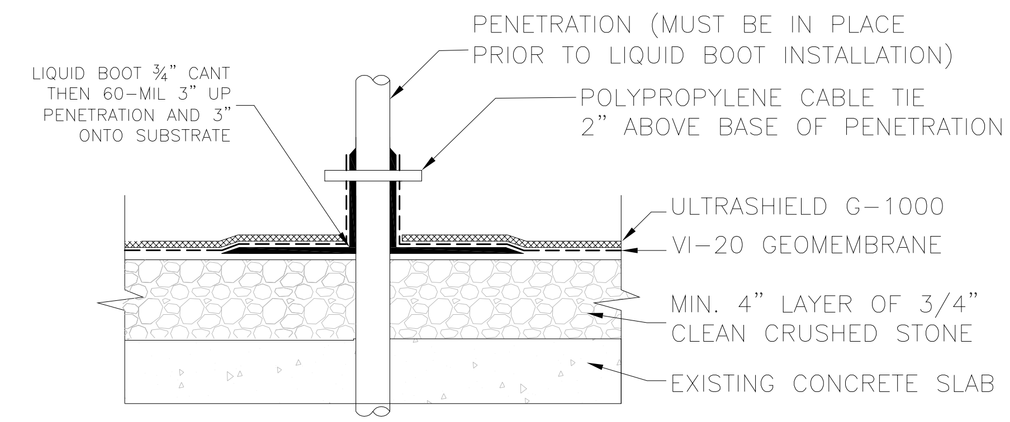

3 VI-20 PENETRATION DETAIL
N.T.S.

NOTE:
GRAVEL LAYER ABOVE VAPOR BARRIER AND FINISHED FLOOR SLAB NOTE SHOWN.

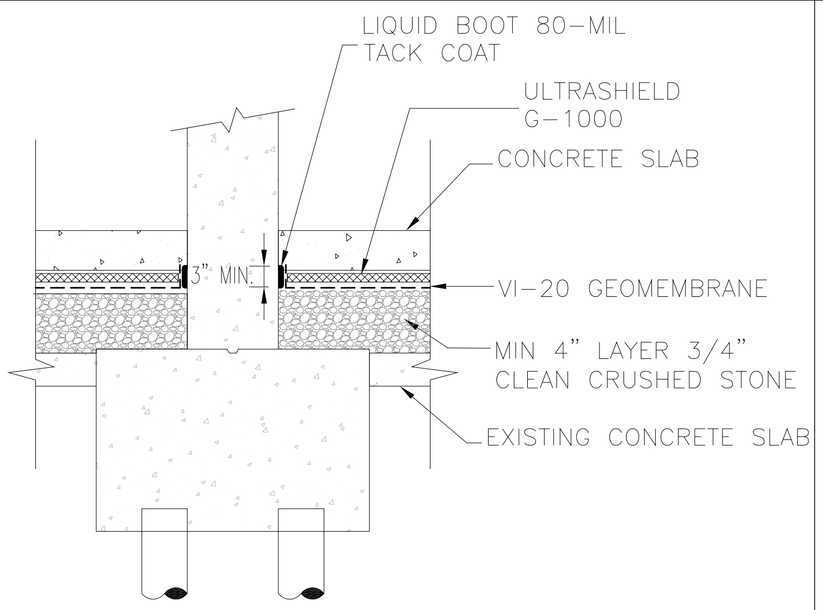

4 OPTION 1: VI-20 DETAIL AT COLUMN AND WALL PARTITION(TYP.)
N.T.S.

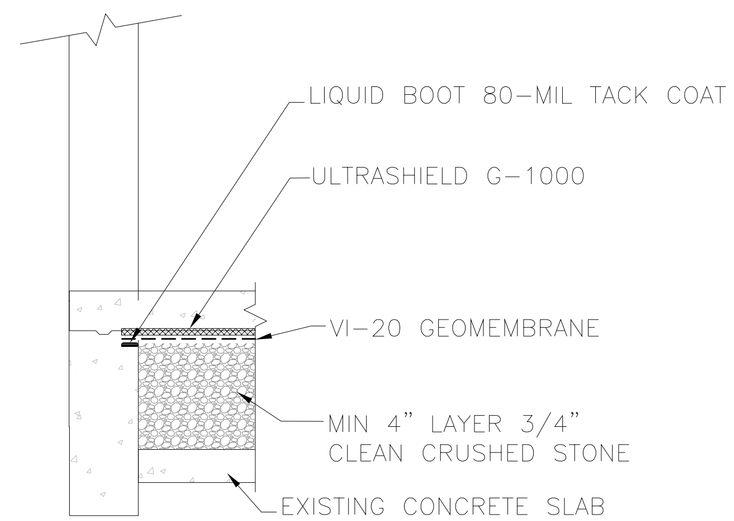

5 OPTION 1: VI-20 TERMINATION AT EXTERIOR WALL SECTION (TYP.)
N.T.S.

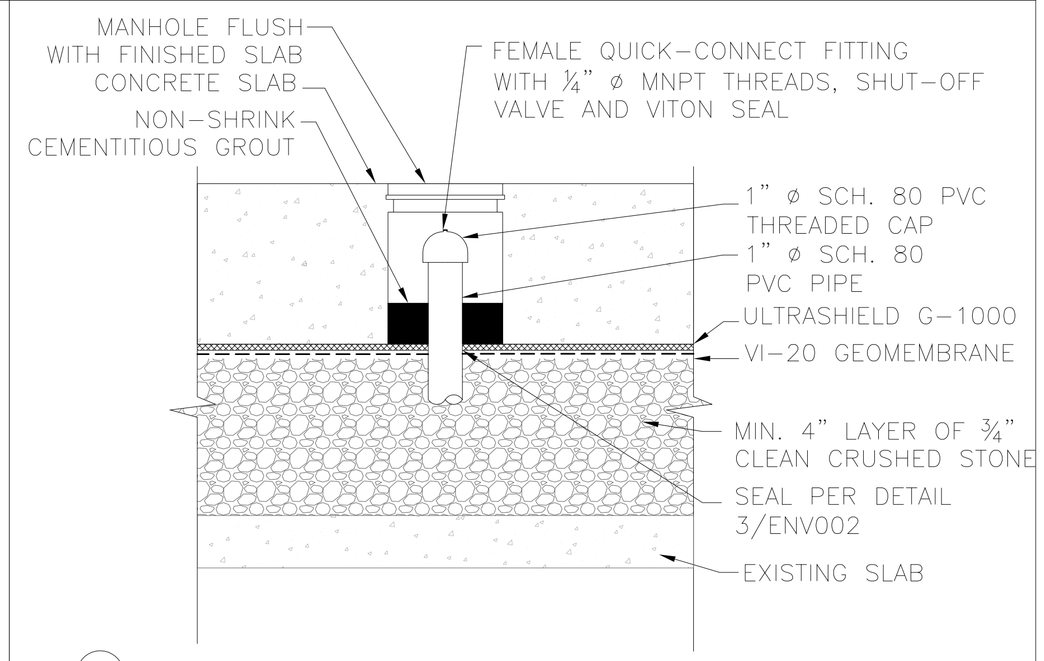

6 OPTION 1: MONITORING POINT DETAIL (TYP.)
N.T.S.

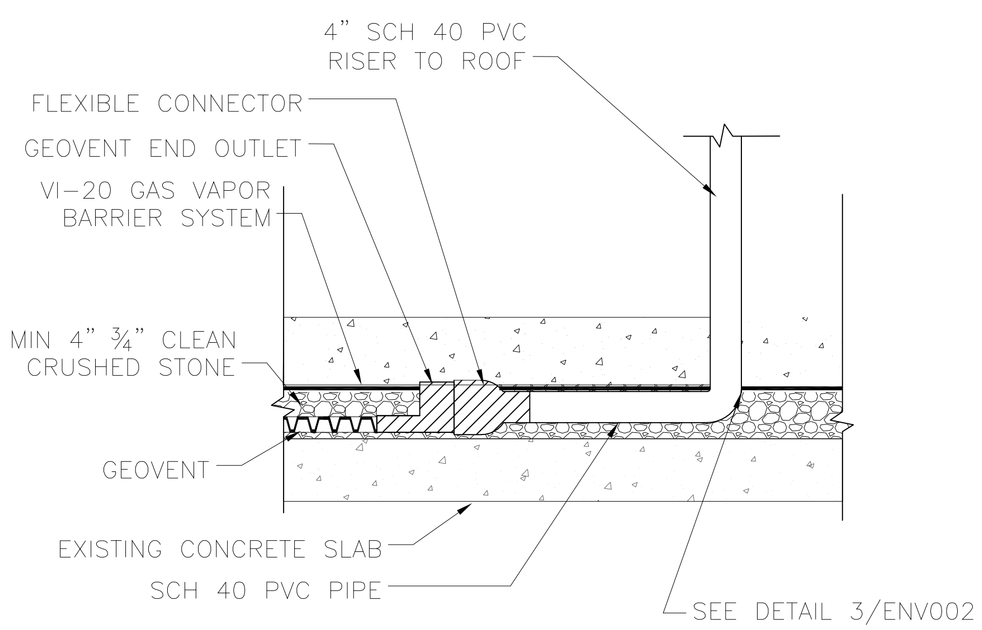

7 GEOVENT TRANSITION TO RISER DETAIL (TYP.)
N.T.S.

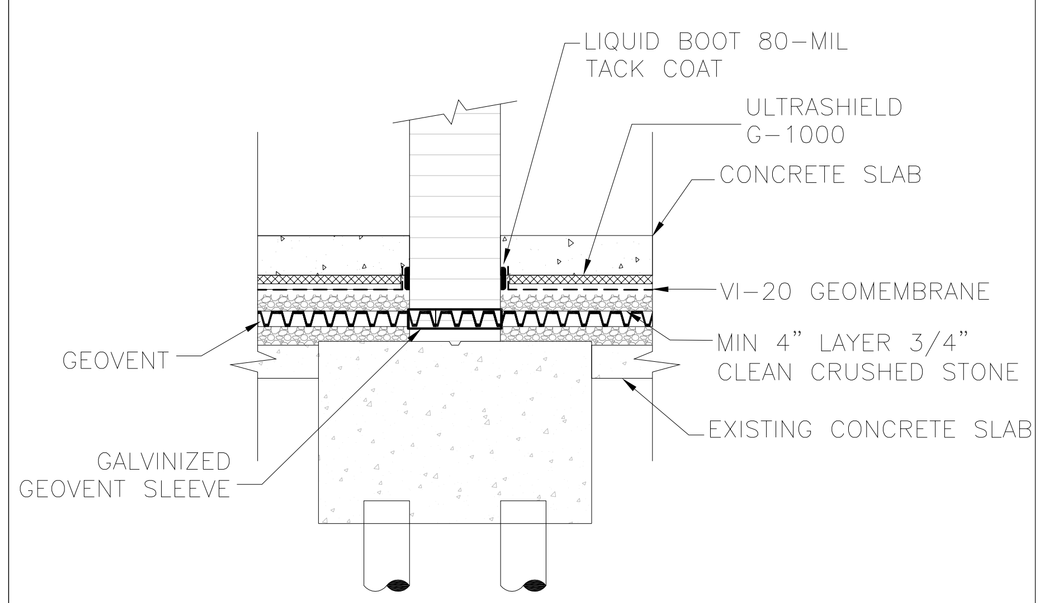

8 GEOVENT DETAIL AT WALL PARTITION(TYP.)
N.T.S.

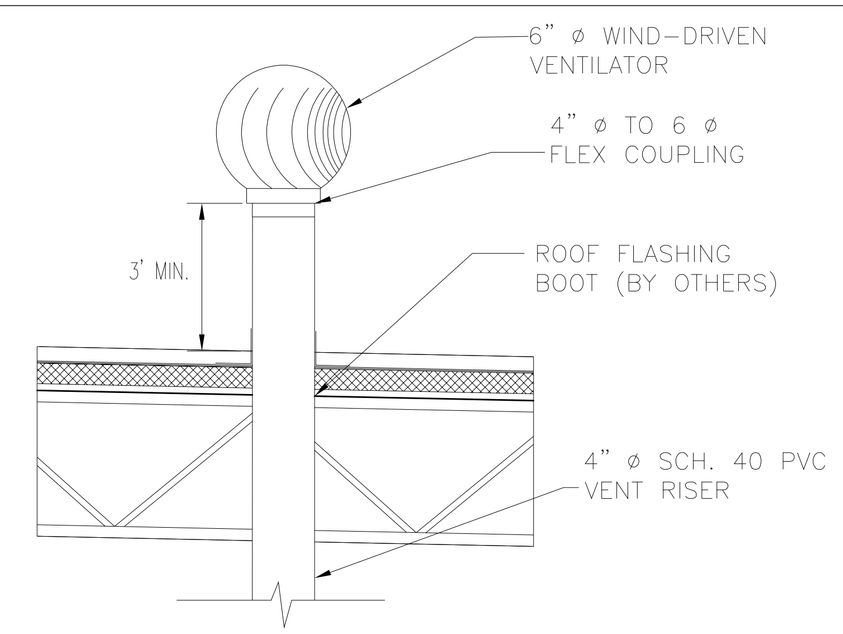

9 RISER ROOF PENETRATION
N.T.S.

NOTE:
3/4" CONDUIT NOT SHOWN. SEE GENERAL NOTE 4

GENERAL NOTES:

1. DRAWING SHALL NOT TO BE REFERENCED FOR ARCHITECTURAL, STRUCTURAL, OR ANY PURPOSES OTHER THAN THE VAPOR INTRUSION MITIGATION SYSTEM.
2. DRAWING NOT TO SCALE; DETAILS EXAGGERATED FOR CLARITY.
3. ALL WIND DRIVEN TURBINE VENTILATORS SHALL MAINTAIN A MIN. 10 FEET FROM ALL OPERABLE WINDOWS AND AIR INTAKES.
4. GENERAL CONTRACT TO PROVIDE 3/4" EMPTY CONDUIT TO ELECTRICAL PANEL AND WITHIN 5' OF RISER ROOF PENETRATION FOR FUTURE BLOWER INSTALLATION IF REQUIRED BY ENGINEER.

Environmental Management Services
50 Prescott Street
Jersey City, NJ 07304
Phone: 201-395-0010
Fax: 201-395-0020

CONSTRUCTION DOCUMENTS PROGRESS
NOT FOR CONSTRUCTION

No.	Date	Revision

Designer:		
Drawn by:	J.TELANO	
Checked by:		
Scale: NTS		Date: 04/28/2016

Project: BAILEY POWER PLANT

Address:

Drawing Title: VAPOR MITIGATION SYSTEM DETAILS I

Drawing No.: ENV002

Sheets in Drawing Set: 02 of 03

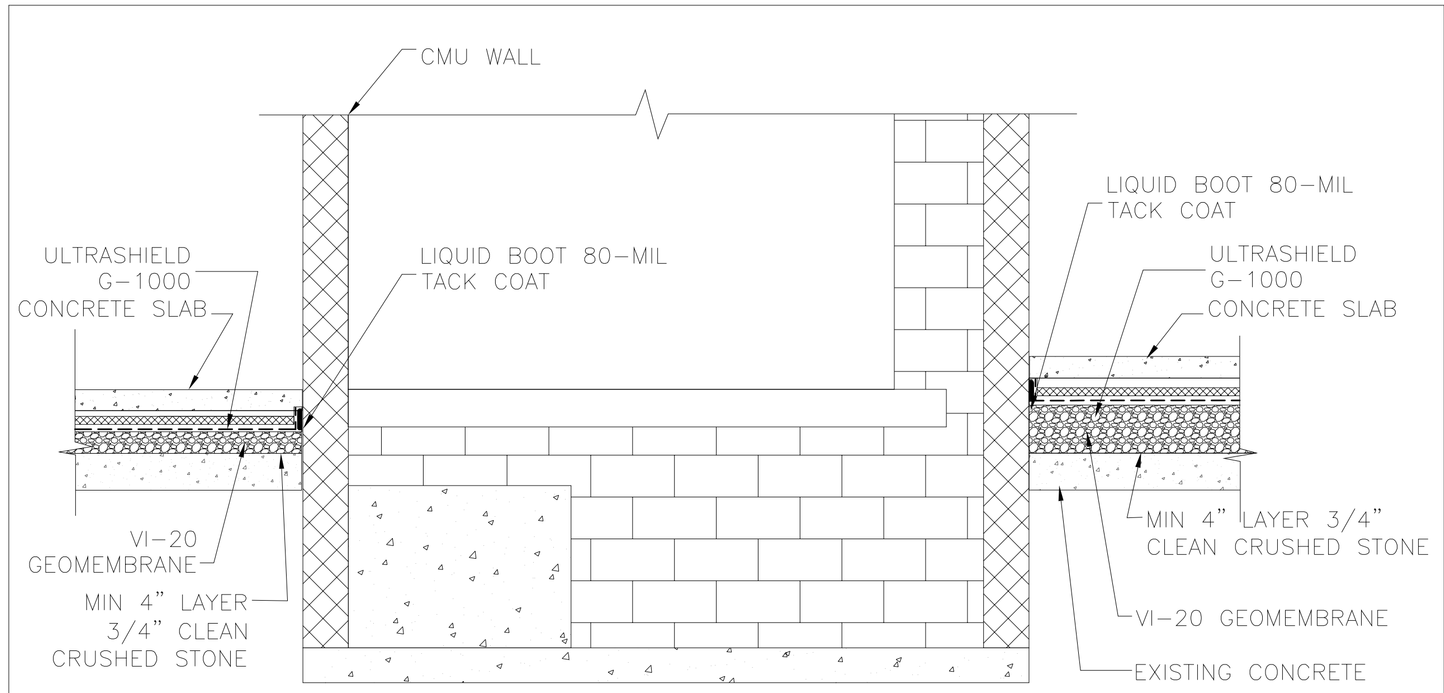

1 DETAIL AT ELEVATOR PIT SECTION
N.T.S.

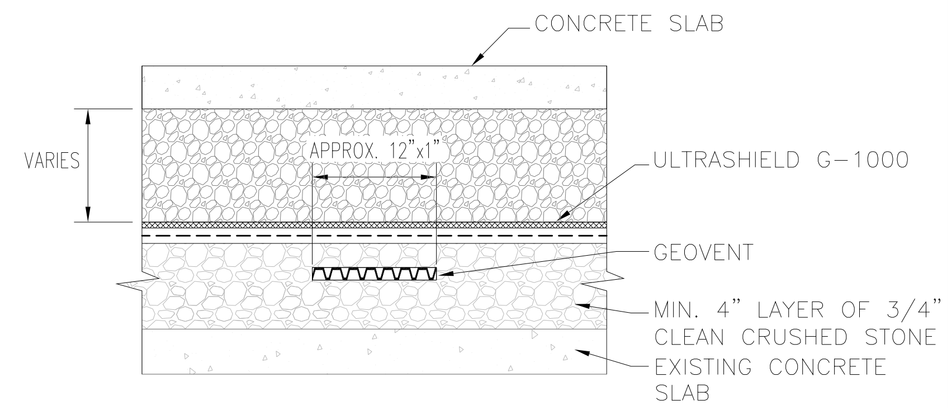

2 OPTION 2: TYPICAL GEOVENT SECTION THROUGH SLAB
N.T.S.

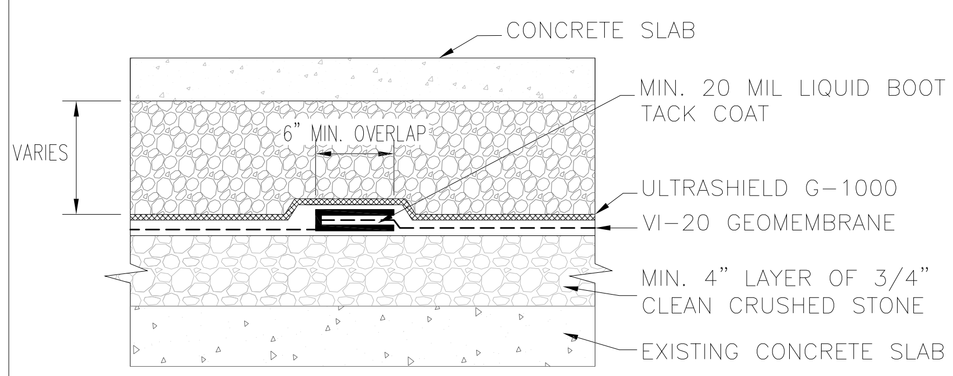

2 OPTION 2: VI-20 LAP DETAIL
N.T.S.

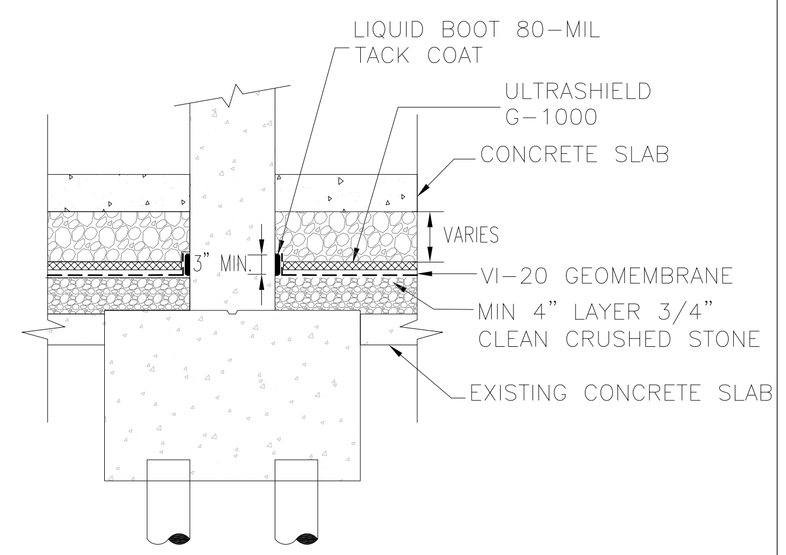

4 OPTION 2: VI-20 DETAIL AT COLUMN AND WALL PARTITION(TYP.)
N.T.S.

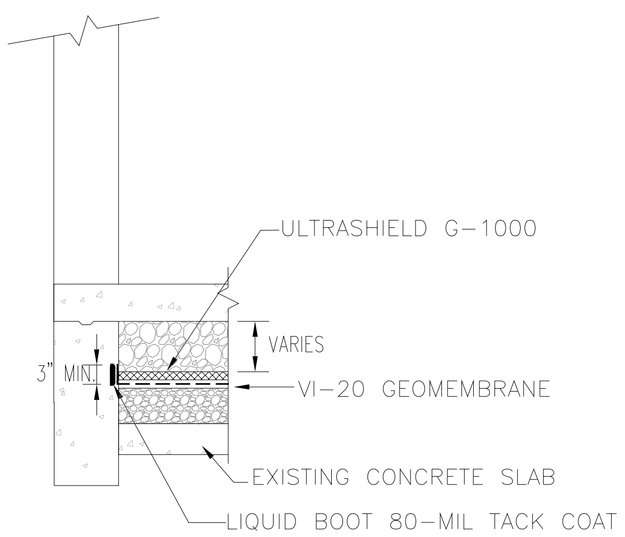

5 OPTION 2: VI-20 TERMINATION AT EXTERIOR WALL SECTION (TYP.)
N.T.S.

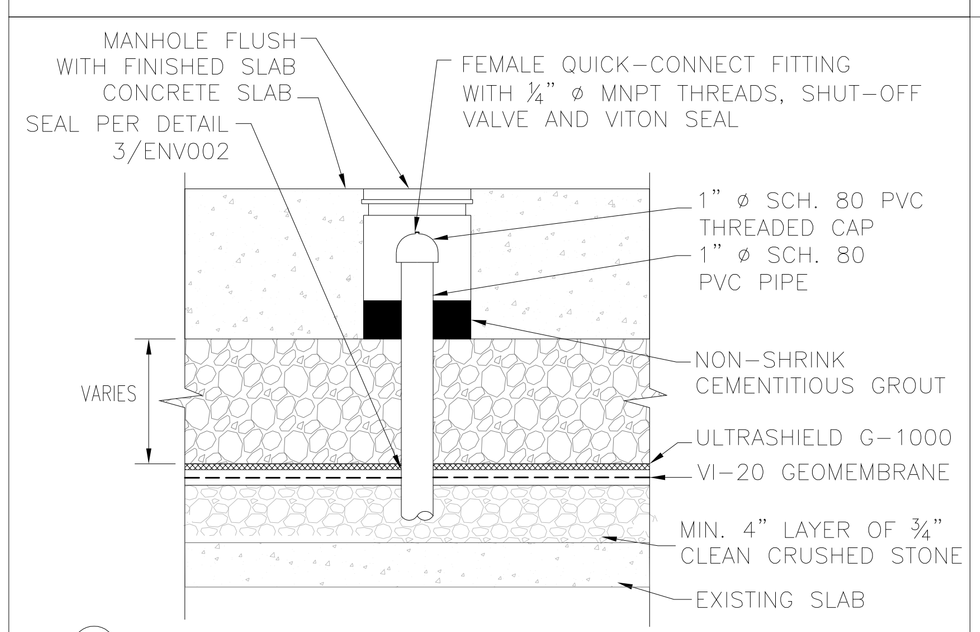

6 OPTION 2: MONITORING POINT DETAIL (TYP.)
N.T.S.

GENERAL NOTES:

1. DRAWING SHALL NOT TO BE REFERENCED FOR ARCHITECTURAL, STRUCTURAL, OR ANY PURPOSES OTHER THAN THE VAPOR INTRUSION MITIGATION SYSTEM.
2. DRAWING NOT TO SCALE; DETAILS EXAGGERATED FOR CLARITY.

Environmental Management Services
50 Prescott Street
Jersey City, NJ 07304
Phone: 201-395-0010
Fax: 201-395-0020

CONSTRUCTION DOCUMENTS PROGRESS
NOT FOR CONSTRUCTION

No.	Date	Revision

Designer:		
Drawn by:	J.TELANO	
Checked by:		
Scale: NTS		Date: 04/28/2016

Project: BAILEY POWER PLANT

Address:

Drawing Title: VAPOR MITIGATION SYSTEM DETAILS II

Drawing No.: ENV003

Sheets in Drawing Set: 03 of 03

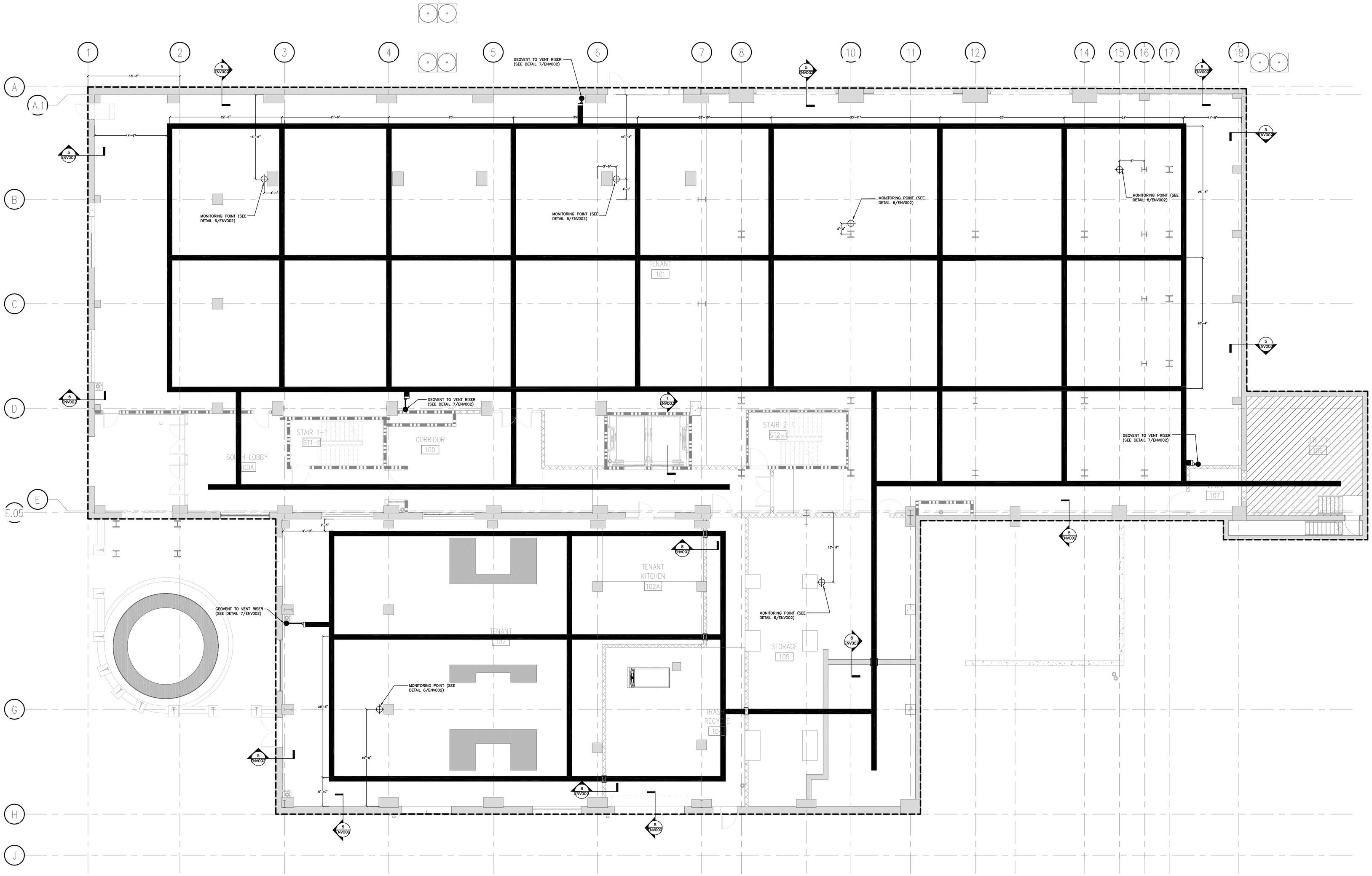

LEGEND

- HORIZONTAL EXTENT OF VI-20 GAS VAPOR BARRIER
- GEOVENT LOW-PROFILE DUCTWORK
- 4" SCH 40 PVC RISER
- 4" SCH 40 PVC PIPE

GENERAL NOTES

1. DRAWING NOT TO REFERENCED FOR ARCHITECTURAL, STRUCTURAL, OR ANY PURPOSES OTHER THAN THE GAS VAPOR BARRIER SYSTEM.
2. FINAL LOCATIONS OF RISERS AND MONITORING POINTS SHALL BE COORDINATED WITH THE ARCHITECT

0 10' 20'

Environmental Management Services
50 Prescott Street
Jersey City, NJ 07304
Phone: 201-395-0010
Fax: 201-395-0020

CONSTRUCTION DOCUMENTS PROGRESS NOT FOR CONSTRUCTION

No.	Date	Revision

Designer:	
Drawn by:	J.TELANO
Checked by:	
Scale: 1"= 10'-0"	Date: 04/28/2016

Project: BAILEY POWER PLANT

Address:

Drawing Title: VAPOR MITIGATION SYSTEM PLAN

Drawing No.: ENV001

Sheets in Drawing Set: 01 of 03

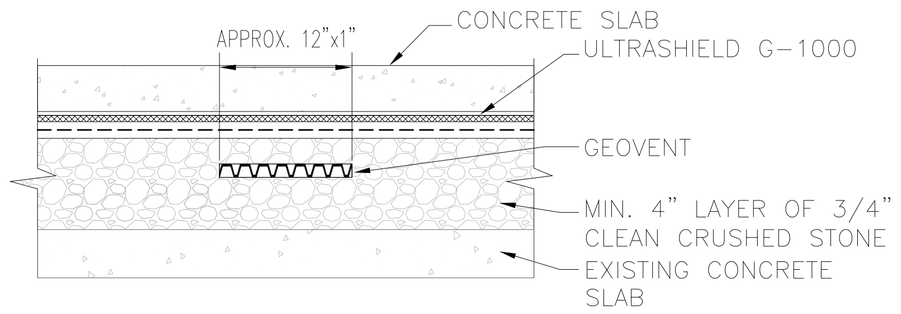

1 OPTION 1: TYPICAL GEOVENT SECTION THROUGH SLAB
N.T.S.

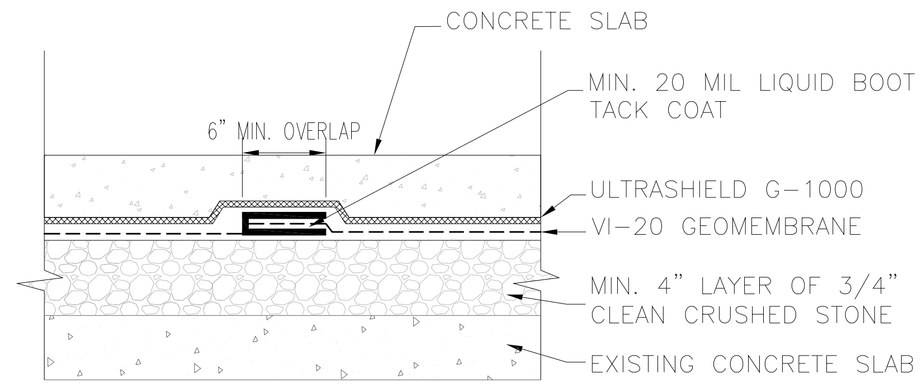

2 OPTION 1: VI-20 LAP DETAIL
N.T.S.

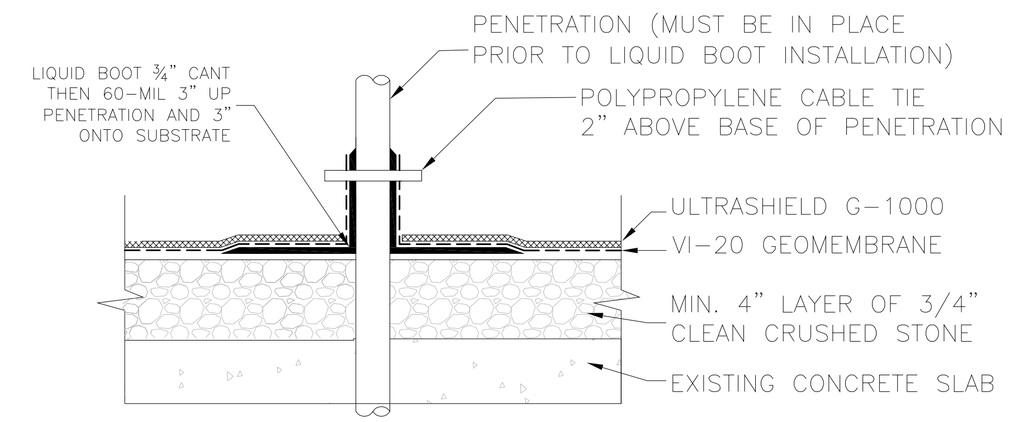

3 VI-20 PENETRATION DETAIL
N.T.S.

NOTE:
GRAVEL LAYER ABOVE VAPOR BARRIER AND FINISHED FLOOR SLAB NOTE SHOWN.

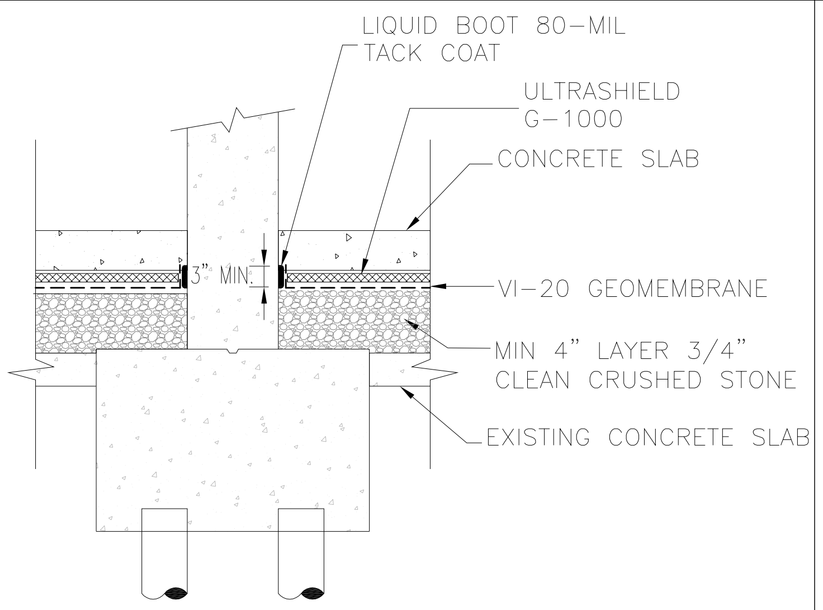

4 OPTION 1: VI-20 DETAIL AT COLUMN AND WALL PARTITION(TYP.)
N.T.S.

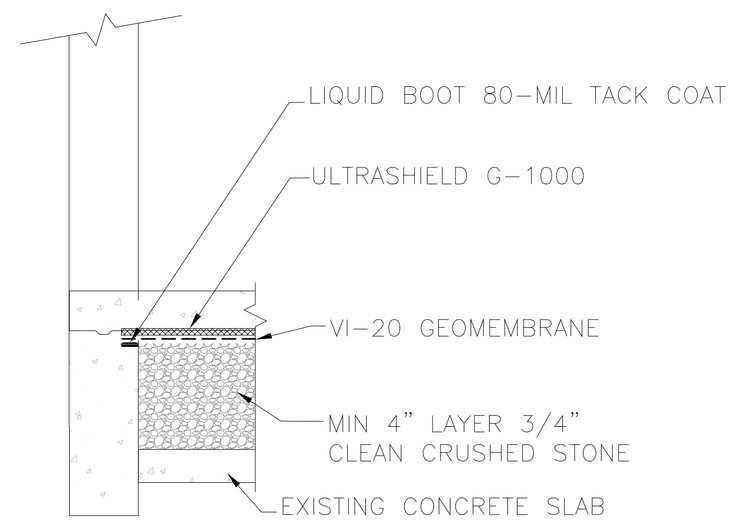

5 OPTION 1: VI-20 TERMINATION AT EXTERIOR WALL SECTION (TYP.)
N.T.S.

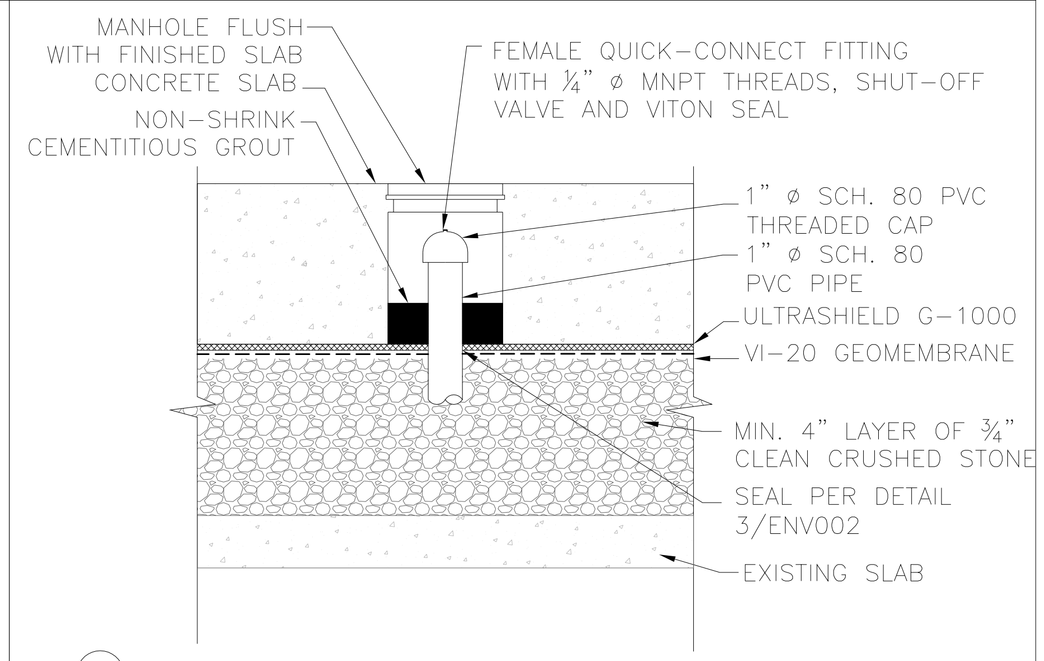

6 OPTION 1: MONITORING POINT DETAIL (TYP.)
N.T.S.

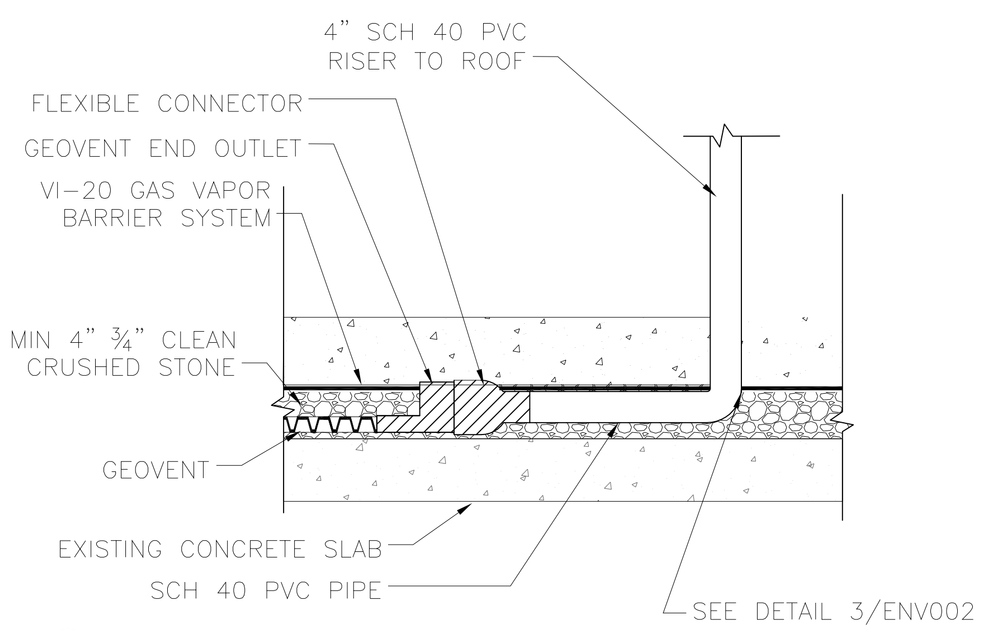

7 GEOVENT TRANSITION TO RISER DETAIL (TYP.)
N.T.S.

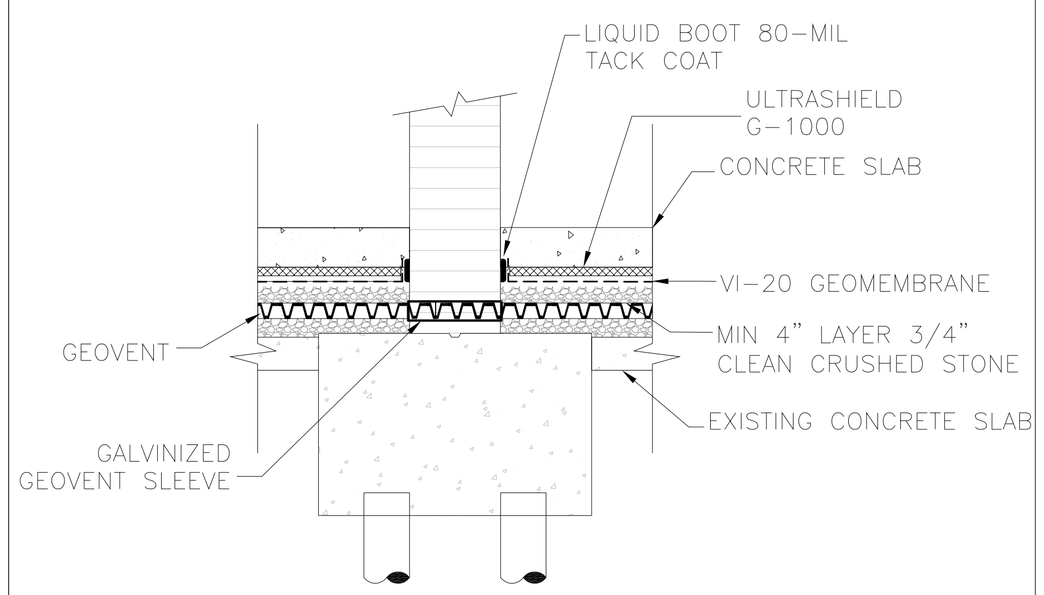

8 GEOVENT DETAIL AT WALL PARTITION(TYP.)
N.T.S.

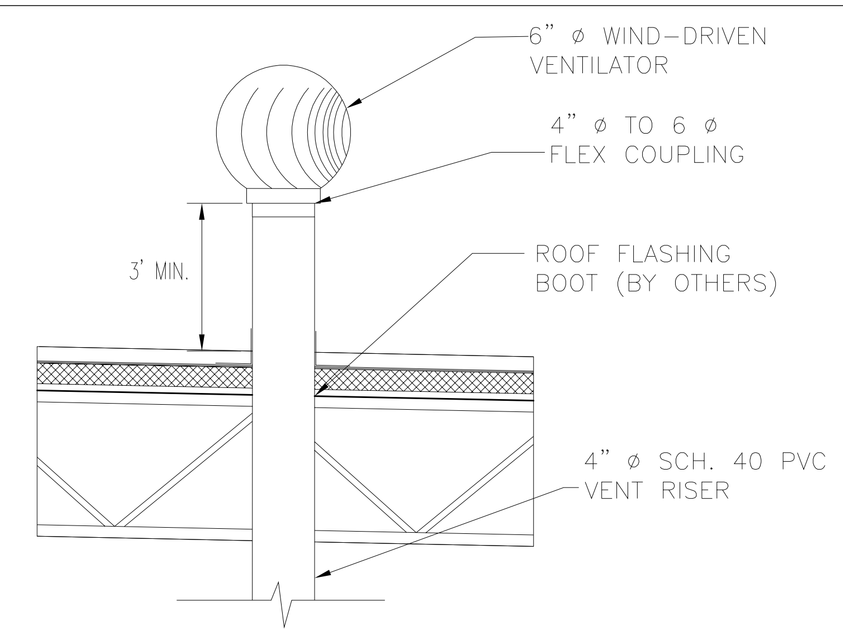

9 RISER ROOF PENETRATION
N.T.S.

NOTE:
3/4" CONDUIT NOT SHOWN. SEE GENERAL NOTE 4

GENERAL NOTES:

1. DRAWING SHALL NOT TO BE REFERENCED FOR ARCHITECTURAL, STRUCTURAL, OR ANY PURPOSES OTHER THAN THE VAPOR INTRUSION MITIGATION SYSTEM.
2. DRAWING NOT TO SCALE; DETAILS EXAGGERATED FOR CLARITY.
3. ALL WIND DRIVEN TURBINE VENTILATORS SHALL MAINTAIN A MIN. 10 FEET FROM ALL OPERABLE WINDOWS AND AIR INTAKES.
4. GENERAL CONTRACT TO PROVIDE 3/4" EMPTY CONDUIT TO ELECTRICAL PANEL AND WITHIN 5' OF RISER ROOF PENETRATION FOR FUTURE BLOWER INSTALLATION IF REQUIRED BY ENGINEER.

Environmental Management Services
50 Prescott Street
Jersey City, NJ 07304
Phone: 201-395-0010
Fax: 201-395-0020

CONSTRUCTION DOCUMENTS PROGRESS
NOT FOR CONSTRUCTION

No.	Date	Revision

Designer:		
Drawn by:	J.TELANO	
Checked by:		
Scale: NTS		Date: 04/28/2016

Project: BAILEY POWER PLANT

Address:

Drawing Title: VAPOR MITIGATION SYSTEM DETAILS I

Drawing No.: ENV002

Sheets in Drawing Set: 02 of 03

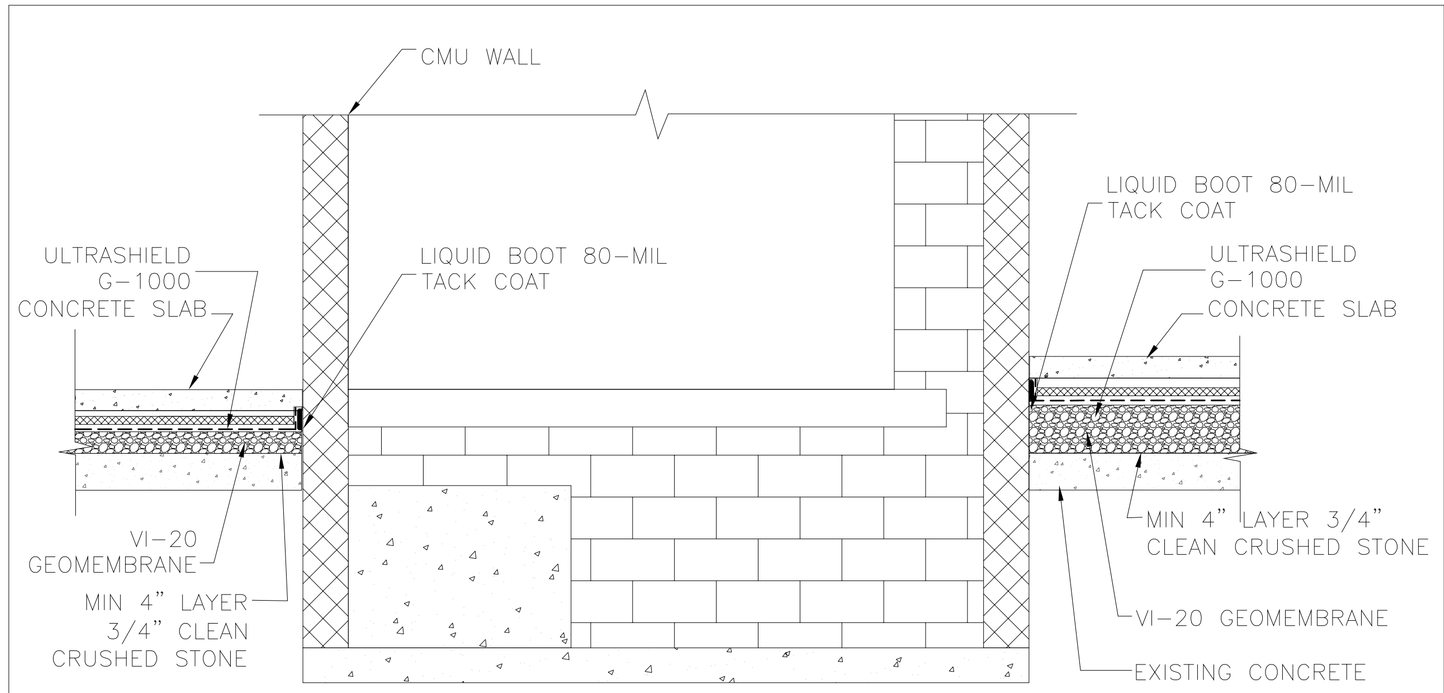

1 DETAIL AT ELEVATOR PIT SECTION
N.T.S.

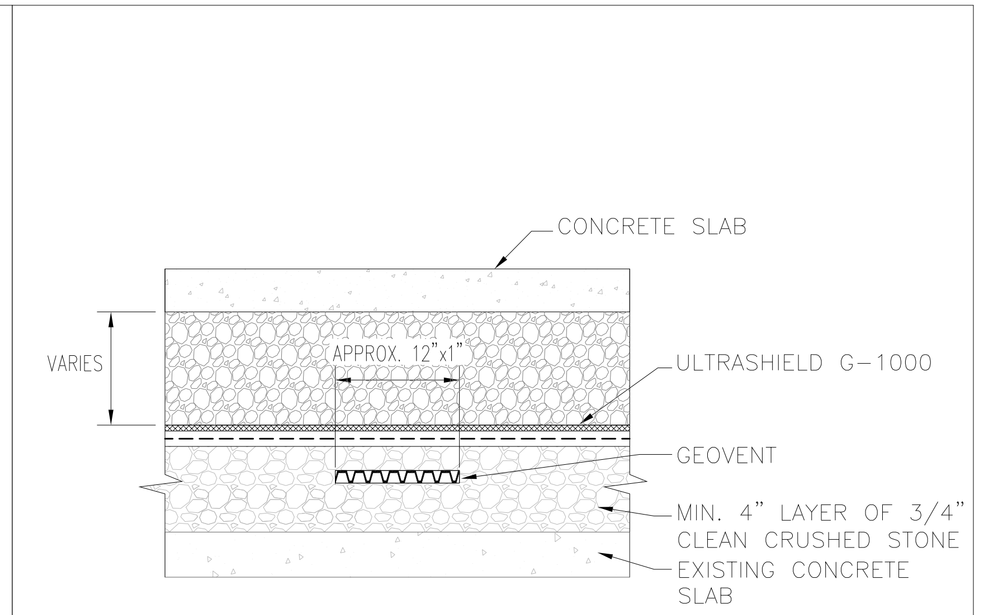

2 OPTION 2: TYPICAL GEOVENT SECTION THROUGH SLAB
N.T.S.

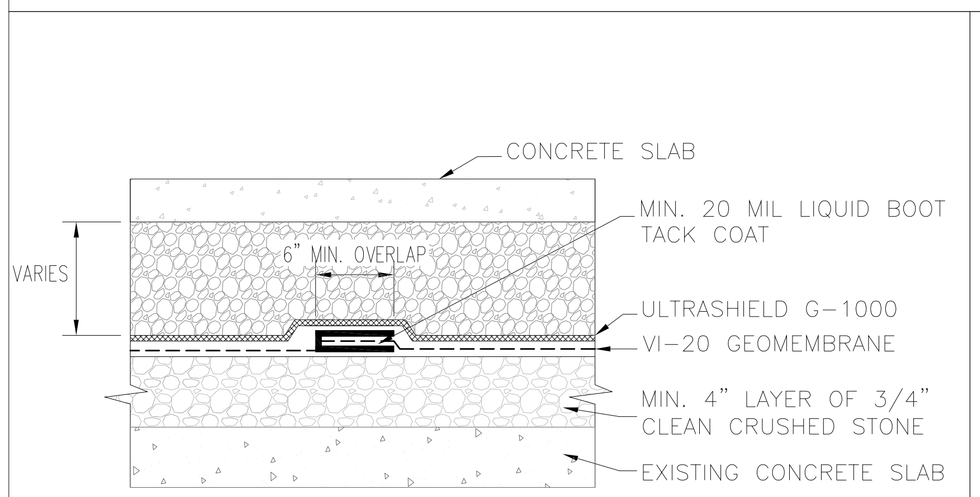

2 OPTION 2: VI-20 LAP DETAIL
N.T.S.

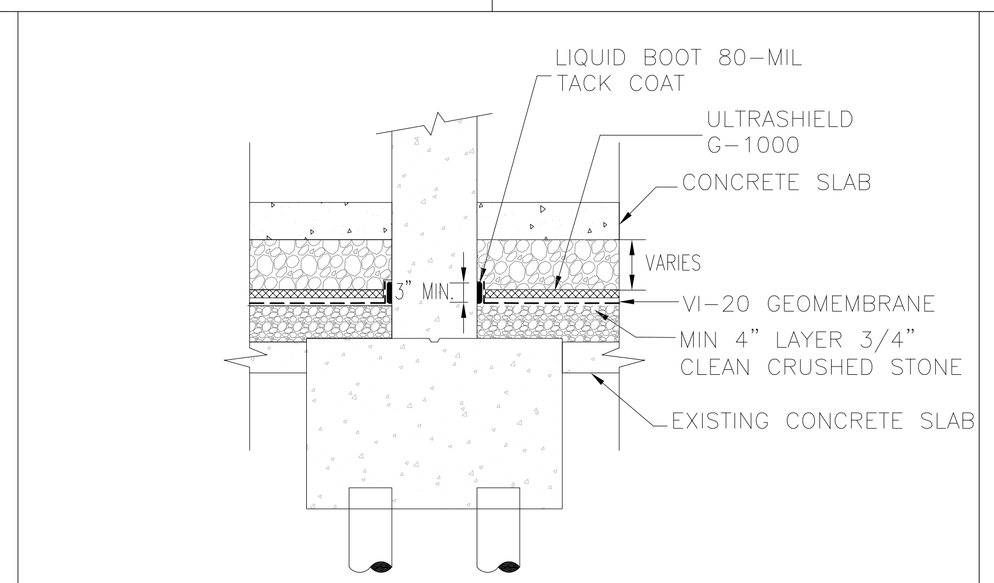

4 OPTION 2: VI-20 DETAIL AT COLUMN AND WALL PARTITION(TYP.)
N.T.S.

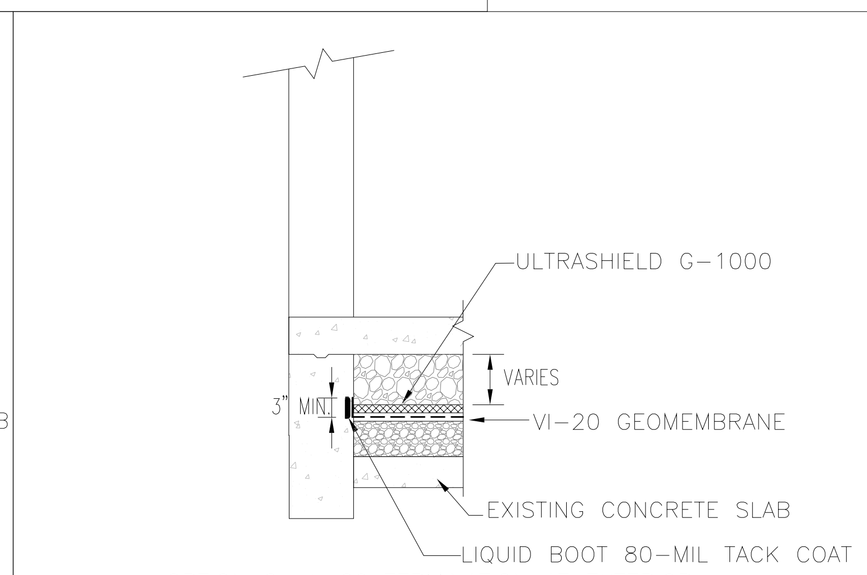

5 OPTION 2: VI-20 TERMINATION AT EXTERIOR WALL SECTION (TYP.)
N.T.S.

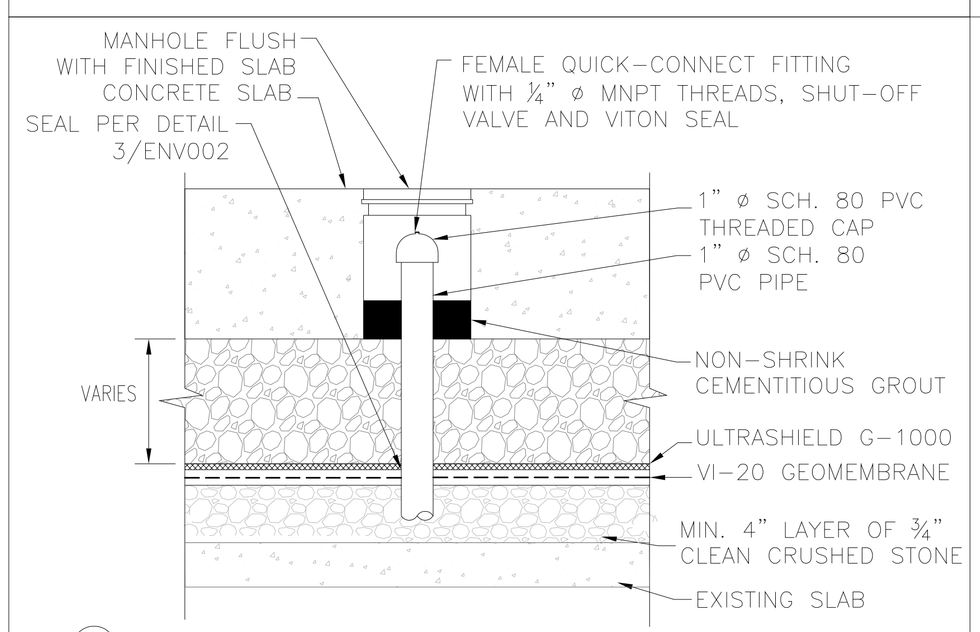

6 OPTION 2: MONITORING POINT DETAIL (TYP.)
N.T.S.

GENERAL NOTES:

1. DRAWING SHALL NOT TO BE REFERENCED FOR ARCHITECTURAL, STRUCTURAL, OR ANY PURPOSES OTHER THAN THE VAPOR INTRUSION MITIGATION SYSTEM.
2. DRAWING NOT TO SCALE; DETAILS EXAGGERATED FOR CLARITY.

Environmental Management Services
50 Prescott Street
Jersey City, NJ 07304
Phone: 201-395-0010
Fax: 201-395-0020

CONSTRUCTION DOCUMENTS PROGRESS
NOT FOR CONSTRUCTION

No.	Date	Revision

Designer:		
Drawn by:	J.TELANO	
Checked by:		
Scale: NTS		Date: 04/28/2016

Project: BAILEY POWER PLANT

Address:

Drawing Title: VAPOR MITIGATION SYSTEM DETAILS II

Drawing No.: ENV003

Sheets in Drawing Set: 03 of 03

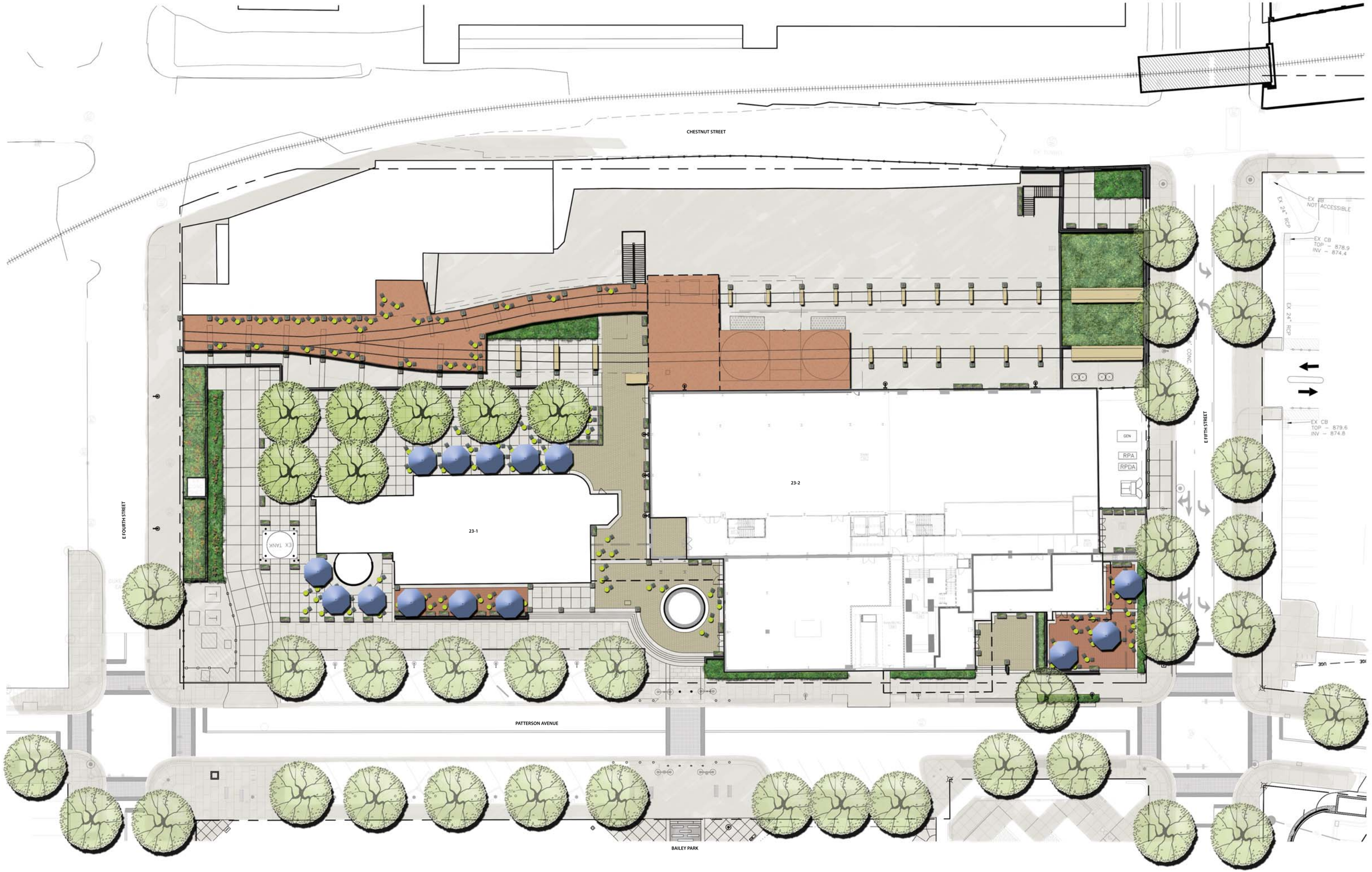
CHESTNUT STREET
E FOURTH STREET
E FIFTH STREET
PATTERSON AVENUE
BAILEY PARK
23-1
23-2
EX TANK
GEN
RPA
RPDA
EX CB
NOT ACCESSIBLE
EX CB
TOP – 878.9
INV – 874.4
EX CB
TOP – 879.6
INV – 874.8
EX 24" RCP
EX 24" RCP

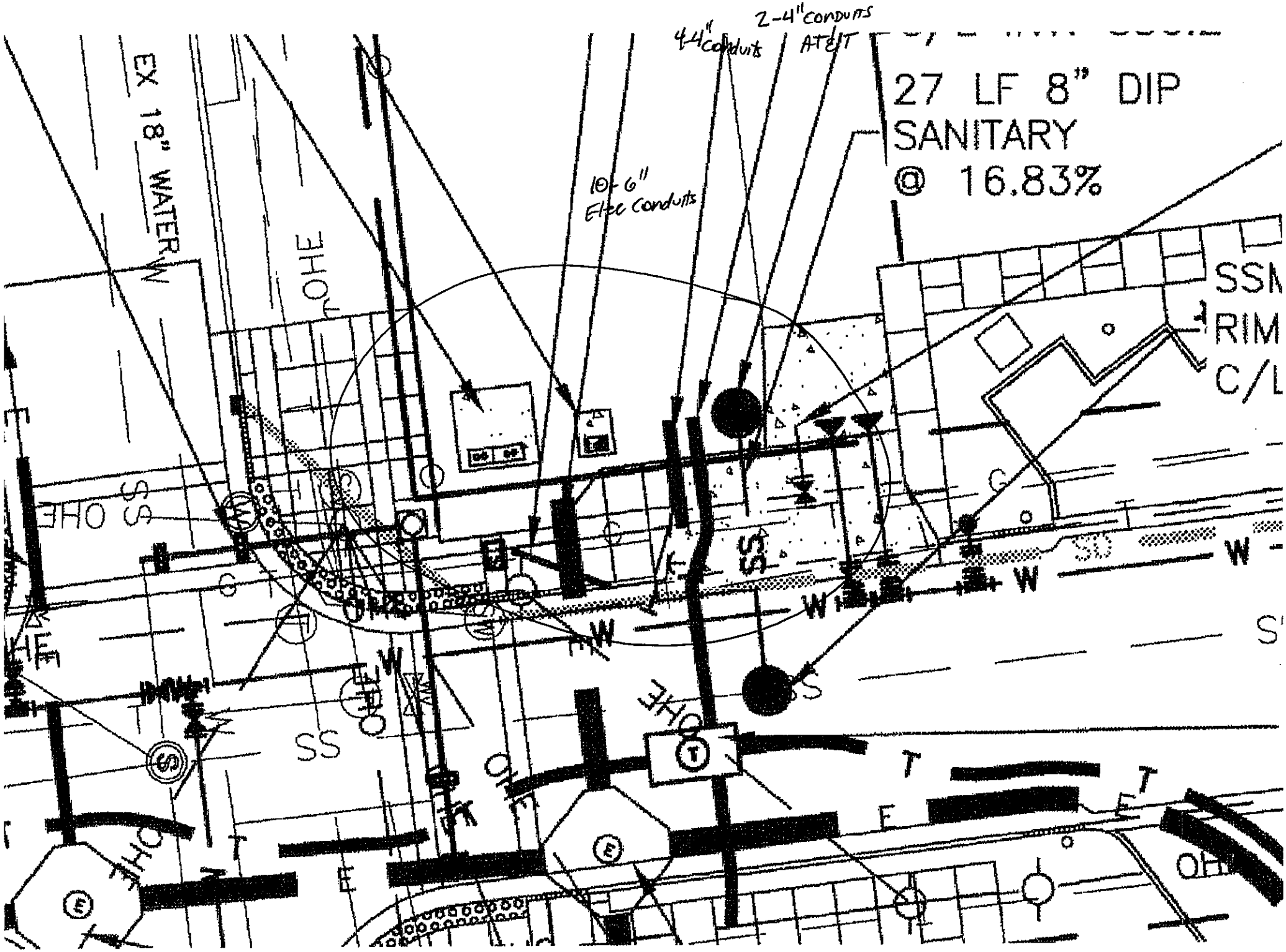
2-4" conduits
4-4" conduits
AT&T
27 LF 8" DIP
SANITARY
@ 16.83%
10-6"
Elec conduits
EX 18" WATER
SSM
RIM
C/L

Source: Google Earth – February 2005

ERM NC, Inc.

FORMER SITE LAYOUT MAP
BAILEY PARK
WAKE FOREST INNOVATION QUARTER
WINSTON-SALEM, NORTH CAROLINA

FIGURE

1

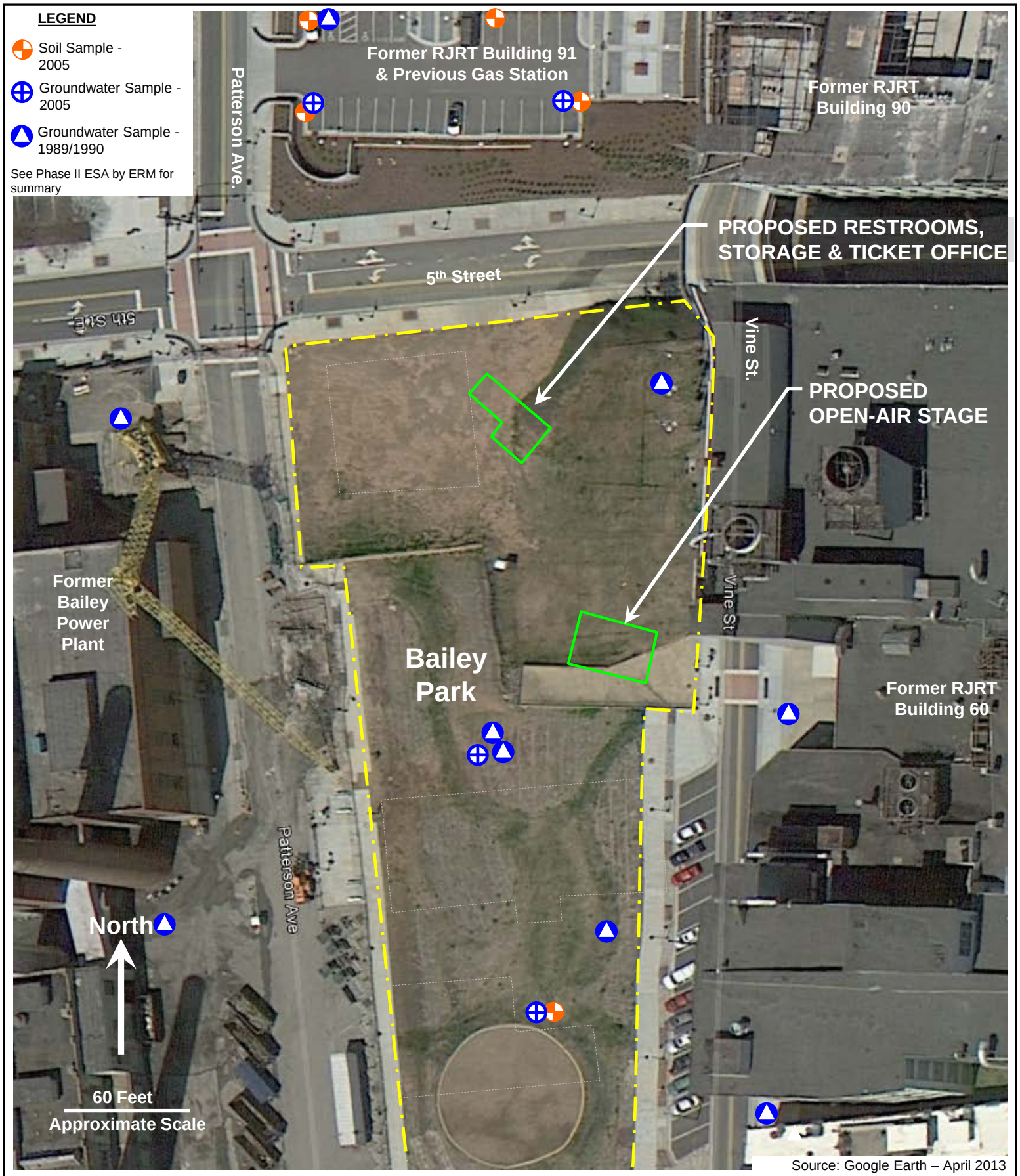

Source: Google Earth – April 2013

ERM NC, Inc.

CURRENT SITE LAYOUT AND PROPOSED STRUCTURES
BAILEY PARK
WAKE FOREST INNOVATION QUARTER
WINSTON-SALEM, NORTH CAROLINA

FIGURE 2

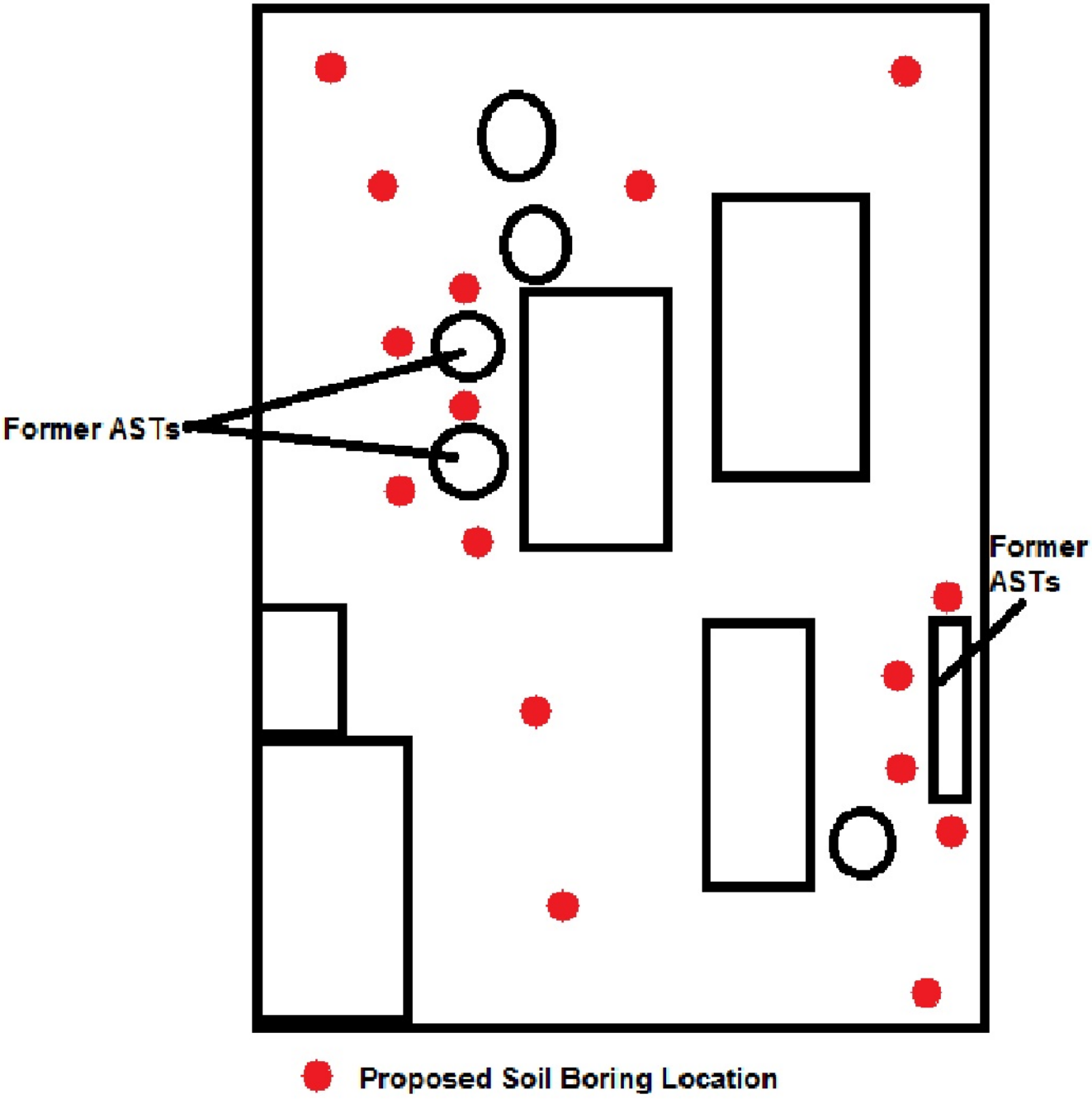

Figure 1: **Soil Boring Location Map**

N

HILLMANN CONSULTING

Project: **V3: 8588**

Location: **450 Patterson Ave, Winston-Salem, North Carolina**