INITIAL ABATEMENT ACTION REPORT

CHARLOTTE PIPE AND FOUNDRY 5
624 WEST SUMMIT AVENUE
CHARLOTTE, MECKLENBURG COUNTY
NORTH CAROLINA 28203

WPC PROJECT NO. WPC4408.00071

AUGUST 14, 2008

RECEIVED
NCDENR
AUG 15 2008
Division of Waste Management
UST Section
Mooresville Regional Office

WPC

www.wpceng.com

INITIAL ABATEMENT ACTION REPORT

CHARLOTTE PIPE AND FOUNDRY 5
624 WEST SUMMIT AVENUE
CHARLOTTE, MECKLENBURG COUNTY
NORTH CAROLINA 28203

NCDENR INCIDENT NO. 36493
UST FACILITY NO. NON-REGULATED

WPC PROJECT NO. WPC4408.00071

Prepared On Behalf Of:

Charlotte Pipe & Foundry
1335 South Clarkson Street
Charlotte, North Carolina 28203

Prepared By:

WPC
2401 Nevada Boulevard
Charlotte, North Carolina 28273
(704) 927-4000

August 14, 2008

www.wpceng.com

TABLE OF CONTENTS

A. SITE INFORMATION 1
SITE IDENTIFICATION 1
INFORMATION ABOUT CONTACTS ASSOCIATED WITH THE LEAKING UST SYSTEM 1
INFORMATION ABOUT RELEASE 2
CERTIFICATION 2
B. SITE HISTORY AND CHARACTERIZATION 2
UST OWNER AND OPERATOR INFORMATION 2
UST INFORMATION 2
NON-UST INFORMATION 3
COMPREHENSIVE DESCRIPTION OF THE RELEASE 3
BRIEF DESCRIPTION OF SITE CHARACTERISTICS 3
INITIAL ABATEMENT ACTIONS 4
C. INITIAL RESPONSE AND ABATEMENT ACTION 5
INITIAL RESPONSE ACTIONS PERFORMED 5
INITIAL ABATEMENT ACTIONS PERFORMED 5
D. EXCAVATION OF CONTAMINATED SOIL 5
SOURCE AND ESTIMATED EXTENT OF SOIL CONTAMINATION 5
EXCAVATION PROCESS 6
POST-EXCAVATION CONFIRMATION SOIL SAMPLING 6
SOIL INVESTIGATION 7
DISPOSAL OF CONTAMINATED SOIL 7
CONCLUSIONS 8

TABLES

Table B-1: Site History – UST/AST System Information
Table B-2: Site History – UST Owner and Operator Information
Table B-3: Summary of Soil Sampling Results

FIGURES

Figure 1: Site Topographic Map
Figure 2: Site Aerial Photograph and Property Boundary Map
Figure 3: Site Map and UST Excavation Limits Map
Figure 4: UST Location, Orientation and Details Map
Figure 5: Initial Soil Sampling (Post UST Removal) Confirmation of Release Map
Figure 6: Location of Post Excavation Soil Sampling Map

APPENDICES

Appendix I: Site Health and Safety Plan
Appendix II: Certificate of UST Disposal and Soil Disposal Manifests
Appendix III: Chain-Of-Custody Records
Appendix IV: Laboratory Analytical Reports
Appendix V: Site Photographs

A. SITE INFORMATION

Site Identification

Date of Report:	August 14, 2008
Facility ID:	Unregulated Site
UST Incident Number (if known):	36493
Site Name:	Charlotte Pipe and Foundry 5
Site Street Address:	624 W. Summit Avenue
City/Town:	Charlotte
Zip Code:	28203
County:	Mecklenburg

Description of Geographical Data Point (e.g., diesel fill port): UST fill port
Location Method (GPS, topographical map, other): GIS Address Mapping

Latitude (decimal degrees):	35.322091
Longitude (decimal degrees):	-80.86127

Information about Contacts Associated with the Leaking UST System

UST Owner:	Charlotte Pipe & Foundry
Address:	1335 S. Clarkson St., Charlotte, NC 28203
Telephone:	704-348-5408
UST Operator:	Charlotte Pipe & Foundry
Address:	1335 S. Clarkson St., Charlotte, NC 28203
Telephone:	704-348-5408
Property Owner:	Charlotte Pipe & Foundry
Address:	1335 S. Clarkson St., Charlotte, NC 28203
Telephone:	704-348-5408
Property Occupant:	Charlotte Pipe & Foundry
Address:	624 W. Summit Ave., Charlotte, NC 28203
Telephone:	704-348-5408
Consultant/Contractor:	WPC, Inc.
Address:	2401 Nevada Boulevard, Charlotte, NC 28273
Telephone:	704-927-4000
Analytical Laboratory:	Pace Analytical Laboratories, Inc.
State Certification No.:	NC00014
Address:	9800 Kincey Avenue, Suite 100, Huntersville, NC 28078
Telephone:	704-875-3570

Information about Release

Date Discovered:	May 15, 2008
Estimated Quantity of Release:	Unknown
Cause of Release:	Corrosion
Source of Release (Dispenser/Piping/UST):	UST

Sizes and contents of UST system(s) from which the release occurred): Two 550 gallon tanks

Certification

I, David S. Lipka, a Professional Engineer for WPC, Inc., do certify that the information contained in this report is correct and accurate to the best of my knowledge.

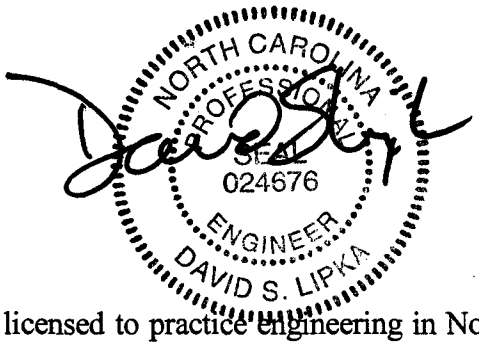

WPC, Inc. is licensed to practice engineering in North Carolina. The certification number of the company or corporation is C1429.

B. SITE HISTORY AND CHARACTERIZATION

UST owner and operator information

See Table B-2.

UST information

See Table B-1.

Non-UST information

There have been no Aboveground Storage Tanks (ASTs) or associated piping or pumps located on the property. There have been no reports of any historical releases on the property. See Table B-1

Comprehensive description of the release

Two 550-gallon USTs (UST-1 and UST-2) were unearthed and excavated from the property on April 10, 2008, which was not witnessed by WPC. Following the removal of the tanks, the excavation remained open to facilitate the collection of soil samples from the floor of the pit. On April 16, 2008, WPC collected two soil samples along the long axis of where each tank was buried (four soil samples collected in total). All four soil samples (UST-1, UST-1A, UST-2, UST-2A) were submitted to Pace Analytical Laboratories of Huntersville, North Carolina for analysis. The resultant analysis for Total Petroleum Hydrocarbons – Diesel Range Organics (TPH-DRO) and Total Petroleum Hydrocarbons – Gasoline Range Organics (TPH-GRO) was returned on April 23, 2008. The concentration of TPH-DRO for UST-1 ranged from 29.9 to 16,700 mg/kg while the concentration for UST-2 ranged from 1,470 to 15,000 mg/kg. The concentration of TPH-GRO for UST-1 ranged from Non-Detect (ND) to 83.3 mg/kg while the concentration for UST-2 ranged from ND to 58.7 mg/kg.

The property was formerly the site of two millhouses whose footprint extended from the site of the USTs to West Summit Avenue. There is no knowledge of any other USTs being located on the subject property. There was no record of any AST or associated piping or pumps on the property. The USTs in question were last used for the storage of heating oil when the millhouses were occupied. Prior to demolition, the millhouses were unoccupied for an extended period of time. It was suspected that following the confirmation of the TPH-DRO and TPH-GRO analytical results that the release had occurred at the time when the UST was actively used. Prior to the excavation of the USTs, approximately 250-gallons of heating oil and sludge was pumped from one of the tanks while the other tank was dry. Since the UST excavation was not witnessed by WPC, it is unclear as to which tank held a measurable quantity of heating oil prior to excavation. See Figure 4 for a schematic of the UST.

Brief description of site characteristics

The property consists of two parcels that total approximately 9,750 square feet. The property is covered by typical grassy vegetation associated with residential development. The property has been used for residential purposes and historically for agricultural operations (which have now ceased). Commercial development bounds the property to the

north, south, and east while residential development exists to the west. West Summit Avenue bounds the property to the west. Refer to Figure 2 and Figure 3.

The 1993 United States Geological Survey (USGS) "Charlotte West, NC" quadrangle topographic map indicates that the range in elevation across the property is from 680 feet to 720 feet above mean sea level (Figure 1). The contour lines indicate the general direction of downward slope is to the northwest. Based on this information, it is assumed that groundwater flow is also to the northwest. There are no distinct water bodies on the property. According to a review of the 1980 Mecklenburg County Soil Survey by the United States Department of Agriculture (USDA), the dominant soil type is Urban Land.

No wells are located on the site.

Initial abatement actions

The top layer of soil was removed and staged on-site to uncover the UST on April 10, 2008. Approximately 250-gallons of fuel oil and sludge were pumped from one of the USTs prior to excavation, while the second UST was dry. Since the UST excavation was not witnessed by WPC, it is unclear as to which tank held a measurable quantity of heating oil prior to excavation. Free product was not observed in the resultant cavity once both tanks were removed from the ground. The excavation was roped off by using caution tape. This was completed to mitigate the safety hazards associated with the excavation. On April 16, 2008 two base soil samples were collected from the long axis of each tank location for TPH-DRO and TPH-GRO analysis. Additional soil samples were collected on April 18, 2008 from the long axis of each tank location for TPH-DRO and TPH-GRO analysis. The excavation was roped off by using caution tape. This was completed to mitigate the safety hazards associated with the excavation. The excavation was ramped once excavation of the impacted soils took place to mitigate safety hazards.

On June 2 and June 3, 2008, the excavation was continued and additional impacted soils were removed from the cavity. The excavated soils were temporarily staged on-site before they were loaded into 16 ton dump trucks for disposal at a licensed off-site facility.

The finished excavation evidenced non-impacted soils on the sidewalls and base. The soils were reddish brown silt and clay with some partially weathered rock (indicative of the native soils) and the Flame-Ionization Detector (FID) readings on selected samples ranged from zero to four parts per million.

C. INITIAL RESPONSE AND ABATEMENT ACTION

Initial response actions performed

The UST was removed from the ground on April 10, 2008, however WPC was not on site at the time of the removal. On April 16 and April 18, 2008 a total of four base excavation soil samples (UST-1, UST-1A, UST-2, and UST-2A) were collected along the long axis of each former tank location (two samples per tank) and submitted for TPH-DRO and TPH-GRO analysis (Figure 5). The resultant analytical data confirmed that a petroleum release from the tank had occurred. The 24-hour Release Report and UST Leak Reporting Form (UST-61) was prepared and submitted via fax to the NCDENR – Mooresville Regional Office on May 15, 2008.

Prior to the UST being removed from the property, the previous property owner reported that the tank had not been used since 1999 and that no measurable fuel oil remained in the tank. This fact, coupled with the removal of the UST from the property eliminated further contribution to the confirmed release.

Once the tank was removed from the ground, corrosion pitting was observed on the exterior shell of the UST. It is suspected that the resultant soil impacts are a result of a release of petroleum product due to corrosion pitting on the tank.

Initial abatement actions performed

Once the UST was excavated and confirmation soil samples were collected from the base of the excavation, the resultant cavity was bounded by caution tape to reduce the hazards associated with an open excavation.

D. EXCAVATION OF CONTAMINATED SOIL

Source and estimated extent of soil contamination

When the UST was uncovered on April 10, 2008 and removed from the ground, the soils beneath the base of the UST exhibited light grey soil staining. The sidewalls of the excavation did not exhibit any soil staining; the soils were red brown silty clay.

Once the confirmation (of a release) soil samples were returned from Pace Analytical Laboratories, the TPH-DRO concentrations ranged from 15,000 to 16,700 mg/kg (from two

samples) and the TPH-GRO concentrations ranged from 58.7 to 83.3 mg/kg. Two additional soil samples were also tested with TPH-DRO concentrations ranging from 29.9 to 1,470 mg/kg and the TPH-GRO being non-detectable. Based on these confirmation soil results as well as visual observations, it was suspected that the primary area of impact would be the floor of the excavation.

The horizontal limits (length and width) of the excavation were advanced during over-excavation activities. The length of the excavation was extended 14 feet and the width extended 12 feet. The floor of the excavation was extended to 10 feet below ground surface. The finished excavation limits were 29 feet long, 25 feet wide and 16 feet deep (below ground surface).

Groundwater nor bedrock were encountered during over-excavation activities.

Excavation process

On June 2 and June 3, 2008, WPC was on site to excavate petroleum impacted soils from the former UST location. A contractor (Tri State) obtained by Charlotte Pipe and Foundry assisted with the field activities, which included loading and transport of impacted soils to an off-site disposal facility and backfilling the excavation with clean fill. A track hoe was utilized to advance the depth of the initial excavation (which was six feet below grade) to remove petroleum impacted soils. Once impacted soils were removed from the excavation, they were temporarily staged on two layers of six Mil plastic pending placement in a 16 ton dump truck for transport off-site to a licensed facility.

A Flame Ionization Detector (FID) was utilized to selectively screen the soils as they were being removed from the subsurface. The FID was calibrated by Enviro-Equipment, Inc. using 500 ppm methane gas. The calibration gas concentration of 502 ppm compared with the FID reading of 504 ppm (within the tolerance range of +/- 125 ppm). The zero air span was read by the FID as -0.15 ppm (within the tolerance range of <3 ppm).

The excavated soils were red brown silty clay. Impacted soils exhibited light grey staining. A total of 133 cubic yards (199 tons) of soil was excavated and transported off-site to BFI/CMS Landfill in Concord, North Carolina.

The excavation ceased at 16 feet bgs. Non-impacted soils, exhibiting no soil staining or measurable FID readings were encountered at the base, southern wall, northern wall, and western wall. The eastern wall exhibited no soil staining but an FID a reading of 4 ppm.

Post-excavation confirmation soil sampling

Post-excavation confirmation soil sampling was completed on June 3, 2008. A soil sample from each sidewall and one soil sample from the base of the excavation was collected for

Volatile Organic Compound (VOC) analysis via United States Environmental Protection Agency (USEPA) Method 8260, Semi-Volatile Organic Compound (SVOC) analysis via USEPA Method 8270, Volatile Petroleum Hydrocarbon analysis via Massachusetts Department of Environmental Protection (MADEP) method and Extractable Petroleum Hydrocarbon analysis via MADEP method.

For safety reasons, soils to be submitted for laboratory analysis were retrieved from the excavation using the track hoe. Disposable nitrile gloves were worn to remove a mass of soil from the track hoe bucket and expose soil for analysis.

Soil sample SS-N.WALL was collected from the north sidewall, SS-E.WALL was collected from the east sidewall, SS-S.WALL was collected from the south sidewall, SS-W.WALL was collected from the west sidewall, and SS-MRF/BASE was collected from the base of the excavation. Soil samples SS-N.WALL was collected six feet above the base of the excavation (ten feet below ground surface). SS-E.WALL was collected four feet above the base of the excavation (twelve feet below ground surface). SS-W.WALL was collected six and half feet above the base of the excavation (nine and a half feet below ground surface). SS-MRF/BASE was collected from the base of the excavation (sixteen feet below ground surface. Refer to Figure 3 and Figure 6 for soil sample locations.

No impacted soils remained in the excavation.

Soil Investigation

A soil investigation was not completed following the excavation. No previous soil investigation was completed on the subject property.

Disposal of contaminated soil

Approximately 133 cubic yards (199 tons) of impacted soil was excavated from the subject property. The soil was temporarily stockpiled on two layers of six Mil plastic before it was loaded into 16 ton dump trucks for off-site disposal. The impacted soils were transported by Tri State to the BFI/CMS Landfill in Concord, North Carolina for disposal.

Conclusions

Subsequent cleanup activities included the excavation of suspected petroleum impacted soil from the site within the vicinity of the former UST. Approximately 199 tons of suspect soils were removed. Laboratory analyses of confirmation soil sampling of the excavation sidewalls and base suggest that soil excavation was an effective remedial methodology.

Based upon laboratory data from confirmation soil sampling, WPC recommends that NCDENR grant a notice of No Further Action. No further environmental assessment or remedial action appears warranted at the present time.

Table B-1: Site History - UST/AST System Information

Revision Dat 8/1/2008 Incident Number and Name: Incident Number 36493; Charlotte Pipe and Foundry 5

UST ID Number	Current/Last Contents *	Previous Contents *	Capacity (in gallons)	Construction Details **	Tank Dimensions	Description of Associated Piping and Pumps	Date Tank Installed	Status of UST ***	Was release associated with the UST System?
1	Heating Oil No. 2	Heating Oil No. 2	550	Steel (single-walled)	6 feet length; 4.0 feet diameter	Piping removed from UST prior to removal from the subsurface	Unknown	Permanently closed by removal (April 10, 2008)	Yes
2	Heating Oil No. 2	Heating Oil No. 2	550	Steel (single-walled)	6 feet length; 4.0 feet diameter	Piping removed from UST prior to removal from the subsurface	Unknown	Permanently closed by removal (April 10, 2008)	Yes

Add additional records as necessary

AST ID Number	Current/Last Contents *	Previous Contents *	Capacity (in gallons)	Construction Details **	Tank Dimensions	Description of Associated Piping and Pumps	Date Tank Installed	Status of UST ***	Was release associated with the UST System?

Add additional records as necessary

* Gasoline (unleaded or leaded), diesel, used oil, waste oil, aviation fuel, etc., or pesticides, non-h alogenated or halogenated solvents, etc.

** Fiberglas (single- or double-walled), steel (single- or double-walled), steel with FRP (single- or double-walled), steel with liner, other, unknown.

*** Currently operational, not in use or temporarily closed (specify date), permanently closed in place (specify date), permanently closed by removal (specify date).

Table B-2: Site History - UST Owner and Operator Information

Revision Date: 8/01/08 Incident Number: Incident #36493 Charlotte Pipe and Foundry 5

UST ID Number	1		Facility ID Number	Unregulated Site
Name of Owner			Dates of Operation (mm/dd/yy to mm/dd/yy)	
Charlotte Pipe & Foundry			Unknown to 04/10/08	
Street Address				
624 West Summit Avenue				
City		State	Zip	Telephone Number
Charlotte		NC	28203	704-348-5408
Name of Operator			Dates of Operation (mm/dd/yy to mm/dd/yy)	
Charlotte Pipe & Foundry			Unknown to 04/10/08	
Street Address				
1335 South Clarkson Street				
City		State	Zip	Telephone Number
Charlotte		NC	28203	704-348-5408

UST ID Number	2		Facility ID Number	Unregulated Site
Name of Owner			Dates of Operation (mm/dd/yy to mm/dd/yy)	
Charlotte Pipe & Foundry			Unknown to 04/10/08	
Street Address				
624 West Summit Avenue				
City		State	Zip	Telephone Number
Charlotte		NC	28203	704-348-5408
Name of Operator			Dates of Operation (mm/dd/yy to mm/dd/yy)	
Charlotte Pipe & Foundry			Unknown to 04/10/08	
Street Address				
1335 South Clarkson Street				
City		State	Zip	Telephone Number
Charlotte		NC	28203	704-348-5408

Add additional records as necessary

Table B-3 **Summary of Soil Sampling Results**

Revision Date: 8/01/08 Incident Number and Name: Incident Number 36493; Charlotte Pipe and Foundry Facility ID#: Unregulated Site

Sample ID	Date Collected (m/dd/yy)	Source Area (eg. Tank pit 1)	Sample Depth (ft BGS)	Incident Phase (Closure, 20 Day, LSA, etc.)	TPH-DRO (EPA 8015)	TPH-GRO (EPA 8015)	MADEP EPH NC	MADEP VPH NC	SVOC (EPA 8270)	VOC (EPA 8260)				
UST-1	4/16/2008	Base of tank pit	6	Closure	16,700 mg/kg	83.3 mg/kg								
UST-2	4/16/2008	Base of tank pit	6	Closure	15,000 mg/kg	58.7 mg/kg								
UST-1A	4/18/2008	Base of tank pit	6	Closure	29.9 mg/kg	ND								
UST-2A	4/18/2008	Base of tank pit	6	Closure	1,470 mg/kg	ND								
SS-N.WALL	6/3/2008	North sidewall	10	Over-excavation			ND	ND	ND	ND				
SS-E.WALL	6/3/2008	East sidewall	12	Over-excavation			ND	ND	ND	ND				
SS-S.WALL	6/3/2008	South sidewall	11	Over-excavation			ND	ND	ND	ND				
SS-W.WALL	6/3/2008	West sidewall	9.5	Over-excavation			ND	ND	ND	ND				
SS-MRF/BASE	6/3/2008	Base of tank pit	16	Over-excavation			ND	ND	ND	ND				
Soil to groundwater MSCC (mg/kg)														
Residential MSCC (mg/kg)														
Industrial/Commercial MSCC (mg/kg)														

NOTE: There were non-detected results for all constituents in the VPH, EPH, SVOC and VOC analysis
Indicate method detection limit for contaminants when analyzed, but not detected (e.g., <1, 10, 42)
List any contaminant detected above the method detection limit
MSCC = maximum soil contaminant concentration
ft. BGS = feet below ground surface
Results must be reported in mg/kg.
mg/kg = milligrams per kilogram

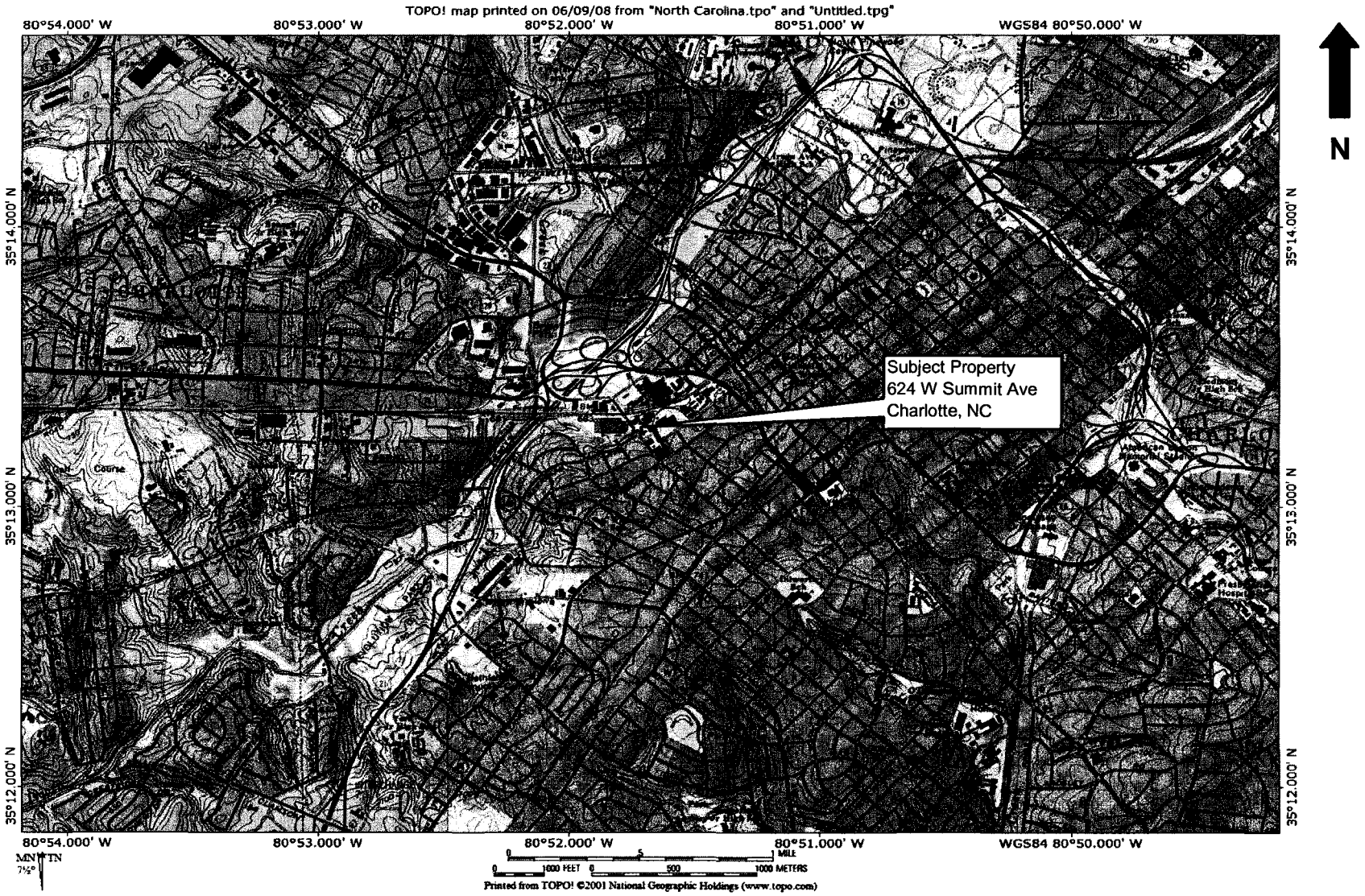

WPC

ENGINEERING, ENVIRONMENTAL & CONSTRUCTION SERVICES

2401 Nevada Blvd.
Charlotte, NC 28273
Phone 704-927-4000
Fax 704-927-4001

Site Topographic Map

624 W Summit Avenue
Charlotte, North Carolina

Source: "Charlotte East, NC" 1988 USGS; "Charlotte West, NC" 1993 USGS

SCALE:	Shown above	DATE:	8/1/2008	PREPARED BY:	MEF	PROJECT NO:	WPC4408.00071	FIG. NO:	1

WPC
ENGINEERING, ENVIRONMENTAL & CONSTRUCTION SERVICES

2401 Nevada Blvd.
Charlotte, NC 28273
Phone 704-927-4000
Fax 704-927-4001

Site Aerial Photograph & Property Boundary Map

624 W Summit Avenue
Charlotte, North Carolina

Source: "Mecklenburg County GIS"

SCALE:	Shown above	DATE:	8/1/2008	PREPARED BY:	MEF	PROJECT NO:	WPC4408.00071	FIG. NO:	2

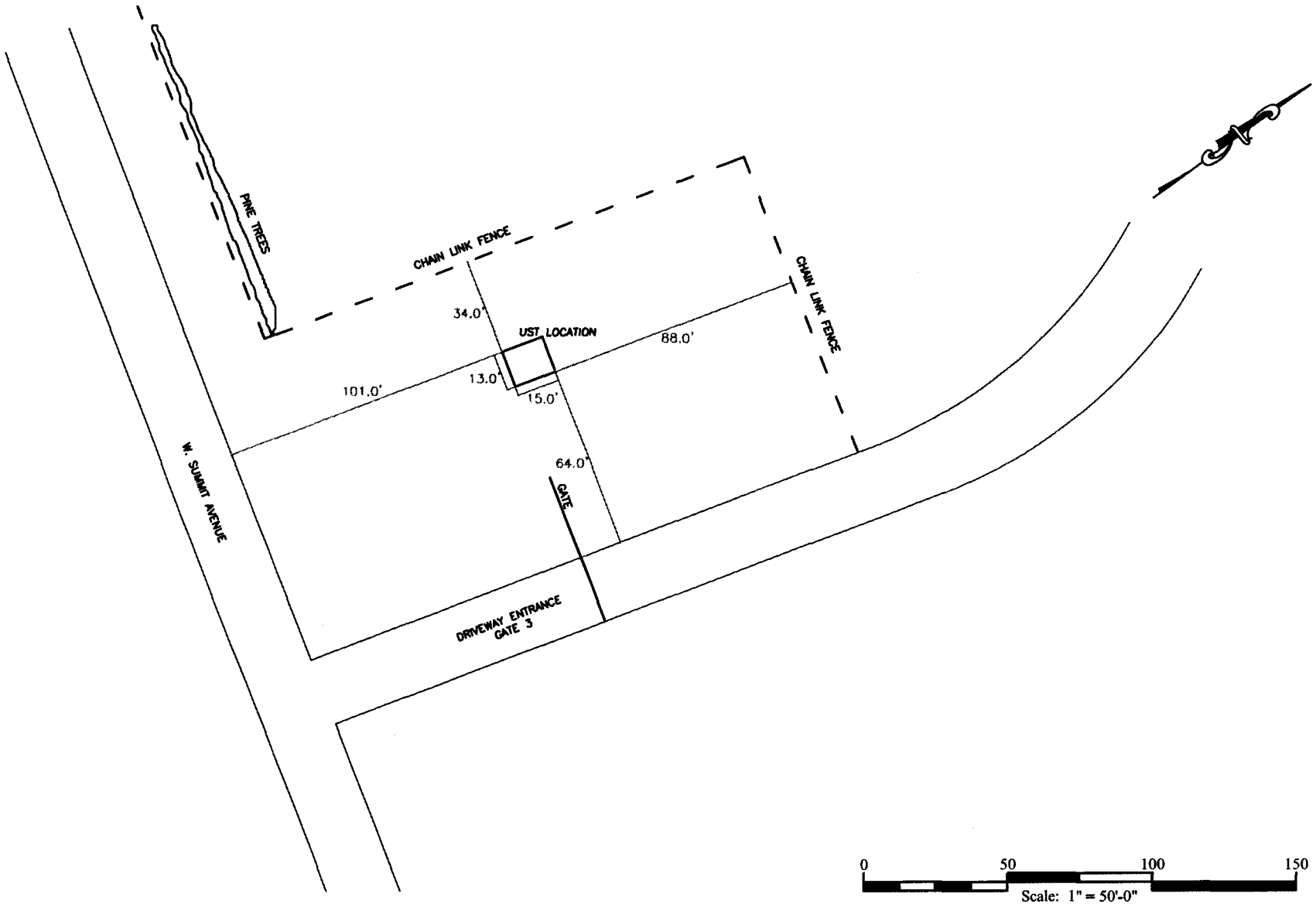

Drawn By: BWS
Approved By: MEF
Project Number: WPC4408.00071
Date: 06.26.08
Scale: As Noted

WPC
ENGINEERING, ENVIRONMENTAL & CONSTRUCTION SERVICES
2401 Nevada Boulevard
Charlotte, North Carolina 28273
tel. 704.927.4000
fax. 704.927.4001
www.wpceng.com

UST EXCAVATION
CHARLOTTE PIPE & FOUNDRY
CHARLOTTE, NC

FIGURE 3. SITE MAP & UST EXCAVATION LIMITS

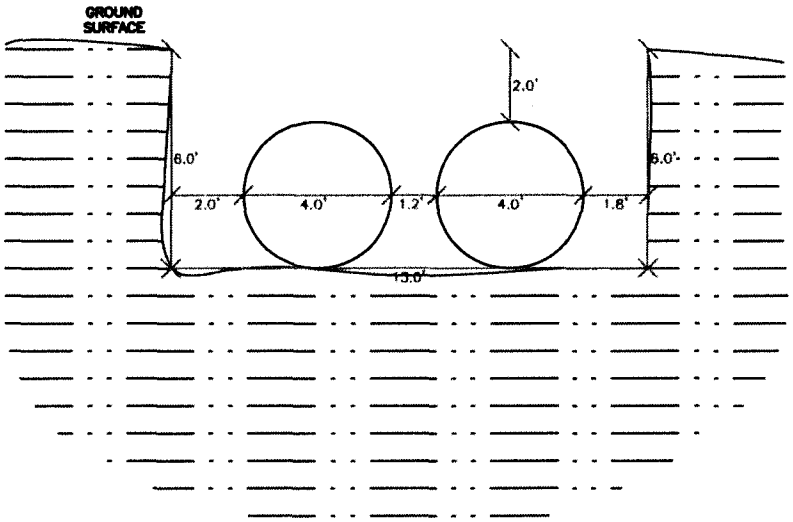

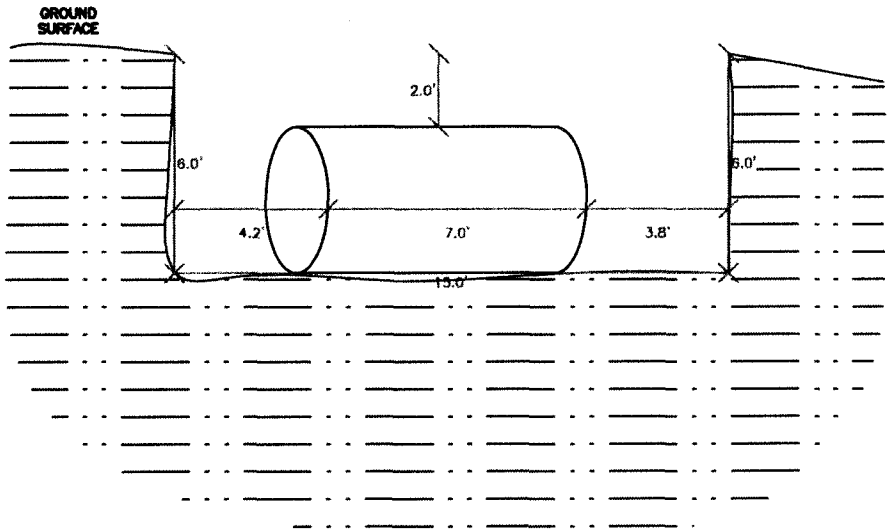

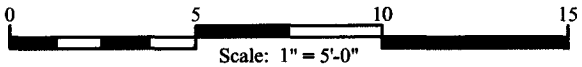

Drawn By: BWS
Approved By: MEF
Project Number: WPC4408.00071
Date: 06.26.08
Scale: As Noted

WPC
ENGINEERING, ENVIRONMENTAL & CONSTRUCTION SERVICES
2401 Nevada Boulevard
Charlotte, North Carolina 28273
tel. 704.927.4000
fax. 704.927.4001
www.wpceng.com

UST EXCAVATION
CHARLOTTE PIPE & FOUNDRY
CHARLOTTE, NC

FIGURE 4. UST LOCATION, ORIENTATION & DETAILS

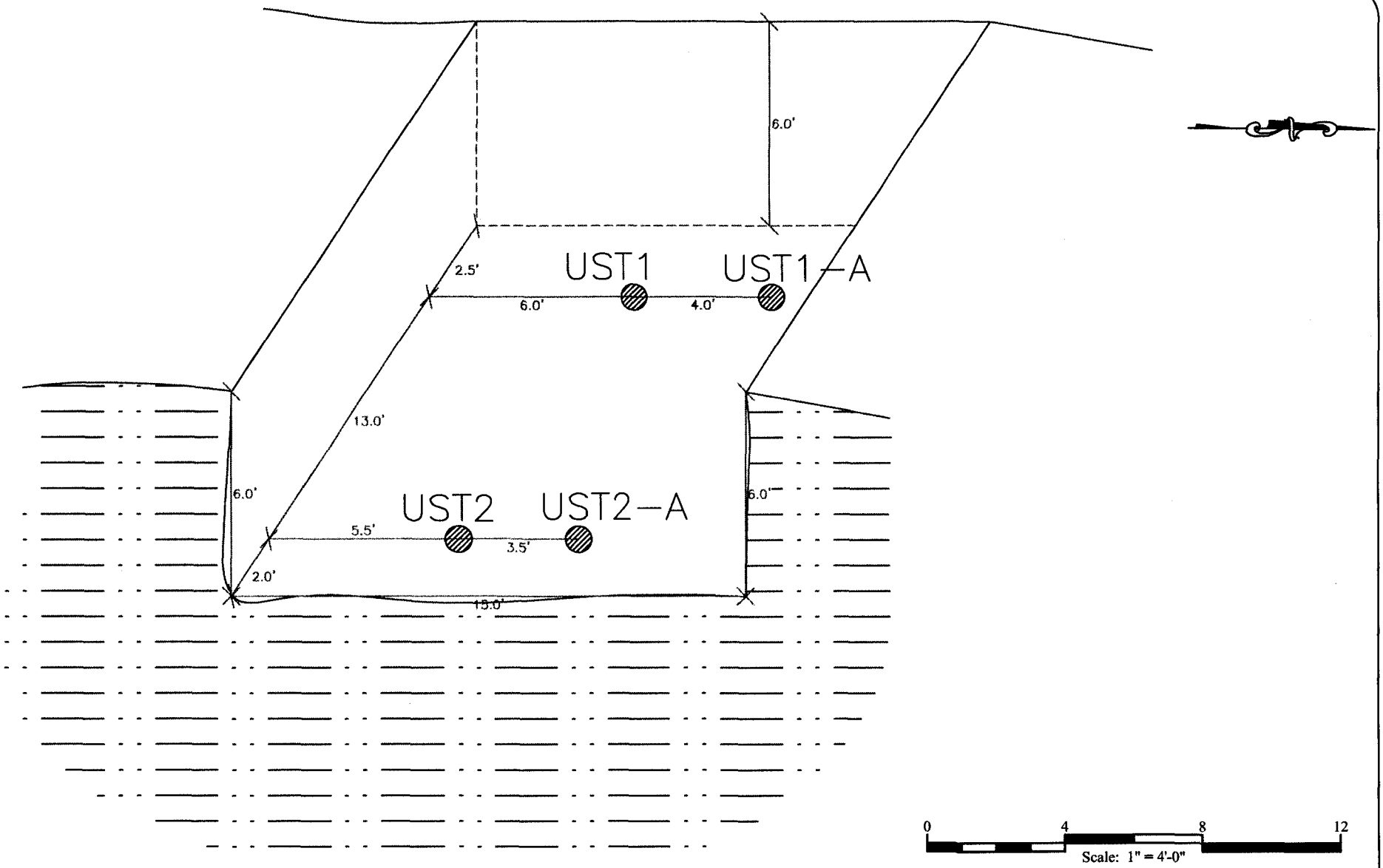

Drawn By: BWS
Approved By: MEF
Project Number: WPC4408.00071
Date: 06.26.08
Scale: As Noted

WPC
ENGINEERING, ENVIRONMENTAL & CONSTRUCTION SERVICES
2401 Nevada Boulevard
Charlotte, North Carolina 28273
tel. 704.927.4000
fax. 704.927.4001
www.wpceng.com

UST EXCAVATION
CHARLOTTE PIPE & FOUNDRY
CHARLOTTE, NC

FIGURE 5. INITIAL SOIL SAMPLING
(POST UST REMOVAL) CONFIRMATION OF RELEASE

Z:\OFFICE2\JOBS\2008 JOBS\WPC44 - ENV\WPC4408.00071 (CHARLOTTE PIPE AND FOUNDRY UST CLOSURE)\FIGURES\WPC4408.00071 FIGURES 3-6

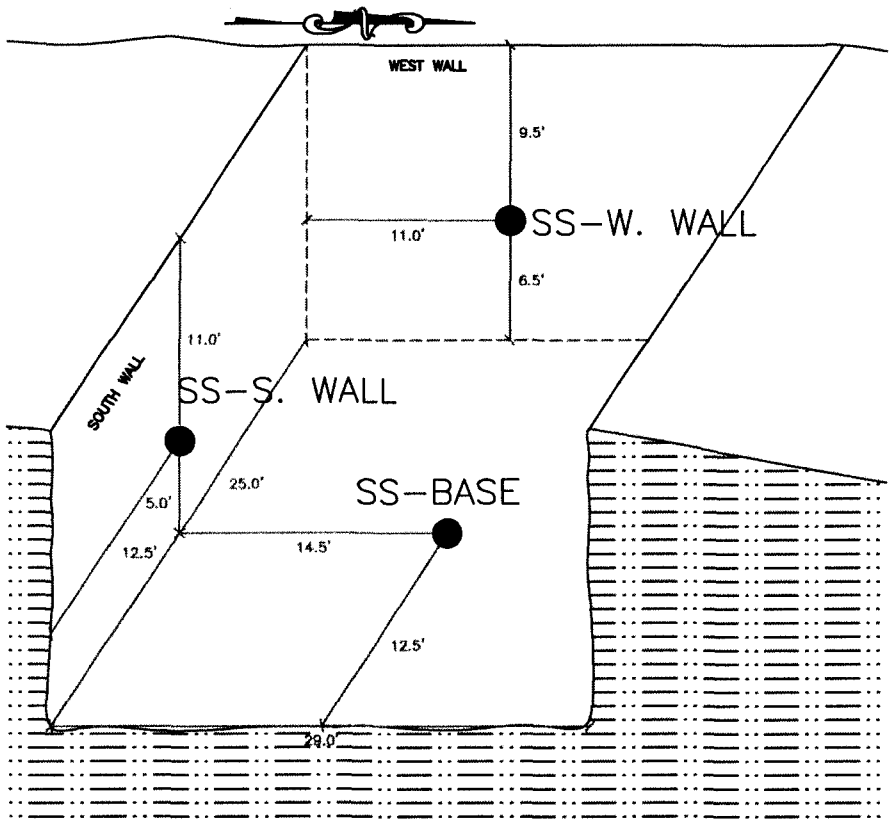

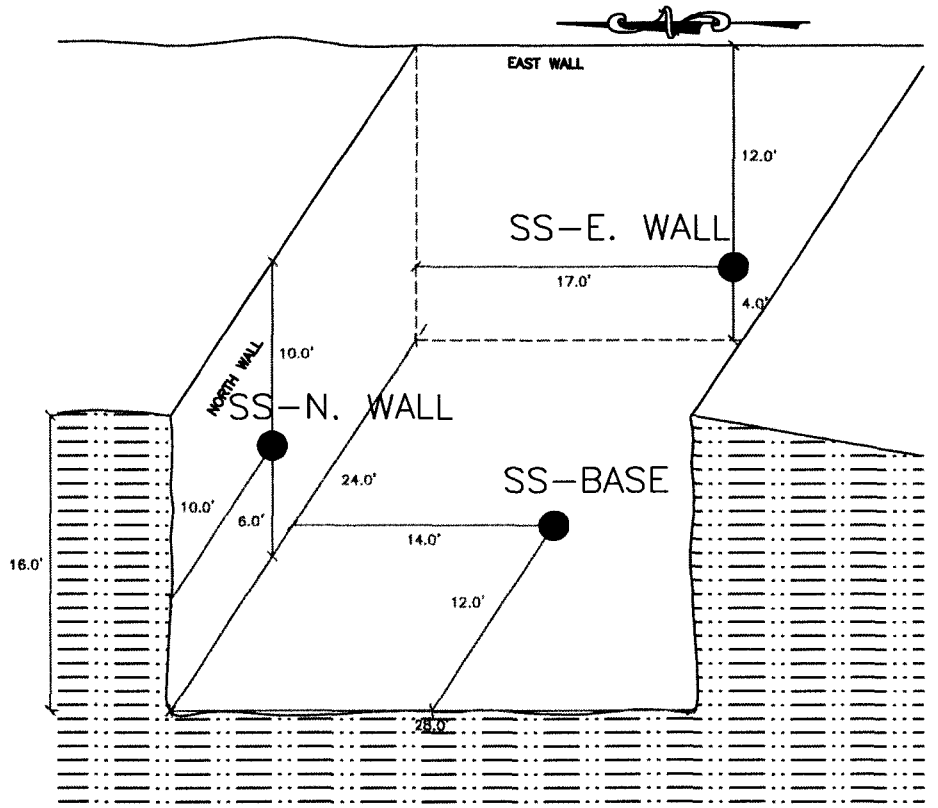

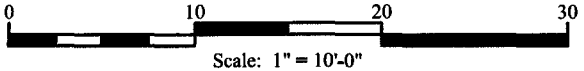

Scale: 1" = 10'-0"

Drawn By: BWS
Approved By: MEF
Project Number: WPC4408.00071
Date: 06.26.08
Scale: As Noted

WPC
ENGINEERING, ENVIRONMENTAL & CONSTRUCTION SERVICES
2401 Nevada Boulevard
Charlotte, North Carolina 28273
tel. 704.927.4000
fax. 704.927.4001
www.wpceng.com

UST EXCAVATION
CHARLOTTE PIPE & FOUNDRY
CHARLOTTE, NC

FIGURE 6. LOCATION OF POST EXCAVATION SOIL SAMPLING

APPENDIX I
SITE HEALTH AND SAFETY PLAN

SITE SAFETY & HEALTH PLAN

Charlotte Pipe & Foundry Summit Avenue UST Closure

624 West Summit Avenue

Charlotte, Mecklenburg County, North Carolina 28203

Prepared for:

Charlotte Pipe & Foundry

1335 South Clarkson Street

Charlotte, North Carolina 28203

Prepared by:

WPC

2401 Nevada Boulevard

Charlotte, North Carolina 28273

April 2008

WPC Project No. WPC4408.00071

Site Safety and Health Plan

624 West Summit Avenue
Charlotte, North Carolina 28203

Proposed Date of Work	April 2008
Land Use Category	Commercial
Current Property Owner	Charlotte Pipe & Foundry 1335 South Clarkson Street Charlotte, North Carolina 28203
Site Contact	David Waggoner (704) 348-5408
Consultant	WPC 2401 Nevada Boulevard Charlotte, North Carolina 28273 (704) 927-4000 Attention: Mark Fox
Latitude/Longitude	35.3225/80.8508

Prepared by

Ben Swift
Staff Scientist

Mark Fox
Project Manager

Table of Contents

1. Project Name 2

   2. Facility Name and Identification Number 2

   3. Site Address 2

   4. Contact Personnel and Telephone Number 2

   5. Proposed date of Field Activities 2

   6. Directions to Project Site 2

   7. Site Visit Objective 2

B. WPC Site Investigative Personnel 3

C. Site Safety and Health Plan Preparation 3

D. Project Site Background and Status 3

E. Emergency Contact Information 3

   1. Emergency Numbers 4

   2. Directions to Hospital 4

F. Safety, Health Risks, and Hazard Information 4

   1. SUBSTANCE 4

   2. HEALTH RISKS OF EXPOSURE 4

   3. FIRST AID 5

   4. CHEMICAL/PHYSICAL PROPERTIES 5

   5. ADDITIONAL INFORMATION 5

G. Site Specific Information 6

H. Personal Protective Equipment 6

I. Site Monitoring Procedures 6

J. Site Decontamination Procedures 6

A. Site Information

1. **Project Name**

   West Summit Avenue UST Closure

2. **Facility Name and Identification Number**

   West Summit Avenue UST Closure, Parcel ID 07326203

3. **Site Address**

   624 West Summit Avenue, Charlotte, North Carolina 28203

4. **Contact Personnel and Telephone Number**

   David Waggoner (704) 348-5408

5. **Proposed date of Field Activities**

   April 16, 2008

6. **Directions to Project Site**

   From WPC office, take Interstate 77 North to Interstate 277. Take Carson Blvd. exit. Turn right onto Mint Street. Turn right onto Summit Avenue. Site will be on the right side.

7. **Site Visit Objective**

   To uncover two known USTs located on the property, pump out any residual fuel and sludge and remove the tanks from the ground for off-site disposal. Samples will then be submitted for laboratory analysis to determine the presence of petroleum impacts, if any. All excavation activities will be handled by an in-house (Charlotte Pipe & Foundry) contractor.

   Because of the nature of the proposed objective, hazardous conditions may arise at the project site during field activities. **WPC will not be responsible for the health and safety of personnel (authorized or unauthorized), equipment, or property at the proposed work area.** The tasks performed by WPC will be primarily limited to observing, sampling, and reporting to NCDOT.

B. WPC Site Investigative Personnel

Personnel/Title	*Responsibilities*
Mark Fox/ Project Manager	Project Management,
Ben Swift/Staff Scientist	Observations and Monitoring, Soil Screening& Sampling,

C. Site Safety and Health Plan Preparation

Prepared by: Ben Swift Date: 04/09/08

Reviewed by: Mark E. Fox Date: 04/09/08

D. Project Site Background and Status

Two millhouses were located on the subject property and the subject USTs stored heating oil for the homes. The millhouses were razed but the tanks remained in the ground. The USTs are being removed to complete the closure of the property.

E. Emergency Contact Information

In the event of an emergency, the project site will be evacuated and emergency services dispatched by calling **911**.

Emergency Numbers

EMERGENCY MANAGEMENT	311 (within Charlotte)
POLICE:	CALL 911
FIRE:	CALL 911
ADMINISTRATION:	City Manager's Office, 311 (within Charlotte)
HEALTH SERVICES:	Mecklenburg County Health Department, (704) 336-4700
POISON CONTROL:	National Hotline, (800) 282-5846
NRC:	National Response Center, (800) 424-8802
HOSPITAL:	Carolinas Medical Center 1000 Blythe Boulevard Charlotte, North Carolina 28203 (704) 355-3398

8. Directions to Hospital

Refer to directions at the back of this plan.

F. Safety, Health Risks, and Hazard Information

9. SUBSTANCE

Petroleum-based product.

10. HEALTH RISKS OF EXPOSURE

Primary routes of exposure include eye contact, skin contact and absorption, ingestion, and inhalation. Symptoms of exposure include nausea, vomiting, diarrhea, airway irritation, dizziness, drowsiness, weakness, fatigue, headache, unconsciousness, and loss of coordination. Over exposure to this material may cause anemia, lung and liver damage, and cancer.

Eye: May cause eye irritation.

Skin: May cause skin irritation, with drying and cracking of the skin with prolonged exposure.

Ingestion: Small amounts of ingestion are not likely to cause harmful effects; however significant quantities may cause vomiting and lung injury.

Inhalation: Inhalation of large amounts diesel fuel vapors may be harmful and result in significant injury.

11. FIRST AID

Eye: Removal individual away from exposure into fresh air. Flush eyes gently with water. **Seek Medical Attention.**

Skin: Remove contaminated clothing and discard; wash exposed area with soap and water. If symptoms of exposure occur, **Seek Medical Attention.**

Ingestion: **Seek Medical Attention.** Do not give the individual anything by mouth. Do not induce vomiting unless specifically directed by medical personnel. If the individual become drowsy or unconscious, place individual on their left side with their head down. **Do Not Leave Individual Unattended.**

Inhalation: Remove individual from exposure into fresh air. If symptoms of exposure occur, **Seek Medical Attention.** Keep person warm and quiet and observe breathing for difficulty.

12. CHEMICAL/PHYSICAL PROPERTIES

Flash Point:	> 135 degree Fahrenheit
Explosive Limit:	Not Available
Autoignition	Not Available
Color:	Red Liquid

13. ADDITIONAL INFORMATION

Combustion of Diesel Fuel may result in the formation of carbon monoxide, carbon dioxide, and various hydrocarbons. Diesel Fuel Vapors are heavier than air, may travel along the ground, move by ventilation, and ignited by heat, pilot lights, flames, and other ignition sources located at a distance.

Hazard Evaluation

NFPA Rating: Health – 1, Flammability – 2, Reactivity – 0.

G. Site Specific Information

Utilities will be marked prior to the commencement of excavation activities. It is known that a natural gas line and municipal water line are located in the vicinity of the UST. Electrical power lines are located overhead.

NO SMOKING WILL BE PERMITTED AT THE PROJECT SITE DURING FIELD ACTIVITIES

H. Personal Protective Equipment

The most probable source of exposure during planned assessment activities is skin contact with soil and groundwater contaminated with dissolved constituents such as gasoline fuel. Based on the evaluation of potential hazards, the following level of personal protective equipment (PPE) has been designated for the proposed work area and tasks.

PPE: **Level D**

This level of protection includes the use of proper work attire, steel toe safety boots, hard hat, safety glasses, and hearing protection. In the event that tasks require direct contact with contaminated soils or other materials, nitrile gloves will be worn.

If field observations and monitoring suggest the Level of PPE should be higher, field activities will cease, the project site will be evacuated, and the potential hazards will be reassessed.

I. Site Monitoring Procedures

Air monitoring for volatile organic vapors, oxygen, and potential explosion hazards will be performed during site activities as described below:

Equipment	Frequency	Action Level	Response
FID	Continuously	50 ppm	Stop Activities and Ventilate Area

J. Site Decontamination Procedures

Personnel with direct exposure to contaminated soil and other materials will be thoroughly decontaminated before leaving the project site. PPE including gloves and clothing exposed to

contaminated soil and other materials will be discarded. Decontamination will include the use of water, detergent, wash cloths, and towels.

Equipment with direct exposure to contaminated soil and other materials will be thoroughly decontaminated before leaving the project site by washing with detergents and rinsing with water. Rinseate containing petroleum contaminated soil will be conferred to the ground pursuant to 15 NCAC 2H .217.

NO CONFINED SPACES WILL BE ENTERED.

MAPQUEST.

Visit your Ford or Lincoln Mercury Dealership for service on the go and save.
THE WORKS $39.95 OR LESS
FUEL SAVER PACKAGE
• Motorcraft® Oil and filter change • Inspect brake system • Rotate four tires • Test battery and more
See participating dealership for details through 8/31/08.
Get Details
GENUINE PARTS & SERVICE
COME IN. KEEP GOING.

A: 624 W Summit Ave, Charlotte, NC 28203-4353

START	**1:** Start out going NORTHWEST on W SUMMIT AVE toward S CLARKSON ST.	0.2 mi
	2: Turn LEFT onto S CLARKSON ST.	0.1 mi
NORTH 277	**3:** Merge onto I-277 N/US-74 E toward I-77.	1.6 mi
EXIT	**4:** Take the KENILWORTH AVE/NC-16 S/THIRD ST/FOURTH ST exit, EXIT 2A.	0.1 mi
	5: Take the KENILWORTH AVE ramp.	0.2 mi
	6: Turn RIGHT onto KENILWORTH AVE.	0.4 mi
	7: Turn LEFT onto E MOREHEAD ST.	0.3 mi
	8: Turn SLIGHT RIGHT onto S KINGS DR.	0.1 mi
	9: Turn RIGHT onto MEDICAL CENTER DR.	0.1 mi
	10: Turn RIGHT onto BLYTHE BLVD.	0.0 mi
END	**11:** End at 1000 Blythe Blvd Charlotte, NC 28203-5812	

Estimated Time: 6 minutes Estimated Distance: 3.07 miles

B: 1000 Blythe Blvd, Charlotte, NC 28203-5812

Total Time: 6 minutes Total Distance: 3.07 miles

Get MapQuest driving directions & free directory assistance: **1-800-FREE411** (1-800-373-3411).

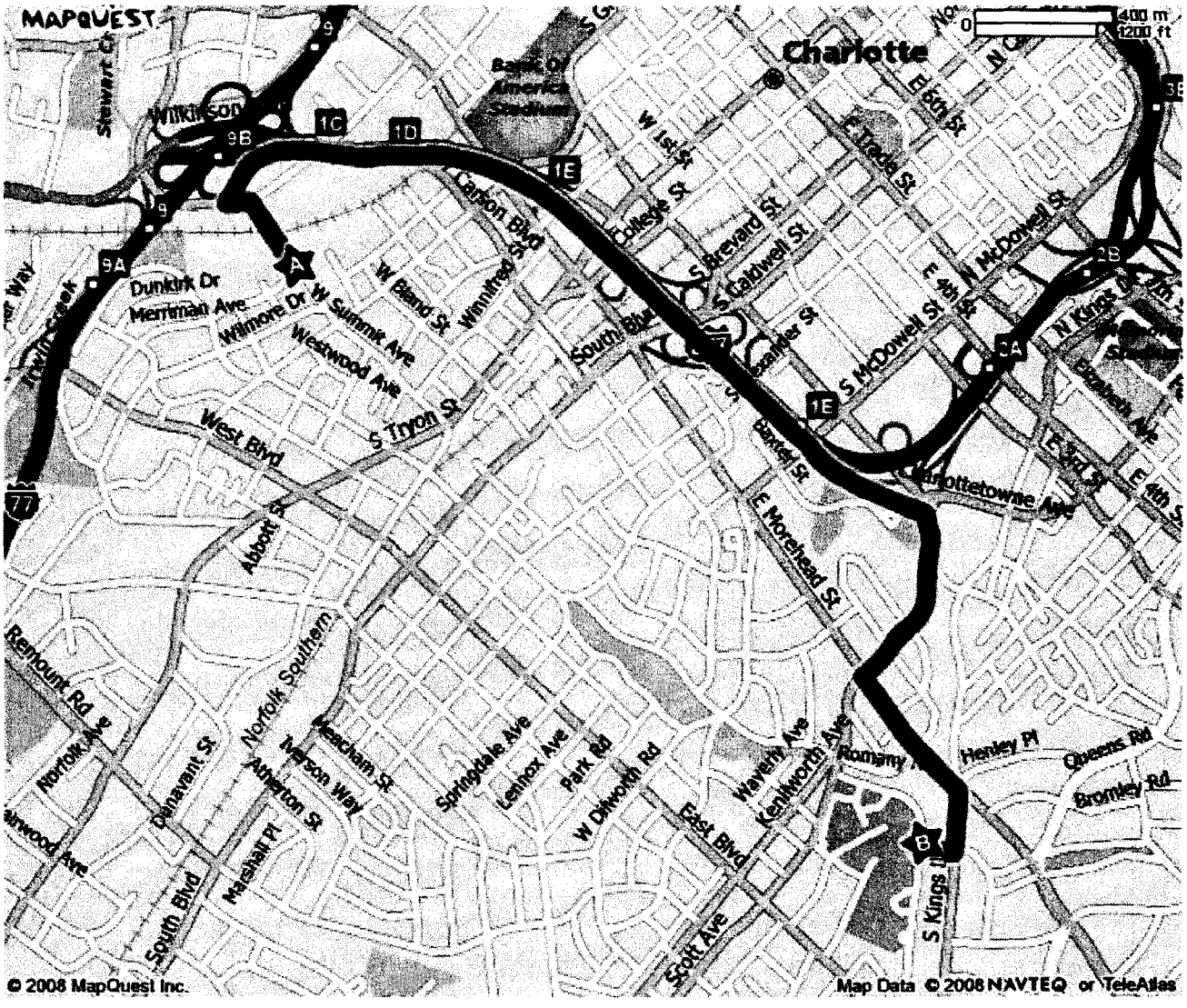

All rights reserved. Use subject to License/Copyright Map Legend
Directions and maps are informational only. We make no warranties on the accuracy of their content, road conditions or route usability or expeditiousness. You assume all risk of use. MapQuest and its suppliers shall not be liable to you for any loss or delay resulting from your use of MapQuest. Your use of MapQuest means you agree to our Terms of Use

APPENDIX II
CERTIFICATE OF UST DISPOSAL AND SOIL DISPOSAL MANIFESTS

April 18, 2008

Charlotte Pipe & Foundry Co.
1335 S. Clarkson Street
Charlotte, NC 28208

Re: Metal recycling for (2) 550-gallon steel tanks

To Whom It May Concern:

Please allow this letter to serve as documentation for metal recycling from the Charlotte Pipe & Foundry Co. in Charlotte, NC. Two RCRA empty steel tanks were received at Haz~Mat Transportation & Disposal, 221 Dalton Ave, Charlotte, NC and subsequently rinsed, bulked and taken for recycling to Atlantic Scrap & Processing, 419 Atando Ave, Charlotte, NC.
If you should have any questions, feel free to call (704) 332-5600.

Sincerely,

Neil Danziger

Operations Manager

HAZ~MAT
P. O. BOX 37392, 221 DALTON AVE., CHARLOTTE, N.C. 28237, (704) 332-5600, FAX (704) 375-7183

HAZ~MAT

TRANSPORTATION AND DISPOSAL
P.O. BOX 37392 • CHARLOTTE, N.C. 28237
(704) 332-5600
FAX (704) 375-7183

Manifest No. 38960

P.O. No.

Job No.

NON-HAZARDOUS SPECIAL WASTE

Section I. GENERATOR (Generator complete all of Section I)

GENERATOR LOCATION
NAME: Charlotte Pipe & Foundry Co.
ORIGINATING ADDRESS: 1335 S. Clarkson Street
MAILING ADDRESS:
CITY: Charlotte STATE: NC ZIP: 28208
PHONE NO.: 704-332-2647
CONTACT NAME: David W.
DES. OF WASTE: RCRA empty 550 gal. steel tank(s) for recycling

WORK CONTRACTED BY
Bill To (If different from information at left)
NAME:
ADDRESS:
CITY: STATE: ZIP:
PHONE NO.:
CONTACT NAME:

No.	Type	Units	Quantity
01	DT	P	2500

Section II. INVOICE INFORMATION GALLONS DRUMS

DESCRIPTION	QUANTITY		LINE TOTAL	
1. PETROLEUM CONTACT WATER PUMPED FROM TANKS, DRUMS OR AFVR				
2. OFF-SPEC LIGHT OIL, DIESEL OR GAS PUMPED FROM TANKS OR DRUMS				
3. SOLUBLE OILS OR COOLANTS PUMPED FROM STORAGE				
4. SEDIMENT OR SOLIDS VACUUMED FROM CONTAINMENT AREA				
5. 55-GALLON DRUM REMOVED - SOLID OR EMPTY				
6. 55-GALLON DRUM REMOVED - LIQUID				
7.				
8. (2) RCRA EMPTY TANKS For Recycling	VST-1			
9.	VST-2			
10. ARRIVAL TIME: DEPARTURE TIME:				

GENERATOR'S CERTIFICATION: I hereby certify that the above named material is not a hazardous waste as defined by 40 CFR Part 261 or any applicable state law, has been properly described, classified and packaged, and is in proper condition for transportation according to applicable regulations; AND, if the waste is a treatment residue of a previously restricted hazardous waste subject to the Land Disposal Restrictions, I certify and warrant that the waste has been treated in accordance with the requirements of 40 CFR Part 268 and is no longer a hazardous waste as defined by 40 CFR Part 261.

X Agent for Charlotte — Generator Authorized Agent Name
Agent for Charlotte — Signature
04/18/08 — Shipment Date

Section III. TRANSPORTER TRANSPORTER (Generator complete a-d; Transporter I complete e-g; Transporter II complete h-n)

HAZ~MAT

TRANSPORTATION AND DISPOSAL
P.O. BOX 37392 • CHARLOTTE, N.C. 28237

a. Driver Name/Title: Rodney Singleton
b. Phone No.: (704) 332-5600 c. Truck No.: GT-1
Hazardous Waste Transporter Permits
EPA NCR 000003186
EPA NCD048461370
d. Driver Signature — Shipment Date: 04/18/08

TRANSPORTER II

e. Name
f. Address
g. Driver Name/Title
h. Phone No. i. Truck No.
j. Transporter II Permit Nos.
Driver Signature — Shipment Date

Section IV. FACILITY INFORMATION AND CERTIFICATE OF DISPOSAL

Site Name: Haz-Mat Transportation & Disposal, Inc.
Physical Address: 210 Dalton Avenue, Charlotte, N.C. 28206
a. Phone No. 704-332-5600
b. Mailing Address: P.O. Box 37392, Charlotte, N.C. 28237

e: Discrepancy Indication Space

This is to certify that all non-hazardous material removed from above location has been received and will be disposed of in accordance with applicable local, state and federal regulations in the following manner: (1) Petroleum products are blended into a beneficial reusable fuel for use in large industrial burners. (2) Waste waters are to be treated with polymers, pH adjusters, and a flocculant, then flows through a dissolved air flotation system for pretreatment separation, then into the CMUD sanitation sewer system under permit IUP#5012. (3) Sludges from treatment systems are hauled to E.P.A. approved facilities for proper disposal. Manifest and certificate of disposal are on file. (4) Our treatment system operates on a first in, first out basis and product should be processed within seven days.

SIGNATURE OF FACILITY AGENT	DATE	MONTH	DAY	YEAR
Mike Idinot		04	18	08

ORIGINAL - FINAL T.S.D. • YELLOW - DISPOSER • PINK - 1ST T.S.D. • GOLD - GENERATOR

Please print or type
(Form designed for use on elite (12 pitch typewriter)

ALLIED WASTE INDUSTRIES, INC.

251660

NON-HAZARDOUS WASTE MANIFEST

1. Generator's US EPA ID No.

Manifest Document No.

2. Page 1 of

148266

GENERATOR

3. Generator's Name and Mailing Address

Charlotte Pipe & Foundry
1335 S. Clarkson St.
Charlotte, NC 28203

4. Generator's Phone (704) 348-5408

Truck No. Acct#92834 Charlotte Pipe

5. Transporter 1 Company Name: Tri State

6. US EPA ID Number

A. Transporter's Phone

7. Transporter 2 Company Name

8. US EPA ID Number

B. Transporter's Phone

9. Designated Facility Name and Site Address

CMS Landfill
5105 Morehead Rd.
Concord, NC 28027

10. US EPA ID Number

C. Facility's Phone: (704) 782-2004

11. Waste Shipping Name and Description	12. Containers No	Type	13. Total Quantity	14. Unit Wt/Vol
a. Petroleum Contaminated Soil			16200	Lbs.
b.			3150	Tons
c.				
d.				

D. Additional Descriptions for Materials Listed Above

E. Handling Codes for Wastes Listed Above: F31-Y8-7166

15. Special Handling Instructions and Additional Information

16. **GENERATOR'S CERTIFICATION:** I certify the materials described above on this manifest are not subject to federal regulations for reporting proper disposal of Hazardous Waste.

Printed / Typed Name: Charlotte Pipe & Foundry | Signature: [signature] | Month 7 Day 24 Year 08

TRANSPORTER

17. Transporter 1 Acknowledgement of Receipt of Materials

Printed / Typed Name: Tri State | Signature: [signature] | Month 7 Day 24 Year 08

18. Transporter 2 Acknowledgement of Receipt of Materials

Printed / Typed Name | Signature | Month | Day | Year

FACILITY

19. Discrepancy Indication Space

20. Facility Owner or Operator: Cerification of receipt of waste materials covered by this manifest except as noted in item 19.

CMS Landfill

Printed / Type Name: [signature] | Signature: [signature] | Month 7 Day 24 Year 08

GENERATOR'S COPY

AWI Form # 121

BFI/CMS LANDFILL
5105 MOREHEAD RD.,
CONCORD,NC 28027

092834
CHARLOTTE PIPE & FOUNDRY
1335 CLARKSON ST.
CHARLOTTE, NC 28208

Contract: #F31-YB-7166

SITE	TICKET	GRID
Y6	251660	
WEIGHMASTER: SM00094 SHARHONDA M		
DATE IN: 24 July 2008	TIME IN: 2:25 pm	
DATE OUT: 24 July 2008	TIME OUT: 2:25 pm	
VEHICLE: TS1		ROLL OFF
REFERENCE	ORIGIN: MECKLENBURG	

00 Gross Weight 93,060.00 lb
Stored Tare Weight 30,060.00 lb
Net Weight 63,000.00 lb 31.50 TN

Inbound - SCALE TICKET

QTY.	UNIT	DESCRIPTION	RATE	EXTENSION	TAX	TOTAL
31.50	TN	SW-CONT SOIL				
1.00	LD	ENVIRONMENTAL FEE				
1.00	LD	FUEL RECOVERY FEE				

Manifest:148266

THINK SAFETY CHOOSE LIVE

NET AMOUNT
TENDERED
CHANGE
CHECK NO.

EFFECTIVE JULY 1, 2008 THE GATE RATE WILL INCREASE BY $2/ TON.
PLEASE OBEY ALL TRAFFIC SIGNS WITHIN THE LANDFILL.

It's the Right Thing!

SAFETY MEMOS:

Hard hats MUST be worn.
High Visibility vests MUST be worn.
Passengers MUST remain in vehicle at all times.

SIGNATURE

Please print or type
(Form designed for use on elite (12 pitch typewriter)

ALLIED WASTE INDUSTRIES, INC.

25748

NON-HAZARDOUS WASTE MANIFEST

1. Generator's US EPA ID No.

Manifest Document No.

2. Page 1 of

148267

3. Generator's Name and Mailing Address

Charlotte Pipe & Foundry
1335 S. Clarkson St.
Charlotte, NC 28203

4. Generator's Phone (704) 348-5408

Truck No. Acct#92834 Charlotte Pipe

5. Transporter 1 Company Name: Tri State

6. US EPA ID Number

A. Transporter's Phone

7. Transporter 2 Company Name

8. US EPA ID Number

B. Transporter's Phone

9. Designated Facility Name and Site Address

CMS Landfill
5105 Morehead Rd.
Concord, NC 28027

10. US EPA ID Number

C. Facility's Phone (704) 782-2004

11. Waste Shipping Name and Description	12. Containers No	Type	13. Total Quantity	14. Unit Wt/Vol
a. Petroleum Contaminated Soil			9480	Lbs.
b.			3471	Tons
c.				
d.				

D. Additional Descriptions for Materials Listed Above

E. Handling Codes for Wastes Listed Above

F31-Y8-7166

15. Special Handling Instructions and Additional Information

GENERATOR

16. **GENERATOR'S CERTIFICATION:** I certify the materials described above on this manifest are not subject to federal regulations for reporting proper disposal of Hazardous Waste.

Printed / Typed Name: Charlotte Pipe & Foundry | Signature: [signature] | Month 7 | Day 24 | Year 08

TRANSPORTER

17. Transporter 1 Acknowledgement of Receipt of Materials

Printed / Typed Name: Tri State | Signature: [signature] | Month 7 | Day 24 | Year 08

18. Transporter 2 Acknowledgement of Receipt of Materials

Printed / Typed Name | Signature | Month | Day | Year

FACILITY

19. Discrepancy Indication Space

20. Facility Owner or Operator: Cerification of receipt of waste materials covered by this manifest except as noted in item 19.

CMS Landfill

Printed / Type Name: [illegible] | Signature: [illegible] | Month 7 | Day 24 | Year 08

GENERATOR'S COPY

AWI Form # 121

BFI/CMS LANDFILL
5105 MOREHEAD RD.,
CONCORD,NC 28027

092834
CHARLOTTE PIPE & FOUNDRY
1335 CLARKSON ST.
CHARLOTTE, NC 28208

Contract: #F31-Y8-7166

SITE	TICKET	GRID
Y6	251748	

WEIGHMASTER: SM00094 SHARHONDA M

DATE IN	TIME IN
24 July 2008	4:01 pm
DATE OUT	**TIME OUT**
24 July 2008	4:01 pm

VEHICLE	ROLL OFF
TS1	

REFERENCE	ORIGIN
	MECKLENBURG

00 Gross Weight 99,480.00 lb
Stored Tare Weight 30,060.00 lb
Net Weight 69,420.00 lb 34.71 TN

Inbound - SCALE TICKET

QTY.	UNIT	DESCRIPTION	RATE	EXTENSION	TAX	TOTAL
34.71	TN	SW-CONT SOIL				
1.00	LD	ENVIRONMENTAL FEE				
1.00	LD	FUEL RECOVERY FEE				

Manifest:148267

NET AMOUNT
TENDERED
CHANGE
CHECK NO.

EFFECTIVE JULY 1, 2008 THE GATE RATE WILL INCREASE BY $2/ TON.
PLEASE OBEY ALL TRAFFIC SIGNS WITHIN THE LANDFILL.

AFETY MEMOS:

Hard hats MUST be worn.
High Visibility vests MUST be worn.
Passengers MUST remain in vehicle at all times.

SIGNATURE

Please print or type
(Form designed for use on elite (12 pitch typewriter)

ALLIED WASTE INDUSTRIES, INC.

2524886

NON-HAZARDOUS WASTE MANIFEST

1. Generator's US EPA ID No.

Manifest Document No.

2. Page 1 of

148268

GENERATOR

3. Generator's Name and Mailing Address

Charlotte Pipe & Foundry
1335 S. Clarkson St.
Charlotte, NC 28203

4. Generator's Phone (704) 348-5408

Truck No. Acct#92834 Charlotte Pipe

5. Transporter 1 Company Name: Tri State

6. US EPA ID Number

A. Transporter's Phone

7. Transporter 2 Company Name

8. US EPA ID Number

B. Transporter's Phone

9. Designated Facility Name and Site Address

CMS Landfill
5105 Morehead Rd.
Concord, NC 28027

10. US EPA ID Number

C. Facility's Phone (704) 782-2004

11. Waste Shipping Name and Description	12. Containers No	Type	13. Total Quantity	14. Unit Wt/Vol
a. Petroleum Contaminated Soil			47540	Lbs.
b.			23.77	Tons
c.				
d.				

D. Additional Descriptions for Materials Listed Above

E. Handling Codes for Wastes Listed Above: F31-Y8-7166

15. Special Handling Instructions and Additional Information

TRANSPORTER

16. **GENERATOR'S CERTIFICATION:** I certify the materials described above on this manifest are not subject to federal regulations for reporting proper disposal of Hazardous Waste.

Printed / Typed Name: Charlotte Pipe & Foundry — Signature: Doug R Whitley — Month 7 Day 28 Year 08

17. Transporter 1 Acknowledgement of Receipt of Materials

Printed / Typed Name: Tri State — Signature: [illegible] — Month 7 Day 28 Year 08

18. Transporter 2 Acknowledgement of Receipt of Materials

Printed / Typed Name — Signature — Month — Day — Year

FACILITY

19. Discrepancy Indication Space

20. Facility Owner or Operator: Cerification of receipt of waste materials covered by this manifest except as noted in item 19.

CMS Landfill

Printed / Type Name: Susan [illegible] — Signature: [illegible] — Month 7 Day 28 Year 08

GENERATOR'S COPY

AWI Form # 121

BFI/CMS LANDFILL
5105 MOREHEAD RD.,
CONCORD,NC 28027

092834
CHARLOTTE PIPE & FOUNDRY
1335 CLARKSON ST.
CHARLOTTE, NC 28208

Contract: #F31-Y8-7166

SITE	TICKET	GRID
Y6	252488	

WEIGHMASTER: SM00055 SUSAN M

DATE IN	TIME IN
28 July 2008	7:55 am

DATE OUT	TIME OUT
28 July 2008	7:55 am

VEHICLE	ROLL OFF
TS1	

REFERENCE	ORIGIN
	MECKLENBURG

00 Gross Weight 77,600.00 lb
Stored Tare Weight 30,060.00 lb
Net Weight 47,540.00 lb 23.77 TN

Inbound - SCALE TICKET

QTY.	UNIT	DESCRIPTION	RATE	EXTENSION	TAX	TOTAL
23.77	TN	SW-CONT SOIL				
1.00	LD	ENVIRONMENTAL FEE				
1.00	LD	FUEL RECOVERY FEE				

Manifest:148268

THINK CHOOSE SAFETY LIVE

It's the Right Thing!

EFFECTIVE JULY 1, 2008 THE GATE RATE WILL INCREASE BY $27 TON.
PLEASE OBEY ALL TRAFFIC SIGNS WITHIN THE LANDFILL.

NET AMOUNT
TENDERED
CHANGE
CHECK NO.

AFETY MEMOS:

ard hats MUST be worn.
igh Visibility vests MUST be worn.
assengers MUST remain in vehicle at all times.

SIGNATURE

Please print or type
(Form designed for use on elite (12 pitch typewriter)

ALLIED WASTE INDUSTRIES, INC.

25 25 1B

NON-HAZARDOUS WASTE MANIFEST	1. Generator's US EPA ID No.	Manifest Document No.	2. Page 1 of	148269

GENERATOR

3. Generator's Name and Mailing Address: Charlotte Pipe & Foundry, 1335 S. Clarkson St., Charlotte, NC 28203

4. Generator's Phone (704) 348-5408

Truck No. Acct#92834 Charlotte Pipe

5. Transporter 1 Company Name: Tri State | 6. US EPA ID Number | A. Transporter's Phone

7. Transporter 2 Company Name | 8. US EPA ID Number | B. Transporter's Phone

9. Designated Facility Name and Site Address: CMS Landfill, 5105 Morehead Rd., Concord, NC 28027 | 10. US EPA ID Number | C. Facility's Phone: (704) 782-2004

11. Waste Shipping Name and Description	12. Containers No	Type	13. Total Quantity	14. Unit Wt/Vol
a. Petroleum Contaminated Soil			50360	Lbs.
b.			25 1B	Tons
c.				
d.				

D. Additional Descriptions for Materials Listed Above

E. Handling Codes for Wastes Listed Above: F31-Y8-7166

15. Special Handling Instructions and Additional Information

16. **GENERATOR'S CERTIFICATION:** I certify the materials described above on this manifest are not subject to federal regulations for reporting proper disposal of Hazardous Waste.

Printed / Typed Name: Charlotte Pipe & Foundry | Signature: [signature] | Month 7 Day 28 Year 08

TRANSPORTER

17. Transporter 1 Acknowledgement of Receipt of Materials

Printed / Typed Name: Tri State | Signature: [signature] | Month 7 Day 28 Year 08

18. Transporter 2 Acknowledgement of Receipt of Materials

Printed / Typed Name | Signature | Month | Day | Year

FACILITY

19. Discrepancy Indication Space

20. Facility Owner or Operator: Cerification of receipt of waste materials covered by this manifest except as noted in item 19.

CMS Landfill

Printed / Type Name: Stacy | Signature: [signature] | Month 7 Day 28 Year 08

TRANSPORTER

AWI Form # 121

BFI/CMS LANDFILL
5105 MOREHEAD RD.,
CONCORD,NC 28027

092834
CHARLOTTE PIPE & FOUNDRY
1335 CLARKSON ST.
CHARLOTTE, NC 28208

Contract: #F31-Y8-7166

SITE	TICKET	GRID
Y6	252548	

WEIGHMASTER: SM00094 SHARHONDA M

DATE IN	TIME IN
28 July 2008	9:35 am
DATE OUT	**TIME OUT**
28 July 2008	9:35 am

VEHICLE	ROLL OFF
TS1	

REFERENCE	ORIGIN
	MECKLENBURG

00 Gross Weight 80,420.00 lb
Stored Tare Weight 30,060.00 lb
Net Weight 50,360.00 lb 25.18 TN

Inbound - SCALE TICKET

QTY.	UNIT	DESCRIPTION	RATE	EXTENSION	TAX	TOTAL
25.18	TN	SW-CONT SOIL				
1.00	LD	ENVIRONMENTAL FEE				
1.00	LD	FUEL RECOVERY FEE				

Manifest#148269

NET AMOUNT
TENDERED
CHANGE
CHECK NO.

THINK SAFETY CHOOSE LIVE

EFFECTIVE JULY 1, 2008 THE GATE RATE WILL INCREASE BY $2/ TON.
PLEASE OBEY ALL TRAFFIC SIGNS WITHIN THE LANDFILL.

Weighing!

AFETY MEMOS:

ard hats MUST be worn.
igh Visibility vests MUST be worn.
assengers MUST remain in vehicle at all times.

SIGNATURE

Please print or type
(Form designed for use on elite (12 pitch typewriter)

ALLIED WASTE INDUSTRIES, INC.

25463

NON-HAZARDOUS WASTE MANIFEST

1. Generator's US EPA ID No.	Manifest Document No.	2. Page 1 of	148264

3. Generator's Name and Mailing Address Charlotte Pipe & Foundry 1335 S. Clarkson St. Charlotte, NC 28203 4. Generator's Phone (704) 348-5408	Truck No. Acct#92834 Charlotte Pipe
5. Transporter 1 Company Name: Tri State	6. US EPA ID Number A. Transporter's Phone
7. Transporter 2 Company Name	8. US EPA ID Number B. Transporter's Phone
9. Designated Facility Name and Site Address CMS Landfill 5105 Morehead Rd. Concord, NC 28027	10. US EPA ID Number C. Facility's Phone (704) 782-2004

11. Waste Shipping Name and Description	12. Containers No	Type	13. Total Quantity	14. Unit Wt/Vol
a. Petroleum Contaminated Soil			5000	Lbs.
b.			2.40	Tons
c.				
d.				

D. Additional Descriptions for Materials Listed Above	E. Handling Codes for Wastes Listed Above F31-Y8-7166

15. Special Handling Instructions and Additional Information

GENERATOR

16. **GENERATOR'S CERTIFICATION:** I certify the materials described above on this manifest are not subject to federal regulations for reporting proper disposal of Hazardous Waste.

Printed / Typed Name	Signature	Month	Day	Year
Charlotte Pipe & Foundry	[signature]	7	24	08

TRANSPORTER

17. Transporter 1 Acknowledgement of Receipt of Materials

Printed / Typed Name	Signature	Month	Day	Year
Tri State	[signature]	7	24	08

18. Transporter 2 Acknowledgement of Receipt of Materials

Printed / Typed Name	Signature	Month	Day	Year

FACILITY

19. Discrepancy Indication Space

20. Facility Owner or Operator: Cerification of receipt of waste materials covered by this manifest except as noted in item 19.

CMS Landfill

Printed / Type Name	Signature	Month	Day	Year
[signature]	[signature]	7	24	08

GENERATOR'S COPY

AWI Form # 121

WFI/CMS LANDFILL
5105 MOREHEAD RD.,
CONCORD,NC 28027

092834
CHARLOTTE PIPE & FOUNDRY
1335 CLARKSON ST.
CHARLOTTE, NC 28208

Contract: #F31-Y8-7166

SITE	TICKET	GRID
Y6	251463	

WEIGHMASTER: SM00094 SHARHONDA M

DATE IN	TIME IN
24 July 2008	11:16 am

DATE OUT	TIME OUT
24 July 2008	11:16 am

VEHICLE	ROLL OFF
TS1	

REFERENCE	ORIGIN
	MECKLENBURG

01 Gross Weight 88,860.00 lb
Stored Tare Weight 30,060.00 lb
Net Weight 58,800.00 lb 29.40 TN

Inbound - SCALE TICKET

QTY.	UNIT	DESCRIPTION	RATE	EXTENSION	TAX	TOTAL
29.40	TN	SW-CONT SOIL				
1.00	LD	ENVIRONMENTAL FEE				
1.00	LD	FUEL RECOVERY FEE				

Manifest:148264

NET AMOUNT
TENDERED
CHANGE
CHECK NO.

EFFECTIVE JULY 1, 2008 THE GATE RATE WILL INCREASE BY $2/ TON.
PLEASE OBEY ALL TRAFFIC SIGNS WITHIN THE LANDFILL.

SAFETY MEMOS:
Hard hats MUST be worn.
High Visibility vests MUST be worn.
Passengers MUST remain in vehicle at all times.

SIGNATURE

THINK SAFETY CHOOSE LIVE
It's the Right Thing!

Please print or type
(Form designed for use on elite (12 pitch typewriter)

ALLIED WASTE INDUSTRIES, INC.

251377

NON-HAZARDOUS WASTE MANIFEST

1. Generator's US EPA ID No.

Manifest Document No.

2. Page 1 of

148263

3. Generator's Name and Mailing Address

Charlotte Pipe & Foundry
1335 S. Clarkson St.
Charlotte, NC 28203

4. Generator's Phone (704) 348-5408

Truck No. Acct#92834 Charlotte Pipe

5. Transporter 1 Company Name: Tri State

6. US EPA ID Number

A. Transporter's Phone

7. Transporter 2 Company Name

8. US EPA ID Number

B. Transporter's Phone

9. Designated Facility Name and Site Address

CMS Landfill
5105 Morehead Rd.
Concord, NC 28027

10. US EPA ID Number

C. Facility's Phone (704) 782-2004

11. Waste Shipping Name and Description	12. Containers No	Type	13. Total Quantity	Unit Wt/Vol
a. Petroleum Contaminated Soil			58680	Lbs.
b.			26.34	Tons
c.				
d.				

D. Additional Descriptions for Materials Listed Above

E. Handling Codes for Wastes Listed Above: F31-Y8-7166

15. Special Handling Instructions and Additional Information

GENERATOR

16. **GENERATOR'S CERTIFICATION:** I certify the materials described above on this manifest are not subject to federal regulations for reporting proper disposal of Hazardous Waste.

Printed / Typed Name: Charlotte Pipe & Foundry — Signature: Greg Rutledge — Month 7 Day 24 Year 08

TRANSPORTER

17. Transporter 1 Acknowledgement of Receipt of Materials

Printed / Typed Name: Tri State — Signature: Darrell Richards — Month 7 Day 24 Year 08

18. Transporter 2 Acknowledgement of Receipt of Materials

Printed / Typed Name — Signature — Month — Day — Year

FACILITY

19. Discrepancy Indication Space

20. Facility Owner or Operator: Cerification of receipt of waste materials covered by this manifest except as noted in item 19.

CMS Landfill

Printed / Type Name: Shaye — Signature: Shaye — Month 7 Day 24 Year 08

GENERATOR'S COPY

AWI Form # 121

BFI/CMS LANDFILL
5105 MOREHEAD RD.,
CONCORD,NC 28027

092834
CHARLOTTE PIPE & FOUNDRY
1335 CLARKSON ST.
CHARLOTTE, NC 28208

Contract: #F31-Y8-7166

SITE	TICKET	GRID
Y6	251377	

WEIGHMASTER: SM00094 SHARHONDA M

DATE IN	TIME IN
24 July 2008	9:40 am
DATE OUT	**TIME OUT**
24 July 2008	9:40 am

VEHICLE	ROLL OFF
TS1	

REFERENCE	ORIGIN
	MECKLENBURG

Gross Weight 82,740.00 lb
Stored Tare Weight 30,060.00 lb
Net Weight 52,680.00 lb 26.34 TN

Inbound - SCALE TICKET

QTY.	UNIT	DESCRIPTION	RATE	EXTENSION	TAX	TOTAL
26.34	TN	SW-CONT SOIL				
1.00	LD	ENVIRONMENTAL FEE				
1.00	LD	FUEL RECOVERY FEE				

Manifest:148263

NET AMOUNT
TENDERED
CHANGE
CHECK NO.

THINK SAFETY LIVE CHOOSE

EFFECTIVE JULY 1, 2008 THE GATE RATE WILL INCREASE BY $2/ TON.
PLEASE OBEY ALL TRAFFIC SIGNS WITHIN THE LANDFILL.

Have a Safe Day!

SAFETY MEMOS:

Hard hats MUST be worn.
High Visibility vests MUST be worn.
Passengers MUST remain in vehicle at all times.

SIGNATURE

Please print or type
(Form designed for use on elite (12 pitch typewriter)

ALLIED WASTE INDUSTRIES, INC.

2515556

NON-HAZARDOUS WASTE MANIFEST	1. Generator's US EPA ID No.	Manifest Document No.	2. Page 1 of	148265

GENERATOR

3. Generator's Name and Mailing Address: Charlotte Pipe & Foundry, 1335 S. Clarkson St, Charlotte, NC 28203

Truck No. Acct#92834 Charlotte Pipe

4. Generator's Phone (704) 348-5408

5. Transporter 1 Company Name: Tri State | 6. US EPA ID Number | A. Transporter's Phone

7. Transporter 2 Company Name | 8. US EPA ID Number | B. Transporter's Phone

9. Designated Facility Name and Site Address: CMS Landfill, 5105 Morehead Rd., Concord, NC 28027 | 10. US EPA ID Number | C. Facility's Phone: (704) 782-2004

11. Waste Shipping Name and Description	12. Containers No	Type	13. Total Quantity	14. Unit Wt/Vol
a. Petroleum Contaminated Soil			56220	Lbs.
b.			28.11	Tons
c.				
d.				

D. Additional Descriptions for Materials Listed Above

E. Handling Codes for Wastes Listed Above: F31-Y8-7166

15. Special Handling Instructions and Additional Information

TRANSPORTER

16. **GENERATOR'S CERTIFICATION:** I certify the materials described above on this manifest are not subject to federal regulations for reporting proper disposal of Hazardous Waste.

Printed / Typed Name: Charlotte Pipe & Foundry | Signature: Doug R Nettles | Month 7 | Day 24 | Year 08

17. Transporter 1 Acknowledgement of Receipt of Materials

Printed / Typed Name: Tri State | Signature: [illegible] | Month 7 | Day 24 | Year 08

18. Transporter 2 Acknowledgement of Receipt of Materials

Printed / Typed Name | Signature | Month | Day | Year

FACILITY

19. Discrepancy Indication Space

20. Facility Owner or Operator: Cerification of receipt of waste materials covered by this manifest except as noted in item 19.

CMS Landfill

Printed / Type Name: Susan M | Signature: [illegible] | Month 7 | Day 24 | Year 08

GENERATOR'S COPY

AWI Form # 121

BFI/CMS LANDFILL
5105 MOREHEAD RD.,
CONCORD,NC 28027

072834
CHARLOTTE PIPE & FOUNDRY
1335 CLARKSON ST.
CHARLOTTE, NC 28208

Contract: #F31-Y6-7166

SITE	TICKET	GRID
Y6	251556	
WEIGHMASTER: SM00055 SUSAN M		
DATE IN: 24 July 2008	TIME IN: 12:46 pm	
DATE OUT: 24 July 2008	TIME OUT: 12:46 pm	
VEHICLE: TS1	ROLL OFF	
REFERENCE	ORIGIN: MECKLENBURG	

00 Gross Weight 86,280.00 lb
Stored Tare Weight 30,060.00 lb
Net Weight 56,220.00 lb 28.11 TN

Inbound - SCALE TICKET

QTY.	UNIT	DESCRIPTION	RATE	EXTENSION	TAX	TOTAL
28.11	TN	SW-DONT SOIL				
1.00	LD	ENVIRONMENTAL FEE				
1.00	LD	FUEL RECOVERY FEE				

Manifest:148265

THINK SAFETY CHOOSE LIVE

It's the Right Thing!

EFFECTIVE JULY 1, 2008 THE ~~GATE~~ RATE WILL INCREASE BY $27 TON.
PLEASE OBEY ALL TRAFFIC SIGNS WITHIN THE LANDFILL.

NET AMOUNT
TENDERED
CHANGE
CHECK NO.

SAFETY MEMOS:

- Hard hats MUST be worn.
- High Visibility vests MUST be worn.
- Passengers MUST remain in vehicle at all times.

SIGNATURE

APPENDIX III
CHAIN-OF-CUSTODY RECORDS

Pace Analytical®
www.pacelabs.com

CHAIN-OF-CUSTODY / Analytical Request Document

The Chain-of-Custody is a LEGAL DOCUMENT. All relevant fields must be completed accurately.

WPC4408.00071

Page: 1 of 1

1178541

Section A Required Client Information:

Company: WPC
Address: 2401 NEVADA BLVD
CHARLOTTE, NC 28273
Email To: mfox@wpceng.com
Phone: 704 927 4000 Fax: 704 927 4001
Requested Due Date/TAT:

Section B Required Project Information:

Report To: MARK FOX, WPC
Copy To:
Purchase Order No.:
Project Name: CP&F UST CLOSURE
Project Number: WPC4408.00071

Section C Invoice Information:

Attention: DAVID WAGGONER
Company Name: CP&F
Address: 1335 S. CLARKSON ST.
Pace Quote Reference:
Pace Project Manager:
Pace Profile #:

REGULATORY AGENCY

☐ NPDES ☐ GROUND WATER ☐ DRINKING WATER
☒ UST ☐ RCRA ☐ OTHER

Site Location STATE: NC

Section D Required Client Information

SAMPLE ID (A-Z, 0-9 / ,-) Sample IDs MUST BE UNIQUE

Matrix Codes (MATRIX / CODE): Drinking Water DW; Water WT; Waste Water WW; Product P; Soil/Solid SL; Oil OL; Wipe WP; Air AR; Tissue TS; Other OT

Requested Analysis Filtered (Y/N): Y/N

ITEM #	SAMPLE ID	MATRIX CODE (see valid codes to left)	SAMPLE TYPE (G=GRAB C=COMP)	COMPOSITE START DATE	COMPOSITE START TIME	COMPOSITE END/GRAB DATE	COMPOSITE END/GRAB TIME	SAMPLE TEMP AT COLLECTION	# OF CONTAINERS	Unpreserved	H_2SO_4	HNO_3	HCl	NaOH	$Na_2S_2O_3$	Methanol	Other	Analysis Test: TPH GRO	TPH DRO	Residual Chlorine (Y/N)	Pace Project No./ Lab I.D.
1	UST-1	SL	G	4/16/08		4/16/08	0930		4	2						2		X	X		
2	UST-2	SL	G	4/16/08		4/16/08	0945		4	2						2		X	X		
3																					
4																					
5																					
6																					
7																					
8																					
9																					
10																					
11																					
12																					

ADDITIONAL COMMENTS	RELINQUISHED BY / AFFILIATION	DATE	TIME	ACCEPTED BY / AFFILIATION	DATE	TIME
	Mark Fox WPC	4/16/08	1035	[signature]	04/16/08	1035

SAMPLE CONDITIONS: Temp in °C | Received on Ice (Y/N) | Custody Sealed Cooler (Y/N) | Samples Intact (Y/N)

SAMPLER NAME AND SIGNATURE
PRINT Name of SAMPLER: MARK FOX
SIGNATURE of SAMPLER: Mark Fox
DATE Signed (MM/DD/YY): 04/16/08

2

*Important Note: By signing this form you are accepting Pace's NET 30 day payment terms and agreeing to late charges of 1.5% per month for any invoices not paid within 30 days.

F-ALL-Q-020rev.07, 15-May-2007

Pace Analytical®
www.pacelabs.com

CHAIN-OF-CUSTODY / Analytical Request Document

The Chain-of-Custody is a LEGAL DOCUMENT. All relevant fields must be completed accurately.

WPC4408.00071

Page: of

1178231

Section A Required Client Information:

Company: WPL
Address: 2401 NEVADA BLVD
CHARLOTTE NC 28273-6423
Email To: mfox@wpceng.com
Phone: 704-927-4000 Fax: 704-927-4001
Requested Due Date/TAT:

Section B Required Project Information:

Report To: MARK FOX
Copy To:
Purchase Order No.:
Project Name: CHARLOTTE PIPE & FOUNDRY UST CLOSURE
Project Number: WPC4408.00071

Section C Invoice Information:

Attention:
Company Name:
Address:
Pace Quote Reference:
Pace Project Manager:
Pace Profile #:

REGULATORY AGENCY

☐ NPDES ☐ GROUND WATER ☐ DRINKING WATER
☐ UST ☐ RCRA ☐ OTHER

Site Location STATE: N.C.

Section D Required Client Information

Matrix Codes MATRIX / CODE

Drinking Water	DW
Water	WT
Waste Water	WW
Product	P
Soil/Solid	SL
Oil	OL
Wipe	WP
Air	AR
Tissue	TS
Other	OT

SAMPLE ID (A-Z, 0-9 / ,-) Sample IDs MUST BE UNIQUE

Requested Analysis Filtered (Y/N)

ITEM #	SAMPLE ID	MATRIX CODE (see valid codes to left)	SAMPLE TYPE (G=GRAB C=COMP)	COLLECTED COMPOSITE START DATE	COLLECTED COMPOSITE START TIME	COLLECTED COMPOSITE END/GRAB DATE	COLLECTED COMPOSITE END/GRAB TIME	SAMPLE TEMP AT COLLECTION	# OF CONTAINERS	Preservatives: Unpreserved	H_2SO_4	HNO_3	HCl	NaOH	$Na_2S_2O_3$	Methanol	Other	Analysis Test Y/N	TPH-GRO	TPH-DRO	Residual Chlorine (Y/N)	Pace Project No./ Lab I.D.
1	UST-1A	SL	G	4/18/08	1012				4	2						2			Y	Y		
2	UST-2A	SL	G	4/18/08	1035				4	2						2			Y	Y		
3																						
4																						
5																						
6																						
7																						
8																						
9																						
10																						
11																						
12																						

ADDITIONAL COMMENTS	RELINQUISHED BY / AFFILIATION	DATE	TIME	ACCEPTED BY / AFFILIATION	DATE	TIME	SAMPLE CONDITIONS
	[signature]	4/18/08	11:45	[signature]	04/18/08	11:45	

SAMPLER NAME AND SIGNATURE

PRINT Name of SAMPLER: BEN SWIFT

SIGNATURE of SAMPLER: [signature]

DATE Signed (MM/DD/YY): 4/18/08

Temp in °C | Received on Ice (Y/N) | Custody Sealed Cooler (Y/N) | Samples Intact (Y/N)

2

*Important Note: By signing this form you are accepting Pace's NET 30 day payment terms and agreeing to late charges of 1.5% per month for any invoices not paid within 30 days.

F-ALL-Q-020rev.07, 15-May-2007

Pace Analytical®
www.pacelabs.com

CHAIN-OF-CUSTODY / Analytical Request Document

The Chain-of-Custody is a LEGAL DOCUMENT. All relevant fields must be completed accurately.

Page: 1 of 1

1171199

Section A Required Client Information:

Company: WPC
Address: 2401 NEVADA BLVD
CHARLOTTE N.C. 28273
Email To: mfox@wpleng.com
Phone: 704-927-4000 Fax: 704-927-4001
Requested Due Date/TAT: 7 DAY TAT

Section B Required Project Information:

Report To: MARK FOX
Copy To:
Purchase Order No.:
Project Name: CHARLOTTE PIPE & FOUNDRY / UST
Project Number: WPL4408.00071

Section C Invoice Information:

Attention: DAVID NAGGONER
Company Name: CHARLOTTE PIPE AND FOUNDRY
Address:
Pace Quote Reference:
Pace Project Manager:
Pace Profile #: 1393-1

REGULATORY AGENCY: ☐ NPDES ☐ GROUND WATER ☐ DRINKING WATER ☒ UST ☐ RCRA ☐ OTHER ____

Site Location STATE: N.C.

Requested Analysis Filtered (Y/N)

Section D Required Client Information

Matrix Codes MATRIX / CODE: Drinking Water DW; Water WT; Waste Water WW; Product P; Soil/Solid SL; Oil OL; Wipe WP; Air AR; Tissue TS; Other OT

ITEM #	SAMPLE ID (A-Z, 0-9 / ,-) Sample IDs MUST BE UNIQUE	MATRIX CODE (see valid codes to left)	SAMPLE TYPE (G=GRAB C=COMP)	COLLECTED COMPOSITE START DATE	COLLECTED COMPOSITE START TIME	COLLECTED COMPOSITE END/GRAB DATE	COLLECTED COMPOSITE END/GRAB TIME	SAMPLE TEMP AT COLLECTION	# OF CONTAINERS	Unpreserved	H_2SO_4	HNO_3	HCl	NaOH	$Na_2S_2O_3$	Methanol	Other	Analysis Test	DRO NWF	NWF	GRO	BTEX NWF	VOC	SVOC	VPH	EPH	Residual Chlorine (Y/N)	Pace Project No./ Lab I.D. 92207162
1	SS-E. WALL	SL	G	6/3/08	1450				9	4						5			X	X	X	X	X	X	X			92207162001
2	SS-S. WALL	SL	G	6/3/08	1531				9	4						5			X	X	X	X	X	X	X			002
3	SS-~~BOTTOM~~ NWF BASE*	SL	G	6/3/08	1520				9	4						5			X	X	X	X	X	X	X			003
4	SS-W. WALL	SL	G	6/3/08	1505				9	4						5			X	X	X	X	X	X	X			004
5	SS-N. WALL	SL	G	6/3/08	1555				9	4						5			X	X	X	X	X	X	X			005
6																												
7																												
8																												
9																												
10																												
11																												
12																												

ADDITIONAL COMMENTS	RELINQUISHED BY / AFFILIATION	DATE	TIME	ACCEPTED BY / AFFILIATION	DATE	TIME	SAMPLE CONDITIONS			
	BEN SWIFT / WPC	6/4/08	14:17	R. Amdle / PACE	6/4/8	14:17				
	[illegible] / PACE	6/4/8	15:35	[illegible]	6/4/08	15:35	6.0	yes	no	yes

ORIGINAL

SAMPLER NAME AND SIGNATURE
PRINT Name of SAMPLER: BEN SWIFT
SIGNATURE of SAMPLER: [signature]
DATE Signed (MM/DD/YY): 6/4/08

Temp in °C | Received on Ice (Y/N) | Custody Sealed Cooler (Y/N) | Samples Intact (Y/N)

*Important Note: By signing this form you are accepting Pace's NET 30 day payment terms and agreeing to late charges of 1.5% per month for any invoices not paid within 30 days.

F-ALL-Q-020rev.07, 15-May-2007

APPENDIX IV
LABORATORY ANALYTICAL REPORTS

Pace Analytical®
www.pacelabs.com

Pace Analytical S[illegible]s, Inc.
2225 Riverside Dr.
Asheville, NC 28804
(828)254-7176

Pace Analytical Services, Inc.
9800 Kincey Ave. Suite 100
Huntersville, NC 28078
(704)875-9092

[redacted]

April 23, 2008

Mark Fox
WPC Charlotte
2401 Nevada Boulevard
Charlotte, NC 28273

RE: Project: CP&F UST CLOSURE
Pace Project No.: 9217425

Dear Mark Fox:
Enclosed are the analytical results for sample(s) received by the laboratory on April 16, 2008. The results relate only to the samples included in this report. Results reported herein conform to the most current NELAC standards, where applicable, unless otherwise narrated in the body of the report.

Inorganic Wet Chemistry and Metals analyses were performed at our Pace Asheville laboratory and Organic testing was performed at our Pace Huntersville laboratory unless otherwise footnoted. All Microbiological analyses were performed at the laboratory where the samples were received.

If you have any questions concerning this report, please feel free to contact me.

Sincerely,

Mike Brooks

mike.brooks@pacelabs.com
Project Manager

Enclosures

This report shall not be reproduced, except in full,
without the written consent of Pace Analytical Services, Inc..

Pace Analytical®
www.pacelabs.com

Pace Analytical S[illegible]s, Inc.
2225 Riverside Dr.
Asheville, NC 28804
(828)254-7176

Pace Analytical Services, Inc.
9800 Kincey Ave. Suite 100
Huntersville, NC 28078
(704)875-9092

CERTIFICATIONS

Project: CP&F UST CLOSURE
Pace Project No.: 9217425

Charlotte Certification IDs

Florida/NELAP Certification Number: E87627
Kansas Certification Number: E-10364
Louisiana/LELAP Certification Number: 04034
North Carolina Drinking Water Certification Number: 37706
North Carolina Wastewater Certification Number: 12
North Carolina Field Services Certification Number: 5342
South Carolina Certification Number: 990060001
South Carolina Bioassay Certification Number: 990060003
Tennessee Certification Number: 04010
Virginia Certification Number: 00213

Asheville Certification IDs

Florida/NELAP Certification Number: E87648
Louisiana/LELAP Certification Number: 03095
New Jersey Certification Number: NC011
North Carolina Drinking Water Certification Number: 37712
North Carolina Wastewater Certification Number: 40
North Carolina Bioassay Certification Number: 9
Pennsylvania Certification Number: 68-03578
South Carolina Certification Number: 99030001
South Carolina Bioassay Certification Number: 99030002
Tennessee Certification Number: 2980
Virginia Certification Number: 00072

Eden Certification IDs

North Carolina Drinking Water Certification Number: 37738
Virginia Drinking Water Certification Number: 00424
North Carolina Wastewater Certification Number: 633

This report shall not be reproduced, except in full,
without the written consent of Pace Analytical Services, Inc..

Pace Analytical®
www.pacelabs.com

Pace Analytical S____es, Inc.
2225 Riverside Dr.
Asheville, NC 28804
(828)254-7176

Pace Analytical Services, Inc.
9800 Kincey Ave. Suite 100
Huntersville, NC 28078
(704)875-9092

ANALYTICAL RESULTS

Project: CP&F UST CLOSURE
Pace Project No.: 9217425

Sample: UST-1 **Lab ID: 9217425001** Collected: 04/16/08 09:30 Received: 04/16/08 10:35 Matrix: Solid

Results reported on a "dry-weight" basis

Parameters	Results	Units	Report Limit	DF	Prepared	Analyzed	CAS No.	Qual
8015 GCS THC-Diesel	Analytical Method: EPA 8015 Modified		Preparation Method: EPA 3546					
Diesel Components	**16700**	mg/kg	608	100	04/17/08 20:52	04/22/08 11:45	68334-30-5	
n-Pentacosane (S)	0	%	50-135	100	04/17/08 20:52	04/22/08 11:45	629-99-2	S4
Gasoline Range Organics	Analytical Method: EPA 8015 Modified		Preparation Method: EPA 5035A/5030B					
Gasoline Range Organics	**83.3**	mg/kg	7.0	1	04/17/08 11:06	04/18/08 16:29	8006-61-9	
4-Bromofluorobenzene (S)	265	%	50-135	1	04/17/08 11:06	04/18/08 16:29	460-00-4	S1
Percent Moisture	Analytical Method: ASTM D2974-87							
Percent Moisture	**17.7**	%	0.10	1		04/17/08 08:35		

This report shall not be reproduced, except in full,
without the written consent of Pace Analytical Services, Inc..

ACCREDITED IN ACCORDANCE WITH nelac

Pace Analytical
www.pacelabs.com

Pace Analytical S[illegible]es, Inc.
2225 Riverside Dr.
Asheville, NC 28804
(828)254-7176

Pace Analytical Services, Inc.
9800 Kincey Ave. Suite 100
Huntersville, NC 28078
(704)875-9092

ANALYTICAL RESULTS

Project: CP&F UST CLOSURE
Pace Project No.: 9217425

Sample: UST-2 **Lab ID: 9217425002** Collected: 04/16/08 09:45 Received: 04/16/08 10:35 Matrix: Solid

Results reported on a "dry-weight" basis

Parameters	Results	Units	Report Limit	DF	Prepared	Analyzed	CAS No.	Qual
8015 GCS THC-Diesel	Analytical Method: EPA 8015 Modified Preparation Method: EPA 3546							
Diesel Components	**15000**	mg/kg	616	100	04/17/08 20:52	04/22/08 12:13	68334-30-5	
n-Pentacosane (S)	0	%	50-135	100	04/17/08 20:52	04/22/08 12:13	629-99-2	S4
Gasoline Range Organics	Analytical Method: EPA 8015 Modified Preparation Method: EPA 5035A/5030B							
Gasoline Range Organics	**58.7**	mg/kg	6.4	1	04/17/08 11:06	04/17/08 21:53	8006-61-9	
4-Bromofluorobenzene (S)	203	%	50-135	1	04/17/08 11:06	04/17/08 21:53	460-00-4	1g
Percent Moisture	Analytical Method: ASTM D2974-87							
Percent Moisture	**18.8**	%	0.10	1		04/17/08 08:35		

This report shall not be reproduced, except in full,
without the written consent of Pace Analytical Services, Inc..

ACCREDITED IN ACCORDANCE WITH nelac

Pace Analytical®
www.pacelabs.com

Pace Analytical S[illegible]s, Inc.
2225 Riverside Dr.
Asheville, NC 28804
(828)254-7176

Pace Analytical Services, Inc.
9800 Kincey Ave. Suite 100
Huntersville, NC 28078
(704)875-9092

QUALITY CONTROL DATA

Project: CP&F UST CLOSURE
Pace Project No.: 9217425

QC Batch: PMST/1594
QC Batch Method: ASTM D2974-87
Analysis Method: ASTM D2974-87
Analysis Description: Dry Weight/Percent Moisture
Associated Lab Samples: 9217425001, 9217425002

SAMPLE DUPLICATE: 102373

Parameter	Units	9217449009 Result	Dup Result	RPD	Qualifiers
Percent Moisture	%	18.1	19.3	7	

This report shall not be reproduced, except in full,
without the written consent of Pace Analytical Services, Inc..

ACCREDITED IN ACCORDANCE WITH nelac

Pace Analytical®
www.pacelabs.com

Pace Analytical S[illegible]s, Inc.
2225 Riverside Dr.
Asheville, NC 28804
(828)254-7176

Pace Analytical Services, Inc.
9800 Kincey Ave. Suite 100
Huntersville, NC 28078
(704)875-9092

QUALITY CONTROL DATA

Project: CP&F UST CLOSURE
Pace Project No.: 9217425

QC Batch: OEXT/2939 — Analysis Method: EPA 8015 Modified
QC Batch Method: EPA 3546 — Analysis Description: 8015 Solid GCSV
Associated Lab Samples: 9217425001, 9217425002

METHOD BLANK: 102547
Associated Lab Samples: 9217425001, 9217425002

Parameter	Units	Blank Result	Reporting Limit	Qualifiers
Diesel Components	mg/kg	ND	5.0	
n-Pentacosane (S)	%	79	50-135	

LABORATORY CONTROL SAMPLE: 102548

Parameter	Units	Spike Conc.	LCS Result	LCS % Rec	% Rec Limits	Qualifiers
Diesel Components	mg/kg	167	153	92	50-114	
n-Pentacosane (S)	%			99	50-135	

MATRIX SPIKE & MATRIX SPIKE DUPLICATE: 102549 102550

Parameter	Units	9217521004 Result	MS Spike Conc.	MSD Spike Conc.	MS Result	MSD Result	MS % Rec	MSD % Rec	% Rec Limits	RPD	Qual
Diesel Components	mg/kg	832	197	197	ND	ND	-423	-423	50-107		P6
n-Pentacosane (S)	%						0	0	50-135		S4

This report shall not be reproduced, except in full,
without the written consent of Pace Analytical Services, Inc..

ACCREDITED IN ACCORDANCE WITH nelac

Pace Analytical
www.pacelabs.com

Pace Analytical S[illegible]s, Inc.
2225 Riverside Dr.
Asheville, NC 28804
(828)254-7176

Pace Analytical Services, Inc.
9800 Kincey Ave. Suite 100
Huntersville, NC 28078
(704)875-9092

QUALITY CONTROL DATA

Project: CP&F UST CLOSURE
Pace Project No.: 9217425

QC Batch: GCV/1949 — Analysis Method: EPA 8015 Modified
QC Batch Method: EPA 5035A/5030B — Analysis Description: Gasoline Range Organics
Associated Lab Samples: 9217425001, 9217425002

METHOD BLANK: 102603
Associated Lab Samples: 9217425001, 9217425002

Parameter	Units	Blank Result	Reporting Limit	Qualifiers
Gasoline Range Organics	mg/kg	ND	6.0	
4-Bromofluorobenzene (S)	%	76	50-135	

LABORATORY CONTROL SAMPLE: 102604

Parameter	Units	Spike Conc.	LCS Result	LCS % Rec	% Rec Limits	Qualifiers
Gasoline Range Organics	mg/kg	25	26.0	104	70-150	
4-Bromofluorobenzene (S)	%			80	50-135	

MATRIX SPIKE SAMPLE: 102605

Parameter	Units	9217292001 Result	Spike Conc.	MS Result	MS % Rec	% Rec Limits	Qualifiers
Gasoline Range Organics	mg/kg	ND	30.6	33.6	109	70-148	
4-Bromofluorobenzene (S)	%				84	50-135	

SAMPLE DUPLICATE: 102606

Parameter	Units	9217292002 Result	Dup Result	RPD	Qualifiers
Gasoline Range Organics	mg/kg	ND	ND	104	
4-Bromofluorobenzene (S)	%		76	6	

This report shall not be reproduced, except in full,
without the written consent of Pace Analytical Services, Inc..

ACCREDITED IN ACCORDANCE WITH nelac

Pace Analytical®
www.pacelabs.com

Pace Analytical S[illegible]s, Inc.
2225 Riverside Dr.
Asheville, NC 28804
(828)254-7176

Pace Analytical Services, Inc.
9800 Kincey Ave. Suite 100
Huntersville, NC 28078
(704)875-9092

QUALIFIERS

Project: CP&F UST CLOSURE
Pace Project No.: 9217425

DEFINITIONS

DF - Dilution Factor, if reported, represents the factor applied to the reported data due to changes in sample preparation, dilution of the sample aliquot, or moisture content.

ND - Not Detected at or above adjusted reporting limit.

J - Estimated concentration above the adjusted method detection limit and below the adjusted reporting limit.

MDL - Adjusted Method Detection Limit.

S - Surrogate

1,2-Diphenylhydrazine (8270 listed analyte) decomposes to Azobenzene.

Consistent with EPA guidelines, unrounded data are displayed and have been used to calculate % recovery and RPD values.

LCS(D) - Laboratory Control Sample (Duplicate)

MS(D) - Matrix Spike (Duplicate)

DUP - Sample Duplicate

RPD - Relative Percent Difference

NC - Not Calculable.

Pace Analytical is NELAP accredited. Contact your Pace PM for the current list of accredited analytes.

ANALYTE QUALIFIERS

1g	Surrogate recovery outside control limits due to matrix interferences.
P6	Matrix spike recovery was outside laboratory control limits due to a parent sample concentration notably higher than the spike level.
S1	Surrogate recovery outside laboratory control limits (confirmed by re-analysis).
S4	Surrogate recovery not evaluated against control limits due to sample dilution.

This report shall not be reproduced, except in full,
without the written consent of Pace Analytical Services, Inc..

ACCREDITED IN ACCORDANCE WITH nelac

Pace Analytical
www.pacelabs.com

Pace Analytical Services, Inc.
2225 Riverside Dr.
Asheville, NC 28804
(828)254-7176

Pace Analytical Services, Inc.
9800 Kincey Ave. Suite 100
Huntersville, NC 28078
(704)875-9092

April 25, 2008

Mark Fox
WPC Charlotte
2401 Nevada Boulevard
Charlotte, NC 28273

RE: Project: CHLT PIPE &FOUNDRY UST CLOSURE
Pace Project No.: 9217656

Dear Mark Fox:
Enclosed are the analytical results for sample(s) received by the laboratory on April 18, 2008. The results relate only to the samples included in this report. Results reported herein conform to the most current NELAC standards, where applicable, unless otherwise narrated in the body of the report.

Inorganic Wet Chemistry and Metals analyses were performed at our Pace Asheville laboratory and Organic testing was performed at our Pace Huntersville laboratory unless otherwise footnoted. All Microbiological analyses were performed at the laboratory where the samples were received.

If you have any questions concerning this report, please feel free to contact me.

Sincerely,

Mike Brooks

mike.brooks@pacelabs.com
Project Manager

Enclosures

This report shall not be reproduced, except in full,
without the written consent of Pace Analytical Services, Inc..

ACCREDITED IN ACCORDANCE WITH nelac

Pace Analytical®
www.pacelabs.com

Pace Analytical Services, Inc.
2225 Riverside Dr.
Asheville, NC 28804
(828)254-7176

Pace Analytical Services, Inc.
9800 Kincey Ave. Suite 100
Huntersville, NC 28078
(704)875-9092

CERTIFICATIONS

Project: CHLT PIPE &FOUNDRY UST CLOSURE
Pace Project No.: 9217656

Charlotte Certification IDs

Florida/NELAP Certification Number: E87627
Kansas Certification Number: E-10364
Louisiana/LELAP Certification Number: 04034
North Carolina Drinking Water Certification Number: 37706
North Carolina Wastewater Certification Number: 12
North Carolina Field Services Certification Number: 5342
South Carolina Certification Number: 990060001
South Carolina Bioassay Certification Number: 990060003
Tennessee Certification Number: 04010
Virginia Certification Number: 00213

Asheville Certification IDs

Florida/NELAP Certification Number: E87648
Louisiana/LELAP Certification Number: 03095
New Jersey Certification Number: NC011
North Carolina Drinking Water Certification Number: 37712
North Carolina Wastewater Certification Number: 40
North Carolina Bioassay Certification Number: 9
Pennsylvania Certification Number: 68-03578
South Carolina Certification Number: 99030001
South Carolina Bioassay Certification Number: 99030002
Tennessee Certification Number: 2980
Virginia Certification Number: 00072

Eden Certification IDs

North Carolina Drinking Water Certification Number: 37738
Virginia Drinking Water Certification Number: 00424
North Carolina Wastewater Certification Number: 633

This report shall not be reproduced, except in full,
without the written consent of Pace Analytical Services, Inc..

Pace Analytical®
www.pacelabs.com

Pace Analytical Services, Inc.
2225 Riverside Dr.
Asheville, NC 28804
(828)254-7176

Pace Analytical Services, Inc.
9800 Kincey Ave. Suite 100
Huntersville, NC 28078
(704)875-9092

ANALYTICAL RESULTS

Project: CHLT PIPE &FOUNDRY UST CLOSURE
Pace Project No.: 9217656

Sample: UST-1A **Lab ID: 9217656001** Collected: 04/18/08 10:12 Received: 04/18/08 11:45 Matrix: Solid

Results reported on a "dry-weight" basis

Parameters	Results	Units	Report Limit	DF	Prepared	Analyzed	CAS No.	Qual
8015 GCS THC-Diesel	Analytical Method: EPA 8015 Modified Preparation Method: EPA 3546							
Diesel Components	**29.9**	mg/kg	5.3	1	04/22/08 00:00	04/23/08 16:43	68334-30-5	
n-Pentacosane (S)	77	%	50-135	1	04/22/08 00:00	04/23/08 16:43	629-99-2	
Gasoline Range Organics	Analytical Method: EPA 8015 Modified Preparation Method: EPA 5035A/5030B							
Gasoline Range Organics	ND	mg/kg	5.4	1	04/23/08 11:19	04/23/08 16:32	8006-61-9	
4-Bromofluorobenzene (S)	86	%	50-135	1	04/23/08 11:19	04/23/08 16:32	460-00-4	
Percent Moisture	Analytical Method: ASTM D2974-87							
Percent Moisture	**6.5**	%	0.10	1		04/21/08 09:25		

This report shall not be reproduced, except in full,
without the written consent of Pace Analytical Services, Inc..

ACCREDITED IN ACCORDANCE WITH nelac

Pace Analytical®
www.pacelabs.com

Pace Analytical Services, Inc.
2225 Riverside Dr.
Asheville, NC 28804
(828)254-7176

Pace Analytical Services, Inc.
9800 Kincey Ave. Suite 100
Huntersville, NC 28078
(704)875-9092

ANALYTICAL RESULTS

Project: CHLT PIPE &FOUNDRY UST CLOSURE
Pace Project No.: 9217656

Sample: UST-2A **Lab ID: 9217656002** Collected: 04/18/08 10:35 Received: 04/18/08 11:45 Matrix: Solid

Results reported on a "dry-weight" basis

Parameters	Results	Units	Report Limit	DF	Prepared	Analyzed	CAS No.	Qual
8015 GCS THC-Diesel	Analytical Method: EPA 8015 Modified		Preparation Method: EPA 3546					
Diesel Components	**1470**	mg/kg	53.5	10	04/22/08 00:00	04/23/08 16:43	68334-30-5	
n-Pentacosane (S)	0	%	50-135	10	04/22/08 00:00	04/23/08 16:43	629-99-2	S4
Gasoline Range Organics	Analytical Method: EPA 8015 Modified		Preparation Method: EPA 5035A/5030B					
Gasoline Range Organics	ND	mg/kg	5.7	1	04/23/08 11:19	04/23/08 16:53	8006-61-9	
4-Bromofluorobenzene (S)	87	%	50-135	1	04/23/08 11:19	04/23/08 16:53	460-00-4	
Percent Moisture	Analytical Method: ASTM D2974-87							
Percent Moisture	**6.5**	%	0.10	1		04/21/08 09:25		

This report shall not be reproduced, except in full,
without the written consent of Pace Analytical Services, Inc..

ACCREDITED IN ACCORDANCE WITH nelac

Pace Analytical
www.pacelabs.com

Pace Analytical Services, Inc.
2225 Riverside Dr.
Asheville, NC 28804
(828)254-7176

Pace Analytical Services, Inc.
9800 Kincey Ave. Suite 100
Huntersville, NC 28078
(704)875-9092

QUALITY CONTROL DATA

Project: CHLT PIPE &FOUNDRY UST CLOSURE
Pace Project No.: 9217656

QC Batch: PMST/1598
QC Batch Method: ASTM D2974-87
Analysis Method: ASTM D2974-87
Analysis Description: Dry Weight/Percent Moisture
Associated Lab Samples: 9217656001, 9217656002

SAMPLE DUPLICATE: 103450

Parameter	Units	9217698001 Result	Dup Result	RPD	Qualifiers
Percent Moisture	%	21.7	20.3	7	

This report shall not be reproduced, except in full,
without the written consent of Pace Analytical Services, Inc..

ACCREDITED IN ACCORDANCE WITH nelac

Pace Analytical
www.pacelabs.com

Pace Analytical Services, Inc.
2225 Riverside Dr.
Asheville, NC 28804
(828)254-7176

Pace Analytical Services, Inc.
9800 Kincey Ave. Suite 100
Huntersville, NC 28078
(704)875-9092

QUALITY CONTROL DATA

Project: CHLT PIPE &FOUNDRY UST CLOSURE
Pace Project No.: 9217656

QC Batch: OEXT/2989 — Analysis Method: EPA 8015 Modified
QC Batch Method: EPA 3546 — Analysis Description: 8015 Solid GCSV
Associated Lab Samples: 9217656001, 9217656002

METHOD BLANK: 104448
Associated Lab Samples: 9217656001, 9217656002

Parameter	Units	Blank Result	Reporting Limit	Qualifiers
Diesel Components	mg/kg	ND	5.0	
n-Pentacosane (S)	%	90	50-135	

LABORATORY CONTROL SAMPLE: 104449

Parameter	Units	Spike Conc.	LCS Result	LCS % Rec	% Rec Limits	Qualifiers
Diesel Components	mg/kg	167	147	88	50-114	
n-Pentacosane (S)	%			93	50-135	

MATRIX SPIKE & MATRIX SPIKE DUPLICATE: 104450 104451

Parameter	Units	9217632006 Result	MS Spike Conc.	MSD Spike Conc.	MS Result	MSD Result	MS % Rec	MSD % Rec	% Rec Limits	RPD	Qual
Diesel Components	mg/kg	ND	183	183	155	185	83	99	50-107	17	
n-Pentacosane (S)	%						93	108	50-135		

This report shall not be reproduced, except in full,
without the written consent of Pace Analytical Services, Inc..

ACCREDITED IN ACCORDANCE WITH nelac

Pace Analytical
www.pacelabs.com

Pace Analytical Services, Inc.
2225 Riverside Dr.
Asheville, NC 28804
(828)254-7176

Pace Analytical Services, Inc.
9800 Kincey Ave. Suite 100
Huntersville, NC 28078
(704)875-9092

QUALITY CONTROL DATA

Project: CHLT PIPE &FOUNDRY UST CLOSURE
Pace Project No.: 9217656

QC Batch: GCV/1967 — Analysis Method: EPA 8015 Modified
QC Batch Method: EPA 5035A/5030B — Analysis Description: Gasoline Range Organics
Associated Lab Samples: 9217656001, 9217656002

METHOD BLANK: 104738
Associated Lab Samples: 9217656001, 9217656002

Parameter	Units	Blank Result	Reporting Limit	Qualifiers
Gasoline Range Organics	mg/kg	ND	6.0	
4-Bromofluorobenzene (S)	%	87	50-135	

LABORATORY CONTROL SAMPLE: 104739

Parameter	Units	Spike Conc.	LCS Result	LCS % Rec	% Rec Limits	Qualifiers
Gasoline Range Organics	mg/kg	25	26.6	107	70-150	
4-Bromofluorobenzene (S)	%			84	50-135	

MATRIX SPIKE SAMPLE: 104740

Parameter	Units	9217723015 Result	Spike Conc.	MS Result	MS % Rec	% Rec Limits	Qualifiers
Gasoline Range Organics	mg/kg	ND	26.9	29.7	109	70-148	
4-Bromofluorobenzene (S)	%				88	50-135	

SAMPLE DUPLICATE: 104741

Parameter	Units	9217723016 Result	Dup Result	RPD	Qualifiers
Gasoline Range Organics	mg/kg	ND	ND	27	
4-Bromofluorobenzene (S)	%		84	1	

This report shall not be reproduced, except in full,
without the written consent of Pace Analytical Services, Inc..

ACCREDITED IN ACCORDANCE WITH nelac

Pace Analytical
www.pacelabs.com

Pace Analytical Services, Inc.
2225 Riverside Dr.
Asheville, NC 28804
(828)254-7176

Pace Analytical Services, Inc.
9800 Kincey Ave. Suite 100
Huntersville, NC 28078
(704)875-9092

QUALIFIERS

Project: CHLT PIPE &FOUNDRY UST CLOSURE
Pace Project No.: 9217656

DEFINITIONS

DF - Dilution Factor, if reported, represents the factor applied to the reported data due to changes in sample preparation, dilution of the sample aliquot, or moisture content.

ND - Not Detected at or above adjusted reporting limit.

J - Estimated concentration above the adjusted method detection limit and below the adjusted reporting limit.

MDL - Adjusted Method Detection Limit.

S - Surrogate

1,2-Diphenylhydrazine (8270 listed analyte) decomposes to Azobenzene.

Consistent with EPA guidelines, unrounded data are displayed and have been used to calculate % recovery and RPD values.

LCS(D) - Laboratory Control Sample (Duplicate)

MS(D) - Matrix Spike (Duplicate)

DUP - Sample Duplicate

RPD - Relative Percent Difference

NC - Not Calculable.

Pace Analytical is NELAP accredited. Contact your Pace PM for the current list of accredited analytes.

ANALYTE QUALIFIERS

S4 Surrogate recovery not evaluated against control limits due to sample dilution.

This report shall not be reproduced, except in full,
without the written consent of Pace Analytical Services, Inc..

ACCREDITED IN ACCORDANCE WITH nelac

Pace Analytical®
www.pacelabs.com

Pace Analytical Services, Inc.
2225 Riverside Dr.
Asheville, NC 28804
(828)254-7176

Pace Analytical Services, Inc.
9800 Kincey Ave. Suite 100
Huntersville, NC 28078
(704)875-9092

June 17, 2008

Mr. David Waggoner
Charlotte Pipe & Foundry Company
1335 South Clarkson St
Charlotte, NC 28208

RE: Project: CHARLOTTE PIPE & FOUNDRY/UST
Pace Project No.: 9220762

Dear Mr. Waggoner:
Enclosed are the analytical results for sample(s) received by the laboratory on June 04, 2008. The results relate only to the samples included in this report. Results reported herein conform to the most current NELAC standards, where applicable, unless otherwise narrated in the body of the report.

Inorganic Wet Chemistry and Metals analyses were performed at our Pace Asheville laboratory and Organic testing was performed at our Pace Huntersville laboratory unless otherwise footnoted. All Microbiological analyses were performed at the laboratory where the samples were received.

If you have any questions concerning this report, please feel free to contact me.

Sincerely,

Brenda Pathammavong

Brenda Pathammavong

brenda.pathammavong@pacelabs.com
Project Manager

Enclosures

cc: Mr. Marc Fox, Wright Padgett Christopher

This report shall not be reproduced, except in full,
without the written consent of Pace Analytical Services, Inc..

ACCREDITED IN ACCORDANCE WITH nelac

Pace Analytical Services, Inc.
2225 Riverside Dr.
Asheville, NC 28804
(828)254-7176

Pace Analytical Services, Inc.
9800 Kincey Ave. Suite 100
Huntersville, NC 28078
(704)875-9092

CERTIFICATIONS

Project: CHARLOTTE PIPE & FOUNDRY/UST
Pace Project No.: 9220762

Charlotte Certification IDs

Florida/NELAP Certification Number: E87627
Kansas Certification Number: E-10364
Louisiana/LELAP Certification Number: 04034
North Carolina Drinking Water Certification Number: 37706
North Carolina Wastewater Certification Number: 12
North Carolina Field Services Certification Number: 5342
South Carolina Certification Number: 990060001
South Carolina Bioassay Certification Number: 990060003
Tennessee Certification Number: 04010
Virginia Certification Number: 00213

Asheville Certification IDs

Florida/NELAP Certification Number: E87648
Louisiana/LELAP Certification Number: 03095
New Jersey Certification Number: NC011
North Carolina Drinking Water Certification Number: 37712
North Carolina Wastewater Certification Number: 40
North Carolina Bioassay Certification Number: 9
Pennsylvania Certification Number: 68-03578
South Carolina Certification Number: 99030001
South Carolina Bioassay Certification Number: 99030002
Tennessee Certification Number: 2980
Virginia Certification Number: 00072

Eden Certification IDs

North Carolina Drinking Water Certification Number: 37738
Virginia Drinking Water Certification Number: 00424
North Carolina Wastewater Certification Number: 633

This report shall not be reproduced, except in full,
without the written consent of Pace Analytical Services, Inc..

Pace Analytical®
www.pacelabs.com

Pace Analytical Services, Inc.
2225 Riverside Dr.
Asheville, NC 28804
(828)254-7176

Pace Analytical Services, Inc.
9800 Kincey Ave. Suite 100
Huntersville, NC 28078
(704)875-9092

ANALYTICAL RESULTS

Project: CHARLOTTE PIPE & FOUNDRY/UST
Pace Project No.: 9220762

Sample: SS-E WALL **Lab ID: 9220762001** Collected: 06/03/08 14:50 Received: 06/04/08 15:35 Matrix: Solid

Results reported on a "dry-weight" basis

Parameters	Results	Units	Report Limit	DF	Prepared	Analyzed	CAS No.	Qual
MADEP EPH NC Soil	Analytical Method: MADEP EPH Preparation Method: MADEP EPH							
Aliphatic (C09-C18)	ND	mg/kg	11.7	1	06/12/08 00:00	06/13/08 04:50		
Aliphatic (C19-C36)	ND	mg/kg	11.7	1	06/12/08 00:00	06/13/08 04:50		
Aromatic (C11-C22)	ND	mg/kg	11.7	1	06/12/08 00:00	06/13/08 04:50		
Nonatriacontane (S)	73	%	40-140	1	06/12/08 00:00	06/13/08 04:50	7194-86-7	
o-Terphenyl (S)	68	%	40-140	1	06/12/08 00:00	06/13/08 04:50	84-15-1	
2-Fluorobiphenyl (S)	101	%	40-140	1	06/12/08 00:00	06/13/08 04:50	321-60-8	
2-Bromonaphthalene (S)	108	%	40-140	1	06/12/08 00:00	06/13/08 04:50	580-13-2	
VPH NC Soil	Analytical Method: MADEP VPH Preparation Method: MADEP VPH							
Aliphatic (C05-C08)	ND	mg/kg	9.5	1	06/06/08 10:49	06/06/08 15:48		
Aliphatic (C09-C12)	ND	mg/kg	9.5	1	06/06/08 10:49	06/06/08 15:48		
Aromatic (C09-C10)	ND	mg/kg	9.5	1	06/06/08 10:49	06/06/08 15:48		
2,5-Dibromotoluene (PID)(S)	113	%	70-130	1	06/06/08 10:49	06/06/08 15:48		
2,5-Dibromotoluene (FID)(S)	110	%	70-130	1	06/06/08 10:49	06/06/08 15:48		
8270 MSSV Microwave	Analytical Method: EPA 8270 Preparation Method: EPA 3546							
Acenaphthene	ND	ug/kg	387	1	06/12/08 00:00	06/16/08 22:22	83-32-9	
Acenaphthylene	ND	ug/kg	387	1	06/12/08 00:00	06/16/08 22:22	208-96-8	
Aniline	ND	ug/kg	387	1	06/12/08 00:00	06/16/08 22:22	62-53-3	
Anthracene	ND	ug/kg	387	1	06/12/08 00:00	06/16/08 22:22	120-12-7	
Benzo(a)anthracene	ND	ug/kg	387	1	06/12/08 00:00	06/16/08 22:22	56-55-3	
Benzo(a)pyrene	ND	ug/kg	387	1	06/12/08 00:00	06/16/08 22:22	50-32-8	
Benzo(b)fluoranthene	ND	ug/kg	387	1	06/12/08 00:00	06/16/08 22:22	205-99-2	
Benzo(g,h,i)perylene	ND	ug/kg	387	1	06/12/08 00:00	06/16/08 22:22	191-24-2	
Benzo(k)fluoranthene	ND	ug/kg	387	1	06/12/08 00:00	06/16/08 22:22	207-08-9	
Benzoic acid	ND	ug/kg	1930	1	06/12/08 00:00	06/16/08 22:22	65-85-0	
Benzyl alcohol	ND	ug/kg	774	1	06/12/08 00:00	06/16/08 22:22	100-51-6	
4-Bromophenylphenyl ether	ND	ug/kg	387	1	06/12/08 00:00	06/16/08 22:22	101-55-3	
Butylbenzylphthalate	ND	ug/kg	387	1	06/12/08 00:00	06/16/08 22:22	85-68-7	
4-Chloro-3-methylphenol	ND	ug/kg	774	1	06/12/08 00:00	06/16/08 22:22	59-50-7	
4-Chloroaniline	ND	ug/kg	1930	1	06/12/08 00:00	06/16/08 22:22	106-47-8	
bis(2-Chloroethoxy)methane	ND	ug/kg	387	1	06/12/08 00:00	06/16/08 22:22	111-91-1	
bis(2-Chloroethyl) ether	ND	ug/kg	387	1	06/12/08 00:00	06/16/08 22:22	111-44-4	
bis(2-Chloroisopropyl) ether	ND	ug/kg	387	1	06/12/08 00:00	06/16/08 22:22	108-60-1	
2-Chloronaphthalene	ND	ug/kg	387	1	06/12/08 00:00	06/16/08 22:22	91-58-7	
2-Chlorophenol	ND	ug/kg	387	1	06/12/08 00:00	06/16/08 22:22	95-57-8	
4-Chlorophenylphenyl ether	ND	ug/kg	387	1	06/12/08 00:00	06/16/08 22:22	7005-72-3	
Chrysene	ND	ug/kg	387	1	06/12/08 00:00	06/16/08 22:22	218-01-9	
Dibenz(a,h)anthracene	ND	ug/kg	387	1	06/12/08 00:00	06/16/08 22:22	53-70-3	
Dibenzofuran	ND	ug/kg	387	1	06/12/08 00:00	06/16/08 22:22	132-64-9	
1,2-Dichlorobenzene	ND	ug/kg	387	1	06/12/08 00:00	06/16/08 22:22	95-50-1	
1,3-Dichlorobenzene	ND	ug/kg	387	1	06/12/08 00:00	06/16/08 22:22	541-73-1	
1,4-Dichlorobenzene	ND	ug/kg	387	1	06/12/08 00:00	06/16/08 22:22	106-46-7	
3,3'-Dichlorobenzidine	ND	ug/kg	1930	1	06/12/08 00:00	06/16/08 22:22	91-94-1	
2,4-Dichlorophenol	ND	ug/kg	387	1	06/12/08 00:00	06/16/08 22:22	120-83-2	

This report shall not be reproduced, except in full,
without the written consent of Pace Analytical Services, Inc..

ACCREDITED IN ACCORDANCE WITH nelac

Pace Analytical®
www.pacelabs.com

Pace Analytical Services, Inc.
2225 Riverside Dr.
Asheville, NC 28804
(828)254-7176

Pace Analytical Services, Inc.
9800 Kincey Ave. Suite 100
Huntersville, NC 28078
(704)875-9092

ANALYTICAL RESULTS

Project: CHARLOTTE PIPE & FOUNDRY/UST
Pace Project No.: 9220762

Sample: SS-E WALL **Lab ID: 9220762001** Collected: 06/03/08 14:50 Received: 06/04/08 15:35 Matrix: Solid

Results reported on a "dry-weight" basis

Parameters	Results	Units	Report Limit	DF	Prepared	Analyzed	CAS No.	Qual
8270 MSSV Microwave	Analytical Method: EPA 8270 Preparation Method: EPA 3546							
Diethylphthalate	ND	ug/kg	387	1	06/12/08 00:00	06/16/08 22:22	84-66-2	
2,4-Dimethylphenol	ND	ug/kg	387	1	06/12/08 00:00	06/16/08 22:22	105-67-9	
Dimethylphthalate	ND	ug/kg	387	1	06/12/08 00:00	06/16/08 22:22	131-11-3	
Di-n-butylphthalate	ND	ug/kg	387	1	06/12/08 00:00	06/16/08 22:22	84-74-2	
4,6-Dinitro-2-methylphenol	ND	ug/kg	774	1	06/12/08 00:00	06/16/08 22:22	534-52-1	
2,4-Dinitrophenol	ND	ug/kg	1930	1	06/12/08 00:00	06/16/08 22:22	51-28-5	
2,4-Dinitrotoluene	ND	ug/kg	387	1	06/12/08 00:00	06/16/08 22:22	121-14-2	
2,6-Dinitrotoluene	ND	ug/kg	387	1	06/12/08 00:00	06/16/08 22:22	606-20-2	
Di-n-octylphthalate	ND	ug/kg	387	1	06/12/08 00:00	06/16/08 22:22	117-84-0	
1,2-Diphenylhydrazine	ND	ug/kg	387	1	06/12/08 00:00	06/16/08 22:22	122-66-7	
bis(2-Ethylhexyl)phthalate	ND	ug/kg	387	1	06/12/08 00:00	06/16/08 22:22	117-81-7	
Fluoranthene	ND	ug/kg	387	1	06/12/08 00:00	06/16/08 22:22	206-44-0	
Fluorene	ND	ug/kg	387	1	06/12/08 00:00	06/16/08 22:22	86-73-7	
Hexachloro-1,3-butadiene	ND	ug/kg	387	1	06/12/08 00:00	06/16/08 22:22	87-68-3	
Hexachlorobenzene	ND	ug/kg	387	1	06/12/08 00:00	06/16/08 22:22	118-74-1	
Hexachlorocyclopentadiene	ND	ug/kg	387	1	06/12/08 00:00	06/16/08 22:22	77-47-4	
Hexachloroethane	ND	ug/kg	387	1	06/12/08 00:00	06/16/08 22:22	67-72-1	
Indeno(1,2,3-cd)pyrene	ND	ug/kg	387	1	06/12/08 00:00	06/16/08 22:22	193-39-5	
Isophorone	ND	ug/kg	387	1	06/12/08 00:00	06/16/08 22:22	78-59-1	
1-Methylnaphthalene	ND	ug/kg	387	1	06/12/08 00:00	06/16/08 22:22	90-12-0	
2-Methylnaphthalene	ND	ug/kg	387	1	06/12/08 00:00	06/16/08 22:22	91-57-6	
2-Methylphenol(o-Cresol)	ND	ug/kg	387	1	06/12/08 00:00	06/16/08 22:22	95-48-7	
3&4-Methylphenol(m&p Cresol)	ND	ug/kg	387	1	06/12/08 00:00	06/16/08 22:22		
Naphthalene	ND	ug/kg	387	1	06/12/08 00:00	06/16/08 22:22	91-20-3	
2-Nitroaniline	ND	ug/kg	1930	1	06/12/08 00:00	06/16/08 22:22	88-74-4	
3-Nitroaniline	ND	ug/kg	1930	1	06/12/08 00:00	06/16/08 22:22	99-09-2	
4-Nitroaniline	ND	ug/kg	774	1	06/12/08 00:00	06/16/08 22:22	100-01-6	
Nitrobenzene	ND	ug/kg	387	1	06/12/08 00:00	06/16/08 22:22	98-95-3	
2-Nitrophenol	ND	ug/kg	387	1	06/12/08 00:00	06/16/08 22:22	88-75-5	
4-Nitrophenol	ND	ug/kg	1930	1	06/12/08 00:00	06/16/08 22:22	100-02-7	
N-Nitrosodimethylamine	ND	ug/kg	387	1	06/12/08 00:00	06/16/08 22:22	62-75-9	
N-Nitroso-di-n-propylamine	ND	ug/kg	387	1	06/12/08 00:00	06/16/08 22:22	621-64-7	
N-Nitrosodiphenylamine	ND	ug/kg	387	1	06/12/08 00:00	06/16/08 22:22	86-30-6	
Pentachlorophenol	ND	ug/kg	1930	1	06/12/08 00:00	06/16/08 22:22	87-86-5	
Phenanthrene	ND	ug/kg	387	1	06/12/08 00:00	06/16/08 22:22	85-01-8	
Phenol	ND	ug/kg	387	1	06/12/08 00:00	06/16/08 22:22	108-95-2	
Pyrene	ND	ug/kg	387	1	06/12/08 00:00	06/16/08 22:22	129-00-0	
1,2,4-Trichlorobenzene	ND	ug/kg	387	1	06/12/08 00:00	06/16/08 22:22	120-82-1	
2,4,5-Trichlorophenol	ND	ug/kg	387	1	06/12/08 00:00	06/16/08 22:22	95-95-4	
2,4,6-Trichlorophenol	ND	ug/kg	387	1	06/12/08 00:00	06/16/08 22:22	88-06-2	
Nitrobenzene-d5 (S)	71	%	30-150	1	06/12/08 00:00	06/16/08 22:22	4165-60-0	
2-Fluorobiphenyl (S)	72	%	30-150	1	06/12/08 00:00	06/16/08 22:22	321-60-8	
Terphenyl-d14 (S)	63	%	30-150	1	06/12/08 00:00	06/16/08 22:22	1718-51-0	
Phenol-d6 (S)	51	%	30-150	1	06/12/08 00:00	06/16/08 22:22	13127-88-3	
2-Fluorophenol (S)	47	%	30-150	1	06/12/08 00:00	06/16/08 22:22	367-12-4	
2,4,6-Tribromophenol (S)	49	%	30-150	1	06/12/08 00:00	06/16/08 22:22	118-79-6	

This report shall not be reproduced, except in full,
without the written consent of Pace Analytical Services, Inc..

ACCREDITED IN ACCORDANCE WITH nelac

Pace Analytical®
www.pacelabs.com

Pace Analytical Services, Inc.
2225 Riverside Dr.
Asheville, NC 28804
(828)254-7176

Pace Analytical Services, Inc.
9800 Kincey Ave. Suite 100
Huntersville, NC 28078
(704)875-9092

ANALYTICAL RESULTS

Project: CHARLOTTE PIPE & FOUNDRY/UST
Pace Project No.: 9220762

Sample: SS-E WALL **Lab ID: 9220762001** Collected: 06/03/08 14:50 Received: 06/04/08 15:35 Matrix: Solid

Results reported on a "dry-weight" basis

Parameters	Results	Units	Report Limit	DF	Prepared	Analyzed	CAS No.	Qual
8260/5035A Volatile Organics	Analytical Method: EPA 8260							
Acetone	ND	ug/kg	101	1		06/07/08 03:03	67-64-1	
Benzene	ND	ug/kg	5.0	1		06/07/08 03:03	71-43-2	
Bromobenzene	ND	ug/kg	5.0	1		06/07/08 03:03	108-86-1	
Bromochloromethane	ND	ug/kg	5.0	1		06/07/08 03:03	74-97-5	
Bromodichloromethane	ND	ug/kg	5.0	1		06/07/08 03:03	75-27-4	
Bromoform	ND	ug/kg	5.0	1		06/07/08 03:03	75-25-2	
Bromomethane	ND	ug/kg	10.1	1		06/07/08 03:03	74-83-9	
2-Butanone (MEK)	ND	ug/kg	101	1		06/07/08 03:03	78-93-3	
n-Butylbenzene	ND	ug/kg	5.0	1		06/07/08 03:03	104-51-8	
sec-Butylbenzene	ND	ug/kg	5.0	1		06/07/08 03:03	135-98-8	
tert-Butylbenzene	ND	ug/kg	5.0	1		06/07/08 03:03	98-06-6	
Carbon tetrachloride	ND	ug/kg	5.0	1		06/07/08 03:03	56-23-5	
Chlorobenzene	ND	ug/kg	5.0	1		06/07/08 03:03	108-90-7	
Chloroethane	ND	ug/kg	10.1	1		06/07/08 03:03	75-00-3	
Chloroform	ND	ug/kg	5.0	1		06/07/08 03:03	67-66-3	
Chloromethane	ND	ug/kg	10.1	1		06/07/08 03:03	74-87-3	
2-Chlorotoluene	ND	ug/kg	5.0	1		06/07/08 03:03	95-49-8	
4-Chlorotoluene	ND	ug/kg	5.0	1		06/07/08 03:03	106-43-4	
1,2-Dibromo-3-chloropropane	ND	ug/kg	5.0	1		06/07/08 03:03	96-12-8	
Dibromochloromethane	ND	ug/kg	5.0	1		06/07/08 03:03	124-48-1	
1,2-Dibromoethane (EDB)	ND	ug/kg	5.0	1		06/07/08 03:03	106-93-4	
Dibromomethane	ND	ug/kg	5.0	1		06/07/08 03:03	74-95-3	
1,2-Dichlorobenzene	ND	ug/kg	5.0	1		06/07/08 03:03	95-50-1	
1,3-Dichlorobenzene	ND	ug/kg	5.0	1		06/07/08 03:03	541-73-1	
1,4-Dichlorobenzene	ND	ug/kg	5.0	1		06/07/08 03:03	106-46-7	
Dichlorodifluoromethane	ND	ug/kg	10.1	1		06/07/08 03:03	75-71-8	
1,1-Dichloroethane	ND	ug/kg	5.0	1		06/07/08 03:03	75-34-3	
1,2-Dichloroethane	ND	ug/kg	5.0	1		06/07/08 03:03	107-06-2	
1,1-Dichloroethene	ND	ug/kg	5.0	1		06/07/08 03:03	75-35-4	
cis-1,2-Dichloroethene	ND	ug/kg	5.0	1		06/07/08 03:03	156-59-2	
trans-1,2-Dichloroethene	ND	ug/kg	5.0	1		06/07/08 03:03	156-60-5	
1,2-Dichloropropane	ND	ug/kg	5.0	1		06/07/08 03:03	78-87-5	
1,3-Dichloropropane	ND	ug/kg	5.0	1		06/07/08 03:03	142-28-9	
2,2-Dichloropropane	ND	ug/kg	5.0	1		06/07/08 03:03	594-20-7	
1,1-Dichloropropene	ND	ug/kg	5.0	1		06/07/08 03:03	563-58-6	
cis-1,3-Dichloropropene	ND	ug/kg	5.0	1		06/07/08 03:03	10061-01-5	
trans-1,3-Dichloropropene	ND	ug/kg	5.0	1		06/07/08 03:03	10061-02-6	
Diisopropyl ether	ND	ug/kg	5.0	1		06/07/08 03:03	108-20-3	
Ethylbenzene	ND	ug/kg	5.0	1		06/07/08 03:03	100-41-4	
Hexachloro-1,3-butadiene	ND	ug/kg	5.0	1		06/07/08 03:03	87-68-3	
2-Hexanone	ND	ug/kg	50.3	1		06/07/08 03:03	591-78-6	
Isopropylbenzene (Cumene)	ND	ug/kg	5.0	1		06/07/08 03:03	98-82-8	
p-Isopropyltoluene	ND	ug/kg	5.0	1		06/07/08 03:03	99-87-6	
Methylene Chloride	ND	ug/kg	5.0	1		06/07/08 03:03	75-09-2	
4-Methyl-2-pentanone (MIBK)	ND	ug/kg	50.3	1		06/07/08 03:03	108-10-1	
Methyl-tert-butyl ether	ND	ug/kg	5.0	1		06/07/08 03:03	1634-04-4	

This report shall not be reproduced, except in full,
without the written consent of Pace Analytical Services, Inc..

ACCREDITED IN ACCORDANCE WITH nelac

Pace Analytical
www.pacelabs.com

Pace Analytical Services, Inc.
2225 Riverside Dr.
Asheville, NC 28804
(828)254-7176

Pace Analytical Services, Inc.
9800 Kincey Ave. Suite 100
Huntersville, NC 28078
(704)875-9092

ANALYTICAL RESULTS

Project: CHARLOTTE PIPE & FOUNDRY/UST
Pace Project No.: 9220762

Sample: SS-E WALL **Lab ID: 9220762001** Collected: 06/03/08 14:50 Received: 06/04/08 15:35 Matrix: Solid

Results reported on a "dry-weight" basis

Parameters	Results	Units	Report Limit	DF	Prepared	Analyzed	CAS No.	Qual
8260/5035A Volatile Organics	Analytical Method: EPA 8260							
Naphthalene	ND	ug/kg	5.0	1		06/07/08 03:03	91-20-3	
n-Propylbenzene	ND	ug/kg	5.0	1		06/07/08 03:03	103-65-1	
Styrene	ND	ug/kg	5.0	1		06/07/08 03:03	100-42-5	
1,1,1,2-Tetrachloroethane	ND	ug/kg	5.0	1		06/07/08 03:03	630-20-6	
1,1,2,2-Tetrachloroethane	ND	ug/kg	5.0	1		06/07/08 03:03	79-34-5	
Tetrachloroethene	ND	ug/kg	5.0	1		06/07/08 03:03	127-18-4	
Toluene	ND	ug/kg	5.0	1		06/07/08 03:03	108-88-3	
1,2,3-Trichlorobenzene	ND	ug/kg	5.0	1		06/07/08 03:03	87-61-6	
1,2,4-Trichlorobenzene	ND	ug/kg	5.0	1		06/07/08 03:03	120-82-1	
1,1,1-Trichloroethane	ND	ug/kg	5.0	1		06/07/08 03:03	71-55-6	
1,1,2-Trichloroethane	ND	ug/kg	5.0	1		06/07/08 03:03	79-00-5	
Trichloroethene	ND	ug/kg	5.0	1		06/07/08 03:03	79-01-6	
Trichlorofluoromethane	ND	ug/kg	5.0	1		06/07/08 03:03	75-69-4	
1,2,3-Trichloropropane	ND	ug/kg	5.0	1		06/07/08 03:03	96-18-4	
1,2,4-Trimethylbenzene	ND	ug/kg	5.0	1		06/07/08 03:03	95-63-6	
1,3,5-Trimethylbenzene	ND	ug/kg	5.0	1		06/07/08 03:03	108-67-8	
Vinyl acetate	ND	ug/kg	50.3	1		06/07/08 03:03	108-05-4	
Vinyl chloride	ND	ug/kg	10.1	1		06/07/08 03:03	75-01-4	
Xylene (Total)	ND	ug/kg	15.1	1		06/07/08 03:03	1330-20-7	
m&p-Xylene	ND	ug/kg	10.1	1		06/07/08 03:03	1330-20-7	
o-Xylene	ND	ug/kg	5.0	1		06/07/08 03:03	95-47-6	
Dibromofluoromethane (S)	115	%	79-116	1		06/07/08 03:03	1868-53-7	
Toluene-d8 (S)	108	%	88-110	1		06/07/08 03:03	2037-26-5	
4-Bromofluorobenzene (S)	96	%	74-115	1		06/07/08 03:03	460-00-4	
1,2-Dichloroethane-d4 (S)	116	%	69-121	1		06/07/08 03:03	17060-07-0	
Percent Moisture	Analytical Method: ASTM D2974-87							
Percent Moisture	**14.7**	%	0.10	1		06/05/08 17:17		

This report shall not be reproduced, except in full,
without the written consent of Pace Analytical Services, Inc..

ACCREDITED IN ACCORDANCE WITH nelac

Pace Analytical®
www.pacelabs.com

Pace Analytical Services, Inc.
2225 Riverside Dr.
Asheville, NC 28804
(828)254-7176

Pace Analytical Services, Inc.
9800 Kincey Ave. Suite 100
Huntersville, NC 28078
(704)875-9092

ANALYTICAL RESULTS

Project: CHARLOTTE PIPE & FOUNDRY/UST
Pace Project No.: 9220762

Sample: SS-S WALL **Lab ID: 9220762002** Collected: 06/03/08 15:31 Received: 06/04/08 15:35 Matrix: Solid

Results reported on a "dry-weight" basis

Parameters	Results	Units	Report Limit	DF	Prepared	Analyzed	CAS No.	Qual
MADEP EPH NC Soil	Analytical Method: MADEP EPH Preparation Method: MADEP EPH							
Aliphatic (C09-C18)	ND	mg/kg	11.6	1	06/12/08 00:00	06/13/08 05:24		
Aliphatic (C19-C36)	ND	mg/kg	11.6	1	06/12/08 00:00	06/13/08 05:24		
Aromatic (C11-C22)	ND	mg/kg	11.6	1	06/12/08 00:00	06/13/08 05:24		
Nonatriacontane (S)	51	%	40-140	1	06/12/08 00:00	06/13/08 05:24	7194-86-7	
o-Terphenyl (S)	70	%	40-140	1	06/12/08 00:00	06/13/08 05:24	84-15-1	
2-Fluorobiphenyl (S)	120	%	40-140	1	06/12/08 00:00	06/13/08 05:24	321-60-8	
2-Bromonaphthalene (S)	135	%	40-140	1	06/12/08 00:00	06/13/08 05:24	580-13-2	
VPH NC Soil	Analytical Method: MADEP VPH Preparation Method: MADEP VPH							
Aliphatic (C05-C08)	ND	mg/kg	10.8	1	06/06/08 10:49	06/06/08 16:15		
Aliphatic (C09-C12)	ND	mg/kg	10.8	1	06/06/08 10:49	06/06/08 16:15		
Aromatic (C09-C10)	ND	mg/kg	10.8	1	06/06/08 10:49	06/06/08 16:15		
2,5-Dibromotoluene (PID)(S)	109	%	70-130	1	06/06/08 10:49	06/06/08 16:15		
2,5-Dibromotoluene (FID)(S)	107	%	70-130	1	06/06/08 10:49	06/06/08 16:15		
8270 MSSV Microwave	Analytical Method: EPA 8270 Preparation Method: EPA 3546							
Acenaphthene	ND	ug/kg	383	1	06/05/08 00:00	06/08/08 14:11	83-32-9	
Acenaphthylene	ND	ug/kg	383	1	06/05/08 00:00	06/08/08 14:11	208-96-8	
Aniline	ND	ug/kg	383	1	06/05/08 00:00	06/08/08 14:11	62-53-3	
Anthracene	ND	ug/kg	383	1	06/05/08 00:00	06/08/08 14:11	120-12-7	
Benzo(a)anthracene	ND	ug/kg	383	1	06/05/08 00:00	06/08/08 14:11	56-55-3	
Benzo(a)pyrene	ND	ug/kg	383	1	06/05/08 00:00	06/08/08 14:11	50-32-8	
Benzo(b)fluoranthene	ND	ug/kg	383	1	06/05/08 00:00	06/08/08 14:11	205-99-2	
Benzo(g,h,i)perylene	ND	ug/kg	383	1	06/05/08 00:00	06/08/08 14:11	191-24-2	
Benzo(k)fluoranthene	ND	ug/kg	383	1	06/05/08 00:00	06/08/08 14:11	207-08-9	
Benzoic acid	ND	ug/kg	1920	1	06/05/08 00:00	06/08/08 14:11	65-85-0	
Benzyl alcohol	ND	ug/kg	766	1	06/05/08 00:00	06/08/08 14:11	100-51-6	
4-Bromophenylphenyl ether	ND	ug/kg	383	1	06/05/08 00:00	06/08/08 14:11	101-55-3	
Butylbenzylphthalate	ND	ug/kg	383	1	06/05/08 00:00	06/08/08 14:11	85-68-7	
4-Chloro-3-methylphenol	ND	ug/kg	766	1	06/05/08 00:00	06/08/08 14:11	59-50-7	
4-Chloroaniline	ND	ug/kg	1920	1	06/05/08 00:00	06/08/08 14:11	106-47-8	
bis(2-Chloroethoxy)methane	ND	ug/kg	383	1	06/05/08 00:00	06/08/08 14:11	111-91-1	
bis(2-Chloroethyl) ether	ND	ug/kg	383	1	06/05/08 00:00	06/08/08 14:11	111-44-4	
bis(2-Chloroisopropyl) ether	ND	ug/kg	383	1	06/05/08 00:00	06/08/08 14:11	108-60-1	
2-Chloronaphthalene	ND	ug/kg	383	1	06/05/08 00:00	06/08/08 14:11	91-58-7	
2-Chlorophenol	ND	ug/kg	383	1	06/05/08 00:00	06/08/08 14:11	95-57-8	
4-Chlorophenylphenyl ether	ND	ug/kg	383	1	06/05/08 00:00	06/08/08 14:11	7005-72-3	
Chrysene	ND	ug/kg	383	1	06/05/08 00:00	06/08/08 14:11	218-01-9	
Dibenz(a,h)anthracene	ND	ug/kg	383	1	06/05/08 00:00	06/08/08 14:11	53-70-3	
Dibenzofuran	ND	ug/kg	383	1	06/05/08 00:00	06/08/08 14:11	132-64-9	
1,2-Dichlorobenzene	ND	ug/kg	383	1	06/05/08 00:00	06/08/08 14:11	95-50-1	
1,3-Dichlorobenzene	ND	ug/kg	383	1	06/05/08 00:00	06/08/08 14:11	541-73-1	
1,4-Dichlorobenzene	ND	ug/kg	383	1	06/05/08 00:00	06/08/08 14:11	106-46-7	
3,3'-Dichlorobenzidine	ND	ug/kg	1920	1	06/05/08 00:00	06/08/08 14:11	91-94-1	
2,4-Dichlorophenol	ND	ug/kg	383	1	06/05/08 00:00	06/08/08 14:11	120-83-2	

This report shall not be reproduced, except in full,
without the written consent of Pace Analytical Services, Inc..

ACCREDITED IN ACCORDANCE WITH nelac

Pace Analytical®
www.pacelabs.com

Pace Analytical Services, Inc.
2225 Riverside Dr.
Asheville, NC 28804
(828)254-7176

Pace Analytical Services, Inc.
9800 Kincey Ave. Suite 100
Huntersville, NC 28078
(704)875-9092

ANALYTICAL RESULTS

Project: CHARLOTTE PIPE & FOUNDRY/UST
Pace Project No.: 9220762

Sample: SS-S WALL **Lab ID: 9220762002** Collected: 06/03/08 15:31 Received: 06/04/08 15:35 Matrix: Solid

Results reported on a "dry-weight" basis

Parameters	Results	Units	Report Limit	DF	Prepared	Analyzed	CAS No.	Qual
8270 MSSV Microwave	Analytical Method: EPA 8270 Preparation Method: EPA 3546							
Diethylphthalate	ND	ug/kg	383	1	06/05/08 00:00	06/08/08 14:11	84-66-2	
2,4-Dimethylphenol	ND	ug/kg	383	1	06/05/08 00:00	06/08/08 14:11	105-67-9	
Dimethylphthalate	ND	ug/kg	383	1	06/05/08 00:00	06/08/08 14:11	131-11-3	
Di-n-butylphthalate	ND	ug/kg	383	1	06/05/08 00:00	06/08/08 14:11	84-74-2	
4,6-Dinitro-2-methylphenol	ND	ug/kg	766	1	06/05/08 00:00	06/08/08 14:11	534-52-1	
2,4-Dinitrophenol	ND	ug/kg	1920	1	06/05/08 00:00	06/08/08 14:11	51-28-5	
2,4-Dinitrotoluene	ND	ug/kg	383	1	06/05/08 00:00	06/08/08 14:11	121-14-2	
2,6-Dinitrotoluene	ND	ug/kg	383	1	06/05/08 00:00	06/08/08 14:11	606-20-2	
Di-n-octylphthalate	ND	ug/kg	383	1	06/05/08 00:00	06/08/08 14:11	117-84-0	
1,2-Diphenylhydrazine	ND	ug/kg	383	1	06/05/08 00:00	06/08/08 14:11	122-66-7	
bis(2-Ethylhexyl)phthalate	ND	ug/kg	383	1	06/05/08 00:00	06/08/08 14:11	117-81-7	
Fluoranthene	ND	ug/kg	383	1	06/05/08 00:00	06/08/08 14:11	206-44-0	
Fluorene	ND	ug/kg	383	1	06/05/08 00:00	06/08/08 14:11	86-73-7	
Hexachloro-1,3-butadiene	ND	ug/kg	383	1	06/05/08 00:00	06/08/08 14:11	87-68-3	
Hexachlorobenzene	ND	ug/kg	383	1	06/05/08 00:00	06/08/08 14:11	118-74-1	
Hexachlorocyclopentadiene	ND	ug/kg	383	1	06/05/08 00:00	06/08/08 14:11	77-47-4	
Hexachloroethane	ND	ug/kg	383	1	06/05/08 00:00	06/08/08 14:11	67-72-1	
Indeno(1,2,3-cd)pyrene	ND	ug/kg	383	1	06/05/08 00:00	06/08/08 14:11	193-39-5	
Isophorone	ND	ug/kg	383	1	06/05/08 00:00	06/08/08 14:11	78-59-1	
1-Methylnaphthalene	ND	ug/kg	383	1	06/05/08 00:00	06/08/08 14:11	90-12-0	
2-Methylnaphthalene	ND	ug/kg	383	1	06/05/08 00:00	06/08/08 14:11	91-57-6	
2-Methylphenol(o-Cresol)	ND	ug/kg	383	1	06/05/08 00:00	06/08/08 14:11	95-48-7	
3&4-Methylphenol(m&p Cresol)	ND	ug/kg	383	1	06/05/08 00:00	06/08/08 14:11		
Naphthalene	ND	ug/kg	383	1	06/05/08 00:00	06/08/08 14:11	91-20-3	
2-Nitroaniline	ND	ug/kg	1920	1	06/05/08 00:00	06/08/08 14:11	88-74-4	
3-Nitroaniline	ND	ug/kg	1920	1	06/05/08 00:00	06/08/08 14:11	99-09-2	
4-Nitroaniline	ND	ug/kg	766	1	06/05/08 00:00	06/08/08 14:11	100-01-6	
Nitrobenzene	ND	ug/kg	383	1	06/05/08 00:00	06/08/08 14:11	98-95-3	
2-Nitrophenol	ND	ug/kg	383	1	06/05/08 00:00	06/08/08 14:11	88-75-5	
4-Nitrophenol	ND	ug/kg	1920	1	06/05/08 00:00	06/08/08 14:11	100-02-7	
N-Nitrosodimethylamine	ND	ug/kg	383	1	06/05/08 00:00	06/08/08 14:11	62-75-9	
N-Nitroso-di-n-propylamine	ND	ug/kg	383	1	06/05/08 00:00	06/08/08 14:11	621-64-7	
N-Nitrosodiphenylamine	ND	ug/kg	383	1	06/05/08 00:00	06/08/08 14:11	86-30-6	
Pentachlorophenol	ND	ug/kg	1920	1	06/05/08 00:00	06/08/08 14:11	87-86-5	
Phenanthrene	ND	ug/kg	383	1	06/05/08 00:00	06/08/08 14:11	85-01-8	
Phenol	ND	ug/kg	383	1	06/05/08 00:00	06/08/08 14:11	108-95-2	
Pyrene	ND	ug/kg	383	1	06/05/08 00:00	06/08/08 14:11	129-00-0	
1,2,4-Trichlorobenzene	ND	ug/kg	383	1	06/05/08 00:00	06/08/08 14:11	120-82-1	
2,4,5-Trichlorophenol	ND	ug/kg	383	1	06/05/08 00:00	06/08/08 14:11	95-95-4	
2,4,6-Trichlorophenol	ND	ug/kg	383	1	06/05/08 00:00	06/08/08 14:11	88-06-2	
Nitrobenzene-d5 (S)	52	%	30-150	1	06/05/08 00:00	06/08/08 14:11	4165-60-0	
2-Fluorobiphenyl (S)	47	%	30-150	1	06/05/08 00:00	06/08/08 14:11	321-60-8	
Terphenyl-d14 (S)	44	%	30-150	1	06/05/08 00:00	06/08/08 14:11	1718-51-0	
Phenol-d6 (S)	35	%	30-150	1	06/05/08 00:00	06/08/08 14:11	13127-88-3	
2-Fluorophenol (S)	41	%	30-150	1	06/05/08 00:00	06/08/08 14:11	367-12-4	
2,4,6-Tribromophenol (S)	26	%	30-150	1	06/05/08 00:00	06/08/08 14:11	118-79-6	1g

This report shall not be reproduced, except in full,
without the written consent of Pace Analytical Services, Inc..

ACCREDITED IN ACCORDANCE WITH nelac

Pace Analytical®
www.pacelabs.com

Pace Analytical Services, Inc.
2225 Riverside Dr.
Asheville, NC 28804
(828)254-7176

Pace Analytical Services, Inc.
9800 Kincey Ave. Suite 100
Huntersville, NC 28078
(704)875-9092

ANALYTICAL RESULTS

Project: CHARLOTTE PIPE & FOUNDRY/UST
Pace Project No.: 9220762

Sample: SS-S WALL **Lab ID: 9220762002** Collected: 06/03/08 15:31 Received: 06/04/08 15:35 Matrix: Solid

Results reported on a "dry-weight" basis

Parameters	Results	Units	Report Limit	DF	Prepared	Analyzed	CAS No.	Qual
8260/5035A Volatile Organics	Analytical Method: EPA 8260							
Acetone	ND	ug/kg	94.9	1		06/07/08 03:22	67-64-1	
Benzene	ND	ug/kg	4.7	1		06/07/08 03:22	71-43-2	
Bromobenzene	ND	ug/kg	4.7	1		06/07/08 03:22	108-86-1	
Bromochloromethane	ND	ug/kg	4.7	1		06/07/08 03:22	74-97-5	
Bromodichloromethane	ND	ug/kg	4.7	1		06/07/08 03:22	75-27-4	
Bromoform	ND	ug/kg	4.7	1		06/07/08 03:22	75-25-2	
Bromomethane	ND	ug/kg	9.5	1		06/07/08 03:22	74-83-9	
2-Butanone (MEK)	ND	ug/kg	94.9	1		06/07/08 03:22	78-93-3	
n-Butylbenzene	ND	ug/kg	4.7	1		06/07/08 03:22	104-51-8	
sec-Butylbenzene	ND	ug/kg	4.7	1		06/07/08 03:22	135-98-8	
tert-Butylbenzene	ND	ug/kg	4.7	1		06/07/08 03:22	98-06-6	
Carbon tetrachloride	ND	ug/kg	4.7	1		06/07/08 03:22	56-23-5	
Chlorobenzene	ND	ug/kg	4.7	1		06/07/08 03:22	108-90-7	
Chloroethane	ND	ug/kg	9.5	1		06/07/08 03:22	75-00-3	
Chloroform	ND	ug/kg	4.7	1		06/07/08 03:22	67-66-3	
Chloromethane	ND	ug/kg	9.5	1		06/07/08 03:22	74-87-3	
2-Chlorotoluene	ND	ug/kg	4.7	1		06/07/08 03:22	95-49-8	
4-Chlorotoluene	ND	ug/kg	4.7	1		06/07/08 03:22	106-43-4	
1,2-Dibromo-3-chloropropane	ND	ug/kg	4.7	1		06/07/08 03:22	96-12-8	
Dibromochloromethane	ND	ug/kg	4.7	1		06/07/08 03:22	124-48-1	
1,2-Dibromoethane (EDB)	ND	ug/kg	4.7	1		06/07/08 03:22	106-93-4	
Dibromomethane	ND	ug/kg	4.7	1		06/07/08 03:22	74-95-3	
1,2-Dichlorobenzene	ND	ug/kg	4.7	1		06/07/08 03:22	95-50-1	
1,3-Dichlorobenzene	ND	ug/kg	4.7	1		06/07/08 03:22	541-73-1	
1,4-Dichlorobenzene	ND	ug/kg	4.7	1		06/07/08 03:22	106-46-7	
Dichlorodifluoromethane	ND	ug/kg	9.5	1		06/07/08 03:22	75-71-8	
1,1-Dichloroethane	ND	ug/kg	4.7	1		06/07/08 03:22	75-34-3	
1,2-Dichloroethane	ND	ug/kg	4.7	1		06/07/08 03:22	107-06-2	
1,1-Dichloroethene	ND	ug/kg	4.7	1		06/07/08 03:22	75-35-4	
cis-1,2-Dichloroethene	ND	ug/kg	4.7	1		06/07/08 03:22	156-59-2	
trans-1,2-Dichloroethene	ND	ug/kg	4.7	1		06/07/08 03:22	156-60-5	
1,2-Dichloropropane	ND	ug/kg	4.7	1		06/07/08 03:22	78-87-5	
1,3-Dichloropropane	ND	ug/kg	4.7	1		06/07/08 03:22	142-28-9	
2,2-Dichloropropane	ND	ug/kg	4.7	1		06/07/08 03:22	594-20-7	
1,1-Dichloropropene	ND	ug/kg	4.7	1		06/07/08 03:22	563-58-6	
cis-1,3-Dichloropropene	ND	ug/kg	4.7	1		06/07/08 03:22	10061-01-5	
trans-1,3-Dichloropropene	ND	ug/kg	4.7	1		06/07/08 03:22	10061-02-6	
Diisopropyl ether	ND	ug/kg	4.7	1		06/07/08 03:22	108-20-3	
Ethylbenzene	ND	ug/kg	4.7	1		06/07/08 03:22	100-41-4	
Hexachloro-1,3-butadiene	ND	ug/kg	4.7	1		06/07/08 03:22	87-68-3	
2-Hexanone	ND	ug/kg	47.4	1		06/07/08 03:22	591-78-6	
Isopropylbenzene (Cumene)	ND	ug/kg	4.7	1		06/07/08 03:22	98-82-8	
p-Isopropyltoluene	ND	ug/kg	4.7	1		06/07/08 03:22	99-87-6	
Methylene Chloride	ND	ug/kg	4.7	1		06/07/08 03:22	75-09-2	
4-Methyl-2-pentanone (MIBK)	ND	ug/kg	47.4	1		06/07/08 03:22	108-10-1	
Methyl-tert-butyl ether	ND	ug/kg	4.7	1		06/07/08 03:22	1634-04-4	

This report shall not be reproduced, except in full,
without the written consent of Pace Analytical Services, Inc..

ACCREDITED IN ACCORDANCE WITH nelac

Pace Analytical®
www.pacelabs.com

Pace Analytical Services, Inc.
2225 Riverside Dr.
Asheville, NC 28804
(828)254-7176

Pace Analytical Services, Inc.
9800 Kincey Ave. Suite 100
Huntersville, NC 28078
(704)875-9092

ANALYTICAL RESULTS

Project: CHARLOTTE PIPE & FOUNDRY/UST
Pace Project No.: 9220762

Sample: SS-S WALL **Lab ID: 9220762002** Collected: 06/03/08 15:31 Received: 06/04/08 15:35 Matrix: Solid

Results reported on a "dry-weight" basis

Parameters	Results	Units	Report Limit	DF	Prepared	Analyzed	CAS No.	Qual
8260/5035A Volatile Organics	Analytical Method: EPA 8260							
Naphthalene	ND	ug/kg	4.7	1		06/07/08 03:22	91-20-3	
n-Propylbenzene	ND	ug/kg	4.7	1		06/07/08 03:22	103-65-1	
Styrene	ND	ug/kg	4.7	1		06/07/08 03:22	100-42-5	
1,1,1,2-Tetrachloroethane	ND	ug/kg	4.7	1		06/07/08 03:22	630-20-6	
1,1,2,2-Tetrachloroethane	ND	ug/kg	4.7	1		06/07/08 03:22	79-34-5	
Tetrachloroethene	ND	ug/kg	4.7	1		06/07/08 03:22	127-18-4	
Toluene	ND	ug/kg	4.7	1		06/07/08 03:22	108-88-3	
1,2,3-Trichlorobenzene	ND	ug/kg	4.7	1		06/07/08 03:22	87-61-6	
1,2,4-Trichlorobenzene	ND	ug/kg	4.7	1		06/07/08 03:22	120-82-1	
1,1,1-Trichloroethane	ND	ug/kg	4.7	1		06/07/08 03:22	71-55-6	
1,1,2-Trichloroethane	ND	ug/kg	4.7	1		06/07/08 03:22	79-00-5	
Trichloroethene	ND	ug/kg	4.7	1		06/07/08 03:22	79-01-6	
Trichlorofluoromethane	ND	ug/kg	4.7	1		06/07/08 03:22	75-69-4	
1,2,3-Trichloropropane	ND	ug/kg	4.7	1		06/07/08 03:22	96-18-4	
1,2,4-Trimethylbenzene	ND	ug/kg	4.7	1		06/07/08 03:22	95-63-6	
1,3,5-Trimethylbenzene	ND	ug/kg	4.7	1		06/07/08 03:22	108-67-8	
Vinyl acetate	ND	ug/kg	47.4	1		06/07/08 03:22	108-05-4	
Vinyl chloride	ND	ug/kg	9.5	1		06/07/08 03:22	75-01-4	
Xylene (Total)	ND	ug/kg	14.2	1		06/07/08 03:22	1330-20-7	
m&p-Xylene	ND	ug/kg	9.5	1		06/07/08 03:22	1330-20-7	
o-Xylene	ND	ug/kg	4.7	1		06/07/08 03:22	95-47-6	
Dibromofluoromethane (S)	111	%	79-116	1		06/07/08 03:22	1868-53-7	
Toluene-d8 (S)	110	%	88-110	1		06/07/08 03:22	2037-26-5	
4-Bromofluorobenzene (S)	98	%	74-115	1		06/07/08 03:22	460-00-4	
1,2-Dichloroethane-d4 (S)	105	%	69-121	1		06/07/08 03:22	17060-07-0	
Percent Moisture	Analytical Method: ASTM D2974-87							
Percent Moisture	**13.9**	%	0.10	1		06/05/08 17:17		

This report shall not be reproduced, except in full,
without the written consent of Pace Analytical Services, Inc..

ACCREDITED IN ACCORDANCE WITH nelac

Pace Analytical®
www.pacelabs.com

Pace Analytical Services, Inc.
2225 Riverside Dr.
Asheville, NC 28804
(828)254-7176

Pace Analytical Services, Inc.
9800 Kincey Ave. Suite 100
Huntersville, NC 28078
(704)875-9092

ANALYTICAL RESULTS

Project: CHARLOTTE PIPE & FOUNDRY/UST
Pace Project No.: 9220762

Sample: SS-MRF/BASE **Lab ID: 9220762003** Collected: 06/03/08 15:20 Received: 06/04/08 15:35 Matrix: Solid

Results reported on a "dry-weight" basis

Parameters	Results	Units	Report Limit	DF	Prepared	Analyzed	CAS No.	Qual
MADEP EPH NC Soil	Analytical Method: MADEP EPH Preparation Method: MADEP EPH							
Aliphatic (C09-C18)	ND	mg/kg	10.7	1	06/12/08 00:00	06/13/08 05:58		
Aliphatic (C19-C36)	ND	mg/kg	10.7	1	06/12/08 00:00	06/13/08 05:58		
Aromatic (C11-C22)	ND	mg/kg	10.7	1	06/12/08 00:00	06/13/08 05:58		
Nonatriacontane (S)	87	%	40-140	1	06/12/08 00:00	06/13/08 05:58	7194-86-7	
o-Terphenyl (S)	100	%	40-140	1	06/12/08 00:00	06/13/08 05:58	84-15-1	
2-Fluorobiphenyl (S)	100	%	40-140	1	06/12/08 00:00	06/13/08 05:58	321-60-8	
2-Bromonaphthalene (S)	103	%	40-140	1	06/12/08 00:00	06/13/08 05:58	580-13-2	
VPH NC Soil	Analytical Method: MADEP VPH Preparation Method: MADEP VPH							
Aliphatic (C05-C08)	ND	mg/kg	10.4	1	06/06/08 10:49	06/06/08 16:41		
Aliphatic (C09-C12)	ND	mg/kg	10.4	1	06/06/08 10:49	06/06/08 16:41		
Aromatic (C09-C10)	ND	mg/kg	10.4	1	06/06/08 10:49	06/06/08 16:41		
2,5-Dibromotoluene (PID)(S)	112	%	70-130	1	06/06/08 10:49	06/06/08 16:41		
2,5-Dibromotoluene (FID)(S)	111	%	70-130	1	06/06/08 10:49	06/06/08 16:41		
8270 MSSV Microwave	Analytical Method: EPA 8270 Preparation Method: EPA 3546							
Acenaphthene	ND	ug/kg	354	1	06/05/08 00:00	06/08/08 14:37	83-32-9	
Acenaphthylene	ND	ug/kg	354	1	06/05/08 00:00	06/08/08 14:37	208-96-8	
Aniline	ND	ug/kg	354	1	06/05/08 00:00	06/08/08 14:37	62-53-3	
Anthracene	ND	ug/kg	354	1	06/05/08 00:00	06/08/08 14:37	120-12-7	
Benzo(a)anthracene	ND	ug/kg	354	1	06/05/08 00:00	06/08/08 14:37	56-55-3	
Benzo(a)pyrene	ND	ug/kg	354	1	06/05/08 00:00	06/08/08 14:37	50-32-8	
Benzo(b)fluoranthene	ND	ug/kg	354	1	06/05/08 00:00	06/08/08 14:37	205-99-2	
Benzo(g,h,i)perylene	ND	ug/kg	354	1	06/05/08 00:00	06/08/08 14:37	191-24-2	
Benzo(k)fluoranthene	ND	ug/kg	354	1	06/05/08 00:00	06/08/08 14:37	207-08-9	
Benzoic acid	ND	ug/kg	1770	1	06/05/08 00:00	06/08/08 14:37	65-85-0	
Benzyl alcohol	ND	ug/kg	709	1	06/05/08 00:00	06/08/08 14:37	100-51-6	
4-Bromophenylphenyl ether	ND	ug/kg	354	1	06/05/08 00:00	06/08/08 14:37	101-55-3	
Butylbenzylphthalate	ND	ug/kg	354	1	06/05/08 00:00	06/08/08 14:37	85-68-7	
4-Chloro-3-methylphenol	ND	ug/kg	709	1	06/05/08 00:00	06/08/08 14:37	59-50-7	
4-Chloroaniline	ND	ug/kg	1770	1	06/05/08 00:00	06/08/08 14:37	106-47-8	
bis(2-Chloroethoxy)methane	ND	ug/kg	354	1	06/05/08 00:00	06/08/08 14:37	111-91-1	
bis(2-Chloroethyl) ether	ND	ug/kg	354	1	06/05/08 00:00	06/08/08 14:37	111-44-4	
bis(2-Chloroisopropyl) ether	ND	ug/kg	354	1	06/05/08 00:00	06/08/08 14:37	108-60-1	
2-Chloronaphthalene	ND	ug/kg	354	1	06/05/08 00:00	06/08/08 14:37	91-58-7	
2-Chlorophenol	ND	ug/kg	354	1	06/05/08 00:00	06/08/08 14:37	95-57-8	
4-Chlorophenylphenyl ether	ND	ug/kg	354	1	06/05/08 00:00	06/08/08 14:37	7005-72-3	
Chrysene	ND	ug/kg	354	1	06/05/08 00:00	06/08/08 14:37	218-01-9	
Dibenz(a,h)anthracene	ND	ug/kg	354	1	06/05/08 00:00	06/08/08 14:37	53-70-3	
Dibenzofuran	ND	ug/kg	354	1	06/05/08 00:00	06/08/08 14:37	132-64-9	
1,2-Dichlorobenzene	ND	ug/kg	354	1	06/05/08 00:00	06/08/08 14:37	95-50-1	
1,3-Dichlorobenzene	ND	ug/kg	354	1	06/05/08 00:00	06/08/08 14:37	541-73-1	
1,4-Dichlorobenzene	ND	ug/kg	354	1	06/05/08 00:00	06/08/08 14:37	106-46-7	
3,3'-Dichlorobenzidine	ND	ug/kg	1770	1	06/05/08 00:00	06/08/08 14:37	91-94-1	
2,4-Dichlorophenol	ND	ug/kg	354	1	06/05/08 00:00	06/08/08 14:37	120-83-2	

This report shall not be reproduced, except in full,
without the written consent of Pace Analytical Services, Inc..

ACCREDITED IN ACCORDANCE WITH nelac

Pace Analytical®
www.pacelabs.com

Pace Analytical Services, Inc.
2225 Riverside Dr.
Asheville, NC 28804
(828)254-7176

Pace Analytical Services, Inc.
9800 Kincey Ave. Suite 100
Huntersville, NC 28078
(704)875-9092

ANALYTICAL RESULTS

Project: CHARLOTTE PIPE & FOUNDRY/UST
Pace Project No.: 9220762

Sample: SS-MRF/BASE **Lab ID: 9220762003** Collected: 06/03/08 15:20 Received: 06/04/08 15:35 Matrix: Solid

Results reported on a "dry-weight" basis

Parameters	Results	Units	Report Limit	DF	Prepared	Analyzed	CAS No.	Qual
8270 MSSV Microwave	Analytical Method: EPA 8270 Preparation Method: EPA 3546							
Diethylphthalate	ND	ug/kg	354	1	06/05/08 00:00	06/08/08 14:37	84-66-2	
2,4-Dimethylphenol	ND	ug/kg	354	1	06/05/08 00:00	06/08/08 14:37	105-67-9	
Dimethylphthalate	ND	ug/kg	354	1	06/05/08 00:00	06/08/08 14:37	131-11-3	
Di-n-butylphthalate	ND	ug/kg	354	1	06/05/08 00:00	06/08/08 14:37	84-74-2	
4,6-Dinitro-2-methylphenol	ND	ug/kg	709	1	06/05/08 00:00	06/08/08 14:37	534-52-1	
2,4-Dinitrophenol	ND	ug/kg	1770	1	06/05/08 00:00	06/08/08 14:37	51-28-5	
2,4-Dinitrotoluene	ND	ug/kg	354	1	06/05/08 00:00	06/08/08 14:37	121-14-2	
2,6-Dinitrotoluene	ND	ug/kg	354	1	06/05/08 00:00	06/08/08 14:37	606-20-2	
Di-n-octylphthalate	ND	ug/kg	354	1	06/05/08 00:00	06/08/08 14:37	117-84-0	
1,2-Diphenylhydrazine	ND	ug/kg	354	1	06/05/08 00:00	06/08/08 14:37	122-66-7	
bis(2-Ethylhexyl)phthalate	ND	ug/kg	354	1	06/05/08 00:00	06/08/08 14:37	117-81-7	
Fluoranthene	ND	ug/kg	354	1	06/05/08 00:00	06/08/08 14:37	206-44-0	
Fluorene	ND	ug/kg	354	1	06/05/08 00:00	06/08/08 14:37	86-73-7	
Hexachloro-1,3-butadiene	ND	ug/kg	354	1	06/05/08 00:00	06/08/08 14:37	87-68-3	
Hexachlorobenzene	ND	ug/kg	354	1	06/05/08 00:00	06/08/08 14:37	118-74-1	
Hexachlorocyclopentadiene	ND	ug/kg	354	1	06/05/08 00:00	06/08/08 14:37	77-47-4	
Hexachloroethane	ND	ug/kg	354	1	06/05/08 00:00	06/08/08 14:37	67-72-1	
Indeno(1,2,3-cd)pyrene	ND	ug/kg	354	1	06/05/08 00:00	06/08/08 14:37	193-39-5	
Isophorone	ND	ug/kg	354	1	06/05/08 00:00	06/08/08 14:37	78-59-1	
1-Methylnaphthalene	ND	ug/kg	354	1	06/05/08 00:00	06/08/08 14:37	90-12-0	
2-Methylnaphthalene	ND	ug/kg	354	1	06/05/08 00:00	06/08/08 14:37	91-57-6	
2-Methylphenol(o-Cresol)	ND	ug/kg	354	1	06/05/08 00:00	06/08/08 14:37	95-48-7	
3&4-Methylphenol(m&p Cresol)	ND	ug/kg	354	1	06/05/08 00:00	06/08/08 14:37		
Naphthalene	ND	ug/kg	354	1	06/05/08 00:00	06/08/08 14:37	91-20-3	
2-Nitroaniline	ND	ug/kg	1770	1	06/05/08 00:00	06/08/08 14:37	88-74-4	
3-Nitroaniline	ND	ug/kg	1770	1	06/05/08 00:00	06/08/08 14:37	99-09-2	
4-Nitroaniline	ND	ug/kg	709	1	06/05/08 00:00	06/08/08 14:37	100-01-6	
Nitrobenzene	ND	ug/kg	354	1	06/05/08 00:00	06/08/08 14:37	98-95-3	
2-Nitrophenol	ND	ug/kg	354	1	06/05/08 00:00	06/08/08 14:37	88-75-5	
4-Nitrophenol	ND	ug/kg	1770	1	06/05/08 00:00	06/08/08 14:37	100-02-7	
N-Nitrosodimethylamine	ND	ug/kg	354	1	06/05/08 00:00	06/08/08 14:37	62-75-9	
N-Nitroso-di-n-propylamine	ND	ug/kg	354	1	06/05/08 00:00	06/08/08 14:37	621-64-7	
N-Nitrosodiphenylamine	ND	ug/kg	354	1	06/05/08 00:00	06/08/08 14:37	86-30-6	
Pentachlorophenol	ND	ug/kg	1770	1	06/05/08 00:00	06/08/08 14:37	87-86-5	
Phenanthrene	ND	ug/kg	354	1	06/05/08 00:00	06/08/08 14:37	85-01-8	
Phenol	ND	ug/kg	354	1	06/05/08 00:00	06/08/08 14:37	108-95-2	
Pyrene	ND	ug/kg	354	1	06/05/08 00:00	06/08/08 14:37	129-00-0	
1,2,4-Trichlorobenzene	ND	ug/kg	354	1	06/05/08 00:00	06/08/08 14:37	120-82-1	
2,4,5-Trichlorophenol	ND	ug/kg	354	1	06/05/08 00:00	06/08/08 14:37	95-95-4	
2,4,6-Trichlorophenol	ND	ug/kg	354	1	06/05/08 00:00	06/08/08 14:37	88-06-2	
Nitrobenzene-d5 (S)	67	%	30-150	1	06/05/08 00:00	06/08/08 14:37	4165-60-0	
2-Fluorobiphenyl (S)	64	%	30-150	1	06/05/08 00:00	06/08/08 14:37	321-60-8	
Terphenyl-d14 (S)	73	%	30-150	1	06/05/08 00:00	06/08/08 14:37	1718-51-0	
Phenol-d6 (S)	63	%	30-150	1	06/05/08 00:00	06/08/08 14:37	13127-88-3	
2-Fluorophenol (S)	72	%	30-150	1	06/05/08 00:00	06/08/08 14:37	367-12-4	
2,4,6-Tribromophenol (S)	71	%	30-150	1	06/05/08 00:00	06/08/08 14:37	118-79-6	

This report shall not be reproduced, except in full,
without the written consent of Pace Analytical Services, Inc..

ACCREDITED IN ACCORDANCE WITH nelac

Pace Analytical®
www.pacelabs.com

Pace Analytical Services, Inc.
2225 Riverside Dr.
Asheville, NC 28804
(828)254-7176

Pace Analytical Services, Inc.
9800 Kincey Ave. Suite 100
Huntersville, NC 28078
(704)875-9092

ANALYTICAL RESULTS

Project: CHARLOTTE PIPE & FOUNDRY/UST
Pace Project No.: 9220762

Sample: SS-MRF/BASE **Lab ID: 9220762003** Collected: 06/03/08 15:20 Received: 06/04/08 15:35 Matrix: Solid

Results reported on a "dry-weight" basis

Parameters	Results	Units	Report Limit	DF	Prepared	Analyzed	CAS No.	Qual
8260/5035A Volatile Organics	Analytical Method: EPA 8260							
Acetone	ND	ug/kg	96.2	1		06/07/08 03:40	67-64-1	
Benzene	ND	ug/kg	4.8	1		06/07/08 03:40	71-43-2	
Bromobenzene	ND	ug/kg	4.8	1		06/07/08 03:40	108-86-1	
Bromochloromethane	ND	ug/kg	4.8	1		06/07/08 03:40	74-97-5	
Bromodichloromethane	ND	ug/kg	4.8	1		06/07/08 03:40	75-27-4	
Bromoform	ND	ug/kg	4.8	1		06/07/08 03:40	75-25-2	
Bromomethane	ND	ug/kg	9.6	1		06/07/08 03:40	74-83-9	
2-Butanone (MEK)	ND	ug/kg	96.2	1		06/07/08 03:40	78-93-3	
n-Butylbenzene	ND	ug/kg	4.8	1		06/07/08 03:40	104-51-8	
sec-Butylbenzene	ND	ug/kg	4.8	1		06/07/08 03:40	135-98-8	
tert-Butylbenzene	ND	ug/kg	4.8	1		06/07/08 03:40	98-06-6	
Carbon tetrachloride	ND	ug/kg	4.8	1		06/07/08 03:40	56-23-5	
Chlorobenzene	ND	ug/kg	4.8	1		06/07/08 03:40	108-90-7	
Chloroethane	ND	ug/kg	9.6	1		06/07/08 03:40	75-00-3	
Chloroform	ND	ug/kg	4.8	1		06/07/08 03:40	67-66-3	
Chloromethane	ND	ug/kg	9.6	1		06/07/08 03:40	74-87-3	
2-Chlorotoluene	ND	ug/kg	4.8	1		06/07/08 03:40	95-49-8	
4-Chlorotoluene	ND	ug/kg	4.8	1		06/07/08 03:40	106-43-4	
1,2-Dibromo-3-chloropropane	ND	ug/kg	4.8	1		06/07/08 03:40	96-12-8	
Dibromochloromethane	ND	ug/kg	4.8	1		06/07/08 03:40	124-48-1	
1,2-Dibromoethane (EDB)	ND	ug/kg	4.8	1		06/07/08 03:40	106-93-4	
Dibromomethane	ND	ug/kg	4.8	1		06/07/08 03:40	74-95-3	
1,2-Dichlorobenzene	ND	ug/kg	4.8	1		06/07/08 03:40	95-50-1	
1,3-Dichlorobenzene	ND	ug/kg	4.8	1		06/07/08 03:40	541-73-1	
1,4-Dichlorobenzene	ND	ug/kg	4.8	1		06/07/08 03:40	106-46-7	
Dichlorodifluoromethane	ND	ug/kg	9.6	1		06/07/08 03:40	75-71-8	
1,1-Dichloroethane	ND	ug/kg	4.8	1		06/07/08 03:40	75-34-3	
1,2-Dichloroethane	ND	ug/kg	4.8	1		06/07/08 03:40	107-06-2	
1,1-Dichloroethene	ND	ug/kg	4.8	1		06/07/08 03:40	75-35-4	
cis-1,2-Dichloroethene	ND	ug/kg	4.8	1		06/07/08 03:40	156-59-2	
trans-1,2-Dichloroethene	ND	ug/kg	4.8	1		06/07/08 03:40	156-60-5	
1,2-Dichloropropane	ND	ug/kg	4.8	1		06/07/08 03:40	78-87-5	
1,3-Dichloropropane	ND	ug/kg	4.8	1		06/07/08 03:40	142-28-9	
2,2-Dichloropropane	ND	ug/kg	4.8	1		06/07/08 03:40	594-20-7	
1,1-Dichloropropene	ND	ug/kg	4.8	1		06/07/08 03:40	563-58-6	
cis-1,3-Dichloropropene	ND	ug/kg	4.8	1		06/07/08 03:40	10061-01-5	
trans-1,3-Dichloropropene	ND	ug/kg	4.8	1		06/07/08 03:40	10061-02-6	
Diisopropyl ether	ND	ug/kg	4.8	1		06/07/08 03:40	108-20-3	
Ethylbenzene	ND	ug/kg	4.8	1		06/07/08 03:40	100-41-4	
Hexachloro-1,3-butadiene	ND	ug/kg	4.8	1		06/07/08 03:40	87-68-3	
2-Hexanone	ND	ug/kg	48.1	1		06/07/08 03:40	591-78-6	
Isopropylbenzene (Cumene)	ND	ug/kg	4.8	1		06/07/08 03:40	98-82-8	
p-Isopropyltoluene	ND	ug/kg	4.8	1		06/07/08 03:40	99-87-6	
Methylene Chloride	ND	ug/kg	4.8	1		06/07/08 03:40	75-09-2	
4-Methyl-2-pentanone (MIBK)	ND	ug/kg	48.1	1		06/07/08 03:40	108-10-1	
Methyl-tert-butyl ether	ND	ug/kg	4.8	1		06/07/08 03:40	1634-04-4	

This report shall not be reproduced, except in full,
without the written consent of Pace Analytical Services, Inc..

ACCREDITED IN ACCORDANCE WITH nelac

Pace Analytical®
www.pacelabs.com

Pace Analytical Services, Inc.
2225 Riverside Dr.
Asheville, NC 28804
(828)254-7176

Pace Analytical Services, Inc.
9800 Kincey Ave. Suite 100
Huntersville, NC 28078
(704)875-9092

ANALYTICAL RESULTS

Project: CHARLOTTE PIPE & FOUNDRY/UST
Pace Project No.: 9220762

Sample: SS-MRF/BASE **Lab ID: 9220762003** Collected: 06/03/08 15:20 Received: 06/04/08 15:35 Matrix: Solid

Results reported on a "dry-weight" basis

Parameters	Results	Units	Report Limit	DF	Prepared	Analyzed	CAS No.	Qual
8260/5035A Volatile Organics	Analytical Method: EPA 8260							
Naphthalene	ND	ug/kg	4.8	1		06/07/08 03:40	91-20-3	
n-Propylbenzene	ND	ug/kg	4.8	1		06/07/08 03:40	103-65-1	
Styrene	ND	ug/kg	4.8	1		06/07/08 03:40	100-42-5	
1,1,1,2-Tetrachloroethane	ND	ug/kg	4.8	1		06/07/08 03:40	630-20-6	
1,1,2,2-Tetrachloroethane	ND	ug/kg	4.8	1		06/07/08 03:40	79-34-5	
Tetrachloroethene	ND	ug/kg	4.8	1		06/07/08 03:40	127-18-4	
Toluene	ND	ug/kg	4.8	1		06/07/08 03:40	108-88-3	
1,2,3-Trichlorobenzene	ND	ug/kg	4.8	1		06/07/08 03:40	87-61-6	
1,2,4-Trichlorobenzene	ND	ug/kg	4.8	1		06/07/08 03:40	120-82-1	
1,1,1-Trichloroethane	ND	ug/kg	4.8	1		06/07/08 03:40	71-55-6	
1,1,2-Trichloroethane	ND	ug/kg	4.8	1		06/07/08 03:40	79-00-5	
Trichloroethene	ND	ug/kg	4.8	1		06/07/08 03:40	79-01-6	
Trichlorofluoromethane	ND	ug/kg	4.8	1		06/07/08 03:40	75-69-4	
1,2,3-Trichloropropane	ND	ug/kg	4.8	1		06/07/08 03:40	96-18-4	
1,2,4-Trimethylbenzene	ND	ug/kg	4.8	1		06/07/08 03:40	95-63-6	
1,3,5-Trimethylbenzene	ND	ug/kg	4.8	1		06/07/08 03:40	108-67-8	
Vinyl acetate	ND	ug/kg	48.1	1		06/07/08 03:40	108-05-4	
Vinyl chloride	ND	ug/kg	9.6	1		06/07/08 03:40	75-01-4	
Xylene (Total)	ND	ug/kg	14.4	1		06/07/08 03:40	1330-20-7	
m&p-Xylene	ND	ug/kg	9.6	1		06/07/08 03:40	1330-20-7	
o-Xylene	ND	ug/kg	4.8	1		06/07/08 03:40	95-47-6	
Dibromofluoromethane (S)	105	%	79-116	1		06/07/08 03:40	1868-53-7	
Toluene-d8 (S)	105	%	88-110	1		06/07/08 03:40	2037-26-5	
4-Bromofluorobenzene (S)	99	%	74-115	1		06/07/08 03:40	460-00-4	
1,2-Dichloroethane-d4 (S)	106	%	69-121	1		06/07/08 03:40	17060-07-0	
Percent Moisture	Analytical Method: ASTM D2974-87							
Percent Moisture	**6.9**	%	0.10	1		06/05/08 17:17		

This report shall not be reproduced, except in full,
without the written consent of Pace Analytical Services, Inc..

ACCREDITED IN ACCORDANCE WITH nelac

Pace Analytical®
www.pacelabs.com

Pace Analytical Services, Inc.
2225 Riverside Dr.
Asheville, NC 28804
(828)254-7176

Pace Analytical Services, Inc.
9800 Kincey Ave. Suite 100
Huntersville, NC 28078
(704)875-9092

ANALYTICAL RESULTS

Project: CHARLOTTE PIPE & FOUNDRY/UST
Pace Project No.: 9220762

Sample: SS-W WALL **Lab ID: 9220762004** Collected: 06/03/08 15:05 Received: 06/04/08 15:35 Matrix: Solid

Results reported on a "dry-weight" basis

Parameters	Results	Units	Report Limit	DF	Prepared	Analyzed	CAS No.	Qual
MADEP EPH NC Soil	Analytical Method: MADEP EPH Preparation Method: MADEP EPH							
Aliphatic (C09-C18)	ND	mg/kg	11.3	1	06/12/08 00:00	06/13/08 06:32		
Aliphatic (C19-C36)	ND	mg/kg	11.3	1	06/12/08 00:00	06/13/08 06:32		
Aromatic (C11-C22)	ND	mg/kg	11.3	1	06/12/08 00:00	06/13/08 06:32		
Nonatriacontane (S)	100	%	40-140	1	06/12/08 00:00	06/13/08 06:32	7194-86-7	
o-Terphenyl (S)	83	%	40-140	1	06/12/08 00:00	06/13/08 06:32	84-15-1	
2-Fluorobiphenyl (S)	100	%	40-140	1	06/12/08 00:00	06/13/08 06:32	321-60-8	
2-Bromonaphthalene (S)	106	%	40-140	1	06/12/08 00:00	06/13/08 06:32	580-13-2	
VPH NC Soil	Analytical Method: MADEP VPH Preparation Method: MADEP VPH							
Aliphatic (C05-C08)	ND	mg/kg	9.1	1	06/06/08 10:49	06/06/08 17:08		
Aliphatic (C09-C12)	ND	mg/kg	9.1	1	06/06/08 10:49	06/06/08 17:08		
Aromatic (C09-C10)	ND	mg/kg	9.1	1	06/06/08 10:49	06/06/08 17:08		
2,5-Dibromotoluene (PID)(S)	109	%	70-130	1	06/06/08 10:49	06/06/08 17:08		
2,5-Dibromotoluene (FID)(S)	107	%	70-130	1	06/06/08 10:49	06/06/08 17:08		
8270 MSSV Microwave	Analytical Method: EPA 8270 Preparation Method: EPA 3546							
Acenaphthene	ND	ug/kg	372	1	06/05/08 00:00	06/08/08 15:03	83-32-9	
Acenaphthylene	ND	ug/kg	372	1	06/05/08 00:00	06/08/08 15:03	208-96-8	
Aniline	ND	ug/kg	372	1	06/05/08 00:00	06/08/08 15:03	62-53-3	
Anthracene	ND	ug/kg	372	1	06/05/08 00:00	06/08/08 15:03	120-12-7	
Benzo(a)anthracene	ND	ug/kg	372	1	06/05/08 00:00	06/08/08 15:03	56-55-3	
Benzo(a)pyrene	ND	ug/kg	372	1	06/05/08 00:00	06/08/08 15:03	50-32-8	
Benzo(b)fluoranthene	ND	ug/kg	372	1	06/05/08 00:00	06/08/08 15:03	205-99-2	
Benzo(g,h,i)perylene	ND	ug/kg	372	1	06/05/08 00:00	06/08/08 15:03	191-24-2	
Benzo(k)fluoranthene	ND	ug/kg	372	1	06/05/08 00:00	06/08/08 15:03	207-08-9	
Benzoic acid	ND	ug/kg	1860	1	06/05/08 00:00	06/08/08 15:03	65-85-0	
Benzyl alcohol	ND	ug/kg	744	1	06/05/08 00:00	06/08/08 15:03	100-51-6	
4-Bromophenylphenyl ether	ND	ug/kg	372	1	06/05/08 00:00	06/08/08 15:03	101-55-3	
Butylbenzylphthalate	ND	ug/kg	372	1	06/05/08 00:00	06/08/08 15:03	85-68-7	
4-Chloro-3-methylphenol	ND	ug/kg	744	1	06/05/08 00:00	06/08/08 15:03	59-50-7	
4-Chloroaniline	ND	ug/kg	1860	1	06/05/08 00:00	06/08/08 15:03	106-47-8	
bis(2-Chloroethoxy)methane	ND	ug/kg	372	1	06/05/08 00:00	06/08/08 15:03	111-91-1	
bis(2-Chloroethyl) ether	ND	ug/kg	372	1	06/05/08 00:00	06/08/08 15:03	111-44-4	
bis(2-Chloroisopropyl) ether	ND	ug/kg	372	1	06/05/08 00:00	06/08/08 15:03	108-60-1	
2-Chloronaphthalene	ND	ug/kg	372	1	06/05/08 00:00	06/08/08 15:03	91-58-7	
2-Chlorophenol	ND	ug/kg	372	1	06/05/08 00:00	06/08/08 15:03	95-57-8	
4-Chlorophenylphenyl ether	ND	ug/kg	372	1	06/05/08 00:00	06/08/08 15:03	7005-72-3	
Chrysene	ND	ug/kg	372	1	06/05/08 00:00	06/08/08 15:03	218-01-9	
Dibenz(a,h)anthracene	ND	ug/kg	372	1	06/05/08 00:00	06/08/08 15:03	53-70-3	
Dibenzofuran	ND	ug/kg	372	1	06/05/08 00:00	06/08/08 15:03	132-64-9	
1,2-Dichlorobenzene	ND	ug/kg	372	1	06/05/08 00:00	06/08/08 15:03	95-50-1	
1,3-Dichlorobenzene	ND	ug/kg	372	1	06/05/08 00:00	06/08/08 15:03	541-73-1	
1,4-Dichlorobenzene	ND	ug/kg	372	1	06/05/08 00:00	06/08/08 15:03	106-46-7	
3,3'-Dichlorobenzidine	ND	ug/kg	1860	1	06/05/08 00:00	06/08/08 15:03	91-94-1	
2,4-Dichlorophenol	ND	ug/kg	372	1	06/05/08 00:00	06/08/08 15:03	120-83-2	

This report shall not be reproduced, except in full,
without the written consent of Pace Analytical Services, Inc..

ACCREDITED IN ACCORDANCE WITH nelac

Pace Analytical®
www.pacelabs.com

Pace Analytical Services, Inc.
2225 Riverside Dr.
Asheville, NC 28804
(828)254-7176

Pace Analytical Services, Inc.
9800 Kincey Ave. Suite 100
Huntersville, NC 28078
(704)875-9092

ANALYTICAL RESULTS

Project: CHARLOTTE PIPE & FOUNDRY/UST
Pace Project No.: 9220762

Sample: SS-W WALL **Lab ID: 9220762004** Collected: 06/03/08 15:05 Received: 06/04/08 15:35 Matrix: Solid

Results reported on a "dry-weight" basis

Parameters	Results	Units	Report Limit	DF	Prepared	Analyzed	CAS No.	Qual
8270 MSSV Microwave	Analytical Method: EPA 8270 Preparation Method: EPA 3546							
Diethylphthalate	ND	ug/kg	372	1	06/05/08 00:00	06/08/08 15:03	84-66-2	
2,4-Dimethylphenol	ND	ug/kg	372	1	06/05/08 00:00	06/08/08 15:03	105-67-9	
Dimethylphthalate	ND	ug/kg	372	1	06/05/08 00:00	06/08/08 15:03	131-11-3	
Di-n-butylphthalate	ND	ug/kg	372	1	06/05/08 00:00	06/08/08 15:03	84-74-2	
4,6-Dinitro-2-methylphenol	ND	ug/kg	744	1	06/05/08 00:00	06/08/08 15:03	534-52-1	
2,4-Dinitrophenol	ND	ug/kg	1860	1	06/05/08 00:00	06/08/08 15:03	51-28-5	
2,4-Dinitrotoluene	ND	ug/kg	372	1	06/05/08 00:00	06/08/08 15:03	121-14-2	
2,6-Dinitrotoluene	ND	ug/kg	372	1	06/05/08 00:00	06/08/08 15:03	606-20-2	
Di-n-octylphthalate	ND	ug/kg	372	1	06/05/08 00:00	06/08/08 15:03	117-84-0	
1,2-Diphenylhydrazine	ND	ug/kg	372	1	06/05/08 00:00	06/08/08 15:03	122-66-7	
bis(2-Ethylhexyl)phthalate	ND	ug/kg	372	1	06/05/08 00:00	06/08/08 15:03	117-81-7	
Fluoranthene	ND	ug/kg	372	1	06/05/08 00:00	06/08/08 15:03	206-44-0	
Fluorene	ND	ug/kg	372	1	06/05/08 00:00	06/08/08 15:03	86-73-7	
Hexachloro-1,3-butadiene	ND	ug/kg	372	1	06/05/08 00:00	06/08/08 15:03	87-68-3	
Hexachlorobenzene	ND	ug/kg	372	1	06/05/08 00:00	06/08/08 15:03	118-74-1	
Hexachlorocyclopentadiene	ND	ug/kg	372	1	06/05/08 00:00	06/08/08 15:03	77-47-4	
Hexachloroethane	ND	ug/kg	372	1	06/05/08 00:00	06/08/08 15:03	67-72-1	
Indeno(1,2,3-cd)pyrene	ND	ug/kg	372	1	06/05/08 00:00	06/08/08 15:03	193-39-5	
Isophorone	ND	ug/kg	372	1	06/05/08 00:00	06/08/08 15:03	78-59-1	
1-Methylnaphthalene	ND	ug/kg	372	1	06/05/08 00:00	06/08/08 15:03	90-12-0	
2-Methylnaphthalene	ND	ug/kg	372	1	06/05/08 00:00	06/08/08 15:03	91-57-6	
2-Methylphenol(o-Cresol)	ND	ug/kg	372	1	06/05/08 00:00	06/08/08 15:03	95-48-7	
3&4-Methylphenol(m&p Cresol)	ND	ug/kg	372	1	06/05/08 00:00	06/08/08 15:03		
Naphthalene	ND	ug/kg	372	1	06/05/08 00:00	06/08/08 15:03	91-20-3	
2-Nitroaniline	ND	ug/kg	1860	1	06/05/08 00:00	06/08/08 15:03	88-74-4	
3-Nitroaniline	ND	ug/kg	1860	1	06/05/08 00:00	06/08/08 15:03	99-09-2	
4-Nitroaniline	ND	ug/kg	744	1	06/05/08 00:00	06/08/08 15:03	100-01-6	
Nitrobenzene	ND	ug/kg	372	1	06/05/08 00:00	06/08/08 15:03	98-95-3	
2-Nitrophenol	ND	ug/kg	372	1	06/05/08 00:00	06/08/08 15:03	88-75-5	
4-Nitrophenol	ND	ug/kg	1860	1	06/05/08 00:00	06/08/08 15:03	100-02-7	
N-Nitrosodimethylamine	ND	ug/kg	372	1	06/05/08 00:00	06/08/08 15:03	62-75-9	
N-Nitroso-di-n-propylamine	ND	ug/kg	372	1	06/05/08 00:00	06/08/08 15:03	621-64-7	
N-Nitrosodiphenylamine	ND	ug/kg	372	1	06/05/08 00:00	06/08/08 15:03	86-30-6	
Pentachlorophenol	ND	ug/kg	1860	1	06/05/08 00:00	06/08/08 15:03	87-86-5	
Phenanthrene	ND	ug/kg	372	1	06/05/08 00:00	06/08/08 15:03	85-01-8	
Phenol	ND	ug/kg	372	1	06/05/08 00:00	06/08/08 15:03	108-95-2	
Pyrene	ND	ug/kg	372	1	06/05/08 00:00	06/08/08 15:03	129-00-0	
1,2,4-Trichlorobenzene	ND	ug/kg	372	1	06/05/08 00:00	06/08/08 15:03	120-82-1	
2,4,5-Trichlorophenol	ND	ug/kg	372	1	06/05/08 00:00	06/08/08 15:03	95-95-4	
2,4,6-Trichlorophenol	ND	ug/kg	372	1	06/05/08 00:00	06/08/08 15:03	88-06-2	
Nitrobenzene-d5 (S)	47	%	30-150	1	06/05/08 00:00	06/08/08 15:03	4165-60-0	
2-Fluorobiphenyl (S)	46	%	30-150	1	06/05/08 00:00	06/08/08 15:03	321-60-8	
Terphenyl-d14 (S)	54	%	30-150	1	06/05/08 00:00	06/08/08 15:03	1718-51-0	
Phenol-d6 (S)	40	%	30-150	1	06/05/08 00:00	06/08/08 15:03	13127-88-3	
2-Fluorophenol (S)	41	%	30-150	1	06/05/08 00:00	06/08/08 15:03	367-12-4	
2,4,6-Tribromophenol (S)	41	%	30-150	1	06/05/08 00:00	06/08/08 15:03	118-79-6	

This report shall not be reproduced, except in full,
without the written consent of Pace Analytical Services, Inc..

ACCREDITED IN ACCORDANCE WITH nelac

Pace Analytical®
www.pacelabs.com

Pace Analytical Services, Inc.
2225 Riverside Dr.
Asheville, NC 28804
(828)254-7176

Pace Analytical Services, Inc.
9800 Kincey Ave. Suite 100
Huntersville, NC 28078
(704)875-9092

ANALYTICAL RESULTS

Project: CHARLOTTE PIPE & FOUNDRY/UST
Pace Project No.: 9220762

Sample: SS-W WALL **Lab ID: 9220762004** Collected: 06/03/08 15:05 Received: 06/04/08 15:35 Matrix: Solid

Results reported on a "dry-weight" basis

Parameters	Results	Units	Report Limit	DF	Prepared	Analyzed	CAS No.	Qual
8260/5035A Volatile Organics	Analytical Method: EPA 8260							
Acetone	ND	ug/kg	103	1		06/07/08 19:04	67-64-1	
Benzene	ND	ug/kg	5.2	1		06/07/08 19:04	71-43-2	
Bromobenzene	ND	ug/kg	5.2	1		06/07/08 19:04	108-86-1	
Bromochloromethane	ND	ug/kg	5.2	1		06/07/08 19:04	74-97-5	
Bromodichloromethane	ND	ug/kg	5.2	1		06/07/08 19:04	75-27-4	
Bromoform	ND	ug/kg	5.2	1		06/07/08 19:04	75-25-2	
Bromomethane	ND	ug/kg	10.3	1		06/07/08 19:04	74-83-9	
2-Butanone (MEK)	ND	ug/kg	103	1		06/07/08 19:04	78-93-3	
n-Butylbenzene	ND	ug/kg	5.2	1		06/07/08 19:04	104-51-8	
sec-Butylbenzene	ND	ug/kg	5.2	1		06/07/08 19:04	135-98-8	
tert-Butylbenzene	ND	ug/kg	5.2	1		06/07/08 19:04	98-06-6	
Carbon tetrachloride	ND	ug/kg	5.2	1		06/07/08 19:04	56-23-5	
Chlorobenzene	ND	ug/kg	5.2	1		06/07/08 19:04	108-90-7	
Chloroethane	ND	ug/kg	10.3	1		06/07/08 19:04	75-00-3	
Chloroform	ND	ug/kg	5.2	1		06/07/08 19:04	67-66-3	
Chloromethane	ND	ug/kg	10.3	1		06/07/08 19:04	74-87-3	
2-Chlorotoluene	ND	ug/kg	5.2	1		06/07/08 19:04	95-49-8	
4-Chlorotoluene	ND	ug/kg	5.2	1		06/07/08 19:04	106-43-4	
1,2-Dibromo-3-chloropropane	ND	ug/kg	5.2	1		06/07/08 19:04	96-12-8	
Dibromochloromethane	ND	ug/kg	5.2	1		06/07/08 19:04	124-48-1	
1,2-Dibromoethane (EDB)	ND	ug/kg	5.2	1		06/07/08 19:04	106-93-4	
Dibromomethane	ND	ug/kg	5.2	1		06/07/08 19:04	74-95-3	
1,2-Dichlorobenzene	ND	ug/kg	5.2	1		06/07/08 19:04	95-50-1	
1,3-Dichlorobenzene	ND	ug/kg	5.2	1		06/07/08 19:04	541-73-1	
1,4-Dichlorobenzene	ND	ug/kg	5.2	1		06/07/08 19:04	106-46-7	
Dichlorodifluoromethane	ND	ug/kg	10.3	1		06/07/08 19:04	75-71-8	
1,1-Dichloroethane	ND	ug/kg	5.2	1		06/07/08 19:04	75-34-3	
1,2-Dichloroethane	ND	ug/kg	5.2	1		06/07/08 19:04	107-06-2	
1,1-Dichloroethene	ND	ug/kg	5.2	1		06/07/08 19:04	75-35-4	
cis-1,2-Dichloroethene	ND	ug/kg	5.2	1		06/07/08 19:04	156-59-2	
trans-1,2-Dichloroethene	ND	ug/kg	5.2	1		06/07/08 19:04	156-60-5	
1,2-Dichloropropane	ND	ug/kg	5.2	1		06/07/08 19:04	78-87-5	
1,3-Dichloropropane	ND	ug/kg	5.2	1		06/07/08 19:04	142-28-9	
2,2-Dichloropropane	ND	ug/kg	5.2	1		06/07/08 19:04	594-20-7	
1,1-Dichloropropene	ND	ug/kg	5.2	1		06/07/08 19:04	563-58-6	
cis-1,3-Dichloropropene	ND	ug/kg	5.2	1		06/07/08 19:04	10061-01-5	
trans-1,3-Dichloropropene	ND	ug/kg	5.2	1		06/07/08 19:04	10061-02-6	
Diisopropyl ether	ND	ug/kg	5.2	1		06/07/08 19:04	108-20-3	
Ethylbenzene	ND	ug/kg	5.2	1		06/07/08 19:04	100-41-4	
Hexachloro-1,3-butadiene	ND	ug/kg	5.2	1		06/07/08 19:04	87-68-3	
2-Hexanone	ND	ug/kg	51.5	1		06/07/08 19:04	591-78-6	
Isopropylbenzene (Cumene)	ND	ug/kg	5.2	1		06/07/08 19:04	98-82-8	
p-Isopropyltoluene	ND	ug/kg	5.2	1		06/07/08 19:04	99-87-6	
Methylene Chloride	ND	ug/kg	5.2	1		06/07/08 19:04	75-09-2	
4-Methyl-2-pentanone (MIBK)	ND	ug/kg	51.5	1		06/07/08 19:04	108-10-1	
Methyl-tert-butyl ether	ND	ug/kg	5.2	1		06/07/08 19:04	1634-04-4	

This report shall not be reproduced, except in full,
without the written consent of Pace Analytical Services, Inc..

ACCREDITED IN ACCORDANCE WITH nelac

Pace Analytical®
www.pacelabs.com

Pace Analytical Services, Inc.
2225 Riverside Dr.
Asheville, NC 28804
(828)254-7176

Pace Analytical Services, Inc.
9800 Kincey Ave. Suite 100
Huntersville, NC 28078
(704)875-9092

ANALYTICAL RESULTS

Project: CHARLOTTE PIPE & FOUNDRY/UST
Pace Project No.: 9220762

Sample: SS-W WALL **Lab ID: 9220762004** Collected: 06/03/08 15:05 Received: 06/04/08 15:35 Matrix: Solid

Results reported on a "dry-weight" basis

Parameters	Results	Units	Report Limit	DF	Prepared	Analyzed	CAS No.	Qual
8260/5035A Volatile Organics	Analytical Method: EPA 8260							
Naphthalene	ND	ug/kg	5.2	1		06/07/08 19:04	91-20-3	
n-Propylbenzene	ND	ug/kg	5.2	1		06/07/08 19:04	103-65-1	
Styrene	ND	ug/kg	5.2	1		06/07/08 19:04	100-42-5	
1,1,1,2-Tetrachloroethane	ND	ug/kg	5.2	1		06/07/08 19:04	630-20-6	
1,1,2,2-Tetrachloroethane	ND	ug/kg	5.2	1		06/07/08 19:04	79-34-5	
Tetrachloroethene	ND	ug/kg	5.2	1		06/07/08 19:04	127-18-4	
Toluene	ND	ug/kg	5.2	1		06/07/08 19:04	108-88-3	
1,2,3-Trichlorobenzene	ND	ug/kg	5.2	1		06/07/08 19:04	87-61-6	
1,2,4-Trichlorobenzene	ND	ug/kg	5.2	1		06/07/08 19:04	120-82-1	
1,1,1-Trichloroethane	ND	ug/kg	5.2	1		06/07/08 19:04	71-55-6	
1,1,2-Trichloroethane	ND	ug/kg	5.2	1		06/07/08 19:04	79-00-5	
Trichloroethene	ND	ug/kg	5.2	1		06/07/08 19:04	79-01-6	
Trichlorofluoromethane	ND	ug/kg	5.2	1		06/07/08 19:04	75-69-4	
1,2,3-Trichloropropane	ND	ug/kg	5.2	1		06/07/08 19:04	96-18-4	
1,2,4-Trimethylbenzene	ND	ug/kg	5.2	1		06/07/08 19:04	95-63-6	
1,3,5-Trimethylbenzene	ND	ug/kg	5.2	1		06/07/08 19:04	108-67-8	
Vinyl acetate	ND	ug/kg	51.5	1		06/07/08 19:04	108-05-4	
Vinyl chloride	ND	ug/kg	10.3	1		06/07/08 19:04	75-01-4	
Xylene (Total)	ND	ug/kg	15.5	1		06/07/08 19:04	1330-20-7	
m&p-Xylene	ND	ug/kg	10.3	1		06/07/08 19:04	1330-20-7	
o-Xylene	ND	ug/kg	5.2	1		06/07/08 19:04	95-47-6	
Dibromofluoromethane (S)	105	%	79-116	1		06/07/08 19:04	1868-53-7	
Toluene-d8 (S)	102	%	88-110	1		06/07/08 19:04	2037-26-5	
4-Bromofluorobenzene (S)	95	%	74-115	1		06/07/08 19:04	460-00-4	
1,2-Dichloroethane-d4 (S)	105	%	69-121	1		06/07/08 19:04	17060-07-0	
Percent Moisture	Analytical Method: ASTM D2974-87							
Percent Moisture	**11.3**	%	0.10	1		06/05/08 17:17		

This report shall not be reproduced, except in full,
without the written consent of Pace Analytical Services, Inc..

ACCREDITED IN ACCORDANCE WITH nelac

Pace Analytical®
www.pacelabs.com

Pace Analytical Services, Inc.
2225 Riverside Dr.
Asheville, NC 28804
(828)254-7176

Pace Analytical Services, Inc.
9800 Kincey Ave. Suite 100
Huntersville, NC 28078
(704)875-9092

ANALYTICAL RESULTS

Project: CHARLOTTE PIPE & FOUNDRY/UST
Pace Project No.: 9220762

Sample: SS-N WALL **Lab ID: 9220762005** Collected: 06/03/08 15:55 Received: 06/04/08 15:35 Matrix: Solid

Results reported on a "dry-weight" basis

Parameters	Results	Units	Report Limit	DF	Prepared	Analyzed	CAS No.	Qual
MADEP EPH NC Soil	Analytical Method: MADEP EPH Preparation Method: MADEP EPH							
Aliphatic (C09-C18)	ND	mg/kg	11.2	1	06/12/08 00:00	06/13/08 07:07		
Aliphatic (C19-C36)	ND	mg/kg	11.2	1	06/12/08 00:00	06/13/08 07:07		
Aromatic (C11-C22)	ND	mg/kg	11.2	1	06/12/08 00:00	06/13/08 07:07		
Nonatriacontane (S)	93	%	40-140	1	06/12/08 00:00	06/13/08 07:07	7194-86-7	
o-Terphenyl (S)	91	%	40-140	1	06/12/08 00:00	06/13/08 07:07	84-15-1	
2-Fluorobiphenyl (S)	101	%	40-140	1	06/12/08 00:00	06/13/08 07:07	321-60-8	
2-Bromonaphthalene (S)	110	%	40-140	1	06/12/08 00:00	06/13/08 07:07	580-13-2	
VPH NC Soil	Analytical Method: MADEP VPH Preparation Method: MADEP VPH							
Aliphatic (C05-C08)	ND	mg/kg	9.8	1	06/06/08 10:49	06/06/08 17:35		
Aliphatic (C09-C12)	ND	mg/kg	9.8	1	06/06/08 10:49	06/06/08 17:35		
Aromatic (C09-C10)	ND	mg/kg	9.8	1	06/06/08 10:49	06/06/08 17:35		
2,5-Dibromotoluene (PID)(S)	110	%	70-130	1	06/06/08 10:49	06/06/08 17:35		
2,5-Dibromotoluene (FID)(S)	108	%	70-130	1	06/06/08 10:49	06/06/08 17:35		
8270 MSSV Microwave	Analytical Method: EPA 8270 Preparation Method: EPA 3546							
Acenaphthene	ND	ug/kg	371	1	06/05/08 00:00	06/08/08 15:29	83-32-9	
Acenaphthylene	ND	ug/kg	371	1	06/05/08 00:00	06/08/08 15:29	208-96-8	
Aniline	ND	ug/kg	371	1	06/05/08 00:00	06/08/08 15:29	62-53-3	
Anthracene	ND	ug/kg	371	1	06/05/08 00:00	06/08/08 15:29	120-12-7	
Benzo(a)anthracene	ND	ug/kg	371	1	06/05/08 00:00	06/08/08 15:29	56-55-3	
Benzo(a)pyrene	ND	ug/kg	371	1	06/05/08 00:00	06/08/08 15:29	50-32-8	
Benzo(b)fluoranthene	ND	ug/kg	371	1	06/05/08 00:00	06/08/08 15:29	205-99-2	
Benzo(g,h,i)perylene	ND	ug/kg	371	1	06/05/08 00:00	06/08/08 15:29	191-24-2	
Benzo(k)fluoranthene	ND	ug/kg	371	1	06/05/08 00:00	06/08/08 15:29	207-08-9	
Benzoic acid	ND	ug/kg	1850	1	06/05/08 00:00	06/08/08 15:29	65-85-0	
Benzyl alcohol	ND	ug/kg	742	1	06/05/08 00:00	06/08/08 15:29	100-51-6	
4-Bromophenylphenyl ether	ND	ug/kg	371	1	06/05/08 00:00	06/08/08 15:29	101-55-3	
Butylbenzylphthalate	ND	ug/kg	371	1	06/05/08 00:00	06/08/08 15:29	85-68-7	
4-Chloro-3-methylphenol	ND	ug/kg	742	1	06/05/08 00:00	06/08/08 15:29	59-50-7	
4-Chloroaniline	ND	ug/kg	1850	1	06/05/08 00:00	06/08/08 15:29	106-47-8	
bis(2-Chloroethoxy)methane	ND	ug/kg	371	1	06/05/08 00:00	06/08/08 15:29	111-91-1	
bis(2-Chloroethyl) ether	ND	ug/kg	371	1	06/05/08 00:00	06/08/08 15:29	111-44-4	
bis(2-Chloroisopropyl) ether	ND	ug/kg	371	1	06/05/08 00:00	06/08/08 15:29	108-60-1	
2-Chloronaphthalene	ND	ug/kg	371	1	06/05/08 00:00	06/08/08 15:29	91-58-7	
2-Chlorophenol	ND	ug/kg	371	1	06/05/08 00:00	06/08/08 15:29	95-57-8	
4-Chlorophenylphenyl ether	ND	ug/kg	371	1	06/05/08 00:00	06/08/08 15:29	7005-72-3	
Chrysene	ND	ug/kg	371	1	06/05/08 00:00	06/08/08 15:29	218-01-9	
Dibenz(a,h)anthracene	ND	ug/kg	371	1	06/05/08 00:00	06/08/08 15:29	53-70-3	
Dibenzofuran	ND	ug/kg	371	1	06/05/08 00:00	06/08/08 15:29	132-64-9	
1,2-Dichlorobenzene	ND	ug/kg	371	1	06/05/08 00:00	06/08/08 15:29	95-50-1	
1,3-Dichlorobenzene	ND	ug/kg	371	1	06/05/08 00:00	06/08/08 15:29	541-73-1	
1,4-Dichlorobenzene	ND	ug/kg	371	1	06/05/08 00:00	06/08/08 15:29	106-46-7	
3,3'-Dichlorobenzidine	ND	ug/kg	1850	1	06/05/08 00:00	06/08/08 15:29	91-94-1	
2,4-Dichlorophenol	ND	ug/kg	371	1	06/05/08 00:00	06/08/08 15:29	120-83-2	

This report shall not be reproduced, except in full,
without the written consent of Pace Analytical Services, Inc..

ACCREDITED IN ACCORDANCE WITH nelac

Pace Analytical®
www.pacelabs.com

Pace Analytical Services, Inc.
2225 Riverside Dr.
Asheville, NC 28804
(828)254-7176

Pace Analytical Services, Inc.
9800 Kincey Ave. Suite 100
Huntersville, NC 28078
(704)875-9092

ANALYTICAL RESULTS

Project: CHARLOTTE PIPE & FOUNDRY/UST
Pace Project No.: 9220762

Sample: SS-N WALL **Lab ID: 9220762005** Collected: 06/03/08 15:55 Received: 06/04/08 15:35 Matrix: Solid

Results reported on a "dry-weight" basis

Parameters	Results	Units	Report Limit	DF	Prepared	Analyzed	CAS No.	Qual
8270 MSSV Microwave	Analytical Method: EPA 8270 Preparation Method: EPA 3546							
Diethylphthalate	ND	ug/kg	371	1	06/05/08 00:00	06/08/08 15:29	84-66-2	
2,4-Dimethylphenol	ND	ug/kg	371	1	06/05/08 00:00	06/08/08 15:29	105-67-9	
Dimethylphthalate	ND	ug/kg	371	1	06/05/08 00:00	06/08/08 15:29	131-11-3	
Di-n-butylphthalate	ND	ug/kg	371	1	06/05/08 00:00	06/08/08 15:29	84-74-2	
4,6-Dinitro-2-methylphenol	ND	ug/kg	742	1	06/05/08 00:00	06/08/08 15:29	534-52-1	
2,4-Dinitrophenol	ND	ug/kg	1850	1	06/05/08 00:00	06/08/08 15:29	51-28-5	
2,4-Dinitrotoluene	ND	ug/kg	371	1	06/05/08 00:00	06/08/08 15:29	121-14-2	
2,6-Dinitrotoluene	ND	ug/kg	371	1	06/05/08 00:00	06/08/08 15:29	606-20-2	
Di-n-octylphthalate	ND	ug/kg	371	1	06/05/08 00:00	06/08/08 15:29	117-84-0	
1,2-Diphenylhydrazine	ND	ug/kg	371	1	06/05/08 00:00	06/08/08 15:29	122-66-7	
bis(2-Ethylhexyl)phthalate	ND	ug/kg	371	1	06/05/08 00:00	06/08/08 15:29	117-81-7	
Fluoranthene	ND	ug/kg	371	1	06/05/08 00:00	06/08/08 15:29	206-44-0	
Fluorene	ND	ug/kg	371	1	06/05/08 00:00	06/08/08 15:29	86-73-7	
Hexachloro-1,3-butadiene	ND	ug/kg	371	1	06/05/08 00:00	06/08/08 15:29	87-68-3	
Hexachlorobenzene	ND	ug/kg	371	1	06/05/08 00:00	06/08/08 15:29	118-74-1	
Hexachlorocyclopentadiene	ND	ug/kg	371	1	06/05/08 00:00	06/08/08 15:29	77-47-4	
Hexachloroethane	ND	ug/kg	371	1	06/05/08 00:00	06/08/08 15:29	67-72-1	
Indeno(1,2,3-cd)pyrene	ND	ug/kg	371	1	06/05/08 00:00	06/08/08 15:29	193-39-5	
Isophorone	ND	ug/kg	371	1	06/05/08 00:00	06/08/08 15:29	78-59-1	
1-Methylnaphthalene	ND	ug/kg	371	1	06/05/08 00:00	06/08/08 15:29	90-12-0	
2-Methylnaphthalene	ND	ug/kg	371	1	06/05/08 00:00	06/08/08 15:29	91-57-6	
2-Methylphenol(o-Cresol)	ND	ug/kg	371	1	06/05/08 00:00	06/08/08 15:29	95-48-7	
3&4-Methylphenol(m&p Cresol)	ND	ug/kg	371	1	06/05/08 00:00	06/08/08 15:29		
Naphthalene	ND	ug/kg	371	1	06/05/08 00:00	06/08/08 15:29	91-20-3	
2-Nitroaniline	ND	ug/kg	1850	1	06/05/08 00:00	06/08/08 15:29	88-74-4	
3-Nitroaniline	ND	ug/kg	1850	1	06/05/08 00:00	06/08/08 15:29	99-09-2	
4-Nitroaniline	ND	ug/kg	742	1	06/05/08 00:00	06/08/08 15:29	100-01-6	
Nitrobenzene	ND	ug/kg	371	1	06/05/08 00:00	06/08/08 15:29	98-95-3	
2-Nitrophenol	ND	ug/kg	371	1	06/05/08 00:00	06/08/08 15:29	88-75-5	
4-Nitrophenol	ND	ug/kg	1850	1	06/05/08 00:00	06/08/08 15:29	100-02-7	
N-Nitrosodimethylamine	ND	ug/kg	371	1	06/05/08 00:00	06/08/08 15:29	62-75-9	
N-Nitroso-di-n-propylamine	ND	ug/kg	371	1	06/05/08 00:00	06/08/08 15:29	621-64-7	
N-Nitrosodiphenylamine	ND	ug/kg	371	1	06/05/08 00:00	06/08/08 15:29	86-30-6	
Pentachlorophenol	ND	ug/kg	1850	1	06/05/08 00:00	06/08/08 15:29	87-86-5	
Phenanthrene	ND	ug/kg	371	1	06/05/08 00:00	06/08/08 15:29	85-01-8	
Phenol	ND	ug/kg	371	1	06/05/08 00:00	06/08/08 15:29	108-95-2	
Pyrene	ND	ug/kg	371	1	06/05/08 00:00	06/08/08 15:29	129-00-0	
1,2,4-Trichlorobenzene	ND	ug/kg	371	1	06/05/08 00:00	06/08/08 15:29	120-82-1	
2,4,5-Trichlorophenol	ND	ug/kg	371	1	06/05/08 00:00	06/08/08 15:29	95-95-4	
2,4,6-Trichlorophenol	ND	ug/kg	371	1	06/05/08 00:00	06/08/08 15:29	88-06-2	
Nitrobenzene-d5 (S)	64	%	30-150	1	06/05/08 00:00	06/08/08 15:29	4165-60-0	
2-Fluorobiphenyl (S)	65	%	30-150	1	06/05/08 00:00	06/08/08 15:29	321-60-8	
Terphenyl-d14 (S)	68	%	30-150	1	06/05/08 00:00	06/08/08 15:29	1718-51-0	
Phenol-d6 (S)	57	%	30-150	1	06/05/08 00:00	06/08/08 15:29	13127-88-3	
2-Fluorophenol (S)	56	%	30-150	1	06/05/08 00:00	06/08/08 15:29	367-12-4	
2,4,6-Tribromophenol (S)	47	%	30-150	1	06/05/08 00:00	06/08/08 15:29	118-79-6	

This report shall not be reproduced, except in full,
without the written consent of Pace Analytical Services, Inc..

ACCREDITED IN ACCORDANCE WITH nelac

Pace Analytical®
www.pacelabs.com

Pace Analytical Services, Inc.
2225 Riverside Dr.
Asheville, NC 28804
(828)254-7176

Pace Analytical Services, Inc.
9800 Kincey Ave. Suite 100
Huntersville, NC 28078
(704)875-9092

ANALYTICAL RESULTS

Project: CHARLOTTE PIPE & FOUNDRY/UST
Pace Project No.: 9220762

Sample: SS-N WALL **Lab ID: 9220762005** Collected: 06/03/08 15:55 Received: 06/04/08 15:35 Matrix: Solid

Results reported on a "dry-weight" basis

Parameters	Results	Units	Report Limit	DF	Prepared	Analyzed	CAS No.	Qual
8260/5035A Volatile Organics	Analytical Method: EPA 8260							
Acetone	ND	ug/kg	100	1		06/07/08 19:23	67-64-1	
Benzene	ND	ug/kg	5.0	1		06/07/08 19:23	71-43-2	
Bromobenzene	ND	ug/kg	5.0	1		06/07/08 19:23	108-86-1	
Bromochloromethane	ND	ug/kg	5.0	1		06/07/08 19:23	74-97-5	
Bromodichloromethane	ND	ug/kg	5.0	1		06/07/08 19:23	75-27-4	
Bromoform	ND	ug/kg	5.0	1		06/07/08 19:23	75-25-2	
Bromomethane	ND	ug/kg	10.0	1		06/07/08 19:23	74-83-9	
2-Butanone (MEK)	ND	ug/kg	100	1		06/07/08 19:23	78-93-3	
n-Butylbenzene	ND	ug/kg	5.0	1		06/07/08 19:23	104-51-8	
sec-Butylbenzene	ND	ug/kg	5.0	1		06/07/08 19:23	135-98-8	
tert-Butylbenzene	ND	ug/kg	5.0	1		06/07/08 19:23	98-06-6	
Carbon tetrachloride	ND	ug/kg	5.0	1		06/07/08 19:23	56-23-5	
Chlorobenzene	ND	ug/kg	5.0	1		06/07/08 19:23	108-90-7	
Chloroethane	ND	ug/kg	10.0	1		06/07/08 19:23	75-00-3	
Chloroform	ND	ug/kg	5.0	1		06/07/08 19:23	67-66-3	
Chloromethane	ND	ug/kg	10.0	1		06/07/08 19:23	74-87-3	
2-Chlorotoluene	ND	ug/kg	5.0	1		06/07/08 19:23	95-49-8	
4-Chlorotoluene	ND	ug/kg	5.0	1		06/07/08 19:23	106-43-4	
1,2-Dibromo-3-chloropropane	ND	ug/kg	5.0	1		06/07/08 19:23	96-12-8	
Dibromochloromethane	ND	ug/kg	5.0	1		06/07/08 19:23	124-48-1	
1,2-Dibromoethane (EDB)	ND	ug/kg	5.0	1		06/07/08 19:23	106-93-4	
Dibromomethane	ND	ug/kg	5.0	1		06/07/08 19:23	74-95-3	
1,2-Dichlorobenzene	ND	ug/kg	5.0	1		06/07/08 19:23	95-50-1	
1,3-Dichlorobenzene	ND	ug/kg	5.0	1		06/07/08 19:23	541-73-1	
1,4-Dichlorobenzene	ND	ug/kg	5.0	1		06/07/08 19:23	106-46-7	
Dichlorodifluoromethane	ND	ug/kg	10.0	1		06/07/08 19:23	75-71-8	
1,1-Dichloroethane	ND	ug/kg	5.0	1		06/07/08 19:23	75-34-3	
1,2-Dichloroethane	ND	ug/kg	5.0	1		06/07/08 19:23	107-06-2	
1,1-Dichloroethene	ND	ug/kg	5.0	1		06/07/08 19:23	75-35-4	
cis-1,2-Dichloroethene	ND	ug/kg	5.0	1		06/07/08 19:23	156-59-2	
trans-1,2-Dichloroethene	ND	ug/kg	5.0	1		06/07/08 19:23	156-60-5	
1,2-Dichloropropane	ND	ug/kg	5.0	1		06/07/08 19:23	78-87-5	
1,3-Dichloropropane	ND	ug/kg	5.0	1		06/07/08 19:23	142-28-9	
2,2-Dichloropropane	ND	ug/kg	5.0	1		06/07/08 19:23	594-20-7	
1,1-Dichloropropene	ND	ug/kg	5.0	1		06/07/08 19:23	563-58-6	
cis-1,3-Dichloropropene	ND	ug/kg	5.0	1		06/07/08 19:23	10061-01-5	
trans-1,3-Dichloropropene	ND	ug/kg	5.0	1		06/07/08 19:23	10061-02-6	
Diisopropyl ether	ND	ug/kg	5.0	1		06/07/08 19:23	108-20-3	
Ethylbenzene	ND	ug/kg	5.0	1		06/07/08 19:23	100-41-4	
Hexachloro-1,3-butadiene	ND	ug/kg	5.0	1		06/07/08 19:23	87-68-3	
2-Hexanone	ND	ug/kg	50.2	1		06/07/08 19:23	591-78-6	
Isopropylbenzene (Cumene)	ND	ug/kg	5.0	1		06/07/08 19:23	98-82-8	
p-Isopropyltoluene	ND	ug/kg	5.0	1		06/07/08 19:23	99-87-6	
Methylene Chloride	ND	ug/kg	5.0	1		06/07/08 19:23	75-09-2	
4-Methyl-2-pentanone (MIBK)	ND	ug/kg	50.2	1		06/07/08 19:23	108-10-1	
Methyl-tert-butyl ether	ND	ug/kg	5.0	1		06/07/08 19:23	1634-04-4	

This report shall not be reproduced, except in full,
without the written consent of Pace Analytical Services, Inc..

ACCREDITED IN ACCORDANCE WITH nelac

Pace Analytical®
www.pacelabs.com

Pace Analytical Services, Inc.
2225 Riverside Dr.
Asheville, NC 28804
(828)254-7176

Pace Analytical Services, Inc.
9800 Kincey Ave. Suite 100
Huntersville, NC 28078
(704)875-9092

ANALYTICAL RESULTS

Project: CHARLOTTE PIPE & FOUNDRY/UST
Pace Project No.: 9220762

Sample: SS-N WALL **Lab ID: 9220762005** Collected: 06/03/08 15:55 Received: 06/04/08 15:35 Matrix: Solid

Results reported on a "dry-weight" basis

Parameters	Results	Units	Report Limit	DF	Prepared	Analyzed	CAS No.	Qual
8260/5035A Volatile Organics	Analytical Method: EPA 8260							
Naphthalene	ND	ug/kg	5.0	1		06/07/08 19:23	91-20-3	
n-Propylbenzene	ND	ug/kg	5.0	1		06/07/08 19:23	103-65-1	
Styrene	ND	ug/kg	5.0	1		06/07/08 19:23	100-42-5	
1,1,1,2-Tetrachloroethane	ND	ug/kg	5.0	1		06/07/08 19:23	630-20-6	
1,1,2,2-Tetrachloroethane	ND	ug/kg	5.0	1		06/07/08 19:23	79-34-5	
Tetrachloroethene	ND	ug/kg	5.0	1		06/07/08 19:23	127-18-4	
Toluene	ND	ug/kg	5.0	1		06/07/08 19:23	108-88-3	
1,2,3-Trichlorobenzene	ND	ug/kg	5.0	1		06/07/08 19:23	87-61-6	
1,2,4-Trichlorobenzene	ND	ug/kg	5.0	1		06/07/08 19:23	120-82-1	
1,1,1-Trichloroethane	ND	ug/kg	5.0	1		06/07/08 19:23	71-55-6	
1,1,2-Trichloroethane	ND	ug/kg	5.0	1		06/07/08 19:23	79-00-5	
Trichloroethene	ND	ug/kg	5.0	1		06/07/08 19:23	79-01-6	
Trichlorofluoromethane	ND	ug/kg	5.0	1		06/07/08 19:23	75-69-4	
1,2,3-Trichloropropane	ND	ug/kg	5.0	1		06/07/08 19:23	96-18-4	
1,2,4-Trimethylbenzene	ND	ug/kg	5.0	1		06/07/08 19:23	95-63-6	
1,3,5-Trimethylbenzene	ND	ug/kg	5.0	1		06/07/08 19:23	108-67-8	
Vinyl acetate	ND	ug/kg	50.2	1		06/07/08 19:23	108-05-4	
Vinyl chloride	ND	ug/kg	10.0	1		06/07/08 19:23	75-01-4	
Xylene (Total)	ND	ug/kg	15.1	1		06/07/08 19:23	1330-20-7	
m&p-Xylene	ND	ug/kg	10.0	1		06/07/08 19:23	1330-20-7	
o-Xylene	ND	ug/kg	5.0	1		06/07/08 19:23	95-47-6	
Dibromofluoromethane (S)	112	%	79-116	1		06/07/08 19:23	1868-53-7	
Toluene-d8 (S)	108	%	88-110	1		06/07/08 19:23	2037-26-5	
4-Bromofluorobenzene (S)	100	%	74-115	1		06/07/08 19:23	460-00-4	
1,2-Dichloroethane-d4 (S)	112	%	69-121	1		06/07/08 19:23	17060-07-0	
Percent Moisture	Analytical Method: ASTM D2974-87							
Percent Moisture	**11.0**	%	0.10	1		06/05/08 17:18		

This report shall not be reproduced, except in full,
without the written consent of Pace Analytical Services, Inc..

ACCREDITED IN ACCORDANCE WITH nelac

Pace Analytical
www.pacelabs.com

Pace Analytical Services, Inc.
2225 Riverside Dr.
Asheville, NC 28804
(828)254-7176

Pace Analytical Services, Inc.
9800 Kincey Ave. Suite 100
Huntersville, NC 28078
(704)875-9092

QUALITY CONTROL DATA

Project: CHARLOTTE PIPE & FOUNDRY/UST
Pace Project No.: 9220762

QC Batch: PMST/1709 — Analysis Method: ASTM D2974-87
QC Batch Method: ASTM D2974-87 — Analysis Description: Dry Weight/Percent Moisture
Associated Lab Samples: 9220762001, 9220762002, 9220762003, 9220762004, 9220762005

SAMPLE DUPLICATE: 124162

Parameter	Units	9220657001 Result	Dup Result	RPD	Qualifiers
Percent Moisture	%	94.9	95.4	.5	

This report shall not be reproduced, except in full,
without the written consent of Pace Analytical Services, Inc..

ACCREDITED IN ACCORDANCE WITH nelac

Pace Analytical®
www.pacelabs.com

Pace Analytical Services, Inc.
2225 Riverside Dr.
Asheville, NC 28804
(828)254-7176

Pace Analytical Services, Inc.
9800 Kincey Ave. Suite 100
Huntersville, NC 28078
(704)875-9092

QUALITY CONTROL DATA

Project: CHARLOTTE PIPE & FOUNDRY/UST
Pace Project No.: 9220762

QC Batch: OEXT/3438 Analysis Method: EPA 8270
QC Batch Method: EPA 3546 Analysis Description: 8270 Solid MSSV Microwave
Associated Lab Samples: 9220762002, 9220762003, 9220762004, 9220762005

METHOD BLANK: 124670
Associated Lab Samples: 9220762002, 9220762003, 9220762004, 9220762005

Parameter	Units	Blank Result	Reporting Limit	Qualifiers
1,2,4-Trichlorobenzene	ug/kg	ND	330	
1,2-Dichlorobenzene	ug/kg	ND	330	
1,2-Diphenylhydrazine	ug/kg	ND	330	
1,3-Dichlorobenzene	ug/kg	ND	330	
1,4-Dichlorobenzene	ug/kg	ND	330	
1-Methylnaphthalene	ug/kg	ND	330	
2,4,5-Trichlorophenol	ug/kg	ND	330	
2,4,6-Trichlorophenol	ug/kg	ND	330	
2,4-Dichlorophenol	ug/kg	ND	330	
2,4-Dimethylphenol	ug/kg	ND	330	
2,4-Dinitrophenol	ug/kg	ND	1650	
2,4-Dinitrotoluene	ug/kg	ND	330	
2,6-Dinitrotoluene	ug/kg	ND	330	
2-Chloronaphthalene	ug/kg	ND	330	
2-Chlorophenol	ug/kg	ND	330	
2-Methylnaphthalene	ug/kg	ND	330	
2-Methylphenol(o-Cresol)	ug/kg	ND	330	
2-Nitroaniline	ug/kg	ND	1650	
2-Nitrophenol	ug/kg	ND	330	
3&4-Methylphenol(m&p Cresol)	ug/kg	ND	330	
3,3'-Dichlorobenzidine	ug/kg	ND	1650	
3-Nitroaniline	ug/kg	ND	1650	
4,6-Dinitro-2-methylphenol	ug/kg	ND	660	
4-Bromophenylphenyl ether	ug/kg	ND	330	
4-Chloro-3-methylphenol	ug/kg	ND	660	
4-Chloroaniline	ug/kg	ND	1650	
4-Chlorophenylphenyl ether	ug/kg	ND	330	
4-Nitroaniline	ug/kg	ND	660	
4-Nitrophenol	ug/kg	ND	1650	
Acenaphthene	ug/kg	ND	330	
Acenaphthylene	ug/kg	ND	330	
Aniline	ug/kg	ND	330	
Anthracene	ug/kg	ND	330	
Benzo(a)anthracene	ug/kg	ND	330	
Benzo(a)pyrene	ug/kg	ND	330	
Benzo(b)fluoranthene	ug/kg	ND	330	
Benzo(g,h,i)perylene	ug/kg	ND	330	
Benzo(k)fluoranthene	ug/kg	ND	330	
Benzoic acid	ug/kg	ND	1650	
Benzyl alcohol	ug/kg	ND	660	
bis(2-Chloroethoxy)methane	ug/kg	ND	330	
bis(2-Chloroethyl) ether	ug/kg	ND	330	
bis(2-Chloroisopropyl) ether	ug/kg	ND	330	

This report shall not be reproduced, except in full,
without the written consent of Pace Analytical Services, Inc..

ACCREDITED IN ACCORDANCE WITH nelac

Pace Analytical®
www.pacelabs.com

Pace Analytical Services, Inc.
2225 Riverside Dr.
Asheville, NC 28804
(828)254-7176

Pace Analytical Services, Inc.
9800 Kincey Ave. Suite 100
Huntersville, NC 28078
(704)875-9092

QUALITY CONTROL DATA

Project: CHARLOTTE PIPE & FOUNDRY/UST
Pace Project No.: 9220762

METHOD BLANK: 124670

Associated Lab Samples: 9220762002, 9220762003, 9220762004, 9220762005

Parameter	Units	Blank Result	Reporting Limit	Qualifiers
bis(2-Ethylhexyl)phthalate	ug/kg	ND	330	
Butylbenzylphthalate	ug/kg	ND	330	
Chrysene	ug/kg	ND	330	
Di-n-butylphthalate	ug/kg	ND	330	
Di-n-octylphthalate	ug/kg	ND	330	
Dibenz(a,h)anthracene	ug/kg	ND	330	
Dibenzofuran	ug/kg	ND	330	
Diethylphthalate	ug/kg	ND	330	
Dimethylphthalate	ug/kg	ND	330	
Fluoranthene	ug/kg	ND	330	
Fluorene	ug/kg	ND	330	
Hexachloro-1,3-butadiene	ug/kg	ND	330	
Hexachlorobenzene	ug/kg	ND	330	
Hexachlorocyclopentadiene	ug/kg	ND	330	
Hexachloroethane	ug/kg	ND	330	
Indeno(1,2,3-cd)pyrene	ug/kg	ND	330	
Isophorone	ug/kg	ND	330	
N-Nitroso-di-n-propylamine	ug/kg	ND	330	
N-Nitrosodimethylamine	ug/kg	ND	330	
N-Nitrosodiphenylamine	ug/kg	ND	330	
Naphthalene	ug/kg	ND	330	
Nitrobenzene	ug/kg	ND	330	
Pentachlorophenol	ug/kg	ND	1650	
Phenanthrene	ug/kg	ND	330	
Phenol	ug/kg	ND	330	
Pyrene	ug/kg	ND	330	
2,4,6-Tribromophenol (S)	%	73	30-150	
2-Fluorobiphenyl (S)	%	64	30-150	
2-Fluorophenol (S)	%	77	30-150	
Nitrobenzene-d5 (S)	%	66	30-150	
Phenol-d6 (S)	%	63	30-150	
Terphenyl-d14 (S)	%	79	30-150	

LABORATORY CONTROL SAMPLE: 124671

Parameter	Units	Spike Conc.	LCS Result	LCS % Rec	% Rec Limits	Qualifiers
1,2,4-Trichlorobenzene	ug/kg	1670	900	54	50-150	
1,2-Dichlorobenzene	ug/kg	1670	878	53	50-150	
1,2-Diphenylhydrazine	ug/kg	1670	772	46	50-150	
1,3-Dichlorobenzene	ug/kg	1670	862	52	50-150	
1,4-Dichlorobenzene	ug/kg	1670	900	54	50-150	
1-Methylnaphthalene	ug/kg	1670	1590	95	50-150	
2,4,5-Trichlorophenol	ug/kg	1670	977	59	50-150	
2,4,6-Trichlorophenol	ug/kg	1670	1010	61	50-150	
2,4-Dichlorophenol	ug/kg	1670	1070	64	50-150	

This report shall not be reproduced, *except in full*,
without the written consent of Pace Analytical Services, Inc..

ACCREDITED IN ACCORDANCE WITH nelac

Pace Analytical®
www.pacelabs.com

Pace Analytical Services, Inc.
2225 Riverside Dr.
Asheville, NC 28804
(828)254-7176

Pace Analytical Services, Inc.
9800 Kincey Ave. Suite 100
Huntersville, NC 28078
(704)875-9092

QUALITY CONTROL DATA

Project: CHARLOTTE PIPE & FOUNDRY/UST
Pace Project No.: 9220762

LABORATORY CONTROL SAMPLE: 124671

Parameter	Units	Spike Conc.	LCS Result	LCS % Rec	% Rec Limits	Qualifiers
2,4-Dimethylphenol	ug/kg	1670	868	52	50-150	
2,4-Dinitrophenol	ug/kg	1670	775J	47	50-150	
2,4-Dinitrotoluene	ug/kg	1670	1040	62	50-150	
2,6-Dinitrotoluene	ug/kg	1670	1080	65	50-150	
2-Chloronaphthalene	ug/kg	1670	930	56	50-150	
2-Chlorophenol	ug/kg	1670	1000	60	50-150	
2-Methylnaphthalene	ug/kg	1670	1050	63	50-150	
2-Methylphenol(o-Cresol)	ug/kg	1670	816	49	50-150	
2-Nitroaniline	ug/kg	1670	1220J	73	50-150	
2-Nitrophenol	ug/kg	1670	1020	61	50-150	
3&4-Methylphenol(m&p Cresol)	ug/kg	1670	1080	65	50-150	
3,3'-Dichlorobenzidine	ug/kg	1670	1410J	85	50-150	
3-Nitroaniline	ug/kg	1670	1580J	95	50-150	
4,6-Dinitro-2-methylphenol	ug/kg	1670	975	59	50-150	
4-Bromophenylphenyl ether	ug/kg	1670	1190	71	50-150	
4-Chloro-3-methylphenol	ug/kg	1670	916	55	50-150	
4-Chloroaniline	ug/kg	1670	1440J	86	50-150	
4-Chlorophenylphenyl ether	ug/kg	1670	1130	68	50-150	
4-Nitroaniline	ug/kg	1670	1150	69	50-150	
4-Nitrophenol	ug/kg	1670	994J	60	50-150	
Acenaphthene	ug/kg	1670	1100	66	50-150	
Acenaphthylene	ug/kg	1670	1150	69	50-150	
Aniline	ug/kg	1670	1110	67	50-150	
Anthracene	ug/kg	1670	1100	66	50-150	
Benzo(a)anthracene	ug/kg	1670	1060	63	50-150	
Benzo(a)pyrene	ug/kg	1670	1260	76	50-150	
Benzo(b)fluoranthene	ug/kg	1670	1020	61	50-150	
Benzo(g,h,i)perylene	ug/kg	1670	1210	73	50-150	
Benzo(k)fluoranthene	ug/kg	1670	1430	86	50-150	
Benzoic acid	ug/kg	1670	630J	38	50-150	
Benzyl alcohol	ug/kg	1670	508J	30	50-150	
bis(2-Chloroethoxy)methane	ug/kg	1670	1080	65	50-150	
bis(2-Chloroethyl) ether	ug/kg	1670	904	54	50-150	
bis(2-Chloroisopropyl) ether	ug/kg	1670	1090	66	50-150	
bis(2-Ethylhexyl)phthalate	ug/kg	1670	1240	74	50-150	
Butylbenzylphthalate	ug/kg	1670	1230	74	50-150	
Chrysene	ug/kg	1670	1180	71	50-150	
Di-n-butylphthalate	ug/kg	1670	1210	72	50-150	
Di-n-octylphthalate	ug/kg	1670	1240	75	50-150	
Dibenz(a,h)anthracene	ug/kg	1670	1210	73	50-150	
Dibenzofuran	ug/kg	1670	992	60	50-150	
Diethylphthalate	ug/kg	1670	1250	75	50-150	
Dimethylphthalate	ug/kg	1670	1210	72	50-150	
Fluoranthene	ug/kg	1670	1100	66	50-150	
Fluorene	ug/kg	1670	1110	67	50-150	
Hexachloro-1,3-butadiene	ug/kg	1670	899	54	50-150	
Hexachlorobenzene	ug/kg	1670	1020	61	50-150	
Hexachlorocyclopentadiene	ug/kg	1670	647	39	50-150	

This report shall not be reproduced, except in full,
without the written consent of Pace Analytical Services, Inc..

ACCREDITED IN ACCORDANCE WITH nelac

Pace Analytical®
www.pacelabs.com

Pace Analytical Services, Inc.
2225 Riverside Dr.
Asheville, NC 28804
(828)254-7176

Pace Analytical Services, Inc.
9800 Kincey Ave. Suite 100
Huntersville, NC 28078
(704)875-9092

QUALITY CONTROL DATA

Project: CHARLOTTE PIPE & FOUNDRY/UST
Pace Project No.: 9220762

LABORATORY CONTROL SAMPLE: 124671

Parameter	Units	Spike Conc.	LCS Result	LCS % Rec	% Rec Limits	Qualifiers
Hexachloroethane	ug/kg	1670	914	55	50-150	
Indeno(1,2,3-cd)pyrene	ug/kg	1670	1160	70	50-150	
Isophorone	ug/kg	1670	1800	108	50-150	
N-Nitroso-di-n-propylamine	ug/kg	1670	1060	64	50-150	
N-Nitrosodimethylamine	ug/kg	1670	1030	62	50-150	
N-Nitrosodiphenylamine	ug/kg	1670	1230	74	50-150	
Naphthalene	ug/kg	1670	954	57	50-150	
Nitrobenzene	ug/kg	1670	931	56	50-150	
Pentachlorophenol	ug/kg	1670	1030J	62	50-150	
Phenanthrene	ug/kg	1670	1110	66	50-150	
Phenol	ug/kg	1670	1080	65	50-150	
Pyrene	ug/kg	1670	1120	67	50-150	
2,4,6-Tribromophenol (S)	%			66	30-150	
2-Fluorobiphenyl (S)	%			65	30-150	
2-Fluorophenol (S)	%			66	30-150	
Nitrobenzene-d5 (S)	%			67	30-150	
Phenol-d6 (S)	%			66	30-150	
Terphenyl-d14 (S)	%			73	30-150	

This report shall not be reproduced, except in full,
without the written consent of Pace Analytical Services, Inc..

ACCREDITED IN ACCORDANCE WITH nelac

Pace Analytical®
www.pacelabs.com

Pace Analytical Services, Inc.
2225 Riverside Dr.
Asheville, NC 28804
(828)254-7176

Pace Analytical Services, Inc.
9800 Kincey Ave. Suite 100
Huntersville, NC 28078
(704)875-9092

QUALITY CONTROL DATA

Project: CHARLOTTE PIPE & FOUNDRY/UST
Pace Project No.: 9220762

QC Batch: MSV/3651 | Analysis Method: EPA 8260
QC Batch Method: EPA 8260 | Analysis Description: 8260 MSV 5035A Volatile Organics
Associated Lab Samples: 9220762001, 9220762002, 9220762003

METHOD BLANK: 124791
Associated Lab Samples: 9220762001, 9220762002, 9220762003

Parameter	Units	Blank Result	Reporting Limit	Qualifiers
1,1,1,2-Tetrachloroethane	ug/kg	ND	5.0	
1,1,1-Trichloroethane	ug/kg	ND	5.0	
1,1,2,2-Tetrachloroethane	ug/kg	ND	5.0	
1,1,2-Trichloroethane	ug/kg	ND	5.0	
1,1-Dichloroethane	ug/kg	ND	5.0	
1,1-Dichloroethene	ug/kg	ND	5.0	
1,1-Dichloropropene	ug/kg	ND	5.0	
1,2,3-Trichlorobenzene	ug/kg	ND	5.0	
1,2,3-Trichloropropane	ug/kg	ND	5.0	
1,2,4-Trichlorobenzene	ug/kg	ND	5.0	
1,2,4-Trimethylbenzene	ug/kg	ND	5.0	
1,2-Dibromo-3-chloropropane	ug/kg	ND	5.0	
1,2-Dibromoethane (EDB)	ug/kg	ND	5.0	
1,2-Dichlorobenzene	ug/kg	ND	5.0	
1,2-Dichloroethane	ug/kg	ND	5.0	
1,2-Dichloropropane	ug/kg	ND	5.0	
1,3,5-Trimethylbenzene	ug/kg	ND	5.0	
1,3-Dichlorobenzene	ug/kg	ND	5.0	
1,3-Dichloropropane	ug/kg	ND	5.0	
1,4-Dichlorobenzene	ug/kg	ND	5.0	
2,2-Dichloropropane	ug/kg	ND	5.0	
2-Butanone (MEK)	ug/kg	ND	100	
2-Chlorotoluene	ug/kg	ND	5.0	
2-Hexanone	ug/kg	ND	50.0	
4-Chlorotoluene	ug/kg	ND	5.0	
4-Methyl-2-pentanone (MIBK)	ug/kg	ND	50.0	
Acetone	ug/kg	ND	100	
Benzene	ug/kg	ND	5.0	
Bromobenzene	ug/kg	ND	5.0	
Bromochloromethane	ug/kg	ND	5.0	
Bromodichloromethane	ug/kg	ND	5.0	
Bromoform	ug/kg	ND	5.0	
Bromomethane	ug/kg	ND	10.0	
Carbon tetrachloride	ug/kg	ND	5.0	
Chlorobenzene	ug/kg	ND	5.0	
Chloroethane	ug/kg	ND	10.0	
Chloroform	ug/kg	ND	5.0	
Chloromethane	ug/kg	ND	10.0	
cis-1,2-Dichloroethene	ug/kg	ND	5.0	
cis-1,3-Dichloropropene	ug/kg	ND	5.0	
Dibromochloromethane	ug/kg	ND	5.0	
Dibromomethane	ug/kg	ND	5.0	
Dichlorodifluoromethane	ug/kg	ND	10.0	

This report shall not be reproduced, except in full,
without the written consent of Pace Analytical Services, Inc..

ACCREDITED IN ACCORDANCE WITH nelac

Pace Analytical®
www.pacelabs.com

Pace Analytical Services, Inc.
2225 Riverside Dr.
Asheville, NC 28804
(828)254-7176

Pace Analytical Services, Inc.
9800 Kincey Ave. Suite 100
Huntersville, NC 28078
(704)875-9092

QUALITY CONTROL DATA

Project: CHARLOTTE PIPE & FOUNDRY/UST
Pace Project No.: 9220762

METHOD BLANK: 124791

Associated Lab Samples: 9220762001, 9220762002, 9220762003

Parameter	Units	Blank Result	Reporting Limit	Qualifiers
Diisopropyl ether	ug/kg	ND	5.0	
Ethylbenzene	ug/kg	ND	5.0	
Hexachloro-1,3-butadiene	ug/kg	ND	5.0	
Isopropylbenzene (Cumene)	ug/kg	ND	5.0	
m&p-Xylene	ug/kg	ND	10.0	
Methyl-tert-butyl ether	ug/kg	ND	5.0	
Methylene Chloride	ug/kg	ND	5.0	
n-Butylbenzene	ug/kg	ND	5.0	
n-Propylbenzene	ug/kg	ND	5.0	
Naphthalene	ug/kg	ND	5.0	
o-Xylene	ug/kg	ND	5.0	
p-Isopropyltoluene	ug/kg	ND	5.0	
sec-Butylbenzene	ug/kg	ND	5.0	
Styrene	ug/kg	ND	5.0	
tert-Butylbenzene	ug/kg	ND	5.0	
Tetrachloroethene	ug/kg	ND	5.0	
Toluene	ug/kg	ND	5.0	
trans-1,2-Dichloroethene	ug/kg	ND	5.0	
trans-1,3-Dichloropropene	ug/kg	ND	5.0	
Trichloroethene	ug/kg	ND	5.0	
Trichlorofluoromethane	ug/kg	ND	5.0	
Vinyl acetate	ug/kg	ND	50.0	
Vinyl chloride	ug/kg	ND	10.0	
Xylene (Total)	ug/kg	ND	15.0	
1,2-Dichloroethane-d4 (S)	%	104	69-121	
4-Bromofluorobenzene (S)	%	100	74-115	
Dibromofluoromethane (S)	%	108	79-116	
Toluene-d8 (S)	%	113	88-110	S0

LABORATORY CONTROL SAMPLE: 124792

Parameter	Units	Spike Conc.	LCS Result	LCS % Rec	% Rec Limits	Qualifiers
1,1,1,2-Tetrachloroethane	ug/kg	50	57.4	115	75-137	
1,1,1-Trichloroethane	ug/kg	50	58.5	117	70-140	
1,1,2,2-Tetrachloroethane	ug/kg	50	53.9	108	74-133	
1,1,2-Trichloroethane	ug/kg	50	56.5	113	79-129	
1,1-Dichloroethane	ug/kg	50	58.0	116	72-139	
1,1-Dichloroethene	ug/kg	50	51.6	103	69-154	
1,1-Dichloropropene	ug/kg	50	57.6	115	74-138	
1,2,3-Trichlorobenzene	ug/kg	50	49.9	100	71-150	
1,2,3-Trichloropropane	ug/kg	50	54.2	108	74-135	
1,2,4-Trichlorobenzene	ug/kg	50	45.3	91	68-150	
1,2,4-Trimethylbenzene	ug/kg	50	53.3	107	70-130	
1,2-Dibromo-3-chloropropane	ug/kg	50	56.8	114	65-146	
1,2-Dibromoethane (EDB)	ug/kg	50	57.5	115	77-136	

This report shall not be reproduced, except in full,
without the written consent of Pace Analytical Services, Inc..

ACCREDITED IN ACCORDANCE WITH nelac

Pace Analytical®
www.pacelabs.com

Pace Analytical Services, Inc.
2225 Riverside Dr.
Asheville, NC 28804
(828)254-7176

Pace Analytical Services, Inc.
9800 Kincey Ave. Suite 100
Huntersville, NC 28078
(704)875-9092

QUALITY CONTROL DATA

Project: CHARLOTTE PIPE & FOUNDRY/UST
Pace Project No.: 9220762

LABORATORY CONTROL SAMPLE: 124792

Parameter	Units	Spike Conc.	LCS Result	LCS % Rec	% Rec Limits	Qualifiers
1,2-Dichlorobenzene	ug/kg	50	54.0	108	75-141	
1,2-Dichloroethane	ug/kg	50	60.0	120	74-134	
1,2-Dichloropropane	ug/kg	50	58.7	117	77-138	
1,3,5-Trimethylbenzene	ug/kg	50	54.9	110	65-128	
1,3-Dichlorobenzene	ug/kg	50	49.8	100	76-133	
1,3-Dichloropropane	ug/kg	50	56.9	114	79-132	
1,4-Dichlorobenzene	ug/kg	50	51.1	102	75-137	
2,2-Dichloropropane	ug/kg	50	52.6	105	73-137	
2-Butanone (MEK)	ug/kg	100	114	114	61-138	
2-Chlorotoluene	ug/kg	50	52.9	106	73-138	
2-Hexanone	ug/kg	100	118	118	58-159	
4-Chlorotoluene	ug/kg	50	52.6	105	75-136	
4-Methyl-2-pentanone (MIBK)	ug/kg	100	120	120	74-139	
Acetone	ug/kg	100	125	125	58-150	
Benzene	ug/kg	50	56.5	113	71-140	
Bromobenzene	ug/kg	50	53.2	106	72-144	
Bromochloromethane	ug/kg	50	54.2	108	78-133	
Bromodichloromethane	ug/kg	50	58.4	117	78-133	
Bromoform	ug/kg	50	58.8	118	74-132	
Bromomethane	ug/kg	50	59.8	120	63-184	
Carbon tetrachloride	ug/kg	50	58.2	116	73-143	
Chlorobenzene	ug/kg	50	53.5	107	77-137	
Chloroethane	ug/kg	50	58.6	117	68-146	
Chloroform	ug/kg	50	61.6	123	75-137	
Chloromethane	ug/kg	50	57.2	114	54-143	
cis-1,2-Dichloroethene	ug/kg	50	57.0	114	71-143	
cis-1,3-Dichloropropene	ug/kg	50	57.4	115	76-133	
Dibromochloromethane	ug/kg	50	57.7	115	77-131	
Dibromomethane	ug/kg	50	56.5	113	63-184	
Dichlorodifluoromethane	ug/kg	50	63.9	128	36-173	
Diisopropyl ether	ug/kg	50	65.9	132	68-144	
Ethylbenzene	ug/kg	50	54.0	108	69-141	
Hexachloro-1,3-butadiene	ug/kg	50	53.7	107	70-152	
Isopropylbenzene (Cumene)	ug/kg	50	54.2	108	77-143	
m&p-Xylene	ug/kg	100	106	106	72-138	
Methyl-tert-butyl ether	ug/kg	50	64.4	129	2-138	
Methylene Chloride	ug/kg	50	51.6	103	69-136	
n-Butylbenzene	ug/kg	50	49.9	100	65-128	
n-Propylbenzene	ug/kg	50	51.7	103	72-139	
Naphthalene	ug/kg	50	56.6	113	61-138	
o-Xylene	ug/kg	50	52.9	106	74-137	
p-Isopropyltoluene	ug/kg	50	52.2	104	66-128	
sec-Butylbenzene	ug/kg	50	53.5	107	72-140	
Styrene	ug/kg	50	54.0	108	76-137	
tert-Butylbenzene	ug/kg	50	55.6	111	68-141	
Tetrachloroethene	ug/kg	50	51.6	103	72-136	
Toluene	ug/kg	50	53.7	107	69-139	
trans-1,2-Dichloroethene	ug/kg	50	51.6	103	72-144	

This report shall not be reproduced, except in full,
without the written consent of Pace Analytical Services, Inc..

ACCREDITED IN ACCORDANCE WITH nelac

Pace Analytical®
www.pacelabs.com

Pace Analytical Services, Inc.
2225 Riverside Dr.
Asheville, NC 28804
(828)254-7176

Pace Analytical Services, Inc.
9800 Kincey Ave. Suite 100
Huntersville, NC 28078
(704)875-9092

QUALITY CONTROL DATA

Project: CHARLOTTE PIPE & FOUNDRY/UST
Pace Project No.: 9220762

LABORATORY CONTROL SAMPLE: 124792

Parameter	Units	Spike Conc.	LCS Result	LCS % Rec	% Rec Limits	Qualifiers
trans-1,3-Dichloropropene	ug/kg	50	58.5	117	73-135	
Trichloroethene	ug/kg	50	56.3	113	75-136	
Trichlorofluoromethane	ug/kg	50	60.9	122	69-144	
Vinyl acetate	ug/kg	100	51.5	52	50-150	
Vinyl chloride	ug/kg	50	68.1	136	61-145	
Xylene (Total)	ug/kg	150	159	106	73-138	
1,2-Dichloroethane-d4 (S)	%			102	69-121	
4-Bromofluorobenzene (S)	%			99	74-115	
Dibromofluoromethane (S)	%			105	79-116	
Toluene-d8 (S)	%			99	88-110	

MATRIX SPIKE SAMPLE: 125443

Parameter	Units	9220376001 Result	Spike Conc.	MS Result	MS % Rec	% Rec Limits	Qualifiers
1,1-Dichloroethene	ug/kg	ND	136	154	113	33-158	
Benzene	ug/kg	ND	136	155	114	46-143	
Chlorobenzene	ug/kg	ND	136	146	107	29-159	
Toluene	ug/kg	ND	136	154	113	38-145	
Trichloroethene	ug/kg	ND	136	153	113	70-130	
1,2-Dichloroethane-d4 (S)	%				111	69-121	
4-Bromofluorobenzene (S)	%				102	74-115	
Dibromofluoromethane (S)	%				111	79-116	
Toluene-d8 (S)	%				104	88-110	

SAMPLE DUPLICATE: 125442

Parameter	Units	9220582001 Result	Dup Result	RPD	Qualifiers
1,1,1,2-Tetrachloroethane	ug/kg	ND	ND	0	
1,1,1-Trichloroethane	ug/kg	ND	ND	0	
1,1,2,2-Tetrachloroethane	ug/kg	ND	ND	0	
1,1,2-Trichloroethane	ug/kg	ND	ND	0	
1,1-Dichloroethane	ug/kg	ND	ND	0	
1,1-Dichloroethene	ug/kg	ND	ND	0	
1,1-Dichloropropene	ug/kg	ND	ND	0	
1,2,3-Trichlorobenzene	ug/kg	ND	ND	0	
1,2,3-Trichloropropane	ug/kg	ND	ND	0	
1,2,4-Trichlorobenzene	ug/kg	ND	ND	0	
1,2,4-Trimethylbenzene	ug/kg	ND	ND	0	
1,2-Dibromo-3-chloropropane	ug/kg	ND	ND	0	
1,2-Dibromoethane (EDB)	ug/kg	ND	ND	0	
1,2-Dichlorobenzene	ug/kg	ND	ND	0	
1,2-Dichloroethane	ug/kg	ND	ND	0	
1,2-Dichloropropane	ug/kg	ND	ND	0	
1,3,5-Trimethylbenzene	ug/kg	ND	ND	0	
1,3-Dichlorobenzene	ug/kg	ND	ND	0	

This report shall not be reproduced, except in full,
without the written consent of Pace Analytical Services, Inc..

ACCREDITED IN ACCORDANCE WITH nelac

Pace Analytical®
www.pacelabs.com

Pace Analytical Services, Inc.
2225 Riverside Dr.
Asheville, NC 28804
(828)254-7176

Pace Analytical Services, Inc.
9800 Kincey Ave. Suite 100
Huntersville, NC 28078
(704)875-9092

QUALITY CONTROL DATA

Project: CHARLOTTE PIPE & FOUNDRY/UST
Pace Project No.: 9220762

SAMPLE DUPLICATE: 125442

Parameter	Units	9220582001 Result	Dup Result	RPD	Qualifiers
1,3-Dichloropropane	ug/kg	ND	ND	0	
1,4-Dichlorobenzene	ug/kg	ND	ND	0	
2,2-Dichloropropane	ug/kg	ND	ND	0	
2-Butanone (MEK)	ug/kg	ND	ND	0	
2-Chlorotoluene	ug/kg	ND	ND	0	
2-Hexanone	ug/kg	ND	ND	0	
4-Chlorotoluene	ug/kg	ND	ND	0	
4-Methyl-2-pentanone (MIBK)	ug/kg	ND	ND	0	
Acetone	ug/kg	ND	ND	62	
Benzene	ug/kg	ND	ND	0	
Bromobenzene	ug/kg	ND	ND	0	
Bromochloromethane	ug/kg	ND	ND	0	
Bromodichloromethane	ug/kg	ND	ND	0	
Bromoform	ug/kg	ND	ND	0	
Bromomethane	ug/kg	ND	ND	0	
Carbon tetrachloride	ug/kg	ND	ND	0	
Chlorobenzene	ug/kg	ND	ND	0	
Chloroethane	ug/kg	ND	ND	0	
Chloroform	ug/kg	ND	ND	0	
Chloromethane	ug/kg	ND	ND	0	
cis-1,2-Dichloroethene	ug/kg	ND	ND	0	
cis-1,3-Dichloropropene	ug/kg	ND	ND	0	
Dibromochloromethane	ug/kg	ND	ND	0	
Dibromomethane	ug/kg	ND	ND	0	
Dichlorodifluoromethane	ug/kg	ND	ND	0	
Diisopropyl ether	ug/kg	ND	ND	0	
Ethylbenzene	ug/kg	ND	ND	0	
Hexachloro-1,3-butadiene	ug/kg	ND	ND	0	
Isopropylbenzene (Cumene)	ug/kg	ND	ND	0	
m&p-Xylene	ug/kg	ND	ND	0	
Methyl-tert-butyl ether	ug/kg	ND	ND	0	
Methylene Chloride	ug/kg	ND	ND	0	
n-Butylbenzene	ug/kg	ND	ND	0	
n-Propylbenzene	ug/kg	ND	ND	0	
Naphthalene	ug/kg	ND	ND	0	
o-Xylene	ug/kg	ND	ND	0	
p-Isopropyltoluene	ug/kg	ND	ND	0	
sec-Butylbenzene	ug/kg	ND	ND	0	
Styrene	ug/kg	ND	ND	0	
tert-Butylbenzene	ug/kg	ND	ND	0	
Tetrachloroethene	ug/kg	ND	ND	0	
Toluene	ug/kg	ND	ND	0	
trans-1,2-Dichloroethene	ug/kg	ND	ND	0	
trans-1,3-Dichloropropene	ug/kg	ND	ND	0	
Trichloroethene	ug/kg	ND	ND	0	
Trichlorofluoromethane	ug/kg	ND	ND	0	
Vinyl acetate	ug/kg	ND	ND	0	
Vinyl chloride	ug/kg	ND	ND	0	

This report shall not be reproduced, except in full,
without the written consent of Pace Analytical Services, Inc..

ACCREDITED IN ACCORDANCE WITH nelac

Pace Analytical Services, Inc.
2225 Riverside Dr.
Asheville, NC 28804
(828)254-7176

Pace Analytical Services, Inc.
9800 Kincey Ave. Suite 100
Huntersville, NC 28078
(704)875-9092

QUALITY CONTROL DATA

Project: CHARLOTTE PIPE & FOUNDRY/UST
Pace Project No.: 9220762

SAMPLE DUPLICATE: 125442

Parameter	Units	9220582001 Result	Dup Result	RPD	Qualifiers
Xylene (Total)	ug/kg	ND	ND	2	
1,2-Dichloroethane-d4 (S)	%	113	110	5	
4-Bromofluorobenzene (S)	%	98	93	6	
Dibromofluoromethane (S)	%	111	107	5	
Toluene-d8 (S)	%	111	105	8	

This report shall not be reproduced, except in full,
without the written consent of Pace Analytical Services, Inc..

Pace Analytical®
www.pacelabs.com

Pace Analytical Services, Inc.
2225 Riverside Dr.
Asheville, NC 28804
(828)254-7176

Pace Analytical Services, Inc.
9800 Kincey Ave. Suite 100
Huntersville, NC 28078
(704)875-9092

QUALITY CONTROL DATA

Project: CHARLOTTE PIPE & FOUNDRY/UST
Pace Project No.: 9220762

QC Batch: GCV/2140 Analysis Method: MADEP VPH
QC Batch Method: MADEP VPH Analysis Description: VPH NC Soil
Associated Lab Samples: 9220762001, 9220762002, 9220762003, 9220762004, 9220762005

METHOD BLANK: 124857
Associated Lab Samples: 9220762001, 9220762002, 9220762003, 9220762004, 9220762005

Parameter	Units	Blank Result	Reporting Limit	Qualifiers
Aliphatic (C05-C08)	mg/kg	ND	10.0	
Aliphatic (C09-C12)	mg/kg	ND	10.0	
Aromatic (C09-C10)	mg/kg	ND	10.0	
2,5-Dibromotoluene (FID)(S)	%	112	70-130	
2,5-Dibromotoluene (PID)(S)	%	115	70-130	

LABORATORY CONTROL SAMPLE & LCSD: 124858 124859

Parameter	Units	Spike Conc.	LCS Result	LCSD Result	LCS % Rec	LCSD % Rec	% Rec Limits	RPD	Max RPD	Qualifiers
Aliphatic (C05-C08)	mg/kg	15	13.7	13.9	91	93	70-130	2	25	
Aliphatic (C09-C12)	mg/kg	15	13.6	14.2	91	95	30-130	4	25	
Aromatic (C09-C10)	mg/kg	5	ND	ND	115	116	70-130	.4	25	
2,5-Dibromotoluene (FID)(S)	%				106	108	70-130			
2,5-Dibromotoluene (PID)(S)	%				112	114	70-130			

This report shall not be reproduced, except in full,
without the written consent of Pace Analytical Services, Inc..

ACCREDITED IN ACCORDANCE WITH nelac

Pace Analytical®
www.pacelabs.com

Pace Analytical Services, Inc.
2225 Riverside Dr.
Asheville, NC 28804
(828)254-7176

Pace Analytical Services, Inc.
9800 Kincey Ave. Suite 100
Huntersville, NC 28078
(704)875-9092

QUALITY CONTROL DATA

Project: CHARLOTTE PIPE & FOUNDRY/UST
Pace Project No.: 9220762

QC Batch: MSV/3670 | Analysis Method: EPA 8260
QC Batch Method: EPA 8260 | Analysis Description: 8260 MSV 5035A Volatile Organics
Associated Lab Samples: 9220762004, 9220762005

METHOD BLANK: 125438
Associated Lab Samples: 9220762004, 9220762005

Parameter	Units	Blank Result	Reporting Limit	Qualifiers
1,1,1,2-Tetrachloroethane	ug/kg	ND	4.8	
1,1,1-Trichloroethane	ug/kg	ND	4.8	
1,1,2,2-Tetrachloroethane	ug/kg	ND	4.8	
1,1,2-Trichloroethane	ug/kg	ND	4.8	
1,1-Dichloroethane	ug/kg	ND	4.8	
1,1-Dichloroethene	ug/kg	ND	4.8	
1,1-Dichloropropene	ug/kg	ND	4.8	
1,2,3-Trichlorobenzene	ug/kg	ND	4.8	
1,2,3-Trichloropropane	ug/kg	ND	4.8	
1,2,4-Trichlorobenzene	ug/kg	ND	4.8	
1,2,4-Trimethylbenzene	ug/kg	ND	4.8	
1,2-Dibromo-3-chloropropane	ug/kg	ND	4.8	
1,2-Dibromoethane (EDB)	ug/kg	ND	4.8	
1,2-Dichlorobenzene	ug/kg	ND	4.8	
1,2-Dichloroethane	ug/kg	ND	4.8	
1,2-Dichloropropane	ug/kg	ND	4.8	
1,3,5-Trimethylbenzene	ug/kg	ND	4.8	
1,3-Dichlorobenzene	ug/kg	ND	4.8	
1,3-Dichloropropane	ug/kg	ND	4.8	
1,4-Dichlorobenzene	ug/kg	ND	4.8	
2,2-Dichloropropane	ug/kg	ND	4.8	
2-Butanone (MEK)	ug/kg	ND	96.2	
2-Chlorotoluene	ug/kg	ND	4.8	
2-Hexanone	ug/kg	ND	48.1	
4-Chlorotoluene	ug/kg	ND	4.8	
4-Methyl-2-pentanone (MIBK)	ug/kg	ND	48.1	
Acetone	ug/kg	ND	96.2	
Benzene	ug/kg	ND	4.8	
Bromobenzene	ug/kg	ND	4.8	
Bromochloromethane	ug/kg	ND	4.8	
Bromodichloromethane	ug/kg	ND	4.8	
Bromoform	ug/kg	ND	4.8	
Bromomethane	ug/kg	ND	9.6	
Carbon tetrachloride	ug/kg	ND	4.8	
Chlorobenzene	ug/kg	ND	4.8	
Chloroethane	ug/kg	ND	9.6	
Chloroform	ug/kg	ND	4.8	
Chloromethane	ug/kg	ND	9.6	
cis-1,2-Dichloroethene	ug/kg	ND	4.8	
cis-1,3-Dichloropropene	ug/kg	ND	4.8	
Dibromochloromethane	ug/kg	ND	4.8	
Dibromomethane	ug/kg	ND	4.8	
Dichlorodifluoromethane	ug/kg	ND	9.6	

This report shall not be reproduced, except in full,
without the written consent of Pace Analytical Services, Inc..

ACCREDITED IN ACCORDANCE WITH nelac

Pace Analytical®
www.pacelabs.com

Pace Analytical Services, Inc.
2225 Riverside Dr.
Asheville, NC 28804
(828)254-7176

Pace Analytical Services, Inc.
9800 Kincey Ave. Suite 100
Huntersville, NC 28078
(704)875-9092

QUALITY CONTROL DATA

Project: CHARLOTTE PIPE & FOUNDRY/UST
Pace Project No.: 9220762

METHOD BLANK: 125438

Associated Lab Samples: 9220762004, 9220762005

Parameter	Units	Blank Result	Reporting Limit	Qualifiers
Diisopropyl ether	ug/kg	ND	4.8	
Ethylbenzene	ug/kg	ND	4.8	
Hexachloro-1,3-butadiene	ug/kg	ND	4.8	
Isopropylbenzene (Cumene)	ug/kg	ND	4.8	
m&p-Xylene	ug/kg	ND	9.6	
Methyl-tert-butyl ether	ug/kg	ND	4.8	
Methylene Chloride	ug/kg	4.9	4.8	B-
n-Butylbenzene	ug/kg	ND	4.8	
n-Propylbenzene	ug/kg	ND	4.8	
Naphthalene	ug/kg	ND	4.8	
o-Xylene	ug/kg	ND	4.8	
p-Isopropyltoluene	ug/kg	ND	4.8	
sec-Butylbenzene	ug/kg	ND	4.8	
Styrene	ug/kg	ND	4.8	
tert-Butylbenzene	ug/kg	ND	4.8	
Tetrachloroethene	ug/kg	ND	4.8	
Toluene	ug/kg	ND	4.8	
trans-1,2-Dichloroethene	ug/kg	ND	4.8	
trans-1,3-Dichloropropene	ug/kg	ND	4.8	
Trichloroethene	ug/kg	ND	4.8	
Trichlorofluoromethane	ug/kg	ND	4.8	
Vinyl acetate	ug/kg	ND	48.1	
Vinyl chloride	ug/kg	ND	9.6	
Xylene (Total)	ug/kg	ND	14.4	
1,2-Dichloroethane-d4 (S)	%	87	69-121	
4-Bromofluorobenzene (S)	%	91	74-115	
Dibromofluoromethane (S)	%	94	79-116	
Toluene-d8 (S)	%	102	88-110	

LABORATORY CONTROL SAMPLE: 125439

Parameter	Units	Spike Conc.	LCS Result	LCS % Rec	% Rec Limits	Qualifiers
1,1,1,2-Tetrachloroethane	ug/kg	50	51.6	103	75-137	
1,1,1-Trichloroethane	ug/kg	50	54.8	110	70-140	
1,1,2,2-Tetrachloroethane	ug/kg	50	49.9	100	74-133	
1,1,2-Trichloroethane	ug/kg	50	51.3	103	79-129	
1,1-Dichloroethane	ug/kg	50	54.9	110	72-139	
1,1-Dichloroethene	ug/kg	50	49.8	100	69-154	
1,1-Dichloropropene	ug/kg	50	55.8	112	74-138	
1,2,3-Trichlorobenzene	ug/kg	50	54.1	108	71-150	
1,2,3-Trichloropropane	ug/kg	50	52.0	104	74-135	
1,2,4-Trichlorobenzene	ug/kg	50	52.0	104	68-150	
1,2,4-Trimethylbenzene	ug/kg	50	52.4	105	70-130	
1,2-Dibromo-3-chloropropane	ug/kg	50	54.5	109	65-146	
1,2-Dibromoethane (EDB)	ug/kg	50	54.5	109	77-136	

This report shall not be reproduced, except in full,
without the written consent of Pace Analytical Services, Inc..

ACCREDITED IN ACCORDANCE WITH nelac

Pace Analytical®
www.pacelabs.com

Pace Analytical Services, Inc.
2225 Riverside Dr.
Asheville, NC 28804
(828)254-7176

Pace Analytical Services, Inc.
9800 Kincey Ave. Suite 100
Huntersville, NC 28078
(704)875-9092

QUALITY CONTROL DATA

Project: CHARLOTTE PIPE & FOUNDRY/UST
Pace Project No.: 9220762

LABORATORY CONTROL SAMPLE: 125439

Parameter	Units	Spike Conc.	LCS Result	LCS % Rec	% Rec Limits	Qualifiers
1,2-Dichlorobenzene	ug/kg	50	51.1	102	75-141	
1,2-Dichloroethane	ug/kg	50	57.1	114	74-134	
1,2-Dichloropropane	ug/kg	50	54.3	109	77-138	
1,3,5-Trimethylbenzene	ug/kg	50	51.1	102	65-128	
1,3-Dichlorobenzene	ug/kg	50	49.1	98	76-133	
1,3-Dichloropropane	ug/kg	50	53.5	107	79-132	
1,4-Dichlorobenzene	ug/kg	50	51.0	102	75-137	
2,2-Dichloropropane	ug/kg	50	56.0	112	73-137	
2-Butanone (MEK)	ug/kg	100	116	116	61-138	
2-Chlorotoluene	ug/kg	50	50.5	101	73-138	
2-Hexanone	ug/kg	100	117	117	58-159	
4-Chlorotoluene	ug/kg	50	51.7	103	75-136	
4-Methyl-2-pentanone (MIBK)	ug/kg	100	118	118	74-139	
Acetone	ug/kg	100	114	114	58-150	
Benzene	ug/kg	50	52.4	105	71-140	
Bromobenzene	ug/kg	50	49.7	99	72-144	
Bromochloromethane	ug/kg	50	52.0	104	78-133	
Bromodichloromethane	ug/kg	50	54.6	109	78-133	
Bromoform	ug/kg	50	54.1	108	74-132	
Bromomethane	ug/kg	50	63.7	127	63-184	
Carbon tetrachloride	ug/kg	50	53.0	106	73-143	
Chlorobenzene	ug/kg	50	50.9	102	77-137	
Chloroethane	ug/kg	50	57.5	115	68-146	
Chloroform	ug/kg	50	58.7	117	75-137	
Chloromethane	ug/kg	50	55.3	111	54-143	
cis-1,2-Dichloroethene	ug/kg	50	54.5	109	71-143	
cis-1,3-Dichloropropene	ug/kg	50	53.5	107	76-133	
Dibromochloromethane	ug/kg	50	53.7	107	77-131	
Dibromomethane	ug/kg	50	52.5	105	63-184	
Dichlorodifluoromethane	ug/kg	50	63.2	126	36-173	
Diisopropyl ether	ug/kg	50	61.6	123	68-144	
Ethylbenzene	ug/kg	50	51.8	104	69-141	
Hexachloro-1,3-butadiene	ug/kg	50	53.2	106	70-152	
Isopropylbenzene (Cumene)	ug/kg	50	52.0	104	77-143	
m&p-Xylene	ug/kg	100	104	104	72-138	
Methyl-tert-butyl ether	ug/kg	50	61.6	123	2-138	
Methylene Chloride	ug/kg	50	48.7	97	69-136	
n-Butylbenzene	ug/kg	50	50.6	101	65-128	
n-Propylbenzene	ug/kg	50	50.1	100	72-139	
Naphthalene	ug/kg	50	57.2	114	61-138	
o-Xylene	ug/kg	50	50.4	101	74-137	
p-Isopropyltoluene	ug/kg	50	50.5	101	66-128	
sec-Butylbenzene	ug/kg	50	51.4	103	72-140	
Styrene	ug/kg	50	52.6	105	76-137	
tert-Butylbenzene	ug/kg	50	52.3	105	68-141	
Tetrachloroethene	ug/kg	50	49.5	99	72-136	
Toluene	ug/kg	50	50.3	101	69-139	
trans-1,2-Dichloroethene	ug/kg	50	49.8	100	72-144	

This report shall not be reproduced, except in full,
without the written consent of Pace Analytical Services, Inc..

ACCREDITED IN ACCORDANCE WITH nelac

Pace Analytical
www.pacelabs.com

Pace Analytical Services, Inc.
2225 Riverside Dr.
Asheville, NC 28804
(828)254-7176

Pace Analytical Services, Inc.
9800 Kincey Ave. Suite 100
Huntersville, NC 28078
(704)875-9092

QUALITY CONTROL DATA

Project: CHARLOTTE PIPE & FOUNDRY/UST
Pace Project No.: 9220762

LABORATORY CONTROL SAMPLE: 125439

Parameter	Units	Spike Conc.	LCS Result	LCS % Rec	% Rec Limits	Qualifiers
trans-1,3-Dichloropropene	ug/kg	50	56.6	113	73-135	
Trichloroethene	ug/kg	50	52.7	105	75-136	
Trichlorofluoromethane	ug/kg	50	58.7	117	69-144	
Vinyl acetate	ug/kg	100	107	107	50-150	
Vinyl chloride	ug/kg	50	66.1	132	61-145	
Xylene (Total)	ug/kg	150	155	103	73-138	
1,2-Dichloroethane-d4 (S)	%			105	69-121	
4-Bromofluorobenzene (S)	%			100	74-115	
Dibromofluoromethane (S)	%			105	79-116	
Toluene-d8 (S)	%			99	88-110	

MATRIX SPIKE SAMPLE: 125578

Parameter	Units	9220762004 Result	Spike Conc.	MS Result	MS % Rec	% Rec Limits	Qualifiers
1,1-Dichloroethene	ug/kg	ND	50.3	52.5	104	33-158	
Benzene	ug/kg	ND	50.3	59.7	119	46-143	
Chlorobenzene	ug/kg	ND	50.3	60.7	121	29-159	
Toluene	ug/kg	ND	50.3	56.7	113	38-145	
Trichloroethene	ug/kg	ND	50.3	60.0	119	70-130	
1,2-Dichloroethane-d4 (S)	%				95	69-121	
4-Bromofluorobenzene (S)	%				98	74-115	
Dibromofluoromethane (S)	%				97	79-116	
Toluene-d8 (S)	%				98	88-110	

SAMPLE DUPLICATE: 125577

Parameter	Units	9220927003 Result	Dup Result	RPD	Qualifiers
1,1,1,2-Tetrachloroethane	ug/kg	ND	ND	0	
1,1,1-Trichloroethane	ug/kg	ND	ND	0	
1,1,2,2-Tetrachloroethane	ug/kg	ND	ND	0	
1,1,2-Trichloroethane	ug/kg	ND	ND	0	
1,1-Dichloroethane	ug/kg	ND	ND	0	
1,1-Dichloroethene	ug/kg	ND	ND	0	
1,1-Dichloropropene	ug/kg	ND	ND	0	
1,2,3-Trichlorobenzene	ug/kg	ND	ND	0	
1,2,3-Trichloropropane	ug/kg	ND	ND	0	
1,2,4-Trichlorobenzene	ug/kg	ND	ND	0	
1,2,4-Trimethylbenzene	ug/kg	ND	ND	0	
1,2-Dibromo-3-chloropropane	ug/kg	ND	ND	0	
1,2-Dibromoethane (EDB)	ug/kg	ND	ND	0	
1,2-Dichlorobenzene	ug/kg	ND	ND	0	
1,2-Dichloroethane	ug/kg	ND	ND	0	
1,2-Dichloropropane	ug/kg	ND	ND	0	
1,3,5-Trimethylbenzene	ug/kg	ND	ND	0	
1,3-Dichlorobenzene	ug/kg	ND	ND	0	

This report shall not be reproduced, except in full,
without the written consent of Pace Analytical Services, Inc..

ACCREDITED IN ACCORDANCE WITH nelac

Pace Analytical®
www.pacelabs.com

Pace Analytical Services, Inc.
2225 Riverside Dr.
Asheville, NC 28804
(828)254-7176

Pace Analytical Services, Inc.
9800 Kincey Ave. Suite 100
Huntersville, NC 28078
(704)875-9092

QUALITY CONTROL DATA

Project: CHARLOTTE PIPE & FOUNDRY/UST
Pace Project No.: 9220762

SAMPLE DUPLICATE: 125577

Parameter	Units	9220927003 Result	Dup Result	RPD	Qualifiers
1,3-Dichloropropane	ug/kg	ND	ND	0	
1,4-Dichlorobenzene	ug/kg	ND	ND	0	
2,2-Dichloropropane	ug/kg	ND	ND	0	
2-Butanone (MEK)	ug/kg	ND	18.4J	77	
2-Chlorotoluene	ug/kg	ND	ND	0	
2-Hexanone	ug/kg	ND	ND	0	
4-Chlorotoluene	ug/kg	ND	ND	0	
4-Methyl-2-pentanone (MIBK)	ug/kg	ND	ND	0	
Acetone	ug/kg	375	170	75	R1
Benzene	ug/kg	ND	ND	0	
Bromobenzene	ug/kg	ND	ND	0	
Bromochloromethane	ug/kg	ND	ND	0	
Bromodichloromethane	ug/kg	ND	ND	0	
Bromoform	ug/kg	ND	ND	0	
Bromomethane	ug/kg	ND	ND	0	
Carbon tetrachloride	ug/kg	ND	ND	0	
Chlorobenzene	ug/kg	ND	ND	0	
Chloroethane	ug/kg	ND	ND	0	
Chloroform	ug/kg	ND	ND	0	
Chloromethane	ug/kg	ND	ND	0	
cis-1,2-Dichloroethene	ug/kg	ND	ND	0	
cis-1,3-Dichloropropene	ug/kg	ND	ND	0	
Dibromochloromethane	ug/kg	ND	ND	0	
Dibromomethane	ug/kg	ND	ND	0	
Dichlorodifluoromethane	ug/kg	ND	ND	0	
Diisopropyl ether	ug/kg	ND	ND	0	
Ethylbenzene	ug/kg	ND	ND	0	
Hexachloro-1,3-butadiene	ug/kg	ND	ND	0	
Isopropylbenzene (Cumene)	ug/kg	ND	ND	0	
m&p-Xylene	ug/kg	ND	ND	0	
Methyl-tert-butyl ether	ug/kg	ND	ND	0	
Methylene Chloride	ug/kg	ND	ND	200	
n-Butylbenzene	ug/kg	ND	ND	0	
n-Propylbenzene	ug/kg	ND	ND	0	
Naphthalene	ug/kg	ND	ND	0	
o-Xylene	ug/kg	ND	ND	0	
p-Isopropyltoluene	ug/kg	ND	ND	200	
sec-Butylbenzene	ug/kg	ND	ND	0	
Styrene	ug/kg	ND	ND	0	
tert-Butylbenzene	ug/kg	ND	ND	0	
Tetrachloroethene	ug/kg	ND	ND	0	
Toluene	ug/kg	ND	ND	0	
trans-1,2-Dichloroethene	ug/kg	ND	ND	0	
trans-1,3-Dichloropropene	ug/kg	ND	ND	0	
Trichloroethene	ug/kg	ND	ND	0	
Trichlorofluoromethane	ug/kg	ND	ND	0	
Vinyl acetate	ug/kg	ND	ND	0	
Vinyl chloride	ug/kg	ND	ND	0	

This report shall not be reproduced, except in full,
without the written consent of Pace Analytical Services, Inc..

ACCREDITED IN ACCORDANCE WITH nelac

Pace Analytical Services, Inc.
2225 Riverside Dr.
Asheville, NC 28804
(828)254-7176

Pace Analytical Services, Inc.
9800 Kincey Ave. Suite 100
Huntersville, NC 28078
(704)875-9092

QUALITY CONTROL DATA

Project: CHARLOTTE PIPE & FOUNDRY/UST
Pace Project No.: 9220762

SAMPLE DUPLICATE: 125577

Parameter	Units	9220927003 Result	Dup Result	RPD	Qualifiers
Xylene (Total)	ug/kg	ND	ND	28	
1,2-Dichloroethane-d4 (S)	%	109	95	42	
4-Bromofluorobenzene (S)	%	96	93	31	
Dibromofluoromethane (S)	%	108	97	39	
Toluene-d8 (S)	%	105	102	32	

This report shall not be reproduced, except in full,
without the written consent of Pace Analytical Services, Inc..

Pace Analytical®
www.pacelabs.com

Pace Analytical Services, Inc.
2225 Riverside Dr.
Asheville, NC 28804
(828)254-7176

Pace Analytical Services, Inc.
9800 Kincey Ave. Suite 100
Huntersville, NC 28078
(704)875-9092

QUALITY CONTROL DATA

Project: CHARLOTTE PIPE & FOUNDRY/UST
Pace Project No.: 9220762

QC Batch: OEXT/3490 Analysis Method: MADEP EPH
QC Batch Method: MADEP EPH Analysis Description: MADEP EPH NC Soil
Associated Lab Samples: 9220762001, 9220762002, 9220762003, 9220762004, 9220762005

METHOD BLANK: 127019
Associated Lab Samples: 9220762001, 9220762002, 9220762003, 9220762004, 9220762005

Parameter	Units	Blank Result	Reporting Limit	Qualifiers
Aliphatic (C09-C18)	mg/kg	ND	10.0	
Aliphatic (C19-C36)	mg/kg	ND	10.0	
Aromatic (C11-C22)	mg/kg	ND	10.0	
2-Bromonaphthalene (S)	%	97	40-140	
2-Fluorobiphenyl (S)	%	87	40-140	
Nonatriacontane (S)	%	94	40-140	
o-Terphenyl (S)	%	85	40-140	

LABORATORY CONTROL SAMPLE & LCSD: 127020 127021

Parameter	Units	Spike Conc.	LCS Result	LCSD Result	LCS % Rec	LCSD % Rec	% Rec Limits	RPD	Max RPD	Qualifiers
Aliphatic (C09-C18)	mg/kg	10	ND	ND	74	71	40-140	4	50	
Aliphatic (C19-C36)	mg/kg	13.3	10.8	10.1	81	76	40-140	7	50	
Aromatic (C11-C22)	mg/kg	28.3	26.8	30.0	95	106	40-140	11	50	
2-Bromonaphthalene (S)	%				81	106	40-140			
2-Fluorobiphenyl (S)	%				90	102	40-140			
Nonatriacontane (S)	%				100	95	40-140			
o-Terphenyl (S)	%				94	105	40-140			

This report shall not be reproduced, except in full,
without the written consent of Pace Analytical Services, Inc..

ACCREDITED IN ACCORDANCE WITH nelac

Pace Analytical®
www.pacelabs.com

Pace Analytical Services, Inc.
2225 Riverside Dr.
Asheville, NC 28804
(828)254-7176

Pace Analytical Services, Inc.
9800 Kincey Ave. Suite 100
Huntersville, NC 28078
(704)875-9092

QUALITY CONTROL DATA

Project: CHARLOTTE PIPE & FOUNDRY/UST
Pace Project No.: 9220762

QC Batch: OEXT/3499 | Analysis Method: EPA 8270
QC Batch Method: EPA 3546 | Analysis Description: 8270 Solid MSSV Microwave
Associated Lab Samples: 9220762001

METHOD BLANK: 127570
Associated Lab Samples: 9220762001

Parameter	Units	Blank Result	Reporting Limit	Qualifiers
1,2,4-Trichlorobenzene	ug/kg	ND	330	
1,2-Dichlorobenzene	ug/kg	ND	330	
1,2-Diphenylhydrazine	ug/kg	ND	330	
1,3-Dichlorobenzene	ug/kg	ND	330	
1,4-Dichlorobenzene	ug/kg	ND	330	
1-Methylnaphthalene	ug/kg	ND	330	
2,4,5-Trichlorophenol	ug/kg	ND	330	
2,4,6-Trichlorophenol	ug/kg	ND	330	
2,4-Dichlorophenol	ug/kg	ND	330	
2,4-Dimethylphenol	ug/kg	ND	330	
2,4-Dinitrophenol	ug/kg	ND	1650	
2,4-Dinitrotoluene	ug/kg	ND	330	
2,6-Dinitrotoluene	ug/kg	ND	330	
2-Chloronaphthalene	ug/kg	ND	330	
2-Chlorophenol	ug/kg	ND	330	
2-Methylnaphthalene	ug/kg	ND	330	
2-Methylphenol(o-Cresol)	ug/kg	ND	330	
2-Nitroaniline	ug/kg	ND	1650	
2-Nitrophenol	ug/kg	ND	330	
3&4-Methylphenol(m&p Cresol)	ug/kg	ND	330	
3,3'-Dichlorobenzidine	ug/kg	ND	1650	
3-Nitroaniline	ug/kg	ND	1650	
4,6-Dinitro-2-methylphenol	ug/kg	ND	660	
4-Bromophenylphenyl ether	ug/kg	ND	330	
4-Chloro-3-methylphenol	ug/kg	ND	660	
4-Chloroaniline	ug/kg	ND	1650	
4-Chlorophenylphenyl ether	ug/kg	ND	330	
4-Nitroaniline	ug/kg	ND	660	
4-Nitrophenol	ug/kg	ND	1650	
Acenaphthene	ug/kg	ND	330	
Acenaphthylene	ug/kg	ND	330	
Aniline	ug/kg	ND	330	
Anthracene	ug/kg	ND	330	
Benzo(a)anthracene	ug/kg	ND	330	
Benzo(a)pyrene	ug/kg	ND	330	
Benzo(b)fluoranthene	ug/kg	ND	330	
Benzo(g,h,i)perylene	ug/kg	ND	330	
Benzo(k)fluoranthene	ug/kg	ND	330	
Benzoic acid	ug/kg	ND	1650	
Benzyl alcohol	ug/kg	ND	660	
bis(2-Chloroethoxy)methane	ug/kg	ND	330	
bis(2-Chloroethyl) ether	ug/kg	ND	330	
bis(2-Chloroisopropyl) ether	ug/kg	ND	330	

This report shall not be reproduced, except in full,
without the written consent of Pace Analytical Services, Inc..

ACCREDITED IN ACCORDANCE WITH nelac

Pace Analytical®
www.pacelabs.com

Pace Analytical Services, Inc.
2225 Riverside Dr.
Asheville, NC 28804
(828)254-7176

Pace Analytical Services, Inc.
9800 Kincey Ave. Suite 100
Huntersville, NC 28078
(704)875-9092

QUALITY CONTROL DATA

Project: CHARLOTTE PIPE & FOUNDRY/UST
Pace Project No.: 9220762

METHOD BLANK: 127570

Associated Lab Samples: 9220762001

Parameter	Units	Blank Result	Reporting Limit	Qualifiers
bis(2-Ethylhexyl)phthalate	ug/kg	ND	330	
Butylbenzylphthalate	ug/kg	ND	330	
Chrysene	ug/kg	ND	330	
Di-n-butylphthalate	ug/kg	ND	330	
Di-n-octylphthalate	ug/kg	ND	330	
Dibenz(a,h)anthracene	ug/kg	ND	330	
Dibenzofuran	ug/kg	ND	330	
Diethylphthalate	ug/kg	ND	330	
Dimethylphthalate	ug/kg	ND	330	
Fluoranthene	ug/kg	ND	330	
Fluorene	ug/kg	ND	330	
Hexachloro-1,3-butadiene	ug/kg	ND	330	
Hexachlorobenzene	ug/kg	ND	330	
Hexachlorocyclopentadiene	ug/kg	ND	330	
Hexachloroethane	ug/kg	ND	330	
Indeno(1,2,3-cd)pyrene	ug/kg	ND	330	
Isophorone	ug/kg	ND	330	
N-Nitroso-di-n-propylamine	ug/kg	ND	330	
N-Nitrosodimethylamine	ug/kg	ND	330	
N-Nitrosodiphenylamine	ug/kg	ND	330	
Naphthalene	ug/kg	ND	330	
Nitrobenzene	ug/kg	ND	330	
Pentachlorophenol	ug/kg	ND	1650	
Phenanthrene	ug/kg	ND	330	
Phenol	ug/kg	ND	330	
Pyrene	ug/kg	ND	330	
2,4,6-Tribromophenol (S)	%	65	30-150	
2-Fluorobiphenyl (S)	%	73	30-150	
2-Fluorophenol (S)	%	72	30-150	
Nitrobenzene-d5 (S)	%	78	30-150	
Phenol-d6 (S)	%	72	30-150	
Terphenyl-d14 (S)	%	74	30-150	

LABORATORY CONTROL SAMPLE: 127571

Parameter	Units	Spike Conc.	LCS Result	LCS % Rec	% Rec Limits	Qualifiers
1,2,4-Trichlorobenzene	ug/kg	1670	957	57	50-150	
1,2-Dichlorobenzene	ug/kg	1670	950	57	50-150	
1,2-Diphenylhydrazine	ug/kg	1670	1100	66	50-150	
1,3-Dichlorobenzene	ug/kg	1670	916	55	50-150	
1,4-Dichlorobenzene	ug/kg	1670	917	55	50-150	
1-Methylnaphthalene	ug/kg	1670	2270	136	50-150	
2,4,5-Trichlorophenol	ug/kg	1670	1030	62	50-150	
2,4,6-Trichlorophenol	ug/kg	1670	1030	62	50-150	
2,4-Dichlorophenol	ug/kg	1670	906	54	50-150	

This report shall not be reproduced, except in full,
without the written consent of Pace Analytical Services, Inc..

ACCREDITED IN ACCORDANCE WITH nelac

Pace Analytical®
www.pacelabs.com

Pace Analytical Services, Inc.
2225 Riverside Dr.
Asheville, NC 28804
(828)254-7176

Pace Analytical Services, Inc.
9800 Kincey Ave. Suite 100
Huntersville, NC 28078
(704)875-9092

QUALITY CONTROL DATA

Project: CHARLOTTE PIPE & FOUNDRY/UST
Pace Project No.: 9220762

LABORATORY CONTROL SAMPLE: 127571

Parameter	Units	Spike Conc.	LCS Result	LCS % Rec	% Rec Limits	Qualifiers
2,4-Dimethylphenol	ug/kg	1670	1080	65	50-150	
2,4-Dinitrophenol	ug/kg	1670	897J	54	50-150	
2,4-Dinitrotoluene	ug/kg	1670	1130	68	50-150	
2,6-Dinitrotoluene	ug/kg	1670	1020	61	50-150	
2-Chloronaphthalene	ug/kg	1670	953	57	50-150	
2-Chlorophenol	ug/kg	1670	1100	66	50-150	
2-Methylnaphthalene	ug/kg	1670	972	58	50-150	
2-Methylphenol(o-Cresol)	ug/kg	1670	968	58	50-150	
2-Nitroaniline	ug/kg	1670	1330J	80	50-150	
2-Nitrophenol	ug/kg	1670	1060	63	50-150	
3&4-Methylphenol(m&p Cresol)	ug/kg	1670	1070	64	50-150	
3,3'-Dichlorobenzidine	ug/kg	1670	1370J	82	50-150	
3-Nitroaniline	ug/kg	1670	1500J	90	50-150	
4,6-Dinitro-2-methylphenol	ug/kg	1670	1150	69	50-150	
4-Bromophenylphenyl ether	ug/kg	1670	1170	70	50-150	
4-Chloro-3-methylphenol	ug/kg	1670	1140	69	50-150	
4-Chloroaniline	ug/kg	1670	1640J	98	50-150	
4-Chlorophenylphenyl ether	ug/kg	1670	1080	65	50-150	
4-Nitroaniline	ug/kg	1670	1400	84	50-150	
4-Nitrophenol	ug/kg	1670	1150J	69	50-150	
Acenaphthene	ug/kg	1670	1210	73	50-150	
Acenaphthylene	ug/kg	1670	1170	70	50-150	
Aniline	ug/kg	1670	899	54	50-150	
Anthracene	ug/kg	1670	1460	88	50-150	
Benzo(a)anthracene	ug/kg	1670	1270	76	50-150	
Benzo(a)pyrene	ug/kg	1670	1190	71	50-150	
Benzo(b)fluoranthene	ug/kg	1670	1260	76	50-150	
Benzo(g,h,i)perylene	ug/kg	1670	1130	68	50-150	
Benzo(k)fluoranthene	ug/kg	1670	1080	65	50-150	
Benzoic acid	ug/kg	1670	620J	37	50-150	L2
Benzyl alcohol	ug/kg	1670	1250	75	50-150	
bis(2-Chloroethoxy)methane	ug/kg	1670	1030	62	50-150	
bis(2-Chloroethyl) ether	ug/kg	1670	943	57	50-150	
bis(2-Chloroisopropyl) ether	ug/kg	1670	1420	85	50-150	
bis(2-Ethylhexyl)phthalate	ug/kg	1670	1600	96	50-150	
Butylbenzylphthalate	ug/kg	1670	1530	92	50-150	
Chrysene	ug/kg	1670	1210	73	50-150	
Di-n-butylphthalate	ug/kg	1670	1520	91	50-150	
Di-n-octylphthalate	ug/kg	1670	1550	93	50-150	
Dibenz(a,h)anthracene	ug/kg	1670	1140	68	50-150	
Dibenzofuran	ug/kg	1670	1010	60	50-150	
Diethylphthalate	ug/kg	1670	1300	78	50-150	
Dimethylphthalate	ug/kg	1670	1210	72	50-150	
Fluoranthene	ug/kg	1670	1180	71	50-150	
Fluorene	ug/kg	1670	1290	77	50-150	
Hexachloro-1,3-butadiene	ug/kg	1670	966	58	50-150	
Hexachlorobenzene	ug/kg	1670	1080	65	50-150	
Hexachlorocyclopentadiene	ug/kg	1670	955	57	50-150	

This report shall not be reproduced, except in full,
without the written consent of Pace Analytical Services, Inc..

ACCREDITED IN ACCORDANCE WITH nelac

Pace Analytical®
www.pacelabs.com

Pace Analytical Services, Inc.
2225 Riverside Dr.
Asheville, NC 28804
(828)254-7176

Pace Analytical Services, Inc.
9800 Kincey Ave. Suite 100
Huntersville, NC 28078
(704)875-9092

QUALITY CONTROL DATA

Project: CHARLOTTE PIPE & FOUNDRY/UST
Pace Project No.: 9220762

LABORATORY CONTROL SAMPLE: 127571

Parameter	Units	Spike Conc.	LCS Result	LCS % Rec	% Rec Limits	Qualifiers
Hexachloroethane	ug/kg	1670	1020	61	50-150	
Indeno(1,2,3-cd)pyrene	ug/kg	1670	1100	66	50-150	
Isophorone	ug/kg	1670	1370	82	50-150	
N-Nitroso-di-n-propylamine	ug/kg	1670	1190	71	50-150	
N-Nitrosodimethylamine	ug/kg	1670	1200	72	50-150	
N-Nitrosodiphenylamine	ug/kg	1670	1240	75	50-150	
Naphthalene	ug/kg	1670	1090	65	50-150	
Nitrobenzene	ug/kg	1670	1200	72	50-150	
Pentachlorophenol	ug/kg	1670	861J	52	50-150	
Phenanthrene	ug/kg	1670	1230	74	50-150	
Phenol	ug/kg	1670	1020	61	50-150	
Pyrene	ug/kg	1670	1160	70	50-150	
2,4,6-Tribromophenol (S)	%			72	30-150	
2-Fluorobiphenyl (S)	%			65	30-150	
2-Fluorophenol (S)	%			62	30-150	
Nitrobenzene-d5 (S)	%			65	30-150	
Phenol-d6 (S)	%			68	30-150	
Terphenyl-d14 (S)	%			74	30-150	

MATRIX SPIKE & MATRIX SPIKE DUPLICATE: 127572 127573

Parameter	Units	9220538004 Result	MS Spike Conc.	MSD Spike Conc.	MS Result	MSD Result	MS % Rec	MSD % Rec	% Rec Limits	RPD	Qual
1,2,4-Trichlorobenzene	ug/kg	ND	2190	2190	894	939	41	43	50-150	5	M0
1,4-Dichlorobenzene	ug/kg	ND	2190	2190	1040	1120	47	52	50-150	8	M0
2,4-Dinitrotoluene	ug/kg	ND	2190	2190	883	1670	40	76	50-150	62	M0,R1
2-Chlorophenol	ug/kg	ND	2190	2190	1240	1360	57	62	50-150	9	
4-Chloro-3-methylphenol	ug/kg	ND	2190	2190	982	1250	45	57	50-150	24	M0
4-Nitrophenol	ug/kg	ND	2190	2190	876J	1160J	40	53	50-150		M0
Acenaphthene	ug/kg	ND	2190	2190	1270	1260	58	58	50-150	1	
N-Nitroso-di-n-propylamine	ug/kg	ND	2190	2190	1450	1690	66	78	50-150	15	
Pentachlorophenol	ug/kg	ND	2190	2190	1030J	932J	47	43	50-150		M0
Phenol	ug/kg	ND	2190	2190	1140	1330	52	61	50-150	15	
Pyrene	ug/kg	ND	2190	2190	918	919	42	42	50-150	.08	M0
2,4,6-Tribromophenol (S)	%						101	103	30-150		
2-Fluorobiphenyl (S)	%						58	71	30-150		
2-Fluorophenol (S)	%						51	56	30-150		
Nitrobenzene-d5 (S)	%						20	6	30-150		S1
Phenol-d6 (S)	%						56	64	30-150		
Terphenyl-d14 (S)	%						56	57	30-150		

This report shall not be reproduced, except in full,
without the written consent of Pace Analytical Services, Inc..

ACCREDITED IN ACCORDANCE WITH nelac

Pace Analytical®
www.pacelabs.com

Pace Analytical Services, Inc.
2225 Riverside Dr.
Asheville, NC 28804
(828)254-7176

Pace Analytical Services, Inc.
9800 Kincey Ave. Suite 100
Huntersville, NC 28078
(704)875-9092

QUALIFIERS

Project: CHARLOTTE PIPE & FOUNDRY/UST
Pace Project No.: 9220762

DEFINITIONS

DF - Dilution Factor, if reported, represents the factor applied to the reported data due to changes in sample preparation, dilution of the sample aliquot, or moisture content.

ND - Not Detected at or above adjusted reporting limit.

J - Estimated concentration above the adjusted method detection limit and below the adjusted reporting limit.

MDL - Adjusted Method Detection Limit.

S - Surrogate

1,2-Diphenylhydrazine (8270 listed analyte) decomposes to Azobenzene.

Consistent with EPA guidelines, unrounded data are displayed and have been used to calculate % recovery and RPD values.

LCS(D) - Laboratory Control Sample (Duplicate)

MS(D) - Matrix Spike (Duplicate)

DUP - Sample Duplicate

RPD - Relative Percent Difference

NC - Not Calculable.

Pace Analytical is NELAP accredited. Contact your Pace PM for the current list of accredited analytes.

ANALYTE QUALIFIERS

1g	Acid surrogate recovery outside of control limits. The data was accepted based on valid recovery of the 2 remaining acid surrogates.
B-	Analyte detected in method blank but was not detected in the associated samples.
L2	Analyte recovery in the laboratory control sample (LCS) was below QC limits. Results for this analyte in associated samples may be biased low.
M0	Matrix spike recovery was outside laboratory control limits.
R1	RPD value was outside control limits.
S0	Surrogate recovery outside laboratory control limits.
S1	Surrogate recovery outside laboratory control limits (confirmed by re-analysis).

This report shall not be reproduced, except in full,
without the written consent of Pace Analytical Services, Inc..

ACCREDITED IN ACCORDANCE WITH nelac

Sample Condition Upon Receipt

Pace Analytical

Client Name: WPC Project # 9220762

Courier: ☐ Fed Ex ☐ UPS ☐ USPS ☐ Client ☐ Commercial ☑ Pace Other_____

Custody Seal on Cooler/Box Present: ☐ yes ☑ no Seals intact: ☐ yes ☑ no

Optional
Proj. Due Date: N/A
Proj. Name: N/A

Packing Material: ☐ Bubble Wrap ☑ Bubble Bags ☐ None ☐ Other_____

Thermometer Used T060 Type of Ice: (Wet) Blue None ☑ Samples on ice, cooling process has begun

Cooler Temperature 6.0 Biological Tissue is Frozen: Yes No N/A

Date and Initials of person examining contents: NP 6/4/08

Temp should be above freezing to 6°C

		Comments:
Chain of Custody Present:	☑Yes ☐No ☐N/A	1.
Chain of Custody Filled Out:	☑Yes ☐No ☐N/A	2.
Chain of Custody Relinquished:	☑Yes ☐No ☐N/A	3.
Sampler Name & Signature on COC:	☑Yes ☐No ☐N/A	4.
Samples Arrived within Hold Time:	☑Yes ☐No ☐N/A	5.
Short Hold Time Analysis (<72hr):	☐Yes ☑No ☐N/A	6.
Rush Turn Around Time Requested:	☐Yes ☑No ☐N/A	7.
Sufficient Volume:	☑Yes ☐No ☐N/A	8.
Correct Containers Used:	☑Yes ☐No ☐N/A	9.
-Pace Containers Used:	☑Yes ☐No ☐N/A	
Containers Intact:	☑Yes ☐No ☐N/A	10.
Filtered volume received for Dissolved tests	☐Yes ☐No ☑N/A	11.
Sample Labels match COC:	☑Yes ☐No ☐N/A	12.
-Includes date/time/ID/Analysis Matrix:_____		
All containers needing preservation have been checked.	☑Yes ☐No ☐N/A	13.
All containers needing preservation are found to be in compliance with EPA recommendation.	☑Yes ☐No ☐N/A	
exceptions: VOA, coliform, TOC, O&G, WI-DRO (water)	☐Yes ☐No	Initial when completed
Samples checked for dechlorination:	☐Yes ☐No ☑N/A	14.
Headspace in VOA Vials (>6mm):	☐Yes ☐No ☑N/A	15.
Trip Blank Present:	☐Yes ☐No ☑N/A	16.
Trip Blank Custody Seals Present	☐Yes ☐No ☑N/A	
Pace Trip Blank Lot # (if purchased): N/A		

Client Notification/ Resolution: Field Data Required? Y / N / N/A

Person Contacted: _____ Date/Time: _____

Comments/ Resolution: _____

Project Manager Review: [signature] Date: 6-4-08

Note: Whenever there is a discrepancy affecting North Carolina compliance samples, a copy of this form will be sent to the North Carolina DENR

APPENDIX V
SITE PHOTOGRAPHS

Photograph 1 – Initial soil removal to unearth tank

Photograph 2 – Some soil staining observed in the base of the excavation

Photograph 3 – View of tanks, observed post removal

Photograph 4 – View of corrosion pitting on the tanks removed

Photograph 5 – View of condition of the tanks removed

Photograph 6 – View of condition of the tanks removed