November 17, 1994

Ms. Laura Kay Dechant
Hydrogeologist
Department of Environment, Health, and Natural Resources
Division of Environmental Management - Ground Water Section
50 Woodfin Place
Asheville, North Carolina 28801

Subject: Girmes Site, Formerly SKF Ground Water Incident No. 10032
Buncombe County, North Carolina

Dear Ms. Dechant:

Enclosed is one copy of our report Comprehensive Site Assessment, Girmes Site, Formerly SKF USA Inc., Asheville, North Carolina. This report presents results of our Comprehensive Site Assessment activities performed at the Girmes site.

If you have questions or comments, please let me know.

Sincerely,

RMT, Inc.

Dan O. Madison, Jr. PG
Consulting Hydrogeologist

cc with enclosure: Mr. C. William McGlocklin - SKF USA Inc. (one copy)
Mr. Allen G. Belenson - SKF USA Inc. (one copy)
Mr. William Clarke - Roberts Stevens & Cogburn, PA (one copy)
Mr. Amos C. Dawson, III - Maupin Taylor Ellis & Adams (one copy)
Mr. Barry Nelson - Bain & Palmer (one copy)
Mr. Paul Flay - J. L. deBall Girmes of America

RMT, INC. — GREENVILLE, SC
100 VERDAE BOULEVARD • 29607-3825
P.O. BOX 16778 • 29606-6778
803/281-0030 • 803/281-0288 FAX

COMPREHENSIVE SITE ASSESSMENT

GIRMES SITE, FORMERLY SKF USA, INC.
ASHEVILLE, NORTH CAROLINA

November 1994

Kenneth A. Lauber
Staff Hydrogeologist

Dan O. Madison, Jr., P.G. #249
Consulting Hydrogeologist

Robert P. Stevens, P.E.
Project Manager

RMT, INC. — GREENVILLE, SC
100 VERDAE BOULEVARD ▪ 29607-3825
P.O. BOX 16778 ▪ 29606-6778
803/281-0030 ▪ 803/281-0288 FAX

RMT INC.

I:\WP\70\7014402.CSA/cdf94

TABLE OF CONTENTS

Section **Page**

EXECUTIVE SUMMARY ES-1

1. INTRODUCTION 1-1
1.1 Purpose and Scope 1-1
1.2 Site History 1-3

2. PREVIOUS INVESTIGATIONS 2-1

3. SOURCE INVESTIGATION 3-1
3.1 Drilling and Sampling 3-1
3.2 Analytical Results 3-2
3.3 Conclusions 3-3

4. HYDROGEOLOGIC SETTING 4-1
4.1 Regional Geology 4-1
4.2 Site Geology 4-1
4.3 Site Hydrogeology 4-2
4.3.1 Monitoring Well Installation 4-3
4.3.2 Water Table 4-8
4.3.3 Hydraulic Gradients 4-8
4.3.4 Hydraulic Conductivity 4-9
4.3.5 Seepage Velocity 4-13

5. GROUND WATER QUALITY 5-1
5.1 Phase 1 Ground Water Field Screening - NC DOT Property 5-1
5.1.1 *In-Situ* Sampling Methods 5-1
5.1.2 Field Investigation 5-2
5.1.3 Field Screening Results 5-2
5.1.4 Conclusions 5-4
5.2 Phase 2 Ground Water Quality Results 5-4
5.2.1 Ground Water Sampling 5-4
5.2.2 Analytical Results 5-4
5.2.3 Conclusions 5-9
5.3 Phase 3 Ground Water Investigation - Southwest Side Girmes Facility 5-10
5.3.1 Ground Water Sampling 5-10
5.3.2 Analytical Results 5-10
5.3.3 Conclusion 5-12
5.4 Phase 4 Ground Water Investigation - Dotson Property 5-12
5.4.1 Field Screening Results 5-12
5.4.2 Ground Water Sampling 5-14
5.4.3 Analytical Results 5-14
5.4.4 Conclusions 5-17

TABLE OF CONTENTS (Continued)

Section **Page**

6. MIGRATION PATHWAYS AND POTENTIAL RECEPTORS 6-1
6.1 Migration Pathways 6-1
6.2 Potential Receptors 6-2

7. CONCLUSIONS 7-1

8. RECOMMENDATIONS 8-1

9. REFERENCES 9-1

List of Tables
Table 4-1 Summary of Well Construction Details 4-4
Table 4-2 Summary of Ground Water Elevations - September 19, 1994 4-10
Table 4-3 Summary of Hydraulic Conductivity Measurements - Monitoring Wells 4-11
Table 4-4 Summary of Hydraulic Conductivity Measurements - Hydrocone® Sample Locations 4-12
Table 5-1 Phase 1 - Summary of Ground Water Screening Results 5-3
Table 5-2 Summary of Ground Water Elevations 5-5
Table 5-3 Summary of Field Indicator Parameters - November 9-30, 1993 5-7
Table 5-4 Phase 3 - Surface Water/Ground Water Analytical Results 5-11
Table 5-5 Summary of Field Indicator Parameters - April 20, 1994 5-11
Table 5-6 Phase 5 - Summary of Ground Water Screening Results 5-13
Table 5-7 Phase 4 - Surface and Ground Water Analytical Results Southwest Side of the Girmes Facility 5-15
Table 5-8 Summary of Field Indicator Parameters - August 18-19, 1994 5-16
Table 6-1 Summary of Adjacent Property Owners 6-4

List of Figures
Figure 1-1 Site Location Map 1-2
Figure 3-1 Cross Section of Potential Source Area 3-4
Figure 6-1 Location of Adjacent Property Owners 6-5

List of Appendices
Appendix A Notice of Violation
Appendix B Laboratory Analytical Reports for Subsurface Soils
Appendix C Boring Logs for Wells and Soil Borings Installed by SKF USA
Appendix D Boring Logs for Wells Installed by Girmes and a Prospective Buyer
Appendix E Piezocone Sounding and Hydrocone® Test Data
Appendix F Well Construction Diagrams
Appendix G Hydraulic Conductivity Test Results
Appendix H Seepage Velocity Calculations
Appendix I Laboratory Analytical Reports for Hydrocone® Samples
Appendix J Laboratory Analytical Reports for Ground Water Monitoring Wells
Appendix K Memo - Availability of Treated Water along Gashes Creek Road

TABLE OF CONTENTS (Continued)

Section **Page**

List of Plates

Plate 1 Location of Data Points
Plate 2 Hydrogeologic Cross Section A-A'
Plate 3 Hydrogeologic Cross Section B-B'
Plate 4 Hydrogeologic Cross Section C-C'
Plate 5 Configuration of Water Table - September 19, 1994
Plate 6 Trichloroethene Concentrations in Ground Water
Plate 7 1,2-Dichloroethene Concentrations in Ground Water
Plate 8 Cross Section A-A' With Trichloroethene Isoconcentrations
Plate 9 Cross Section B-B' With Trichloroethene Isoconcentrations
Plate 10 Cross Section C-C' with Trichloroethene Isoconcentrations
Plate 11 Cross Section A-A' with 1,2-Dichloroethene Isoconcentrations
Plate 12 Cross Section B-B' with 1,2-Dichloroethene Isoconcentrations
Plate 13 Cross Section C-C' with 1,2-Dichloroethene Isoconcentrations

EXECUTIVE SUMMARY

Girmes performed an Environmental Assessment in 1991. As part of this assessment, Girmes identified an area of soils affected by petroleum hydrocarbons such as Varsol. The lateral extent of affected soils was defined, and remediation was completed by removing the affected soils. After the soils were removed, a ground water investigation concluded that the ground water had been affected by a release of volatile organic compounds (VOCs), in particular, trichloroethene, 1,2-dichloroethene, and vinyl chloride. Ground water in both the saprolite and bedrock was found to be affected. On the basis of results of the ground water investigation and sworn statements from former SKF employees, the North Carolina Department of Environmental Management (NC DEM) issued a Notice of Violation (NOV) to SKF USA, Inc. (SKF). The NOV required that SKF complete a Comprehensive Site Assessment (CSA) by December 31, 1993.

RMT completed the CSA in four phases from June 1993 to September 1994. Phase 1 and Phase 2 consisted of completing the investigation of source areas and the delineation of a ground water plume on the northeast side of the site. No remaining sources of VOCs were found in these soils. The plume of VOCs consists primarily of trichloroethene with minor concentrations of 1,2-dichloroethene and vinyl chloride. The presence of 1,2-dichloroethene and vinyl chloride indicates that biodegradation of the trichloroethene is taking place. The plume extends northeast on to NC DOT property and then turns northwest with ground water flow towards the Swannanoa River. The plume is expected to dissipate naturally before it reaches the Swannanoa River. NC DOT owns all of the property between the Girmes facility and the Swannanoa River.

During Phase 3 and Phase 4, a ground water plume on the southwest side of the site was defined. This plume consists primarily of trichloroethene with minor concentrations of 1,2-dichloroethene in some wells. The plume extends to Gashes Creek. Trichloroethene, along with some 1,2-dichloroethene and vinyl chloride, were also found on the west side of Gashes Creek on property owned by Dotson Metal Finishing (Dotson). On the west side of the Girmes site the highest trichloroethene concentrations were found in ground water on Dotson's property. Information developed during the course of the assessment indicated that Dotson used trichloroethene at its facilities. Trichloroethene detected in ground water on the Dotson metal finishing property may be the result of Dotson's operations. Ground water on Dotson's property appears to flow northeastward towards Gashes Creek. Low concentrations

of trichloroethene have been detected in Gashes Creek adjacent to the site. However, concentrations do not exceed allowable limits. Gashes Creek flows northward to Swannanoa River where it discharges. Trichloroethene concentrations are expected to dissipate before reaching the Swannanoa River.

Ground water is the primary migration pathway for waste constituents at the Girmes site. Potential receptors of affected ground water were not found within the specified radius of 1,500 feet. The only water wells identified in the area are one unused production well on the Girmes property and two unused production wells on Dotson's property. Public water is available throughout the area.

Section 1
INTRODUCTION

The J. L. deBall Girmes of America (Girmes) site is a former textile plant located on the east side of Asheville, North Carolina (NC). The site location is shown on Figure 1-1. The site was formerly occupied by Leigh Industries from March to December 1958 and by SKF USA, Inc. (SKF) from approximately 1960 to 1973. Girmes conducted textile finishing operations from 1973 until plant closure in 1990. Environmental assessments were conducted at the site by Girmes and a prospective buyer between April 1991 and March 1993. These investigations detected Varsol (a nonhalogenated hydrocarbon solvent) in soils and trichloroethene, 1,2-dichloroethene, and vinyl chloride in ground water on the northeast side of the facility. Girmes removed the affected soils in 1991. On the basis of the ground water analytical results and sworn statements by former SKF employees, the North Carolina Division of Environmental Management (NC DEM) issued a Notice of Violation (NOV) to SKF on April 21, 1993. The NOV identified two violations of NC law: release of Varsol and trichloroethene to water or lands, and the presence of trichloroethene, 1,2-dichloroethene, and vinyl chloride in ground water. NC DEM required SKF to conduct a Comprehensive Site Assessment (CSA) in order to address the violations so noted in the NOV. A copy of the NOV is included as Appendix A.

1.1 Purpose and Scope

This CSA has been prepared in response to the NOV. The purpose of the CSA is to sufficiently characterize the nature and extent of affected ground water and soils at the Girmes site, such that a Corrective Action Plan can be developed.

The scope of this assessment was established in four phases. Phase 1 included organization and evaluation of existing data for the site, sampling of existing monitoring wells for VOCs and Varsol-related hydrocarbons, and conducting ground water field screening to determine the possible presence of affected ground water on North Carolina Department of Transportation (NC DOT) property, located adjacent to the Girmes site. Phase 2 included installing monitoring wells to verify the results of ground water field screening and to assess ground water conditions at the southwest and north sides of the site. In addition, subsurface soil samples were collected to investigate possible source areas at the east side of the Girmes site. Phase 3 consisted of an attempt to collect *in-situ* ground water samples

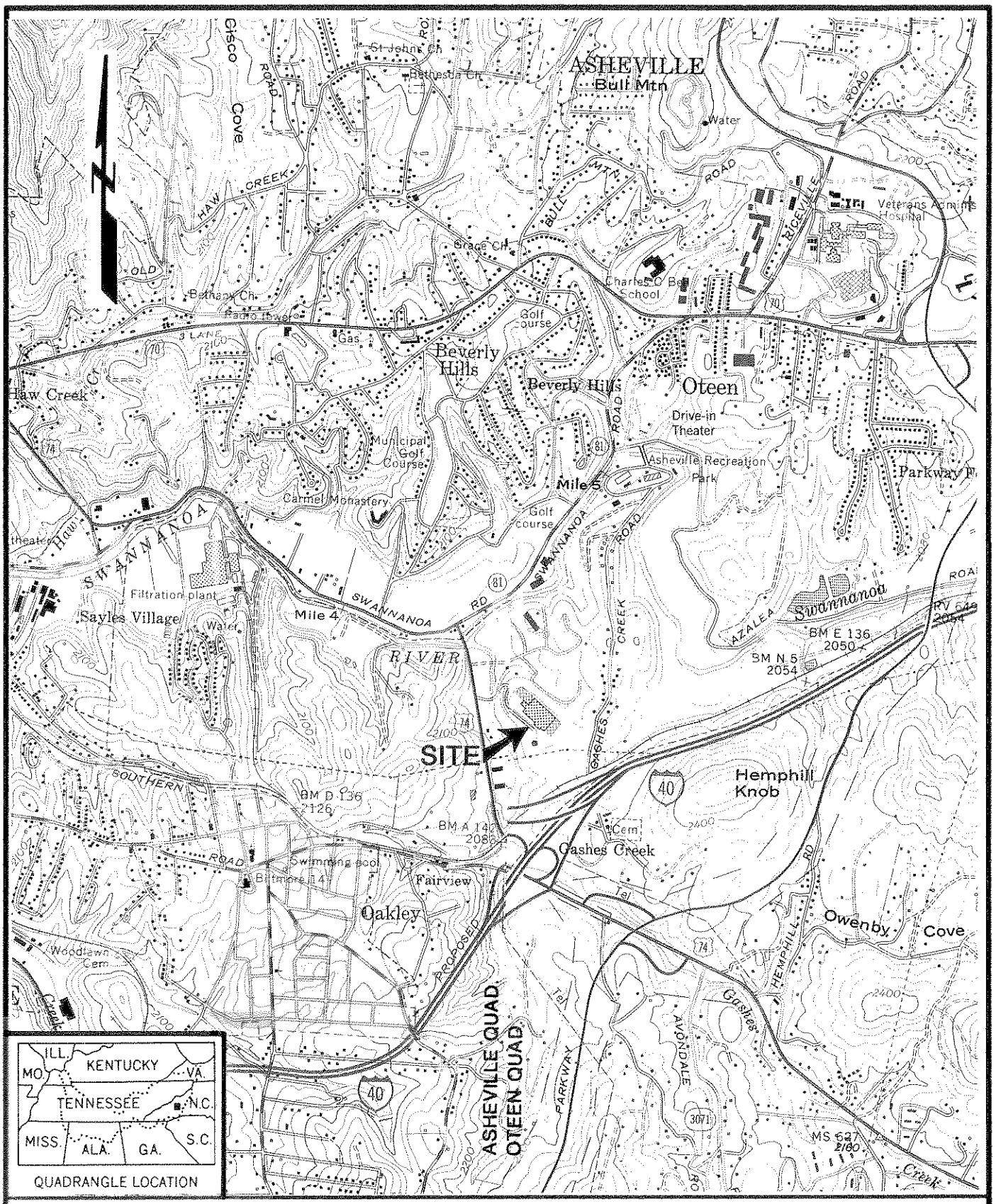

ASHEVILLE QUAD
OTEEN QUAD

RMT INC

70144.02
1194

FIGURE 1-1
SITE LOCATION MAP
SCALE: 1"=2000'

GIRMES SITE
FORMERLY SKF-USA INC.
ASHEVILLE, NC

THE PRINT MACHINE, INC. N03478

on the southwest side of the site along Gashes Creek. This attempt was unsuccessful due to the presence of shallow bedrock. As an alternative, five monitoring wells were installed on the Girmes site, along Gashes Creek. This phase also included sampling of surface waters along Gashes Creek, and installation of an additional monitoring well to determine the downgradient extent of affected ground water on NC DOT property.

Phase 4 involved investigating potentially affected ground water on Dotson Metal Finishing (Dotson) property which is directly across (southwest) Gashes Creek from the Girmes site. This phase included field screening of *in-situ* ground water samples. Following the field screening monitoring wells were installed on Dotson property and the Girmes site to complete the delineation of the lateral extent of affected ground water on the southwest side of the site. Phase 4 tasks also included resampling of surface waters from Gashes Creek to verify previous results, and sampling of ground water from an unused production well at the Dotson facility.

1.2 Site History

Leigh Industries began operations at the site in March 1958 and discontinued operation in December 1958. Leigh Industries made metal stampings and diffusers for the heating and air conditioning industry. SKF began operations as a bearings manufacturer in 1960 and continued until 1973 when J.L. deBall Girmes, Inc. began a textile operation. Girmes discontinued their textile operation in 1990 and now leases the facility through a subsidiary (Asheville Property Administration & Leasing, Inc.) to Beacon Manufacturing as a dry goods warehouse.

The NC DOT began operations on the adjacent property to the north and northeast in the early 1960s. The NC DOT now conducts extensive operations which include road materials storage, vehicle maintenance and fueling facilities, geotechnical facility, salt and cinders storage, a materials testing laboratory, and various office buildings.

Dotson Metal Finishing currently conducts metal plating operations at its facility, which is located to the south west across Gashes Creek from the Girmes site. The operation consists of electrochemical plating of various automobile parts. The facility has been in continuous operation under various ownership since 1970. During an interview with an employee of Dotson by SKF counsel, it was revealed that Dotson had used trichloroethene in the past for the purpose of cleaning the metal parts

before the electroplating process was initiated. The spent trichloroethene was allegedly discharged to the sewer line.

Section 2
PREVIOUS INVESTIGATIONS

Investigation of soils and ground water at the Girmes site began in 1991. A summary of the previous investigations is provided below:

March 1992 An environmental assessment of the Girmes site, that documented plant closure activities, was prepared by Bain, Palmer & Associates (BPA) for Girmes (Bain, Palmer & Associates, Inc., 1992). The report described activities conducted by BPA, including soil sampling and analyses, tank testing, documentation of construction debris removal, and associated soil tests. During assessment activities, soil samples were obtained from three areas: the ball field debris area, located southeast of the facility; the slope debris area; and the drainage area, both of which are located on the northeast side of the facility. Varsol, a petroleum-based solvent, was detected in soils collected from the slope debris and drainage areas at levels of 160 ppm and 430 ppm, respectively. Based on these results, the slope debris area (about 40 truckloads) and the drainage area (about 1,000 cubic yards) were excavated and the soils were stockpiled on-site for testing prior to removal off-site. Subsequent sampling of excavated areas confirmed the removal of soils containing Varsol. A composite sample of the stockpiled soils was collected and the PCB Aroclor 1254 was detected at a level of 5.4 ppm. Four additional soil samples collected from the soil stockpile for verification detected Aroclor 1254 at levels of 2.2 ppm, 1.3 ppm, 3.3 ppm, and 2.2 ppm. The stockpiled soils were removed, treated off-site, and disposed of in a landfill.

January 1993 A Phase II site assessment was conducted by S&ME, Inc. for a prospective buyer of the facility (S&ME, Inc., 1993). The assessment included nine additional soil borings, eight hand auger samples, installation of two monitoring wells, a backhoe investigation, and ground water sampling and analysis. During this investigation, the volatile organic compounds (VOCs) trichloroethene and 1,2-dichloroethene were detected in ground water beneath the site. Soil samples collected from the slope debris area and adjacent to the pump house detected oil and grease and Total Petroleum Hydrocarbons (TPH) compounds. Some metal waste debris was noted in soils on the northeast side of the

plant. S&ME did not conduct any sampling or analysis for PCBs during this investigation.

March 1993 A supplemental investigation was conducted by BPA on behalf of Girmes to verify the findings reported by S&ME (Bain, Palmer & Associates, Inc., 1993). Seven monitoring wells were installed to investigate ground water quality conditions beneath the site. Two of the seven monitoring wells (MW-4 and MW-5) were installed on top of the ridge adjacent to the facility. The water table in this area is below the bedrock surface. Therefore these wells were constructed in bedrock; the other five wells were constructed in saturated saprolite. The VOCs trichloroethene and 1,2-dichloroethene were detected in five of seven monitoring wells (MW-4, MW-5, MW-7, MW-9, and MW-10) installed during the investigation and in one of the existing monitoring wells (MW-2). The VOC vinyl chloride was detected in one of the monitoring wells (MW-10).

The highest concentrations of VOCs were found in monitoring wells MW-4 and MW-5. These wells are located on the north east side of the plant and are situated at the top of the steep slope. MW-9 also contained elevated levels of VOCs and is located on the same side of the plant, but at the bottom of the slope. Soils at the pump house that were affected by TPH and oil and grease compounds were removed and soil samples were collected to document closure.

The results of the three previous investigations of soils and ground water quality can be summarized as follows:

- Soils affected by the release of Varsol were identified and removed (Bain, Palmer & Associates, 1992).
- Ground water on the northeast side of the Site is affected by VOCs.
- Concentrations of VOCs in ground water were in exceedance of state standards.
- The highest VOC concentrations were observed in wells MW-4 and MW-5 located adjacent to the facility.
- The direction of ground water flow suggested that off-site migration was possible.

On the basis of these investigations and depositions by former SKF employees, NC DEM concluded that two violations of North Carolina law had occurred. The violations consisted of the following:

- The release of Varsol and trichloroethene,
- The presence of trichloroethene, 1,2-dichloroethene, and vinyl chloride in the ground water at the Site.

On April 21, 1993, NC DEM issued a NOV to SKF that requested a CSA be completed to address the two violations.

Section 3
SOURCE INVESTIGATION

The intent of the CSA is to sufficiently characterize the extent of affected *soils* and ground water such that corrective action can be accomplished. During the previous investigations, soils affected by Varsol were identified and removed from the Site.

Varsol-affected soils were found near the northeast corner of the Girmes facility during previous investigations. The affected soils were removed in 1991. Varsol is a product manufactured by Exxon Chemicals of America. According to Exxon, Varsol is similar to mineral spirits and contains approximately 7 to 14.7 percent benzene, toluene, ethylbenzene, xylene (BTEX). Ground water samples were obtained from wells MW-1, MW-2, MW-4, MW-5, MW-6, MW-7, MW-8, MW-9, and MW-10 in June 1993 and analyzed for BTEX and VOCs (RMT, Inc., 1993). BTEX was not detected in any of the samples. Also, BTEX was not detected in wells sampled in November 1993; therefore, there is no indication that ground water has been affected by Varsol.

Based on the depositions from former employees, and results of ground water analyses, the area adjacent to MW-5 was identified by NC DEM as needing further investigation for possible sources. After review of the previous investigation reports, RMT designed a soils investigation that could assess soils for the presence of VOCs.

Three soil borings, SB-1, SB-2, and SB-3, were drilled during Phase 2 of the CSA to assess whether affected soils are present on the northeast side of the Girmes property. Plate 1 shows the boring locations. Boring logs are included in Appendix C. These borings were located in an area where waste debris may have been disposed and could potentially be a source of VOCs to ground water. Assorted debris such as metal, general trash, old drums, and cans was found on the hillside below during the investigation.

3.1 Drilling and Sampling

Each boring was drilled using hollow stem augers. Split barrel soil samples were obtained at 5-foot intervals beginning at land surface. Each boring was advanced to the top of bedrock as defined by auger refusal. An aliquot of each soil sample was retained for possible laboratory analysis. A second

aliquot was placed in a 1-pint glass jar, covered with aluminum foil, and allowed to equilibrate for a minimum of 10 minutes. The resulting headspace gas was then analyzed for the presence of VOCs using a Foxpro Microtip photoionization detector (PID). Based on results of the headspace analysis, the sample with the highest VOC concentration in each borehole was sent to the RMT laboratory to be analyzed for priority pollutant VOCs, using Method 8010. If no VOCs were detected with the PID, the sample from the bottom of the borehole was analyzed in the RMT laboratory. In addition, the sample having the highest headspace reading was also analyzed for the priority pollutant semivolatile organic compounds (SVOCs), using Method 8020. The laboratory analytical reports are presented in Appendix B. Upon completion, each boring was grouted from the bottom of the borehole to land surface as specified in the North Carolina Well Construction Standards.

3.2 Analytical Results

SB-1 was drilled to a depth of 25.5 feet before reaching auger refusal. The boring penetrated fill to a depth of 17 feet. From 19 to 23 feet below land surface, a mixture of heavily oxidized metal cuttings and soil was encountered. No auger cuttings were returned to the surface during drilling. This indicated the presence of void spaces within the fill. Saprolite soils were encountered below 23 feet. Low-level volatile organic vapors (5.8 to 39.2 ppm) emanated from the borehole during drilling. The sample with the highest headspace reading (23 to 25 feet below land surface) was sent to the RMT laboratory for analysis. The laboratory analysis indicated the presence of trichloroethene at a level of 0.002 ppm. This was the only VOC detected. A large interference signature was detected during the analysis for semivolatile compounds and was quantified as the PCB-Aroclor 1254 at a level of 500 ppm.

SB-2 was drilled to a depth of 33.5 feet before reaching auger refusal. The borehole penetrated fill to a depth of 7 feet below land surface. The fill was underlain by saprolite soils. Waste was not encountered in this borehole. Low-level (<20 ppm) volatile gases emanated from the borehole while the borehole was advanced from 25 to 30 feet below land surface. Based on headspace readings, the sample obtained at 28 to 30 feet was sent to the lab for analysis of VOCs (and PCBs as a result of the analysis of soil from SB-1). No VOCs or PCBs were detected from this sample.

SB-3 was drilled to a depth of 30.5 feet before reaching auger refusal. The borehole penetrated fill to a depth of 5 feet below land surface. The fill was underlain by saprolite soils. Waste was not encountered in this borehole. No volatile odors were detected during drilling activities. Based on

headspace readings, the sample for 30 to 30.5 feet was sent to the lab for analysis of VOCs. Toluene was detected at a level of 0.0003 ppm. The sample quantity was insufficient to allow further testing for PCBs.

A cross section depicting the geology and distribution of fill and waste debris along the east side of the Girmes facility is shown as Figure 3-1. Although waste materials were present in SB-1 at 19 to 23 feet below the surface, laboratory results indicate that saprolite close to the bedrock interface contains only trace amounts of soil gas. This suggests that a continuing source of trichloroethene in the unsaturated soils is no longer present.

3.3 Conclusions

Based on the analytical results obtained from the three soil borings, and given the length of time (approximately 20 years) that has passed since the discharge of VOCs to soils last occurred, it is reasonable to conclude that the source of VOCs in the soils is no longer present.

/usr3/hydro/7014401h/70144x03.sec
cgh 11-16-94

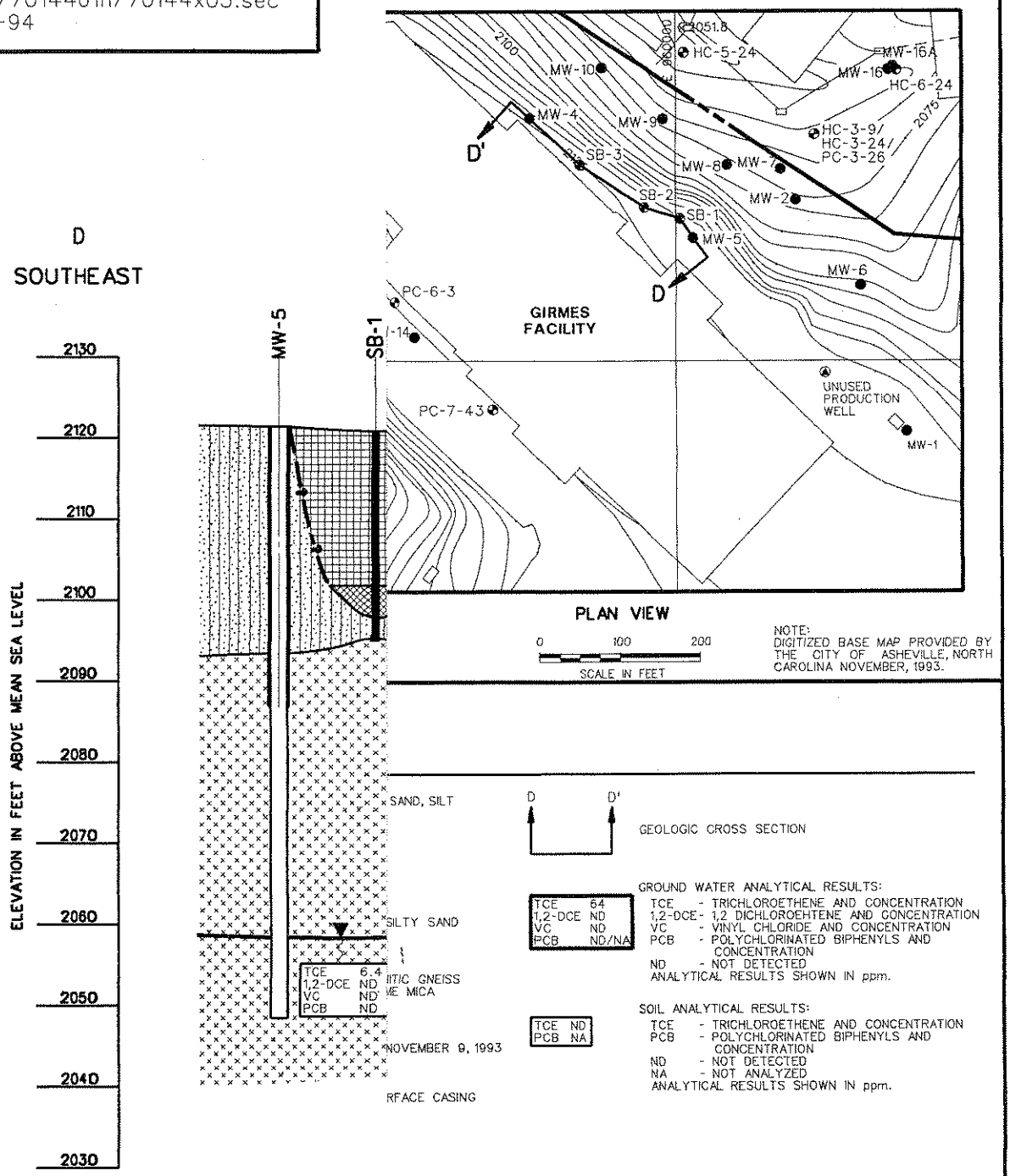

FIGURE 3-1

CROSS SECTION OF POTENTIAL SOURCE AREA

GIRMES SITE, formerly SKF USA
ASHEVILLE, NORTH CAROLINA

70144.02
1194

/usr3/hydro/7014401h/70144x03.sec
cgh 11-16-94

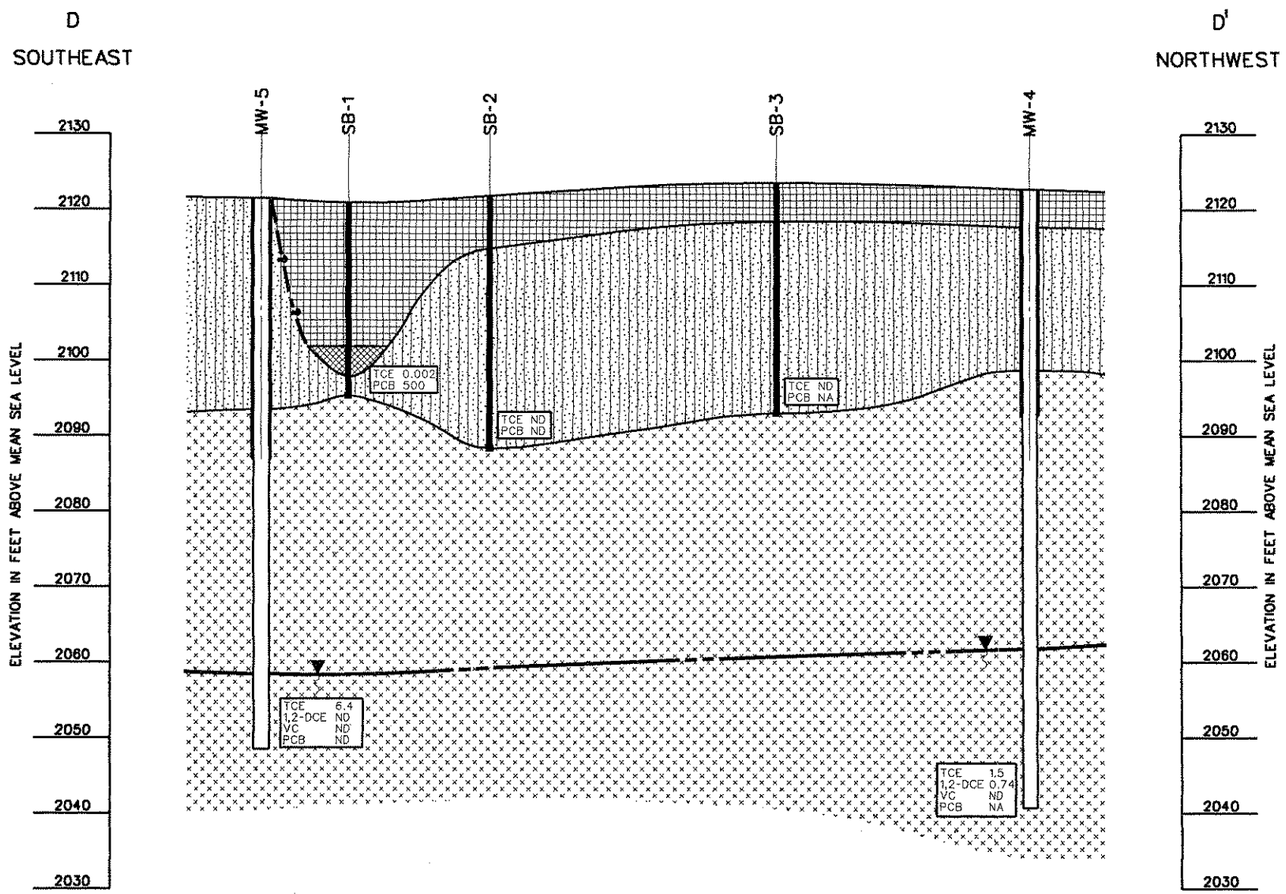

CROSS SECTION D - D'

0 25 50 75 100

HORIZONTAL SCALE IN FEET
VERTICAL SCALE AS SHOWN
VERTICAL EXAGGERATION 2.5X

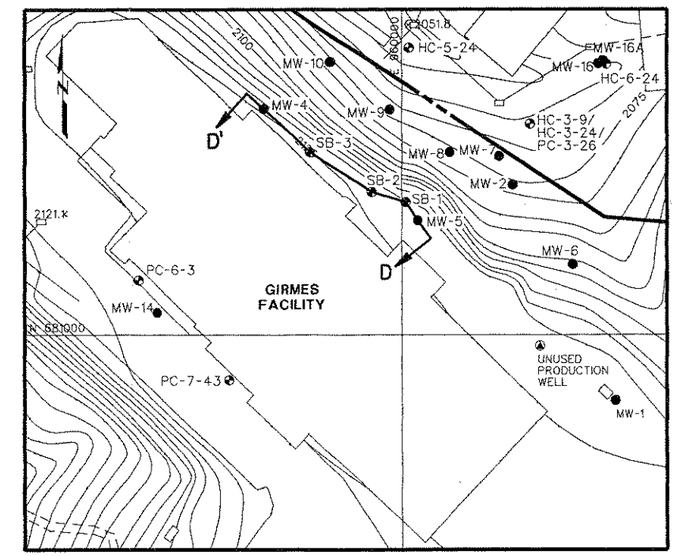

PLAN VIEW

0 100 200
SCALE IN FEET

NOTE:
DIGITIZED BASE MAP PROVIDED BY THE CITY OF ASHEVILLE, NORTH CAROLINA NOVEMBER, 1993.

LEGEND

FILL - CLAY, FINE GRAINED SAND, SILT

WASTE DEBRIS

SILTY SAND AND CLAYEY SILTY SAND (SAPROLITE)

BEDROCK - FOLIATED GRANITIC GNEISS AND AMPHIBOLITE WITH SOME MICA SCHIST

WATER TABLE SURFACE - NOVEMBER 9, 1993

OPEN HOLE WELL WITH SURFACE CASING

BORING

D D'
GEOLOGIC CROSS SECTION

TCE 64
1,2-DCE ND
VC ND
PCB ND/NA

GROUND WATER ANALYTICAL RESULTS:
TCE - TRICHLOROETHENE AND CONCENTRATION
1,2-DCE - 1,2 DICHLOROEHTENE AND CONCENTRATION
VC - VINYL CHLORIDE AND CONCENTRATION
PCB - POLYCHLORINATED BIPHENYLS AND CONCENTRATION
ND - NOT DETECTED
ANALYTICAL RESULTS SHOWN IN ppm.

TCE ND
PCB NA

SOIL ANALYTICAL RESULTS:
TCE - TRICHLOROETHENE AND CONCENTRATION
PCB - POLYCHLORINATED BIPHENYLS AND CONCENTRATION
ND - NOT DETECTED
NA - NOT ANALYZED
ANALYTICAL RESULTS SHOWN IN ppm.

FIGURE 3-1

CROSS SECTION OF POTENTIAL SOURCE AREA

GIRMES SITE, formerly SKF USA
ASHEVILLE, NORTH CAROLINA

RMT 70144.02
1194

Section 4
HYDROGEOLOGIC SETTING

4.1 Regional Geology

The Girmes site is located in Buncombe County, North Carolina, in the southeast area of Asheville (see Figure 1-1). The entire county lies within the Blue Ridge Physiographic Province which is typified by steep mountain ridges with high relief (100 to 3000 feet), frequent outcrops of bedrock, and valleys largely underlain by saprolite on crystalline rocks. Alluvium is generally confined to narrow flood plains with thicknesses of less than 100 feet. Colluvial deposits occur at the foot of steep slopes and consist of boulders and cobbles generated by mechanical weathering processes (Soller and Mills, 1991). The geology in the Asheville area has been identified as the Ashe Formation, which is a sequence of interlayered metasedimentary (gneisses, schists) and metavolcanic rocks (amphibolite) (Miller, Jr., 1990).

4.2 Site Geology

The site-specific geology has been assessed on the basis of boring logs prepared for nine monitoring wells (MW-1, MW-2, MW-4, MW-5, MW-6, MW-7, MW-8, MW-9, and MW-10) installed by Girmes and a prospective buyer of the site, and 19 monitoring wells (MW-11, MW-12, MW-13, MW-14, MW-15, MW-15A, MW-16, MW-16A, MW-17, MW-18, MW-19, MW-20, MW-21, MW-22, MW-23, MW-24, MW-25, MW-26, and MW-27) installed by SKF during the CSA. In addition, soil characteristics were measured at 11 locations on the Girmes, NC DOT, and Dotson properties using continuous downhole cone penetrometer soundings (Piezocone) during the Phase 1 investigation in August 1993, Phase 3 investigation in April 1994, and Phase 4 investigation in July-August 1994. Locations of borings and soundings are shown on Plate 1. Boring logs for wells installed by Girmes and the prospective buyer are provided in Appendix D. Boring logs for wells installed by SKF as part of the CSA are presented in Appendix B. Piezocone sounding test data are provided in Appendix E.

Three hydrogeologic cross sections were constructed to illustrate subsurface geology of the site. Cross section A-A' (Plate 2) depicts the geology from west to east beneath the Girmes site. Cross section B-B' (Plate 3) depicts the geology from north to south beneath the eastern end of the Girmes site and the west side of the NC DOT facility. Cross section C-C' (Plate 4) depicts the geology beneath the southwestern edge of the site.

The Girmes site sits on a northwest trending hill that is approximately 80 feet higher in elevation than the adjacent properties. The hill is composed of saprolite soils covering crystalline bedrock. Saprolite throughout the site consists of silts, silty sands, and clayey silty sands. The NC DOT facility is located in a drainage swale adjacent to the Girmes site. The NC DOT facility was constructed such that the original drainage in the swale was channeled into a concrete storm drain. The swale was subsequently covered with soil fill material cut from adjacent slopes. Fill material was present at all seven well locations and all five Piezocone locations at the NC DOT facility. Fill thickness ranged from 7 feet at well MW-15 to 24 feet at Piezocone sounding PC-5. Fill material consists primarily of sand, silt, and clayey soils. Piezocone data confirmed the nature and thickness of the fill material.

The Dotson facility is located in the floodplain of Gashes Creek. The alluvial deposits are composed of a silty sand layer underlain by a layer of gravel. The gravel layer is generally 5 feet thick and rests on saprolitic soils that are generally 10 feet in thickness.

Depth to bedrock beneath the Girmes facility ranges from 25 to 43 feet below land surface with bedrock surface dipping to the northeast, northwest, and southwest. At the NC DOT facility, depth to bedrock ranges from 33.5 feet below land surface at well MW-16A, to 65 feet below land surface at well MW-15A. Depth to bedrock in the vicinity of the Dotson facility ranges from 17.5 to 21 feet. The resistant bedrock that comprises the bulk of the hill underlying the Girmes facility is generally observed to be a competent green-black amphibolite gneiss. This type of rock is composed primarily of amphiboles interlayered with some felsic minerals. The lower flanks of the hill are composed of the amphibolite gneiss which appear to be interlayered with a mica schist and a felsic gneiss. Bedrock is primarily composed of mica schist in the vicinity of wells MW-4, MW-5, and MW-17 on the northeast side of the Girmes facility, and near MW-22 and MW-24 on the southwest side of the site. Minor pegamite and quartz dikes are also present. The bedrock observed during drilling along the southwestern edge of the site was found to be more fractured compared to bedrock observed on top of the ridge and on the NC DOT property.

4.3 Site Hydrogeology

Site hydrogeology is based on data obtained from 17 ground water monitoring wells located on the Girmes property, eight monitoring wells located at the NC DOT facility, and three monitoring wells at the Dotson facility. Monitoring well locations are shown on Plate 1. Monitoring wells MW-1, MW-2, MW-4,

MW-5, MW-6, MW-7, MW-8, MW-9, and MW-10 were installed prior to the CSA by Girmes and a prospective buyer. Well construction diagrams for wells MW-4, MW-5, MW-6, MW-7, MW-8, MW-9, and MW-10 are presented in Appendix F. There are no available well construction diagrams for wells MW-1 and MW-2. Wells MW-11 to MW-27 were installed by SKF as part of the CSA. Well construction diagrams for these wells are also presented in Appendix F. Pertinent monitoring well construction details are summarized in Table 4-1. Monitoring wells installed by SKF were constructed using methods described in Addendum 1 to the Workplan for Field Activities, Girmes Site, Formerly SKF, Ground Water Incident No. 10032, Buncombe County, North Carolina, dated September 28, 1993 (RMT, Inc. 1993).

4.3.1 Monitoring Well Installation

Of the 28 monitoring wells installed at these facilities, 13 are screened within saprolite, three are screened within alluvium, and 12 are screened in bedrock. Wells MW-1, MW-2, MW-4, MW-5, MW-6, MW-7, MW-8, MW-9, and MW-10 are screened at or near the water table surface. At the locations for wells MW-15 and MW-16, the zone of saturation within saprolite is approximately 53 and 26 feet thick; therefore, in accordance with the Workplan, well nests were installed at these locations. Wells MW-15 and MW-16 are water table wells and were installed near the observed water table surface. Screen lengths are 20 and 15 feet, respectively. Wells MW-15A and MW-16A were installed adjacent to the corresponding water table wells and extend to the top of bedrock. Screened lengths for these wells are 20 and 10 feet, respectively, with the bottom of the well screen placed at the point of auger refusal. MW-20 was placed in a sequence of fill and alluvium at the northern end of the NC DOT facility. The screened interval is 10 feet in length and brackets the observed water table. Since the zone of saturation within saprolite at well MW-13 is approximately 6 feet thick, it was installed with the entire saturated zone screened. The water table is below the bedrock surface on top of the ridge at the Girmes site (wells MW-4 and MW-5) and in the vicinity of wells MW-12 and MW-17 at the NC DOT facility. Consequently, MW-12 and MW-17 as well as MW-11 and MW-14, were installed in bedrock. At the locations for MW-18, MW-19, MW-21, MW-22, MW-24, and MW-27, the water table was observed to be of insufficient depth (less than 5 feet above the top of bedrock) to construct monitoring wells in saturated residuum or saprolite. Therefore, these wells were installed in bedrock. Screened intervals are 10 feet in length and were placed

TABLE 4-1

SUMMARY OF WELL CONSTRUCTION DETAILS

WELL NUMBER LOCATION CONSTRUCTED BY:	MW-1 GIRMES S&ME	MW-2 GIRMES S&ME	MW-4 GIRMES BPA	MW-5 GIRMES BPA	MW-6 GIRMES BPA	MW-7 GIRMES BPA	MW-8 GIRMES BPA
Date Installed	12/01/92	12/07/92	2/03/93	2/03/93	2/09/93	2/09/93	2/11/93
Well Diameter (inches)	2	2	5.875	5.875	2	2	2
Well Material	PVC [1]	PVC	PVC/OPEN [2]	PVC/OPEN	SS/PVC [3]	SS/PVC	SS/PVC
Screen Slot Size (inches)	0.01	0.01	OPEN HOLE	OPEN HOLE	0.01	0.01	0.01
Ground Surface Elevation [a]	2123.30	2074.80	2122.67	2121.87	2099.92	2068.02	2073.38
Top of Casing [a]	2123.16	2074.52	2122.38	2121.44	2102.22	2071.17	2075.22
Top of Bentonite Seal [b]	51.0	11.0	NA	NA	30.0	10.0	15.0
Screened Interval [b]	55.0-70.0	15.0-30.0	OPEN HOLE	OPEN HOLE	40.0-50.0	24.0-14.0	18.0-28.0
Total Depth [b]	70.0	30.0	82.0	73.0	50.0	24.0	28.0

[1] - Schedule 40 PVC screen and riser.
[2] - PVC surface casing, open hole in bedrock.
[3] - Type 304 stainless steel screen and Schedule 40 PVC riser.
[4] - Type 304 stainless steel screen and riser.
[a] - Elevations referenced to Mean Sea Level.
[b] - Depth below ground surface.
NA = Not Available
NOTE: Well construction information for MW-1, MW-2 obtained from Section 4.5 of S&ME report (S&ME, Inc., 1993).

TABLE 4-1 (Continued)

SUMMARY OF WELL CONSTRUCTION DETAILS

WELL NUMBER LOCATION CONSTRUCTED BY:	MW-9 GIRMES BPA	MW-10 GIRMES BPA	MW-11 GIRMES RMT	MW-12 NC DOT RMT	MW-13 NC DOT RMT	MW-14 GIRMES RMT	MW-15 NC DOT RMT
Date Installed	2/11/93	2/11/93	10/19/93	10/28/93	10/27/93	11/03/93	10/26/93
Well Diameter (inches)	2	2	2	2	2	2	2
Well Material	SS/PVC	SS/PVC	SS [4]	SS	SS	SS	SS
Screen Slot Size (inches)	0.01	0.01	0.01	0.01	0.01	0.01	0.01
Ground Surface Elevation [a]	2069.77	2073.71	2107.04	2040.92	2041.47	2120.03	2058.64
Top of Casing [a]	2072.29	2076.30	2109.60	2040.65	2044.67	2119.88	2058.15
Top of Bentonite Seal [b]	23.5	16.0	52.0	23.5	0.75	60.4	8.0
Screened Interval [b]	27.0-37.0	20.0-30.0	61.0-81.0	19.5-29.22	6.84-16.55	64.83-79.83	12.0-32.0
Total Depth [b]	37.0	30.0	81.0	29.5	19.0	80.3	33.0

[1] - Schedule 40 PVC screen and riser.
[2] - PVC surface casing, open hole in bedrock.
[3] - Type 304 stainless steel screen and Schedule 40 PVC riser.
[4] - Type 304 stainless steel screen and riser.
[a] - Elevations referenced to Mean Sea Level.
[b] - Depth below ground surface.
NA = Not Available

TABLE 4-1 (Continued)

SUMMARY OF WELL CONSTRUCTION DETAILS

WELL NUMBER LOCATION CONSTRUCTED BY:	MW-15A NC DOT RMT	MW-16 NC DOT RMT	MW-16A NC DOT RMT	MW-17 NC DOT RMT	MW-18 GIRMES RMT	MW-19 GIRMES RMT	MW-20 NC DOT RMT
Date Installed	10/21/93	11/03/93	11/01/93	10/29/93	04/14/94	04/13/94	04/13/94
Well Diameter (inches)	2	2	2	2	2	2	2
Well Material	SS	SS	SS	SS	SS	SS	SS
Screen Slot Size (inches)	0.01	0.01	0.01	0.01	0.01	0.01	0.01
Ground Surface Elevation [a]	2058.55	2059.40	2059.48	2057.09	2033.80	2038.50	2027.56
Top of Casing [a]	2058.16	2059.23	2059.22	2056.71	2036.36	2037.74	2027.36
Top of Bentonite Seal [b]	40.0	3.0	21.2	17.4	8.5	16.5	8.0
Screened Interval [b]	44.0-64.0	7.0-22.0	24.0-34.0	20.0-30.0	13.5-23.5	20.4-30.4	13.0-23.0
Total Depth [b]	65.0	25.0	34.5	32.0	25.0	31.0	23.0

[1] - Schedule 40 PVC screen and riser.
[2] - PVC surface casing, open hole in bedrock.
[3] - Type 304 stainless steel screen and Schedule 40 PVC riser.
[4] - Type 304 stainless steel screen and riser.
[a] - Elevations referenced to Mean Sea Level.
[b] - Depth below ground surface.
NA = Not Available

TABLE 4-1 (Continued)

SUMMARY OF WELL CONSTRUCTION DETAILS

WELL NUMBER LOCATION CONSTRUCTED BY:	MW-21 GIRMES RMT	MW-22 GIRMES RMT	MW-23 DOTSON RMT	MW-24 GIRMES RMT	MW-25 DOTSON RMT	MW-26 DOTSON RMT	MW-27 GIRMES RMT	PRODUCTION WELL DOTSON CALDWELL
Date Installed	4/14/94	4/18/94	8/04/94	8/05/94	8/04/94	8/03/94	8/09/94	5/22/72
Well Diameter (inches)	2	2	2	2	2	2	2	6.25
Well Material	SS	SS	SS	SS	SS	SS	SS	OPEN HOLE
Screen Slot Size (inches)	0.01	0.01	0.01	0.01	0.01	0.01	0.01	OPEN HOLE
Ground Surface Elevation [a]	2033.90	2082.40	2025.17	2033.08	2024.58	2020.98	2048.81	2020.32
Top of Casing [a]	2036.58	2082.12	2024.76	2035.05	NA	2020.83	2051.08	2021.28
Top of Bentonite Seal [b]	13.5	32.0	16.0	17.7	1.5	4.5	23.1	OPEN HOLE
Screened Interval [b]	17.0-27.0	46.5-56.5	21.6-31.1	21.7-31.7	5.0-15.0	8.7-18.7	27.4-37.7	OPEN HOLE
Total Depth [b]	28.0	56.5	31.6	37.5	18.5	19.0	38.0	115.0

[1] - Schedule 40 PVC screen and riser.
[2] - PVC surface casing, open hole in bedrock.
[3] - Type 304 stainless steel screen and Schedule 40 PVC riser.
[4] - Type 304 stainless steel screen and riser.
[a] - Elevations referenced to Mean Sea Level.
[b] - Depth below ground surface.
NA - Not available.

opposite water-bearing zones as determined during drilling. MW-25 and MW-26 were installed to monitor ground water in alluvium and saprolite above bedrock on the Dotson property. The screened intervals are 10 feet in length and were placed such that the screens bracketed the sequence of alluvium and saprolite.

4.3.2 Water Table

Ground water elevations obtained from monitoring wells screened in saprolite and bedrock, the unused production well #1 (Dotson), and a surface water elevation measured in Gashes Creek (SG-1) were used to construct the water table map shown on Plate 5. Table 4-2 summarizes the ground water elevations measured on September 19, 1994. The map shows that the water table mimics the ground topography. Ground water is recharged from the topographically higher area at the southeast end of the Girmes site, and flows northwest along the ridge. The ridge acts as a ground water divide and directs a portion of ground water flow southwest towards Gashes Creek and a portion of ground water flow north and northeast towards the NC DOT facility. Ground water at the NC DOT facility flows northwest towards the Swannanoa River, where it is expected to discharge. On the southwest side of the Girmes site, ground water flows towards Gashes Creek where some portion of flow is expected to discharge. Ground water on the Dotson property flows in a northeasterly direction towards Gashes Creek.

4.3.3 Hydraulic Gradients

Horizontal ground water gradients range from 0.074 ft/ft on the northeast side of the Girmes site, to 0.084 ft/ft on the southwest side of the Site. Across the creek, gradients are very low, as evidenced by the low topographic relief. The gradient calculated in the vicinity of MW-25 is only 0.0067 ft/ft. At the NC DOT facility, gradients range from 0.014 ft/ft in the vicinity of MW-16, to 0.069 ft/ft near MW-13.

Water levels measured at the nested well pairs MW-15/MW-15A and MW-16/MW-16A were used to calculate vertical ground water gradients using the following formula that was modified from Freeze and Cherry (1979):

TABLE 4-2

SUMMARY OF GROUND WATER ELEVATIONS
SEPTEMBER 19, 1994

LOCATION	WATER LEVEL[a]	TOP OF CASING[b]	WATER TABLE ELEVATION [b]
MW-1	56.50	2123.16	2066.66
MW-2	21.13	2074.52	2053.39
MW-4	60.08	2122.38	2062.30
MW-5	62.70	2121.44	2058.74
MW-6	43.27	2102.22	2058.95
MW-7	17.85	2071.17	2053.32
MW-8	22.75	2075.22	2052.47
MW-9	20.90	2072.29	2051.39
MW-10	23.92	2076.30	2052.38
MW-11	62.31	2109.60	2047.29
MW-12	6.00	2040.65	2034.65
MW-13	10.60	2044.67	2034.07
MW-14	67.64	2119.88	2052.24
MW-15	11.85	2058.15	2046.30
MW-15A	11.30	2058.16	2046.86
MW-16	6.38	2059.22	2052.84
MW-16A	6.23	2059.33	2053.10
MW-17	9.75	2056.71	2046.96
MW-18	13.61	2036.36	2022.75
MW-19	21.45	2037.74	2016.29
MW-20	14.30	2027.36	2013.06
MW-21	13.55	2036.58	2023.03
MW-22	42.81	2082.12	2039.31
MW-23	4.80	2024.76	2019.96
MW-24	14.43	2035.05	2020.62
MW-25	9.65	2029.01	2019.36
MW-26	2.39	2020.83	2018.44
MW-27	26.94	2051.08	2024.14
SG-1 [c]	2.93	2021.89	2018.96
DOTSON PRODUCTION WELL	2.85	2021.13	2018.28

[a] - measured in feet below Top of Casing.
[b] - measured in feet above Mean Sea Level.
[c] - SG-1 is a 3-foot staff gauge.

$$i_{s/d} = \frac{E3d - E3s}{\left[\left(\frac{E(1 \vee 3)^{*}s - E2s}{2}\right) + E2s\right] - \left[\left(\frac{E(1 \vee 3)^{*}d - E2d}{2}\right) + E2d\right]}$$

Where:

$i_{s/d}$	=	vertical gradient
E1d	=	elevation of bottom of bentonite seal (deep well)
E2s	=	elevation of bottom of well screen (shallow well)
E2d	=	elevation of bottom of well screen (deep well)
E3s	=	elevation of water level (shallow well)
E3d	=	elevation of water level (deep well)

* Use E1 or E3, whichever is the lower value

The denominator in this formula has been modified to adjust for the presence of a screened interval rather than a single water level monitoring point. A positive vertical gradient indicates that the ground water flow has an upward component, and a negative vertical gradient indicates that the ground water flow has a downward ground water flow component.

Based on September 19, 1994, water level measurements, the well pair MW-15/MW-15A had a positive vertical gradient of 0.027 ft/ft, and well pair MW-16/MW-16A had a positive vertical gradient of 0.019 ft/ft. This finding indicates that ground water at the NC DOT site has an upward flow component which is in accordance with the conceptual model of topographically lower areas being ground water discharge points.

4.3.4 Hydraulic Conductivity

A single well response test (slug test) was performed on each monitoring well during the CSA for the purpose of identifying differences in hydraulic conductivity across the Site. In addition, hydraulic conductivity measurements were obtained during the field screening surveys from Hydrocone® sample locations. A summary of hydraulic conductivity values from each monitoring well and Hydrocone® sample location is shown in Tables 4-3 and 4-4, respectively.

Monitoring well hydraulic conductivity (K) values were calculated using software developed by RMT. The software is based on the Bouwer and Rice Method (Bouwer and Rice, 1976;

TABLE 4-3

SUMMARY OF HYDRAULIC CONDUCTIVITY MEASUREMENTS MONITORING WELLS

WELL	AQUIFER	CM/SEC	FT/SEC
NC DOT/GIRMES			
MW-20	Fill/Alluvium	$1x10^{-5}$	$5x10^{-7}$
MW-1	Upper Saprolite	$4x10^{-4}$	$1x10^{-5}$
MW-2	Upper Saprolite	$2x10^{-4}$	$6x10^{-6}$
MW-6	Upper Saprolite	$2x10^{-4}$	$8x10^{-6}$
MW-7	Upper Saprolite	$2x10^{-4}$	$8x10^{-6}$
MW-8	Upper Saprolite	$4x10^{-4}$	$1x10^{-5}$
MW-9	Upper Saprolite	$3x10^{-5}$	$1x10^{-6}$
MW-15	Upper Saprolite	$7x10^{-4}$	$2x10^{-5}$
MW-16	Upper Saprolite	$1x10^{-3}$	$3x10^{-5}$
MW-10	Lower Saprolite	$2x10^{-5}$	$8x10^{-7}$
MW-13	Lower Saprolite	$4x10^{-3}$	$1x10^{-4}$
MW-15A	Lower Saprolite	$2x10^{-5}$	$8x10^{-7}$
MW-16A	Lower Saprolite	$9x10^{-4}$	$3x10^{-5}$
MW-4	Bedrock	$8x10^{-6}$	$3x10^{-7}$
MW-5	Bedrock	$6x10^{-5}$	$2x10^{-6}$
MW-11	Bedrock	$1x10^{-5}$	$4x10^{-7}$
MW-12	Bedrock	$5x10^{-5}$	$2x10^{-6}$
MW-14	Bedrock	$1x10^{-4}$	$4x10^{-6}$
MW-17	Bedrock	$1x10^{-4}$	$3x10^{-6}$
DOTSON/GIRMES			
MW-25	Alluvium/Saprolite	$4x10^{-4}$	$1x10^{-5}$
MW-26	Alluvium/Saprolite	$5x10^{-4}$	$2x10^{-5}$
MW-18	Bedrock	$3x10^{-5}$	$1x10^{-6}$
MW-19	Bedrock	$8x10^{-5}$	$3x10^{-6}$
MW-21	Bedrock	$1x10^{-5}$	$3x10^{-7}$
MW-22	Bedrock	$4x10^{-4}$	$1x10^{-5}$
MW-23	Bedrock	$5x10^{-4}$	$2x10^{-5}$
MW-24	Bedrock	$8x10^{-5}$	$3x10^{-6}$
MW-27	Bedrock	$2x10^{-4}$	$8x10^{-6}$

TABLE 4-4

SUMMARY OF HYDRAULIC CONDUCTIVITY MEASUREMENTS HYDROCONE® SAMPLE LOCATIONS

SAMPLE LOCATION	AQUIFER	CM/SEC	FT/SEC
NC DOT			
HC-1-19	Saprolite	$2x10^{-3}$	$1x10^{-4}$
HC-2-19	Saprolite	$5x10^{-4}$	$2x10^{-5}$
HC-3-9	Saprolite	$3x10^{-3}$	$1x10^{-4}$
HC-5-29	Saprolite	$2x10^{-4}$	$7x10^{-6}$
HC-6-24	Saprolite	$6x10^{-4}$	$2x10^{-5}$
HC-7-24	Saprolite	$2x10^{-3}$	$8x10^{-5}$
HC-8-24	Saprolite	$7x10^{-5}$	$2x10^{-6}$
DOTSON			
HC-10-15	Alluvium/Saprolite	$4x10^{-5}$	$1x10^{-6}$
HC-11-16	Alluvium/Saprolite	$1x10^{-4}$	$3x10^{-6}$
HC-12-12.5	Alluvium/Saprolite	$3x10^{-4}$	$1x10^{-5}$
HC-14-12.5	Alluvium/Saprolite	$7x10^{-5}$	$2x10^{-6}$
HC-15-13	Alluvium/Saprolite	$5x10^{-5}$	$2x10^{-6}$
HC-16-13	Alluvium/Saprolite	$5x10^{-5}$	$2x10^{-6}$
HC-17-13	Alluvium/Saprolite	$3x10^{-6}$	$1x10^{-7}$
HC-18-13	Alluvium/Saprolite	$6x10^{-5}$	$2x10^{-6}$

Bouwer, 1989). Hydrocone® K values are calculated by proprietary software developed by *In-Situ* Technology, Inc. The values of K for monitoring wells screened in saprolite and located on Girmes property range from $1x10^{-5}$ ft/sec to $8x10^{-7}$ ft/sec; the geometric mean is $4x10^{-6}$ ft/sec. Values of K for monitoring wells screened in bedrock and located on Girmes/DOT property range from $4x10^{-6}$ ft/sec to $3x10^{-7}$ ft/sec; the geometric mean is $1x10^{-6}$ ft/sec. Values of K for monitoring wells and Hydrocone® locations screened in saprolite, and located on NC DOT property, range from $1x10^{-4}$ ft/sec to $5x10^{-7}$ ft/sec. The geometric mean of both Hydrocone® locations and monitoring wells on NC DOT property is $2x10^{-5}$ ft/sec.

Values of K for monitoring wells and Hydrocone® locations screened in alluvium/saprolite and located on Dotson property ranged from $1x10^{-5}$ ft/sec to $1x10^{-7}$ ft/sec; the geometric mean is $3x10^{-5}$ ft/sec. Values of K for monitoring wells screened in bedrock on the southwest side of the Girmes site range from $1x10^{-5}$ ft/sec to $3x10^{-7}$ ft/sec; the geometric mean is $3x10^{-6}$ ft/sec. There are no monitoring wells screened in saprolite on the southwest side of the Girmes site. Values of K calculated for bedrock monitoring wells on the southwest side of the site are generally higher than those on top of the ridge and those which are located on the northeast side of the site. The competent rocks which make up the core of the ridge have not been as weathered by mechanical and chemical processes as the rocks located at the base of the ridge on the southwest side of the site. Thus, the bedrock on the southwest side is more conductive. Hydraulic conductivity test results are included in Appendix G.

4.3.5 Seepage Velocity

The seepage velocity of ground water was calculated for each area of the Site. An average hydraulic gradient was determined from the water table contour lines shown on Plate 5. The effective porosity of saprolite and bedrock was estimated to be 30% and 10%, respectively (Freeze and Cherry, 1979). The geometric mean of the hydraulic conductivity for the appropriate medium (saprolite or bedrock) was also used in each calculation. Calculations are shown in Appendix H.

Seepage velocities of ground water in saprolite soils on the northeast side of the Girmes site range from 31 ft/yr on the Girmes site to a high of 145 ft/yr on the northwest portion of the NC DOT property. The higher velocity on the NC DOT property is due primarily to the more conductive soils found there. The seepage velocity in bedrock on the northeast side of the Girmes site is 23 ft/yr.

On the southwest side of the Girmes site, the average seepage velocity of ground water in bedrock was calculated to be 79 ft/yr. The higher seepage velocity observed on this side of the Site may be due to a higher degree of fracturing in the bedrock, and/or the presence of a different rock unit (mica schist) which may be more conductive.

The seepage velocity in the alluvium/saprolite aquifer on the Dotson property was estimated to be 21 ft/yr. This is due in part to the very low gradient observed in the flood plain. However, heterogeneities in the alluvium portion may impart a much higher velocity than has been estimated.

Section 5
GROUND WATER QUALITY

Ground water quality information has been obtained from 16 *in-situ* ground water samples employing the Hydrocone® system and 28 monitoring wells installed on Girmes, NC DOT, and Dotson property. These data were obtained during the four phases of the CSA.

5.1 Phase 1 Ground Water Field Screening - NC DOT Property

During the period of August 16-24, 1993, *in situ* ground water samples were collected on NC DOT property downgradient of the Girmes site to assess the lateral extent of VOCs in ground water. The *in-situ* ground water samples were collected either at specific intervals or at point of tool refusal at eight locations (HC-1, HC-2, HC-3, HC-5, HC-6, HC-7, HC-8, HC-9). Additional ground water samples were collected just below the water table at two locations (HC-2 and HC-3) to assess shallow ground water quality. This work was described in the July 1993 Workplan as Phase 1.

5.1.1 *In-Situ* Sampling Methods

The Piezocone sampler probe was used to measure soil properties at seven locations. During insertion the probe measures point stress (kg/cm^2), sleeve friction (kg/cm^2), and pore pressure (kg/cm^2) at 1 cm intervals. Software developed by *In-Situ* Technology, Inc., converts the data to a soil behavior chart showing Unified Soil Classification System (USCS) soil type and comparative Standard Penetration Test (SPT) blow counts. Results are shown in Appendix E. Discrete intervals were identified on the basis of soil type (sandy or clayey) in order to acquire ground water samples from layers that exhibited a potentially higher hydraulic conductivity. Piezocone locations shown on Plate 1 are identified by the letters "PC" followed by the location number and depth of tool refusal. The Hydrocone® sampling system was then used to acquire ground water samples at eight locations. Sample locations are shown on Plates 1 and 5 and are identified by the letters "HC" followed by the location number and the sample collection depth. The Hydrocone® probe was first pushed to the desired depth. Ground water then filled a sample chamber at the base of the probe. The chamber was pressurized with argon gas and the probe lifted to the surface. Upon reaching the surface, the ground water sample was drained from the chamber directly into 40-ml septum vials. A portion of each sample was analyzed on-site for trichloroethene and 1,2-dichloroethene using a Photovac Model 10S70

portable gas chromatograph (GC) with a 10.6 e.v. photoionization detector. An aliquot of the sample (usually 2 milliliters) was injected into a closed 40-ml septum vial. After allowing approximately 10 minutes for volatile organic compounds in the water to equilibrate with the headspace in the vial, the sample was analyzed by withdrawing an aliquot from the vial headspace and injecting it into the GC.

5.1.2 Field Investigation

In situ ground water samples were initially collected at three locations (HC-1, HC-2, HC-3) that were anticipated to be downgradient and outside the affected ground water plume. On the basis of the field screening results of the initial samples, additional samples were collected (HC-5, HC-6, HC-7, HC-8) until the north and northeast edges of the plume were identified. After *in situ* ground water sampling and screening were completed, the ground water samples collected just outside of the plume (HC-1-19, HC-2-19, HC-8-24) and the ground water sample collected at the location having the highest concentration of trichloroethene (HC-5-24) were sent to the RMT laboratory to be analyzed for trichloroethene, 1,2-dichloroethene, and vinyl chloride. The remaining samples were discarded. Laboratory analytical reports for samples analyzed at the laboratory are presented in Appendix I.

5.1.3 Field Screening Results

Table 5-1 summarizes the results of the Phase 1 investigation and the distribution of dissolved VOCs are illustrated on the isoconcentration maps, Plates 9 and 10. Trichloroethene was detected at three sample locations on the NC DOT property. Samples collected at HC-3 contained 0.011 ppm of trichloroethene (9 feet below surface) and 0.026 ppm trichloroethene (24 feet below land surface). Trichloroethene was detected in a sample collected at HC-5 (29 feet below land surface) at a level of 2.1 ppm. 1,2-Dichloroethene was also detected at a level of 0.42 ppm at HC-5. The field analyses for sample HC-5 (29 feet below land surface) was confirmed by the laboratory analyses which showed 3.6 ppm of trichloroethene and 0.66 ppm of 1,2-dichloroethene. Trichloroethene was detected in a sample collected at HC-7 at a level of 0.035 ppm (24 feet below surface). Trichloroethene, 1,2-dichloroethene, and vinyl chloride were not detected in field analyses of samples collected at HC-1, HC-2, HC-6 and HC-8. VOCs were also not detected in the laboratory analysis of samples obtained at HC-1-19, HC-2-19, and HC-8-24. Plate 1 shows the locations of these sample points.

TABLE 5-1

PHASE 1 - SUMMARY OF GROUND WATER SCREENING RESULTS
August 16 - 24, 1993

SAMPLE NO.	SAMPLE DEPTH (FT)	TRICHLOROETHENE (PPM)		1,2-DICHLOROETHENE (TOTAL) (PPM)		VINYL CHLORIDE (PPM)	
		Field	Lab	Field	Lab	Field	Lab
HC-1	19	<0.001	<0.002	<0.001	<0.002	NA	<0.001
HC-2	9	<0.001	NA	<0.001	NA	NA	NA
HC-2	19	<0.001	<0.002	<0.001	<0.002	NA	<0.001
HC-3	9	0.011	NA	<0.001	NA	NA	NA
HC-3	24	0.026	NA	<0.001	NA	NA	NA
HC-5	29	2.1	3.6	0.42	0.66	NA	<0.100
HC-6	24	<0.001	NA	<0.001	NA	NA	NA
HC-7	24	0.035	NA	<0.001	NA	NA	NA
HC-8	24	<0.001	<0.002	<0.001	<0.002	NA	<0.001

NA - Not analyzed

5.1.4 Conclusions

As a result of the Phase 1 investigation, the extent of the VOC plume to the northeast and north was initially defined. The downgradient extent of the plume was not defined due to subsurface obstructions encountered at locations in the northwest area of the NC DOT facility.

5.2 Phase 2 Ground Water Quality Results

As part of the Phase 2 ground water investigation, nine ground water monitoring wells were installed. Well locations are shown on Plate 1. Seven wells, MW-12, 13, 15, 15A, 16, 16A, and 17, were installed on NC DOT property to confirm the northeast extent of the plume and to determine the extent of the plume downgradient to the northwest. In addition, one well, MW-11, was installed at the Girmes site to assess the northwest edge of the plume on the ridge, and one well, MW-14, was installed on the southwest side of the Girmes site to assess general ground water quality on that side of the facility.

5.2.1 Ground Water Sampling

Ground water samples were collected from all 18 monitoring wells during November 1993. Sampling and chain-of-custody procedures were conducted as described in Appendix B of Addendum 1 to the Workplan for Field Activities, Girmes Site, Formerly SKF, Ground Water Incident No. 10032, Buncombe County, North Carolina, dated September 28, 1993 (RMT, Inc., 1993). Samples were analyzed for priority pollutant VOCs using Method 8010/8020. In addition, ground water from four wells, MW-5, MW-7, MW-9, and MW-10 was analyzed for PCBs since the PCB Aroclor-1254 had been detected in one subsurface soil sample collected near the Girmes facility (Boring SB-1 on Plate 1). These wells are located adjacent to and downgradient of that soil sample location. The samples were analyzed to assess whether ground water had been affected by PCBs. Table 5-2 summarizes the analytical results. Table 5-3 presents a summary of the field indicator parameters: pH, temperature, and specific conductance. Appendix I presents the laboratory analytical reports.

5.2.2 Analytical Results

Trichloroethene and 1,2-dichloroethene are the primary constituents detected in ground water. Isoconcentration maps of trichloroethene and 1,2-dichloroethene concentrations are shown on Plates 6, 7, 8, 9, 10, 11, 12, and 13. The maps show the approximate limits of the trichloroethene and 1,2-dichloroethene plume within ground water.

TABLE 5-2

SUMMARY OF PARAMETERS DETECTED IN GROUND WATER MONITORING WELLS[a]
NOVEMBER 9 - 30, 1993

VOLATILE ORGANICS	NC 2L STANDARD (ppm)	LOCATION/SAMPLE DATE								
		MW-1 30-Nov-93	MW-2 30-Nov-93	MW-4 12-Nov-93	MW-5 12-Nov-93	MW-6 30-Nov-93	MW-7 30-Nov-93	MW-8 30-Nov-93	MW-9 30-Nov-93	MW-10 30-Nov-93
Chloroform	0.00019	<0.001	<0.005	<0.10	<0.25	<0.001	<0.001	0.0014	<0.20	<0.050
1,1-Dichloroethane	0.70	<0.001	<0.005	<0.10	<0.25	<0.001	<0.001	<0.001	<0.20	<0.050
1,1-Dichloroethene	0.007	<0.001	<0.005	<0.10	<0.25	<0.001	<0.001	<0.001	<0.20	<0.050
1,2-Dichloroethene, total	0.070	<0.002	0.025	0.74	<0.50	<0.002	0.0038	<0.002	<0.40	1.2
1,1,1-Trichloroethane	0.20	<0.002	<0.010	<0.20	<0.50	<0.002	<0.002	<0.002	<0.40	<0.10
Trichloroethene	0.0028	<0.002	0.11	1.5	6.4	<0.002	0.014	<0.002	3.0	0.22
Vinyl chloride	0.000015	<0.001	<0.005	<0.10	<0.25	<0.001	<0.001	<0.001	<0.20	<0.050
PCBs										
Aroclor-1016		NA	NA	NA	<0.0011	NA	<0.0011	NA	<0.0011	<0.0011
Aroclor-1221		NA	NA	NA	<0.0021	NA	<0.0021	NA	<0.0021	<0.0021
Aroclor-1232		NA	NA	NA	<0.0011	NA	<0.0011	NA	<0.0011	<0.0011
Aroclor-1242		NA	NA	NA	<0.0011	NA	<0.0011	NA	<0.0011	<0.0011
Aroclor-1248		NA	NA	NA	<0.0011	NA	<0.0011	NA	<0.0011	<0.0011
Aroclor-1254		NA	NA	NA	<0.0011	NA	<0.0011	NA	<0.0011	<0.0011
Aroclor-1260		NA	NA	NA	<0.0011	NA	<0.0011	NA	<0.0011	<0.0011

a - Analytical results are reported in parts per million (ppm).
< (Organics) - Concentration less than the Method Quantitation Limit.
NA - Not analyzed.

TABLE 5-2 (Continued)

SUMMARY OF PARAMETERS DETECTED IN GROUND WATER MONITORING WELLS
NOVEMBER 9 - 30, 1993

VOLATILE ORGANICS	NC 2L STANDARD (ppm)	LOCATION/SAMPLE DATE										
		MW-11 12-Nov-93	MW-12 29-Nov-93	MW-13 29-Nov-93	MW-14 30-Nov-93	MW-15 30-Nov-93	MW-15A 11-Nov-93	MW-16 29-Nov-93	MW-16A 29-Nov-93	MW-17 30-Nov-93	MW-17(DUP) 30-Nov-93	UNUSED PRODUCTION WELL 12-Nov-93
Chloroform	0.00019	<0.001	<0.001	<0.001	<0.050	0.0013	0.0055	<0.001	<0.001	<0.001	<0.001	<0.001
1,1-Dichloroethane	0.70	<0.001	<0.001	0.0047	<0.050	0.0014	0.001	<0.001	<0.001	<0.001	<0.001	<0.001
1,1-Dichloroethene	0.007	<0.001	<0.001	<0.001	<0.050	0.0025	0.0013	<0.001	<0.001	<0.001	<0.001	<0.001
1,2-Dichloroethene, total	0.070	<0.002	<0.002	<0.002	<0.10	<0.002	<0.002	<0.002	<0.002	<0.002	<0.002	<0.002
1,1,1-Trichloroethane	0.20	<0.002	<0.002	<0.002	<0.10	0.015	<0.005	<0.002	<0.002	<0.002	<0.002	<0.002
Trichloroethene	0.0028	<0.002	<0.002	<0.002	0.52	<0.002	<0.002	<0.002	<0.002	0.0075	0.0076	<0.002
Vinyl chloride	0.000015	<0.001	<0.001	0.029	<0.050	<0.001	<0.001	<0.001	<0.001	<0.001	<0.001	<0.001
PCBs												
Aroclor-1016		NA	NA	NA	NA	NA	NA	NA	NA	NA	NA	NA
Aroclor-1221		NA	NA	NA	NA	NA	NA	NA	NA	NA	NA	NA
Aroclor-1232		NA	NA	NA	NA	NA	NA	NA	NA	NA	NA	NA
Aroclor-1242		NA	NA	NA	NA	NA	NA	NA	NA	NA	NA	NA
Aroclor-1248		NA	NA	NA	NA	NA	NA	NA	NA	NA	NA	NA
Aroclor-1254		NA	NA	NA	NA	NA	NA	NA	NA	NA	NA	NA
Aroclor-1260		NA	NA	NA	NA	NA	NA	NA	NA	NA	NA	NA

a - Analytical results are reported in parts per million (ppm).
< (Organics) - Concentration less than the Method Quantitation Limit.
NA - Not analyzed.

TABLE 5-3

SUMMARY OF FIELD INDICATOR PARAMETERS
November 9 - 30, 1993

LOCATION	TEMP °C	pH s.u.[a]	SPECIFIC [b] CONDUCTANCE
MW-1	15.7	6.4	42
MW-2	12.8	5.6	68
MW-4	15.1	6.1	200
MW-5	16.4	5.9	180
MW-6	13.8	6.2	37
MW-7	13.6	5.7	62
MW-8	13.8	6.2	310
MW-9	13.0	6.1	210
MW-10	12.6	5.9	160
MW-11	14.5	6.8	180
MW-12	15.0	6.4	140
MW-13	15.5	6.0	230
MW-14	17.0	6.7	300
MW-15	17.9	3.8	2100
MW-15A	16.4	5.2	2200
MW-16	17.0	5.1	3200
MW-16A	15.4	4.7	3800
MW-17	14.4	6.0	130
Girmes Unused Production Well	15.2	7.0	130

[a] Standard units
[b] Units are µmhos/cm, adjusted to 25°C

The highest concentrations of trichloroethene were detected in ground water samples obtained from bedrock well MW-5 and saprolite well MW-9 at 6.4 and 3.0 ppm, respectively. 1,2-Dichloroethene was not detected in either well. These wells are located adjacent to and downgradient of the area where waste debris may have been disposed.

The ground water sample obtained from bedrock well MW-4 had a trichloroethene concentration of 1.5 ppm and a 1,2-dichloroethene concentration of 0.74 ppm. The ground water sample obtained from saprolite well MW-10, located 110 feet downgradient, had trichloroethene and 1,2-dichloroethene at concentrations of 0.22 and 1.2 ppm, respectively.

The ground water sample obtained from saprolite monitoring wells MW-2 and MW-7, located downgradient of well MW-5, had trichloroethene concentrations of 0.11 ppm and 0.014 ppm, respectively, and 1,2-dichloroethene concentrations of 0.025 ppm and 0.0038 ppm, respectively. The ground water sample obtained from saprolite monitoring well MW-8, located approximately 40 feet from MW-7, had no detection of VOCs.

The ground water sample obtained from bedrock monitoring well MW-17 had a trichloroethene concentration of 0.0075 ppm. This well is located on NC DOT property approximately 530 feet downgradient (northwest) of well MW-5. No trichloroethene or 1,2-dichloroethene was detected in ground water obtained from saprolite well MW-13 located 150 feet downgradient of MW-17; however, vinyl chloride was detected at a concentration of 0.029 ppm. This was the only detection of vinyl chloride, and it may be the result of degradation of trichloroethene and 1,2-dichloroethene. MW-13 was resampled in March 1994, and showed a vinyl chloride concentration of 0.027 ppm, and a 1,2-dichloroethene concentration of 0.0056 ppm.

Trichloroethene concentrations in ground water can be reduced as a result of chemical and biological degradation. The principal biological degradation products of trichloroethene are 1,2-dichloroethene and vinyl chloride. Samples collected from saprolite monitoring wells MW-2, MW-7, and MW-10 had 1,2-dichloroethene concentrations of 0.025, 0.0038, and 1.2 ppm, respectively. Given that 1,2-dichloroethene was not used at the site, the concentration of 1,2-dichloroethene (1.2 ppm) compared to the concentration of trichloroethene (0.22 ppm)

detected in samples collected from monitoring well MW-10 suggests that trichloroethene degradation may be occurring.

No VOCs were detected in monitoring wells MW-1 and MW-6 located in the southeastern portion of the site and wells MW-16 and MW-16A located at the southeast end of the NC DOT facility. Also, VOCs were not detected in ground water samples obtained from wells MW-11 and MW-12 located at the northwestern portion of the site.

Trichloroethene, 1,2,-dichloroethene, and vinyl chloride were not detected in ground water samples obtained from wells MW-15 and MW-15A. This further defines the extent of the plume to the north. Ground water samples obtained from wells MW-15 and MW-15A did have concentrations of 1,1,1-trichloroethane, 1,1-dichloroethane, 1,1,-dichloroethene, and chloroform. These compounds were not detected in any of the remaining wells and are not attributed to the VOC plume originating from the Girmes site.

A ground water sample was also collected from an unused production well located on the northeast side of the Girmes facility near the suspected source area. This well is approximately 460 feet deep and is completed in bedrock. No VOCs were detected.

The ground water sample obtained from bedrock monitoring well MW-14 located on the southwest side of the Girmes site had a trichloroethene concentration of 0.52 ppm. No other VOCs were detected.

5.2.3 Conclusions

These results confirm the findings of the Phase 1 field screening. The extent of the plume on the east and northeast of the site has been defined. Detected concentrations of trichloroethene and 1,2-dichloroethene within the plume exceeded North Carolina Drinking Water Standards. The plume extends from the Girmes site to the northwest following the general direction of ground water flow. Trichloroethene concentrations decrease with distance from the Girmes site. The extent of affected ground water on the southwest side was not determined during Phase 1.

5.3 Phase 3 Ground Water Investigation - Southwest Side Girmes Facility

Based on the analytical results obtained from well MW-14 during the Phase 2 investigation, additional areas located on Girmes property along Gashes Creek were identified for further evaluation. During March 1994, a ground water screening investigation similar to Phase 1 was initiated. However, due to shallow bedrock conditions at the desired sample locations, no *in-situ* ground water samples could be obtained. For this reason, five monitoring wells (MW-18, MW-19, MW-20, MW-21, and MW-22) were installed. Monitoring wells MW-18, MW-19, MW-21, and MW-22 were installed to determine the extent of the plume along Gashes Creek. MW-20 was installed to determine the downgradient extent of the plume identified on NC DOT property. Well locations are shown on Plate 1.

5.3.1 Ground Water Sampling

On April 20, 1994, ground water samples were collected from the five new wells. Samples were analyzed for trichloroethene, 1,2-dichloroethene, and vinyl chloride using Method 8010/8020. In addition, samples of surface water from Gashes Creek (SW-1 to SW-4), an unnamed intermittent tributary (SW-5), and a ground water seep (SW-6) on Girmes property were also collected and analyzed for VOCs. Table 5-4 summarizes the results. Table 5-5 presents a summary of the field indicator parameters: pH, temperature, and specific conductance.

5.3.2 Analytical Results

The ground water samples obtained from MW-18, MW-19, and MW-21 contained levels of trichloroethene above the NC standard of 0.0028 ppm. MW-21 had the highest concentration of trichloroethene at 0.49 ppm. MW-18 had a concentration of 0.0033 ppm, while MW-19 showed a concentration of 0.0037 ppm. Trichloroethene was detected at a concentration of 0.072 ppm in surface water collected from an intermittent tributary (SW-5). At a seep (SW-6) adjacent to MW-18, trichloroethene was detected at a concentration of 0.0003 ppm. Trichloroethene was also detected at a concentration of 0.0009 ppm in a sample (SW-4) obtained in Gashes Creek downstream from MW-19. 1,2-Dichloroethene was detected in wells MW-18 (0.0086 ppm) and MW-21 (0.13 ppm). The concentration in MW-21 exceeds the NC standard of 0.07 ppm. 1,2-Dichloroethene was also detected in surface water sample SW-5, collected at an intermittent tributary, at a concentration of 0.004 ppm.

TABLE 5-4

PHASE 3 SURFACE WATER/GROUND WATER ANALYTICAL RESULTS[a]

SAMPLE NO.	TRICHLOROETHENE	1,2-DICHLOROETHENE (TOTAL)	VINYL CHLORIDE	DATE COLLECTED
SW-1	<0.002	<0.002	<0.001	3/23/94
SW-2	<0.002	<0.002	<0.001	3/23/94
SW-3	<0.002	<0.002	<0.001	3/23/94
SW-4	0.0009	<0.010	<0.010	4/14/94
SW-5	0.072	0.004	<0.010	4/14/94
SW-6	0.0003	<0.010	<0.010	4/14/94
MW-18	0.0033	0.0086	<0.002	4/20/94
MW-19	0.0037	<0.002	<0.001	4/20/94
MW-20	<0.001	<0.002	<0.001	4/20/94
MW-21	0.49	0.13	<0.020	4/20/94
MW-22	<0.001	<0.002	<0.001	4/20/94

[a] Analytical results are reported in parts per million (ppm).
< - Concentration less than the Contract Required Quantitation Limit.

TABLE 5-5

SUMMARY OF FIELD INDICATOR PARAMETERS
April 20, 1994

LOCATION	TEMP °C	pH s.u.[a]	SPECIFIC [b] CONDUCTANCE
MW-18	15.7	6.4	42
MW-19	12.8	5.6	68
MW-20	15.1	6.1	200
MW-21	16.4	5.9	180
MW-22	13.8	6.2	37

[a] Standard units
[b] Units are µmhos/cm, adjusted to 25°C

5.3.3 Conclusion

VOCs were not detected in MW-20, so the extent of the plume on the DOT property has been defined. VOCs were also not detected in well MW-22 located on the northwest end of the Girmes facility. VOCs were detected in MW-18, MW-19, MW-21, and at SW-4. These analytical results indicate that ground water is affected by VOCs on the southwest side of the Girmes facility and extends to Gashes Creek.

5.4 Phase 4 Ground Water Investigation - Dotson Property

During July 1994, *in-situ* ground water samples were collected on Dotson property to assess the lateral extent, if any, of VOCs in ground water on the southwest side of Gashes Creek. Samples were collected using the methods described in Section 5.1. The *in-situ* ground water samples were collected at the point of tool refusal at eight locations (HC-10, HC-12, HC-13, HC-14, HC-15, HC-16, HC-17, and HC-18). Sample locations are shown on Plate 1.

5.4.1 Field Screening Results

Table 5-6 summarizes the screening results. Trichloroethene was detected at seven sample locations. The sample collected at HC-10-15 contained 1.08 ppm trichloroethene as measured in the field and 1.3 ppm as measured in the lab. HC-11-16 contained 0.82 ppm of trichloroethene as measured in the field. HC-12-12.5 contained 0.23 ppm of trichloroethene as measured in the field. HC-13-12.5 did not show any detection of trichloroethene, 1,2-dichloroethene, or vinyl chloride, as measured in the field. HC-14-12.5 also did not show any field results, but lab analysis showed a trichloroethene concentration of 0.0032 ppm. HC-15-13 showed a trichloroethene concentration of 0.026 ppm and HC-16-13 showed a trichloroethene concentration of 0.048 ppm. HC-17-13 showed a concentration of trichloroethene (as measured in the field) of 0.0063 ppm compared to a lab result of 0.013 ppm. HC-18-13 did not show a field response, but yielded a lab result of 0.0021 ppm of trichloroethene. HC-15-13 and HC-18-13 were collected at locations on property owned by Garland Brothers Construction.

Based on field screening results, three monitoring wells were installed to confirm the extent of affected ground water on the Dotson property. MW-23 was located to evaluate the vertical

TABLE 5-6

PHASE 5 - SUMMARY OF GROUND WATER SCREENING RESULTS[a]

SAMPLE NO.	SAMPLE DEPTH (ft)	TRICHLOROETHENE		1,2-DICHLOROETHENE		VINYL CHLORIDE		DATE COLLECTED
		FIELD	LAB	FIELD	LAB	FIELD	LAB	
HC-10	15	1.08	1.3	NR	<0.10	NR	<0.10	7/19/94
HC-11	16	0.82	NA	NR	NA	NR	NA	7/19/94
HC-12	12.5	0.023	NA	NR	NA	NR	NA	7/19/94
HC-13	12.5	NR	NA	NR	NA	NR	NA	7/20/94
HC-14	12.5	NR	0.0032	NR	<0.001	NR	<0.001	7/20/94
HC-15	13	0.026	NA	NR	NA	NR	NA	7/20/94
HC-16	13	0.048	NA	NR	NA	NR	NA	7/21/94
HC-17	13	0.0063	0.013	NR	<0.001	NR	<0.001	7/21/94
HC-18	13	NR	0.0021	NR	<0.001	NR	<0.001	7/21/94

[a] Analytical results are reported as parts per million (ppm).
NR No response noted on field gas chromatograph.
NA Not analyzed.
< Concentration less than the Contract Required Quantitation Limit.

extent of affected ground water observed at HC-10. MW-25 and MW-26 were located to document the lateral extent of affected ground water on Dotson property. MW-24 and MW-27 were installed on the Girmes side of Gashes Creek to assess the southeast extent of affected ground water on the Girmes site.

5.4.2 Ground Water Sampling

Ground water samples were collected from the five newly installed wells (MW-23 to MW-27), and the Dotson unused production well #1 on August 18, 1994. Wells MW-18, MW-19, and MW-21, and surface water sampling stations SW-1 through 4 were also sampled at this time to confirm previous results. Samples were analyzed for trichloroethene, 1,2-dichloroethene, and vinyl chloride using Method 8021/8020. Table 5-7 summarizes the analytical results, and Table 5-8 summarizes the field indicator parameters. Appendix J contains the laboratory analytical reports.

5.4.3 Analytical Results

Ground water samples obtained from MW-23, MW-24, MW-26, and the Dotson unused production well #1 contained trichloroethene in excess of the NC limit of 0.0028 ppm. The ground water sample from the Dotson unused production well #1 showed concentrations of 1,2-dichloroethene and vinyl chloride in excess of the NC limit of 0.07 and 0.000015 ppm, respectively. Ground water samples obtained from MW-25 and MW-27 did not show any concentration of VOCs, while the ground water samples obtained from MW-19 and MW-21 showed concentrations of trichloroethene above the NC limit. The ground water sample obtained from MW-18 showed a concentration of trichloroethene of 0.0017 ppm, which is below the NC limit. The surface water samples from stations SW-2, SW-3, and SW-4 also contained low concentrations of trichloroethene below the NC limit of 0.0924 ppm. SW-1 did not show any concentrations of VOCs.

On the basis of these results, a second round of ground water samples was collected from selected monitoring wells (MW-19, MW-23, and MW-24) and Dotson's unused production well #1 to verify the earlier results. Analytical results are also summarized in Table 5-7.

TABLE 5-7

PHASE 4 - SURFACE AND GROUND WATER ANALYTICAL RESULTS SOUTHWEST SIDE OF THE GIRMES FACILITY

PARAMETER	TRICHLOROETHENE		1,2-DICHLOROETHENE		VINYL CHLORIDE	
DATE COLLECTED	AUGUST 1994	SEPT 1994	AUGUST 1994	SEPT 1994	AUGUST 1994	SEPT 1994
SW-1	<0.001	NA	<0.002	NA	0.001	NA
SW-2	0.0015	NA	<0.002	NA	<0.001	NA
SW-3	0.0025	NA	<0.002	NA	<0.001	NA
SW-4	0.0026	NA	<0.002	NA	<0.001	NA
DOTSON UNUSED PRODUCTION WELL #1	0.130	2.1	0.280	0.720	0.045	0.083
MW-18	0.0017	NA	0.0036	NA	<0.001	NA
MW-19	0.18	0.40	<0.020	0.019	<0.010	<0.010
MW-21	0.49	NA	0.14	NA	<0.020	NA
MW-22	NA	NA	NA	NA	NA	NA
MW-23	3.5	5.7	<0.20	<0.20	<0.10	<0.10
MW-24	2.2	0.20	<0.20	<0.010	<0.10	<0.005
MW-25	<0.001	NA	<0.002	NA	<0.001	NA
MW-26	0.017	NA	0.0085	NA	<0.001	NA
MW-27	<0.001	NA	<0.002	NA	<0.001	NA

Results are reported as parts per million (ppm).
NA - Not analyzed.
< - Concentration less than the Contract Required Quantitation Limit.

TABLE 5-8

SUMMARY OF FIELD INDICATOR PARAMETERS
August 18 - 19, 1994

LOCATION	TEMP °C	pH s.u.[a]	SPECIFIC [b] CONDUCTANCE
MW-18	16.5	6.7	1100
MW-19	13.9	6.8	260
MW-21	15.5	6.7	360
MW-23	16.6	7.1	380
MW-24	17.2	6.6	230
MW-25	17.9	6.9	230
MW-26	19.5	6.4	270
MW-27	16.1	7.2	190
DOTSON UNUSED PRODUCTION WELL #1	17.4	6.6	920

[a] Standard units
[b] Units are µmhos/cm, adjusted to 25°C

The concentration of trichloroethene in MW-19 increased from 0.180 to 0.40 ppm, and the concentration of 1,2-dichloroethene increased from below detection limits to 0.019 ppm. The concentration of trichloroethene in MW-23 increased from 3.5 ppm to 5.7 ppm. No other VOC was detected in MW-23. The concentration of trichloroethene in MW-24 decreased from 2.2 ppm to 0.20 ppm. The concentrations of trichloroethene, 1,2-dichloroethene, and vinyl chloride in the Dotson unused production well #1 were higher than the concentrations observed during the first round of sampling. Trichloroethene increased from 0.13 ppm to 2.1 ppm. 1,2-Dichloroethene increased from 0.28 ppm to 0.72 ppm, which is above the NC limit of 0.07 ppm. The concentration of vinyl chloride increased from 0.045 ppm to 0.083 ppm.

Trichloroethene and 1,2-dichloroethene concentrations are shown on maps and cross sections on Plates 6, 7, 8, 9, 10, 11, 12, and 13. The maps show the approximate limits of affected ground water. Trichloroethene and 1,2-dichloroethene are the primary VOCs detected in ground water. Vinyl chloride has been observed only in the Dotson unused production well #1 and MW-13.

5.4.4 Conclusions

The lateral extent of affected ground water on the southwest side of the Girmes site has been defined. Gashes Creek serves as the discharge point for affected ground water flowing downhill from the ridge above. Affected ground water has also been found on Dotson property across Gashes Creek from the Girmes site. The highest concentrations of trichloroethene yet observed on the southwest side of the Site are found in this area and may be the result of operations at Dotson's facility.

Section 6
MIGRATION PATHWAYS AND POTENTIAL RECEPTORS

6.1 Migration Pathways

Results of this site assessment have demonstrated that ground water both north and southwest of the Girmes facility has been affected. The primary constituent is trichloroethene. 1,2-Dichloroethene and vinyl chloride were detected in three of 28 monitoring wells. The presence of 1,2-dichloroethene and vinyl chloride indicate that natural degradation is occurring. These constituents are created by the biotransformation of trichloroethene with an end product of carbon dioxide and water. Ground water transport is the primary pathway for any constituent from the site. Air transport and direct contact are not indicated as pathways because the constituents exist at depth. There is evidence of some ground water discharge to surface waters, as discussed below.

As indicated by the water table map on Plate 5 and the configuration of the trichloroethene and 1,2-dichloroethene plumes on Plates 6 and 7, ground water on the northeast side of the Girmes site flows north towards the NC DOT facility and then flows northwest towards the Swannanoa River where it is expected to discharge. Ground water quality data collected to date shows that constituent concentrations on the northeast side are decreasing downgradient of the site. Natural degradation in combination with dispersion as the plume migrates northwest is expected to result in the complete dissipation of the plume before it reaches the Swannanoa River.

Plates 5, 6, and 7 also show that ground water on the southwest side of the Girmes site flows southwest and west towards Gashes Creek where at least some portion of flow is expected to discharge. Trichloroethene has been detected from a seep (SW-6) and intermittent stream (SW-5) adjacent to Gashes Creek and in the creek at Station SW-4. This indicates that the plume extends to Gashes Creek. Affected ground water present on the Dotson property is expected to flow northeastward, also towards Gashes Creek.

Migration of trichloroethene in the surface waters of Gashes Creek is a secondary migration pathway. Gashes Creek flows northward along the edge of the site and then continues another 700 feet to the Swannanoa River where it discharges. It is expected that the low concentrations of trichloroethene detected in Gashes Creek will dissipate to a point of non detection before reaching the Swannanoa

River. As shown on Plate 1, Gashes Creek and Swannanoa River are the only surface water bodies in the area.

Underground utilities such as sewer lines and storm sewer lines located in the vicinity of the site are shown on Plate 1. One sewer line is located on the southwest side of the Girmes facility and extends across Gashes Creek. The sewer line is located near the water table in the vicinity of Gashes creek and is exposed where it crosses the creek. The sewer line is connected to a main north-south trunk line on Dotson's Property. This sewer line is in the area of affected ground water both on the Girmes site and on Dotson's property. It is not known if the sewer line acts as a migration pathway.

A storm sewer is located along the edge of the parking area at the Girmes facility and extends northwest and away from the site. This storm sewer is relatively shallow below the land surface. The depth to the water table in this area is over 40 feet. It is unlikely that this storm sewer enhances constituent migration in ground water.

A second storm sewer is located on DOT property. This line was placed in the original drainage swale prior to placing fill at the site. The sewer collects some ground water seeps as well as surface water runoff and drains northwestward to Gashes Creek where it discharges.

6.2 Potential Receptors

Free phase volatile organic compounds have not been found on site. Volatile concentrations in ground water are relatively low. The potential for accumulation free product or vapors is minimal. Therefore, there are no known structures at the site that are potentially at risk of being receptors of free product or vapors.

Potential receptors are limited to exposure through ground and surface water pathways. RMT completed a search for potential human receptors affected by ground water. Records maintained by the Asheville-Buncombe Water Authority were evaluated and a visual survey of the vicinity was conducted to identify ground water users within a 1,500-foot radius of the site boundary, as specified in the CSA guidance for determination of potential receptors. No probable users of ground water were identified within the 1,500-foot radius of the site. Three production wells have been identified: one on Girmes Property and two on Dotson Property. These are industrial wells and none of these wells are in

use. The Asheville-Buncombe Water Authority services the entire area and provides service to residences within 1,500 feet of the Girmes site.

There are no surface water intakes for public water supply within the 1,500-foot boundary. A memorandum documenting the information provided by the Asheville-Buncombe Water Authority is included as Appendix K.

The only residential area within the 1,500-foot radius of the site is located along Gashes Creek Road, east of the site (See Plate 1). This area is located on a ridge which acts as a ground and surface water divide. These homes are located upgradient of the site. Surface and ground water migration at the site is to the northwest, away from the residential area.

As required by the CSA, a compilation of owners of property located adjacent to the site has been gathered. Adjacent property owners are tabulated in Table 6-1 and their property locations are shown on Figure 6-1.

TABLE 6-1

SUMMARY OF ADJACENT PROPERTY OWNERS

MAP NUMBER	PIN NUMBER	OWNER NAME
1	9658-20-8152	State of North Carolina
2	9658-13-03-5331	Buncombe County
3	9658-17-00-8761	Ruby M. Pake
4	9658-17-00-9556	Brenda Ann Stinson
5	9668-17-00-6458	Ruth Teague
6	9658-17-00-7377	Georgia Miller
7	9657-08-99-3907	William H. Reed, Jr.
8	9658-20-90-2265	Grace Gordon Pless, *et al.*
9	9658-20-90-3532	Sweeten Creek Investments, Inc., *et al.*
10	9658-20-90-1866, 1790	Dotson Metal Finishing, Inc.
11	9658-20-91-1029	Gail C. Ballard, *et al.*

/usr3/hydro/7014401h/701446-1.fig
cgh 11-16-94

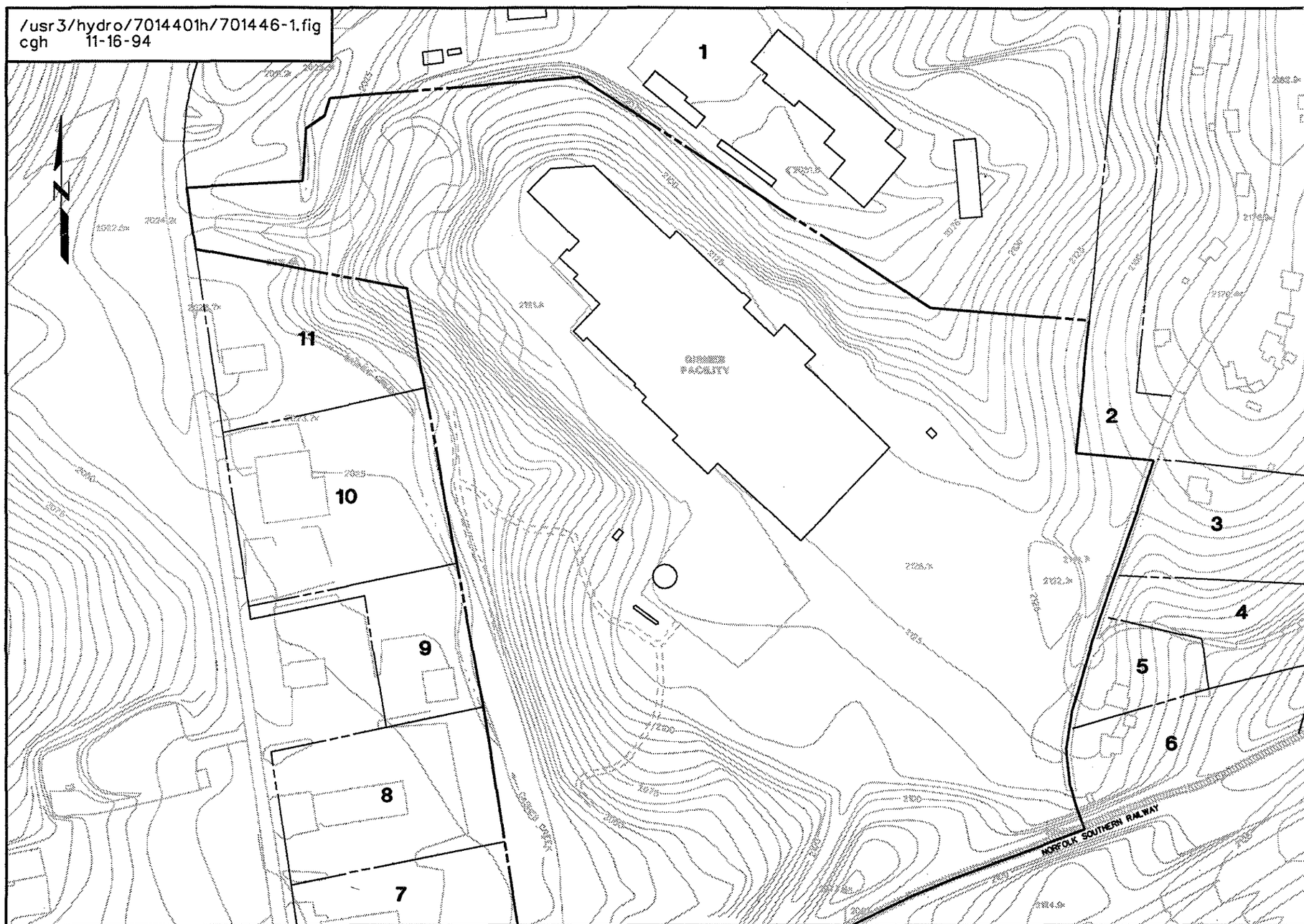

LEGEND

1 ADJACENT PROPERTY - SEE TABLE 6-1 FOR OWNER NAME AND PARCEL IDENTIFICATION NUMBER. PROPERTY BOUNDARIES ARE COPIED FROM BUNCOMBE COUNTY TAX MAPS.

0 200 400
SCALE IN FEET

RMT 70144.02
1194

FIGURE 6-1

ADJACENT PROPERTY

GIRMES SITE, formerly SKF USA
ASHEVILLE, NORTH CAROLINA

Section 7
CONCLUSIONS

The conclusions presented in this section are based on the previous investigations at the Girmes site and the Phase 1 through Phase 4 ground water investigations conducted by RMT.

- Geology at the Girmes site consists of bedrock that is primarily an amphibolite with some mica schist and felsic gneiss. The bedrock is overlain with a silty sand to silt saprolite. The NC DOT facility, north and northeast of and adjacent to the Girmes property, is located in a drainage swale that has been filled with soil to allow for construction of the facility. Fill thickness ranges from 5 to 24 feet. Drainage in the swale is directed through storm culverts installed beneath the fill. The Dotson facility is located in the floodplain of Gashes Creek, and is underlain by silt, gravel, saprolite, and bedrock.

- Ground water at the Girmes site occurs under water table conditions. The water table is below the bedrock surface along the ridge underlying the Girmes site and is present within saprolite and/or flood plain deposits at the base of the ridge.

- Ground water is recharged at a topographic high located southeast of the site, and flows northwest along the ridge. The ridge appears to act as a ground water divide, such that a portion of flow is directed north and northwest towards the Swannanoa River and a portion of flow is directed to the southwest towards Gashes Creek. Seepage velocities are approximately 23 to 79 ft/yr in the bedrock, approximately 31 to 145 ft/yr in the overlying saprolite, and approximately 21 ft/yr in the floodplain deposits of Gashes Creek.

- Varsol affected soils were removed during a previous investigation. Ground water samples were analyzed for Varsol-related constituents. No Varsol-related constituents were observed.

- Three soil borings were drilled in an area where waste debris was believed to have been disposed of on the northeast side of the Girmes site. This area is believed to be the source of VOCs detected in ground water. Of the three borings, only SB-1 encountered waste debris. Soil samples collected from the bottom of each boring were analyzed for VOCs. Trichloroethene was detected in SB-1 at a concentration of 0.002 ppm. This was the only volatile compound detected in SB-1. The low concentration suggests that the source of trichloroethene is no longer present in the waste. Toluene was detected in SB-3 at a concentration of 0.0003 ppm. No other VOCs were detected in SB-3. No VOCs were detected in SB-2. Soil sample SB-1 was also analyzed for semivolatile organic compounds. None were detected.

- The PCB Aroclor 1254 was detected at a concentration of 500 ppm in the soil sample collected from boring SB-1. PCBs were not detected in the soil sample collected from SB-2. There was insufficient sample to analyze SB-3 for PCBs. PCBs were not detected in ground water at the site.

- Ground water northeast of the Girmes site has concentrations of trichloroethene and 1,2-dichloroethene. The highest trichloroethene concentrations are found in well MW-5, located in the vicinity of the waste debris. A plume of trichloroethene and 1,2-dichloroethene has been defined and extends from the northeast side of the Girmes site, north onto NC DOT property, and turns northwest towards the Swannanoa River. This plume configuration is consistent with ground water flow direction. The plume extends approximately 500 feet north of the area of waste disposition. Trichloroethene concentrations decrease with distance downgradient.

- Analytical results indicate that the trichloroethene found in ground water on the northeast side of the Girmes site is degrading to the daughter products 1,2-dichloroethene and vinyl chloride. Vinyl chloride has only been observed in MW-13.

- The VOC plume on the northeast side of the Girmes site is migrating to the northwest towards the Swannanoa River.

- Ground water southwest of the Girmes site has concentrations of trichloroethene and 1,2-dichloroethene. The highest concentrations of trichloroethene have been observed in monitoring wells MW-19 and MW-24. A plume of affected ground water has been identified, and the configuration is consistent with ground water flow direction. Affected ground water discharges into Gashes Creek.

- Ground water on the Dotson property has concentrations of trichloroethene, 1,2-dichloroethene, and vinyl chloride. The highest concentrations of trichloroethene have been observed in MW-23 and the unused production well #1. Vinyl chloride has been observed only in the unused production well #1. A plume of affected ground water has been defined; the configuration is consistent with ground water flow direction. Gashes Creek serves as the discharge point for ground water in the alluvium aquifer. Affected ground water has also been identified in fractured bedrock. The source(s) of trichloroethene on the Dotson Property has not been identified.

Section 8
RECOMMENDATIONS

The recommendations presented in this section are based on the conclusions reached as a result of the CSA. These recommendations are proposed to satisfy NC DEM's desire for an interim remedial action prior to completion of a Corrective Action Plan (CAP).

- Conduct a soil vapor extraction (SVE) trial evaluation at the areas adjacent to MW-4 and MW-5. The trial would determine if VOCs are present in unsaturated fractured bedrock at significant levels and if they are removable.

- Collect quarterly ground water quality data from the 28 monitoring wells at the site for one year to assess long-term trends in water quality. This information will be necessary for developing a CAP for the Site.

Section 9

REFERENCES

Bain, Palmer & Associates, Inc. 1992. *Environmental Assessment, J.L. deBall - Girmes of America, Inc., Asheville, N.C. Plant.*

Bain, Palmer & Associates, Inc. 1993. *Supplemental Environmental Investigation, J.L. deBall - Girmes of America, Inc., Asheville, N.C. Plant.*

Bouwer, H. and R.C. Rice. 1976. *A Slug Test for Determining Hydraulic Conductivity of Unconfined Aquifers With Completely or Partially Penetrating Wells.* Water Resources Research. Volume 12, pp 423–428.

Bouwer, H. 1989. *The Bouwer and Rice Slug Test - An Update.* Ground Water. Volume 27, No. 3, pp 304–309.

Freeze, R.A., and J.A. Cherry. 1979. *Ground Water.* Prentice Hall, Inc.

Miller, Jr., J. William. 1990. *The Geology of the Asheville 7-1/2 Minute Quadrangle: A Preliminary Study of the Beaucatcher Roadcut and the Reed Creek Stream Cut.* North Carolina Geological Survey, Division of Land Resources, Department of Environment, Health and Natural Resources.

RMT, Inc., 1993. *Addendum 1 to Workplan for Field Activities, Girmes Site, Formerly SKF, Ground Water Incident No. 10032, Buncombe County, North Carolina.*

S&ME, Inc. 1993. *Phase II Environmental Site Assessment, J.L. deBall - Girmes Facility, Asheville, North Carolina.*

Soller, D.R., and H.H. Mills. 1991. *Surficial Geology and Geomorphology*, in Horton, J.W., Jr., and Zullo, V.A., editors, The Geology of the Carolinas. The University of Tennessee Press, pp 203-208.

APPENDIX A

NOTICE OF VIOLATION

State of North Carolina
Department of Environment, Health, and Natural Resources

Asheville Regional Office

James B. Hunt, Jr., Governor
Jonathan B. Howes, Secretary

DIVISION OF ENVIRONMENTAL MANAGEMENT

Ann B. Orr
Regional Manager

April 21, 1993

CERTIFIED MAIL
RETURN RECEIPT REQUESTED

P 411 632 934

Mr. Allen G. Belenson
SKF USA, Incorporated
1100 First Avenue
King of Prussia, Pennsylvania 19406

Dear Mr. Belenson:

Subject: Notice of Violation for:
1. Oil Pollution and Hazardous Substances Control Act, N.C. General Statutes 143-215.75 et seq. and;
2. Groundwater Classifications and Standards, Title 15A, N.C. Administrative Code, Subchapter 2L.

The Former SKF, Incorporated Plant
Old Highway 74 East, Asheville
Buncombe County, North Carolina

Based upon analytical data from groundwater monitoring at the subject site and sworn statements from former SKF, Incorporated employees, the Division of Environmental Management (the Division) has reason to believe that you are responsible for activities resulting in violations of North Carolina law. This letter is a standard notification to such a violation under North Carolina law.

Chapter 143, North Carolina General Statutes, authorize and directs the Environmental Management Commission and the North Carolina Department of Environment, Health, and Natural Resources (DEHNR) to protect and preserve the water and air resources of the State. The Division has the delegated authority to enforce adopted pollution control rules and regulations.

Under G.S. 143-215.83(a), the unlawful discharge of oil or other hazardous substances into or upon any water or lands within this State is prohibited. The release of varsol and trichloroethylene at the subject site establishes a violation of G.S. 143-215.83(a) of the Oil Pollution and Hazardous Substances Control Act.

The presence of trichloroethylene; 1,2 dichloroethylene; and vinyl chloride in the groundwater establishes a violation of NCAC Title 15A, Subchapter 2L, Classifications and Water Quality Standards Applicable to the Groundwaters of North Carolina.

As described in G.S. 143-215.84(a), any person having control over oil or other hazardous substances unlawfully discharged into or upon any water or lands within this State shall immediately undertake to collect and remove the discharge and to restore the area affected by the discharge as nearly as may be to the condition existing prior to the discharge. If it is not feasible to collect and remove the discharge, the person responsible shall take all practicable actions to contain, treat, and disperse the discharge; but no chemicals or other dispersants or treatment material which will be detrimental to the environment or natural resources shall be used for such purposes unless they shall have been previously approved by the Environmental Management Commission.

Upon any violations of established deadlines, no further notice may be sent and this office may immediately request that enforcement measures be commenced. Therefore, it is important that all deadlines be met, or an extension of time be requested for good cause. Failure to respond within the times specified may result in the recommendation for one or more of the following enforcement actions:

1. Assessment of a civil penalty assessment under authority of G.S. 143-215.88A of not more than $5,000 for each violation of the Oil Pollution and Hazardous Substances Control Act;

2. Assessment of a civil penalty assessment under authority of G.S. 143-215.6A of not more than $10,000 per day if any action or failure to act is continuous; issuance of a special order against you under the authority of G.S. 143-215.2; or a request to the Attorney General to institute an action for injunctive relief for violations of the North Carolina Groundwater Standards;

3. Criminal action, including penalty assessments may be commenced against any person who knowingly and willfully violates any groundwater standard, cleanup requirement or UST technical requirement.

Within two weeks of the receipt of this notice, you are to submit to this office a written response as to your intentions for conducting a comprehensive site assessment (CSA Guidelines enclosed). The CSA shall be completed, and a report provided to the office by December 31, 1993.

Your response should be directed to Kay Dechant at the following address: NC DEHNR, DEM, Groundwater Section, 59 Woodfin Place, Asheville, North Carolina 28801. If you have any questions, please feel free to call Kay Dechant at (704) 251-6208.

Sincerely,

Roy M. Davis
Regional Supervisor

RMD/LKD/gc

Enclosure

cc: Paul R. Flay
Robert Alan Cohen
Arthur Mouberry
Burrie Boshoff
Buncombe County Health Department

6/11/92

Comprehensive Site Assessment (CSA) Report Guidelines

CSA Goal:

To sufficiently characterize the extent of soil and groundwater contamination such that a corrective action plan can be developed

Trigger mechanisms for CSA requirement:

- substances exceeding the 15A NCAC 2L groundwater standards
- free product on the water table
- contaminated soil in contact with groundwater
- requested by Division of Environmental Management

Minimum elements of CSA report:

1. Table of Contents (please number all pages of text)
2. Site History and Source Characterization
   - history of property ownership and usage (e.g. UST owners and operators, operating practices at site, list of chemicals used at the facility, etc.)
   - summary of previous release information or known contamination including dates, sources, contaminants and quantities
   - summary of previous environmental investigations
   - release scenario and/or means of contaminant discovery
   - summary of initial assessments
   - summary of corrective actions to date
   - site map shown on segment of 7 1/2-minute topographic map or county highway map
   - base map showing location of all known and potential contaminant sources, property lines, relevant physical features (e.g. buildings, roads, structures, on-site wastewater treatment plants, etc.), scale, north arrow
   - base or site map showing potential off-site contaminant sources

3. Potential Receptors and Migration Pathways

   - map showing location of all water supply wells, surface water intakes for public water supply and property owners within 1500 feet of the contamination

   - table showing name and address from tax records of property owners adjacent to contamination site

   - subsurface utilities, structures and underground lines superimposed on base map

   - discussion of proximity and availability of municipal water lines

   - designation on base map of structures potentially at risk from free product and/or vapors

   - direction of surface drainage superimposed on base map

4. Soils Investigation

   - soil boring locations superimposed on base map

   - delineation on base map showing approximate horizontal extent of areas containing contaminants in the unsaturated zone at concentrations above the action level established for soil remediation

   - minimum of two cross sections through the unsaturated zone preferably intersecting at right angles and extending across the site exhibiting the subsurface profile and the approximate vertical extent of the contamination as determined by the soil borings

   - table listing field screening and laboratory results (Note: No composite samples), units of measure, date of sample collection, sample depth and sample identification referencing sample points shown on base map

5. Groundwater Investigation

   - location of monitor and recovery wells superimposed on base map

- discussion of monitor well locations which includes pre-installation screening methods used, number of wells, and construction of wells in terms of the nature of the contaminants and the aquifer contaminated (i.e. floaters vs. sinkers, placement of the screened interval, contaminated groundwater in saprolite vs. bedrock, upgradient vs. downgradient wells, etc.)

- table showing static water level measurements referenced to a common datum for all monitor wells to include depth to static water level, relative elevations of points from which depth is measured, relative static water level, date of measurement, and reference to wells shown on base map

- water table contour map and flow lines superimposed on the base map which exhibit direction(s) of groundwater flow with static water level measurements used in the flow net construction printed next to the well locations

- table of analytical results of samples collected from water supply wells at risk of becoming contaminated or from the influent and effluent from point-of-entry filter systems including date(s) of sample collection, units of measure, and reference to supply well(s) shown on site or base map

- table of analytical results for all monitor wells including comparison to 15A NCAC 2L standards, date(s) collected, units of measure, and reference to monitor well shown on base map

- free product map superimposed on the base map showing the extent of free product, the thickness, and date measured

- isoconcentration map superimposed on the base map showing at a minimum the complete horizontal extent of the most widespread contaminant and the contaminant present at the most highly elevated levels (Note: Ring of wells with contaminant levels near or below the 2L groundwater standards must be installed and sampled to complete this map.)

- minimum of two aquifer cross sections intersecting at approximate right angles and extending across the contamination site exhibiting major hydrogeologic units (e.g. gravel, sand, fill, bedrock, etc.) as determined by the boring logs, a vertical and horizontal scale, static water level measurements, date measured, screened interval in monitor wells, and contaminant level at sampling points (Note: A minimum of one deeper well with contaminant levels near or below 2L groundwater standards must be installed and sampled to complete the cross sections.)

- discussion of plume characteristics and significant features or mechanisms which could affect local groundwater flow patterns and plume migration

6. Recommendations

   - discussion of preliminary corrective action to be evaluated for the development of the corrective action plan

7. References

   - interviews

   - file reviews

   - resource material cited

8. Appendices

   - standard operating procedures used at site for sampling, equipment decontamination, well construction, etc.

   - boring logs and soil descriptions

   - well construction records

   - chain-of-custody forms

   - laboratory reports for all samples

   - list of permits received, permitting agency, permit number and date issued

   - other documentation (e.g. tank tightness results)

APPENDIX B

LABORATORY ANALYTICAL REPORTS FOR SUBSURFACE SOILS

RMT LABORATORIES · 744 HEARTLAND TRAIL · MADISON, WI · 53717-1934 · P.O. BOX 8923 · MADISON, WI · 53708-8923 · 608/831-4444 · 608/831-7530 FAX

VOLATILE ORGANICS ANALYSIS DATA SHEET

Report Date: 10/27/93

RMT SAMPLE NO.
3411-001

Client Name: SKF - ASHEVILLE
Matrix:(soil/water) SOIL
Sample wt/vol: 2.0 g (g/mL)
Level: (low/med) LOW
Moisture: 30 %
Column: (pack/cap) CAP

Project #:70144.01
Field Sample ID: SB-1 23-25'
Lab File ID: >FT002
Sampling Date: 10/13/93
Analysis Date: 10/21/93
Dilution Factor: 2.5

CONCENTRATION UNITS:UG/KG

CAS NO.	COMPOUND	Conc.	EQL	Code
74-87-3	Chloromethane		36	U
74-83-9	Bromomethane		36	U
75-01-4	Vinyl Chloride		36	U
75-00-3	Chloroethane		36	U
75-09-2	Methylene Chloride		36	U
107-02-8	Acrolein		71	U
107-13-1	Acrylonitrile		71	U
75-69-4	Fluorotrichloromethane		36	U
75-35-4	1,1-Dichloroethene		36	U
75-34-3	1,1-Dichloroethane		36	U
540-59-0	1,2-Dichloroethene(total)		36	U
67-66-3	Chloroform		36	U
107-06-2	1,2-Dichloroethane		36	U
71-55-6	1,1,1-Trichloroethane		36	U
56-23-5	Carbon Tetrachloride		36	U
75-27-4	Bromodichloromethane		36	U
78-87-5	1,2-Dichloropropane		36	U
10061-01-5	cis-1,3-Dichloropropene		36	U
79-01-6	Trichloroethene	2	36	Q
71-43-2	Benzene		36	U
79-00-5	1,1,2-Trichloroethane		36	U
10061-02-6	trans-1,3-Dichloropropene		36	U
124-48-1	Chlorodibromomethane		36	U
110-75-8	2-Chloroethylvinyl ether		36	U
75-25-2	Bromoform		36	U
127-18-4	Tetrachloroethene		36	U
79-34-5	1,1,2,2-Tetrachloroethane		36	U
108-88-3	Toluene		36	U
108-90-7	Chlorobenzene		36	U
100-41-4	Ethylbenzene		36	U

Mark A. Mieritz 10/27/93
Approval Signature

RMT LABORATORIES · 744 HEARTLAND TRAIL · MADISON, WI · 53717-1934 · P.O. BOX 8923 · MADISON, WI · 53708-8923 · 608/831-4444 · 608/831-7530 FAX

VOLATILE ORGANICS ANALYSIS DATA SHEET

Report Date: 10/27/93

RMT SAMPLE NO.: 3411-002

Client Name: SKF - ASHEVILLE
Matrix:(soil/water) SOIL
Sample wt/vol: 5.0 g (g/mL)
Level: (low/med) LOW
Moisture: 8 %
Column: (pack/cap) CAP

Project #:70144.01
Field Sample ID: SB-2 28-30'
Lab File ID: >FT006
Sampling Date: 10/14/93
Analysis Date: 10/22/93
Dilution Factor: 1.0

CONCENTRATION UNITS:UG/KG

CAS NO.	COMPOUND	Conc.	EQL	Code
74-87-3	Chloromethane		11	U
74-83-9	Bromomethane		11	U
75-01-4	Vinyl Chloride		11	U
75-00-3	Chloroethane		11	U
75-09-2	Methylene Chloride		11	U
107-02-8	Acrolein		22	U
107-13-1	Acrylonitrile		22	U
75-69-4	Fluorotrichloromethane		11	U
75-35-4	1,1-Dichloroethene		11	U
75-34-3	1,1-Dichloroethane		11	U
540-59-0	1,2-Dichloroethene(total)		11	U
67-66-3	Chloroform		11	U
107-06-2	1,2-Dichloroethane		11	U
71-55-6	1,1,1-Trichloroethane		11	U
56-23-5	Carbon Tetrachloride		11	U
75-27-4	Bromodichloromethane		11	U
78-87-5	1,2-Dichloropropane		11	U
10061-01-5	cis-1,3-Dichloropropene		11	U
79-01-6	Trichloroethene		11	U
71-43-2	Benzene		11	U
79-00-5	1,1,2-Trichloroethane		11	U
10061-02-6	trans-1,3-Dichloropropene		11	U
124-48-1	Chlorodibromomethane		11	U
110-75-8	2-Chloroethylvinyl ether		11	U
75-25-2	Bromoform		11	U
127-18-4	Tetrachloroethene		11	U
79-34-5	1,1,2,2-Tetrachloroethane		11	U
108-88-3	Toluene		11	U
108-90-7	Chlorobenzene		11	U
100-41-4	Ethylbenzene		11	U

Mark A. Mierts 10/27/93
Approval Signature

RMT LABORATORIES · 744 HEARTLAND TRAIL · MADISON, WI · 53717-1934 · P.O. BOX 8923 · MADISON, WI · 53708-8923 · 608/831-4444 · 608/831-7530 FAX

VOLATILE ORGANICS ANALYSIS DATA SHEET

Report Date: 10/27/93

RMT SAMPLE NO.: 3411-003

Client Name: SKF - ASHEVILLE
Matrix:(soil/water) SOIL
Sample wt/vol: 5.0 g (g/mL)
Level: (low/med) LOW
Moisture: 15 %
Column: (pack/cap) CAP

Project #:70144.01
Field Sample ID: SB-3 30-30.5'
Lab File ID: >FT004
Sampling Date: 10/14/93
Analysis Date: 10/21/93
Dilution Factor: 1.0

CONCENTRATION UNITS:UG/KG

CAS NO.	COMPOUND	Conc.	EQL	Code
74-87-3	Chloromethane		12	U
74-83-9	Bromomethane		12	U
75-01-4	Vinyl Chloride		12	U
75-00-3	Chloroethane		12	U
75-09-2	Methylene Chloride		12	U
107-02-8	Acrolein		24	U
107-13-1	Acrylonitrile		24	U
75-69-4	Fluorotrichloromethane		12	U
75-35-4	1,1-Dichloroethene		12	U
75-34-3	1,1-Dichloroethane		12	U
540-59-0	1,2-Dichloroethene(total)		12	U
67-66-3	Chloroform		12	U
107-06-2	1,2-Dichloroethane		12	U
71-55-6	1,1,1-Trichloroethane		12	U
56-23-5	Carbon Tetrachloride		12	U
75-27-4	Bromodichloromethane		12	U
78-87-5	1,2-Dichloropropane		12	U
10061-01-5	cis-1,3-Dichloropropene		12	U
79-01-6	Trichloroethene		12	U
71-43-2	Benzene		12	U
79-00-5	1,1,2-Trichloroethane		12	U
10061-02-6	trans-1,3-Dichloropropene		12	U
124-48-1	Chlorodibromomethane		12	U
110-75-8	2-Chloroethylvinyl ether		12	U
75-25-2	Bromoform		12	U
127-18-4	Tetrachloroethene		12	U
79-34-5	1,1,2,2-Tetrachloroethane		12	U
108-88-3	Toluene	0.3	12	Q
108-90-7	Chlorobenzene		12	U
100-41-4	Ethylbenzene		12	U

Mark L. Meuth 10/27/93
Approval Signature

RMT LABORATORIES · 744 HEARTLAND TRAIL · MADISON, WI · 53717-1934 · P.O. BOX 8923 · MADISON, WI · 53708-8923 · 608/831-4444 · 608/831-7530 FAX

VOLATILE ORGANICS ANALYSIS DATA SHEET

Report Date: 10/27/93

RMT SAMPLE NO.
3411-005

Client Name: SKF - ASHEVILLE
Matrix:(soil/water) WATER
Sample wt/vol: 5.0 ml (g/mL)
Level: (low/med) LOW
Moisture: %
Column: (pack/cap) CAP

Project #:70144.01
Field Sample ID: TRIP BLANK
Lab File ID: >FT001
Sampling Date: 10/08/93
Analysis Date: 10/21/93
Dilution Factor: 1.0

CONCENTRATION UNITS:UG/L

CAS NO.	COMPOUND	Conc.	EQL	Code
74-87-3	Chloromethane		10	U
74-83-9	Bromomethane		10	U
75-01-4	Vinyl Chloride		10	U
75-00-3	Chloroethane		10	U
75-09-2	Methylene Chloride		10	U
107-02-8	Acrolein		20	U
107-13-1	Acrylonitrile		20	U
75-69-4	Fluorotrichloromethane		10	U
75-35-4	1,1-Dichloroethene		10	U
75-34-3	1,1-Dichloroethane		10	U
540-59-0	1,2-Dichloroethene(total)		10	U
67-66-3	Chloroform		10	U
107-06-2	1,2-Dichloroethane		10	U
71-55-6	1,1,1-Trichloroethane		10	U
56-23-5	Carbon Tetrachloride		10	U
75-27-4	Bromodichloromethane		10	U
78-87-5	1,2-Dichloropropane		10	U
10061-01-5	cis-1,3-Dichloropropene		10	U
79-01-6	Trichloroethene		10	U
71-43-2	Benzene		10	U
79-00-5	1,1,2-Trichloroethane		10	U
10061-02-6	trans-1,3-Dichloropropene		10	U
124-48-1	Chlorodibromomethane		10	U
110-75-8	2-Chloroethylvinyl ether		10	U
75-25-2	Bromoform		10	U
127-18-4	Tetrachloroethene		10	U
79-34-5	1,1,2,2-Tetrachloroethane		10	U
108-88-3	Toluene	2	10	Q
108-90-7	Chlorobenzene		10	U
100-41-4	Ethylbenzene		10	U

Mark A. Meintz 10/27/93
Approval Signature

RMT LABORATORIES · 744 HEARTLAND TRAIL · MADISON, WI · 53717-1934 · P.O. BOX 8923 · MADISON, WI · 53708-8923 · 608/831-4444 · 608/831-7530 FAX

Organic GC/MS Data Qualifier Sheet

B(n)	Analyte is present in the method blank. If the processes that were applied to the sample were applied to the method blank, the value of the analyte in the method blank would likely be "n".
D	Analyte value from a diluted analysis.
E	Analyte concentration exceeds calibration range (see Sample Narrative).
H(n)	Analysis performed "n" days past holding time.
K	Concentration may be elevated due to the presence of an unrequested analyte (see Sample Narrative).
NR	Not required.
Q	Qualitative mass spectral evidence of analyte present; concentration is less than the reporting limit.
U	Analyte undetected.
W	Sample received with headspace.

Effective 08/20/93

RMT LABORATORIES 744 HEARTLAND TRAIL MADISON, WI 53717-1934 P.O. BOX 8923 MADISON, WI 53708-8923 608/831-4444 608/831-7530 FAX

SAMPLE NARRATIVE
SEMIVOLATILE GC/MS ANALYSIS

Project Name: SKF-Asheville
Project No.: 70144.01

Sample Desc.	Lab Sample No.
SB-1 23-25'	3411-001

Sample 3411-001 required a 1:10 dilution prior to GC/MS analysis due to the presence of high levels of PCBs.

RMT LABORATORIES 744 HEARTLAND TRAIL MADISON, WI 53717-1934 P.O. BOX 8923 MADISON, WI 53708-8923 608/831-4444 608/831-7530 FAX

SEMIVOLATILE ORGANICS ANALYSIS DATA SHEET

Report Date: 10-23-93

RMT SAMPLE NO.: 3411-001

Client Name: SKF-Asheville Project # : 70144.01

Matrix: (soil/water)	SOIL	Field Sample ID:	SB-1 23-25'
Sample wt/vol:	30.0 (g/ml) G	Lab File ID:	>PCK99
Level: (low/med)	LOW	Sampling Date:	10-13-93
GPC Cleanup: (Y/N)	N	Date Extracted:	10-19-93
Moisture:	36	Analysis Date:	10-21-93
Column: (pack/cap)	CAP	Dilution Factor:	10.0000

CONCENTRATION UNITS:UG/KG

CAS NO.	COMPOUND	Conc.	EQL	Code
62-75-9	N-Nitrosodimethylamine		5200.	U
108-95-2	Phenol		5200.	U
111-44-4	bis(2-Ch oroethyl)ether		5200.	U
95-57-8	2-Chlorophenol		5200.	U
541-73-1	1,3-Dichlorobenzene		5200.	U
106-46-7	1,4-Dichlorobenzene		5200.	U
95-50-1	1,2-Dichlorobenzene		5200.	U
108-60-1	bis(2-Chloroisopropyl)ether		5200.	U
621-64-7	N-Nitrosodi-n-propylamine		5200.	U
67-72-1	Hexachloroethane		5200.	U
98-95-3	Nitrobenzene		5200.	U
78-59-1	Isophorone		5200.	U
88-75-5	2-Nitrophenol		5200.	U
105-67-9	2,4-Dimethylphenol		5200.	U
111-91-1	bis(2-Chloroethoxy)methane		5200.	U
120-83-2	2,4-Dichlorophenol		5200.	U
120-82-1	1,2,4-Trichlorobenzene		5200.	U
91-20-3	Naphthalene		5200.	U
87-68-3	Hexachlorobutadiene		5200.	U
59-50-7	4-Chloro-3-methylphenol		5200.	U
77-47-4	Hexachlorocyclopentadiene		5200.	U
88-06-2	2,4,6-Trichlorophenol		5200.	U
91-58-7	2-Chloronaphthalene		5200.	U
131-11-3	Dimethylphthalate		5200.	U
208-96-8	Acenaphthylene		5200.	U
606-20-2	2,6-Dinitrotoluene		5200.	U

RMT LABORATORIES 744 HEARTLAND TRAIL · MADISON, WI 53717-1934 · P.O. BOX 8923 · MADISON, WI 53708-8923 608/831-4444 · 608/831-7530 FAX

SEMIVOLATILE ORGANICS ANALYSIS DATA SHEET

Report Date: 10-23-93

RMT SAMPLE NO.: 3411-001

Client Name: SKF-Asheville Project # : 70144.01

Matrix: (soil/water)	SOIL	Field Sample ID:	SB-1 23-25'
Sample wt/vol:	30.0 (g/ml) G	Lab File ID:	>PCK99
Level: (low/med)	LOW	Sampling Date:	10-13-93
GPC Cleanup: (Y/N)	N	Date Extracted:	10-19-93
Moisture:	36	Analysis Date:	10-23-93
Column: (pack/cap)	CAP	Dilution Factor:	10.0000

CONCENTRATION UNITS: UG/KG

CAS NO.	COMPOUND	Conc.	EQL	Code
83-32-9	Acenaphthene		5200.	U
51-28-5	2,4-Dinitrophenol		13000.	U
100-02-7	4-Nitrophenol		13000.	U
121-14-2	2,4-Dinitrotoluene		5200.	U
84-66-2	Diethylphthalate		5200.	U
7005-72-3	4-Chlorophenyl-phenylether		5200.	U
86-73-7	Fluorene		5200.	U
534-52-1	4,6-Dinitro-2-methylphenol		13000.	U
86-30-6	N-Nitrosodiphenylamine (1)		5200.	U
101-55-3	4-Bromophenyl-phenylether		5200.	U
118-74-1	Hexachlorobenzene		5200.	U
87-86-5	Pentachlorophenol		13000.	U
85-01-8	Phenanthrene		5200.	U
120-12-7	Anthracene		5200.	U
84-74-2	Di-n-butylphthalate		5200.	U
206-44-0	Fluoranthene		5200.	U
129-00-0	Pyrene		5200.	U
85-68-7	Butylbenzylphthalate		5200.	U
91-94-1	3,3'-Dichlorobenzidine		670.	U
56-55-3	Benzo(a)anthracene		5200.	U
218-01-9	Chrysene		5200.	U
117-81-7	bis(2-Ethylhexyl)phthalate		5200.	U
117-84-0	Di-n-octylphthalate		5200.	U
205-99-2	Benzo(b)fluoranthene		5200.	U
207-08-9	Benzo(k)fluoranthene		5200.	U
50-32-8	Benzo(a)pyrene		5200.	U
193-39-5	Indeno(1,2,3-cd)pyrene		5200.	U
53-70-3	Dibenz(a,h)anthracene		5200.	U
191-24-2	Benzo(g,h,i)perylene		5200.	U
122-66-7	1,2-Diphenylhydrazine (2)		5200.	U
92-87-5	Benzidine		1700.	U

(1) Cannot be separated from diphenylamine.
(2) Detected as Azobenzene

Jerry L. Kubal 10/25/93
APPROVAL SIGNATURE

RMT LABORATORIES · 744 HEARTLAND TRAIL · MADISON, WI · 53717-1934 · P.O. BOX 8923 · MADISON, WI · 53708-8923 · 608/831-4444 · 608/831-7530 FAX

CLIENT: SKF-ASHEVILLE
PROJECT #: 70144.01
SAMPLE #: 3411-001RP1
STATION ID: SB-1 23-25'
METHOD: 8081
WI DNR LAB ID: 113138520

REPORT DATE: 11/02/93
COLLECTION DATE: 10/13/93
EXTRACTION DATE: 10/28/93
ANALYSIS DATE: 10/28/93
DILUTION FACTOR: 50
UNITS: ug/kg dry wt.

SEMIVOLATILE ORGANICS ANALYSIS REPORT

COMPOUND	RESULT	EQL	CODE
Aroclor-1016		39000	ND
Aroclor-1221		78000	ND
Aroclor-1232		39000	ND
Aroclor-1242		39000	ND
Aroclor-1248		39000	ND
Aroclor-1254	500000	39000	
Aroclor-1260		39000	ND

ND = Not Detected
Sample extracted one day past holding time

11/2/93

Approval Signature

RMT LABORATORIES · 744 HEARTLAND TRAIL · MADISON, WI · 53717-1934 · P.O. BOX 8923 · MADISON, WI · 53708-8923 · 608/831-4444 · 608/831-7530 FAX

CLIENT: SKF-ASHEVILLE
PROJECT #: 70144.01
SAMPLE #: 3411-002RP1
STATION ID: SB-2 28-30'
METHOD: 8081
WI DNR LAB ID: 113138520

REPORT DATE: 11/02/93
COLLECTION DATE: 10/14/93
EXTRACTION DATE: 10/27/93
ANALYSIS DATE: 10/28/93
DILUTION FACTOR: 1
UNITS: ug/kg dry wt.

SEMIVOLATILE ORGANICS ANALYSIS REPORT

COMPOUND	RESULT	EQL	CODE
Aroclor-1016		37	ND
Aroclor-1221		74	ND
Aroclor-1232		37	ND
Aroclor-1242		37	ND
Aroclor-1248		37	ND
Aroclor-1254		37	ND
Aroclor-1260		37	ND

ND = Not Detected

11/2/93

Approval Signature

RMT LABORATORIES
744 Heartland Trail
Phone (608) 831-4444
FAX (608) 831-7530
Atlanta, GA
Baton Rouge, LA
Troy, MI
Nashville, TN
Schaumburg, IL
Waukesha

F-268 (R2/92)
(Use Black Ink Only)

CHAIN OF CUSTODY RECORD

№ 040485

Bottles Prepared by: San Turner
Date/Time: 10/8/93

Project No.: 701442
Client: SKF-Asheville

WO #3411

HMT Yr. 93

Lab NO.	Date	Time	Sample Station ID	Total Number Of Containers	Container Inventory: 4oz Soil Jar	500 ml Amber	40 ml Vom Vial							Comments:
001	10/13	17:55	SB-1 23'-25'	2	2									
002	10/14	17:30	SB-2 - 28-30'	2	2									Will fax
003	10/14	15:20	SB-3 30-30.5'	1	1									work order on
004	10/13	17:55	SB-1 23-25'	1		1								Monday.
005	10/8	—	Trip Blank	3			3							
														Analyze VOCs
														w/ method 8240
														Analyze Semi-VOCs
														w/ method 8270

Filtered (Yes/No)
Preserved (Code)
A A E

MATRIX: Soil
BJW 10/16/93

Code: A - None
B - HNO3
C - H_2SO4
D - NaOH
E - HCl
F - _____

WO #3411
BJW 10/16/93

SAMPLER Relinquished by (Sig.)	Date/Time	Received by (Sig.)	Date/Time
① Kenneth A Lauter	10-14-93 14:30	② Fedex Shipper Name & # 748957535	10-14-93 14:30
Relinquished by (Sig.) ③	Date/Time	Received by (Sig.) ④ Shipper Name & #	Date/Time
Relinquished by (Sig.) ⑤ Fedex	10/15/93 1:20 pm	Received by (Sig.) ⑥ Shipper Name & # Debra Wallapfel	10/15/93 1:20 pm

HAZARDS ASSOCIATED WITH SAMPLES

(For Lab Use Only)
Receipt Temp: 5.0°C
Receipt pH: NA

Custody Seal: NA Present/Absent
Seal
Intact/Not Intact
Seal #'s

WHITE - LABORATORY COPY

APPENDIX C

BORING LOGS FOR WELLS AND SOIL BORINGS INSTALLED BY SKF USA

LOG OF TEST BORING

RMT

BORING NO.	MW-11		
SHEET NO.	1 OF 2		
PROJECT NAME	SKF - ASHEVILLE, NC	PROJECT NO.	70144.01
LOCATION	J.L. dE BALL GIRMES FACILITY	INSTALLATION	
CONTRACTOR	A.E. DRILLING, INC.	SURFACE ELEV.	2106.3
DRILLING METHOD	HSA/AIR HAMMER	BOREHOLE DIA.	6 IN.

SAMPLING NOTES						VISUAL CLASSIFICATION AND GENERAL OBSERVATIONS
INTERVAL		RECOVERY		MOISTURE		
NO.	TYPE	BLOWS	%	%	DEPTH	
	SS	56/4"	10		5	SAND (SM) - silty; dry; fine grained; light tan/cream. [Saprolite]
	SS	50/2"	10		10	- as above. - auger refusal; change to air hammer drilling. - cuttings are tan-blond; silty sand; dry. - cuttings become coarse sand; hard drilling.
					15	GRANITE GNEISS - competent bedrock at 15.0 ft.
					20	- quartz layer approximately 1/2 ft. thick; white angular quartz fragments in cuttings.
					25	AMPHIBOLITE - gray-green; hornblende rich.
					30	- as above.
					35	- as above.

GENERAL NOTES

DATE STARTED	13 OCT 93
DATE COMPLETED	18 OCT 93
RIG	CME-550/SCHRAMM T660
CREW CHIEF	J. O'BRIANT
LOGGED	KAL
CHECKED	DOM

WATER LEVEL OBSERVATIONS

WHILE DRILLING	67.0 FT.
AT COMPLETION	60.2 FT.
AFTER DRILLING	
CAVE-IN: DATE/TIME	DEPTH
WATER: DATE/TIME	DEPTH

LOG OF TEST BORING

RMT

PROJECT NAME	SKF - ASHEVILLE, NC	BORING NO.	MW-11
LOCATION	J.L. dE BALL GIRMES FACILITY	SHEET NO.	2 OF 2
CONTRACTOR	A.E. DRILLING, INC.	PROJECT NO.	70144.01
DRILLING METHOD	HSA/AIR HAMMER	INSTALLATION	
		SURFACE ELEV.	2106.3
		BOREHOLE DIA.	6 IN.

SAMPLING NOTES						VISUAL CLASSIFICATION AND GENERAL OBSERVATIONS
INTERVAL		RECOVERY		MOISTURE		
NO.	TYPE	BLOWS	%	%	DEPTH	
						- as above.
					45	- as above; brown green.
						- very hard drilling; returns are mostly pebble-sized fractured rock; dark green-black.
					50	- cuttings become powdery with few rock fragments.
					55	- as above.
					60	- as above.
					65	- as above; brown; cuttings are moist. - as above; dark greenish black. - same as 61.0 ft. interval.
					70	
					75	- as above.
					80	BORING TERMINATED AT 81.0 FEET
					85	

LOG OF TEST BORING

BORING NO. MW-12
SHEET NO. 1 OF 1

PROJECT NAME SKF - ASHEVILLE
PROJECT NO. 70144.01
LOCATION BUNCOMBE CO./NC DOT FACILITY
INSTALLATION
CONTRACTOR A.E. DRILLING SERVICES
SURFACE ELEV. 2040.7
DRILLING METHOD HSA/AIR HAMMER
BOREHOLE DIA. 6 IN.

SAMPLING NOTES						VISUAL CLASSIFICATION AND GENERAL OBSERVATIONS
INTERVAL		RECOVERY		MOISTURE		
NO.	TYPE	BLOWS	%	%	DEPTH	
						Asphalt - 3 in. thick
1	SS	PUSHED	100			SAND (SM) - fine grained; micaceous; some silt; brown; dry. [Saprolite]
					5	- auger refusal; overdrilled with six in. air hammer.
						- cuttings are brown; moist; silt with some sand.
						- as above; cuttings are dry.
					10	
						GRANITE GNEISS - quartz and feldspar rich; 20% mafics; competent bedrock at 12.0 ft.
					15	- as above; olive brown.
						- as above; light brown.
					20	- as above; medium gray.
						AMPHIBOLITE - horneblend rich.
					25	- hole produces small amount of water.
					30	BORING TERMINATED AT 29.5 FEET
					35	

GENERAL NOTES

DATE STARTED 28 OCT 93
DATE COMPLETED 28 OCT 93
RIG CME-550/SCHRAMM T660
CREW CHIEF O'BRIANT/PHILLIPS
LOGGED CDR CHECKED DOM

WATER LEVEL OBSERVATIONS

WHILE DRILLING ▽ 23.5 FT.
AT COMPLETION ▼ 10.5 FT. BELOW TOC
AFTER DRILLING
CAVE-IN: DATE/TIME _____ DEPTH _____
WATER: DATE/TIME _____ DEPTH _____

LOG OF TEST BORING

RMT

PROJECT NAME	SKF - ASHEVILLE	BORING NO.	MW-13
LOCATION	BUNCOMBE CO./NC DOT FACILITY	SHEET NO.	1 OF 1
CONTRACTOR	A.E. DRILLING SERVICES	PROJECT NO.	70144.01
DRILLING METHOD	HSA/AIR HAMMER	INSTALLATION	
		SURFACE ELEV.	2041.5
		BOREHOLE DIA.	6 IN.

SAMPLING NOTES						VISUAL CLASSIFICATION AND GENERAL OBSERVATIONS
INTERVAL		RECOVERY		MOISTURE		
NO.	TYPE	BLOWS	%	%	DEPTH	
1	SS	PUSHED	100			SILT (ML) - some clay; roots; dry; brown. [Fill]
2	SS	PUSHED	100			- as above; moist.
3	SS	PUSHED	100			SAND (SM) - fine grained; some clay; brown-green; massive; weathered amphibole rich rock. [Saprolite]
						- auger refusal at 9.0 ft.; overdrilled with six inch air hammer.
						- returns are wet.
						- returns are coarse grained angular rock fragments.
						AMPHIBOLITE - gray-green-black; competent bedrock.
						BORING TERMINATED AT 19.0 FEET

5 10 15 20 25 30 35

GENERAL NOTES

DATE STARTED	27 OCT 93
DATE COMPLETED	27 OCT 93
RIG	CME-550/SCHRAMM T660
CREW CHIEF	O'BRIANT/PHILLIPS
LOGGED	CDR
CHECKED	DOM

WATER LEVEL OBSERVATIONS

WHILE DRILLING	8.5 FT.
AT COMPLETION	13.6 FT. BELOW TOC
AFTER DRILLING	
CAVE-IN: DATE/TIME	DEPTH
WATER: DATE/TIME	DEPTH

LOG OF TEST BORING

RMT

PROJECT NAME	SKF - ASHEVILLE, NC	BORING NO.	MW-14
LOCATION	J.L. dE BALL GIRMES FACILITY	SHEET NO.	1 OF 2
CONTRACTOR	A.E. DRILLING, INC.	PROJECT NO.	70144.01
DRILLING METHOD	HSA/AIR HAMMER	INSTALLATION	
		SURFACE ELEV.	2120.0
		BOREHOLE DIA.	10/6 IN.

SAMPLING NOTES						VISUAL CLASSIFICATION AND GENERAL OBSERVATIONS
INTERVAL		RECOVERY		MOISTURE		
NO.	TYPE	BLOWS	%	%	DEPTH	
						Asphalt - six in. thick
1	SS	PUSHED	0			
					5	
2	SS	43-50/2"	1			
					10	SAND (SM) - fine grained; some clay; dry; green-black; fresh rock (amphibolite) in tip of spoon. [Saprolite] - auger refusal at 9.0 ft.; changed to 10.0 in. air hammer; drilled to 12.0 ft. and installed six in. PVC surface casing.
					15	
					20	AMPHIBOLITE - competent bedrock; dark green-black; horneblende rich. - as above; green dusty returns.
					25	- trace of moisture. - as above; cuttings change from green to light brown with depth; slightly moist.
					30	
					35	- as above.

GENERAL NOTES

DATE STARTED	2 NOV 93
DATE COMPLETED	3 NOV 93
RIG	CME-550/SCHRAMM T660
CREW CHIEF	R. PHILLIPS
LOGGED	KAL
CHECKED	DOM

WATER LEVEL OBSERVATIONS

WHILE DRILLING	72.0 FT.	
AT COMPLETION	67.8 FT. BELOW TOC	
AFTER DRILLING		
CAVE-IN: DATE/TIME		DEPTH
WATER: DATE/TIME	11/3 7:00	DEPTH 67.8 FT.

LOG OF TEST BORING

RMT

PROJECT NAME	SKF - ASHEVILLE, NC	BORING NO.	MW-14
LOCATION	J.L. dE BALL GIRMES FACILITY	SHEET NO.	2 OF 2
CONTRACTOR	A.E. DRILLING, INC.	PROJECT NO.	70144.01
DRILLING METHOD	HSA/AIR HAMMER	INSTALLATION	
		SURFACE ELEV.	2120.0
		BOREHOLE DIA.	10/6 IN.

SAMPLING NOTES						VISUAL CLASSIFICATION AND GENERAL OBSERVATIONS
INTERVAL		RECOVERY		MOISTURE		
NO.	TYPE	BLOWS	%	%	DEPTH	
						- six in. thick white quartz layer.
						- as above; gray-green.
					45	- as above; brown.
						- as above; green at 45.5 ft.
						- as above; brown.
						- as above; green.
					50	- as above.
						- very hard drilling at 53.0 ft.
					55	- as above; slate gray.
					60	- as above.
					65	
						- quartz vein at 68.0 ft.; milky white fractured crystals.
					70	
						- cuttings turn damp.
						- as above; moist.
					75	
					80	BORING TERMINATED AT 80.3 FEET
					85	

LOG OF TEST BORING

PROJECT NAME	SKF - ASHEVILLE	BORING NO.	MW-15
LOCATION	BUNCOMBE CO./NC DOT FACILITY	SHEET NO.	1 OF 1
CONTRACTOR	A.E. DRILLING SERVICES	PROJECT NO.	70144.01
DRILLING METHOD	AIR HAMMER	INSTALLATION	
		SURFACE ELEV.	2058.2
		BOREHOLE DIA.	10 IN.

SAMPLING NOTES						VISUAL CLASSIFICATION AND GENERAL OBSERVATIONS
INTERVAL		RECOVERY		MOISTURE		
NO.	TYPE	BLOWS	%	%	DEPTH	
					5	
					10	NOTE: Borehole was drilled to total depth with a 10 in. air hammer. Due to lack of borehole stability, 6 1/4 in. ID hollow stem augers were inserted into the borehole, and the well was installed through the augers as they were withdrawn.
					▼	
					15	See Boring log MW-15A for lithology.
					20	
					25	
					30	
					35	BORING TERMINATED AT 33.0 FEET

GENERAL NOTES

DATE STARTED	25 OCT 93
DATE COMPLETED	25 OCT 93
RIG	SCHRAMM T-660
CREW CHIEF	J. O'BRIANT
LOGGED	KAL
CHECKED	DOM

WATER LEVEL OBSERVATIONS

WHILE DRILLING ▽	12.5 FT.
AT COMPLETION ▼	12.5 FT. BELOW TOC
AFTER DRILLING	
CAVE-IN: DATE/TIME	DEPTH
WATER: DATE/TIME	DEPTH

LOG OF TEST BORING

RMT

PROJECT NAME	SKF - ASHEVILLE	BORING NO.	MW-15A
LOCATION	BUNCOMBE CO./NC DOT FACILITY	SHEET NO.	1 OF 2
CONTRACTOR	A.E. DRILLING SERVICES	PROJECT NO.	70144.01
DRILLING METHOD	HOLLOW STEM AUGER	INSTALLATION	
		SURFACE ELEV.	2058.2
		BOREHOLE DIA.	10 IN.

SAMPLING NOTES						VISUAL CLASSIFICATION AND GENERAL OBSERVATIONS
INTERVAL		RECOVERY		MOISTURE		
NO.	TYPE	BLOWS	%	%	DEPTH	
						ASPHALT - 2 in. surface treatment; 6 in. gravel sublayer.
						CLAY (CL) - silty; few gravel; orange; moist. [Fill]
					5	- as above; micaceous.
						SILT (ML) - some clay; micaceous; loose; moist. [Residual Soil]
					10	SAND (SM) - fine to medium grained; micaceous; orange, white, black; moist; relict foliations. [Saprolite]
						- as above; saturated.
					15	
						- as above.
					20	SAND (SC) - coarse grained; fractured angular quartz; wet.
						SAND (SM) - fine to medium grained; micaceous; orange, white, black; wet; relict foliations. [Saprolite]
					25	- as above.
					30	- as above.
					35	- as above; relict foliations become nearly vertical at 34.5 ft.

GENERAL NOTES

DATE STARTED	18 OCT 93
DATE COMPLETED	21 OCT 93
RIG	CME-550 ATV
CREW CHIEF	J. O'BRIANT
LOGGED	KAL
CHECKED	DOM

WATER LEVEL OBSERVATIONS

WHILE DRILLING	13.0 FT.
AT COMPLETION	11.2 FT. BELOW TOC
AFTER DRILLING	
CAVE-IN: DATE/TIME	DEPTH
WATER: DATE/TIME	DEPTH

LOG OF TEST BORING

BORING NO. MW-15A
SHEET NO. 2 OF 2

PROJECT NAME SKF - ASHEVILLE
PROJECT NO. 70144.01
LOCATION BUNCOMBE CO./NC DOT FACILITY
INSTALLATION
CONTRACTOR A.E. DRILLING SERVICES
SURFACE ELEV. 2058.2
DRILLING METHOD HOLLOW STEM AUGER
BOREHOLE DIA. 10 IN.

SAMPLING NOTES						VISUAL CLASSIFICATION AND GENERAL OBSERVATIONS
INTERVAL		RECOVERY		MOISTURE		
NO.	TYPE	BLOWS	%	%	DEPTH	
						- as above.
					45	- as above; foliations dip at 45° angle.
					50	SAND (SM) fine grained; orange-green; micaceous; schistose structure; few pebble-sized garnets; wet. [Saprolite]
					55	SAND (SM) - saprolite is granitic gneiss with biotite and muscovite mica; foliation dips 45°.
						- difficult drilling.
					60	- as above.
						- as above; competent rock in tip of spoon.
					65	BORING TERMINATED AT 65.0 FEET Auger Refusal
					70	
					75	
					80	
					85	

LOG OF TEST BORING

RMT

PROJECT NAME	SKF - ASHEVILLE	BORING NO.	MW-16
LOCATION	BUNCOMBE CO./NC DOT FACILITY	SHEET NO.	1 OF 1
CONTRACTOR	A.E. DRILLING SERVICES	PROJECT NO.	70144.01
DRILLING METHOD	AIR HAMMER	INSTALLATION	
		SURFACE ELEV.	2059.2
		BOREHOLE DIA.	10 IN.

SAMPLING NOTES						VISUAL CLASSIFICATION AND GENERAL OBSERVATIONS
INTERVAL		RECOVERY		MOISTURE		
NO.	TYPE	BLOWS	%	%	DEPTH	
					5	
					10	NOTE: Borehole was drilled to total depth with a 10 in. air hammer. Due to lack of borehole stability, 6 1/4 in. ID hollow stem augers were inserted into the borehole, and the well was installed through the augers as they were withdrawn.
					15	See Boring Log MW-16A for lithology.
					20	
					25	BORING TERMINATED AT 25.0 FEET
					30	
					35	

GENERAL NOTES

DATE STARTED	3 NOV 93
DATE COMPLETED	3 NOV 93
RIG	SCHRAMM T-660
CREW CHIEF	R. PHILLIPS
LOGGED	KAL
CHECKED	DOM

WATER LEVEL OBSERVATIONS

WHILE DRILLING	7.0 FT.
AT COMPLETION	6.6 FT. BELOW TOC
AFTER DRILLING	
CAVE-IN: DATE/TIME	DEPTH
WATER: DATE/TIME	DEPTH

LOG OF TEST BORING

RMT

BORING NO. MW-16A
SHEET NO. 1 OF 1

PROJECT NAME SKF - ASHEVILLE
PROJECT NO. 70144.01
LOCATION BUNCOMBE CO./NC DOT FACILITY
INSTALLATION
CONTRACTOR A.E. DRILLING SERVICES
SURFACE ELEV. 2059.2
DRILLING METHOD HOLLOW STEM AUGER
BOREHOLE DIA. 10 IN.

SAMPLING NOTES						VISUAL CLASSIFICATION AND GENERAL OBSERVATIONS
INTERVAL		RECOVERY		MOISTURE		
NO.	TYPE	BLOWS	%	%	DEPTH	
						Asphalt and Gravel - one ft. thick
						CLAY (CL) - silty; brown-orange. [Fill]
1	SS	4-4 9-18	75			SAND (SM) - silty; trace of clay; gneissic banding; black-green; trace of moisture. [Saprolite]
					5	
2	SS	5-7 12-19	75			- as above; wet; iron oxidized along remnant fractures; more massive than foliated.
					10	
3	SS	12-19 16-18	100			GRANITIC GNEISS - weathered; intrusion to 13.9 ft.
						SAND (SM) - silty; trace of clay; gray; wet; becoming more iron stained. [Saprolite]
					15	
						- difficult drilling from 15.0 to 18.0 ft.
4	SS	15-31 30-28	100			
					20	- as above; massive; amphibole rich with few feldspar; not iron stained.
5	SS	31-50/5"	55			
					25	
6	SS	25-50/4"	40			- as above.
					30	
7	SS	36-50/3"	25			- as above.
					35	BORING TERMINATED AT 34.5 FEET Auger Refusal

GENERAL NOTES

DATE STARTED 27 OCT 93
DATE COMPLETED 27 OCT 93
RIG CME-550 ATV
CREW CHIEF J. O'BRIANT
LOGGED KAL CHECKED DOM

WATER LEVEL OBSERVATIONS

WHILE DRILLING ▽ 8.0 FT.
AT COMPLETION ▼ 6.4 FT. BELOW TOC
AFTER DRILLING
CAVE-IN: DATE/TIME _____ DEPTH _____
WATER: DATE/TIME _____ DEPTH _____

LOG OF TEST BORING

RMT

BORING NO.	MW-17		
SHEET NO.	1 OF 1		
PROJECT NAME	SKF - ASHEVILLE	PROJECT NO.	70144.01
LOCATION	BUNCOMBE CO./NC DOT FACILITY	INSTALLATION	
CONTRACTOR	A.E. DRILLING SERVICES	SURFACE ELEV.	2056.7
DRILLING METHOD	HSA/AIR HAMMER	BOREHOLE DIA.	10 IN.

SAMPLING NOTES						VISUAL CLASSIFICATION AND GENERAL OBSERVATIONS
INTERVAL		RECOVERY		MOISTURE		
NO.	TYPE	BLOWS	%	%	DEPTH	
						Asphalt and Gravel - one ft. thick.
1	SS	4-5 5-3	25		5	CLAY (CL) - silty; olive and gray; trace of moisture. [Fill] - as above; brown.
2	SS	9-22 20-39	100			- as above to 8.7 ft.; mica rich.
					10	SAND (SM) - fine to medium grained; red-brown; micaceous lenses; dry. [Saprolite] - auger and spoon refusal at 11.0 ft.; overdrill with ten inch air hammer. - quartz layer 11.0 to 12.0 ft.; cuttings are yellow-white.
					15	
					20	GRANITE GNEISS - competent bedrock.
					25	- cuttings are powdery-white dust. - water bearing fracture at 23.5 ft.
					30	
					35	BORING TERMINATED AT 32.0 FEET

GENERAL NOTES

DATE STARTED	28 OCT 93
DATE COMPLETED	29 OCT 93
RIG	CME-550/SCHRAMM T660
CREW CHIEF	O'BRIANT/PHILLIPS
LOGGED	KAL
CHECKED	DOM

WATER LEVEL OBSERVATIONS

WHILE DRILLING	▽	23.5 FT.
AT COMPLETION	▼	12.8 FT. BELOW TOC
AFTER DRILLING		
CAVE-IN: DATE/TIME		DEPTH
WATER: DATE/TIME		DEPTH

LOG OF TEST BORING

RMT

PROJECT NAME	SKF - ASHEVILLE, NC	BORING NO.	SB-1
LOCATION	J.L. dE BALL GIRMES FACILITY	SHEET NO.	1 OF 1
CONTRACTOR	A.E. DRILLING, INC.	PROJECT NO.	70144.01
DRILLING METHOD	HOLLOW STEM AUGER	INSTALLATION	
		SURFACE ELEV.	2120.8
		BOREHOLE DIA.	8 IN.

SAMPLING NOTES						VISUAL CLASSIFICATION AND GENERAL OBSERVATIONS
INTERVAL		RECOVERY		PID		
NO.	TYPE	BLOWS	%	(ppm)	DEPTH	
						SANDY SILT (SM) - loose; dry.
						Concrete rubble - boulder size.
1	SS		10	0.6		SILT (ML) - some sand; brown; dry; roots. [Fill]
					5	
2	SS		20	1.2		- as above; some mica.
					10	
3	SS		15	4.0		- as above; dark brown; iron stained. - no cuttings return.
					15	
4	SS		90	5.8	▽	- PID reading from borehole = 39.7 ppm - black, brown; crumbly; metallic oxides; wet; volatile organic odor. [Fill]
					20	
5	SS		100	7.5		- PID reading from borehole = 38.0 ppm - as above; increasing sand content.
					25	Auger refusal at 25.5 ft.
						BOREHOLE TERMINATED AT 25.5 FEET
					30	
					35	

GENERAL NOTES

DATE STARTED	13 OCT 93
DATE COMPLETED	13 OCT 93
RIG	CME-550 ATV
CREW CHIEF	J. O'BRIANT
LOGGED	KAL
CHECKED	DOM

WATER LEVEL OBSERVATIONS

WHILE DRILLING ▽	18.0 FT.		
AT COMPLETION ▼			
AFTER DRILLING			
CAVE-IN: DATE/TIME		DEPTH	
WATER: DATE/TIME		DEPTH	

LOG OF TEST BORING

RMT

PROJECT NAME	SKF - ASHEVILLE, NC	BORING NO.	SB-2
LOCATION	J.L. dE BALL GIRMES FACILITY	SHEET NO.	1 OF 1
CONTRACTOR	A.E. DRILLING, INC.	PROJECT NO.	70144.01
DRILLING METHOD	HOLLOW STEM AUGER	INSTALLATION	
		SURFACE ELEV.	2121.8
		BOREHOLE DIA.	8 IN.

SAMPLING NOTES						VISUAL CLASSIFICATION AND GENERAL OBSERVATIONS
INTERVAL		RECOVERY		PID		
NO.	TYPE	BLOWS	%	(ppm)	DEPTH	
						SILTY SAND (SM) - brown; dry; concrete rubble; roots. [Fill]
1	SS	3-5 5-4	50	34.6		CLAY (CL) - brown; dry; roots; pieces of fiberglass insulation. [Fill]
					5	
2	SS	2-2 3-3	60	9.0		SILTY SAND (SM) - brown, orange; some clay; trace of moisture; mica rich. [Saprolite]
					10	
3	SS	9-8 9-6	50	4.6		- as above.
					15	
4	SS	3-4 4-3	40	16.0		- as above.
					20	
5	SS	5-5 4-4	0	—		- no recovery. - volatile odor from cuttings.
					25	
6	SS	17-23 33-40	90	16.3		SAND (SM) - fine grained; silty matrix; foliated; black and white. [Saprolite] [Granitic Gneiss]
					30	
7	SS	41-50/2"	45	5.4		- as above; moist. Auger refusal at 33.5 ft.
					35	BOREHOLE TERMINATED AT 33.5 FEET

GENERAL NOTES

DATE STARTED	14 OCT 93
DATE COMPLETED	14 OCT 93
RIG	CME-550 ATV
CREW CHIEF	R. PHILLIPS
LOGGED	KAL
CHECKED	DOM

WATER LEVEL OBSERVATIONS

WHILE DRILLING	
AT COMPLETION	
AFTER DRILLING	
CAVE-IN: DATE/TIME	DEPTH
WATER: DATE/TIME	DEPTH

LOG OF TEST BORING

RMT

PROJECT NAME	SKF - ASHEVILLE, NC	BORING NO.	SB-3
LOCATION	J.L. dE BALL GIRMES FACILITY	SHEET NO.	1 OF 1
CONTRACTOR	A.E. DRILLING, INC.	PROJECT NO.	70144.01
DRILLING METHOD	HOLLOW STEM AUGER	INSTALLATION	
		SURFACE ELEV.	2123.5
		BOREHOLE DIA.	8 IN.

SAMPLING NOTES						VISUAL CLASSIFICATION AND GENERAL OBSERVATIONS
INTERVAL		RECOVERY		PID		
NO.	TYPE	BLOWS	%	(ppm)	DEPTH	
						GRAVEL (GW) - (crusher run)
1	SS	6-5 10-8	75	0.0		SAND (SM) - fine grained; some silt; trace clay; dry. [Fill]
					5	SAND (SP) - medium to coarse grained; micaceous; quartz rich; massive; dry. [Saprolite]
2	SS	4-4 5-5	100	0.0		- as above; some clay.
					10	
3	SS	3-2 4-6	90	0.0		SILT (ML) - clayey; micaceous; orange-purple, white; trace of moisture. [Saprolite]
					15	
4	SS	5-5 10-8	100	5.4		SAND (SP) - medium to coarse grained; micaceous; quartz rich; massive; dry. [Saprolite] - as above; some clay.
					20	
5	SS	6-3 8-10	75	3.8		- as above.
					25	
6	SS	50/6"	0			- difficult drilling.
7	SS	50/4"	5	14.4		- spoon refusal.
					30	SILT (ML) - micaceous; light brown; moist. [Saprolite] Auger refusal.
						BORING TERMINATED AT 30.5 FEET
					35	

GENERAL NOTES

DATE STARTED	14 OCT 93
DATE COMPLETED	14 OCT 93
RIG	CME-550 ATV
CREW CHIEF	J. O'BRIANT
LOGGED	KAL
CHECKED	DOM

WATER LEVEL OBSERVATIONS

WHILE DRILLING ▽

AT COMPLETION ▼

AFTER DRILLING

CAVE-IN: DATE/TIME _____ DEPTH _____

WATER: DATE/TIME _____ DEPTH _____

KMI

LOG OF TEST BORING

BORING NO. MW-18
SHEET NO. 1 OF 1

PROJECT NAME SKF - ASHEVILLE, NC
PROJECT NO. 70144.01
LOCATION J.L. dE BALL GIRMES FACILITY
INSTALLATION
CONTRACTOR A.E. DRILLING, INC.
SURFACE ELEV. 2033.8
DRILLING METHOD HSA/AIR HAMMER
BOREHOLE DIA. 10/6 IN.

SAMPLING NOTES						VISUAL CLASSIFICATION AND GENERAL OBSERVATIONS
INTERVAL		RECOVERY		MOISTURE		
NO.	TYPE	BLOWS	%	%	DEPTH	
1	GRAB					SILTY SAND (SM) - fine to medium grained; roots; organic material; occasional angular cobble of gray-green amphibolite; brown; dry. [Residuum].
2	GRAB				5	SAND (SM) - fine to medium grained; silty; trace of clay; moist; brown to gray. [Saprolite]
						- installed surface casing to 10.0 ft.
3	GRAB				10	- drilled out with 5 7/8 in. air hammer on 4/14/94.
						Auger Refusal
						AMPHIBOLITE - gray-green bedrock.
4	GRAB				15	
						- as above.
5	GRAB				20	
						- weathered layer; returns are orange silty sand; yields some water.
						- large fracture at 23.0 ft.; yields large amount of water.
					25	BORING TERMINATED AT 25.0 FEET
					30	
					35	

GENERAL NOTES

DATE STARTED 12 APR 94
DATE COMPLETED 14 APR 94
RIG CME-750 ATV
CREW CHIEF K. WARREN
LOGGED KAL CHECKED DOM

WATER LEVEL OBSERVATIONS

WHILE DRILLING ▽ 6.0 FT.
AT COMPLETION ▼ 7.5 FT.
AFTER DRILLING
CAVE-IN: DATE/TIME DEPTH
WATER: DATE/TIME 4/14/94 DEPTH 23.5 FT.

LOG OF TEST BORING

PROJECT NAME	SKF - ASHEVILLE, NC	BORING NO.	MW-19
LOCATION	J.L. dE BALL GIRMES FACILITY	SHEET NO.	1 OF 1
CONTRACTOR	A.E. DRILLING, INC.	PROJECT NO.	70144.01
DRILLING METHOD	HSA/AIR HAMMER	INSTALLATION	
		SURFACE ELEV.	2038.5
		BOREHOLE DIA.	10/6 IN.

SAMPLING NOTES						VISUAL CLASSIFICATION AND GENERAL OBSERVATIONS
INTERVAL		RECOVERY		MOISTURE		
NO.	TYPE	BLOWS	%	%	DEPTH	
1	GRAB					SILTY SAND (SM) - roots; organic material; few cobbles of gray amphibolite; gray-brown; dry. [Residuum]
					5	- dense at 5.5 ft.
2	GRAB					SAND (SM) - fine to medium grained; silty; trace of clay; trace of moisture; gray. [Saprolite]
					10	
						Auger Refusal
					15	AMPHIBOLITE - competent bedrock; very hard drilling.
3	GRAB					
4	GRAB				20	- as above.
					25	- as above.
5	GRAB					
					30	- fracture at 30.0 to 30.5 ft.; yields orange, muddy water.
						BORING TERMINATED AT 31.0 FEET
					35	

GENERAL NOTES

DATE STARTED	12 APR 94
DATE COMPLETED	13 APR 94
RIG	CME-750 ATV
CREW CHIEF	K. WARREN
LOGGED	KAL
CHECKED	DOM

WATER LEVEL OBSERVATIONS

WHILE DRILLING	23.9 FT.		
AT COMPLETION			
AFTER DRILLING			
CAVE-IN: DATE/TIME		DEPTH	
WATER: DATE/TIME	4/23/94	DEPTH	21.95 FT.

BORING NO. MW-20
SHEET NO. 1 OF 1

PROJECT NAME SKF - ASHEVILLE
PROJECT NO. 70144.02
LOCATION BUNCOMBE CO/NC DOT FACILITY
INSTALLATION
CONTRACTOR A.E. DRILLING, INC.
SURFACE ELEV. 2027.6
DRILLING METHOD HOLLOW STEM AUGER
BOREHOLE DIA. 10.25 IN.

SAMPLING NOTES						VISUAL CLASSIFICATION AND GENERAL OBSERVATIONS
INTERVAL		RECOVERY		MOISTURE		
NO.	TYPE	BLOWS	%	%	DEPTH	
1	GRAB					FILL - coarse gravel.
						FILL - silt and clay; dense; brown.
2	GRAB				5	- as above; orange color.
3	GRAB				10	
						SAND (SM) - silty; fine to medium grained; gray; some mica; moist. [Alluvial]
4	GRAB				15	- as above; wet.
					20	- harder drilling.
						BORING TERMINATED AT 23.0 FEET
					25	
					30	
					35	

GENERAL NOTES

DATE STARTED 13 APR 94
DATE COMPLETED 13 APR 94
RIG CME-750 ATV
CREW CHIEF K. WARREN
LOGGED KAL CHECKED DOM

WATER LEVEL OBSERVATIONS

WHILE DRILLING ▽ 15.8 FT.
AT COMPLETION ▼ 13.5 FT.
AFTER DRILLING
CAVE-IN: DATE/TIME _____ DEPTH _____
WATER: DATE/TIME _____ DEPTH _____

LOG OF TEST BORING

KMI

PROJECT NAME	SKF - ASHEVILLE, NC	BORING NO.	MW-21
LOCATION	J.L. dE BALL GIRMES FACILITY	SHEET NO.	1 OF 1
CONTRACTOR	A.E. DRILLING, INC.	PROJECT NO.	70144.01
DRILLING METHOD	AIR HAMMER	INSTALLATION	
		SURFACE ELEV.	2033.9
		BOREHOLE DIA.	6 IN.

SAMPLING NOTES						VISUAL CLASSIFICATION AND GENERAL OBSERVATIONS
INTERVAL		RECOVERY		MOISTURE		
NO.	TYPE	BLOWS	%	%	DEPTH	
1	GRAB					SILTY SAND (SM) - fine to medium grained; roots; some organic material; orange-brown; wet. [Residuum]
2	GRAB				5	SILTY SAND (SM) - fine to medium grained; orange -brown; wet. [Saprolite] - hard rock layer to 6.0 ft. - brown to orange; wet.
3	GRAB				10	- as above; gray; wet.
4	GRAB				15	AMPHIBOLITE - competent bedrock; gray to green.
					20	- as above; dry.
					25	- water bearing fracture at 24.8 ft. - returns are dry.
						BORING TERMINATED AT 28.0 FEET
					30	
					35	

GENERAL NOTES

DATE STARTED	14 APR 94
DATE COMPLETED	14 APR 94
RIG	CME-750 ATV
CREW CHIEF	K. WARREN
LOGGED	KAL
CHECKED	DOM

WATER LEVEL OBSERVATIONS

WHILE DRILLING	6.0 FT.
AT COMPLETION	10.8 FT.
AFTER DRILLING	
CAVE-IN: DATE/TIME	DEPTH
WATER: DATE/TIME	DEPTH

LOG OF TEST BORING

BORING NO.	MW-22		
SHEET NO.	1 OF 2		
PROJECT NAME	SKF - ASHEVILLE, NC	PROJECT NO.	70144.01
LOCATION	J.L. dE BALL GIRMES FACILITY	INSTALLATION	
CONTRACTOR	A.E. DRILLING, INC.	SURFACE ELEV.	2082.4
DRILLING METHOD	AIR HAMMER	BOREHOLE DIA.	6 IN.

SAMPLING NOTES						VISUAL CLASSIFICATION AND GENERAL OBSERVATIONS
INTERVAL		RECOVERY		MOISTURE		
NO.	TYPE	BLOWS	%	%	DEPTH	
1	GRAB					SILTY SAND (SM) - fine to medium grained; some roots; some organic material; orange-brown; dry. [Residuum]
2	GRAB				5	SILTY SAND (SM) - fine to medium grained; micaceous; orange-brown; dry. [Saprolite]
3	GRAB				10	MICA SCHIST - competent bedrock; orange to brown; micaceous.
						PEGMATITE - coarse grained; feldspar and quartz; white.
4	GRAB					MICA SCHIST - orange to tan; micaceous.
					15	
5	GRAB				20	- as above.
6	GRAB				25	- as above.
7	GRAB				30	- as above.
8	GRAB				35	
						- cuttings consist of large flakes of muscovite mica.
						- hard drilling; felsic rich rock.
9	GRAB					GRANITIC GNEISS - very hard drilling to 40.0 ft.

GENERAL NOTES

DATE STARTED	15 APR 94
DATE COMPLETED	18 APR 94
RIG	CME-750 ATV
CREW CHIEF	K. WARREN
LOGGED	KAL
CHECKED	DOM

WATER LEVEL OBSERVATIONS

WHILE DRILLING	42.5 FT.	
AT COMPLETION	42.8 FT.	
AFTER DRILLING		
CAVE-IN: DATE/TIME		DEPTH
WATER: DATE/TIME	4/18/94	DEPTH 42.5 FT.

LOG OF TEST BORING

RMT

PROJECT NAME	SKF - ASHEVILLE, NC	BORING NO.	MW-22
LOCATION	J.L. dE BALL GIRMES FACILITY	SHEET NO.	2 OF 2
CONTRACTOR	A.E. DRILLING, INC.	PROJECT NO.	70144.01
DRILLING METHOD	AIR HAMMER	INSTALLATION	
		SURFACE ELEV.	2082.4
		BOREHOLE DIA.	6 IN.

SAMPLING NOTES						VISUAL CLASSIFICATION AND GENERAL OBSERVATIONS
INTERVAL		RECOVERY		MOISTURE		
NO.	TYPE	BLOWS	%	%	DEPTH	
10	GRAB					- as above.
11	GRAB					MICA SCHIST - softer drilling; returns are moist.
					45	
12	GRAB					AMPHIBOLITE - gray-green; dry; hard drilling.
					50	- as above.
					55	
						BORING TERMINATED AT 56.0 FEET
					60	
					65	
					70	
					75	
					80	
					85	

PROJECT NAME	SKF - ASHEVILLE	SHEET NO. 1 OF 1	
LOCATION	DOTSON METAL FINISHING	PROJECT NO.	70144.02
CONTRACTOR	A.E. DRILLING, INC.	INSTALLATION	
DRILLING METHOD	HSA/AIR HAMMER	SURFACE ELEV.	2025.2
		BOREHOLE DIA.	12.5/5.9 IN.

SAMPLING NOTES						VISUAL CLASSIFICATION AND GENERAL OBSERVATIONS
INTERVAL		RECOVERY		MOISTURE		
NO.	TYPE	BLOWS	%	%	DEPTH	
1	GRAB					ALLUVIUM - sand; silt; occasional rounded pebbles; roots; brown to orange; moist.
2	GRAB				5	GRAVEL (GM) - cobble-sized gravel (>3.0 in.); rounded; silty sand matrix; micaceous; wet. [Alluvium]
3	GRAB					
4	GRAB				10	SILTY SAND (SM) - fine grained; massive; hard; gray-green; feldspars weathered to kaolinitic clay; trace of mica; wet. [Saprolite]
					15	
						Auger Refusal at 17.5 ft.
5	GRAB				20	- installed surface casing to 17.5 ft. - drilled out with 5 7/8 in. air hammer on 8/4/94. - bedrock; gray, green amphibolite. - large fracture at 21.6 ft.; yields water freely.
					25	
					30	
						BORING TERMINATED AT 31.8 FEET
					35	

GENERAL NOTES

DATE STARTED	3 AUG 94
DATE COMPLETED	4 AUG 94
RIG	CME-750 ATV
CREW CHIEF	K. WARREN
LOGGED	KAL
CHECKED	DOM

WATER LEVEL OBSERVATIONS

WHILE DRILLING	21.6 FT.
AT COMPLETION	3.9 FT.
AFTER DRILLING	
CAVE-IN: DATE/TIME	DEPTH
WATER: DATE/TIME	DEPTH

KMI

LOG OF TEST BORING

BORING NO. MW-24
SHEET NO. 1 OF 1

PROJECT NAME SKF - ASHEVILLE
PROJECT NO. 70144.02
LOCATION J.L. deBALL GIRMES, INC.
INSTALLATION
CONTRACTOR A.E. DRILLING, INC.
SURFACE ELEV. 2033.1
DRILLING METHOD HSA/AIR HAMMER
BOREHOLE DIA. 10.5/5.9 IN.

SAMPLING NOTES						VISUAL CLASSIFICATION AND GENERAL OBSERVATIONS
INTERVAL		RECOVERY		MOISTURE		
NO.	TYPE	BLOWS	%	%	DEPTH	
1	GRAB					FILL - loose; silty; clayey; micaceous; brown.
2	GRAB					SAND (SM) - silty; trace of mica; some angular quartz; roots; brown; moist. [Residuum]
3	GRAB				5	SAND (SM) - silty; trace of mica; hard; olive brown; dry. [Saprolite]
						Auger Refusal
4	GRAB				10	- continued drilling with 5 7/8 in. air hammer.
						AMPHIBOLITE - weathered bedrock; returns are alternately green or brown silty sand.
					15	- as above.
5	GRAB					MICA SCHIST - bedrock; returns are loose, sandy silt; some mica.
6	GRAB					- quartz layer at 18.0 ft; 6.0 in. thick.
					20	
7	GRAB					- as above; returns are moist.
					25	
8	GRAB					- as above.
9	GRAB					
					30	- as above.
						- small amount of water with returns.
10	GRAB					
					35	PEGMATITE - returns are large quartz crystals; broken, iron stains on fracture faces.
11	GRAB					MICA SCHIST
12	GRAB					AMPHIBOLITE - gray-green; competent.
						BORING TERMINATED AT 38.0 FEET

GENERAL NOTES

DATE STARTED 4 AUG 94
DATE COMPLETED 5 AUG 94
RIG CME-750 ATV
CREW CHIEF K. WARREN
LOGGED KAL CHECKED DOM

WATER LEVEL OBSERVATIONS

WHILE DRILLING ▽ 31.5 FT.
AT COMPLETION ▼
AFTER DRILLING
CAVE-IN: DATE/TIME DEPTH
WATER: DATE/TIME DEPTH

LOG OF TEST BORING

KMI

PROJECT NAME	SKF - ASHEVILLE	BORING NO.	MW-25
LOCATION	DOTSON METAL FINISHING	SHEET NO.	1 OF 1
CONTRACTOR	A.E. DRILLING, INC.	PROJECT NO.	70144.02
DRILLING METHOD	HOLLOW STEM AUGER	INSTALLATION	
		SURFACE ELEV.	2024.6
		BOREHOLE DIA.	10.5 IN.

SAMPLING NOTES						VISUAL CLASSIFICATION AND GENERAL OBSERVATIONS
INTERVAL		RECOVERY		MOISTURE		
NO.	TYPE	BLOWS	%	%	DEPTH	
1	GRAB					ALLUVIUM - sand; silt; clay; some fill; occasional piece of metal trash; roots; orange; moist.
2	GRAB				5	GRAVEL (GM) - cobble-sized gravel (>3.0 in.); rounded; silty sand matrix; trace of mica; brown; wet. [Alluvium]
3	GRAB				10	SAND (SM) - massive; hard; gray-green; weathered amphibolite; wet. [Saprolite]
4	GRAB					- as above.
5	GRAB				15	SAND (SM) - micaceous; brown; weathered mica schist; wet. [Saprolite]
						BORING TERMINATED AT 18.5 FEET
					20	
					25	
					30	
					35	

GENERAL NOTES

DATE STARTED	4 AUG 94
DATE COMPLETED	4 AUG 94
RIG	CME-750 ATV
CREW CHIEF	K. WARREN
LOGGED	KAL
CHECKED	DOM

WATER LEVEL OBSERVATIONS

WHILE DRILLING	6.0 FT.
AT COMPLETION	
AFTER DRILLING	
CAVE-IN: DATE/TIME	DEPTH
WATER: DATE/TIME	DEPTH

LOG OF TEST BORING

PROJECT NAME	SKF - ASHEVILLE	BORING NO.	MW-26
LOCATION	DOTSON METAL FINISHING	SHEET NO.	1 OF 1
CONTRACTOR	A.E. DRILLING, INC.	PROJECT NO.	70144.02
DRILLING METHOD	HOLLOW STEM AUGER	INSTALLATION	
		SURFACE ELEV.	2021.0
		BOREHOLE DIA.	10.25 IN.

SAMPLING NOTES						VISUAL CLASSIFICATION AND GENERAL OBSERVATIONS
INTERVAL		RECOVERY		MOISTURE		
NO.	TYPE	BLOWS	%	%	DEPTH	
1	GRAB					ALLUVIUM - sand; silt; clay; roots; occasional fill piece of metal; moist.
						- wet at 4.0 ft.
2	GRAB				5	GRAVEL (GM) - cobble-sized gravel (>3.0 in.); rounded; silty sand matrix; trace of mica; brown; wet. [Alluvium]
3	GRAB					
4	GRAB				10	SAND (SM) - fine to medium grained; silty; massive; hard; gray-green; weathered amphibolite; wet. [Saprolite]
					15	
5	GRAB					- rock chips in cuttings.
					20	BORING TERMINATED AT 19.0 FEET Auger Refusal
					25	
					30	
					35	

GENERAL NOTES

DATE STARTED	3 AUG 94
DATE COMPLETED	3 AUG 94
RIG	CME-750 ATV
CREW CHIEF	K. WARREN
LOGGED	KAL
CHECKED	DOM

WATER LEVEL OBSERVATIONS

WHILE DRILLING	4.0 FT.
AT COMPLETION	2.3 FT.
AFTER DRILLING	
CAVE-IN: DATE/TIME	DEPTH
WATER: DATE/TIME	DEPTH

BORING NO. MW-27
SHEET NO. 1 OF 1

PROJECT NAME SKF - ASHEVILLE
PROJECT NO. 70144.02
LOCATION J.L. deBALL GIRMES, INC.
INSTALLATION
CONTRACTOR A.E. DRILLING, INC.
SURFACE ELEV. 2048.8
DRILLING METHOD AIR HAMMER
BOREHOLE DIA. 5.8 IN.

SAMPLING NOTES						VISUAL CLASSIFICATION AND GENERAL OBSERVATIONS
INTERVAL		RECOVERY		MOISTURE		
NO.	TYPE	BLOWS	%	%	DEPTH	
1	GRAB					SAND (SM) - clayey; roots; orange-brown. [Saprolite]
2	GRAB				5	- white quartz layer approximately 6.0 in. thick. - returns are rust colored dust; dry. - as above; gray.
					10	SAND (SM) - fine to medium grained; some mica; mauve to brown; dry. [Saprolite]
3	GRAB					- weathered mica schist; few potassium feldspars.
4	GRAB				15	- easy drilling through weathered bedrock from 13.0 - 17.0 ft.
5	GRAB				20	- competent bedrock; hard drilling.
6	GRAB					AMPHIBOLITE - bedrock; massive; gray-green.
7	GRAB				25	- fractured; returns are moist. - competent bedrock.
8	GRAB				30	- fractured; returns are moist.
9	GRAB				35	- weathered zone at 34.0 ft.; returns are orange colored; moist.
						BORING TERMINATED AT 38.0 FEET

GENERAL NOTES

DATE STARTED 9 AUG 94
DATE COMPLETED 9 AUG 94
RIG CME-750 ATV
CREW CHIEF K. WARREN
LOGGED KAL CHECKED DOM

WATER LEVEL OBSERVATIONS

WHILE DRILLING ▽ 25.0 FT.
AT COMPLETION ▼ 26.0 FT.
AFTER DRILLING
CAVE-IN: DATE/TIME _____ DEPTH _____
WATER: DATE/TIME _____ DEPTH _____

APPENDIX D

BORING LOGS FOR WELLS INSTALLED BY GIRMES AND A PROSPECTIVE BUYER

SOIL BORING RECORD

ELEV. FEET	DEPTH FT.	MATERIAL	GROUP SYMBOL	NOTES	N
		Saprolite - Very Stiff Reddish Brown Micaceous SILT with Weathered Feldspar Lineations OVA=0	ML		26
	3.5				
	5				
		Saprolite - Very Stiff Reddish Brown Micaceous SILT with Weathered Feldspar Lineations OVA=0	ML		22
	8.5				
	10				
		Saprolite - Hard Reddish Brown Micaceous SILT with Weathered Feldspar Lineations OVA=7	ML		36
	13.5				
	15				
		Saprolite - Hard Reddish Brown Micaceous SILT with Weathered Feldspar Lineations OVA=10	ML		35
	18.5				
	20				
		Saprolite - Hard Light Brown to White Micaceous Sandy SILT with Abundant Weathered Feldspar OVA=18	ML		34
	23.5				
	25				
		Saprolite - Very Stiff Light Brown to White Micaceous Sandy SILT with Abundant Weathered Feldspar OVA=30	ML		24
	28.5				
	30				
		Saprolite - Very Stiff Light Brown to White Micaceous Sandy SILT with Abundant Weathered Feldspar OVA=34	ML		23
	33.5				
	35				
		Saprolite - Hard Light Brown to White Micaceous Sandy SILT with Abundant Weathered Feldspar OVA=8	ML		41
	38.5				
	40				
		Saprolite - Very Hard Brown Micaceous SILT with Biotite Fragments to 1/4" OVA=8	ML		56
	43.5				

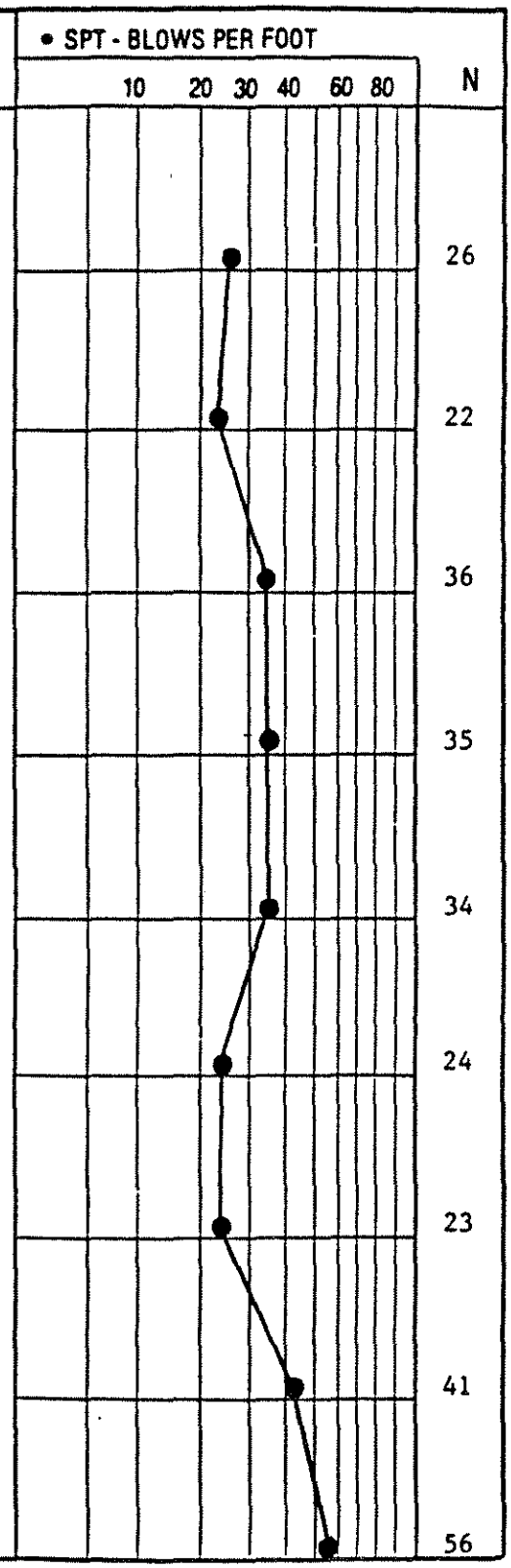

S&ME

BORING NO. MW1

DATE DRILLED 12/01/92

JOB NO. 1414-92-186

PAGE 1 of 2

SOIL BORING RECORD

ELEV. FEET	DEPTH FT.	MATERIAL	GROUP SYMBOL	NOTES	N
		Saprolite - Very Hard Dark Brown Micaceous Sandy SILT with Abundant Biotite OVA=82	ML		50/4"
	48.5				
	50				
		Saprolite - Hard Grayish Brown Micaceous Sandy SILT OVA=2	ML		32
	53.5				
	55				
		Saprolite - Very Hard Grayish Brown Micaceous Sandy SILT OVA=0	ML		50/5"
	58.5				
	60				
		Saprolite - Very Hard Grayish Brown Micaceous Sandy SILT OVA=0	ML		73
	63.5				
	65				
		Saprolite - Very Hard Grayish Brown Micaceous Sandy SILT OVA=0	ML		50/1"
	68.5				
	70				
	75				
	80				
	85				

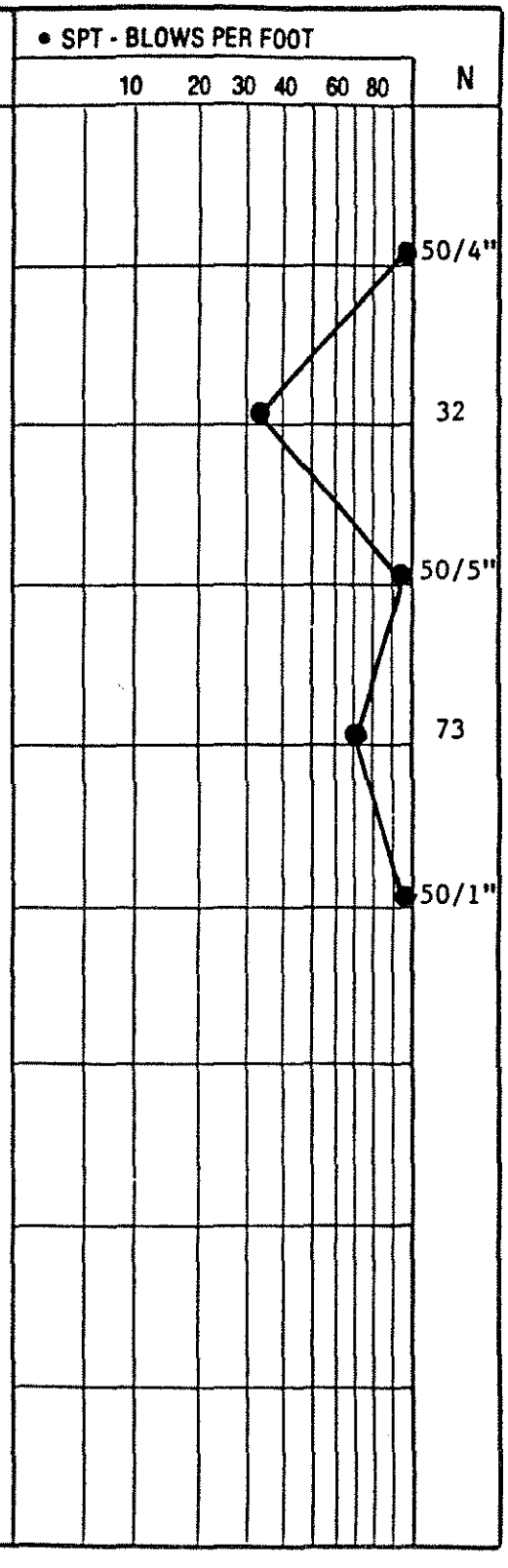

S&ME

BORING NO. MW1

DATE DRILLED 12/01/92

JOB NO. 1414-92-186

PAGE 2 of 2

ELEV. FEET	DEPTH FT.	MATERIAL	GROUP SYMBOL	NOTES	• SPT - BLOWS PER FOOT (10 20 30 40 60 80)	N
		Residuum - Very Stiff Light Reddish Brown Sandy Gravelly SILT OVA=0	ML			
	3.5					23
	5					
		Residuum - Hard Light Reddish Brown to Reddish Brown Micaceous SILT OVA=0	ML			
	8.5					31
	10					
		Residuum - Very Stiff Light Reddish Brown to Reddish Brown Micaceous SILT OVA=3	ML			
	13.5					20
	15					
		Saprolite - Very Hard Tan to Light Brown Slightly Clayey Micaceous SILT OVA=4	ML			
	18.5					57
	20					
		Saprolite - Very Stiff Tan to Dark Brown Clayey Sandy Micaceous SILT OVA=1	ML			
	23.5					23
	25					
		Saprolite - Hard Grayish Brown Sandy Gravelly Micaceous SILT OVA=1	ML			
	28.5					39
	30					
		Boring Terminated at 30 Ft. in Wet Soil				
	35					
	40					

S&ME

BORING NO. MW2

DATE DRILLED 12/07/92

JOB NO. 1414-92-186

PAGE 1 of 1

ELEV. FEET	DEPTH FT.	MATERIAL	GROUP SYMBOL	NOTES	• SPT - BLOWS PER FOOT (10 20 30 40 60 80)	N
	3.5	Fill - Very Soft Brownish Gray Clayey SILT OVA=700	ML			2
	5					
	8.5	No Recovery				50/5"
	10					
	13.5	Saprolite - Very Hard Brownish Gray Micaceous Fine Sandy SILT	ML			50/3"
	15					
	18.5	Saprolite - Very Hard Brownish Gray Micaceous Fine Sandy SILT	ML			50/2"
	20					
	23.5	Saprolite - Very Hard Brownish Gray Micaceous Fine Sandy SILT	ML			50/3"
	25					
	30	Boring Terminated at 25 Feet, at Auger Refusal NOTE: Insufficient Recovery for OVA Screening from 8.5 - 25.0 Feet				
	35					
	40					

S&ME

BORING NO. MW3

DATE DRILLED 12/04/92

JOB NO. 1414-92-186

PAGE 1 of 1

BAIN, PALMER & ASSOCIATES, INC.
Environmental Consultants

Client J.L. DE BALL GIRMES OF AMERICA, INC. Boring No. MW-4
Project GIRMES/ASHEVILLE Driller GROUNDWATER PROTECTION
Total Depth 82 FT. Elevation 98.72 Boring Type & Size 9 7/8" and 5 7/8" Air Hammer
Date Started 2-1-93 Date Ended 2-3-93 Logged By KEN VANHOY
Depth to Water 60.4 Date Measured 2-12-93 Water Level Elevation 38.34

DEPTH (FEET)	ELEVATION FT AMSL	BLOWS PER 6 IN.	PERCENT RECOVERY	UNIFIED CLASS.	LITHOLOGIC DESCRIPTION	REMARKS
				ML	1.5 ft of crusher run Brown, micaceous sandy silt with 25% rock fragments, fill?	OVA = 1.0 ppm
5				ML	Brown, micaceous sandy silt with 15-20% rock fragments, fill/saprolite?	OVA = 2.0
10				ML	Same as above	OVA = 1.5
15						
20				ML	Brown, micaceous sandy silt to 24 ft., saprolite Bedrock encountered at 24 ft.	
25				SM	Tan to gray sand with a little silt from 24-30 ft.	
30				SM	Brown, tan silty sand, bedrock	OVA = 1.0
35						
40				SM	Gray, tan sand, bedrock, very dusty	OVA = 0.8
45						
50						

BAIN, PALMER & ASSOCIATES, INC.
Environmental Consultants

Client J.L. DE BALL GIRMES OF AMERICA, INC. Boring No. MW-4
Project GIRMES/ASHEVILLE Driller GROUNDWATER PROTECTION
Total Depth 82 FT. Elevation 98.72 Boring Type & Size 9 7/8" and 5 7/8" Air Hammer
Date Started 2-1-93 Date Ended 2-3-93 Logged By KEN VANHOY
Depth to Water 60.4 Date Measured 2-12-93 Water Level Elevation 38.34

DEPTH (FEET)	ELEVATION FT AMSL	BLOWS PER 6 IN.	PERCENT RECOVERY	UNIFIED CLASS.	LITHOLOGIC DESCRIPTION	REMARKS
				SM	Tan, sand with a little silt, bedrock, non dusty	OVA = 0.4
55						
60				SM	Gray, tan, sand, bedrock, non dusty	OVA = 0.4
65						
70				SM	Gray, sand, bedrock, very dusty	OVA = 0.5
75						
80						
85					Note: Boring terminated at 82.0 ft. All samples taken from air hammer cuttings	
90						
95						
100						

BAIN, PALMER & ASSOCIATES, INC.
Environmental Consultants

Client J.L. DE BALL GIRMES OF AMERICA, INC. Boring No. MW-5
Project GIRMES/ASHEVILLE Driller GROUNDWATER PROTECTION
Total Depth 73 FT. Elevation 97.45 Boring Type & Size 9 7/8" and 5 7/8" Air Hammer
Date Started 2-2-93 Date Ended 2-3-93 Logged By KEN VANHOY
Depth to Water 62.82 Date Measured 2-12-93 Water Level Elevation 34.63

DEPTH (FEET)	ELEVATION FT AMSL	BLOWS PER 6 IN.	PERCENT RECOVERY	UNIFIED CLASS.	LITHOLOGIC DESCRIPTION	REMARKS
				ML	Brown, micaceous sandy silt	
5						
10						
15						
20						
25						
					Bedrock encountered at 28.0 ft.	
30				SM	Tan sand with a little mica and silt bedrock	OVA = 1.0 ppm
35				SM	Same as above	OVA = 1.0
40				SM	Same as above	OVA = 0.6
45						
50						

BAIN, PALMER & ASSOCIATES, INC.
Environmental Consultants

Client J.L. DE BALL GIRMES OF AMERICA, INC. Boring No. MW-5
Project GIRMES/ASHEVILLE Driller GROUNDWATER PROTECTION
Total Depth 73 FT. Elevation 97.45 Boring Type & Size 9 7/8" and 5 7/8" Air Hammer
Date Started 2-2-93 Date Ended 2-3-93 Logged By KEN VANHOY
Depth to Water 62.82 Date Measured 2-12-93 Water Level Elevation 34.63

DEPTH (FEET)	ELEVATION FT AMSL	BLOWS PER 6 IN.	PERCENT RECOVERY	UNIFIED CLASS.	LITHOLOGIC DESCRIPTION	REMARKS
				SM	Tan sand with a little mica and silt, bedrock	OVA = 0.5
55						
60				SM	Same as above	OVA = 0.3
65						
70				SM	Same as above	OVA = 0.9
75					Note: Boring terminated at 73.0 ft. All samples taken from air hammer cuttings	
80						
85						
90						
95						
100						

BAIN, PALMER & ASSOCIATES, INC.
Environmental Consultants

Client J.L. DE BALL GIRMES OF AMERICA, INC. Boring No. MW-6
Project GIRMES/ASHEVILLE Driller GROUNDWATER PROTECTION
Total Depth 50 FT. Elevation 75.97 Boring Type & Size 4¼ I.D. HSA
Date Started 2-8-93 Date Ended 2-9-93 Logged By KEN VANHOY
Depth to Water 40.7 Date Measured 2-12-93 Water Level Elevation 35.27

DEPTH (FEET)	ELEVATION FT AMSL	BLOWS PER 6 IN.	PERCENT RECOVERY	UNIFIED CLASS.	LITHOLOGIC DESCRIPTION	REMARKS
				ML	Brown, reddish-brown, silt with trace rock fragments, residual soil	OVA = 1.4 ppm
5				ML	Brown, silt with a little mica, residual soil/saprolite	OVA = 0.7
10				ML	Brown, silt with a little mica, saprolite	OVA = 0.8
15				ML	Same as above	OVA = 1.6
20				ML	Same as above	OVA = 1.2
25				ML	Same as above	OVA = 1.5
30				ML	Brown, silt with a little mica, trace schist rock fragments, saprolite	OVA = 1.5
35				ML	Same as above	OVA = 1.8
40				ML	Brown, silt with a little mica, trace schist rock fragments, saprolite, wet	OVA = 0.6
45				ML	Same as above	OVA = 1.4
50					Note: Boring terminated at 50.0 ft. All samples taken from drill cuttings	

BAIN, PALMER & ASSOCIATES, INC.
Environmental Consultants

Client J.L. DE BALL GIRMES OF AMERICA, INC. Boring No. MW-7
Project GIRMES/ASHEVILLE Driller GROUNDWATER PROTECTION
Total Depth 24.0 FT. Elevation 44.07 Boring Type & Size 4¼ I.D. HSA
Date Started 2-9-93 Date Ended 2-9-93 Logged By KEN VANHOY
Depth to Water 15.08 Date Measured 2-12-93 Water Level Elevation 28.99

DEPTH (FEET)	ELEVATION FT AMSL	BLOWS PER 6 IN.	PERCENT RECOVERY	UNIFIED CLASS.	LITHOLOGIC DESCRIPTION	REMARKS
				ML	Brown, silt, residual soil	OVA = 0.6
5				ML	Brown, micaceous silt, residual soil/saprolite	OVA = 0.4
10				ML	Brown, micaceous silt, residual soil/saprolite, very damp	OVA = 0.8
15				ML	Same as above	OVA = 0.3
20				ML	Same as above	OVA = 0.3
25					Note: Boring terminated at 24.0 ft. All samples taken from drill cuttings	
30						
35						
40						
45						
50						

BAIN, PALMER & ASSOCIATES, INC.
Environmental Consultants

Client J.L. DE BALL GIRMES OF AMERICA, INC. Boring No. MW-8
Project GIRMES/ASHEVILLE Driller GROUNDWATER PROTECTION
Total Depth 28 FT. Elevation 49.48 Boring Type & Size 4¼ I.D. HSA
Date Started 2-11-93 Date Ended 2-11-93 Logged By KEN VANHOY
Depth to Water 20.85 Date Measured 2-12-93 Water Level Elevation 28.63

DEPTH (FEET)	ELEVATION FT AMSL	BLOWS PER 6 IN.	PERCENT RECOVERY	UNIFIED CLASS.	LITHOLOGIC DESCRIPTION	REMARKS
				CL/ ML	Tan, sandy, silty clay, residual soil, damp	OVA = 1.2 ppm
5				ML	Tan, micaceous silt, with a little clay and sand, saprolite	OVA = 0.8
10				ML	Same as above	OVA = 1.0
15				ML	Tan, gray, micaceous silt with a little clay and sand, saprolite	OVA = 1.1
20				ML	Same as above	OVA = 0.8
25				ML/ CL	Tan, gray, micaceous clayey silt with a little sand, saprolite, wet	OVA = 0.4
30					Note: Boring terminated at 28.0 ft. All samples taken from drill cuttings	
35						
40						
45						
50						

BAIN, PALMER & ASSOCIATES, INC.
Environmental Consultants

Client J.L. DE BALL GIRMES OF AMERICA, INC. Boring No. MW-9
Project GIRMES/ASHEVILLE Driller GROUNDWATER PROTECTION
Total Depth 37 FT. Elevation 45.81 Boring Type & Size 4¼ I.D. HSA
Date Started 2-11-93 Date Ended 2-11-93 Logged By KEN VANHOY
Depth to Water 18.08 Date Measured 2-12-93 Water Level Elevation 27.73

DEPTH (FEET)	ELEVATION FT AMSL	BLOWS PER 6 IN.	PERCENT RECOVERY	UNIFIED CLASS.	LITHOLOGIC DESCRIPTION	REMARKS
				ML	Brown, clayey sandy silt with a trace of rock fragments, residual soil, damp	OVA = 1.4 ppm
5				ML	Tan, micaceous silt, residual soil/saprolite, damp	OVA = 0.6
10				ML	Tan, sandy silt with a trace of gravel (¼" - ½"), residual soil/ saprolite	OVA = 0.5
15				ML	Tan, sandy silt with 25% gravel, saprolite	OVA = 0.5
20				ML	Same as above	OVA = 0.4
25				ML	Brown, tan, micaceous sandy silt, saprolite	OVA = 0.2
30				ML	Brown, sandy silt, saprolite	OVA = 0.2
35				ML	Brown, micaceous clayey silt, wet	OVA = 0.1
40					Note: Boring terminated at 37.0 ft. All samples taken from drill cuttings	
45						
50						

BAIN, PALMER & ASSOCIATES, INC.
Environmental Consultants

Client J.L. DE BALL GIRMES OF AMERICA, INC. Boring No. MW-10
Project GIRMES/ASHEVILLE Driller GROUNDWATER PROTECTION
Total Depth 30 FT. Elevation 49.97 Boring Type & Size 4¼ I.D. HSA
Date Started 2-11-93 Date Ended 2-11-93 Logged By KEN VANHOY
Depth to Water 20.19 Date Measured 2-12-93 Water Level Elevation 29.78

DEPTH (FEET)	ELEVATION FT AMSL	BLOWS PER 6 IN.	PERCENT RECOVERY	UNIFIED CLASS.	LITHOLOGIC DESCRIPTION	REMARKS
				ML	Brown, tan, micaceous silt, residual soil, damp	OVA = 1.5 ppm
5				ML	Tan, sandy, micaceous silt, with a little gravel/rock fragments, residual soil/saprolite	OVA = 1.0
10				SM	Tan, micaceous silty sand, saprolite	OVA = 2.5
15				SM	Tan, micaceous silty sand with trace rock fragments, saprolite	OVA = 0.6
20				ML	Brown, sandy silt with trace rock fragments, saprolite	OVA = 0.5
25				ML	Same as above	OVA = 0.4
30					Note: Auger refusal at 30.0 ft. All samples taken from drill cuttings	
35						
40						
45						
50						

APPENDIX E

PIEZOCONE SOUNDING AND HYDROCONE® TEST DATA

IN-SITU TECHNOLOGY SOIL BEHAVIOR TABLE

JOB NAME 70144.01
R.M.T. INC
ASHEVILLE NC
FILE NAME..... PC-1

DEPTH FEET	SOIL BEHAVIOR TYPE	QC (KG/CM2)	LF (KG/CM2)	N VALUES #	N'	VERTICAL EFFECTIVE STRESS (KG/CM2)	RELATIVE DENSITY (%) *	FRICTION ANGLE (DEGREES) **	YOUNGS MODULUS (KG/CM2) ***	UNDRAINED SHEAR STRENGTH (KG/CM2) ****	SENSITIVITY	COMP.	OC
1	SILTY TO CLAYEY F.S.	65.3	1.16	21	18	.048	70%-80%	)48	143	—	—	—	—
2	SILTY TO CLAYEY F.S.	50.2	.86	16	14	.097	60%-70%	46-48	110	—	—	—	—
3	SILTY TO CLAYEY F.S.	76.3	1.01	25	19	.146	70%-80%	46-48	167	—	—	—	—
4	SILTY FINE SAND	122.9	1.52	30	31	.195	)90%	)48	270	—	—	—	—
5	SILTY TO CLAYEY F.S.	79	1.55	26	22	.244	70%-80%	46-48	173	—	—	—	—
6	SANDY CLAY	29	.89	14	9	.288	—	—	—	1.82	3.2	.01	)6
7	SILTY CLAY	22.4	.89	14	8	.332	—	—	—	1.4	2.4	UD	)6
8	SILTY TO CLAYEY F.S.	62.5	1.26	20	18	.38	60%-70%	42-44	137	—	—	—	—
9	SILTY FINE SAND	134.7	2.22	33	36	.429	80%-90%	44-46	296	—	—	—	—
10	SILTY FINE SAND	180.6	2.55	45	46	.478	)90%	46-48	397	—	—	—	—
11	SILTY FINE SAND	172.1	2.09	43	43	.527	80%-90%	46-48	378	—	—	—	—
12	SILTY FINE SAND	134.9	1.48	33	33	.576	70%-80%	44-46	296	—	—	—	—
13	SILTY FINE SAND	144.3	1.96	36	37	.625	80%-90%	44-46	317	—	—	—	—
14	SILTY FINE SAND	133.4	1.85	33	34	.673	70%-80%	42-44	293	—	—	—	—
15	SILTY TO CLAYEY F.S.	103	1.76	34	28	.722	60%-70%	42-44	226	—	—	—	—
16	FINE SAND	163.9	1.38	32	38	.776	80%-90%	44-46	360	—	—	—	—
17	SILTY FINE SAND	134	2.01	33	35	.825	70%-80%	42-44	294	—	—	—	—
18	FINE SAND	238.2	1.77	47	55	.879	)90%	44-46	524	—	—	—	—
19	SILTY FINE SAND	259.3	4.21	64	69	.927	)90%	44-46	570	—	—	—	—
20	SILTY TO CLAYEY F.S.	119.8	2.58	39	34	.976	60%-70%	40-42	263	—	—	—	—
21	SILTY TO CLAYEY F.S.	134.9	2.96	44	39	1.007	70%-80%	42-44	296	—	—	—	—
22	SILTY TO CLAYEY F.S.	126	2.18	42	34	1.038	60%-70%	40-42	277	—	—	—	—

\# N'=POINT STRESS*(.2+.04*FRICTION RATIO)

* NORMALLY CONSOLIDATED SANDS

** FOR OVERCONSOLIDATED SANDS, SLIGHTLY REDUCE ABOVE FRICTION ANGLES

*** FOR OVERCONSOLIDATED SANDS, YOUNG'S MODULUS MAY BE AS MUCH AS 3 TO 6 TIMES HIGHER

**** NK OF 16 USED. FOR OVERCONSOLIDATED CLAYS, AN NK OF 17 IS SUGGESTED

THE ABOVE DATA WAS COMPUTED FOLLOWING 'BASIC' GUIDELINES BY P. K. ROBERTSON AND R. G. CAMPANELLA IN THE HANDBOOK 'GUIDELINES FOR USE AND INTERPERTATION OF THE ELECTRONIC CONE PENETRATION TEST' SEPTEMBER, 1984

ADDITIONAL LOCAL CORRELATIONS DEVELOPED BY IN-SITU TECHNOLOGY HAVE ALSO BEEN USED IN COMPUTING THE ABOVE DATA. IT IS THE POLICY OF IN-SITU TECHNOLOGY TO CONTINUALLY UPGRADE AND MODIFY C.P.T CORRELATIONS AS PUBLISHED RESEARCH AND LOCAL EXPERIENCE GROWS.

PIEZOCONE SOUNDING TEST

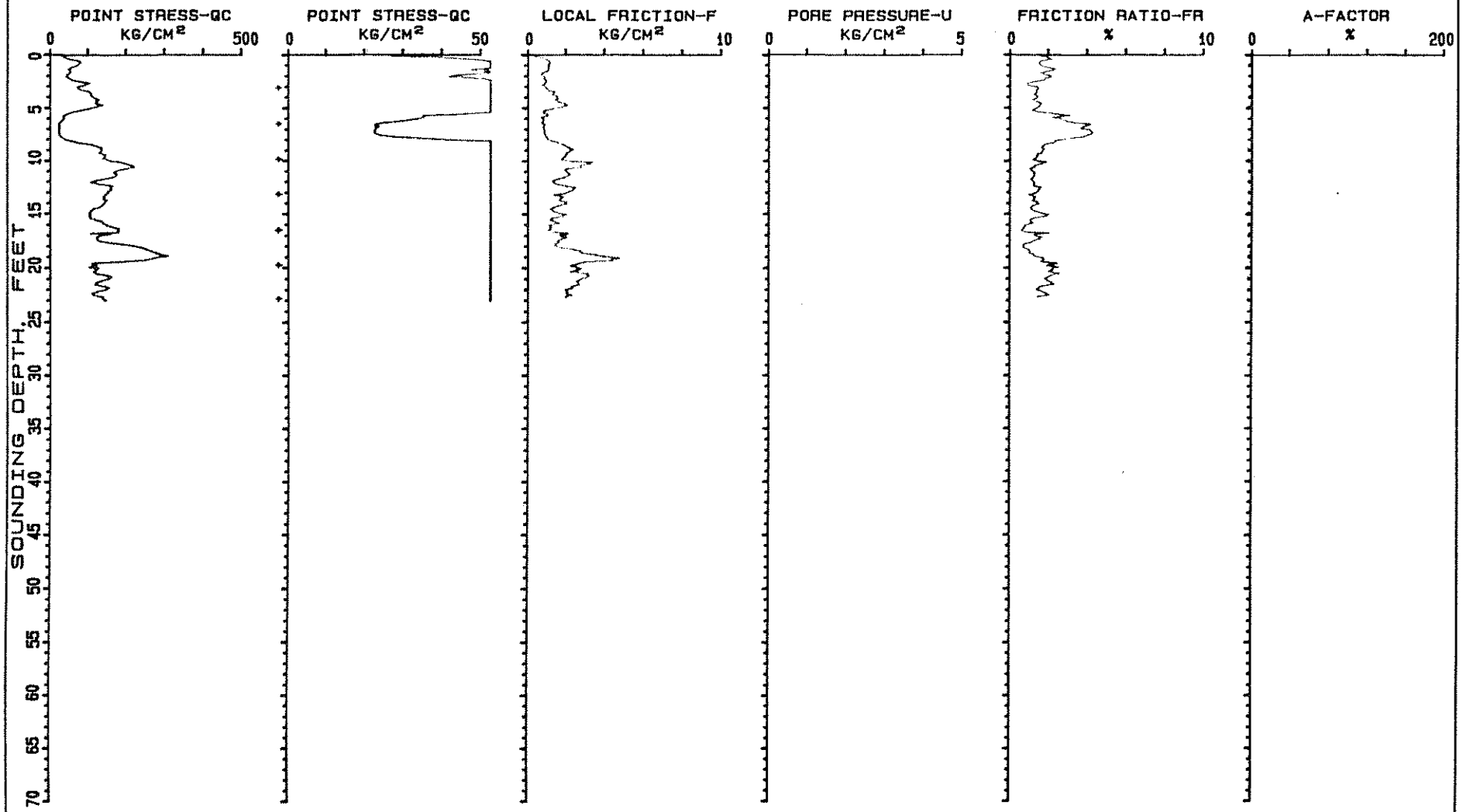

* PUSH INTERRUPTED TO ADD ROD
PORE PRESSURE DECAY DATA MAY BE AVAILABLE

FILE #..... 70144.01
R.M.T. INC
ASHEVILLE NC
SOUNDING # PC-1
SOUNDING DATE 08/16/93 13: 02: 10

IN-SITU TECHNOLOGY SOIL BEHAVIOR TABLE

JOB NAME 70144.01
R.M.T. INC
ASHEVILLE NC
FILE NAME..... PC-2

DEPTH FEET	SOIL BEHAVIOR TYPE	QC (KG/CM2)	LF (KG/CM2)	N VALUES #	N'	VERTICAL EFFECTIVE STRESS (KG/CM2)	RELATIVE DENSITY (%) *	FRICTION ANGLE (DEGREES) **	YOUNGS MODULUS (KG/CM2) ***	UNDRAINED SHEAR STRENGTH (KG/CM2) ****	SENSITIVITY	COMP.	OC
1	CLAY	37.4	1.88	37	15	.039	—	—	—	2.33	1.9	UD	>6
2	SILTY CLAY	19	.74	12	7	.083	—	—	—	1.18	2.5	.01	>6
3	SILTY CLAY	11.7	.37	7	4	.11	—	—	—	.72	3.1	.02	>6
4	CLAY	7.5	.37	7	3	.135	—	—	—	.45	1.9	.03	6
5	CLAY	3.9	.19	3	2	.16	—	—	—	.22	2	.06	6
6	SOFT CLAY	1.4	.21	1	1	.176	—	—	—	.06	.6	UD	1-1.
7	SOFT CLAY	1.5	.08	1	1	.192	—	—	—	.07	1.7	UD	1-1.
8	SOFT CLAY	.5	.11	0	0	.208	—	—	—	0	.5	UD	<1
9	SOFT CLAY	1.3	.1	1	1	.224	—	—	—	.05	1.2	UD	1
10	CLAYEY FINE SAND	16.2	.26	6	4	.255	<40%	38-40	35	—	—	—	—
11	SOFT CLAY	.4	.18	0	1	.271	—	—	—	-.01	.2	UD	<1
12	SILTY CLAY	9.6	.26	6	3	.298	—	—	—	.56	3.5	.02	6
13	SILTY CLAY	16.1	.64	10	6	.326	—	—	—	.96	2.4	.01	6
14	SILTY TO CLAYEY F.S.	46.6	.86	15	13	.356	50%-60%	42-44	102	—	—	—	—
15	SILTY FINE SAND	76.9	.91	19	19	.387	70%-80%	42-44	169	—	—	—	—
16	FINE SAND	189.7	1.6	37	44	.42	>90%	46-48	417	—	—	—	—
17	FINE SAND	164.4	1.76	32	40	.454	>90%	46-48	361	—	—	—	—
18	SILTY TO CLAYEY F.S.	96.3	1.6	32	26	.484	70%-80%	42-44	211	—	—	—	—
19	FINE SAND	148.9	1.53	29	36	.518	80%-90%	44-46	327	—	—	—	—
20	CLAY	24.2	1.2	24	10	.543	—	—	—	1.44	2	UD	6
21	SILTY CLAY	29.4	1.31	19	11	.57	—	—	—	1.76	2.2	UD	6
22	SILTY CLAY	25.7	1.07	17	9	.597	—	—	—	1.53	2.4	UD	6
23	SILTY CLAY	32.8	1.45	21	12	.625	—	—	—	1.97	2.2	UD	6
24	CLAYEY FINE SAND	50.8	1.3	20	15	.655	40%-50%	38-40	111	—	—	—	—

\# N'=POINT STRESS*(.2+.04*FRICTION RATIO)

* NORMALLY CONSOLIDATED SANDS

** FOR OVERCONSOLIDATED SANDS,SLIGHTLY REDUCE ABOVE FRICTION ANGLES

*** FOR OVERCONSOLIDATED SANDS, YOUNG'S MODULUS MAY BE AS MUCH AS 3 TO 6 TIMES HIGHER

**** NK OF 16 USED. FOR OVERCONSOLIDATED CLAYS, AN NK OF 17 IS SUGGESTED

THE ABOVE DATA WAS COMPUTED FOLLOWING 'BASIC' GUIDELINES BY P. K. ROBERTSON AND R. G. CAMPANELLA IN THE HANDBOOK 'GUIDELINES FOR USE AND INTERPERTATION OF THE ELECTRONIC CONE PENETRATION TEST' SEPTEMBER,1984

ADDITIONAL LOCAL CORRELATIONS DEVELOPED BY IN-SITU TECHNOLOGY HAVE ALSO BEEN USED IN COMPUTING THE ABOVE DATA. IT IS THE POLICY OF IN-SITU TECHNOLOGY TO CONTINUALLY UPGRADE AND MODIFY C.P.T CORRELATIONS AS PUBLISHED RESEARCH AND LOCAL EXPERIENCE GROWS.

PIEZOCONE SOUNDING TEST

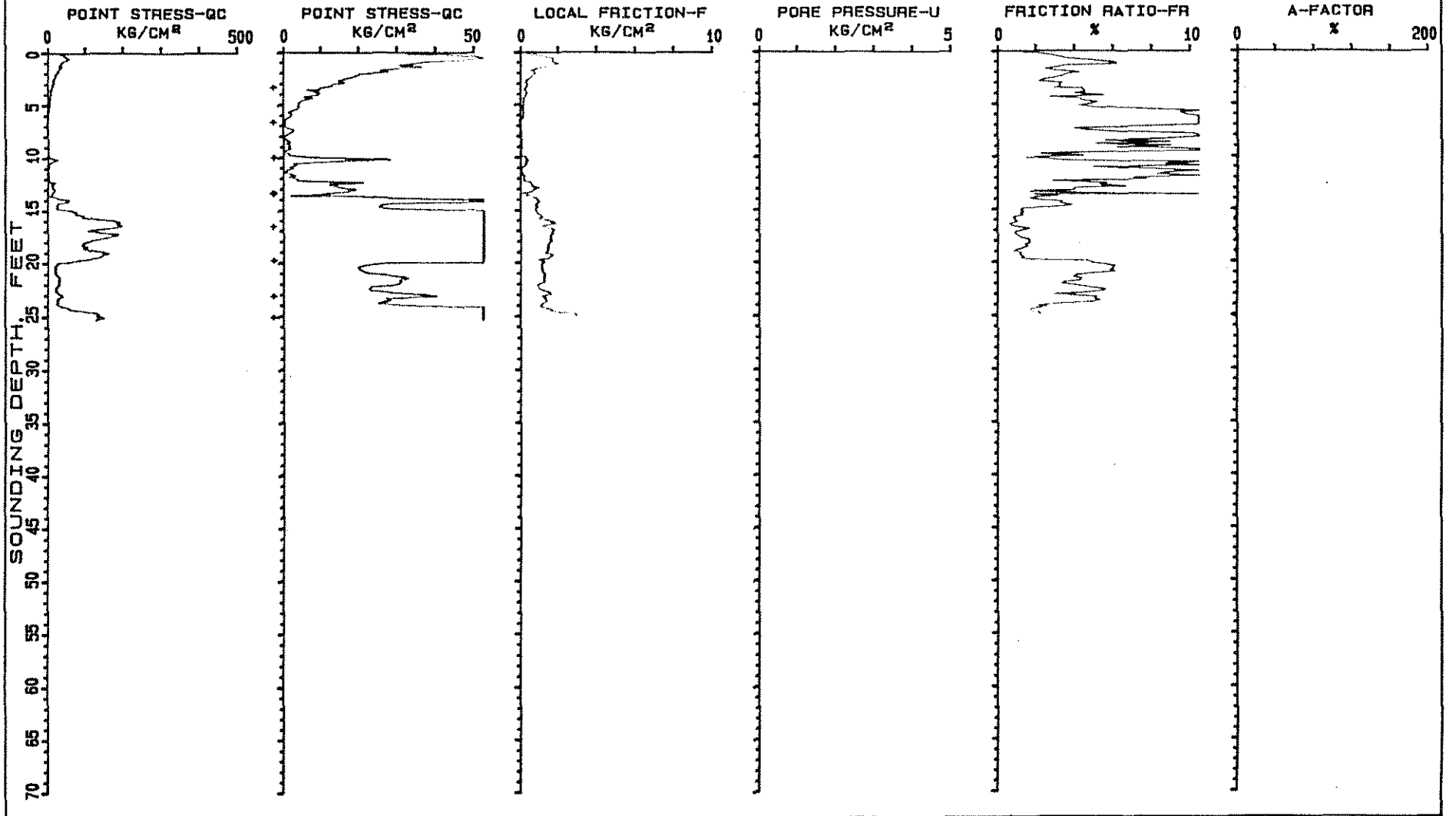

+ PUSH INTERRUPTED TO ADD ROD
PORE PRESSURE DECAY DATA MAY BE AVAILABLE

FILE #..... 70144.01
R.M.T. INC
ASHEVILLE NC
SOUNDING # PC-2
SOUNDING DATE 08/16/93 15: 30: 18

IN-SITU TECHNOLOGY SOIL BEHAVIOR TABLE

JOB NAME 70144.01
R.M.T. INC
ASHEVILLE NC
FILE NAME..... PC-3

DEPTH FEET	SOIL BEHAVIOR TYPE	QC (KG/CM2)	LF (KG/CM2)	N VALUES #	N'	VERTICAL EFFECTIVE STRESS (KG/CM2)	RELATIVE DENSITY (%) *	FRICTION ANGLE (DEGREES) **	YOUNGS MODULUS (KG/CM2) ***	UNDRAINED SHEAR STRENGTH (KG/CM2) ****	SENSITIVITY	COMP.	OC
1	SANDY CLAY	45.7	1.63	22	16	.043	—	—	—	2.88	2.7	.01	>6
2	CLAY	37.6	2.13	37	16	.083	—	—	—	2.37	1.7	UD	>6
3	CLAY	13.3	.82	13	6	.122	—	—	—	.85	1.6	.01	>6
4	CLAY	10.1	.54	10	4	.161	—	—	—	.65	1.8	.02	>6
5	CLAY	10.4	.41	10	4	.2	—	—	—	.66	2.5	.02	6
6	SANDY CLAY	12.2	.23	6	3	.244	—	—	—	.77	5.1	.02	6
7	SILTY FINE SAND	70.2	.26	17	15	.293	70%-80%	44-46	154	—	—	—	—
8	SILTY FINE SAND	73.8	.3	18	16	.341	70%-80%	44-46	162	—	—	—	—
9	SILTY TO CLAYEY F.S.	38.2	.58	12	10	.39	50%-60%	40-42	84	—	—	—	—
10	CLAYEY FINE SAND	63.5	1.54	25	19	.439	60%-70%	42-44	139	—	—	—	—
11	CLAYEY FINE SAND	43	.85	17	12	.488	50%-60%	40-42	94	—	—	—	—
12	CLAYEY FINE SAND	35.2	.89	14	11	.537	<40%	38-40	77	—	—	—	—
13	SANDY CLAY	24.7	.78	12	8	.581	—	—	—	1.52	3.1	.02	6
14	SANDY CLAY	24.1	.84	12	8	.625	—	—	—	1.47	2.8	.02	6
15	CLAYEY FINE SAND	45.2	.89	18	13	.673	40%-50%	38-40	99	—	—	—	—
16	CLAYEY FINE SAND	43.6	1.03	17	13	.722	<40%	38-40	95	—	—	—	—
17	CLAYEY FINE SAND	41.2	1.27	16	13	.771	<40%	36-38	90	—	—	—	—
18	CLAYEY FINE SAND	32.7	.5	13	9	.82	<40%	36-38	71	—	—	—	—
19	SANDY CLAY	25.8	.97	12	9	.864	—	—	—	1.56	2.6	.02	6
20	CLAYEY FINE SAND	72.6	2.3	29	24	.913	50%-60%	38-40	159	—	—	—	—
21	SILTY CLAY	52.1	2.17	34	19	.94	—	—	—	3.19	2.3	UD	6
22	CLAY	22.4	1.26	22	10	.965	—	—	—	1.33	1.7	UD	6
23	SANDY CLAY	66	2.58	33	24	.992	—	—	—	4.05	2.5	0	>6
24	SILTY FINE SAND	119.6	1.8	29	31	1.023	60%-70%	40-42	263	—	—	—	—
25	SILTY TO CLAYEY F.S.	112.1	2.7	37	33	1.054	60%-70%	40-42	246	—	—	—	—

) N'=POINT STRESS*(.2+.04*FRICTION RATIO)

* NORMALLY CONSOLIDATED SANDS

** FOR OVERCONSOLIDATED SANDS, SLIGHTLY REDUCE ABOVE FRICTION ANGLES

*** FOR OVERCONSOLIDATED SANDS, YOUNG'S MODULUS MAY BE AS MUCH AS 3 TO 6 TIMES HIGHER

**** NK OF 16 USED. FOR OVERCONSOLIDATED CLAYS, AN NK OF 17 IS SUGGESTED

THE ABOVE DATA WAS COMPUTED FOLLOWING 'BASIC' GUIDELINES BY P. K. ROBERTSON AND R. G. CAMPANELLA IN THE HANDBOOK 'GUIDELINES FOR USE AND INTERPERTATION OF THE ELECTRONIC CONE PENETRATION TEST' SEPTEMBER, 1984

ADDITIONAL LOCAL CORRELATIONS DEVELOPED BY IN-SITU TECHNOLOGY HAVE ALSO BEEN USED IN COMPUTING THE ABOVE DATA. IT IS THE POLICY OF IN-SITU TECHNOLOGY TO CONTINUALLY UPGRADE AND MODIFY C.P.T CORRELATIONS AS PUBLISHED RESEARCH AND LOCAL EXPERIENCE GROWS.

PIEZOCONE SOUNDING TEST

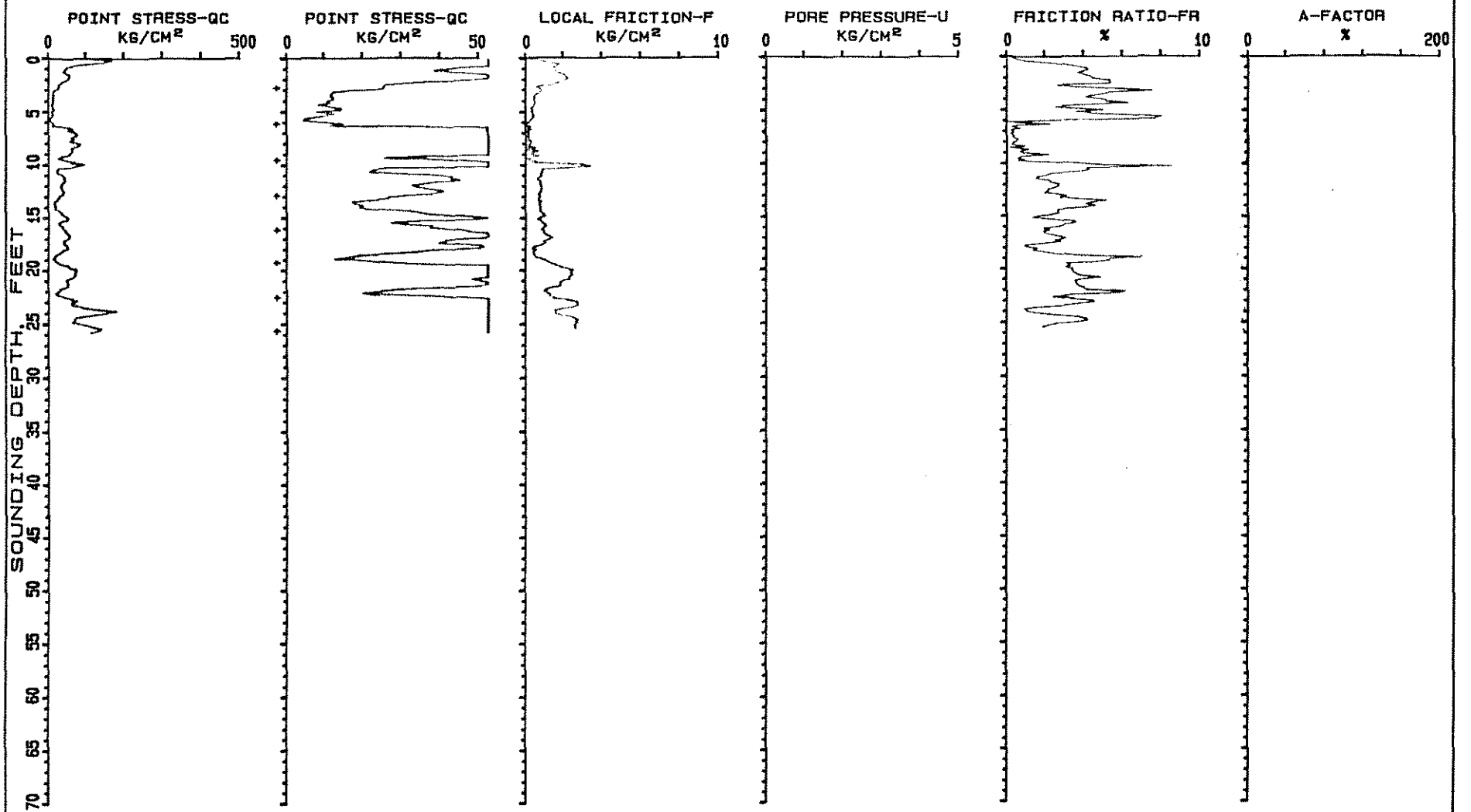

* PUSH INTERRUPTED TO ADD ROD
PORE PRESSURE DECAY DATA MAY BE AVAILABLE

FILE #..... 70144.01
R.M.T. INC
ASHEVILLE NC
SOUNDING # PC-3
SOUNDING DATE 08/17/93 10: 12: 07

IN-SITU TECHNOLOGY SOIL BEHAVIOR TABLE

JOB NAME 70144.01
R.M.T. INC
ASHEVILLE NC
FILE NAME..... PC-4

DEPTH FEET	SOIL BEHAVIOR TYPE	QC (KG/CM2)	LF (KG/CM2)	N VALUES	N'	VERTICAL EFFECTIVE STRESS (KG/CM2)	RELATIVE DENSITY (%)	FRICTION ANGLE (DEGREES)	YOUNGS MODULUS (KG/CM2)	UNDRAINED SHEAR STRENGTH (KG/CM2)	SENSITIVITY	COMP.	OI
				#			*	**	***	****			
1	SILTY FINE SAND	132.7	2.08	33	35	.048	)90%	)48	291	—	—	—	—
2	SILTY CLAY	28.8	1.33	19	11	.092	—	—	—	1.8	2.1	UD	)6
3	CLAYEY FINE SAND	47	1.62	18	16	.141	60%-70%	46-48	103	—	—	—	—
4	SILTY TO CLAYEY F.S.	103.8	1.93	34	29	.19	80%-90%	)48	228	—	—	—	—
5	SILTY TO CLAYEY F.S.	140.8	2.79	46	39	.239	)90%	)48	309	—	—	—	—
6	SILTY TO CLAYEY F.S.	106.9	2.15	35	30	.288	70%-80%	46-48	235	—	—	—	—
7	SILTY FINE SAND	111.2	1.46	27	28	.336	70%-80%	46-48	244	—	—	—	—
8	SILTY TO CLAYEY F.S.	114.1	2.11	38	31	.385	70%-80%	44-46	251	—	—	—	—
[illegible]	SILTY FINE SAND	233	3.21	58	59	.434	)90%	)48	512	—	—	—	—
10	SILTY FINE SAND	253.1	3.94	63	66	.483	)90%	46-48	556	—	—	—	—

\# N'=POINT STRESS*(.2+.04*FRICTION RATIO)
* NORMALLY CONSOLIDATED SANDS
** FOR OVERCONSOLIDATED SANDS, SLIGHTLY REDUCE ABOVE FRICTION ANGLES
*** FOR OVERCONSOLIDATED SANDS, YOUNG'S MODULUS MAY BE AS MUCH AS 3 TO 6 TIMES HIGHER
**** NK OF 16 USED. FOR OVERCONSOLIDATED CLAYS, AN NK OF 17 IS SUGGESTED

THE ABOVE DATA WAS COMPUTED FOLLOWING 'BASIC' GUIDELINES BY P. K. ROBERTSON AND R. G. CAMPANELLA IN THE HANDBOOK 'GUIDELINES FOR USE AND INTERPERTATION OF THE ELECTRONIC CONE PENETRATION TEST' SEPTEMBER, 1984

ADDITIONAL LOCAL CORRELATIONS DEVELOPED BY IN-SITU TECHNOLOGY HAVE ALSO BEEN USED IN COMPUTING THE ABOVE DATA. IT IS THE POLICY OF IN-SITU TECHNOLOGY TO CONTINUALLY UPGRADE AND MODIFY C.P.T CORRELATIONS AS PUBLISHED RESEARCH AND LOCAL EXPERIENCE GROWS.

PIEZOCONE SOUNDING TEST

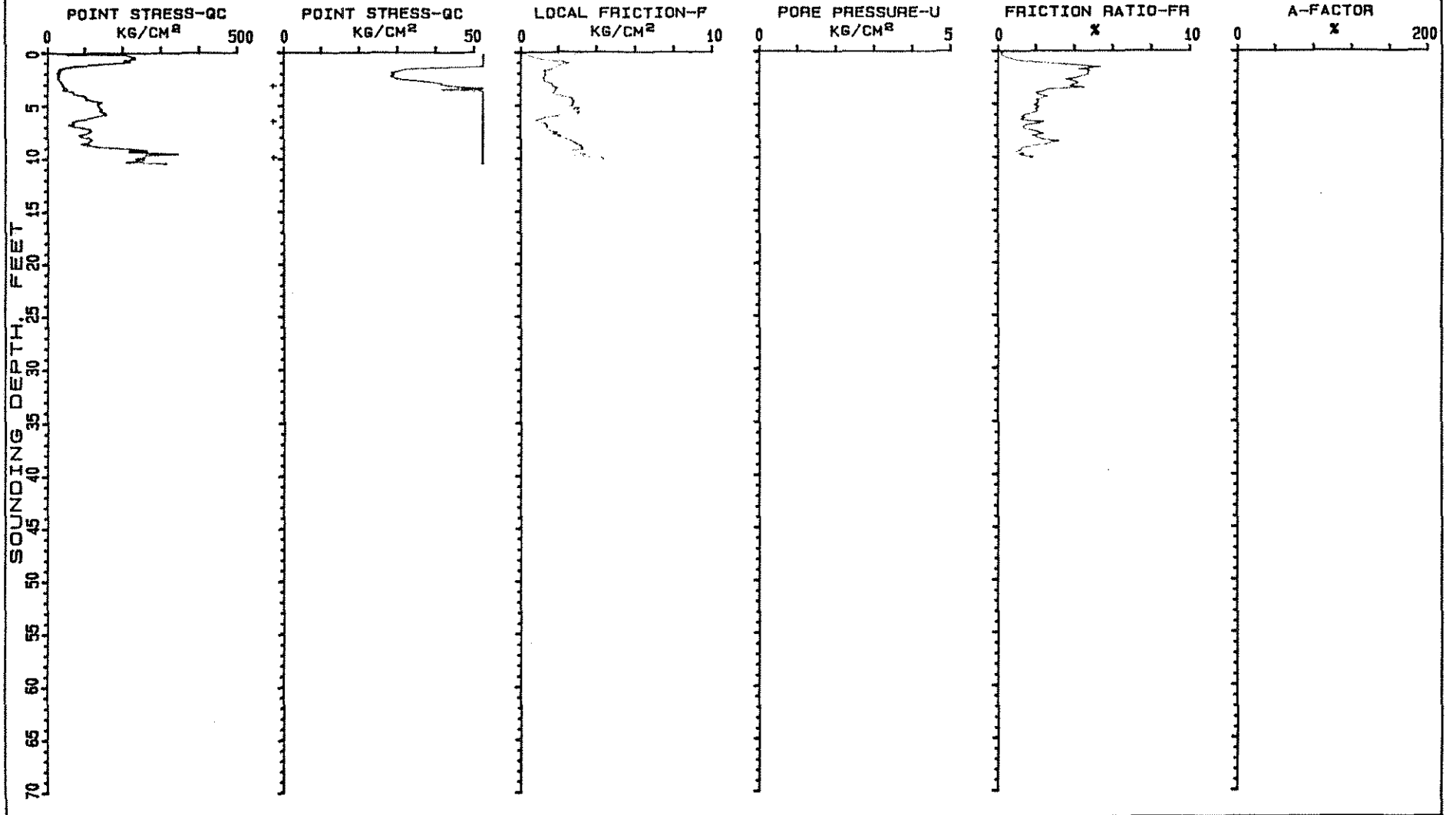

+ PUSH INTERRUPTED TO ADD ROD
PORE PRESSURE DECAY DATA MAY BE AVAILABLE

FILE #..... 70144.01
R.M.T. INC
ASHEVILLE NC
SOUNDING # PC-4
SOUNDING DATE 08/17/93 15:21:50

IN-SITU TECHNOLOGY SOIL BEHAVIOR TABLE

JOB NAME 70144.01
R.M.T. INC
ASHEVILLE NC
FILE NAME..... PC-5

DEPTH FEET	SOIL BEHAVIOR TYPE	QC (KG/CM2)	LF (KG/CM2)	N VALUES #	N'	VERTICAL EFFECTIVE STRESS (KG/CM2)	RELATIVE DENSITY (%) *	FRICTION ANGLE (DEGREES) **	YOUNGS MODULUS (KG/CM2) ***	UNDRAINED SHEAR STRENGTH (KG/CM2) ****	SENSITIVITY	COMP.	OCI
1	SILTY TO CLAYEY F.S.	79	1.63	26	22	.048	70%-80%	)48	173	—	—	—	—
2	CLAY	38.3	2.56	38	18	.087	—	—	—	2.42	1.4	UD	)6
3	CLAY	23.2	2.11	23	13	.126	—	—	—	1.47	1	UD	)6
4	SILTY CLAY	36.6	1.72	24	14	.17	—	—	—	2.3	2.1	UD	)6
5	SOFT CLAY	12.5	1.38	12	8	.202	—	—	—	.79	.9	UD	6
6	CLAY	17.1	1.19	17	8	.241	—	—	—	1.08	1.4	.01	)6
7	CLAY	14.7	.94	14	7	.28	—	—	—	.92	1.5	.01	6
8	CLAYEY FINE SAND	37.6	1.2	15	12	.329	50%-60%	40-42	82	—	—	—	—
9	CLAY	21.4	1.94	21	12	.368	—	—	—	1.33	1.1	UD	6
10	CLAY	14.5	1.4	14	8	.407	—	—	—	.89	1	.01	6
11	CLAY	14.5	1.3	14	8	.446	—	—	—	.89	1.1	.01	6
12	CLAY	5.8	.37	5	3	.485	—	—	—	.34	1.5	.04	3
13	SANDY CLAY	10.2	.25	5	3	.529	—	—	—	.61	4	.02	6
14	SANDY CLAY	8.2	.13	4	2	.573	—	—	—	.48	6.1	.03	3
15	CLAYEY FINE SAND	16.7	.23	6	4	.622	(40%	32-34	36	—	—	—	—
16	SOFT CLAY	3.8	1.2	3	5	.654	—	—	—	.2	.3	UD	1-1.
17	SOFT CLAY	4.1	.72	4	4	.686	—	—	—	.21	.5	UD	1-1.
18	CLAY	5.3	.42	5	3	.725	—	—	—	.28	1.2	.04	1-1.
19	SOFT CLAY	2.5	.17	2	1	.756	—	—	—	.11	1.4	UD	1
20	SENSITIVE FINE GRAINED	7.2	.01	3	2	.791	—	—	—	.4	39	.02	3
21	SILTY CLAY	6.8	.13	4	2	.818	—	—	—	.37	5	.03	1-1.
22	CLAY	14	.88	14	6	.843	—	—	—	.81	1.5	.01	3
23	CLAY	9.2	.61	9	4	.868	—	—	—	.51	1.5	.02	3
24	VERY STIFF FINE GRAINED	205.3	12.33	205	90	.899	—	—	—	12.76	1.6	UD	)6
25	SOFT CLAY	33.4	6.58	33	33	.915	—	—	—	2.02	.5	UD	6
26	CLAY	67.6	4.53	67	32	.94	—	—	—	4.15	1.4	UD	)6
27	CLAY	90.7	7.69	90	49	.964	—	—	—	5.59	1.1	UD	)6
28	SAND TO CLAYEY FINE SAND	232.9	8.78	116	82	.998	)90%	44-46	512	—	—	—	—
29	VERY STIFF FINE GRAINED	235.6	10.03	235	87	1.028	—	—	—	14.64	2.3	UD	)6
30	SAND TO CLAYEY FINE SAND	227.5	8.94	113	81	1.062	80%-90%	44-46	500	—	—	—	—

PC-5 CONTINUED

31	CLAYEY FINE SAND	135.6	4.18	54	44	1.092	60%-70%	40-42	298	—	—	—	—
32	CLAY	98.2	6.82	98	47	1.117	—	—	—	6.04	1.4	UD	>6
33	VERY STIFF FINE GRAINED	107.5	4.68	107	40	1.148	—	—	—	6.62	2.2	UD	>6
34	CLAY	62.4	7.47	62	42	1.173	—	—	—	3.79	.8	UD	6
35	VERY STIFF FINE GRAINED	104.5	6.23	104	46	1.204	—	—	—	6.42	1.6	UD	>6

\# N'=POINT STRESS*(.2+.04*FRICTION RATIO)

* NORMALLY CONSOLIDATED SANDS

** FOR OVERCONSOLIDATED SANDS, SLIGHTLY REDUCE ABOVE FRICTION ANGLES

*** FOR OVERCONSOLIDATED SANDS, YOUNG'S MODULUS MAY BE AS MUCH AS 3 TO 6 TIMES HIGHER

**** NK OF 16 USED. FOR OVERCONSOLIDATED CLAYS, AN NK OF 17 IS SUGGESTED

THE ABOVE DATA WAS COMPUTED FOLLOWING 'BASIC' GUIDELINES BY P. K. ROBERTSON AND R. G. CAMPANELLA IN THE HANDBOOK 'GUIDELINES FOR USE AND INTERPERTATION OF THE ELECTRONIC CONE PENETRATION TEST' SEPTEMBER, 1984

ADDITIONAL LOCAL CORRELATIONS DEVELOPED BY IN-SITU TECHNOLOGY HAVE ALSO BEEN USED IN COMPUTING THE ABOVE DATA. IT IS THE POLICY OF IN-SITU TECHNOLOGY TO CONTINUALLY UPGRADE AND MODIFY C.P.T CORRELATIONS AS PUBLISHED RESEARCH AND LOCAL EXPERIENCE GROWS.

PIEZOCONE SOUNDING TEST

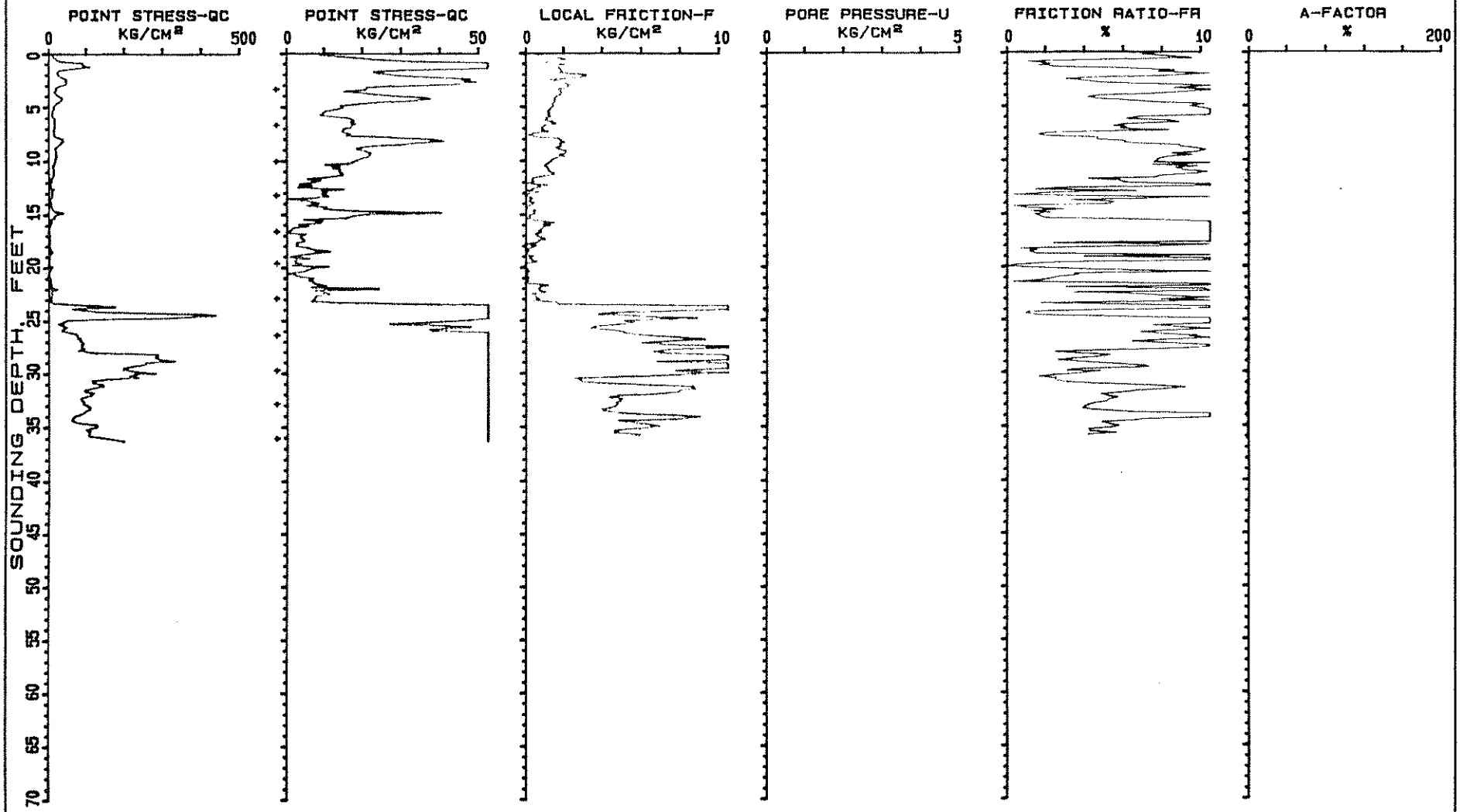

+ PUSH INTERRUPTED TO ADD ROD
PORE PRESSURE DECAY DATA MAY BE AVAILABLE

FILE #..... 70144.01
R.M.T. INC
ASHEVILLE NC
SOUNDING # PC-5
SOUNDING DATE 08/19/93 08:59:49

IN-SITU TECHNOLOGY SOIL BEHAVIOR TABLE

JOB NAME 70144.01
R.M.T. INC
ASHEVILLE NC
FILE NAME..... PC-6

DEPTH FEET	SOIL BEHAVIOR TYPE	QC (KG/CM2)	LF (KG/CM2)	N VALUES	N' #	VERTICAL EFFECTIVE STRESS (KG/CM2)	RELATIVE DENSITY (%) *	FRICTION ANGLE (DEGREES) **	YOUNGS MODULUS (KG/CM2) ***	UNDRAINED SHEAR STRENGTH (KG/CM2) ****	SENSITIVITY	COMP.	OC
1	SILTY FINE SAND	110.5	1.26	27	27	.03	>90%	>48	243	—	—	—	—
2	SILTY FINE SAND	210.8	2.86	52	54	.061	>90%	>48	463	—	—	—	—

\# N'=POINT STRESS*(.2+.04*FRICTION RATIO)
* NORMALLY CONSOLIDATED SANDS
** FOR OVERCONSOLIDATED SANDS, SLIGHTLY REDUCE ABOVE FRICTION ANGLES
*** FOR OVERCONSOLIDATED SANDS, YOUNG'S MODULUS MAY BE AS MUCH AS 3 TO 6 TIMES HIGHER
**** NK OF 16 USED. FOR OVERCONSOLIDATED CLAYS, AN NK OF 17 IS SUGGESTED

THE ABOVE DATA WAS COMPUTED FOLLOWING 'BASIC' GUIDELINES BY P. K. ROBERTSON AND R. G. CAMPANELLA IN THE HANDBOOK 'GUIDELINES FOR USE AND INTERPERTATION OF THE ELECTRONIC CONE PENETRATION TEST' SEPTEMBER, 1984

ADDITIONAL LOCAL CORRELATIONS DEVELOPED BY IN-SITU TECHNOLOGY HAVE ALSO BEEN USED IN COMPUTING THE ABOVE DATA. IT IS THE POLICY OF IN-SITU TECHNOLOGY TO CONTINUALLY UPGRADE AND MODIFY C.P.T CORRELATIONS AS PUBLISHED RESEARCH AND LOCAL EXPERIENCE GROWS.

PIEZOCONE SOUNDING TEST

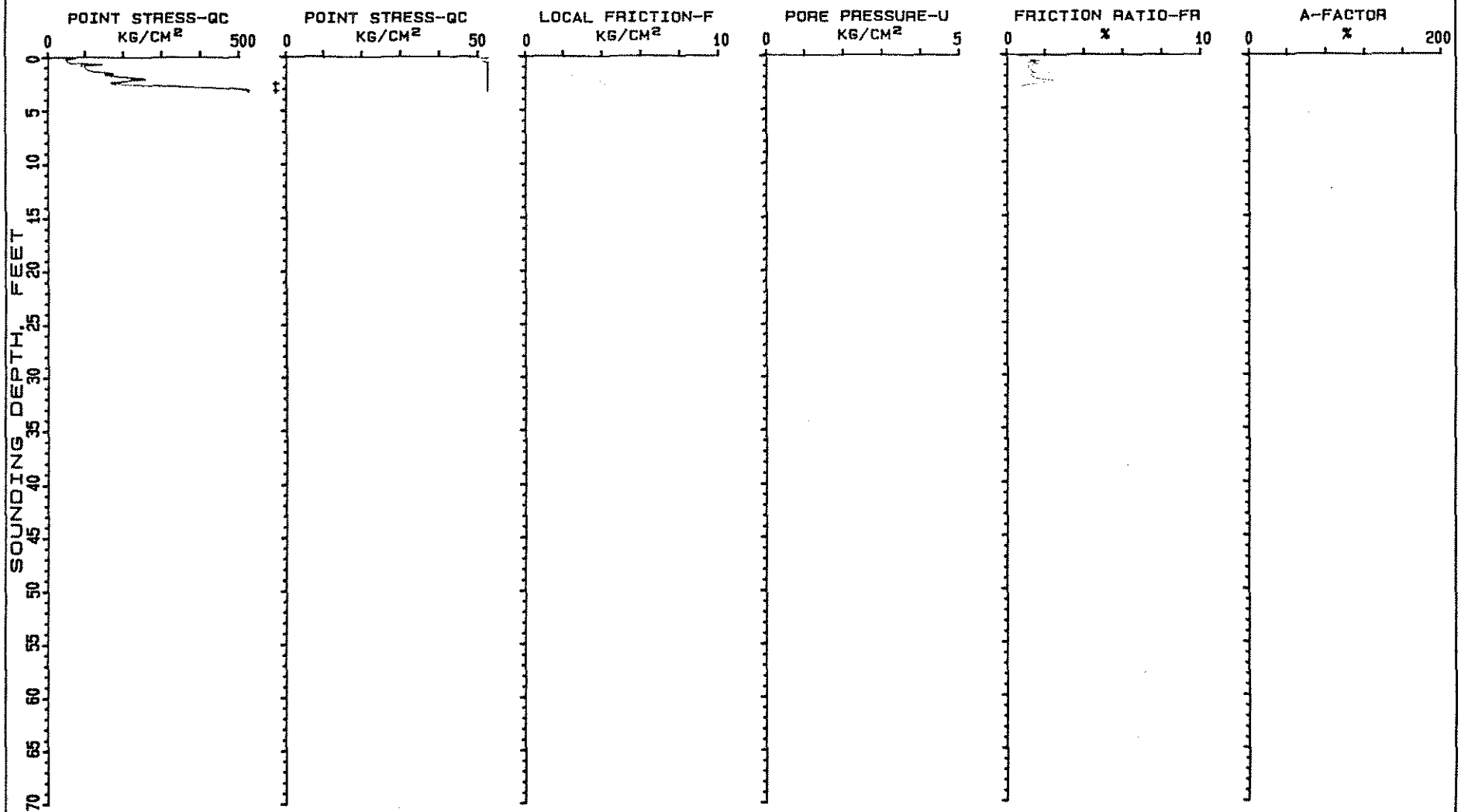

* PUSH INTERRUPTED TO ADD ROD
PORE PRESSURE DECAY DATA MAY BE AVAILABLE

FILE #..... 70144.01
R.M.T. INC
ASHEVILLE NC
SOUNDING # PC-6
SOUNDING DATE 08/24/93 08: 43: 51

IN-SITU TECHNOLOGY SOIL BEHAVIOR TABLE

JOB NAME 70144.01
R.M.T. INC
ASHEVILLE NC
FILE NAME..... PC-7

DEPTH FEET	SOIL BEHAVIOR TYPE	QC (KG/CM2)	LF (KG/CM2)	N VALUES	N'	VERTICAL EFFECTIVE STRESS (KG/CM2)	RELATIVE DENSITY (%) *	FRICTION ANGLE (DEGREES) **	YOUNGS MODULUS (KG/CM2) ***	UNDRAINED SHEAR STRENGTH (KG/CM2) ****	SENSITIVITY	COMP.	O(
				#									
1	SILTY TO CLAYEY F.S.	40.3	.44	13	10	.048	60%-70%	)48	88	—	—	—	—
2	CLAYEY FINE SAND	23.6	.47	9	7	.097	40%-50%	44-46	51	—	—	—	—
3	SILTY TO CLAYEY F.S.	76.4	1.35	25	21	.146	70%-80%	46-48	168	—	—	—	—
4	SANDY CLAY	32	1.19	16	11	.19	—	—	—	2.01	2.6	.01	)6
5	SILTY TO CLAYEY F.S.	44.9	.68	14	12	.239	60%-70%	42-44	98	—	—	—	—
6	SILTY TO CLAYEY F.S.	52.4	.78	17	14	.288	60%-70%	42-44	115	—	—	—	—
7	SILTY TO CLAYEY F.S.	43.8	.62	14	11	.336	50%-60%	42-44	96	—	—	—	—
8	CLAYEY FINE SAND	28.7	.64	11	8	.385	40%-50%	38-40	63	—	—	—	—
9	SILTY TO CLAYEY F.S.	42.4	.75	14	11	.434	50%-60%	40-42	93	—	—	—	—
10	SANDY CLAY	23.5	.72	11	8	.478	—	—	—	1.45	3.2	.02	6
11	CLAYEY FINE SAND	26.7	.47	10	7	.527	(40%	36-38	58	—	—	—	—
12	CLAYEY FINE SAND	40	.92	16	12	.576	40%-50%	38-40	88	—	—	—	—
13	SILTY TO CLAYEY F.S.	39.2	.57	13	10	.625	(40%	38-40	86	—	—	—	—
14	SILTY TO CLAYEY F.S.	68.6	1.06	22	18	.673	50%-60%	40-42	150	—	—	—	—
15	CLAYEY FINE SAND	37.7	.94	15	11	.722	(40%	36-38	82	—	—	—	—
16	CLAYEY FINE SAND	28.9	.56	11	8	.771	(40%	36-38	63	—	—	—	—
17	CLAYEY FINE SAND	20	.43	8	6	.82	(40%	32-34	44	—	—	—	—
18	SILTY TO CLAYEY F.S.	60.6	.79	20	15	.869	40%-50%	38-40	133	—	—	—	—
19	CLAYEY FINE SAND	34.8	.61	13	9	.918	(40%	36-38	76	—	—	—	—
20	SILTY TO CLAYEY F.S.	79.7	1.33	26	21	.966	50%-60%	40-42	175	—	—	—	—
21	FINE SAND	293.1	2.64	58	69	1	)90%	44-46	644	—	—	—	—
22	SILTY TO CLAYEY F.S.	111.9	1.89	37	30	1.03	60%-70%	40-42	246	—	—	—	—
23	SILTY TO CLAYEY F.S.	92.3	1.77	30	26	1.061	50%-60%	40-42	203	—	—	—	—
24	SILTY TO CLAYEY F.S.	87.7	1.74	29	25	1.092	50%-60%	40-42	192	—	—	—	—
25	CLAYEY FINE SAND	20	.43	8	6	1.123	(40%	30-32	44	—	—	—	—
26	CLAYEY FINE SAND	29	.64	11	8	1.153	(40%	32-34	63	—	—	—	—
27	SILTY TO CLAYEY F.S.	86.2	1.35	28	23	1.184	40%-50%	38-40	189	—	—	—	—
28	CLAYEY FINE SAND	88	3.42	35	31	1.215	40%-50%	38-40	193	—	—	—	—
29	CLAYEY FINE SAND	57.3	1.94	22	19	1.246	(40%	36-38	126	—	—	—	—
30	SILTY TO CLAYEY F.S.	102.6	2.85	34	32	1.277	50%-60%	40-42	225	—	—	—	—

PC-7 CONTINUED

31	FINE SAND	322.9	3.5	64	79	1.31	)90%	44-46	710	—	—	—	—
32	SILTY TO CLAYEY F.S.	136	3.08	45	40	1.341	60%-70%	40-42	299	—	—	—	—
33	SILTY TO CLAYEY F.S.	128.4	3.03	42	38	1.371	60%-70%	40-42	282	—	—	—	—
34	SILTY TO CLAYEY F.S.	126.1	3.16	42	38	1.402	60%-70%	40-42	277	—	—	—	—
35	FINE SAND	168.5	1.55	33	40	1.435	70%-80%	40-42	370	—	—	—	—
36	FINE SAND	270.8	2.11	54	63	1.468	80%-90%	42-44	595	—	—	—	—
37	SILTY FINE SAND	202.4	4.06	50	57	1.499	70%-80%	42-44	445	—	—	—	—
38	CLAYEY FINE SAND	132.1	3.97	52	42	1.53	50%-60%	40-42	290	—	—	—	—
39	FINE SAND	240.6	2.4	48	58	1.563	80%-90%	42-44	529	—	—	—	—
40	DENSE OR CEMENTED SAND	318	2.18	53	72	1.6	)90%	42-44	699	—	—	—	—
41	SILTY FINE SAND	275.4	5.4	68	77	1.631	80%-90%	42-44	605	—	—	—	—
42	SILTY FINE SAND	199.1	3.15	49	52	1.661	70%-80%	40-42	438	—	—	—	—
43	FINE SAND	289	2.11	57	66	1.695	80%-90%	42-44	635	—	—	—	—

\# N'=POINT STRESS*(.2+.04*FRICTION RATIO)

* NORMALLY CONSOLIDATED SANDS

** FOR OVERCONSOLIDATED SANDS, SLIGHTLY REDUCE ABOVE FRICTION ANGLES

*** FOR OVERCONSOLIDATED SANDS, YOUNG'S MODULUS MAY BE AS MUCH AS 3 TO 6 TIMES HIGHER

**** NK OF 16 USED. FOR OVERCONSOLIDATED CLAYS, AN NK OF 17 IS SUGGESTED

THE ABOVE DATA WAS COMPUTED FOLLOWING 'BASIC' GUIDELINES BY P. K. ROBERTSON AND R. G. CAMPANELLA IN THE HANDBOOK 'GUIDELINES FOR USE AND INTERPERTATION OF THE ELECTRONIC CONE PENETRATION TEST' SEPTEMBER, 1984

ADDITIONAL LOCAL CORRELATIONS DEVELOPED BY IN-SITU TECHNOLOGY HAVE ALSO BEEN USED IN COMPUTING THE ABOVE DATA. IT IS THE POLICY OF IN-SITU TECHNOLOGY TO CONTINUALLY UPGRADE AND MODIFY C.P.T CORRELATIONS AS PUBLISHED RESEARCH AND LOCAL EXPERIENCE GROWS.

PIEZOCONE SOUNDING TEST

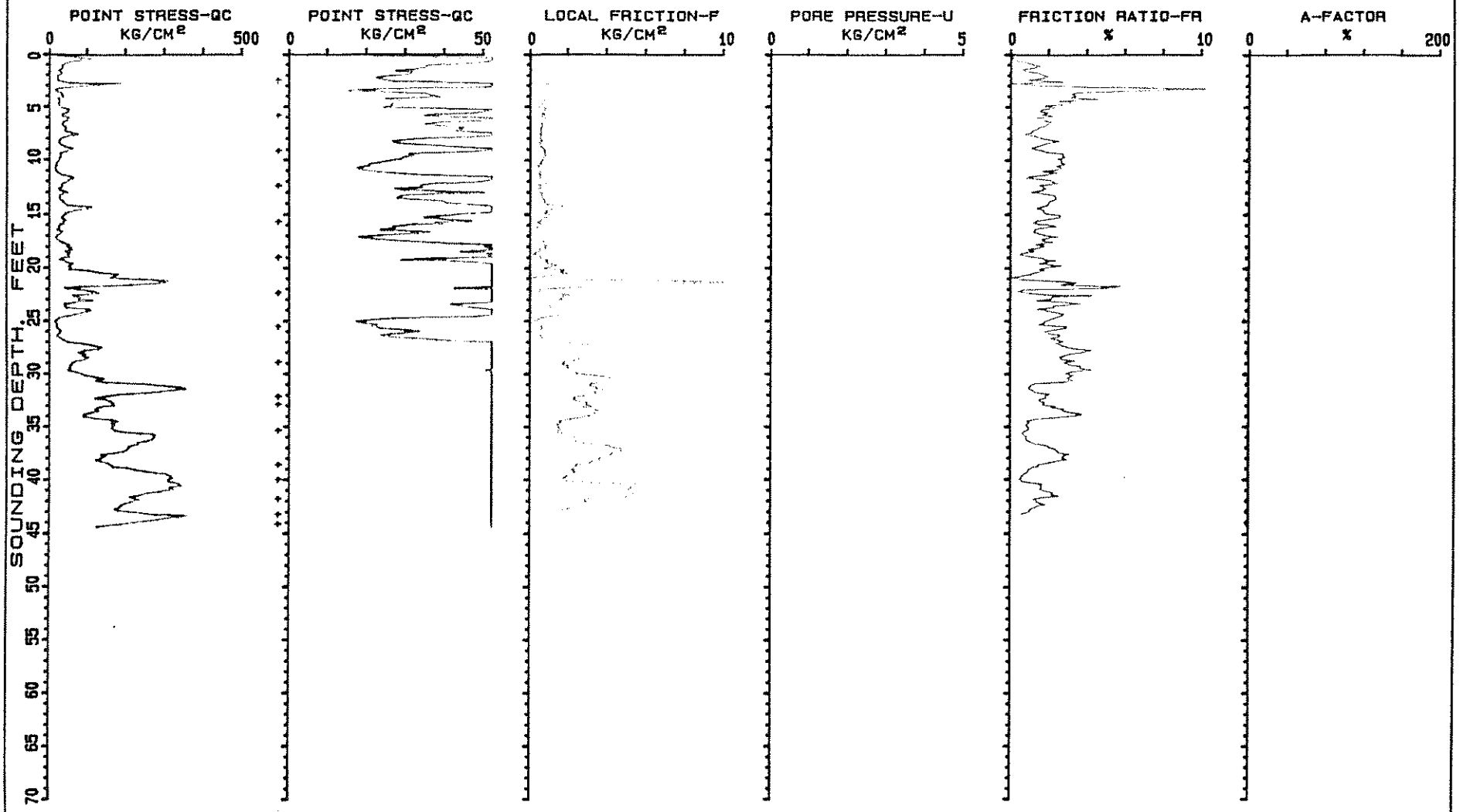

+ PUSH INTERRUPTED TO ADD ROD
PORE PRESSURE DECAY DATA MAY BE AVAILABLE

FILE #..... 70144.01
R.M.T. INC
ASHEVILLE NC
SOUNDING # PC-7
SOUNDING DATE 08/24/93 09: 24: 12

IN-SITU TECHNOLOGY SOIL BEHAVIOR TABLE
FOR SOUTHEASTERN UNITED STATES SOILS

JOB NAME ..... R M T
D.O.T STATION
ASHVILLE N.C.
FILE NAME..... PC-1

DEPTH FEET	SOIL BEHAVIOR TYPE	QC (KG/CM2)	LF (KG/CM2)	N VALUES	N' #	VERTICAL EFFECTIVE STRESS (KG/CM2)	RELATIVE DENSITY (%) *	FRICTION ANGLE (DEGREES) **	YOUNGS MODULUS (KG/CM2) ***	UNDRAINED SHEAR STRENGTH (KG/CM2) ****	SENSITIVITY	COMP.	OCR
1	CLAYEY FINE SAND	11.7	.05	4	3	.048	40%-50%	44-46	25	—	—	—	—
2	SANDY CLAY	15.4	.41	7	5	.092	—	—	—	.99	3.7	.01	>6
3	SILTY FINE SAND	90.4	.92	22	22	.141	70%-80%	>48	198	—	—	—	—
4	DENSE OR CEMENTED SANDS	233.9	.55	38	49	.2	>90%	>48	514	—	—	—	—

\# N'=POINT STRESS*(.2+.04*FRICTION RATIO)
* NORMALLY CONSOLIDATED SANDS
** FOR OVERCONSOLIDATED SANDS, SLIGHTLY REDUCE ABOVE FRICTION ANGLES
*** FOR OVERCONSOLIDATED SANDS, YOUNG'S MODULUS MAY BE AS MUCH AS 3 TO 6 TIMES HIGHER
**** NK OF 16 USED. FOR OVERCONSOLIDATED CLAYS, AN NK OF 17 IS SUGGESTED

THE ABOVE DATA WAS COMPUTED FOLLOWING 'BASIC' GUIDELINES BY P. K. ROBERTSON AND R. G. CAMPANELLA IN THE HANDBOOK 'GUIDELINES FOR USE AND INTERPERTATION OF THE ELECTRONIC CONE PENETRATION TEST' SEPTEMBER, 1984

ADDITIONAL LOCAL CORRELATIONS DEVELOPED BY IN-SITU TECHNOLOGY HAVE ALSO BEEN USED IN COMPUTING THE ABOVE DATA. IT IS THE POLICY OF IN-SITU TECHNOLOGY TO CONTINUALLY UPGRADE AND MODIFY C.P.T CORRELATIONS AS PUBLISHED RESEARCH AND LOCAL EXPERIENCE GROWS.

PIEZOCONE SOUNDING TEST

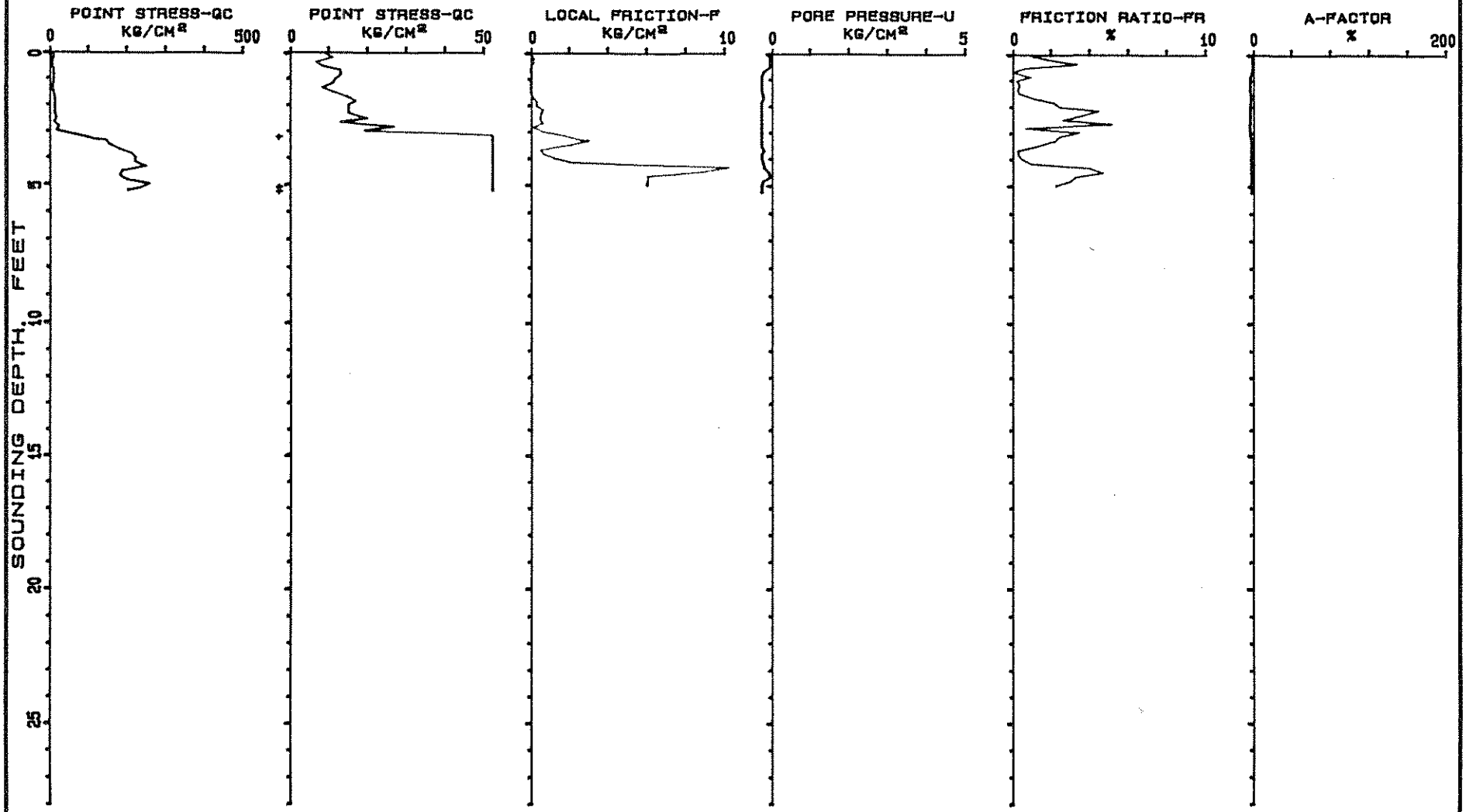

* PUSH INTERRUPTED TO ADD ROD
PORE PRESSURE DECAY DATA MAY BE AVAILABLE

FILE #..... R M T
D.O.T STATION
ASHVILLE N.C.
SOUNDING # PC-1
SOUNDING DATE 03/15/94 13: 20: 11

IN-SITU TECHNOLOGY SOIL BEHAVIOR TABLE
FOR SOUTHEASTERN UNITED STATES SOILS

JOB NAME ..... R M T
D.O.T STATION
ASHVILLE N.C.
FILE NAME..... PC-1A

DEPTH FEET	SOIL BEHAVIOR TYPE	QC (KG/CM2)	LF (KG/CM2)	N VALUES	N' #	VERTICAL EFFECTIVE STRESS (KG/CM2)	RELATIVE DENSITY (%) *	FRICTION ANGLE (DEGREES) **	YOUNGS MODULUS (KG/CM2) ***	UNDRAINED SHEAR STRENGTH (KG/CM2) ****	SENSITIVITY	COMP.	OCR
1	CLAYEY FINE SAND	22.6	.36	9	6	.048	50%-60%	46-48	49	—	—	—	—
2	CLAYEY FINE SAND	27.8	.72	11	8	.097	50%-60%	44-46	61	—	—	—	—
3	CLAY	27.5	1.48	27	11	.136	—	—	—	1.74	1.8	UD	)6
4	FINE SAND	163.6	1.71	32	40	.19	)90%	)48	359	—	—	—	—
5	SILTY FINE SAND	199.1	3.74	49	55	.239	)90%	)48	438	—	—	—	—
6	CLAYEY FINE SAND	110.4	3.57	44	36	.288	80%-90%	46-48	242	—	—	—	—
7	SANDY CLAY	32	1.16	16	11	.332	—	—	—	2	2.7	.01	)6
	SILTY TO CLAYEY F.S.	116.5	3.29	38	36	.38	70%-80%	44-46	256	—	—	—	—

\# N'=POINT STRESS*(.2+.04*FRICTION RATIO)
* NORMALLY CONSOLIDATED SANDS
** FOR OVERCONSOLIDATED SANDS, SLIGHTLY REDUCE ABOVE FRICTION ANGLES
*** FOR OVERCONSOLIDATED SANDS, YOUNG'S MODULUS MAY BE AS MUCH AS 3 TO 6 TIMES HIGHER
**** NK OF 16 USED. FOR OVERCONSOLIDATED CLAYS, AN NK OF 17 IS SUGGESTED

THE ABOVE DATA WAS COMPUTED FOLLOWING 'BASIC' GUIDELINES BY P. K. ROBERTSON AND R. G. CAMPANELLA IN THE HANDBOOK 'GUIDELINES FOR USE AND INTERPERTATION OF THE ELECTRONIC CONE PENETRATION TEST' SEPTEMBER, 1984

ADDITIONAL LOCAL CORRELATIONS DEVELOPED BY IN-SITU TECHNOLOGY HAVE ALSO BEEN USED IN COMPUTING THE ABOVE DATA. IT IS THE POLICY OF IN-SITU TECHNOLOGY TO CONTINUALLY UPGRADE AND MODIFY C.P.T CORRELATIONS AS PUBLISHED RESEARCH AND LOCAL EXPERIENCE GROWS.

PIEZOCONE SOUNDING TEST

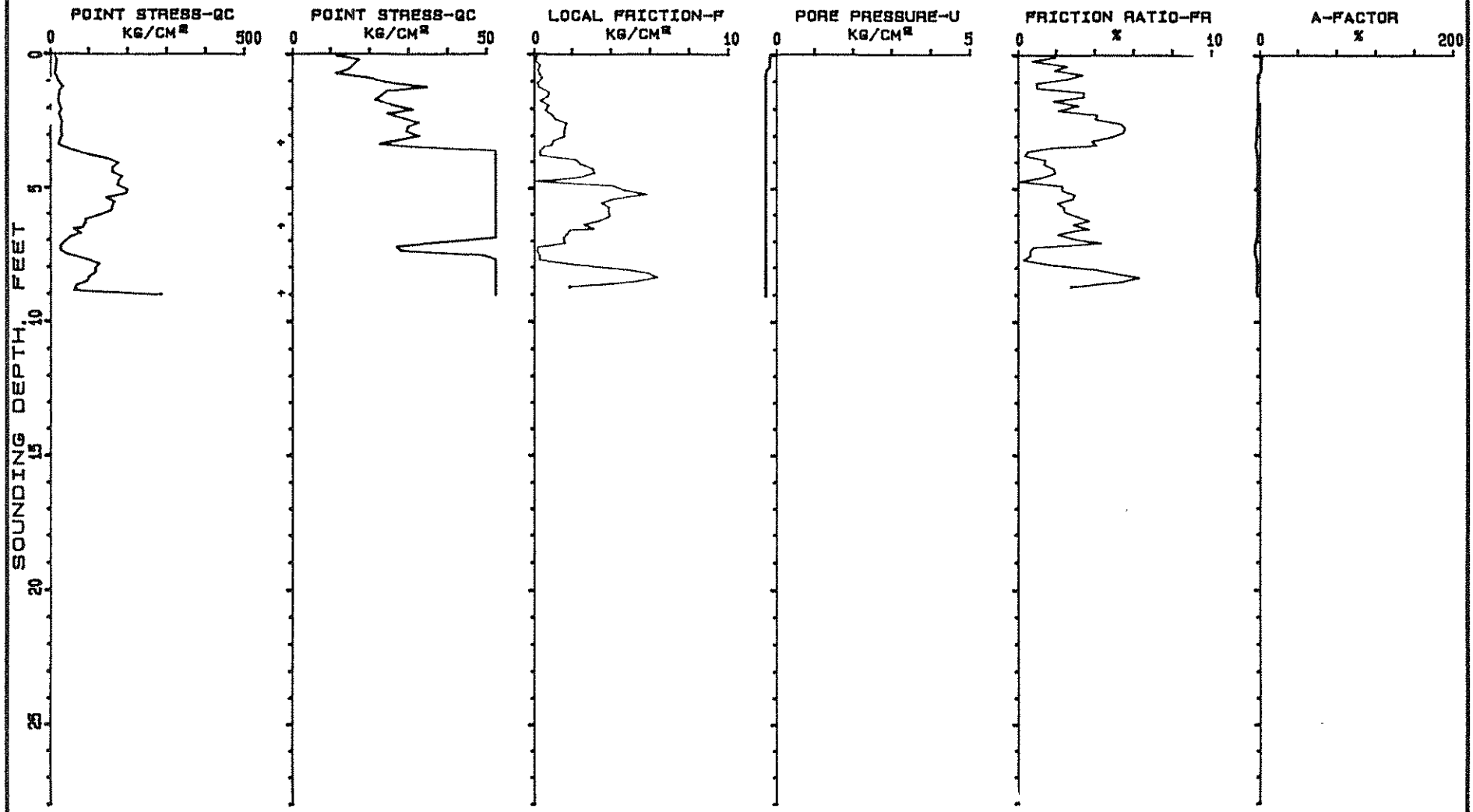

* PUSH INTERRUPTED TO ADD ROD
PORE PRESSURE DECAY DATA MAY BE AVAILABLE

FILE #..... R M T
D.O.T STATION
ASHVILLE N.C.
SOUNDING # PC-1A
SOUNDING DATE 03/15/94 14: 14: 39

IN-SITU TECHNOLOGY SOIL BEHAVIOR TABLE
FOR SOUTHEASTERN UNITED STATES SOILS

JOB NAME ..... R M T
D.O.T STATION
ASHVILLE N.C.
FILE NAME..... PC-1B

DEPTH FEET	SOIL BEHAVIOR TYPE	QC (KG/CM2)	LF (KG/CM2)	N VALUES	N' #	VERTICAL EFFECTIVE STRESS (KG/CM2)	RELATIVE DENSITY (%) *	FRICTION ANGLE (DEGREES) **	YOUNGS MODULUS (KG/CM2) ***	UNDRAINED SHEAR STRENGTH (KG/CM2) ****	SENSITIVITY	COMP.	OCR
1	CLAYEY FINE SAND	14.1	.14	5	3	.048	40%-50%	44-46	31	—	—	—	—
2	SILTY TO CLAYEY F.S.	31.5	.45	10	8	.097	50%-60%	46-48	69	—	—	—	—
3	SANDY CLAY	20.1	.69	10	7	.141	—	—	—	1.27	2.9	.02	>6
4	SILTY TO CLAYEY F.S.	90.1	1.98	30	26	.19	70%-80%	46-48	198	—	—	—	—
5	SANDY CLAY	65.9	2.5	32	23	.234	—	—	—	4.13	2.6	0	>6
6	SANDY CLAY	28.5	1.05	14	10	.278	—	—	—	1.79	2.6	.02	>6
7	SILTY FINE SAND	67.1	.69	16	16	.327	60%-70%	44-46	147	—	—	—	—

\# N'=POINT STRESS*(.2+.04*FRICTION RATIO)
* NORMALLY CONSOLIDATED SANDS
** FOR OVERCONSOLIDATED SANDS,SLIGHTLY REDUCE ABOVE FRICTION ANGLES
*** FOR OVERCONSOLIDATED SANDS, YOUNG'S MODULUS MAY BE AS MUCH AS 3 TO 6 TIMES HIGHER
**** NK OF 16 USED. FOR OVERCONSOLIDATED CLAYS, AN NK OF 17 IS SUGGESTED

THE ABOVE DATA WAS COMPUTED FOLLOWING 'BASIC' GUIDELINES BY P. K. ROBERTSON AND R. G. CAMPANELLA IN THE HANDBOOK 'GUIDELINES FOR USE AND INTERPERTATION OF THE ELECTRONIC CONE PENETRATION TEST' SEPTEMBER,1984

ADDITIONAL LOCAL CORRELATIONS DEVELOPED BY IN-SITU TECHNOLOGY HAVE ALSO BEEN USED IN COMPUTING THE ABOVE DATA. IT IS THE POLICY OF IN-SITU TECHNOLOGY TO CONTINUALLY UPGRADE AND MODIFY C.P.T CORRELATIONS AS PUBLISHED RESEARCH AND LOCAL EXPERIENCE GROWS.

PIEZOCONE SOUNDING TEST

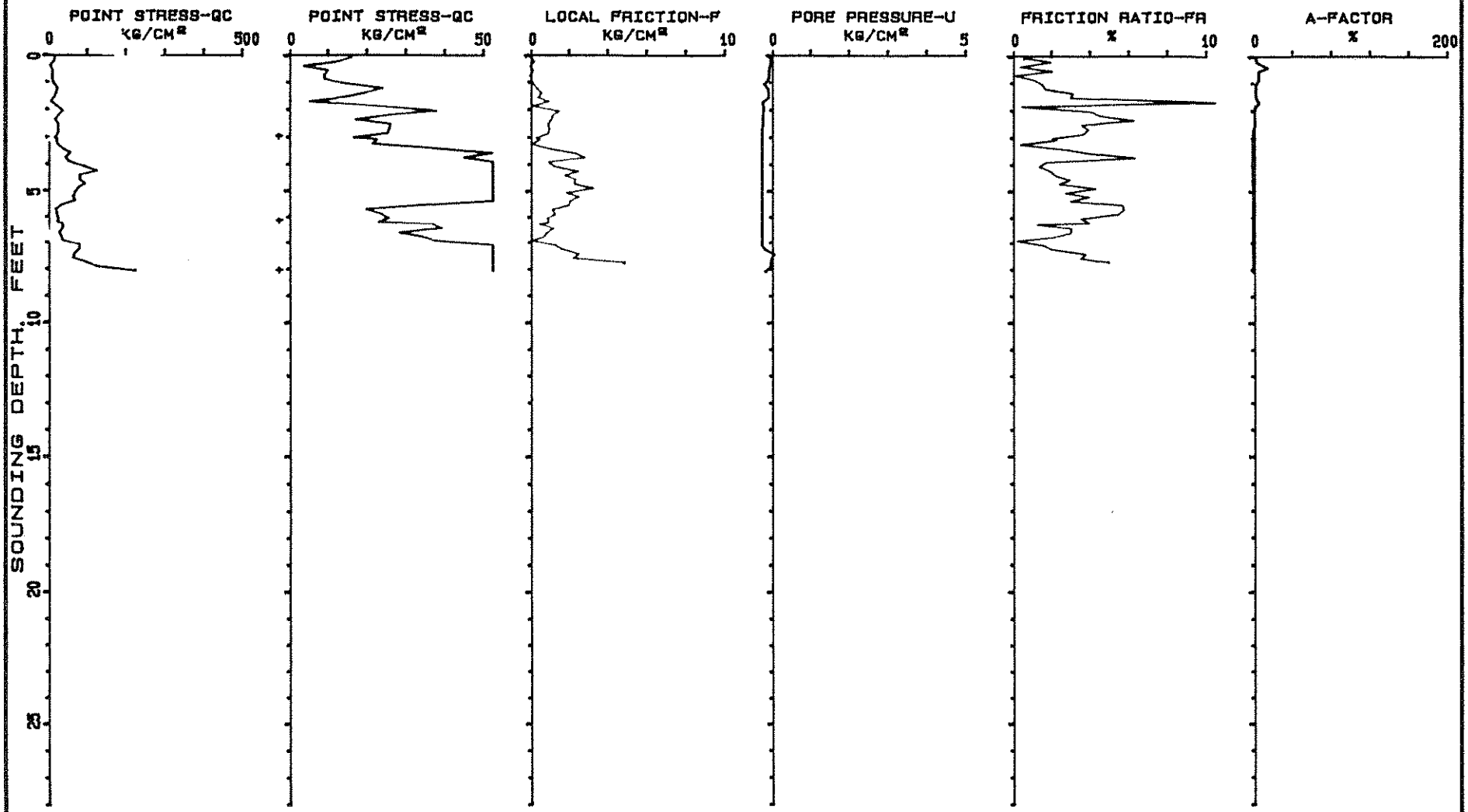

+ PUSH INTERRUPTED TO ADD ROD
PORE PRESSURE DECAY DATA MAY BE AVAILABLE

FILE #..... R M T
D.O.T STATION
ASHVILLE N.C.
SOUNDING # PC-1B
SOUNDING DATE 03/15/94 15: 04: 32

IN-SITU TECHNOLOGY SOIL BEHAVIOR TABLE
FOR SOUTHEASTERN UNITED STATES SOILS

JOB NAME ..... R M T
D.O.T STATION
ASHVILLE N.C.
FILE NAME..... PC-1C

DEPTH FEET	SOIL BEHAVIOR TYPE	QC (KG/CM2)	LF (KG/CM2)	N VALUES	N' #	VERTICAL EFFECTIVE STRESS (KG/CM2)	RELATIVE DENSITY (%) *	FRICTION ANGLE (DEGREES) **	YOUNGS MODULUS (KG/CM2) ***	UNDRAINED SHEAR STRENGTH (KG/CM2) ****	SENSITIVITY	COMP.	OCR
1	SILTY CLAY TO CLAY	10.4	.34	6	3	.043	—	—	—	.68	3	.02	)6
2	CLAYEY FINE SAND	53.6	1.25	21	16	.092	70%-80%	)48	117	—	—	—	—
3	SILTY TO CLAYEY F.S.	94.9	2.21	31	28	.141	80%-90%	)48	208	—	—	—	—
4	CLAY	39	2.74	39	19	.18	—	—	—	2.45	1.4	UD	)6
5	CLAY	50.2	4.05	50	26	.219	—	—	—	3.15	1.2	UD	)6
6	CLAY	40.8	4.08	40	24	.258	—	—	—	2.56	.9	UD	)6
7	SANDY CLAY	86.1	3.58	43	32	.302	—	—	—	5.38	2.4	0	)6
8	STIFF CLAY	93.5	4.09	93	35	.351	—	—	—	5.84	2.2	UD	)6
9	CLAYEY FINE SAND	139.5	4.83	55	47	.4	80%-90%	46-48	306	—	—	—	—

\# N'=POINT STRESS*(.2+.04*FRICTION RATIO)
* NORMALLY CONSOLIDATED SANDS
** FOR OVERCONSOLIDATED SANDS, SLIGHTLY REDUCE ABOVE FRICTION ANGLES
*** FOR OVERCONSOLIDATED SANDS, YOUNG'S MODULUS MAY BE AS MUCH AS 3 TO 6 TIMES HIGHER
**** NK OF 16 USED. FOR OVERCONSOLIDATED CLAYS, AN NK OF 17 IS SUGGESTED

THE ABOVE DATA WAS COMPUTED FOLLOWING 'BASIC' GUIDELINES BY P. K. ROBERTSON AND R. G. CAMPANELLA IN THE HANDBOOK 'GUIDELINES FOR USE AND INTERPERTATION OF THE ELECTRONIC CONE PENETRATION TEST' SEPTEMBER, 1984

ADDITIONAL LOCAL CORRELATIONS DEVELOPED BY IN-SITU TECHNOLOGY HAVE ALSO BEEN USED IN COMPUTING THE ABOVE DATA. IT IS THE POLICY OF IN-SITU TECHNOLOGY TO CONTINUALLY UPGRADE AND MODIFY C.P.T CORRELATIONS AS PUBLISHED RESEARCH AND LOCAL EXPERIENCE GROWS.

PIEZOCONE SOUNDING TEST

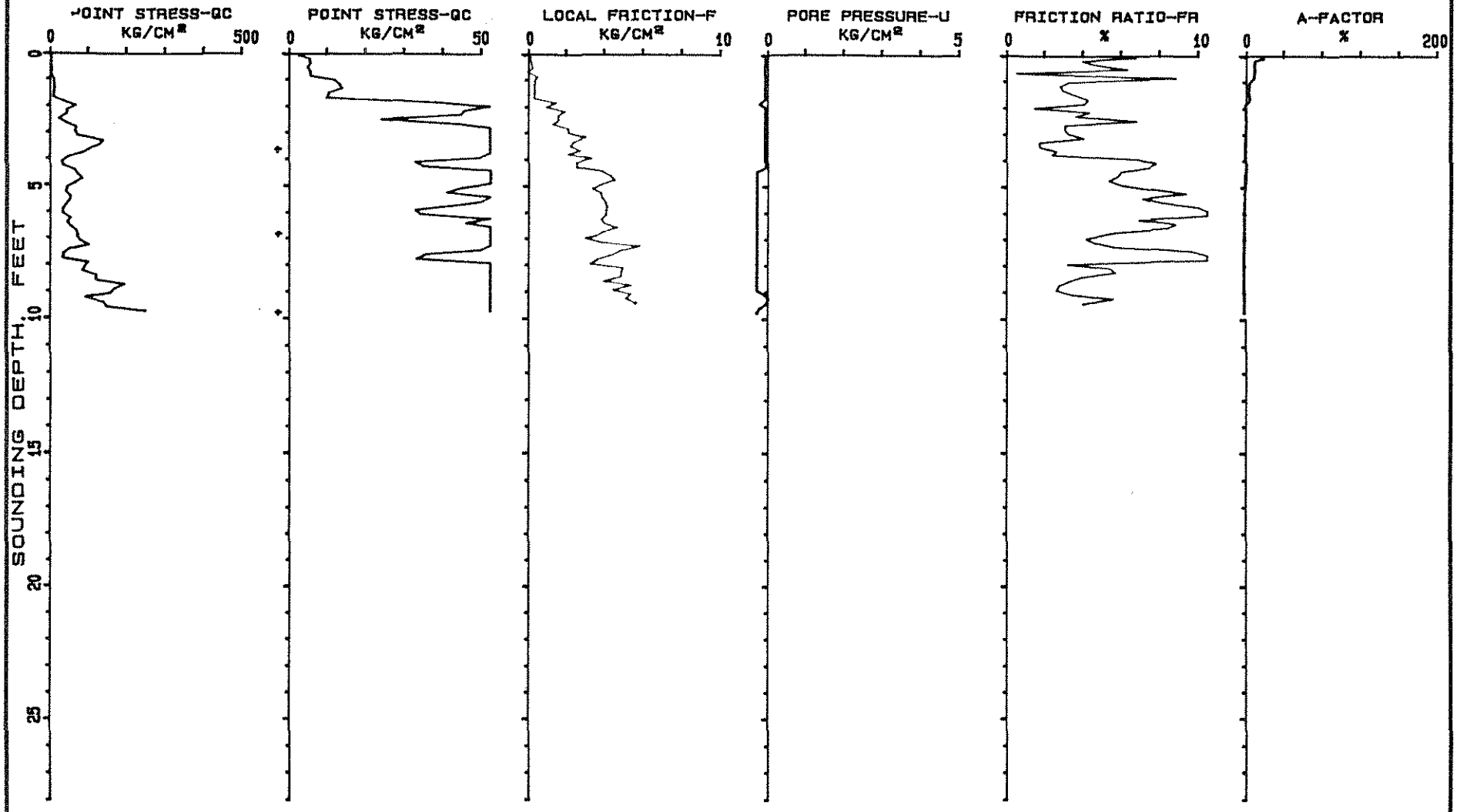

* PUSH INTERRUPTED TO ADD ROD
PORE PRESSURE DECAY DATA MAY BE AVAILABLE

FILE #..... R M T
D.O.T STATION
ASHVILLE N.C.
SOUNDING # PC-1C
SOUNDING DATE 03/16/94 09: 13: 47

IN-SITU TECHNOLOGY SOIL BEHAVIOR TABLE
FOR SOUTHEASTERN UNITED STATES SOILS

JOB NAME ..... #70144.02
RMT

FILE NAME..... PC-12A

DEPTH FEET	SOIL BEHAVIOR TYPE	QC (KG/CM2)	LF (KG/CM2)	N VALUES	N' #	VERTICAL EFFECTIVE STRESS (KG/CM2)	RELATIVE DENSITY (%) *	FRICTION ANGLE (DEGREES) **	YOUNGS MODULUS (KG/CM2) ***	UNDRAINED SHEAR STRENGTH (KG/CM2) ****	SENSITIVITY	COMP.	OCR
1	SILTY TO CLAYEY F.S.	75.7	1.22	25	20	.048	70%-80%	)48	166	—	—	—	—
2	SILTY TO CLAYEY F.S.	44.2	.49	14	11	.097	60%-70%	46-48	97	—	—	—	—
3	CLAYEY FINE SAND	29.8	.7	11	9	.146	50%-60%	44-46	65	—	—	—	—
4	SILTY FINE SAND	62.6	.46	15	14	.195	70%-80%	44-46	137	—	—	—	—
5	DENSE OR CEMENTED SANDS	352.4	1.19	58	75	.253	)90%	)48	775	—	—	—	—
6	DENSE OR CEMENTED SANDS	758.2	4.6	126	170	.312	)90%	)48	1668	—	—	—	—
7	DENSE OR CEMENTED SANDS	483.4	1.79	80	104	.371	)90%	)48	1063	—	—	—	—
[illegible]	FINE SAND	302.7	4.04	60	77	.424	)90%	)48	665	—	—	—	—
[illegible]	SILTY FINE SAND	210.6	3.15	52	55	.473	)90%	46-48	463	—	—	—	—

\# N'=POINT STRESS*(.2+.04*FRICTION RATIO)
* NORMALLY CONSOLIDATED SANDS
** FOR OVERCONSOLIDATED SANDS, SLIGHTLY REDUCE ABOVE FRICTION ANGLES
*** FOR OVERCONSOLIDATED SANDS, YOUNG'S MODULUS MAY BE AS MUCH AS 3 TO 6 TIMES HIGHER
**** NK OF 16 USED. FOR OVERCONSOLIDATED CLAYS, AN NK OF 17 IS SUGGESTED

THE ABOVE DATA WAS COMPUTED FOLLOWING 'BASIC' GUIDELINES BY P. K. ROBERTSON AND R. G. CAMPANELLA IN THE HANDBOOK 'GUIDELINES FOR USE AND INTERPERTATION OF THE ELECTRONIC CONE PENETRATION TEST' SEPTEMBER, 1984

ADDITIONAL LOCAL CORRELATIONS DEVELOPED BY IN-SITU TECHNOLOGY HAVE ALSO BEEN USED IN COMPUTING THE ABOVE DATA. IT IS THE POLICY OF IN-SITU TECHNOLOGY TO CONTINUALLY UPGRADE AND MODIFY C.P.T CORRELATIONS AS PUBLISHED RESEARCH AND LOCAL EXPERIENCE GROWS.

PIEZOCONE SOUNDING TEST

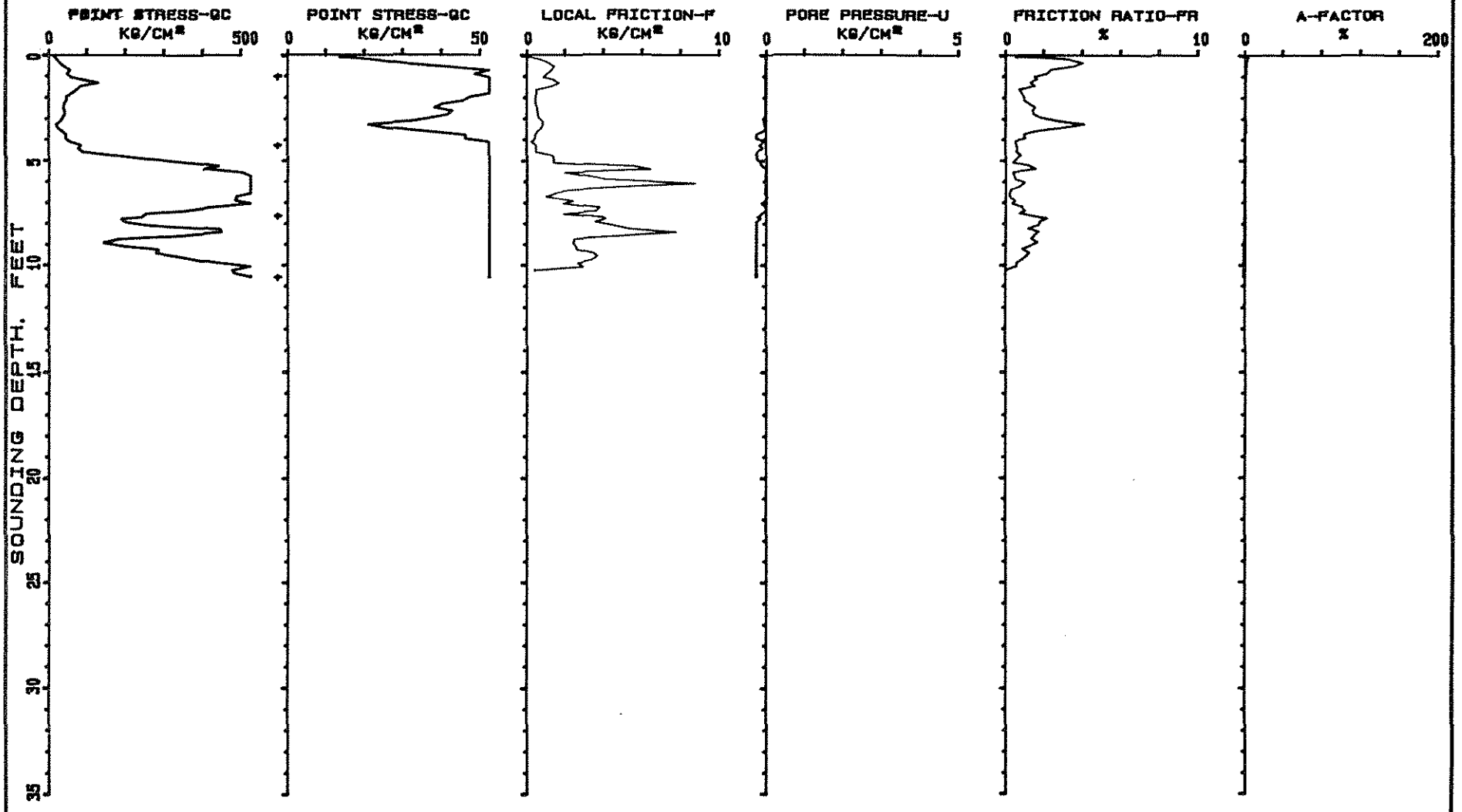

* PUSH INTERRUPTED TO ADD ROD
PORE PRESSURE DECAY DATA MAY BE AVAILABLE

FILE #..... PROJECT# 70144.02
RMT

SOUNDING # PC-12A
SOUNDING DATE 07/19/94 11:48:45

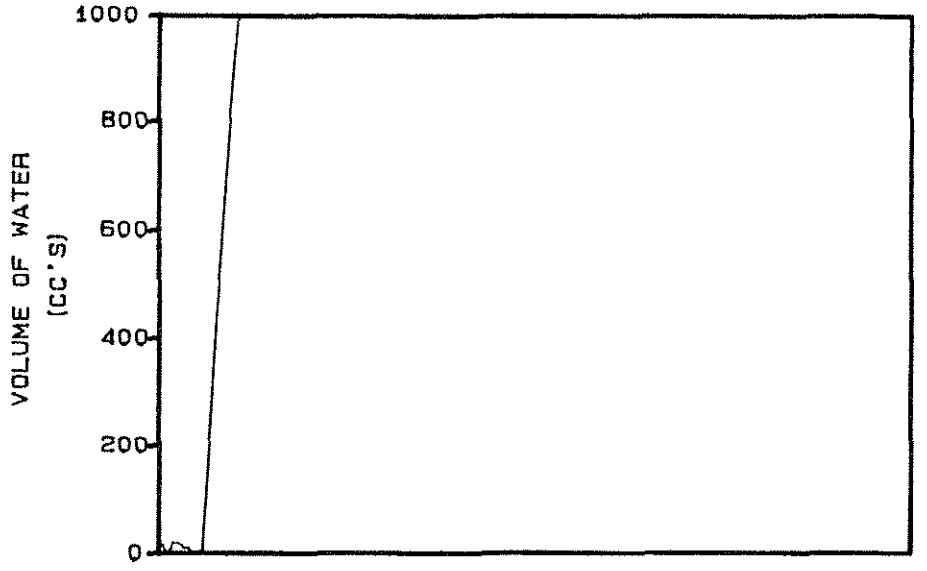

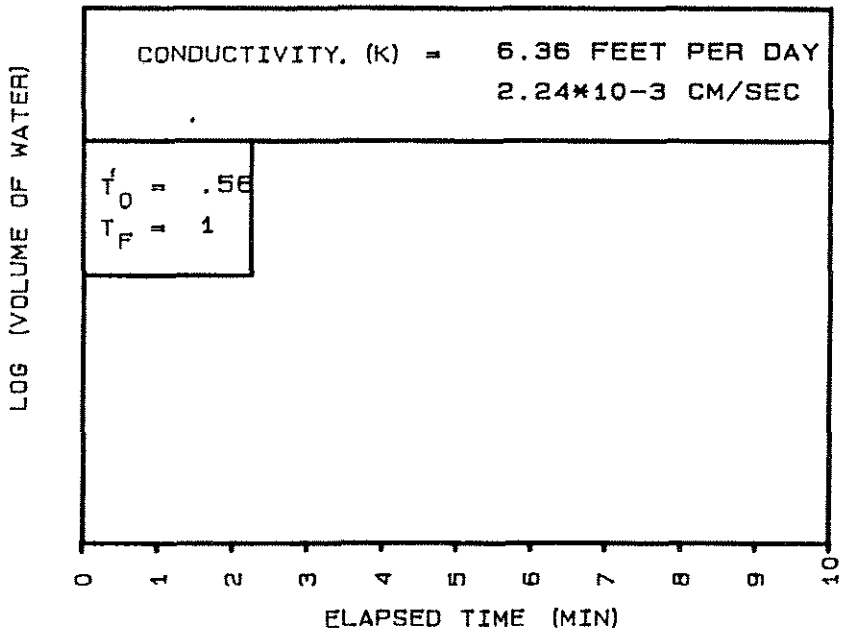

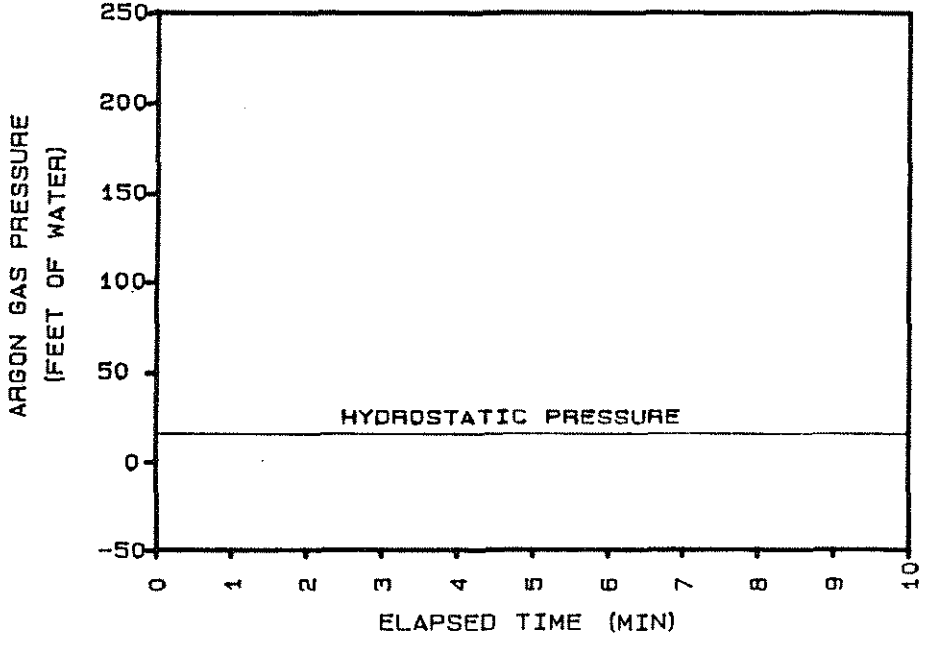

70144.01
LOCATION... HC1-19
TEST DATE
08/16/93 14: 41: 44

SAMPLE DEPTH (FT) 19
GROUNDWATER DEPTH (FT) 4

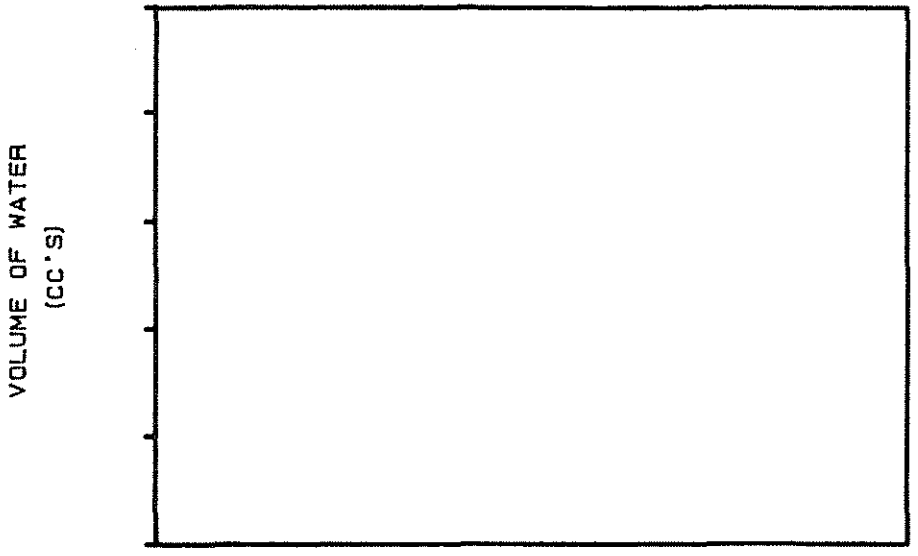

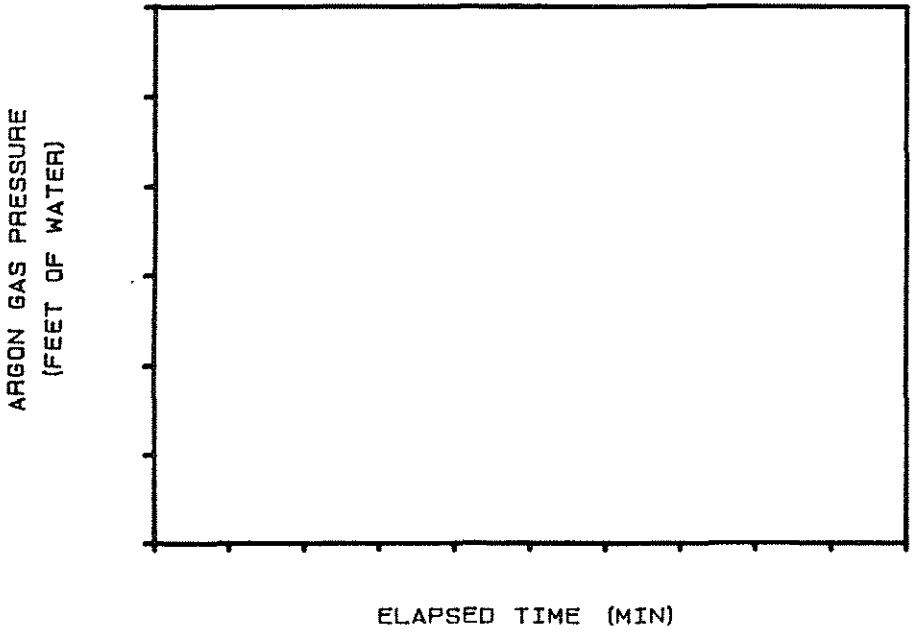

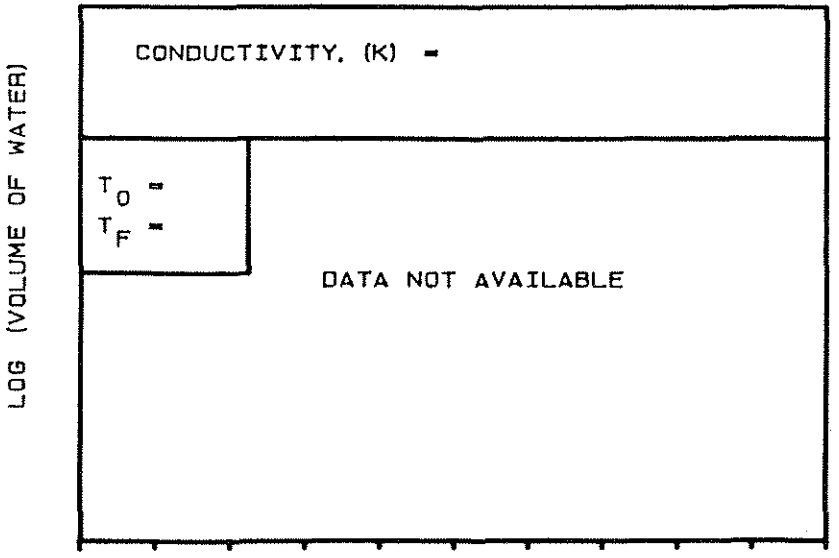

LOCATION... HC2-9

DATA NOT AVAILABLE

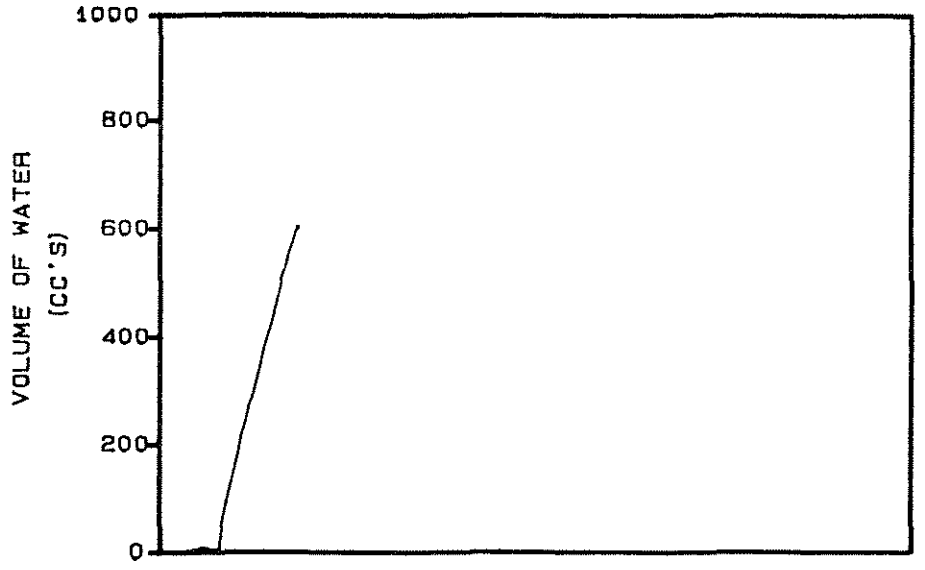

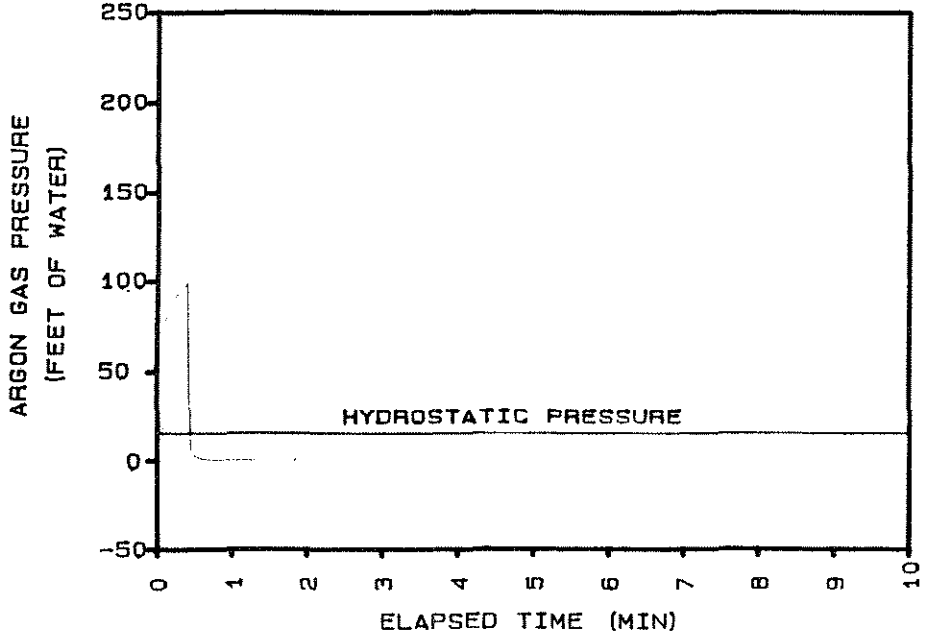

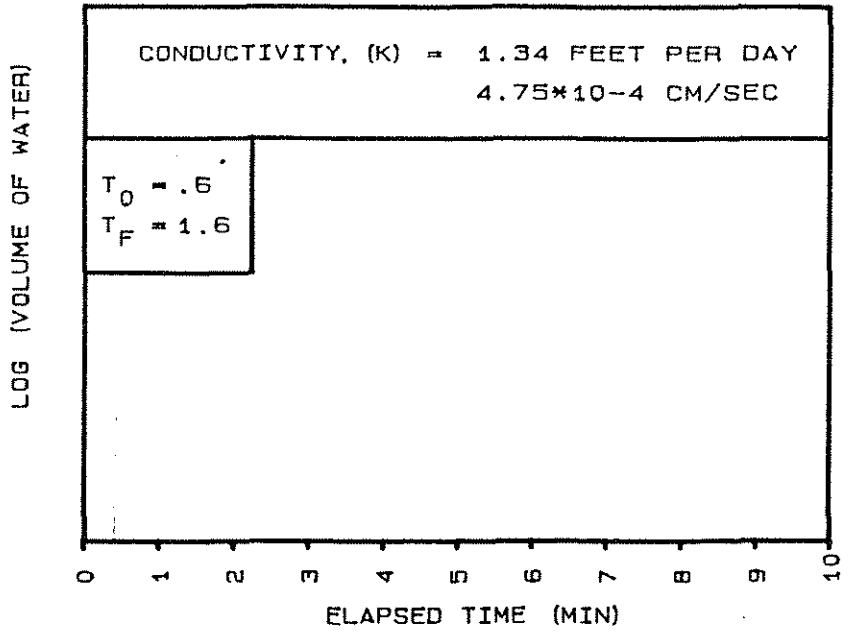

CONDUCTIVITY, (K) = 1.34 FEET PER DAY
4.75*10-4 CM/SEC

T_0 = .6
T_F = 1.6

70144.01
LOCATION... HC2-19
TEST DATE
08/17/93 08: 46: 15

SAMPLE DEPTH (FT) 19
GROUNDWATER DEPTH (FT) 4

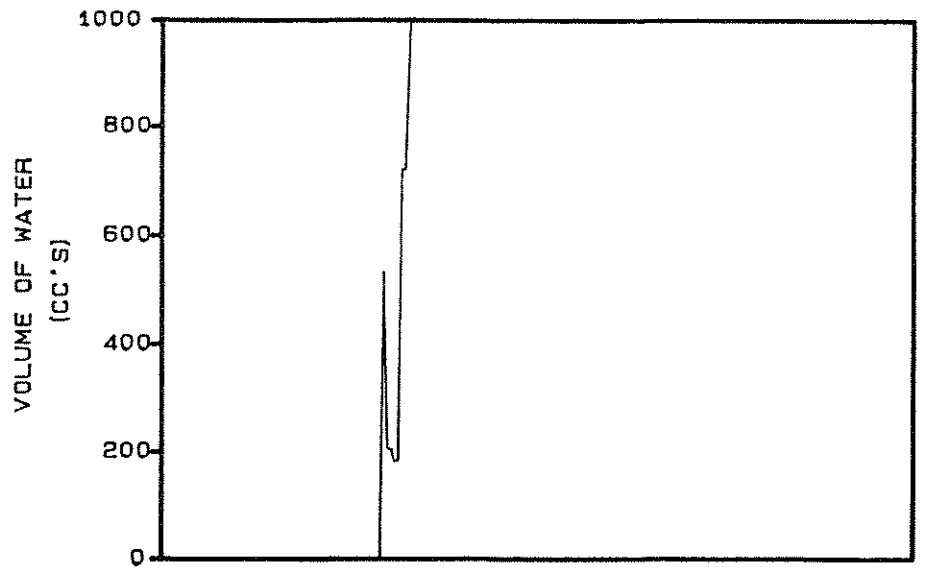

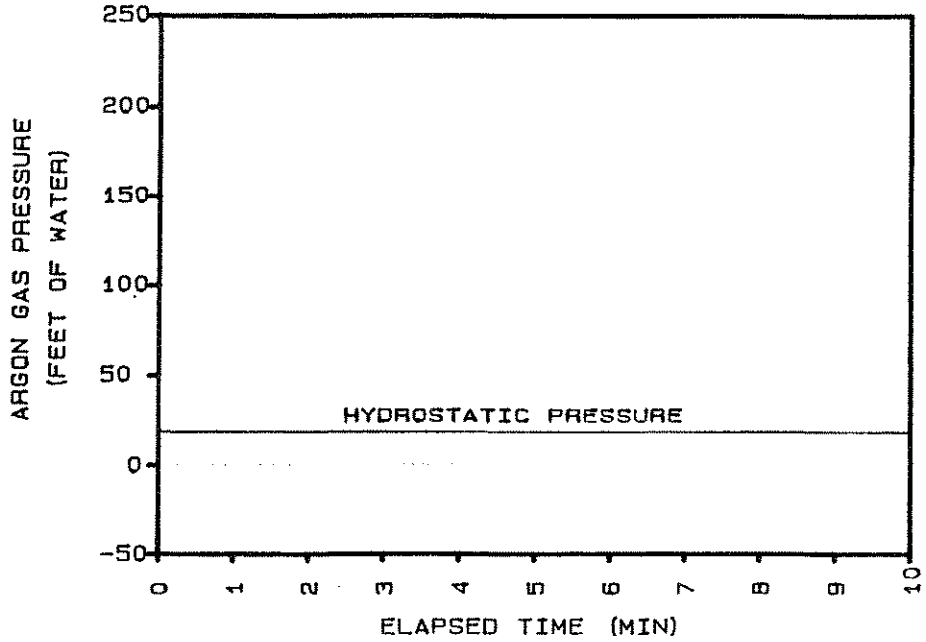

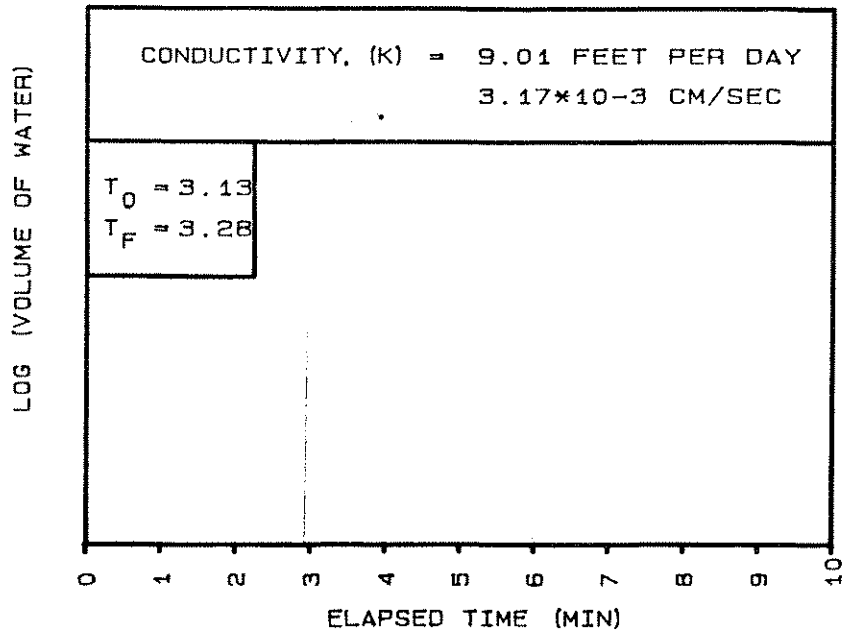

70144.01
LOCATION... HC3-9
TEST DATE
08/17/93 12: 38: 14

SAMPLE DEPTH (FT) 24
GROUNDWATER DEPTH (FT) 6

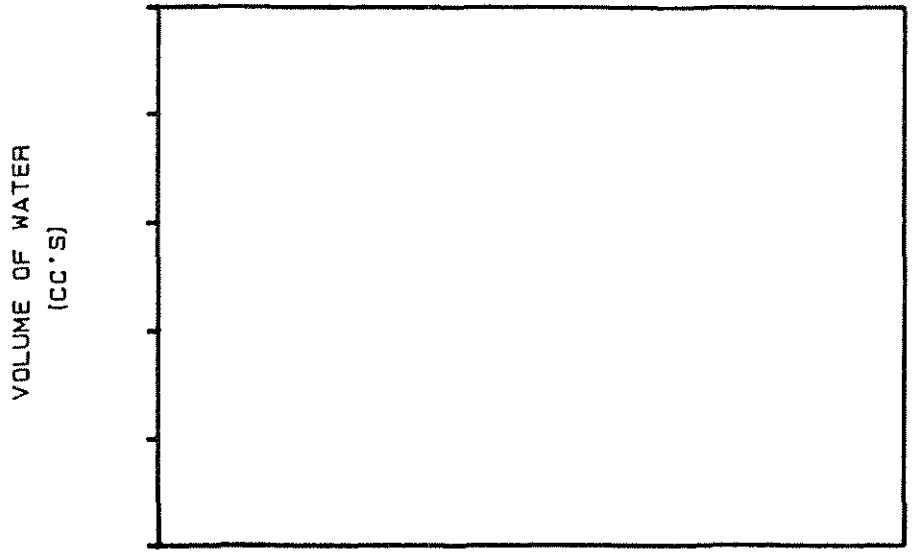

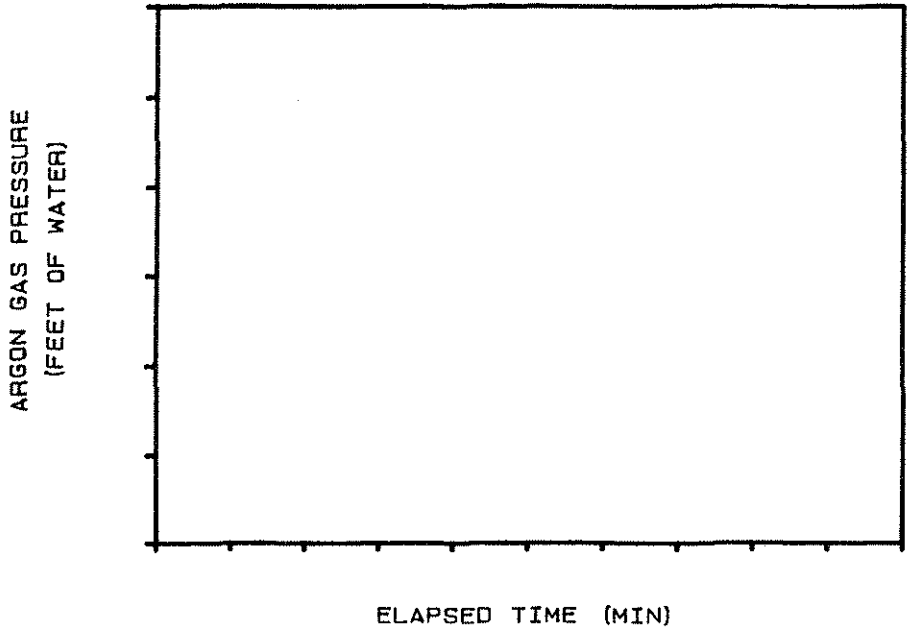

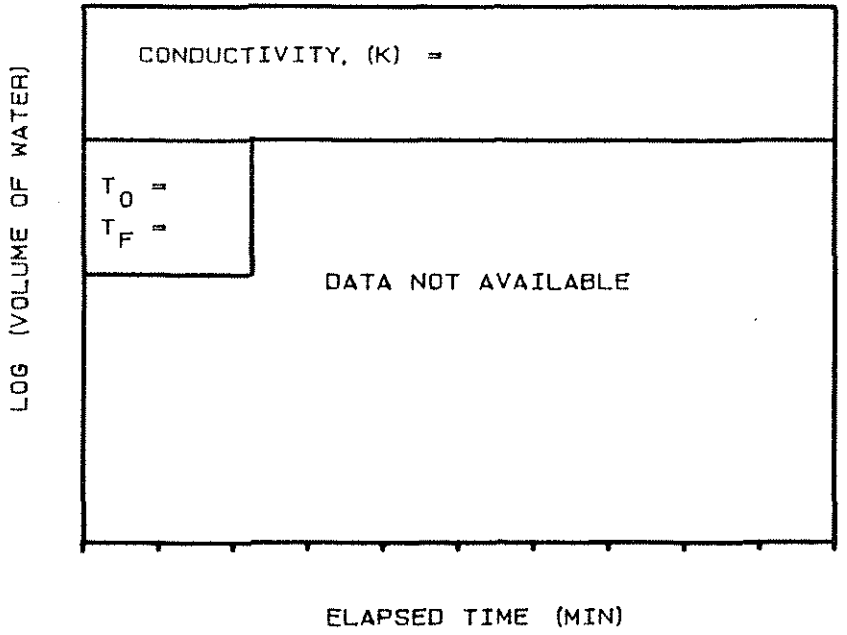

LOCATION... HC3-24

DATA NOT AVAILABLE

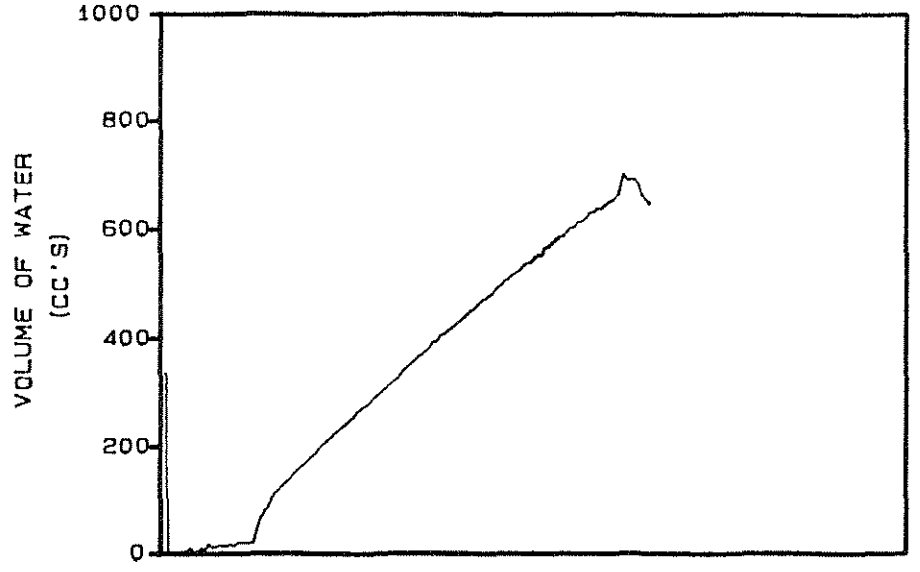

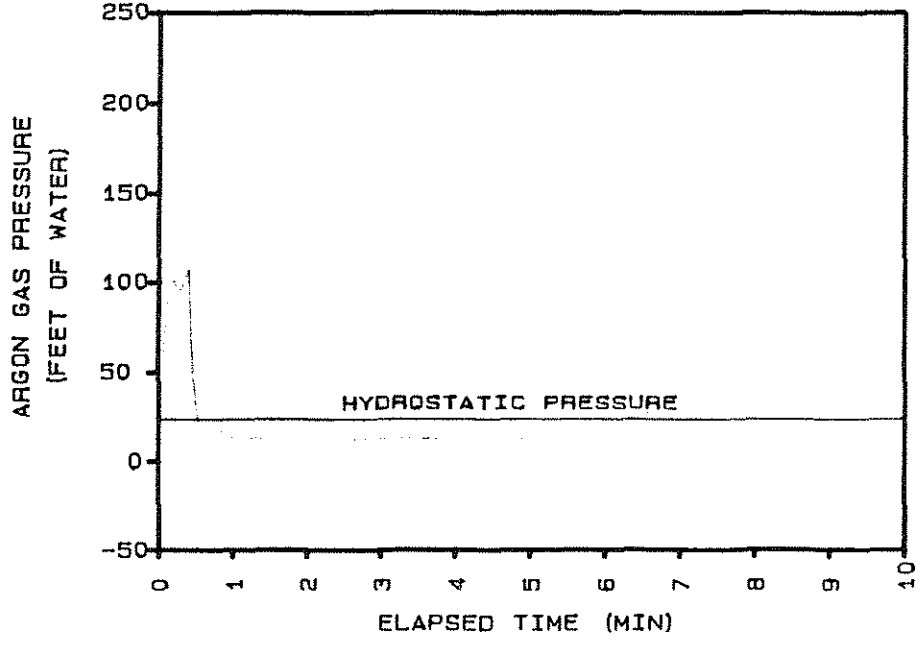

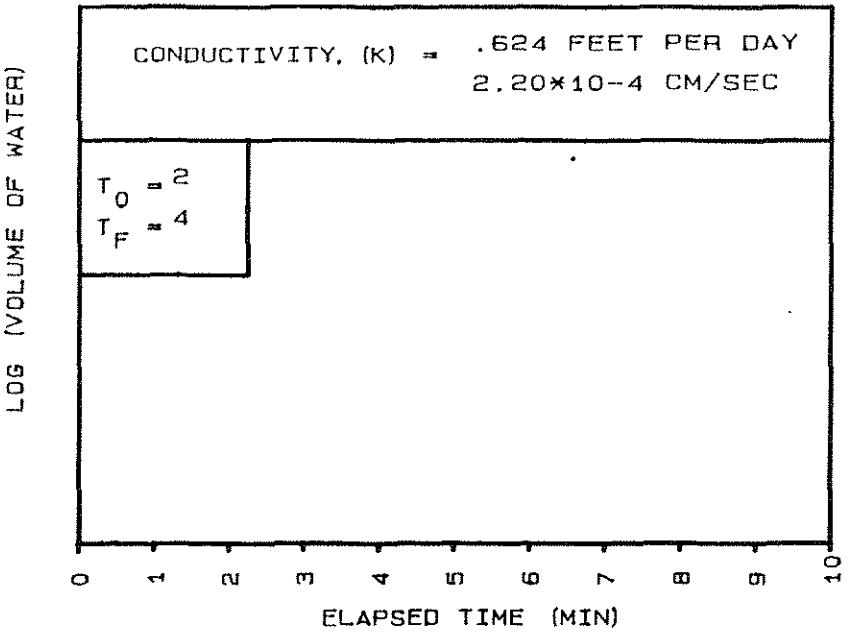

70144.01
LOCATION... HC5-29
TEST DATE
08/18/93 9:01:02

SAMPLE DEPTH (FT) 29
GROUNDWATER DEPTH (FT) 6

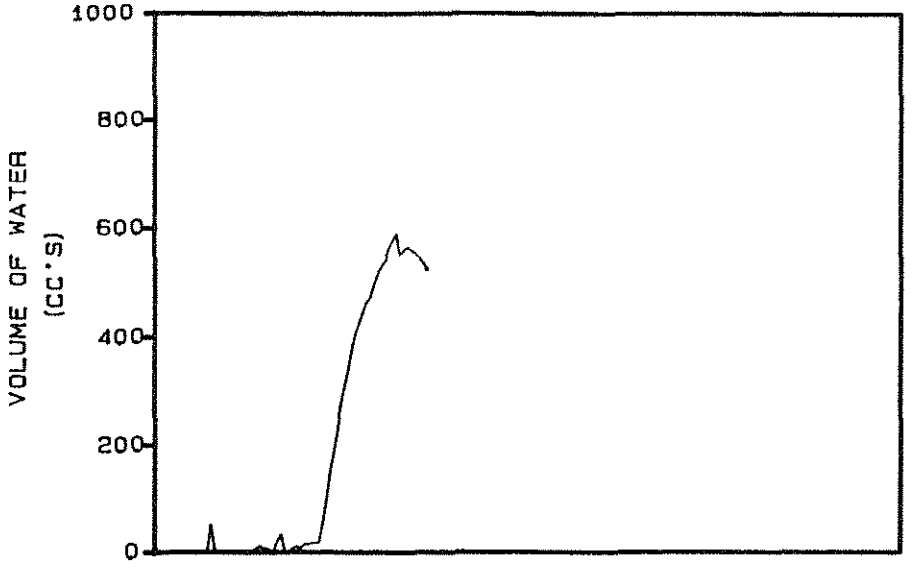

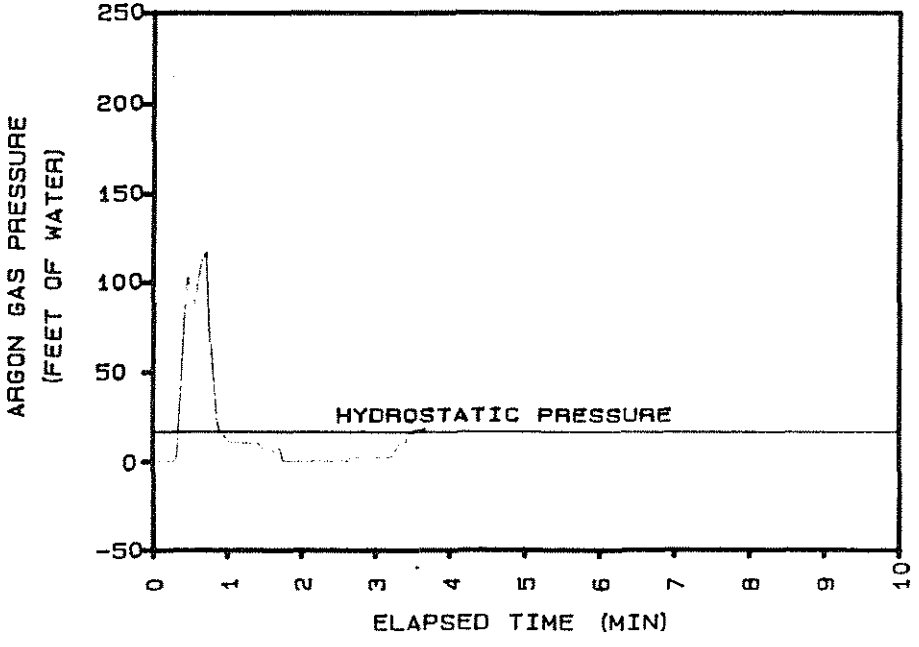

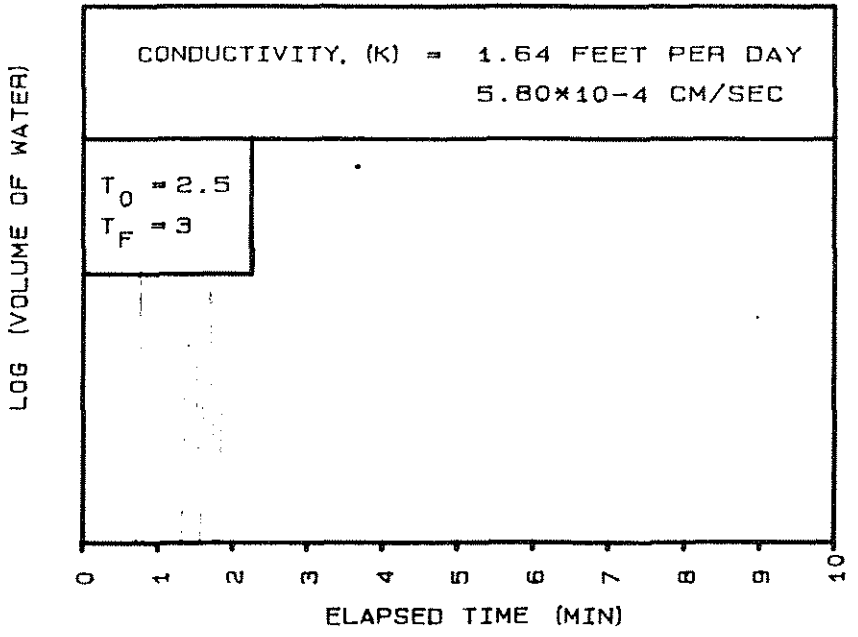

70144.01
LOCATION... HC6-24
TEST DATE
08/18/93 11:21:23

SAMPLE DEPTH (FT) 24
GROUNDWATER DEPTH (FT) 8

HYDROCONE TEST

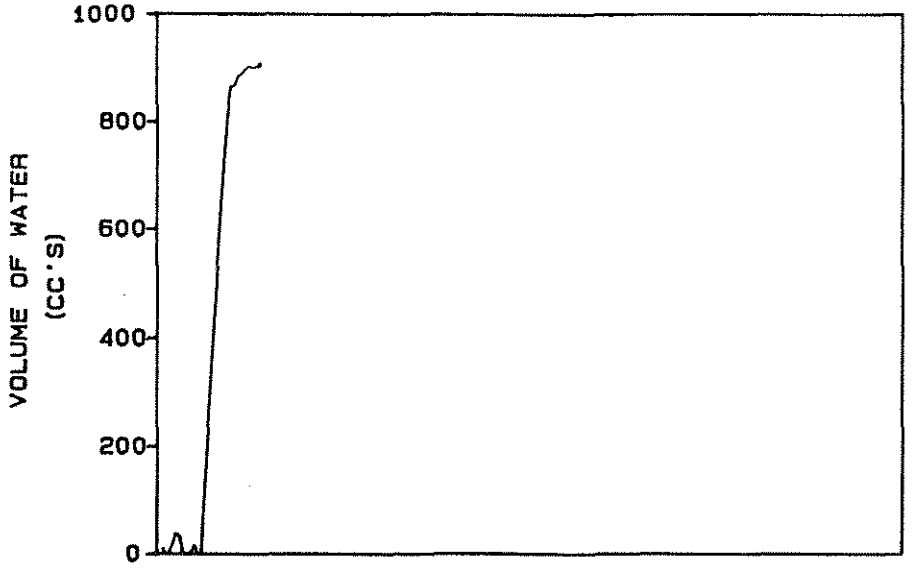

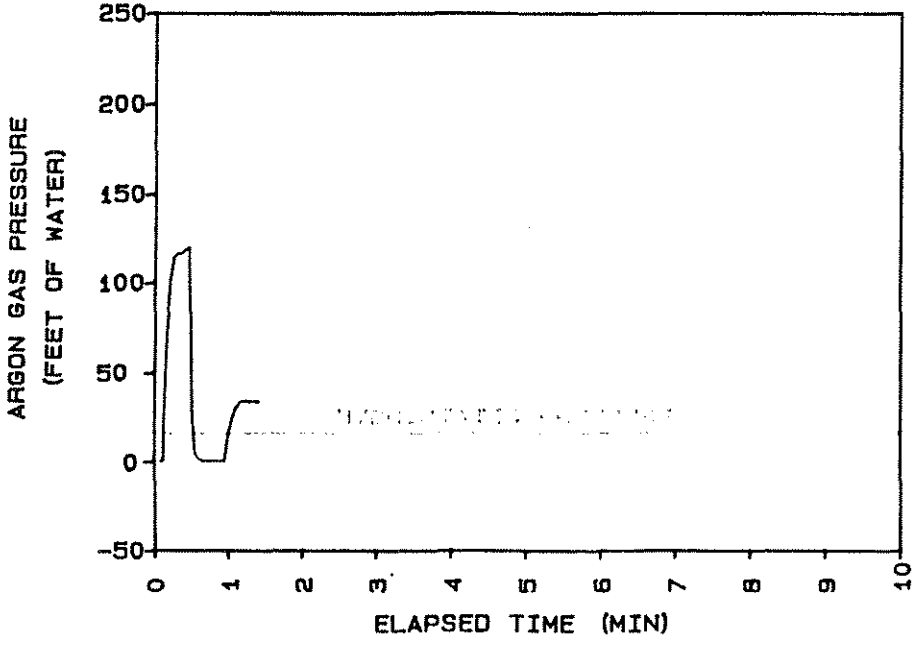

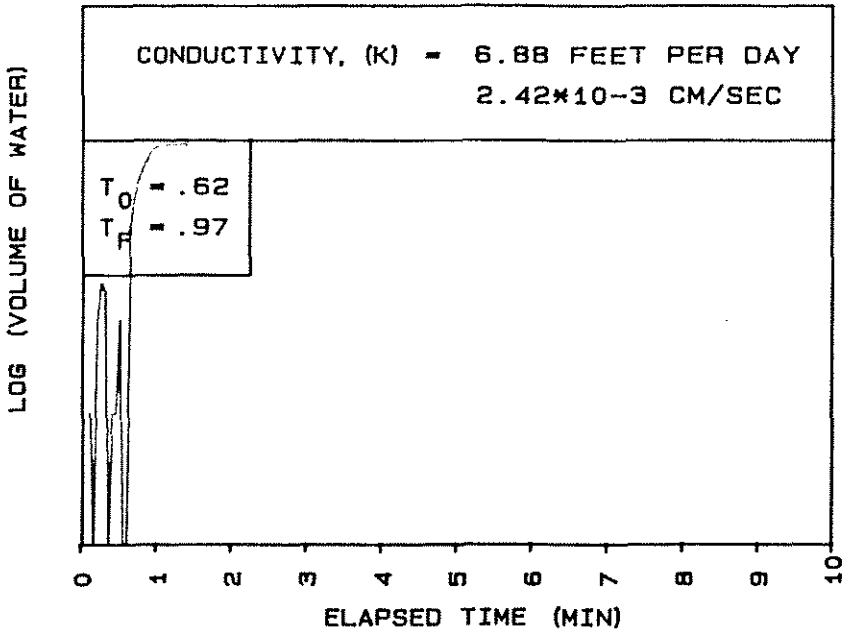

CONDUCTIVITY, (K) = 6.88 FEET PER DAY
2.42*10-3 CM/SEC

T_0 = .62
T_F = .97

70144.01
LOCATION... HC7-24
TEST DATE
08/18/93 12: 52: 41

SAMPLE DEPTH (FT) 24
GROUNDWATER DEPTH (FT) 8

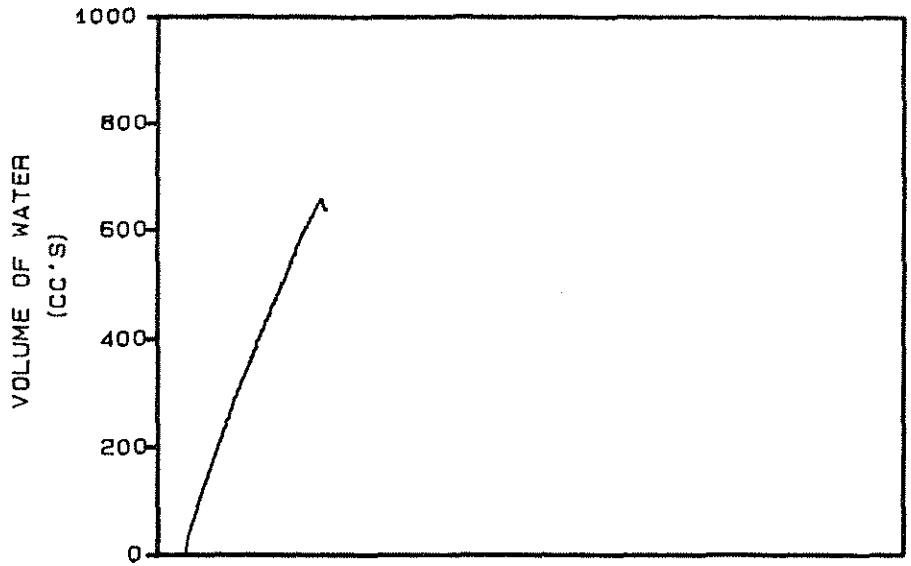

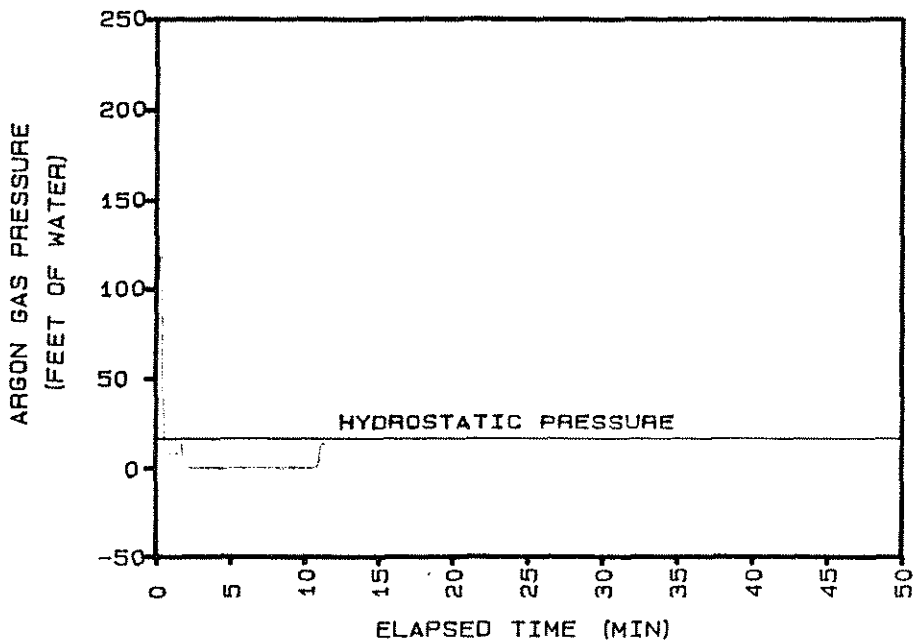

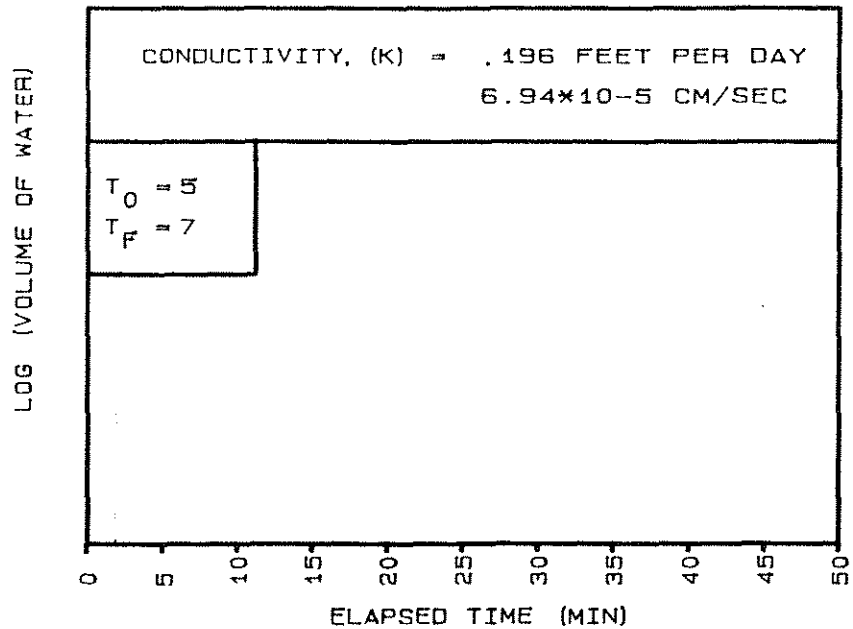

70144.01
LOCATION... HC8-24
TEST DATE
01/01/83 00: 26: 44

SAMPLE DEPTH (FT) 24
GROUNDWATER DEPTH (FT) 8

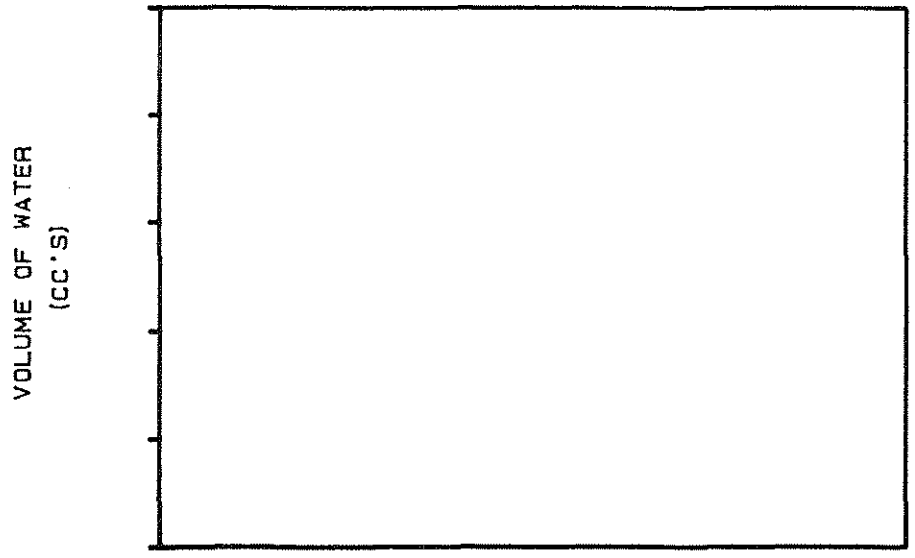

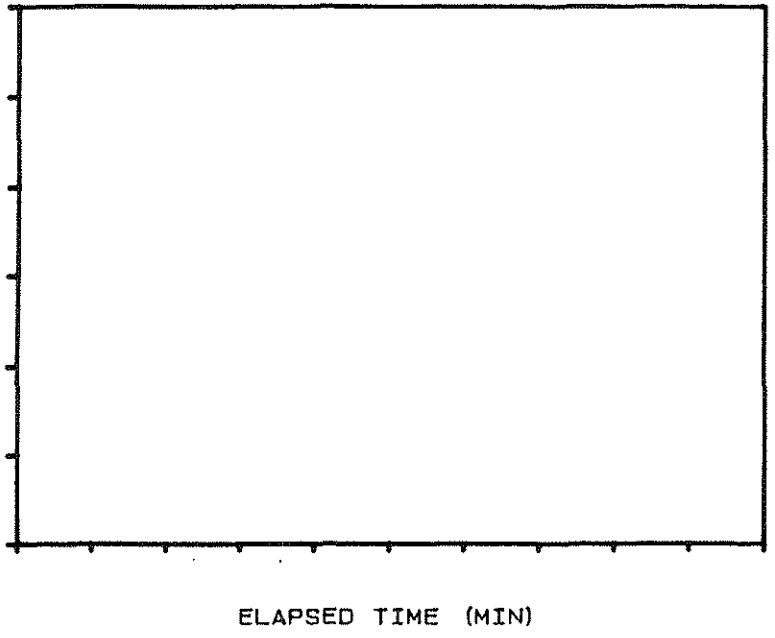

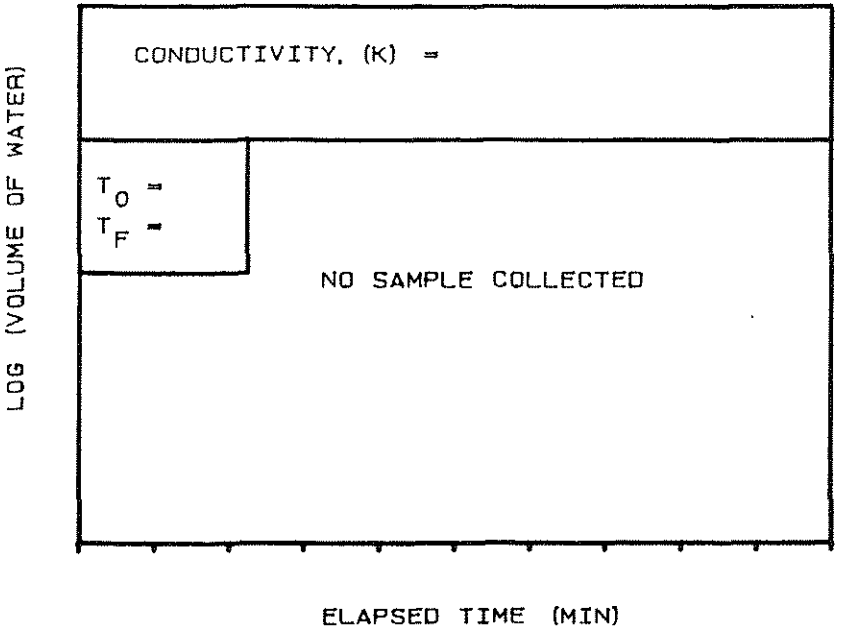

LOCATION... HCB-30

DATA NOT AVAILABLE

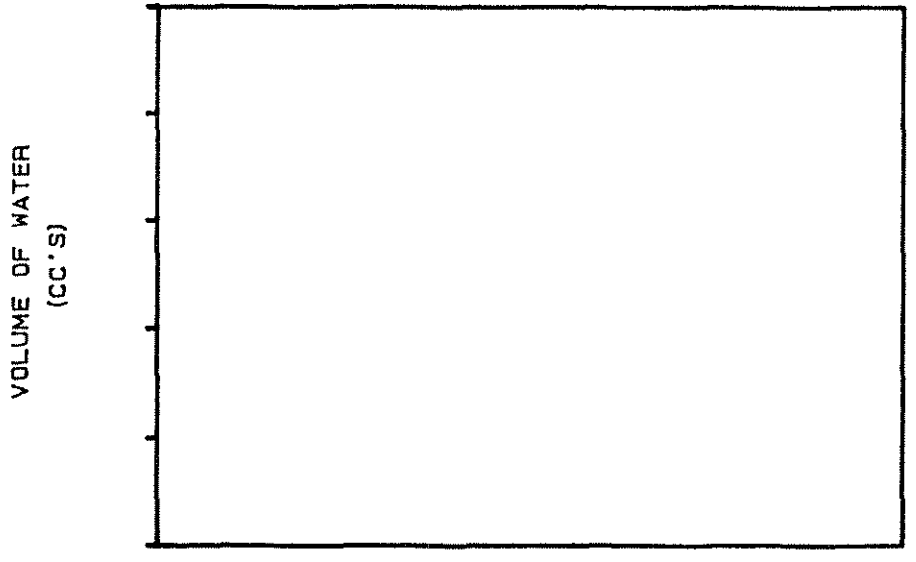

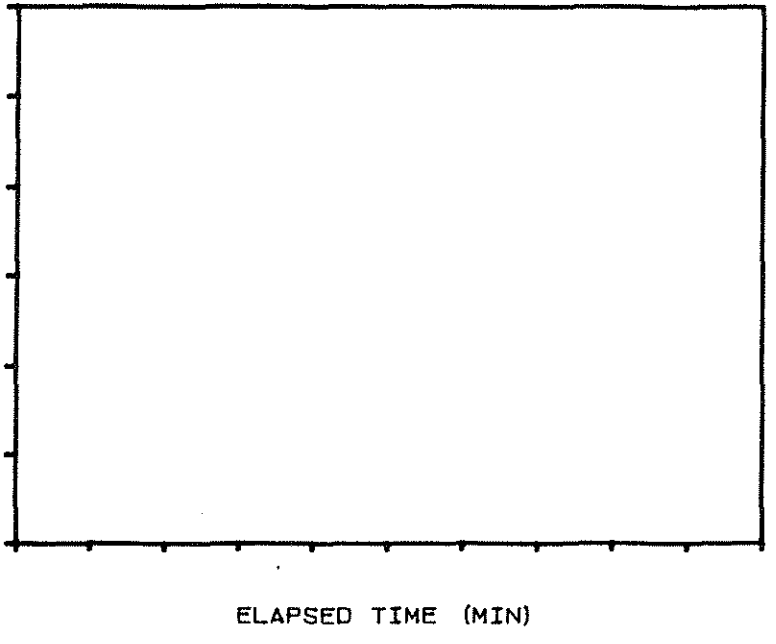

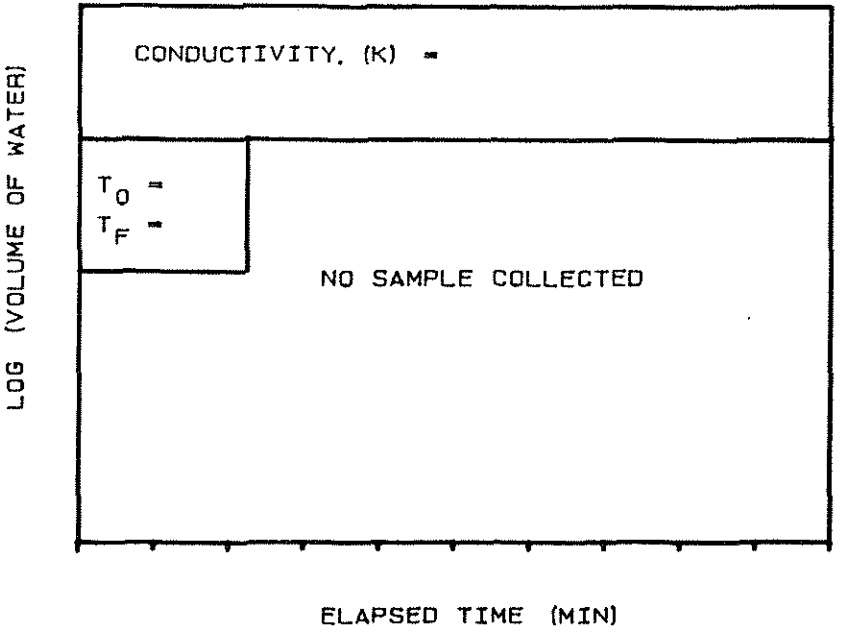

LOCATION... HC9-16

DATA NOT AVAILABLE

HYDROCONE TEST

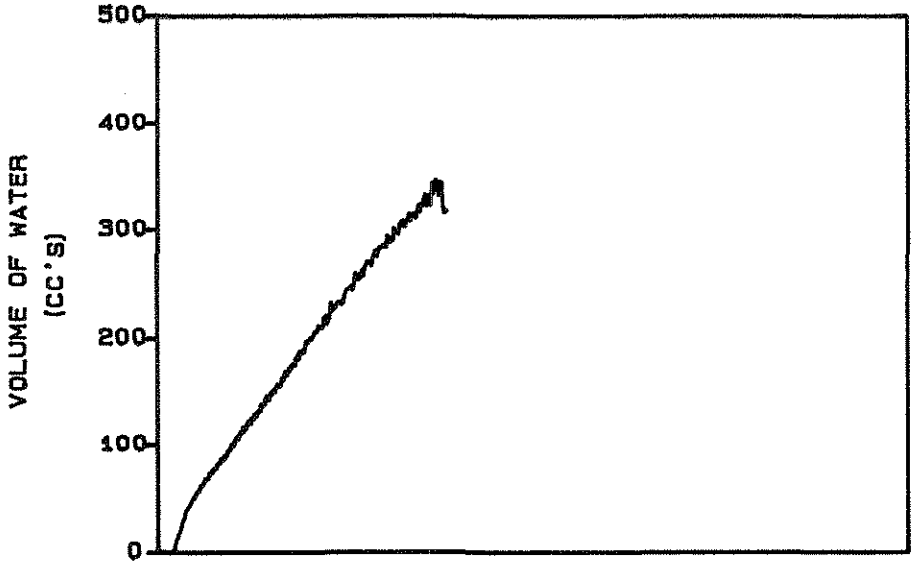

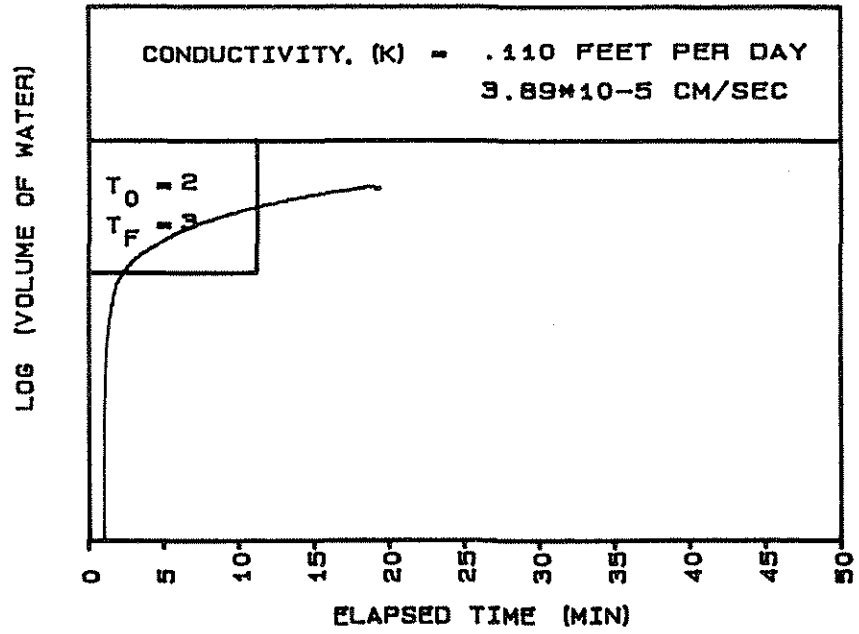

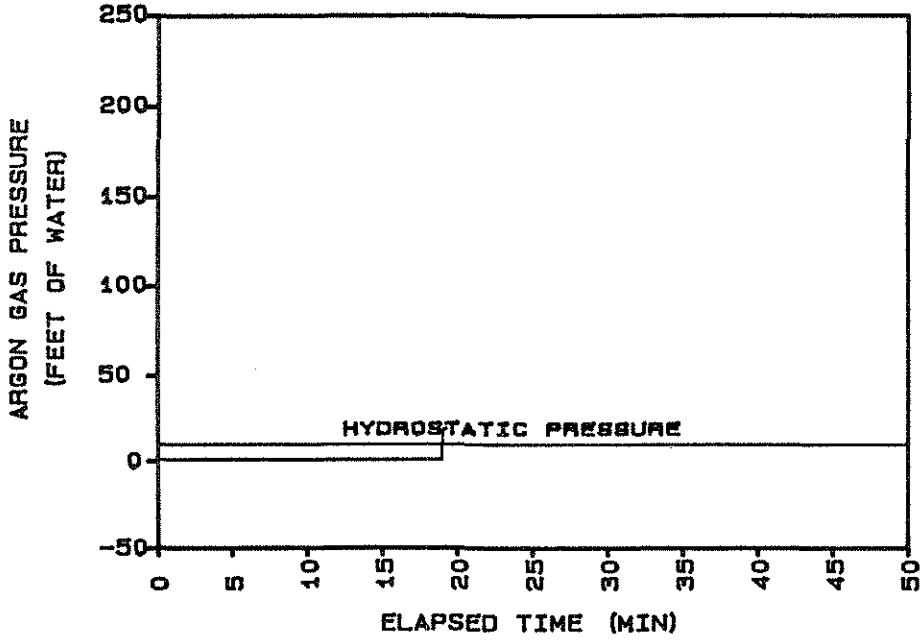

PROJECT# 70144.02
LOCATION... HC10-15
TEST DATE
07/19/94 15:58:19

SAMPLE DEPTH (FT) 14.5
GROUNDWATER DEPTH (FT) 6

HYDROCONE TEST

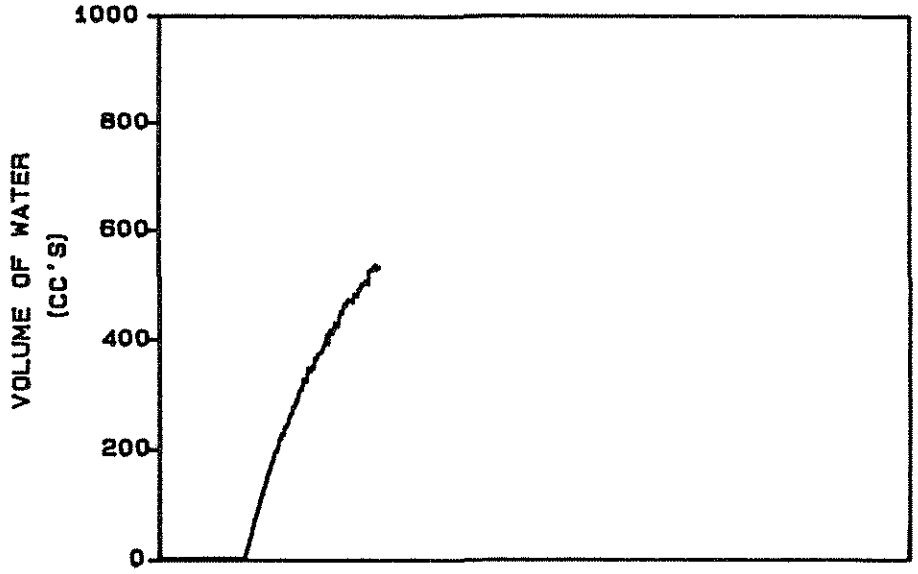

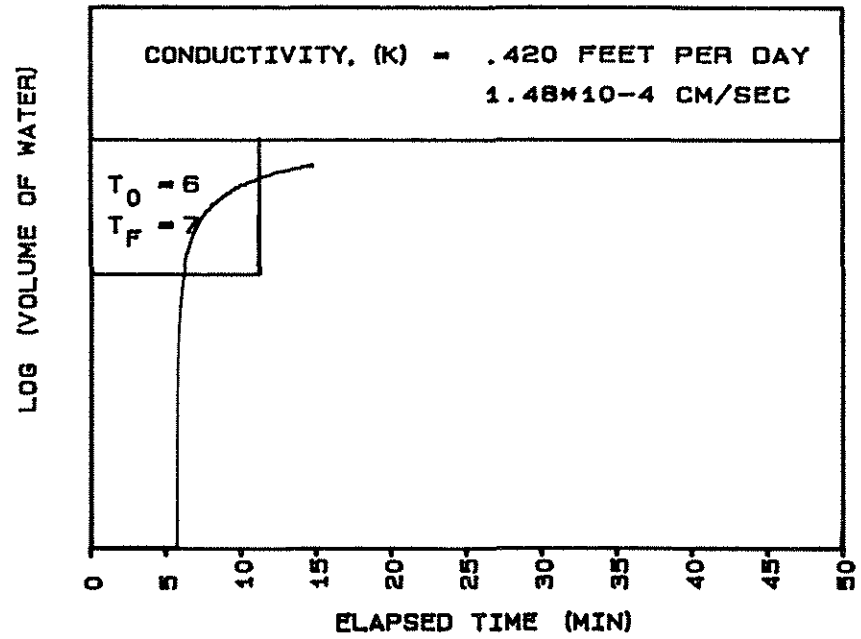

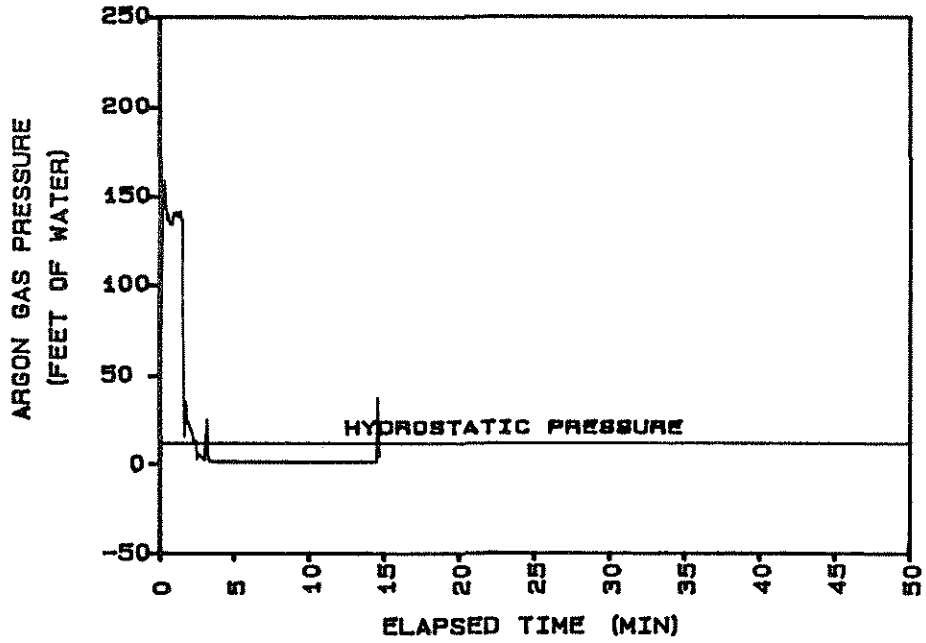

PROJECT# 70144.02
LOCATION... HC11-16
TEST DATE
07/19/94 14: 02: 23

SAMPLE DEPTH (FT) 16
GROUNDWATER DEPTH (FT) 6

HYDROCONE TEST

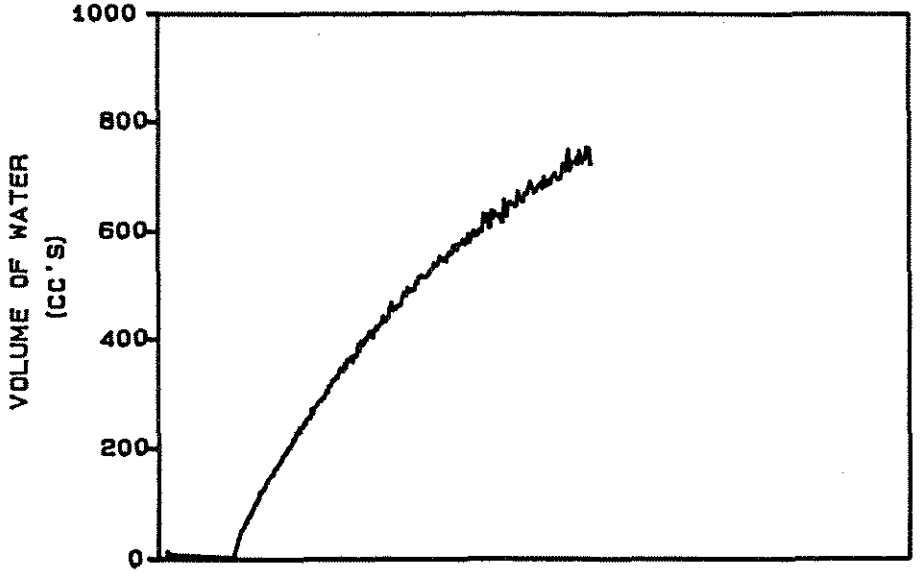

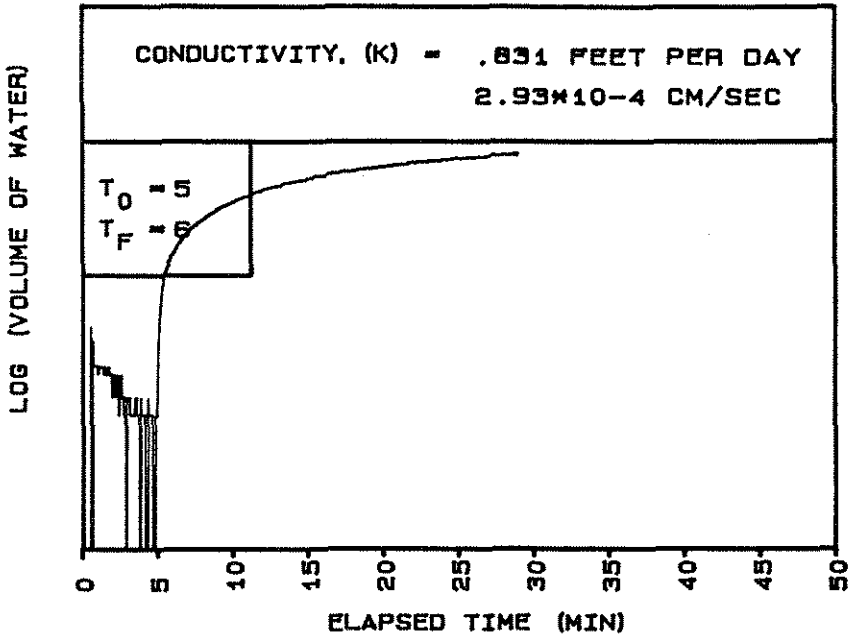

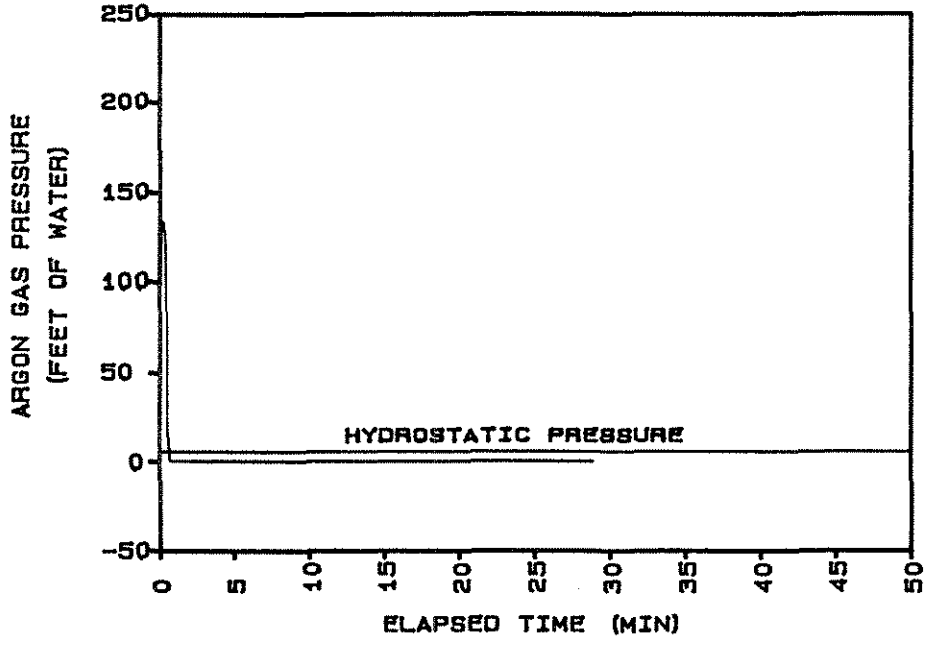

PROJECT# 70144.02
LOCATION... HC12-13
TEST DATE
07/19/94 12: 32: 40

SAMPLE DEPTH (FT) 12.5
GROUNDWATER DEPTH (FT) 8

HYDROCONE TEST

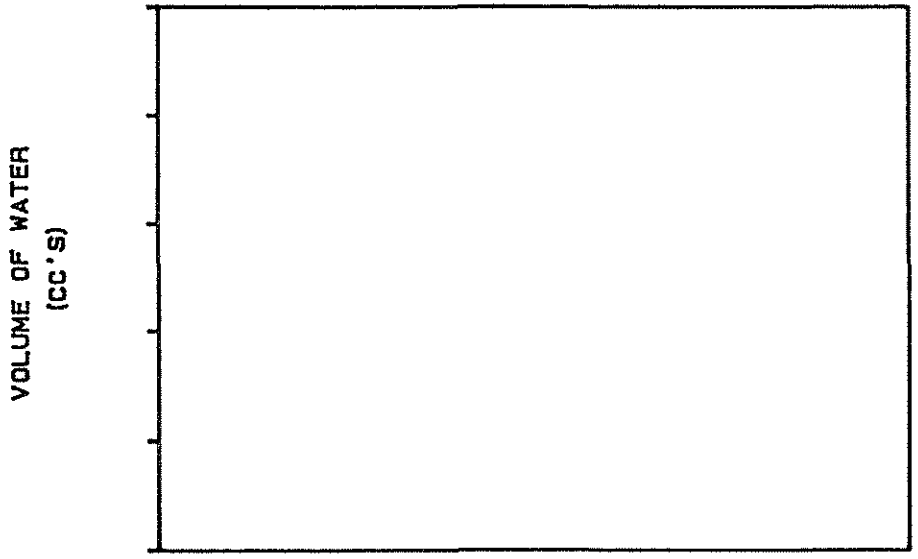

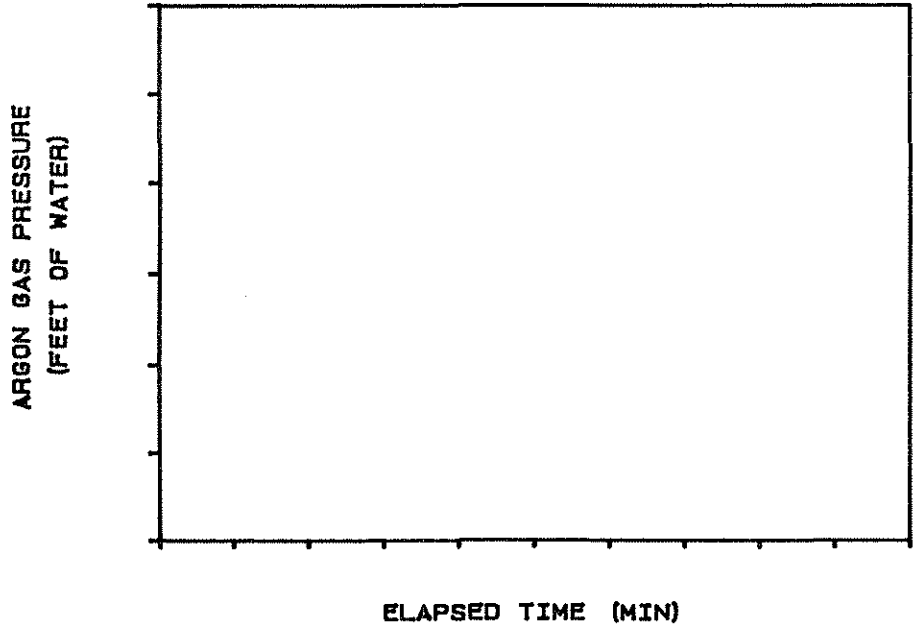

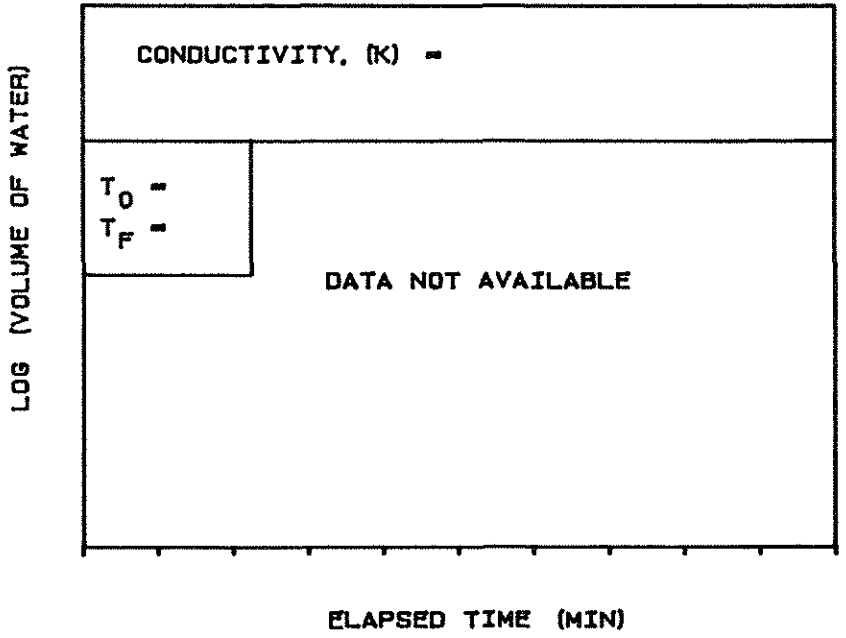

PROJECT# 70144.02
LOCATION... H13-13

DATA NOT AVAILABLE

HYDROCONE TEST

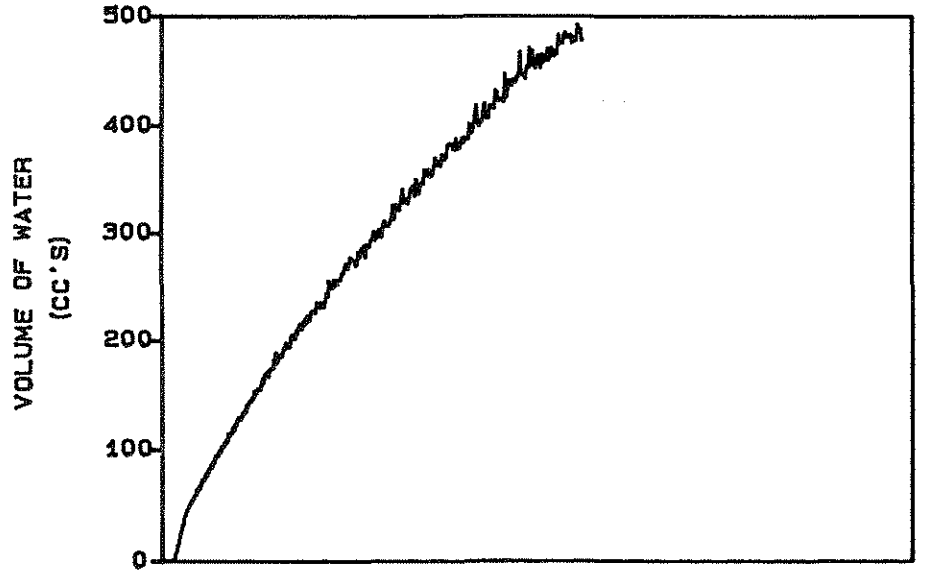

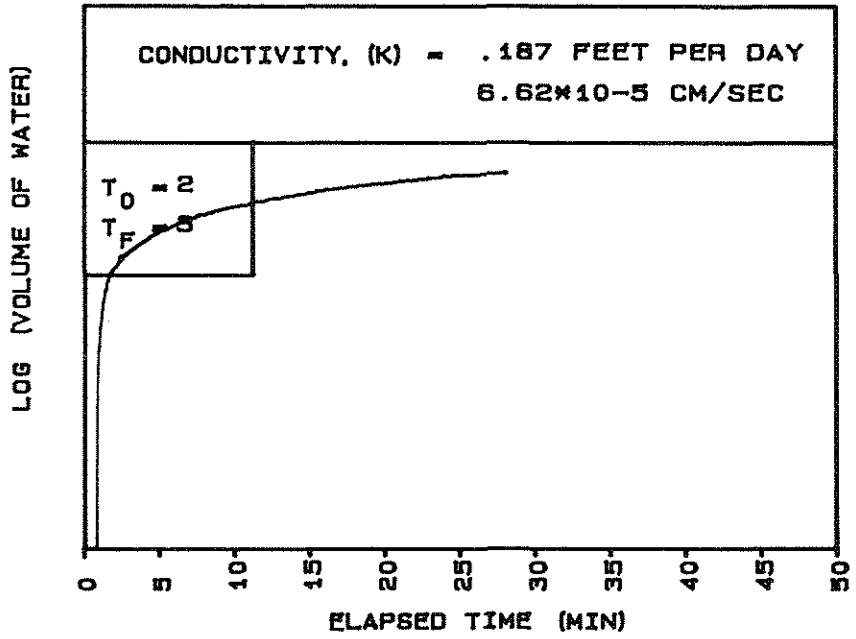

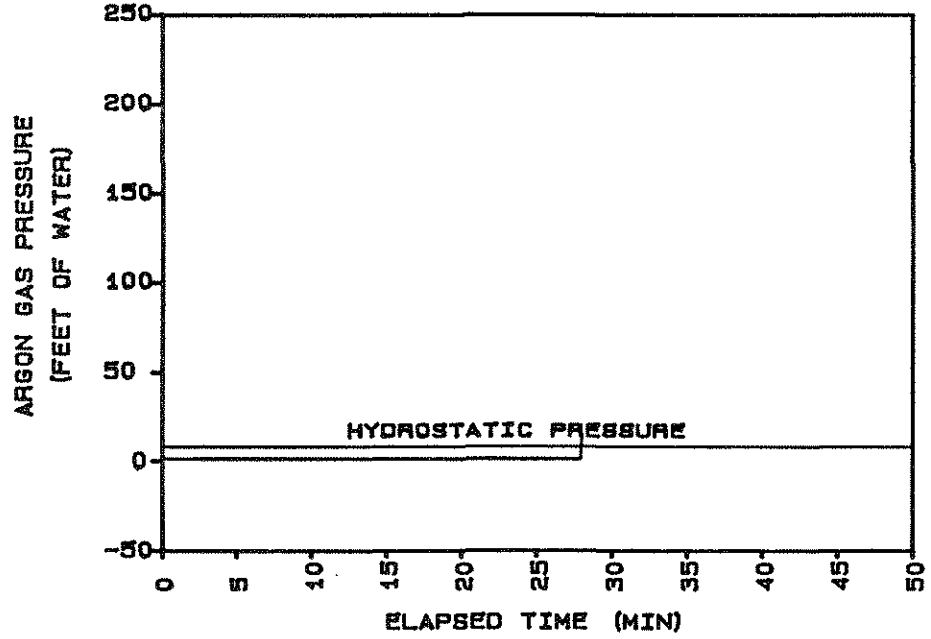

PROJECT# 70144.02
LOCATION... H14-13
TEST DATE
07/20/94 09: 12: 01

SAMPLE DEPTH (FT) 12.5
GROUNDWATER DEPTH (FT) 6

HYDROCONE TEST

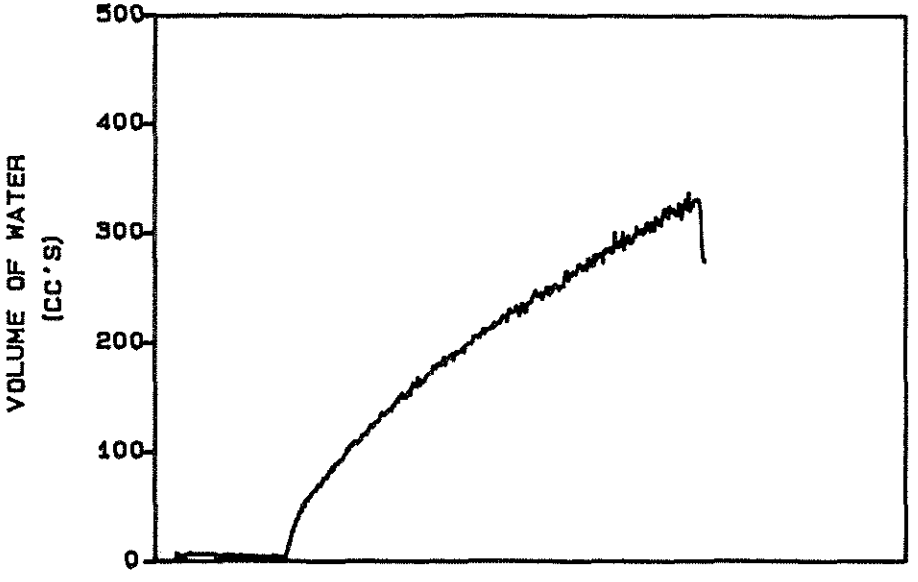

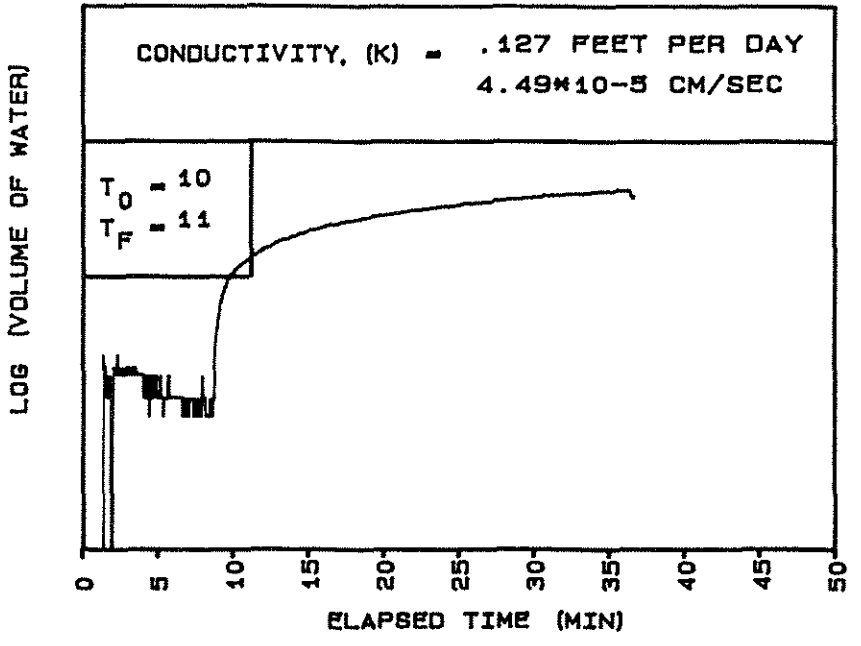

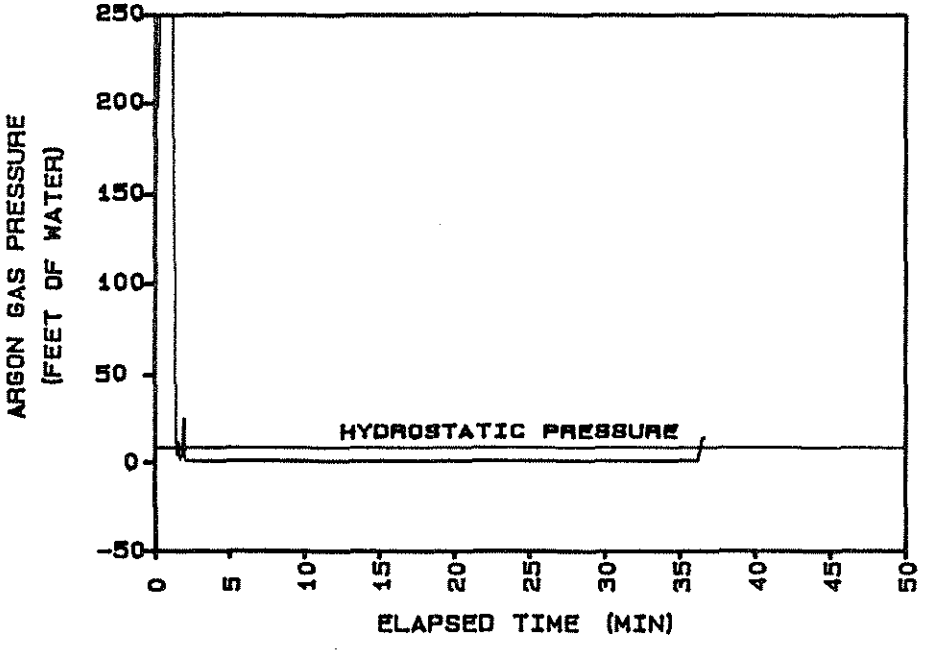

PROJECT# 70144.02
LOCATION... H15-13
TEST DATE
07/20/94 16:30:28

SAMPLE DEPTH (FT) 13
GROUNDWATER DEPTH (FT) 6

HYDROCONE TEST

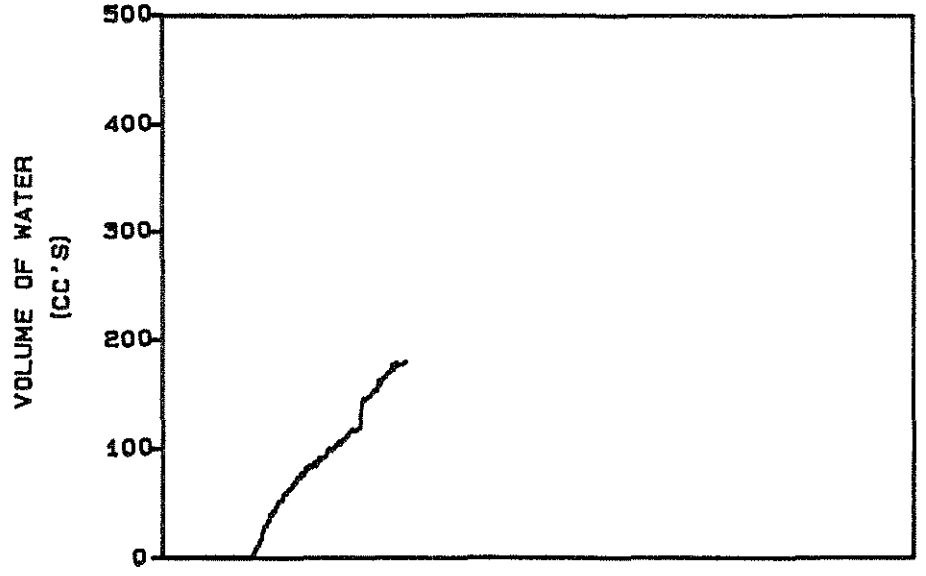

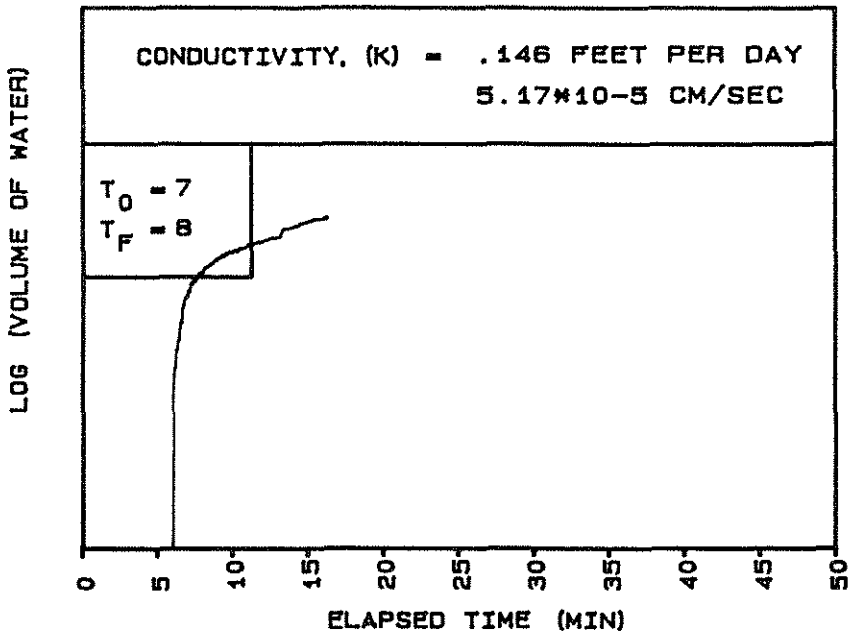

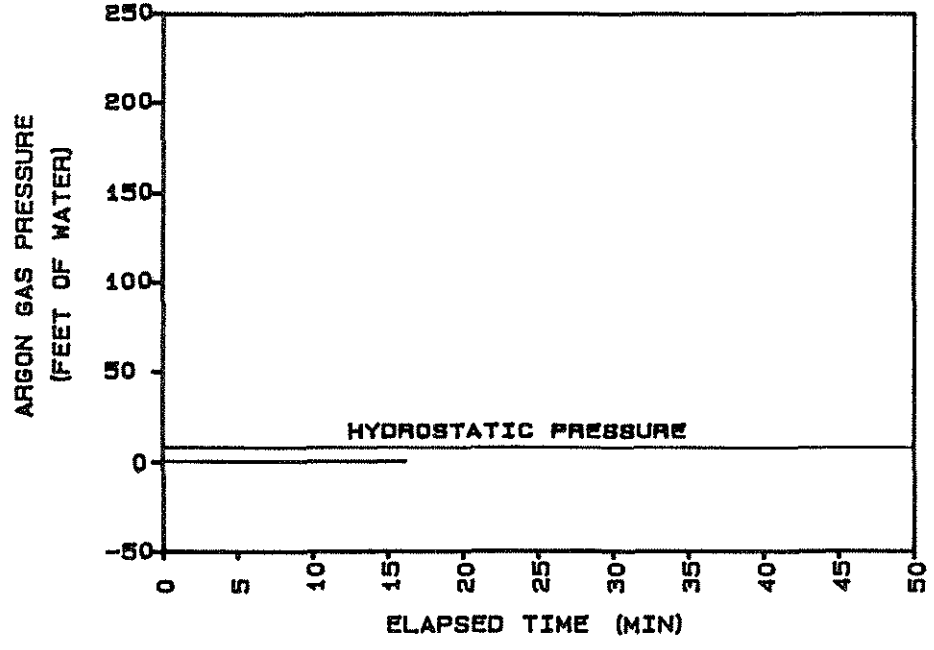

PROJECT# 70144.02
LOCATION... H16-13
TEST DATE
07/20/94 18: 10: 52

SAMPLE DEPTH (FT) 13
GROUNDWATER DEPTH (FT) 6

HYDROCONE TEST

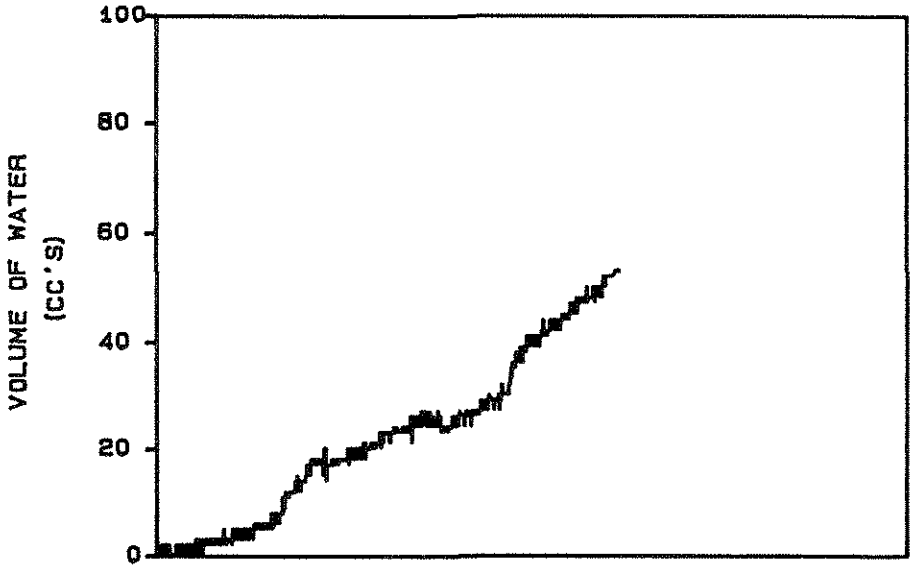

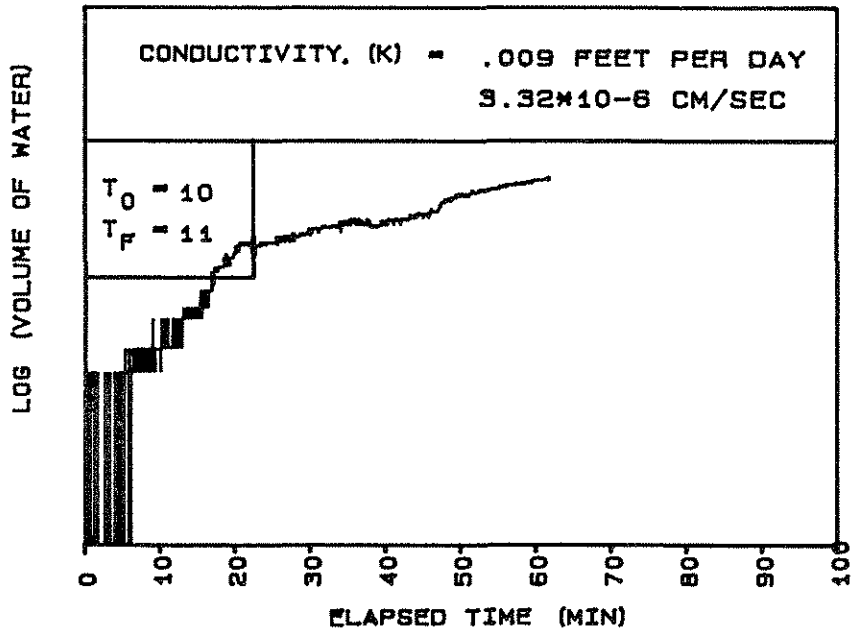

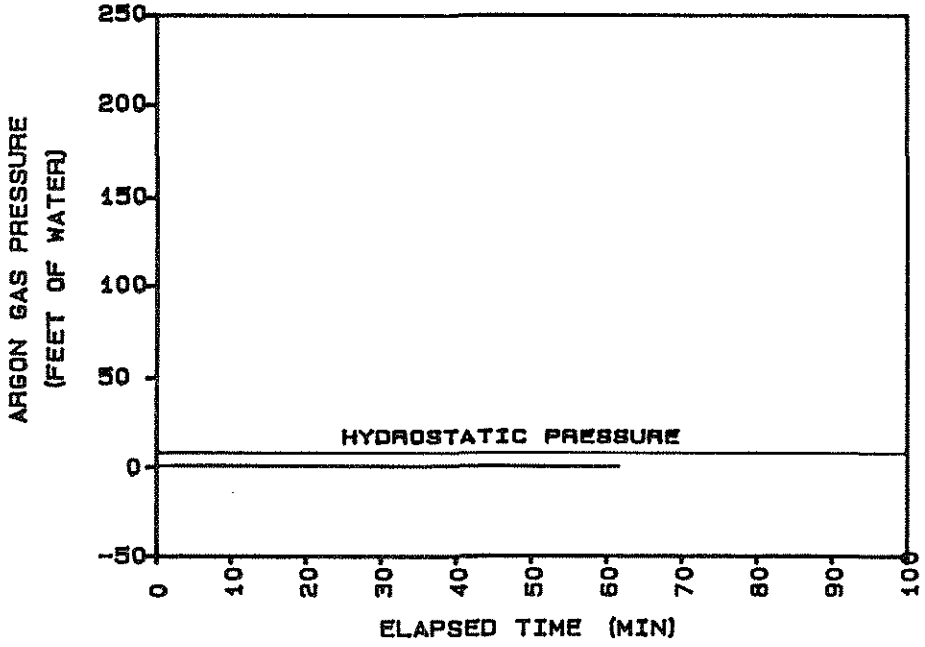

PROJECT# 70144.02
LOCATION... H17-13
TEST DATE
07/21/94 10:38:23

SAMPLE DEPTH (FT) 13
GROUNDWATER DEPTH (FT) 6

HYDROCONE TEST

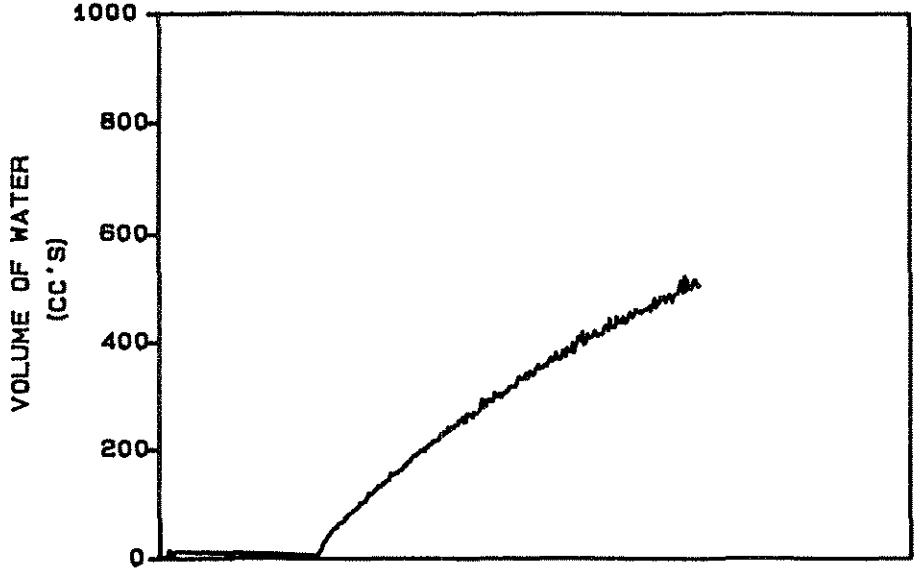

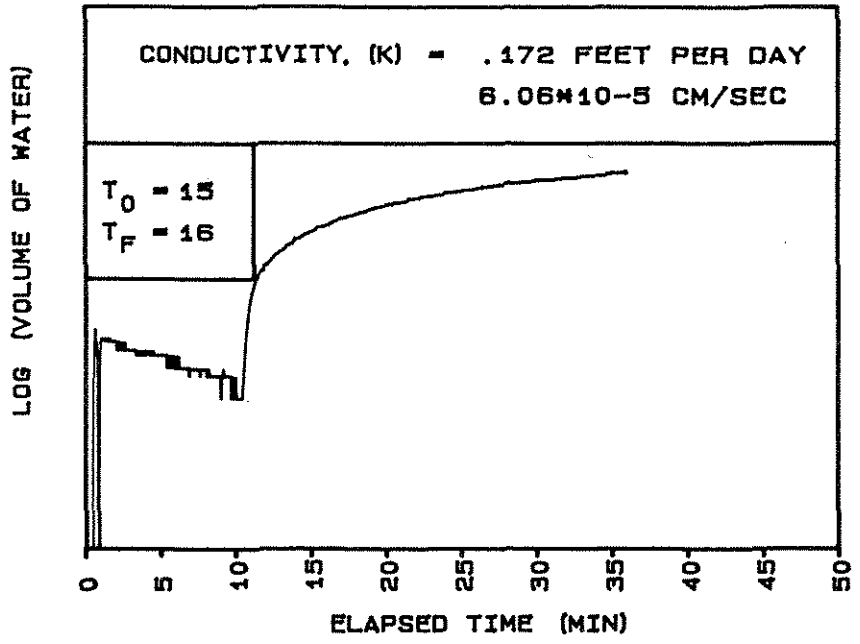

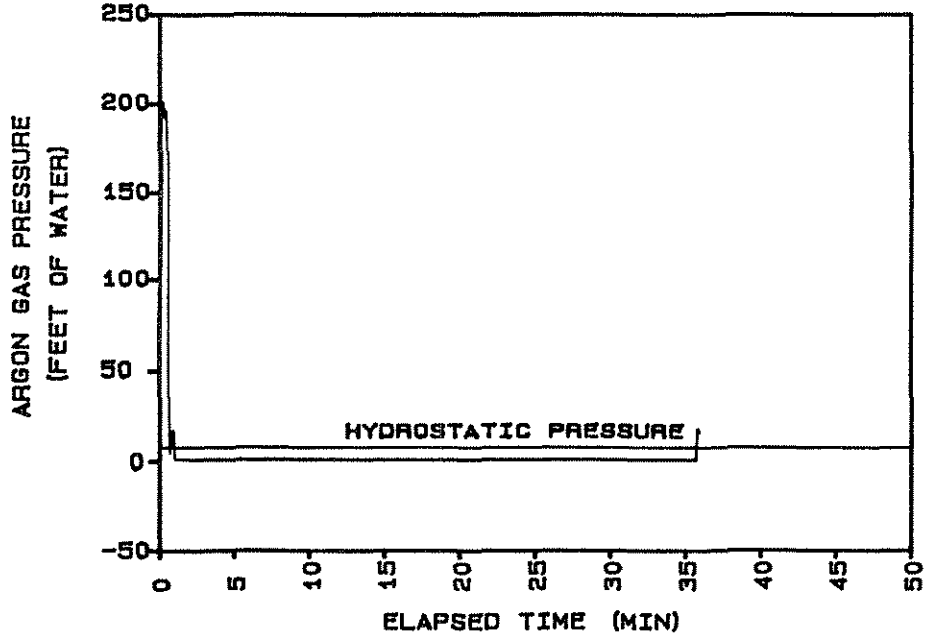

PROJECT# 70144.02
LOCATION... H18-13
TEST DATE
07/21/94 13: 14: 17

SAMPLE DEPTH (FT) 12.5
GROUNDWATER DEPTH (FT) 8

APPENDIX F

WELL CONSTRUCTION DIAGRAMS

BAIN, PALMER & ASSOCIATES, INC.

MONITORING WELL INSTALLATION SKETCH

Project J.L. de Ball Girmes
Surveyed by Bain, Palmer & Assoc.
Surveyed from Arbitary 100 ft.
Elevation of ground surface 98.72 ft.
Elevation of top of well pipe 98.34 ft.

Well Number MW-4
Constructed on 02/03/93
Depth to water measured from top of well pipe 60.00 ft.
Water level elevation 38.34 ft.
Water level taken on 02/12/93

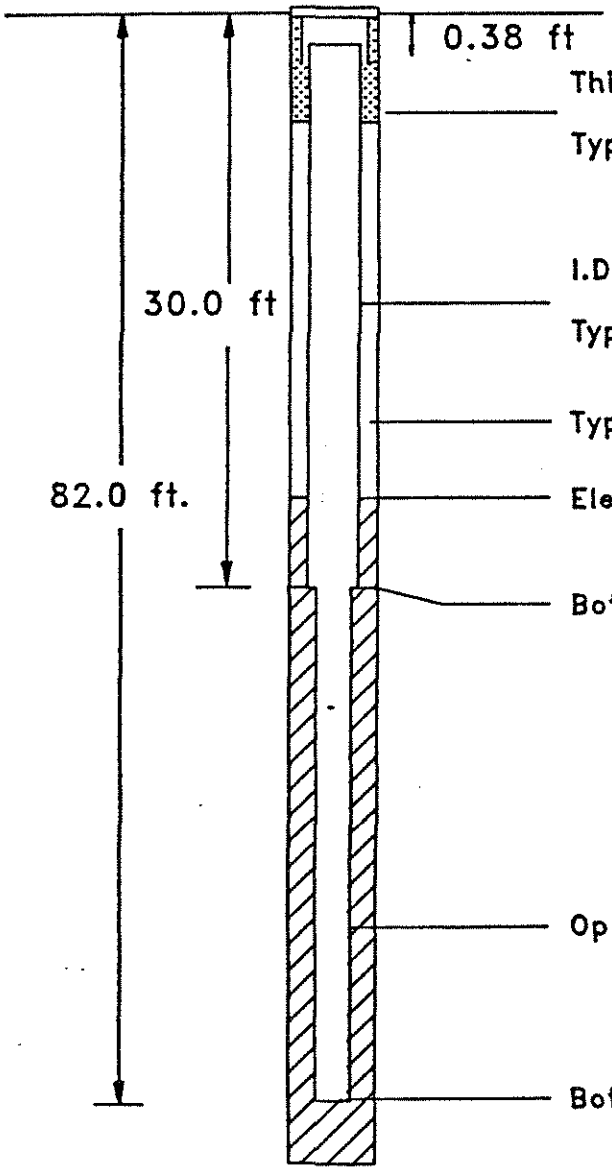

Thickness of surface seal 1.0 ft.
Type of surface seal cement

I.D. of riser pipe 6 1/4 in.
Type of riser pipe PVC

Type of backfill cement/bentonite grout

Elevation of top of rock 74.72 ft.

Bottom elevation of casing 68.72 ft.

Open hole diameter 5 7/8 in.

Bottom elevation of well 16.72 ft.

BAIN, PALMER & ASSOCIATES, INC.

MONITORING WELL INSTALLATION SKETCH

Project J.L. de Ball Girmes
Surveyed by Bain, Palmer & Assoc.
Surveyed from Arbitary 100 ft.
Elevation of ground surface 97.45 ft.
Elevation of top of well pipe 97.38 ft.

Well Number MW-5
Constructed on 02/03/93
Depth to water measured from top of well pipe 62.75 ft.
Water level elevation 34.63 ft.
Water level taken on 02/12/93

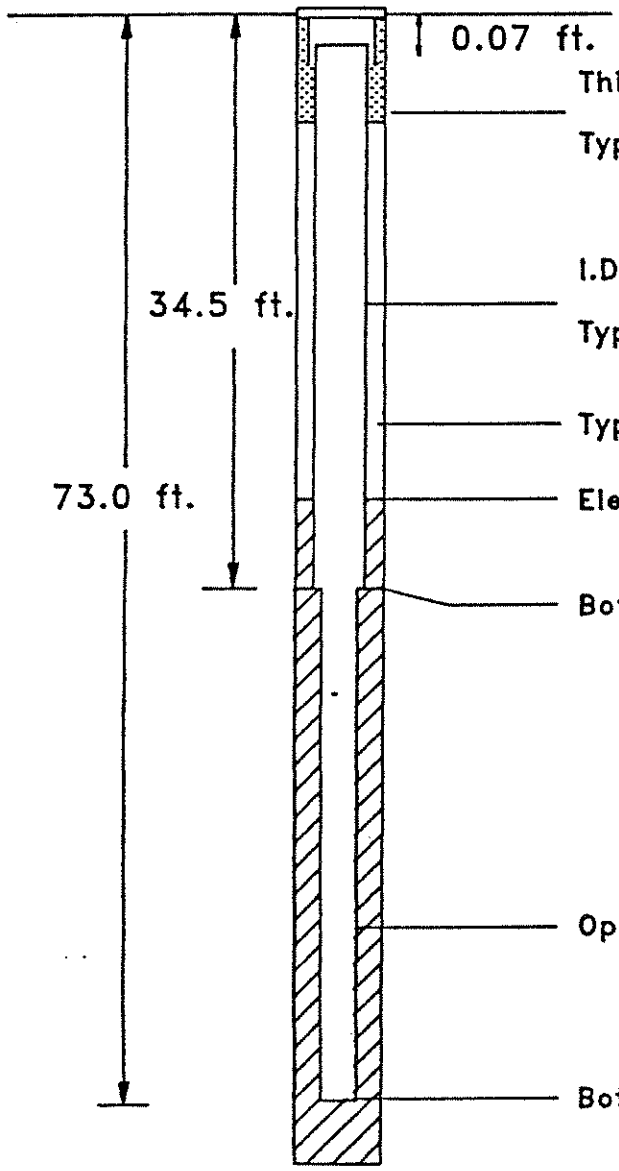

Thickness of surface seal 1.0 ft.
Type of surface seal cement

I.D. of riser pipe 6 1/4 in.
Type of riser pipe PVC

Type of backfill cement/bentonite grout

Elevation of top of rock 69.45 ft.

Bottom elevation of casing 62.95 ft.

Open hole diameter 5 7/8 in.

Bottom elevation of well 24.45 ft.

BAIN, PALMER & ASSOCIATES, INC.

MONITORING WELL INSTALLATION SKETCH*

Project J.L. de Ball Girmes
Surveyed by Bain, Palmer & Assoc.
Surveyed from Arbitary 100 ft.
Elevation of concrete pad reference 75.97 ft.
Elevation of top of well pipe 78.37 ft.

Well Number MW-6
Constructed on 02/09/93
Depth to water measured from top of well pipe 43.10 ft.
Water level elevation 35.27 ft.
Water level taken on 02/12/93

* NOTE: Drawing not to scale.

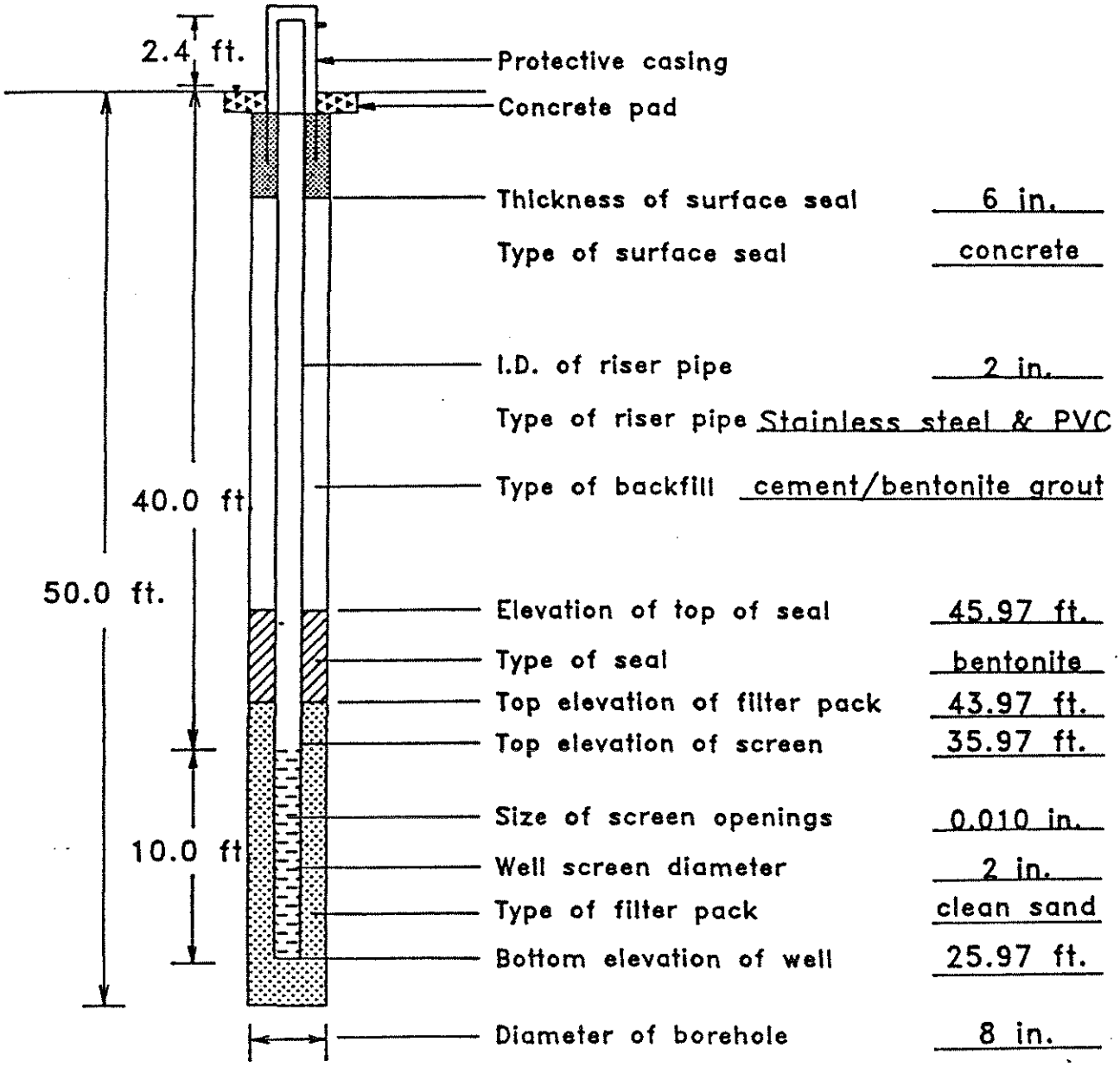

BAIN, PALMER & ASSOCIATES, INC.

MONITORING WELL INSTALLATION SKETCH*

Project J.L. de Ball Girmes
Surveyed by Bain, Palmer & Assoc.
Surveyed from Arbitary 100 ft.
Elevation of concrete pad reference 44.07 ft.
Elevation of top of well pipe 47.31 ft.

Well Number MW-7
Constructed on 02/09/93
Depth to water measured from top of well pipe 18.32 ft.
Water level elevation 28.99 ft.
Water level taken on 02/12/93

* NOTE: Drawing not to scale.

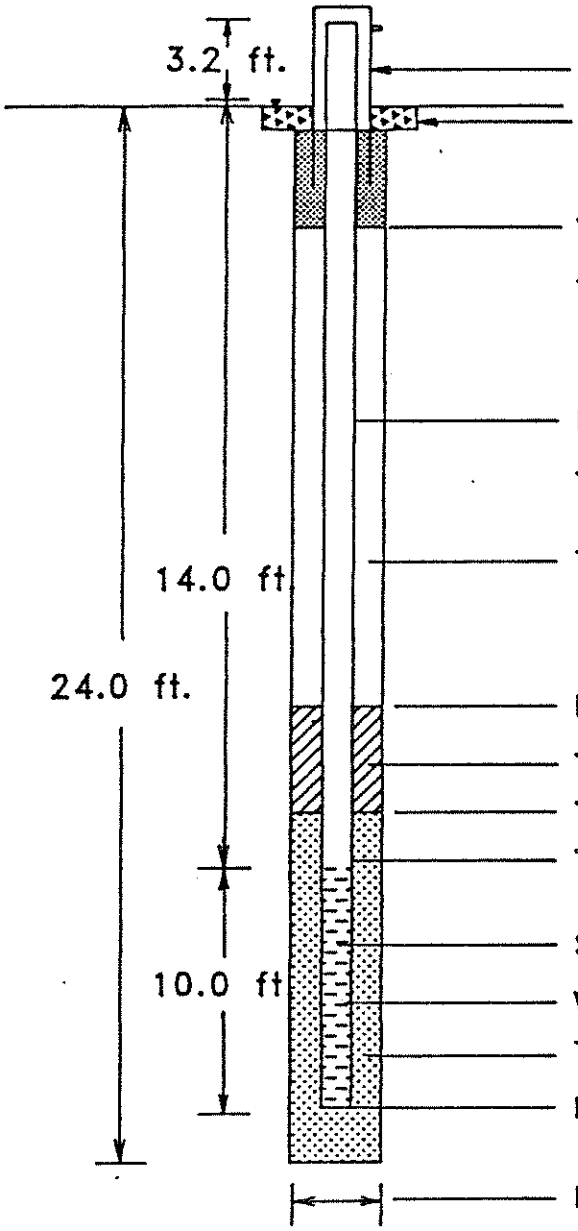

Protective casing	
Concrete pad	
Thickness of surface seal	6 in.
Type of surface seal	concrete
I.D. of riser pipe	2 in.
Type of riser pipe	Stainless steel & PVC
Type of backfill	cement/bentonite grout
Elevation of top of seal	34.07 ft.
Type of seal	bentonite
Top elevation of filter pack	32.07 ft.
Top elevation of screen	30.07 ft.
Size of screen openings	0.010 in.
Well screen diameter	2 in.
Type of filter pack	clean sand
Bottom elevation of well	20.07 ft.
Diameter of borehole	8 in.

BAIN, PALMER & ASSOCIATES, INC.

MONITORING WELL INSTALLATION SKETCH*

Project J.L. de Ball Girmes
Surveyed by Bain, Palmer & Assoc.
Surveyed from Arbitary 100 ft.
Elevation of concrete pad reference 49.48 ft.
Elevation of top of well pipe 51.37 ft.

Well Number MW-8
Constructed on 02/11/93
Depth to water measured from top of well pipe 22.74 ft.
Water level elevation 28.63 ft.
Water level taken on 02/12/93

* NOTE: Drawing not to scale.

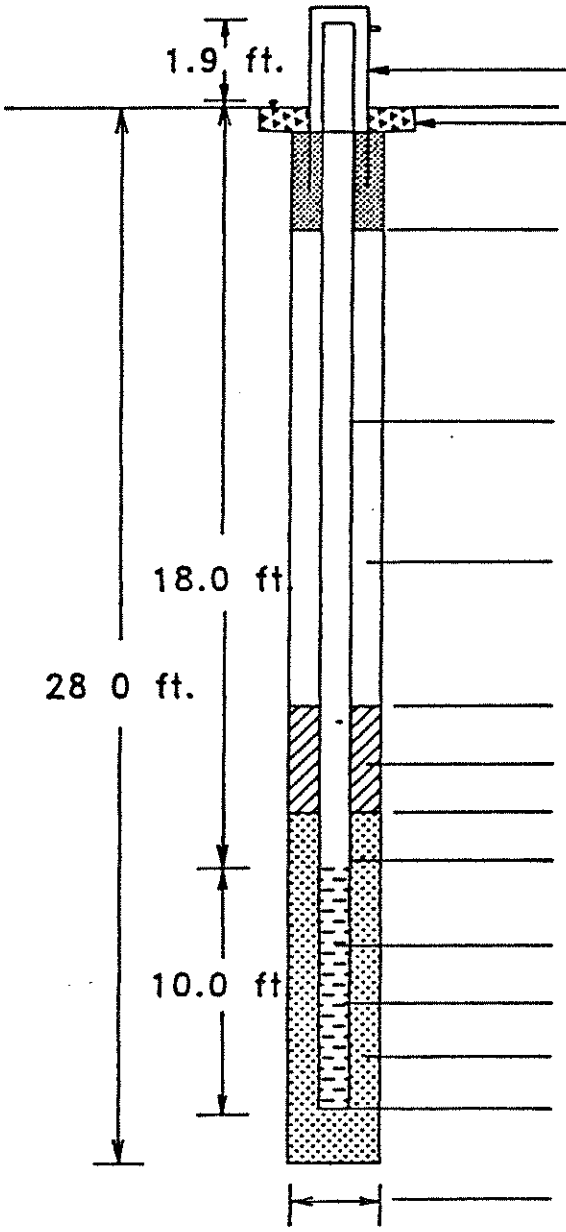

Protective casing
Concrete pad

Thickness of surface seal	6 in.
Type of surface seal	concrete
I.D. of riser pipe	2 in.
Type of riser pipe	Stainless steel & PVC
Type of backfill	cement/bentonite grout
Elevation of top of seal	34.98 ft.
Type of seal	bentonite
Top elevation of filter pack	33.48 ft.
Top elevation of screen	31.48 ft.
Size of screen openings	0.010 in.
Well screen diameter	2 in.
Type of filter pack	clean sand
Bottom elevation of well	21.48 ft.
Diameter of borehole	8 in.

BAIN, PALMER & ASSOCIATES, INC.

MONITORING WELL INSTALLATION SKETCH*

Project J.L. de Ball Girmes
Surveyed by Bain, Palmer & Assoc.
Surveyed from Arbitary 100 ft.
Elevation of concrete pad reference 45.81 ft.
Elevation of top of well pipe 48.43 ft.

Well Number MW-9
Constructed on 02/11/93
Depth to water measured from top of well pipe 20.70 ft.
Water level elevation 27.73 ft.
Water level taken on 02/12/93

* NOTE: Drawing not to scale.

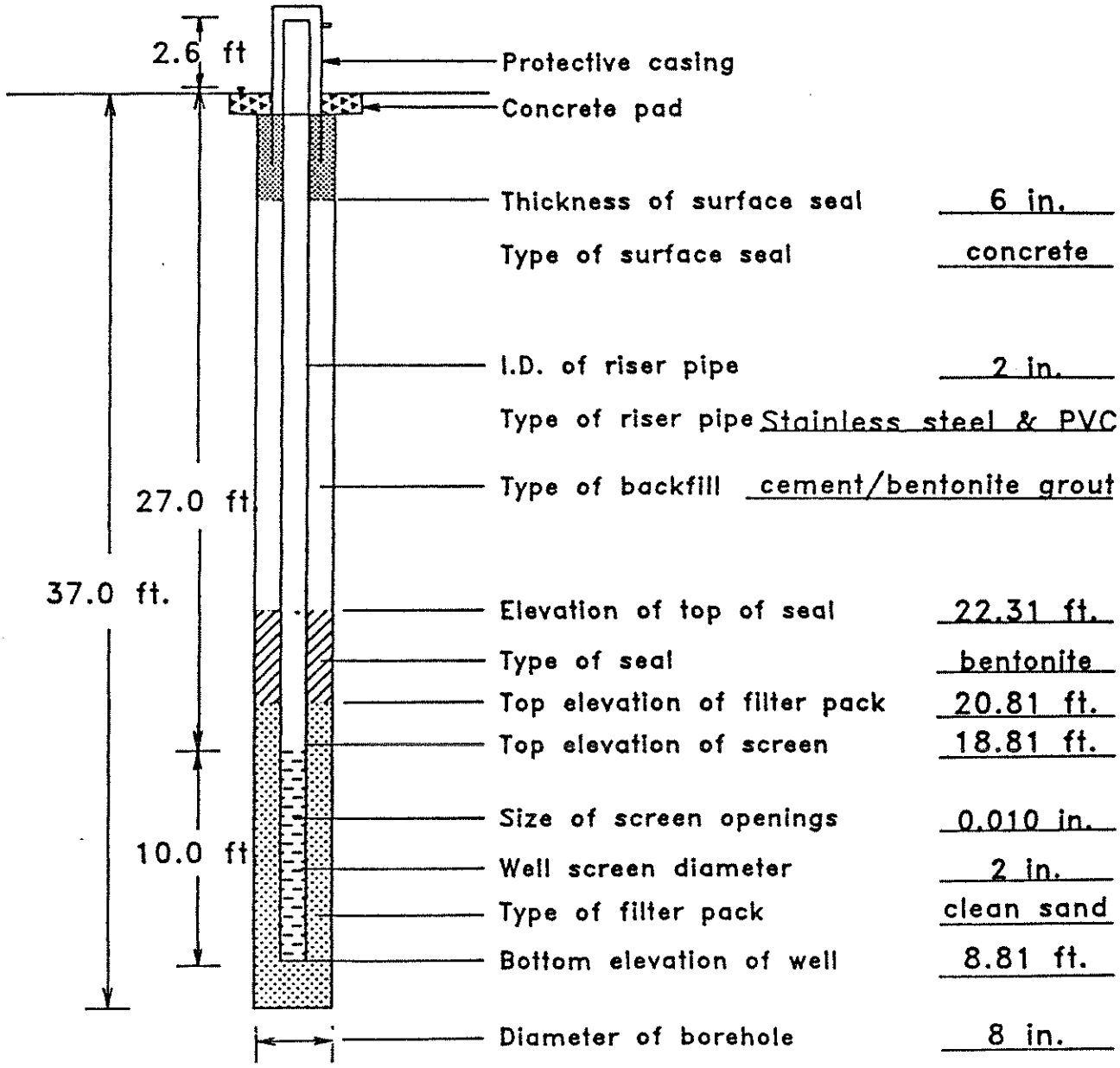

BAIN, PALMER & ASSOCIATES, INC.

MONITORING WELL INSTALLATION SKETCH*

Project J.L. de Ball Girmes
Surveyed by Bain, Palmer & Assoc.
Surveyed from Arbitary 100 ft.
Elevation of concrete pad reference 49.77 ft.
Elevation of top of well pipe 52.43 ft.

Well Number MW-10
Constructed on 02/11/93
Depth to water measured from top of well pipe 22.65 ft.
Water level elevation 29.78 ft.
Water level taken on 02/12/93

* NOTE: Drawing not to scale.

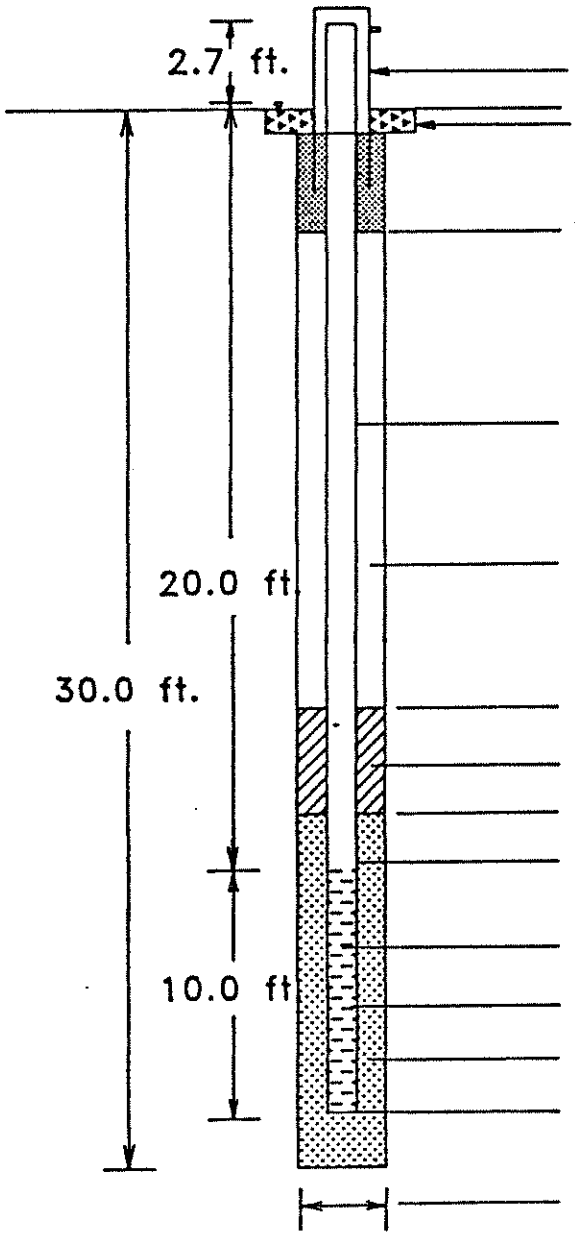

Protective casing	
Concrete pad	
Thickness of surface seal	6 in.
Type of surface seal	concrete
I.D. of riser pipe	2 in.
Type of riser pipe	Stainless steel & PVC
Type of backfill	cement/bentonite grout
Elevation of top of seal	32.77 ft.
Type of seal	bentonite
Top elevation of filter pack	31.77 ft.
Top elevation of screen	29.77 ft.
Size of screen openings	0.010 in.
Well screen diameter	2 in.
Type of filter pack	clean sand
Bottom elevation of well	19.77 ft.
Diameter of borehole	8 in.

J:\CAD\GRAPHIC\70144\70144M11.DWG

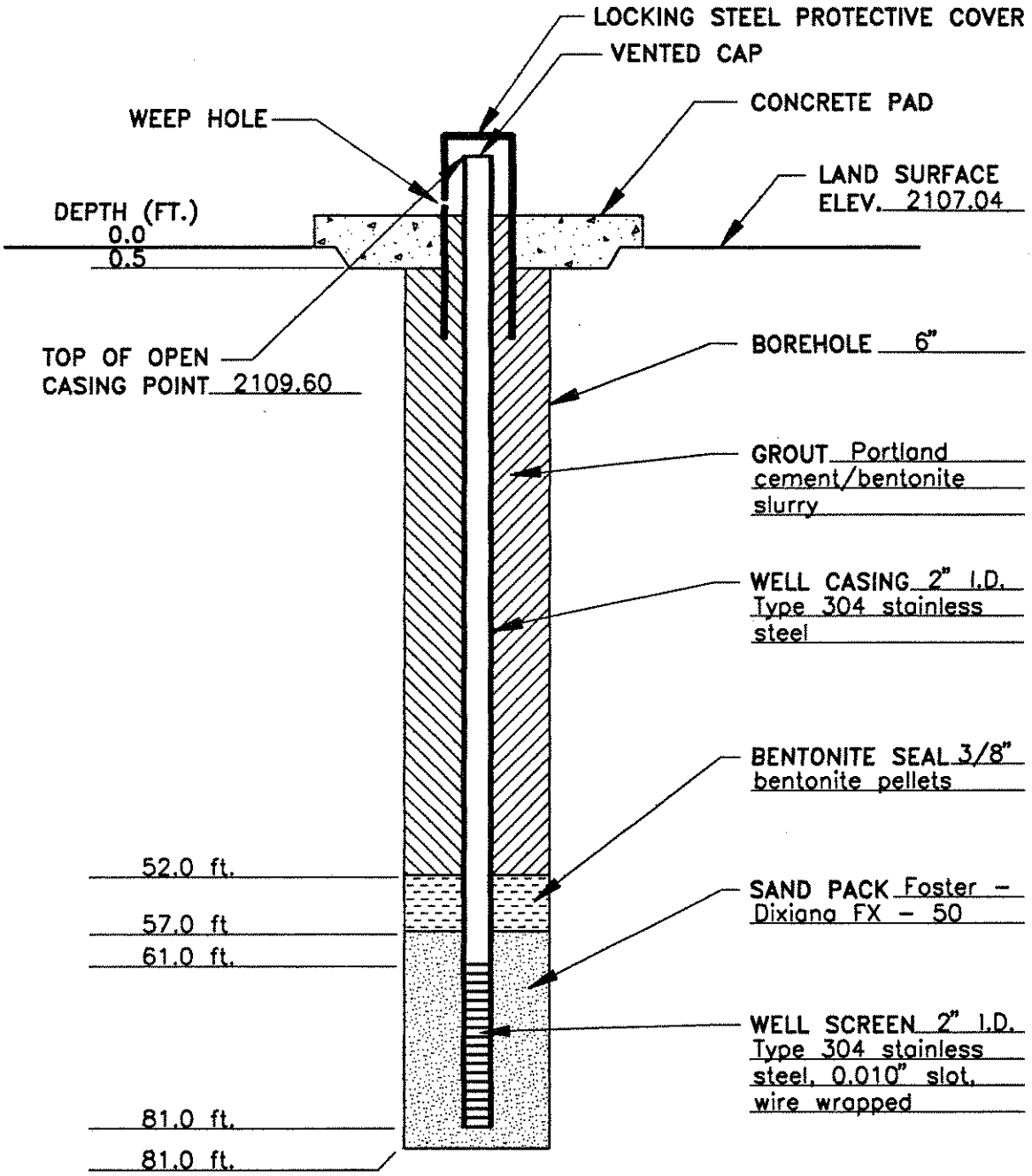

WELL CONSTRUCTION DIAGRAM

Not To Scale

PROJECT SKF - ASHEVILLE, NC

PROJECT NO. 70144.01

WELL NO. MW-11

DATE INSTALLED OCTOBER 19, 1993

DRILLING CONTRACTOR A. E. DRILLING, INC.

RMT GEOLOGIST K. LAUBER

RMT INC.

j:\cad\graphic\70144\70144m12.dwg

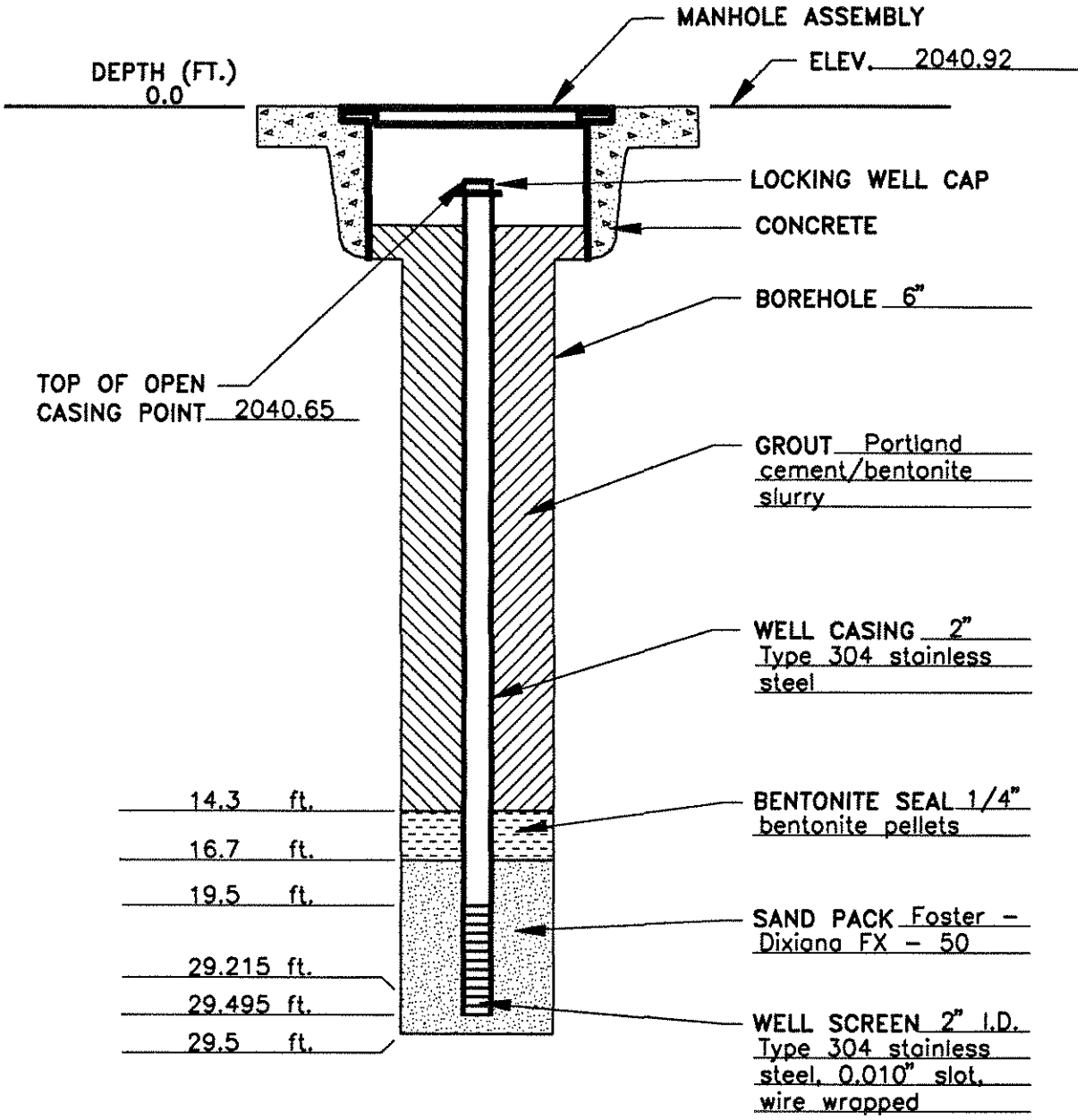

WELL CONSTRUCTION DIAGRAM

Not To Scale

PROJECT SKF - ASHEVILLE, NC

PROJECT NO. 70144.01

WELL NO. MW-12

DATE INSTALLED OCTOBER 28, 1993

DRILLING CONTRACTOR A. E. DRILLING, INC.

RMT GEOLOGIST C. ROWAN

RMT INC.

J:\CAD\GRAPHIC\70144\70144M13.DWG

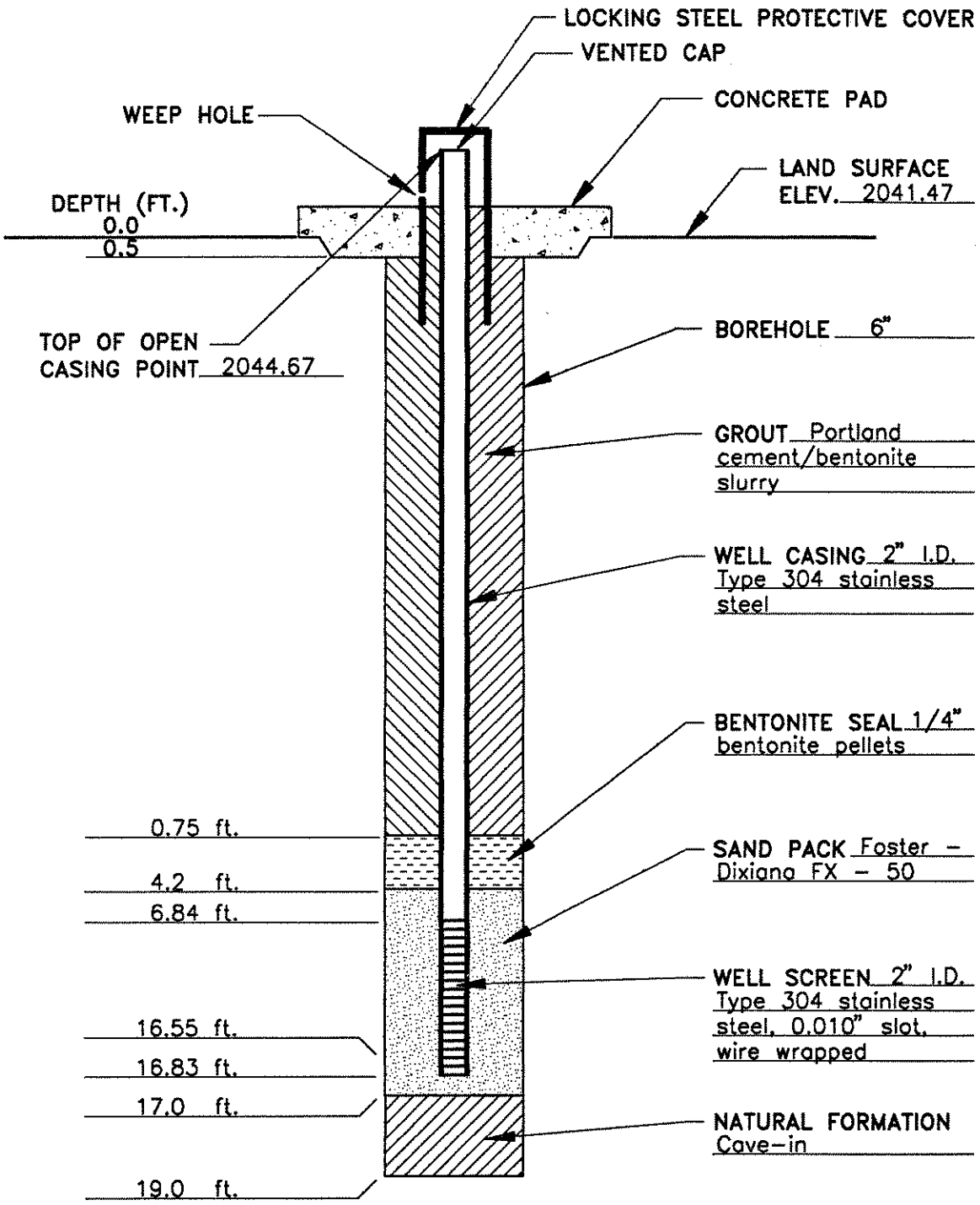

WELL CONSTRUCTION DIAGRAM

Not To Scale

PROJECT SKF - ASHEVILLE, NC

PROJECT NO. 70144.01

WELL NO. MW-13

DATE INSTALLED OCTOBER 27, 1993

DRILLING CONTRACTOR A. E. DRILLING, INC.

RMT GEOLOGIST C. ROWAN

RMT INC.

J:\CAD\GRAPHIC\70144\70144M14.DWG

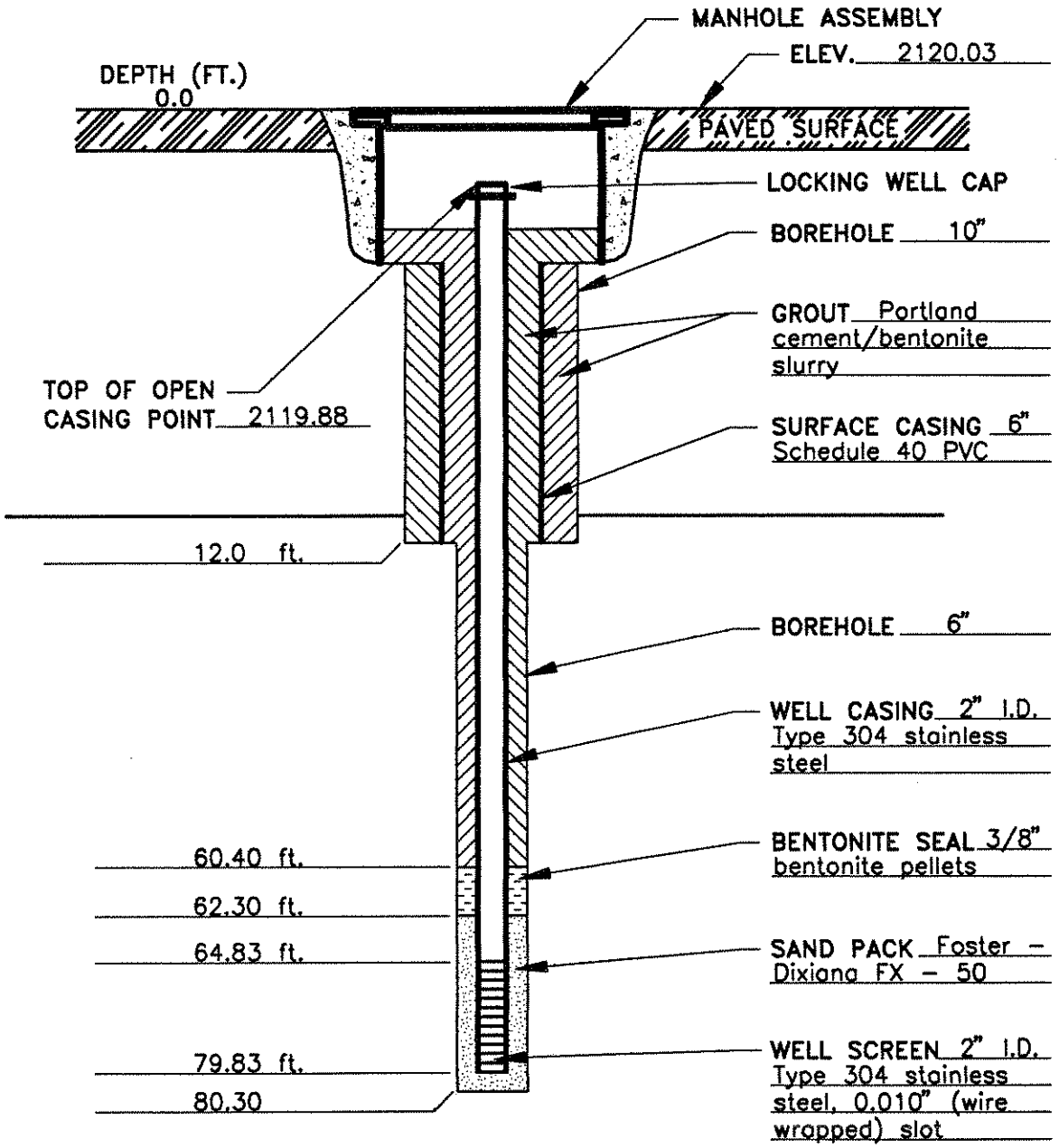

WELL CONSTRUCTION DIAGRAM

Not To Scale

PROJECT SKF - ASHEVILLE, NC

PROJECT NO. 70144.01

WELL NO. MW-14

DATE INSTALLED NOVEMBER 3, 1993

DRILLING CONTRACTOR A. E. DRILLING, INC.

RMT GEOLOGIST K. LAUBER

RMT INC.

j:\cad\graphic\70144\70144m15.dwg

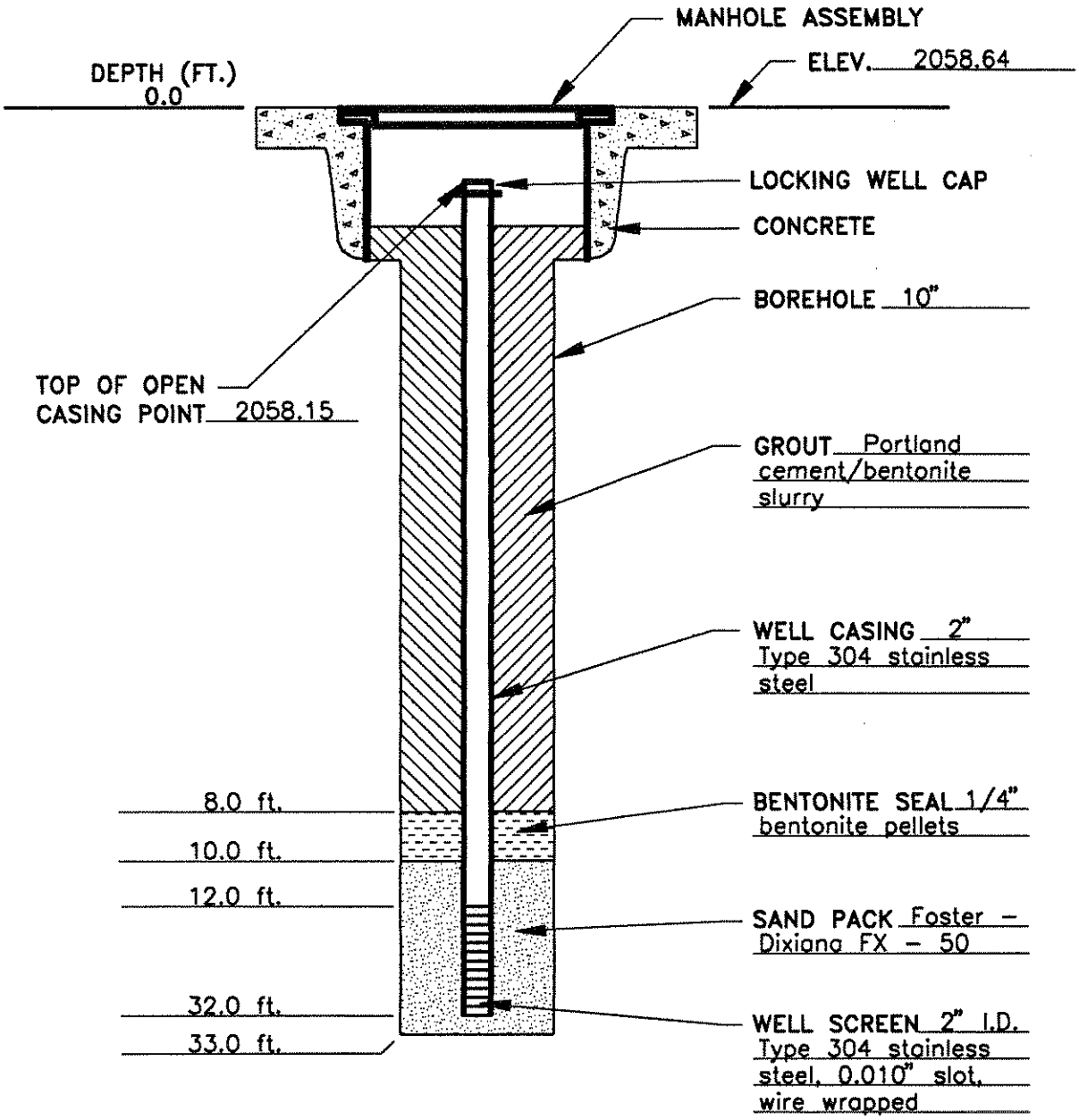

WELL CONSTRUCTION DIAGRAM

Not To Scale

PROJECT SKF - ASHEVILLE, NC

PROJECT NO. 70144.01

WELL NO. MW-15

DATE INSTALLED OCTOBER 26, 1993

DRILLING CONTRACTOR A. E. DRILLING, INC.

RMT GEOLOGIST K. LAUBER

RMT INC.

j:\cad\graphic\70144\7014415A.dwg

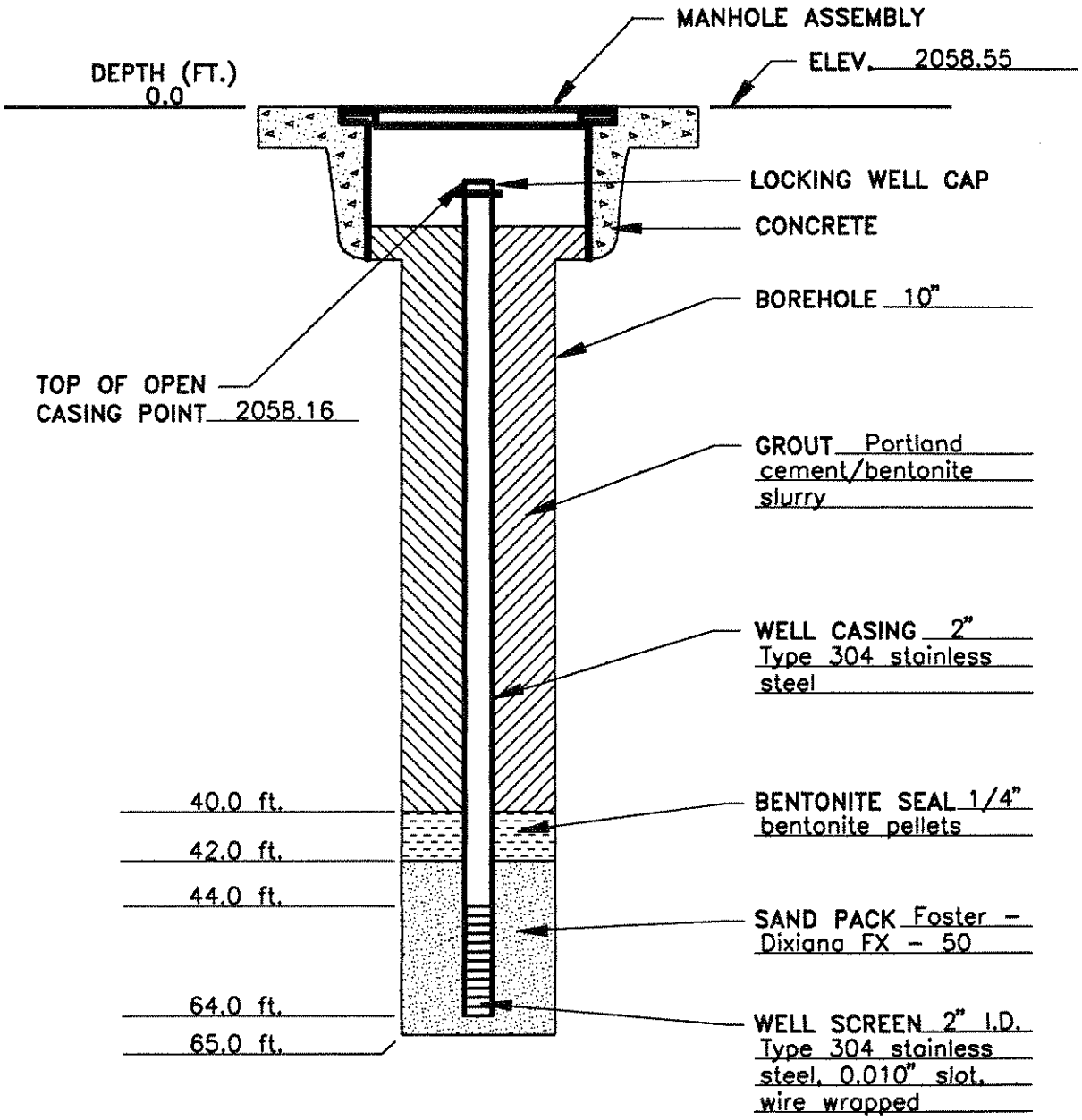

WELL CONSTRUCTION DIAGRAM

Not To Scale

PROJECT SKF - ASHEVILLE, NC

PROJECT NO. 70144.01

WELL NO. MW-15A

DATE INSTALLED OCTOBER 21, 1993

DRILLING CONTRACTOR A. E. DRILLING, INC.

RMT GEOLOGIST K. LAUBER

RMT INC.

j:\cad\graphic\70144\70144m16.dwg

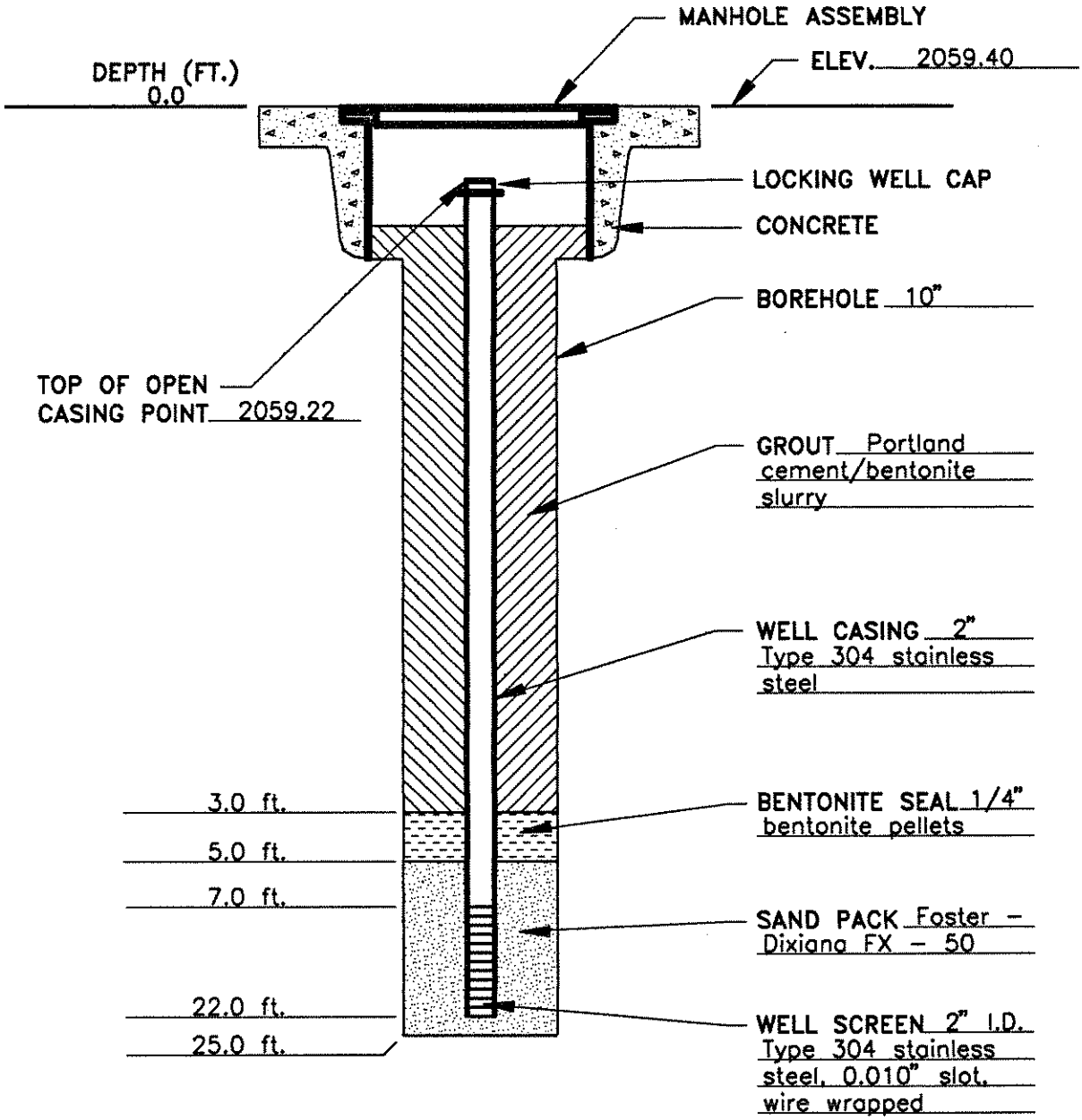

WELL CONSTRUCTION DIAGRAM

Not To Scale

PROJECT SKF - ASHEVILLE, NC

PROJECT NO. 70144.01

WELL NO. MW-16

DATE INSTALLED NOVEMBER 3, 1993

DRILLING CONTRACTOR A. E. DRILLING, INC.

RMT GEOLOGIST K. LAUBER

RMT INC.

j:\cad\graphic\70144\7014416A.dwg

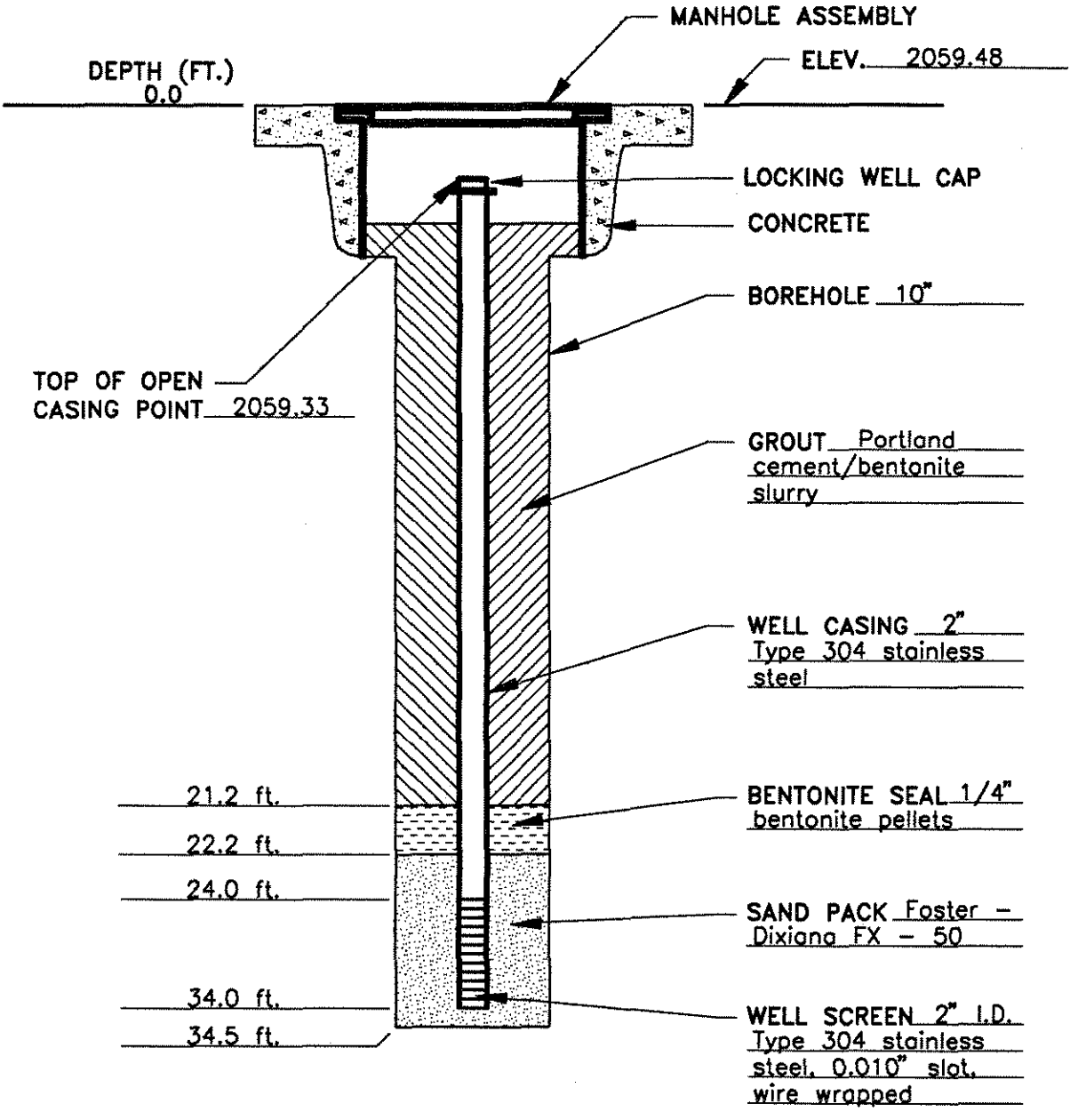

WELL CONSTRUCTION DIAGRAM

Not To Scale

PROJECT SKF - ASHEVILLE, NC
PROJECT NO. 70144.01
WELL NO. MW-16A
DATE INSTALLED NOVEMBER 1, 1993
DRILLING CONTRACTOR A. E. DRILLING, INC.
RMT GEOLOGIST K. LAUBER

RMT INC.

j:\cad\graphic\70144\70144m17.dwg

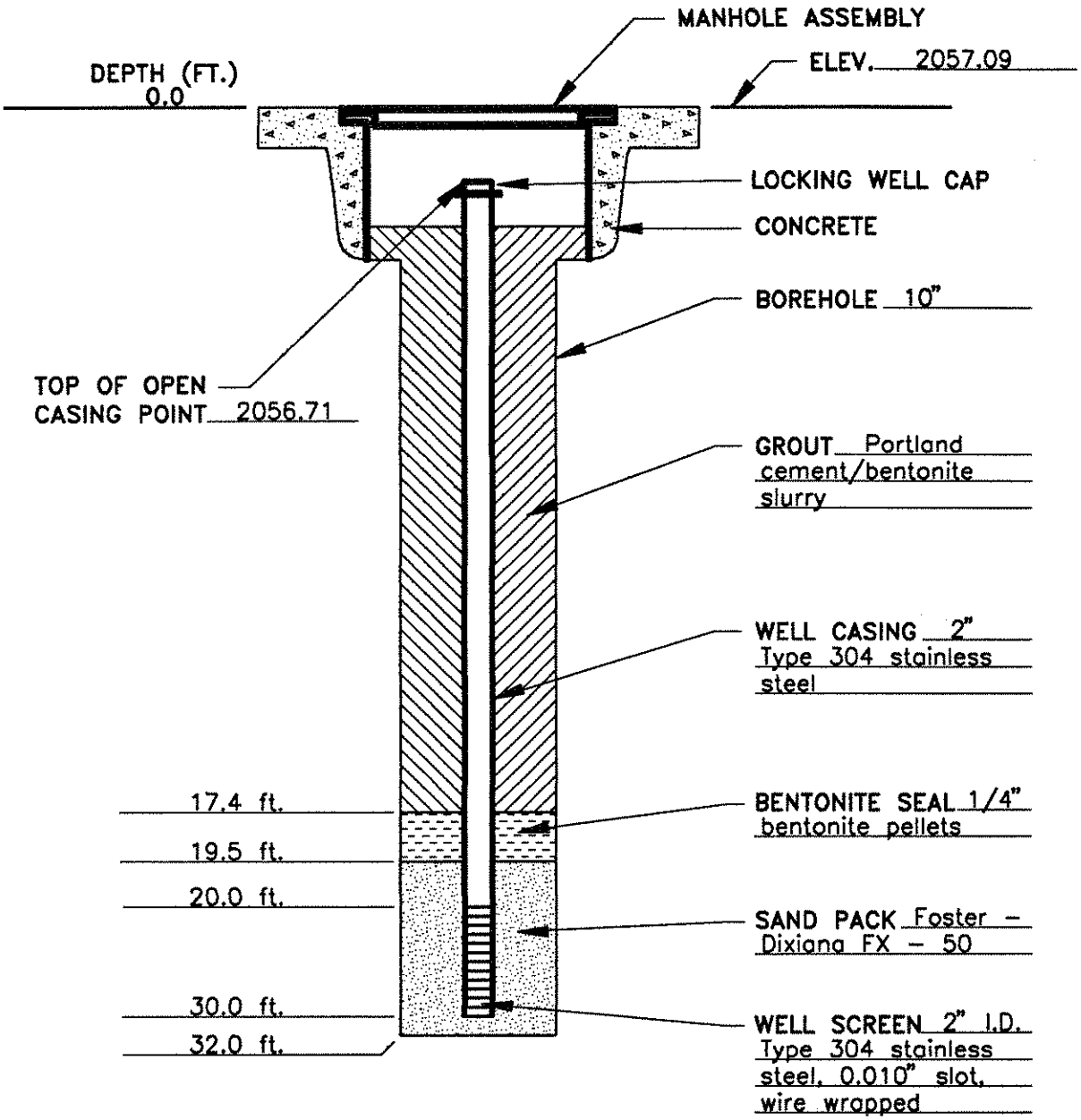

WELL CONSTRUCTION DIAGRAM

Not To Scale

PROJECT SKF - ASHEVILLE, NC
PROJECT NO. 70144.01
WELL NO. MW-17
DATE INSTALLED OCTOBER 29, 1993
DRILLING CONTRACTOR A. E. DRILLING, INC.
RMT GEOLOGIST K. LAUBER

RMT INC.

J:\CAD\GRAPHIC\70144\70144M18.DWG

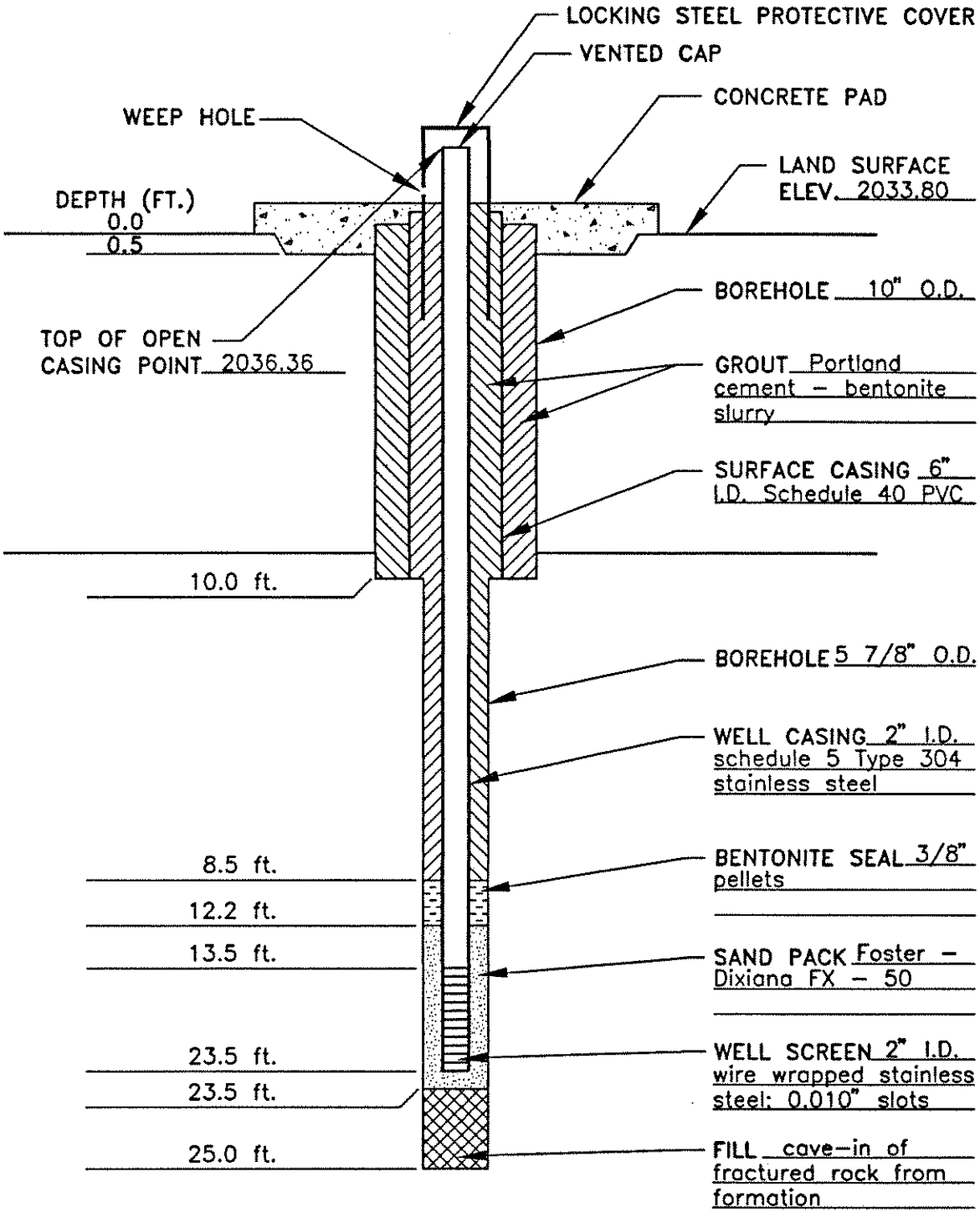

WELL CONSTRUCTION DIAGRAM

Not To Scale

PROJECT SKF - ASHEVILLE

PROJECT NO. 70144.02

WELL NO. MW-18

DATE INSTALLED APRIL 14, 1994

DRILLING CONTRACTOR A. E. DRILLING SERVICES, INC.

RMT GEOLOGIST K. A. LAUBER

RMT INC.

J:\CAD\GRAPHIC\70144\70144M19.DWG

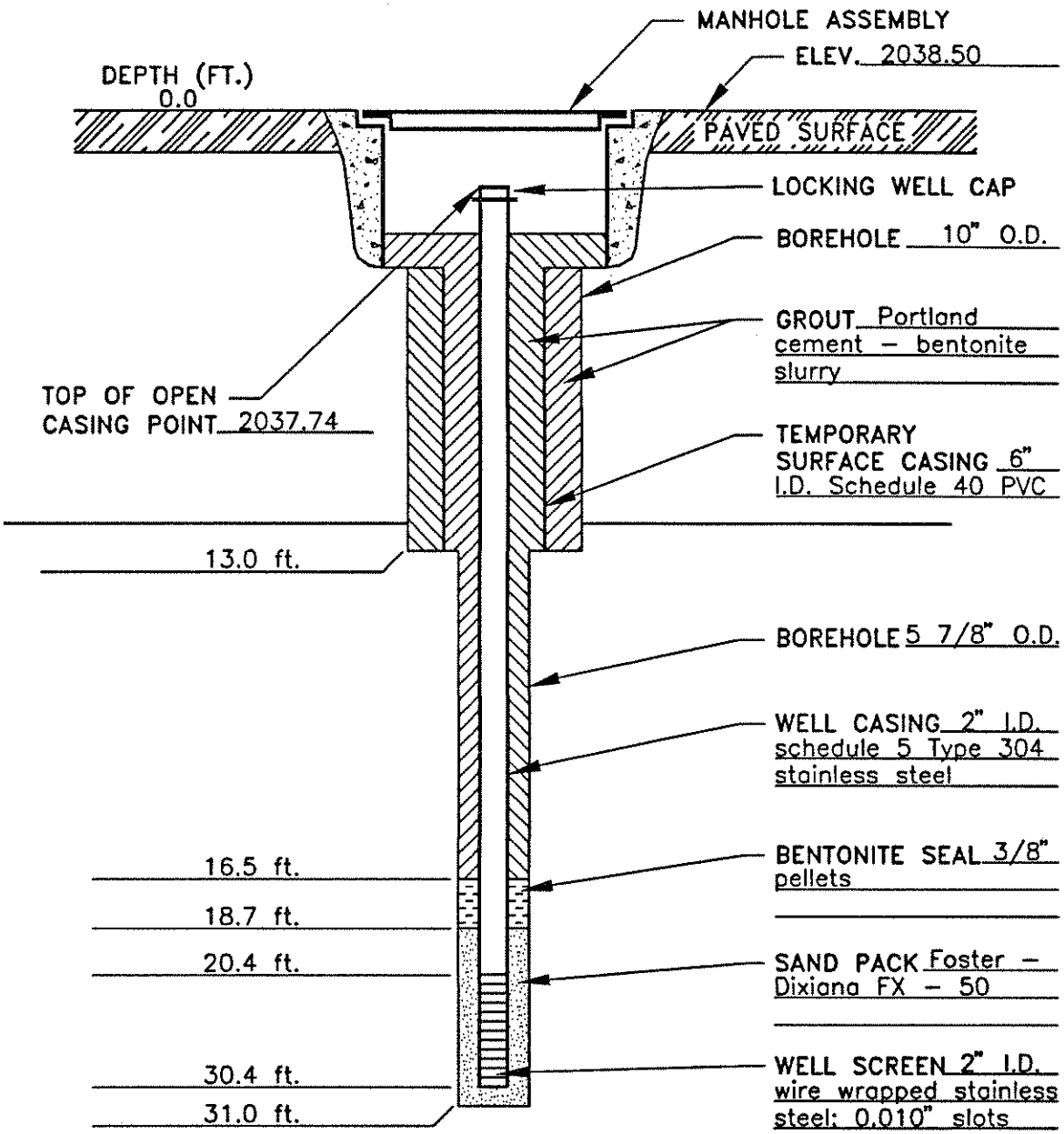

WELL CONSTRUCTION DIAGRAM

Not To Scale

PROJECT SKF – ASHEVILLE
PROJECT NO. 70144.02
WELL NO. MW–19
DATE INSTALLED APRIL 13, 1994
DRILLING CONTRACTOR A. E. DRILLING SERVICES, INC.
RMT GEOLOGIST K. A. LAUBER

RMT INC.

J:\CAD\GRAPHIC\70144\70144M20.DWG

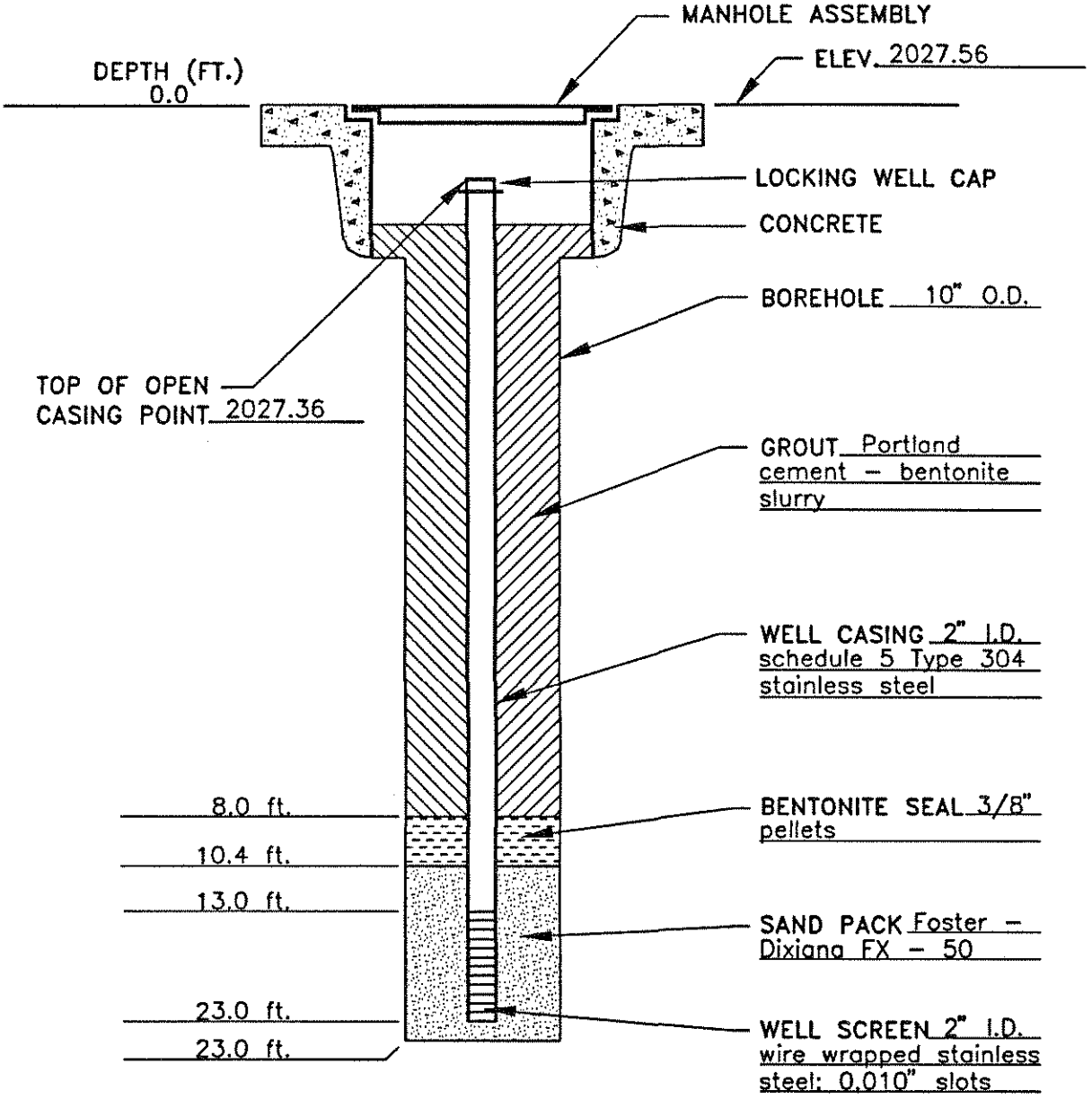

WELL CONSTRUCTION DIAGRAM

Not To Scale

PROJECT SKF – ASHEVILLE

PROJECT NO. 70144.02

WELL NO. MW–20

DATE INSTALLED APRIL 13, 1994

DRILLING CONTRACTOR A. E. DRILLING SERVICES, INC.

RMT GEOLOGIST K. A. LAUBER

RMT INC.

J:\CAD\GRAPHIC\70144\70144M21.DWG

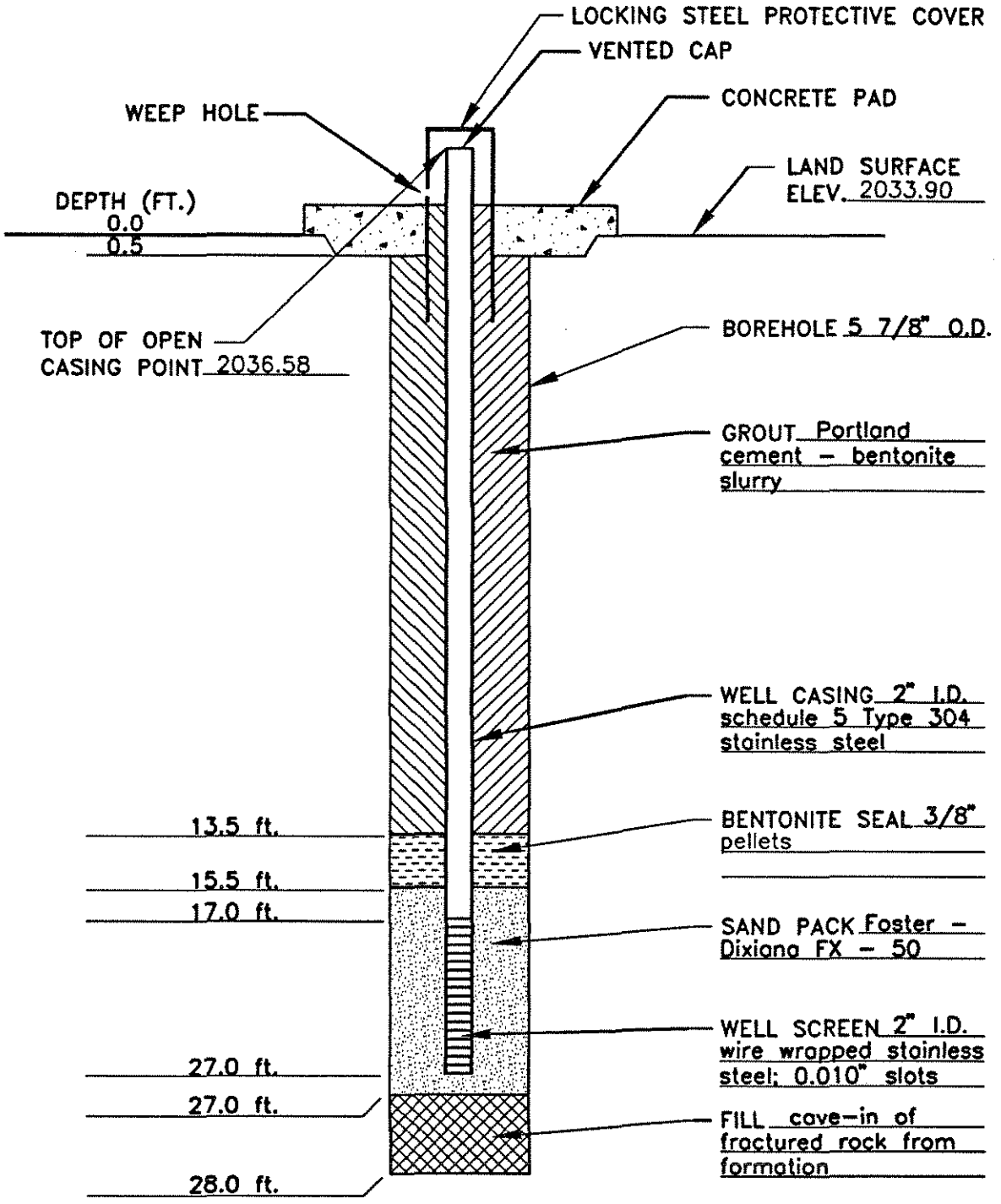

WELL CONSTRUCTION DIAGRAM

Not To Scale

PROJECT SKF - ASHEVILLE

PROJECT NO. 70144.02

WELL NO. MW-21

DATE INSTALLED APRIL 14, 1994

DRILLING CONTRACTOR A. E. DRILLING SERVICES, INC.

RMT GEOLOGIST K. A. LAUBER

RMT INC.

J:\CAD\GRAPHIC\70144\70144M22.DWG

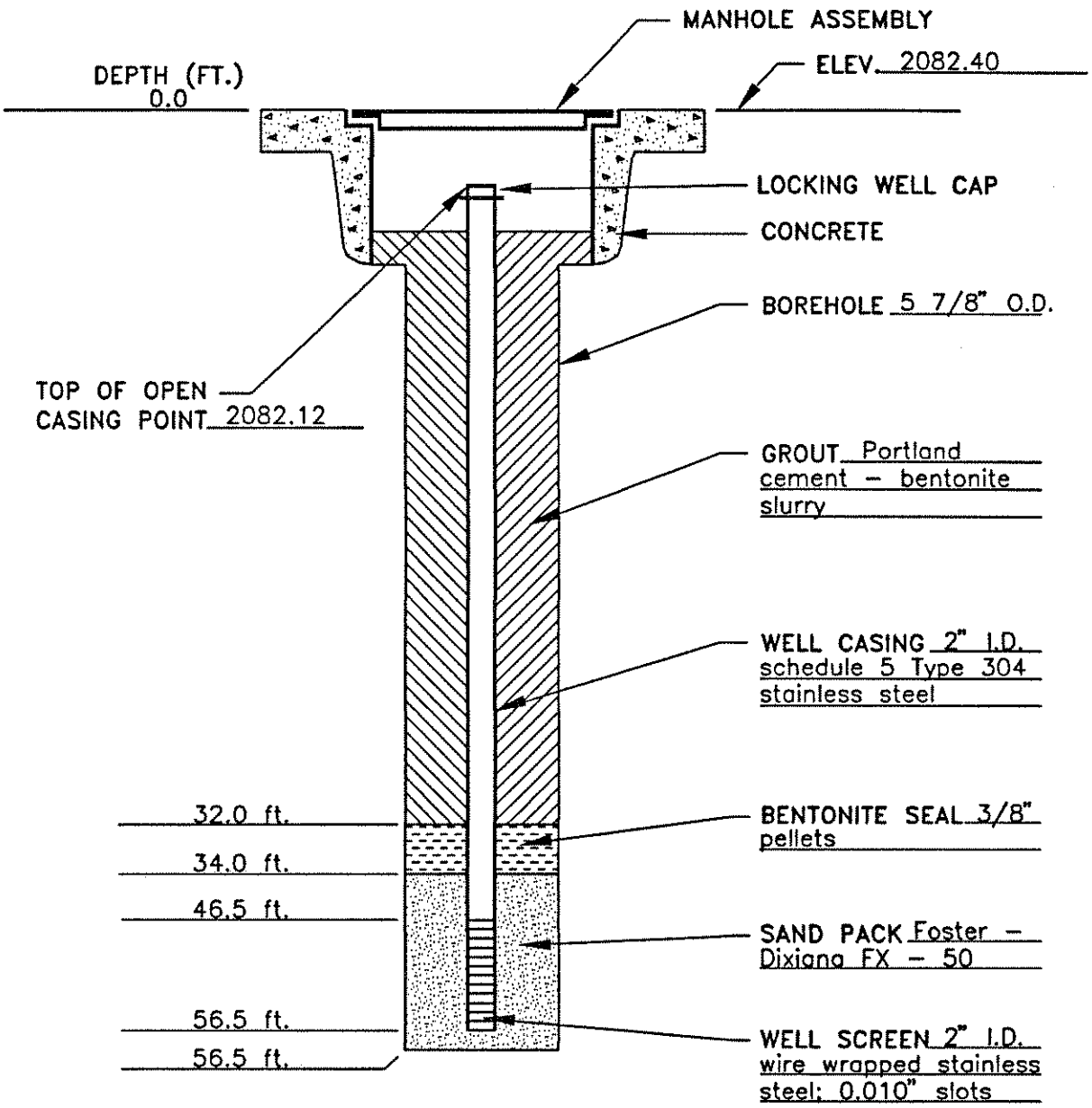

WELL CONSTRUCTION DIAGRAM

Not To Scale

PROJECT SKF - ASHEVILLE

PROJECT NO. 70144.02

WELL NO. MW-22

DATE INSTALLED APRIL 18, 1994

DRILLING CONTRACTOR A. E. DRILLING SERVICES, INC.

RMT GEOLOGIST K. A. LAUBER

RMT INC.

J:\CAD\GRAPHIC\70144\70144M23.DWG

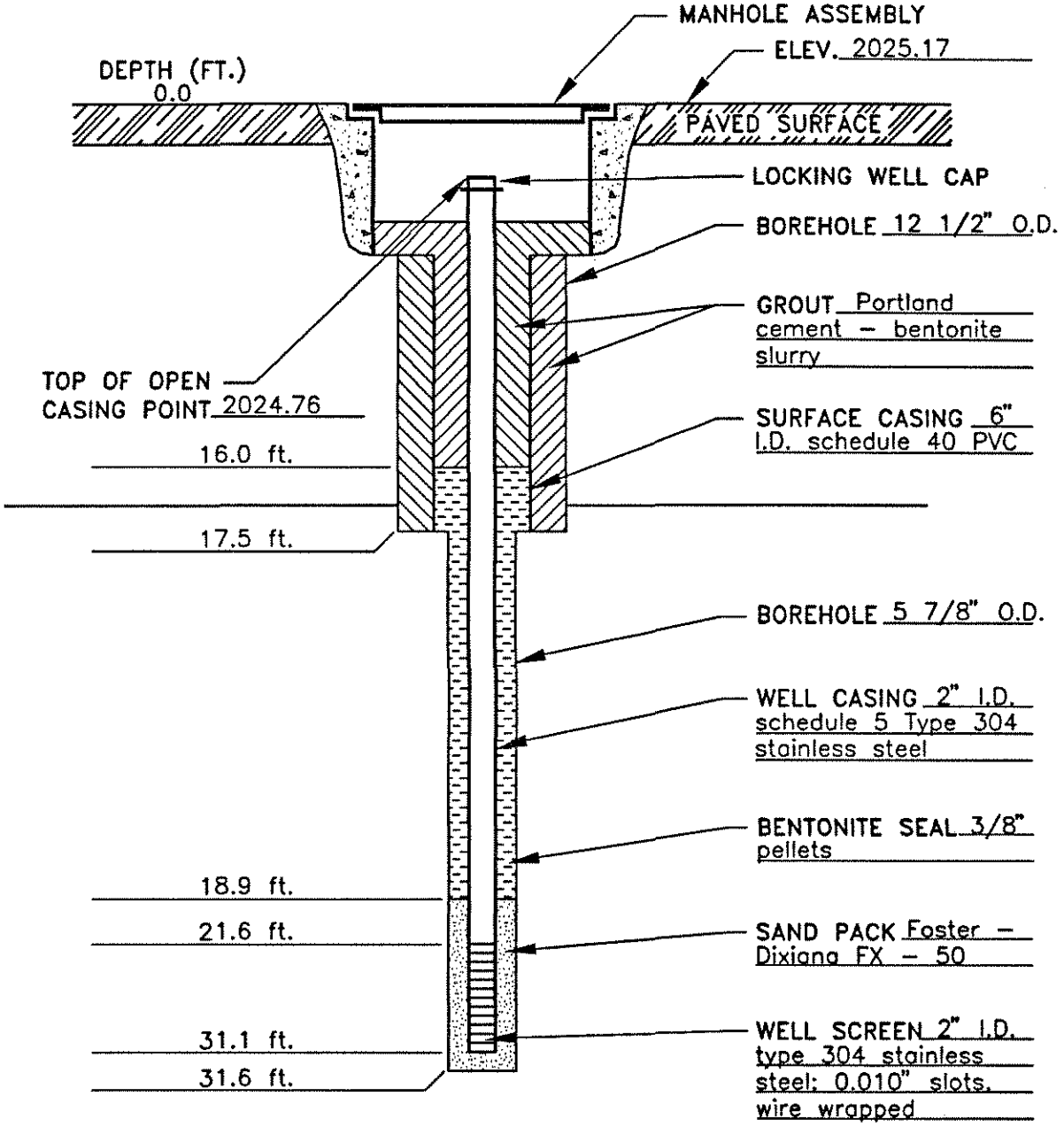

WELL CONSTRUCTION DIAGRAM

Not To Scale

PROJECT SKF - ASHEVILLE
PROJECT NO. 70144.02
WELL NO. MW-23
DATE INSTALLED AUGUST 4,1994
DRILLING CONTRACTOR A. E. DRILLING SERVICES, INC.
RMT GEOLOGIST K. A. LAUBER

RMT INC.

J:\CAD\GRAPHIC\70144\MW-27.DWG

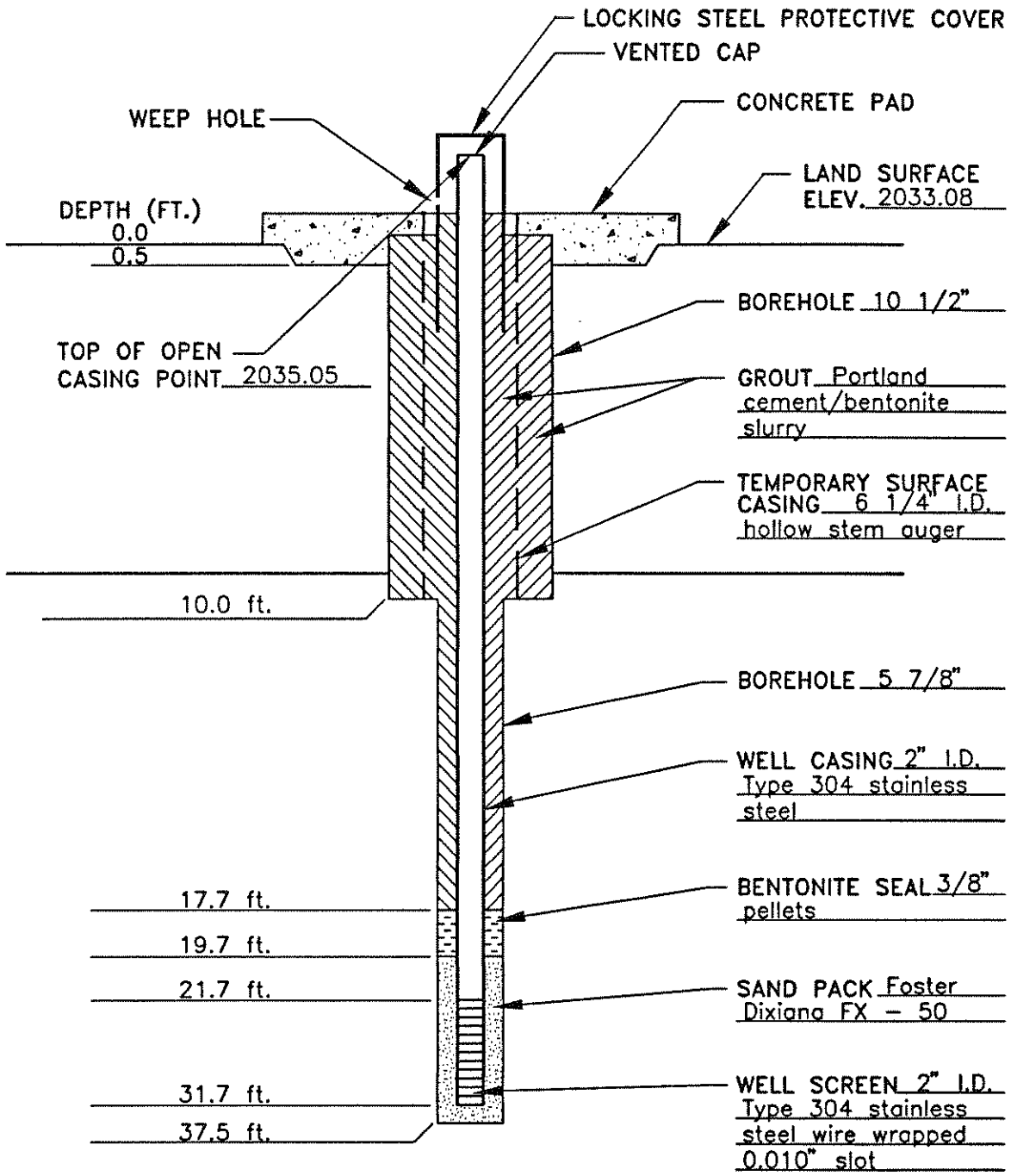

WELL CONSTRUCTION DIAGRAM

Not To Scale

PROJECT SKF - ASHEVILLE
PROJECT NO. 70144.07
WELL NO. MW-24
DATE INSTALLED AUGUST 5, 1994
DRILLING CONTRACTOR A. E. DRILLING SERVICES
RMT GEOLOGIST K. A. LAUBER

RMT INC.

J:\CAD\GRAPHIC\70144\70144M25.DWG

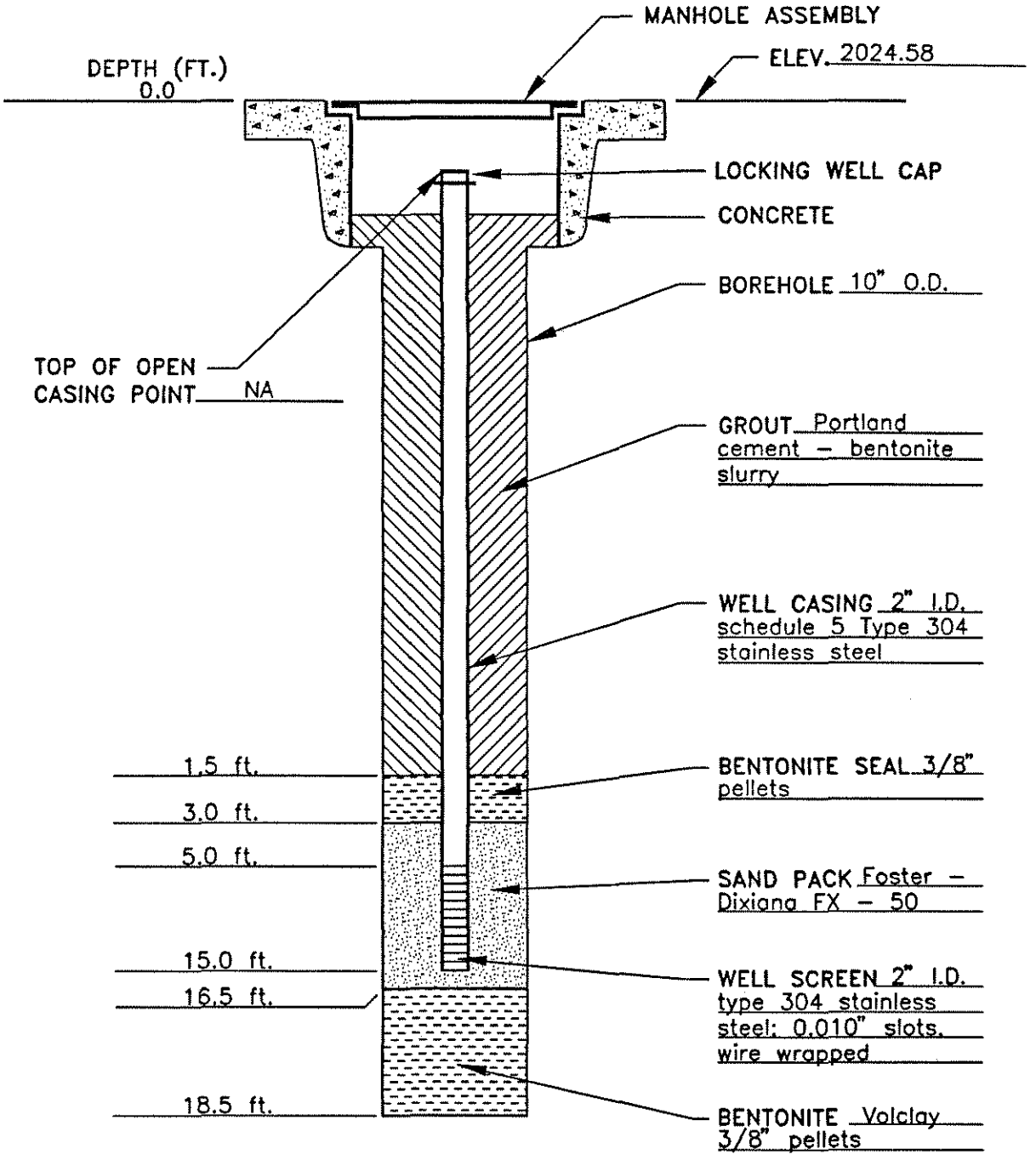

WELL CONSTRUCTION DIAGRAM

Not To Scale

PROJECT SKF – ASHEVILLE
PROJECT NO. 70144.02
WELL NO. MW–25
DATE INSTALLED AUGUST 4, 1994
DRILLING CONTRACTOR A. E. DRILLING SERVICES, INC.
RMT GEOLOGIST K. A. LAUBER

RMT INC.

J:\CAD\GRAPHIC\70144\70144M26.DWG

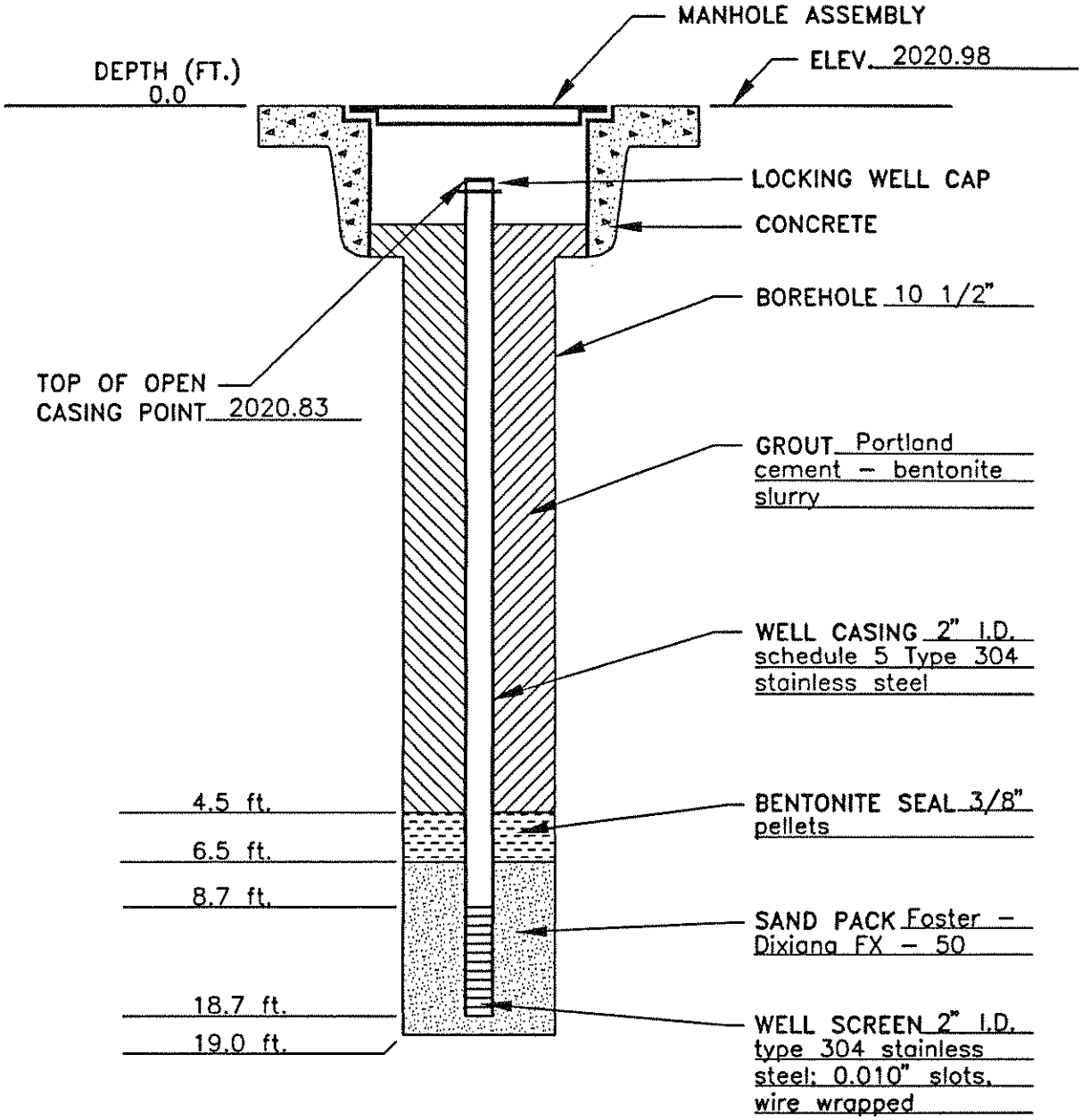

WELL CONSTRUCTION DIAGRAM

Not To Scale

PROJECT SKF – ASHEVILLE

PROJECT NO. 70144.02

WELL NO. MW–26

DATE INSTALLED AUGUST 3, 1994

DRILLING CONTRACTOR A. E. DRILLING SERVICES, INC.

RMT GEOLOGIST K. A. LAUBER

RMT INC.

J:\CAD\GRAPHIC\70144\70144M27.DWG

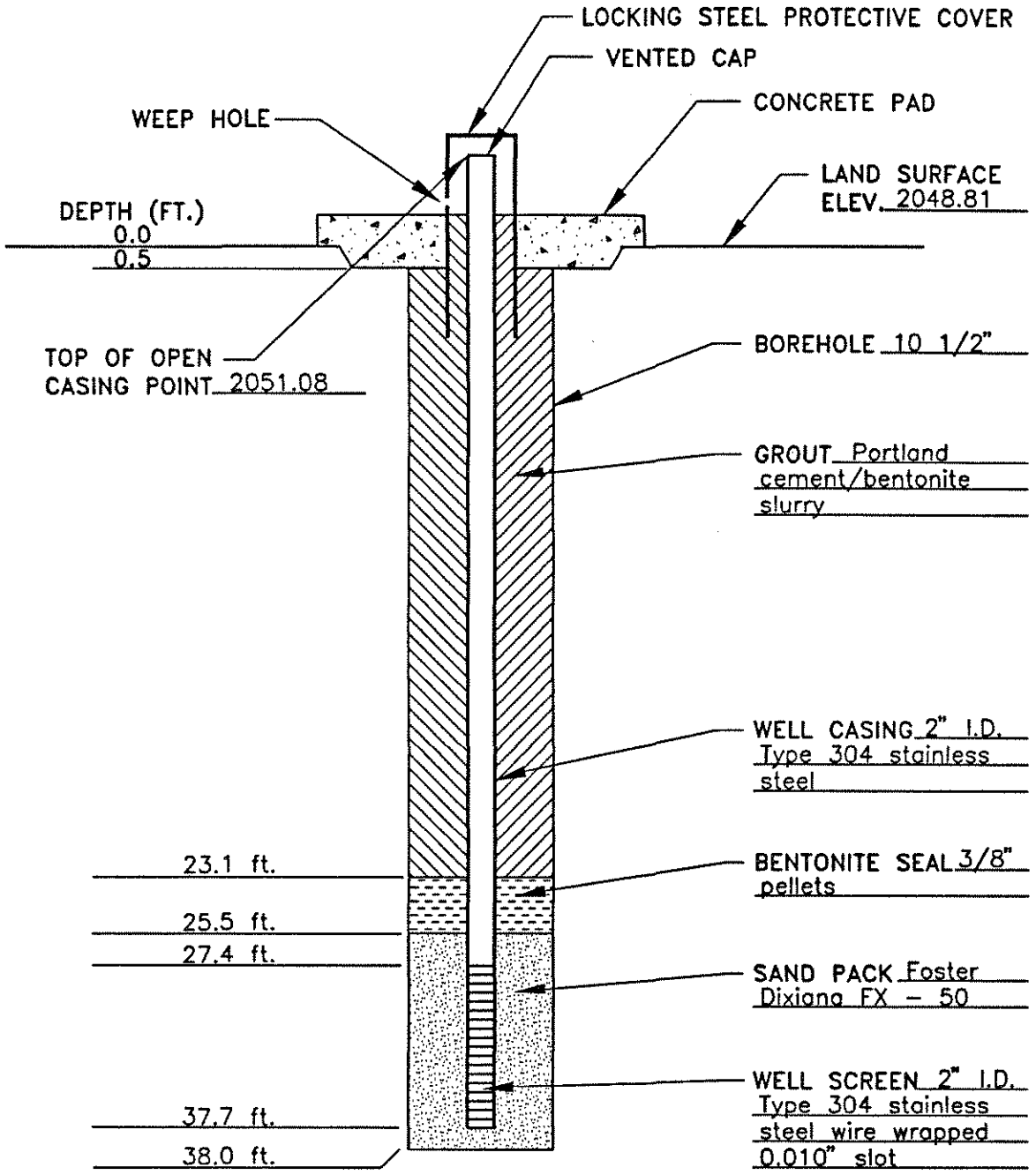

WELL CONSTRUCTION DIAGRAM

Not To Scale

PROJECT SKF - ASHEVILLE
PROJECT NO. 70144.07
WELL NO. MW-27
DATE INSTALLED AUGUST 9, 1994
DRILLING CONTRACTOR A. E. DRILLING SERVICES
RMT GEOLOGIST K. A. LAUBER

RMT INC.

[redacted]

NORTH CAROLINA DEPARTMENT OF NATURAL AND ECONOMIC RESOURCES
OFFICE OF WATER AND AIR RESOURCES
GROUND WATER DIVISION
P. O. BOX 27687 – RALEIGH, N. C. 27611

WELL RECORD

BU 1613

DRILLING CONTRACTOR: Caldwells REG. NO. 99 WELL CONSTRUCTION PERMIT NO.

1. WELL LOCATION: (Show a sketch of the location on back of form)
   Nearest Town: Charlotte Hwy. County: Buncombe
   (Include Community or Subdivision and Lot No.) Quadrangle No. N86a-1
2. OWNER: Metal Finishers
3. ADDRESS: Asheville, N.C.
4. TOPOGRAPHY: drag, rolling, sloped, hilltop, flat
5. USE OF WELL: Domestic DATE: 5/22/72
6. DOES THIS WELL REPLACE AN EXISTING WELL?
7. TOTAL DEPTH: 115 RIG TYPE OR METHOD: Rotary
8. FORMATION SAMPLES COLLECTED: [X] YES No. of Bags
9. CASING:

From	Depth to	ft.	Inside Diam.	Wall thick. or weight/ft.	Type
+1	21		6 in	THW	Steel

10. GROUT:

From	Depth to	ft	Material	Method
0	21		Cement	poured

11. SCREEN:

From	Depth to	ft.	Diam.	Type and Opening

12. GRAVEL:

From	Depth to	ft.	Size	Material

13. WATER ZONES (depth): 86'
14. STATIC WATER LEVEL: 3 ft. above/below top of casing.
    Casing is 1 ft. above land surface. ELEV.
    DATE MEASURED: 5/22/72
15. YIELD (gpm): 50 METHOD OF TESTING: rig
16. PUMPING WATER LEVEL: ft. after hours at gpm.
17. CHLORINATION: Type pills Amount 2#
18. WATER QUALITY: TEMPERATURE (°F)
19. PERMANENT PUMP: (Show a sketch of well head on back of form)
    Date Installed Type Make
    Capacity (gpm) HP
    Intake Depth Airline Depth
20. HAVE YOU INFORMED THE WELL OWNER OF THE DEPARTMENTS REQUIREMENTS AND RECOMMENDATIONS? yes
21. REMARKS:

DRILLING LOG

DEPTH FROM	DEPTH TO	FORMATION DESCRIPTION
0	21	sand & gravel
21	40	black rock
40	60	white & black rock
60	80	granite
80	115	black & white
		Pump test 4
		Settings
		20 to 5
		GRGS
		Log Accil
		Lat. 35 34 03
		Long. 82 30 04
		Elev 2040
		S-1/GRVL

RECEIVED
MAY 26 1972
N.C. Dept. of Water & Air Resources
Raleigh, N.C.

I do hereby certify that this well record is true and exact.

Reuben Caldwell
SIGNATURE OF CONTRACTOR OR AGENT DATE

APPENDIX G

HYDRAULIC CONDUCTIVITY TEST RESULTS

HYDROCON - 1.2
HYDRAULIC CONDUCTIVITY
Bouwer and Rice Method

Well: MW-1

PROJECT NAME: SKF ASHEVILLE
PROJECT NUMBER: 70144.01
FIELD WORK DATE(S): 11-17-93

USER NAME: KAL
DATE: 1-10-94

Rw - BORING RADIUS (IN): 3.83
L - SCREEN LENGTH (FT): 15
HT - SCREEN BASE TO WATER TABLE (FT): 13.4
START TIME (H,M,S): 0,0,0

Rc - WELL RADIUS (IN): 1
D - AQUIFER THICKNESS (FT): 50
STATIC WATER LEVEL (FT): 56.6

Rc was corrected for response in well screen filter material to 2.258 inches

---

TIME (H,M,S)	DEPTH (FT)	TIME (H,M,S)	DEPTH (FT)
0,15,0	56.64	0,0,4	56.97
0,11,0	56.65	0,0,3	57.02
0,8,0	56.66	0,0,2	57.13
0,6,0	56.68	0,0,1	57.51
0,5,0	56.69	0,0,0	58.18
0,4,30	56.7		
0,4,0	56.71		
0,3,25	56.72		
0,3,5	56.73		
0,2,50	56.74		
0,2,30	56.75		
0,2,15	56.76		
0,2,0	56.77		
0,1,35	56.78		
0,1,27	56.79		
0,1,19	56.8		
0,1,10	56.81		
0,1,2	56.82		
0,0,53	56.83		
0,0,46	56.84		
0,0,34	56.85		
0,0,29	56.86		
0,0,25	56.87		
0,0,20	56.88		
0,0,16	56.89		
0,0,14	56.9		
0,0,9	56.91		
0,0,8	56.92		
0,0,6	56.93		
0,0,5	56.95		

(1/t) (ln(Yo/Yt))= 0.0042314

PARTIALLY PENETRATING: A= 2.93 B= 0.51

HYDRAULIC CONDUCTIVITY: 1.22E-05 ft/sec
3.73E-04 cm/sec

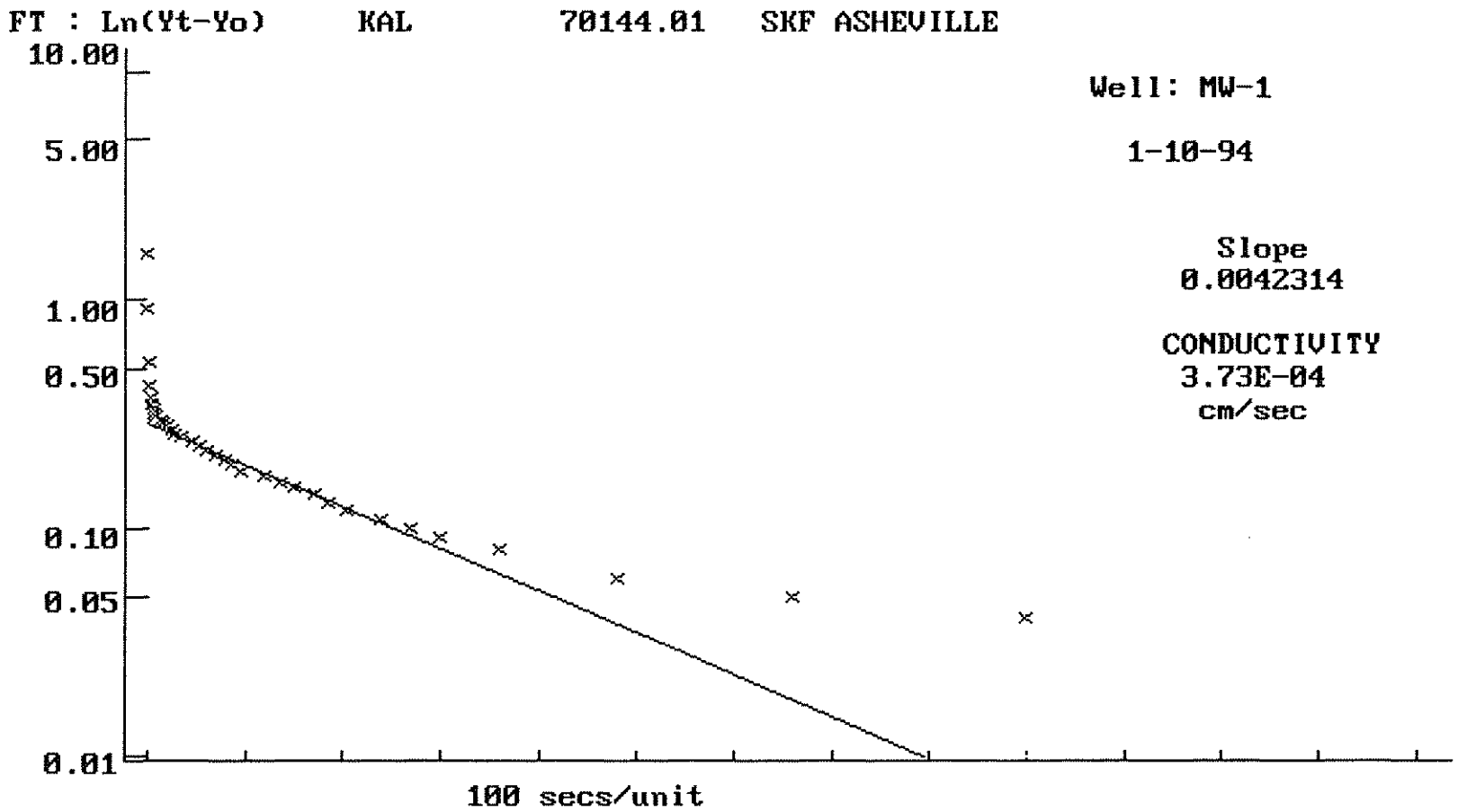
FT : Ln(Yt-Yo)
KAL
70144.01
SKF ASHEVILLE
10.00
5.00
1.00
0.50
0.10
0.05
0.01
Well: MW-1
1-10-94
Slope
0.0042314
CONDUCTIVITY
3.73E-04
cm/sec
100 secs/unit

HYDROCON - 1.2
HYDRAULIC CONDUCTIVITY
Bouwer and Rice Method

Well: MW-2

PROJECT NAME: SKF ASHEVILLE
PROJECT NUMBER: 70144.01
FIELD WORK DATE(S): 11-18-93

USER NAME: KAL
DATE: 1-10-94

Rw - BORING RADIUS (IN): 2.91
L - SCREEN LENGTH (FT): 10
HT - SCREEN BASE TO WATER TABLE (FT): 8.42
START TIME (H,M,S): 0,0,0

Rc - WELL RADIUS (IN): 1
D - AQUIFER THICKNESS (FT): 25
STATIC WATER LEVEL (FT): 21.58

Rc was corrected for response in well screen filter material to 1.800 inches

---

TIME (H,M,S)	DEPTH (FT)	TIME (H,M,S)	DEPTH (FT)
0,0,0	22.938	0,1,45.48	21.88
0,0,.24	22.756	0,2,15.48	21.85
0,0,.48	22.645	0,2,45.48	21.83
0,0,.72	22.539	0,3,15.48	21.82
0,0,.96	22.456	0,3,45.48	21.8
0,0,1.26	22.38	0,4,15.48	21.79
0,0,1.5	22.32	0,4,45.48001	21.77
0,0,1.74	22.27	0,5,15.48001	21.76
0,0,1.98	22.22	0,5,45.48001	21.75
0,0,2.22	22.19	0,6,15.48001	21.74
0,0,2.46	22.18	0,6,45.35999	21.73
0,0,2.76	22.15	0,7,45.35999	21.71
0,0,3.24	22.14	0,8,15.35999	21.7
0,0,3.72	22.12	0,9,45.35999	21.69
0,0,3.96	22.11	0,11,45.35999	21.67
0,0,4.5	22.1	0,13,45.35999	21.66
0,0,4.74	22.09	0,15,45.35999	21.64
0,0,5.22	22.08	0,19,45.35999	21.63
0,0,15.48	22.04	0,23,45.35999	21.62
0,0,20.46	22	0,33,45.35999	21.61
0,0,25.5	21.99		
0,0,30.48	22.01		
0,0,40.5	21.96		
0,0,45.48	21.95		
0,0,50.46	21.94		
0,1,.4799995	21.93		
0,1,5.459999	21.92		
0,1,15.48	21.91		
0,1,30.48	21.9		
0,1,35.46	21.89		

(1/t) (ln(Yo/Yt))= 0.0022933

PARTIALLY PENETRATING: A= 2.77 B= 0.48

HYDRAULIC CONDUCTIVITY: 6.05E-06 ft/sec
1.84E-04 cm/sec

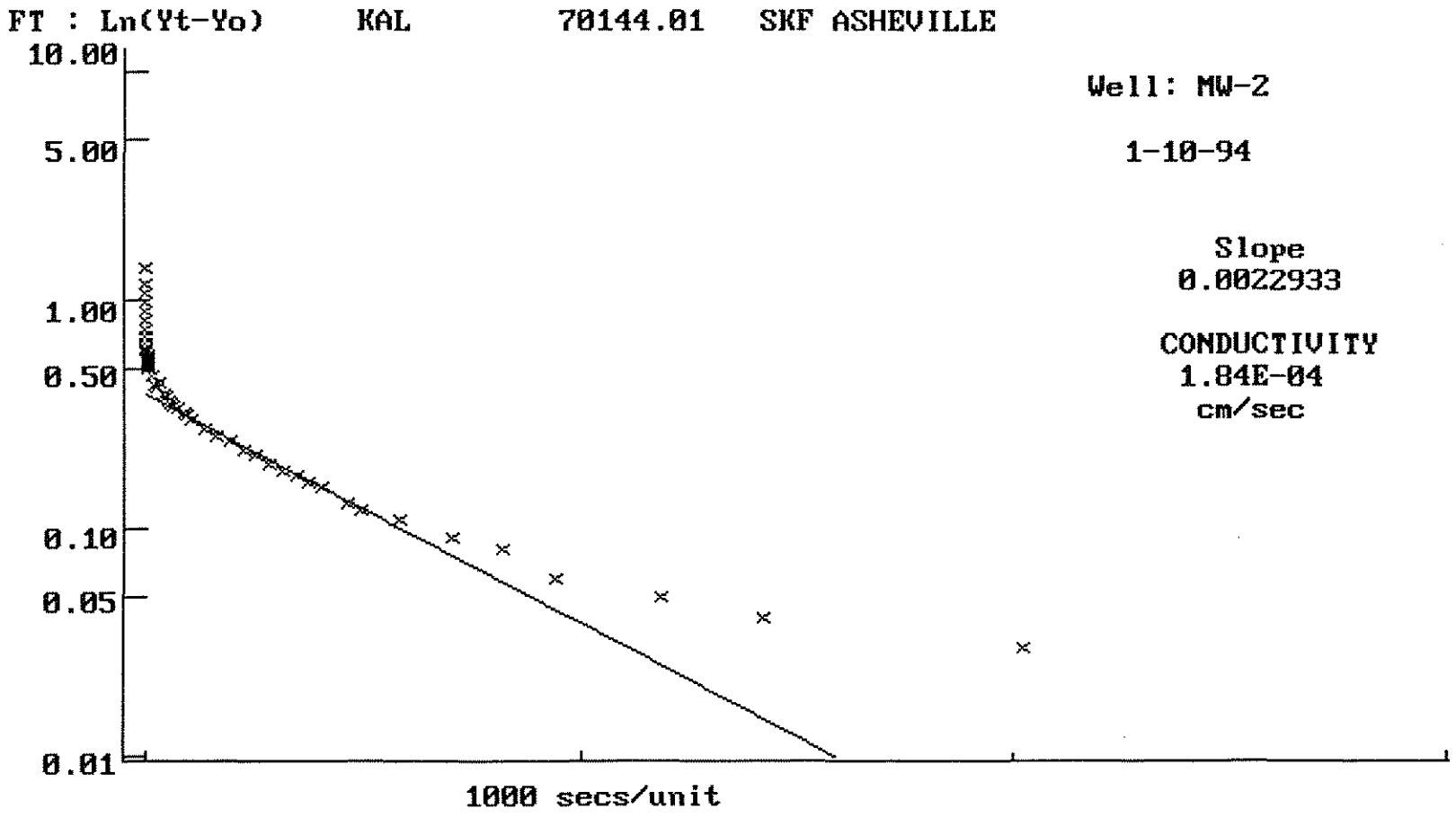
FT : Ln(Yt-Yo)
KAL
70144.01
SKF ASHEVILLE
10.00
5.00
1.00
0.50
0.10
0.05
0.01
Well: MW-2
1-10-94
Slope
0.0022933
CONDUCTIVITY
1.84E-04
cm/sec
1000 secs/unit

HYDROCON - 1.2
HYDRAULIC CONDUCTIVITY
Bouwer and Rice Method

Well: MW-4

PROJECT NAME: SKF ASHEVILLE
PROJECT NUMBER: 70144.01
FIELD WORK DATE(S): 11-18,19-93

USER NAME: KAL
DATE: 1-9-94

Rw - BORING RADIUS (IN): 2.94
L - SCREEN LENGTH (FT): 52
HT - SCREEN BASE TO WATER TABLE (FT): 21.48
START TIME (H,M,S): 0,0,0

Rc - WELL RADIUS (IN): 2.94
D - AQUIFER THICKNESS (FT): 100
STATIC WATER LEVEL (FT): 60.52

TIME (H,M,S)	DEPTH (FT)	TIME (H,M,S)	DEPTH (FT)
3,8,31	60.82	0,25,55	61.34
3,3,31	60.82	0,20,55	61.39
2,58,31	60.83	0,15,55	61.44
2,53,31	60.84	0,14,55	61.45
2,48,31	60.85	0,13,55	61.46
2,38,31	60.86	0,12,55	61.48
2,33,31	60.87	0,11,55	61.49
2,28,31	60.88	0,10,55	61.5
2,18,31	60.89	0,9,55	61.52
2,13,31	60.9	0,8,55	61.53
2,8,31	60.91	0,7,55	61.54
2,3,31	60.92	0,6,55	61.56
1,55,55	60.94	0,5,55	61.58
1,50,55	60.95	0,4,55	61.59
1,45,55	60.96	0,4,25	61.61
1,40,55	60.98	0,3,55	61.62
1,35,55	61	0,3,25	61.63
1,30,55	61.01	0,3,15	61.64
1,25,55	61.02	0,2,55	61.65
1,20,55	61.04	0,2,25	61.66
1,15,55	61.07	0,2,10	61.67
1,10,55	61.08	0,1,55	61.68
1,5,55	61.1	0,1,40	61.69
1,0,55	61.13	0,1,30	61.7
0,55,55	61.15	0,1,19	61.71
0,50,55	61.18	0,1,1	61.72
0,45,55	61.2	0,0,52	61.73
0,40,55	61.24	0,0,45	61.74
0,35,55	61.26	0,0,36	61.75
0,30,55	61.31	0,0,30	61.76

TIME (H,M,S)	DEPTH (FT)
0,0,23	61.77
0,0,18	61.78
0,0,8	61.79
0,0,5	61.8
0,0,1	61.81
0,0,0	61.82

(1/t) (ln(Yo/Yt))= 0.0001386

PARTIALLY PENETRATING: A= 6.08 B= 1.19

HYDRAULIC CONDUCTIVITY: 2.61E-07 ft/sec
7.95E-06 cm/sec

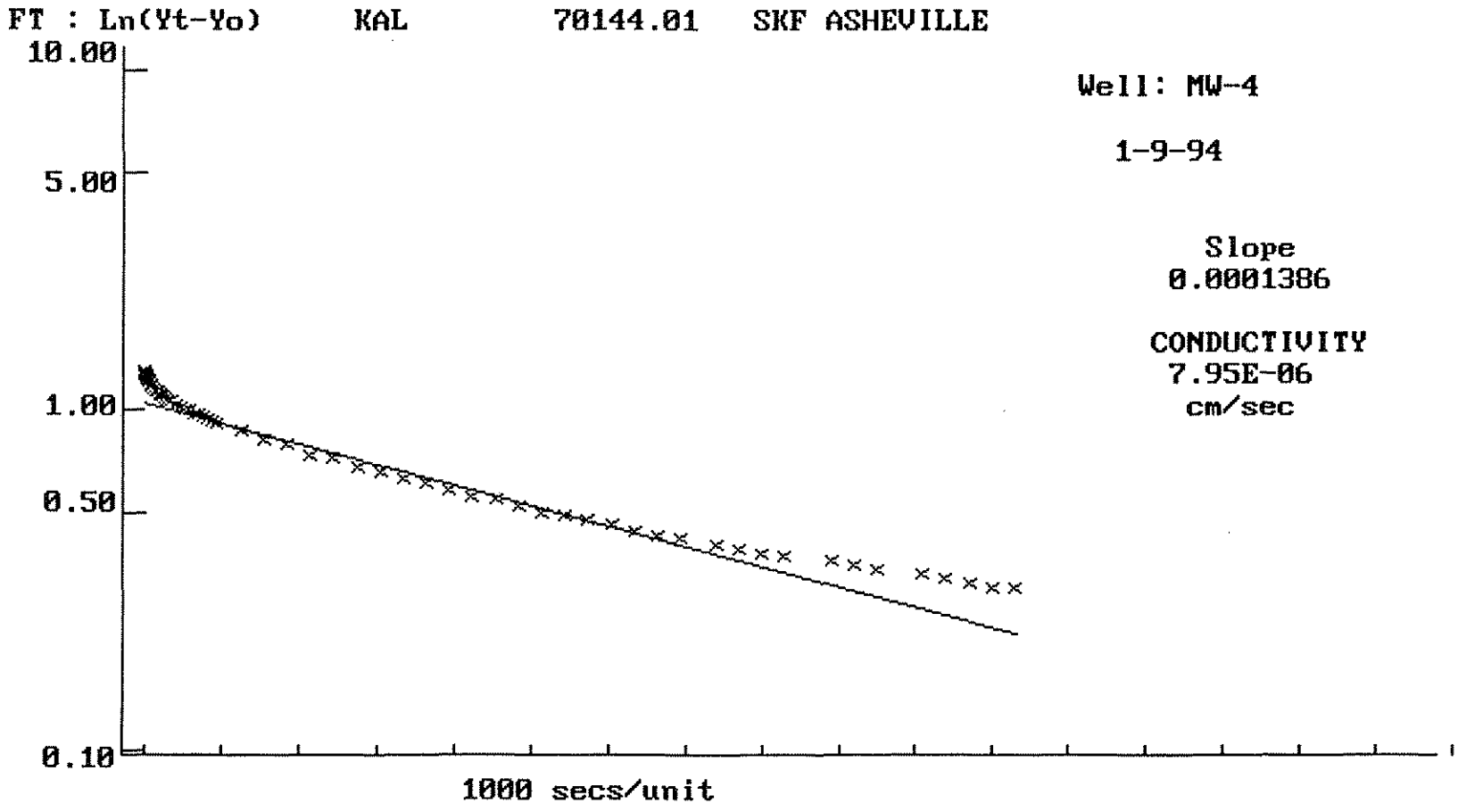
FT : Ln(Yt-Yo)
KAL
70144.01
SKF ASHEVILLE
10.00
5.00
1.00
0.50
0.10
1000 secs/unit
Well: MW-4
1-9-94
Slope
0.0001386
CONDUCTIVITY
7.95E-06
cm/sec

HYDROCON - 1.2
HYDRAULIC CONDUCTIVITY
Bouwer and Rice Method

Well: MW-5

PROJECT NAME: SKF ASHEVILLE
PROJECT NUMBER: 70144.01
FIELD WORK DATE(S): 11-18-93

USER NAME: KAL
DATE: 1-10-94

Rw - BORING RADIUS (IN): 2.94
L - SCREEN LENGTH (FT): 38.5
HT - SCREEN BASE TO WATER TABLE (FT): 9.99
START TIME (H,M,S): 0,0,0

Rc - WELL RADIUS (IN): 2.94
D - AQUIFER THICKNESS (FT): 100
STATIC WATER LEVEL (FT): 63.01

TIME (H,M,S)	DEPTH (FT)
0,0,0	64.21
0,0,4.98	64.21
0,0,15	64.2
0,0,19.98	64.19
0,0,24.96	64.18
0,0,30	64.17
0,0,39.96	64.16
0,0,45	64.15
0,1,0	64.14
0,1,9.959999	64.13
0,1,15	64.12
0,1,24.96	64.11
0,1,34.98	64.1
0,2,4.980003	64.06
0,2,34.98	64.03
0,3,4.979996	64
0,3,34.98	63.97
0,4,4.979996	63.94
0,4,34.98001	63.91
0,5,4.980011	63.88
0,5,34.98001	63.86
0,6,4.980011	63.83
0,6,34.98001	63.81
0,7,4.980011	63.78
0,7,34.98001	63.76
0,8,4.980011	63.74
0,8,34.97998	63.71
0,9,4.97998	63.7
0,9,34.97998	63.68
0,11,34.97998	63.6
0,13,34.97998	63.53
0,15,34.97998	63.48
0,17,34.97998	63.43
0,19,34.97998	63.38
0,21,34.97998	63.35
0,23,34.97998	63.31
0,25,34.97998	63.28
0,27,34.97998	63.25
0,29,34.97998	63.24
0,31,34.97998	63.22
0,33,34.97998	63.2
0,35,34.97998	63.18
0,37,34.97998	63.17
0,39,34.97998	63.16
0,43,34.97998	63.15
0,45,34.97998	63.14
0,49,34.97998	63.13
0,53,34.97998	63.12
0,59,34.97998	63.11
1,9,34.97998	63.1
1,31,34.97998	63.09
1,42,34.97998	63.08

(1/t) (ln(Yo/Yt))= 0.0009648

PARTIALLY PENETRATING: A= 5.49 B= 0.89

HYDRAULIC CONDUCTIVITY: 2.06E-06 ft/sec
6.28E-05 cm/sec

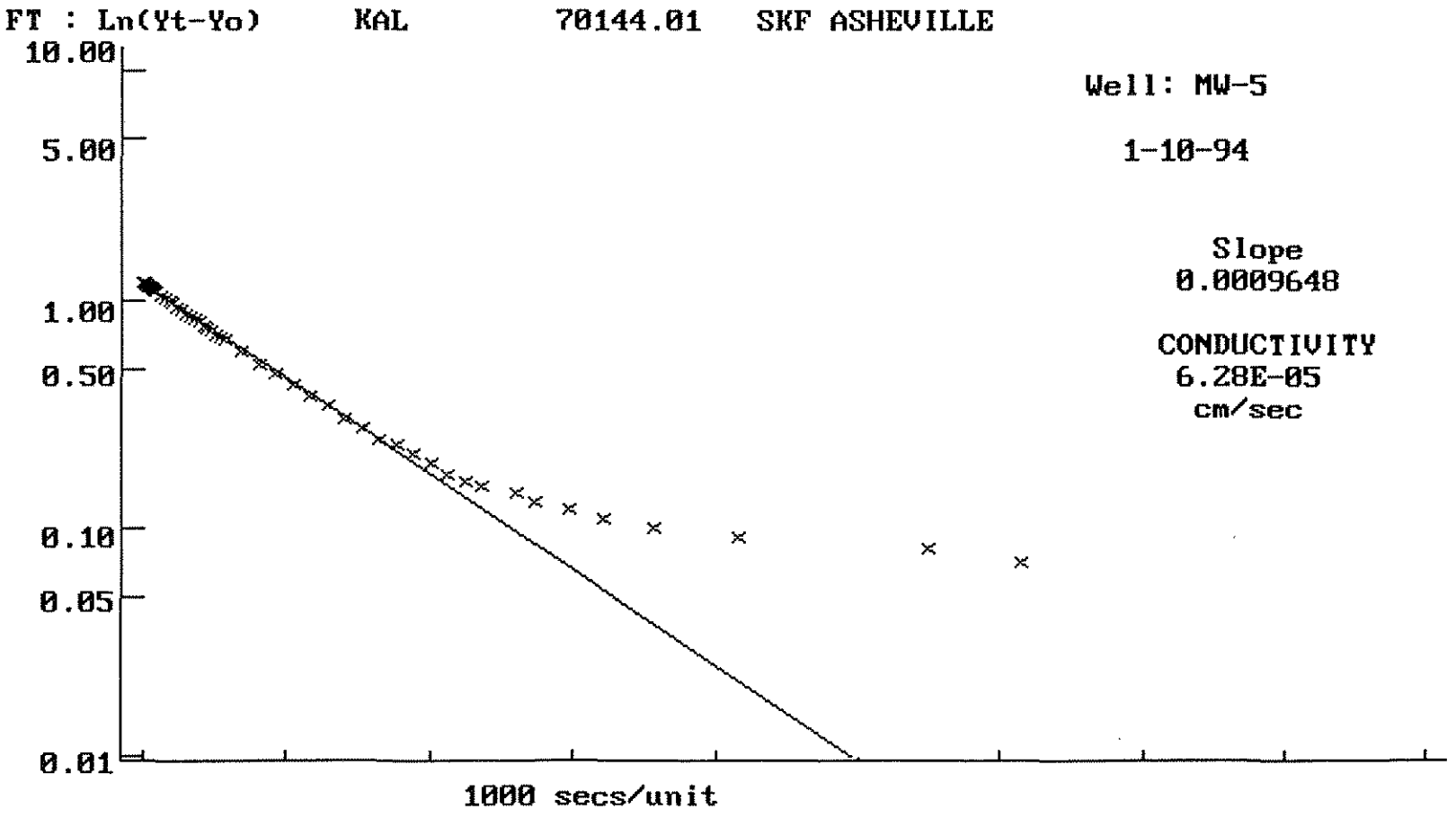
FT : Ln(Yt-Yo)
KAL
70144.01
SKF ASHEVILLE
10.00
5.00
1.00
0.50
0.10
0.05
0.01
Well: MW-5
1-10-94
Slope
0.0009648
CONDUCTIVITY
6.28E-05
cm/sec
1000 secs/unit

HYDROCON - 1.2
HYDRAULIC CONDUCTIVITY
Bouwer and Rice Method

Well: MW-6

PROJECT NAME: SKF ASHEVILLE
PROJECT NUMBER: 70144.01
FIELD WORK DATE(S): 11-18-93

USER NAME: KAL
DATE: 1-10-94

Rw - BORING RADIUS (IN): 4.2
L - SCREEN LENGTH (FT): 10
HT - SCREEN BASE TO WATER TABLE (FT): 9.02
START TIME (H,M,S): 0,0,0

Rc - WELL RADIUS (IN): 1
D - AQUIFER THICKNESS (FT): 25
STATIC WATER LEVEL (FT): 43.38

Rc was corrected for response in well screen filter material to 2.448 inches

---

TIME (H,M,S)	DEPTH (FT)
0,0,0	45.659
0,0,.24	45.548
0,0,.54	45.522
0,0,.78	45.497
0,0,1.02	45.474
0,0,1.26	45.445
0,0,1.5	45.424
0,0,1.74	45.393
0,0,2.04	45.381
0,0,2.28	45.343
0,0,2.52	45.328
0,0,2.76	45.307
0,0,3	45.297
0,0,8.28	44.944
0,0,13.26	44.671
0,0,18.24	44.47
0,0,23.28	44.3
0,0,28.26	44.17
0,0,33.24	44.08
0,0,38.28	44
0,0,43.26	43.96
0,0,48.24	43.93
0,0,53.28	43.89
0,0,58.26	43.86
0,1,3.240002	43.83
0,1,8.279999	43.82
0,1,13.26	43.81
0,1,18.24	43.8
0,1,23.28	43.78
0,1,28.26	43.77
0,1,33.24	43.76
0,1,38.28	43.75
0,1,43.26	43.74
0,2,13.25999	43.7
0,2,43.25999	43.67
0,3,13.25999	43.66
0,3,43.25999	43.64
0,4,13.25999	43.62
0,4,43.26001	43.61
0,5,13.26001	43.6
0,6,13.26001	43.58
0,6,43.14001	43.57
0,7,13.14001	43.56
0,8,13.14001	43.54
0,8,43.14001	43.53
0,9,43.14001	43.52
0,11,43.14001	43.5
0,13,43.14001	43.48
0,15,43.14001	43.46
0,17,43.14001	43.45
0,19,43.14001	43.44
0,21,43.14001	43.43
0,25,43.14001	43.42
0,31,43.14001	43.41
0,33,43.14001	43.4
0,35,43.13989	43.39
0,36,3.540039	43.4

(1/t) (ln(Yo/Yt))= 0.0018099

PARTIALLY PENETRATING: A= 2.46 B= 0.39

HYDRAULIC CONDUCTIVITY: 7.90E-06 ft/sec
2.41E-04 cm/sec

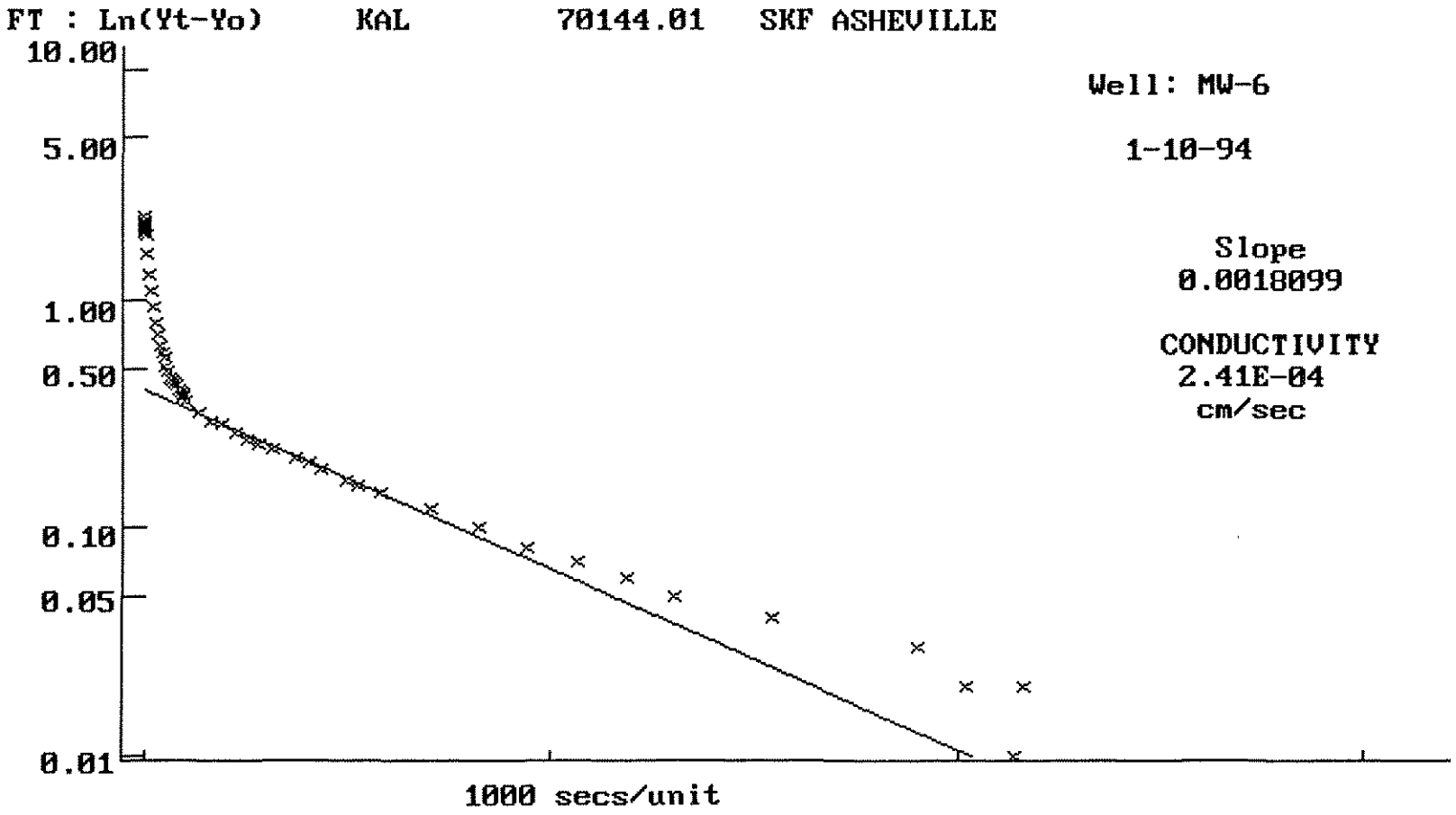
FT : Ln(Yt-Yo)
KAL
70144.01
SKF ASHEVILLE
10.00
5.00
1.00
0.50
0.10
0.05
0.01
Well: MW-6
1-10-94
Slope
0.0018099
CONDUCTIVITY
2.41E-04
cm/sec
1000 secs/unit

HYDROCON - 1.2
HYDRAULIC CONDUCTIVITY
Bouwer and Rice Method

Well: MW-7

PROJECT NAME: SKF ASHEVILLE
PROJECT NUMBER: 70144.01
FIELD WORK DATE(S): 11-18-93

USER NAME: KAL
DATE: 1-9-94

Rw - BORING RADIUS (IN): 3.53
L - SCREEN LENGTH (FT): 10
HT - SCREEN BASE TO WATER TABLE (FT): 8.41
START TIME (H,M,S): 0,0,0

Rc - WELL RADIUS (IN): 1
D - AQUIFER THICKNESS (FT): 25
STATIC WATER LEVEL (FT): 18.83

Rc was corrected for response in well screen filter material to 2.107 inches

---

TIME (H,M,S)	DEPTH (FT)	TIME (H,M,S)	DEPTH (FT)
0,31,0	18.86	0,1,29	19.19
0,26,0	18.87	0,1,25	19.2
0,21,0	18.88	0,1,21	19.21
0,16,0	18.9	0,1,19	19.22
0,14,0	18.91	0,1,15	19.23
0,13,0	18.92	0,1,12	19.24
0,11,0	18.93	0,1,5	19.25
0,10,0	18.94	0,1,2	19.26
0,9,0	18.95	0,0,59	19.27
0,8,0	18.96	0,0,56	19.28
0,7,0	18.98	0,0,54	19.29
0,6,0	18.99	0,0,52	19.3
0,5,30	19	0,0,48	19.31
0,5,0	19.01	0,0,47	19.32
0,4,30	19.03	0,0,45	19.33
0,4,0	19.04	0,0,44	19.34
0,3,30	19.05	0,0,43	19.35
0,3,25	19.06	0,0,42	19.36
0,3,10	19.07	0,0,41	19.37
0,3,0	19.08	0,0,39	19.38
0,2,50	19.09	0,0,38	19.39
0,2,40	19.1	0,0,37	19.41
0,2,30	19.11	0,0,36	19.42
0,2,10	19.12	0,0,35	19.43
0,2,5	19.13	0,0,34	19.44
0,1,55	19.14	0,0,33	19.46
0,1,50	19.15	0,0,32	19.48
0,1,45	19.16	0,0,31	19.5
0,1,40	19.17	0,0,30	19.52
0,1,35	19.18	0,0,29	19.55

TIME (H,M,S)	DEPTH (FT)	TIME (H,M,S)	DEPTH (FT)
0,0,28	19.57	0,0,8	20.43
0,0,27	19.6	0,0,7	20.49
0,0,26	19.63	0,0,6	20.55
0,0,25	19.66	0,0,5	20.62
0,0,24	19.69	0,0,4	20.68
0,0,23	19.73	0,0,3	20.75
0,0,22	19.76	0,0,2	20.83
0,0,21	19.81	0,0,1	20.91
0,0,20	19.85	0,0,0	20.96
0,0,19	19.88		
0,0,18	19.93		
0,0,17	19.98		
0,0,16	20.02		
0,0,15	20.07		
0,0,14	20.12		
0,0,13	20.17		
0,0,12	20.21		
0,0,11	20.27		
0,0,10	20.32		
0,0,9	20.38		

(1/t) (ln(Yo/Yt))= 0.0022258

PARTIALLY PENETRATING: A= 2.58 B= 0.42

HYDRAULIC CONDUCTIVITY: 7.55E-06 ft/sec
2.30E-04 cm/sec

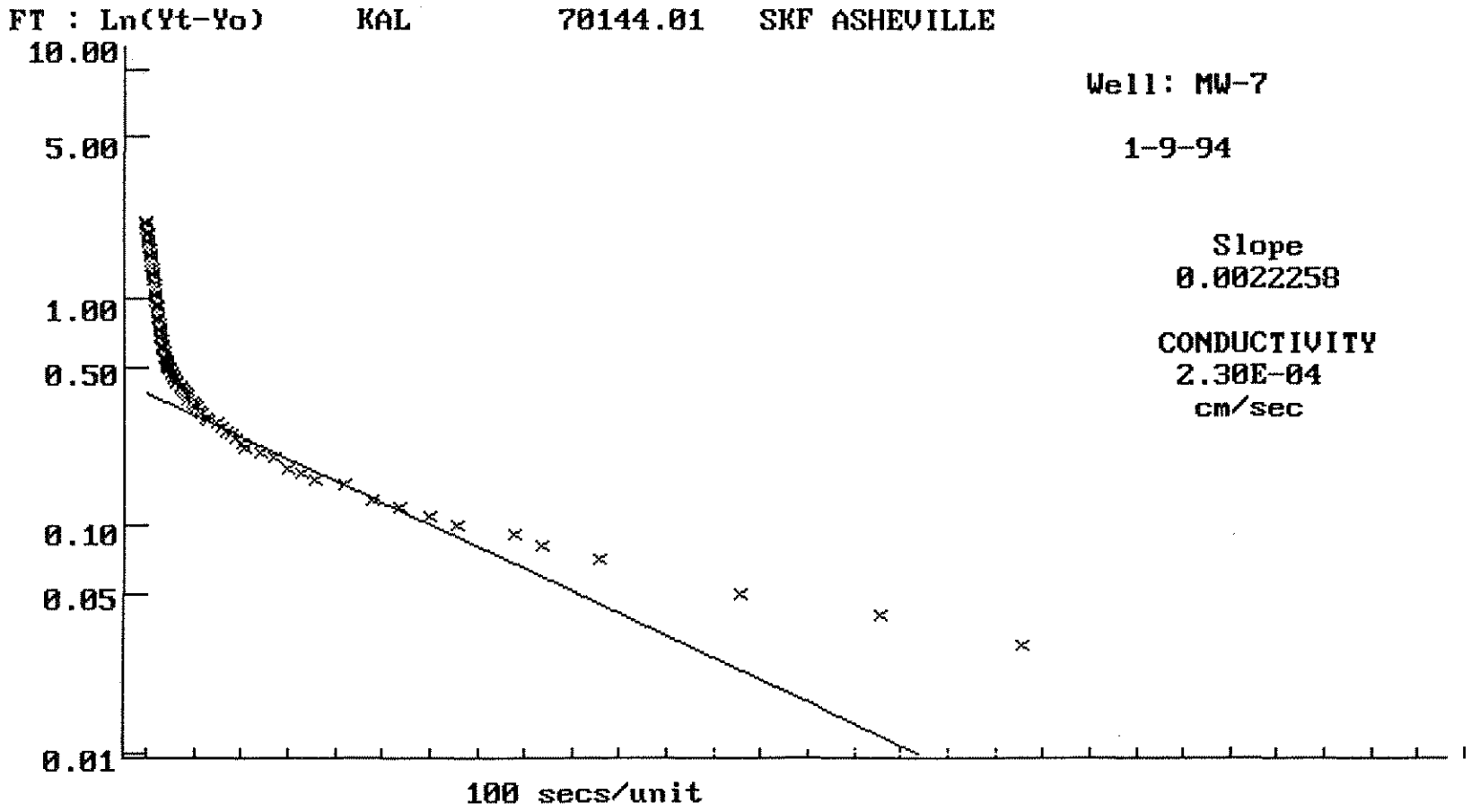
FT : Ln(Yt-Yo)
KAL
70144.01
SKF ASHEVILLE
10.00
5.00
1.00
0.50
0.10
0.05
0.01
Well: MW-7
1-9-94
Slope
0.0022258
CONDUCTIVITY
2.30E-04
cm/sec
100 secs/unit

HYDROCON - 1.2
HYDRAULIC CONDUCTIVITY
Bouwer and Rice Method

Well: MW-8

PROJECT NAME: SKF ASHEVILLE
PROJECT NUMBER: 70144.01
FIELD WORK DATE(S): 11-18-93

USER NAME: KAL
DATE: 1-9-94

Rw - BORING RADIUS (IN): 4
L - SCREEN LENGTH (FT): 10
HT - SCREEN BASE TO WATER TABLE (FT): 6.59
START TIME (H,M,S): 0,0,0

Rc - WELL RADIUS (IN): 1
D - AQUIFER THICKNESS (FT): 25
STATIC WATER LEVEL (FT): 23.3

Rc was corrected for response in well screen filter material to 2.345 inches

---

TIME (H,M,S)	DEPTH (FT)	TIME (H,M,S)	DEPTH (FT)
0,30,58	23.35	0,0,40	23.65
0,20,58	23.36	0,0,39	23.66
0,15,58	23.37	0,0,37	23.67
0,12,58	23.38	0,0,36	23.68
0,10,58	23.39	0,0,35	23.69
0,8,58	23.4	0,0,34	23.7
0,6,58	23.41	0,0,33	23.71
0,5,58	23.42	0,0,32	23.72
0,5,28	23.43	0,0,31	23.74
0,4,28	23.44	0,0,30	23.75
0,3,28	23.45	0,0,29	23.76
0,3,23	23.46	0,0,28	23.78
0,2,58	23.47	0,0,27	23.8
0,2,38	23.48	0,0,26	23.82
0,2,18	23.49	0,0,25	23.83
0,2,3	23.5	0,0,24	23.86
0,1,38	23.51	0,0,23	23.88
0,1,33	23.52	0,0,22	23.9
0,1,26	23.53	0,0,21	23.93
0,1,19	23.54	0,0,20	23.95
0,1,14	23.55	0,0,19	23.98
0,1,8	23.56	0,0,18	24.01
0,1,0	23.57	0,0,17	24.04
0,0,56	23.58	0,0,16	24.07
0,0,54	23.59	0,0,15	24.11
0,0,51	23.6	0,0,14	24.14
0,0,48	23.61	0,0,13	24.18
0,0,46	23.62	0,0,12	24.21
0,0,43	23.63	0,0,11	24.25
0,0,41	23.64	0,0,10	24.29

TIME (H,M,S)	DEPTH (FT)
0,0,9	24.33
0,0,8	24.37
0,0,7	24.41
0,0,6	24.45
0,0,5	24.5
0,0,4	24.54
0,0,3	24.58
0,0,2	24.64
0,0,1	24.7
0,0,0	24.78

(1/t) (ln(Yo/Yt))= 0.0029297

PARTIALLY PENETRATING: A= 2.50 B= 0.40

HYDRAULIC CONDUCTIVITY: 1.11E-05 ft/sec
3.37E-04 cm/sec

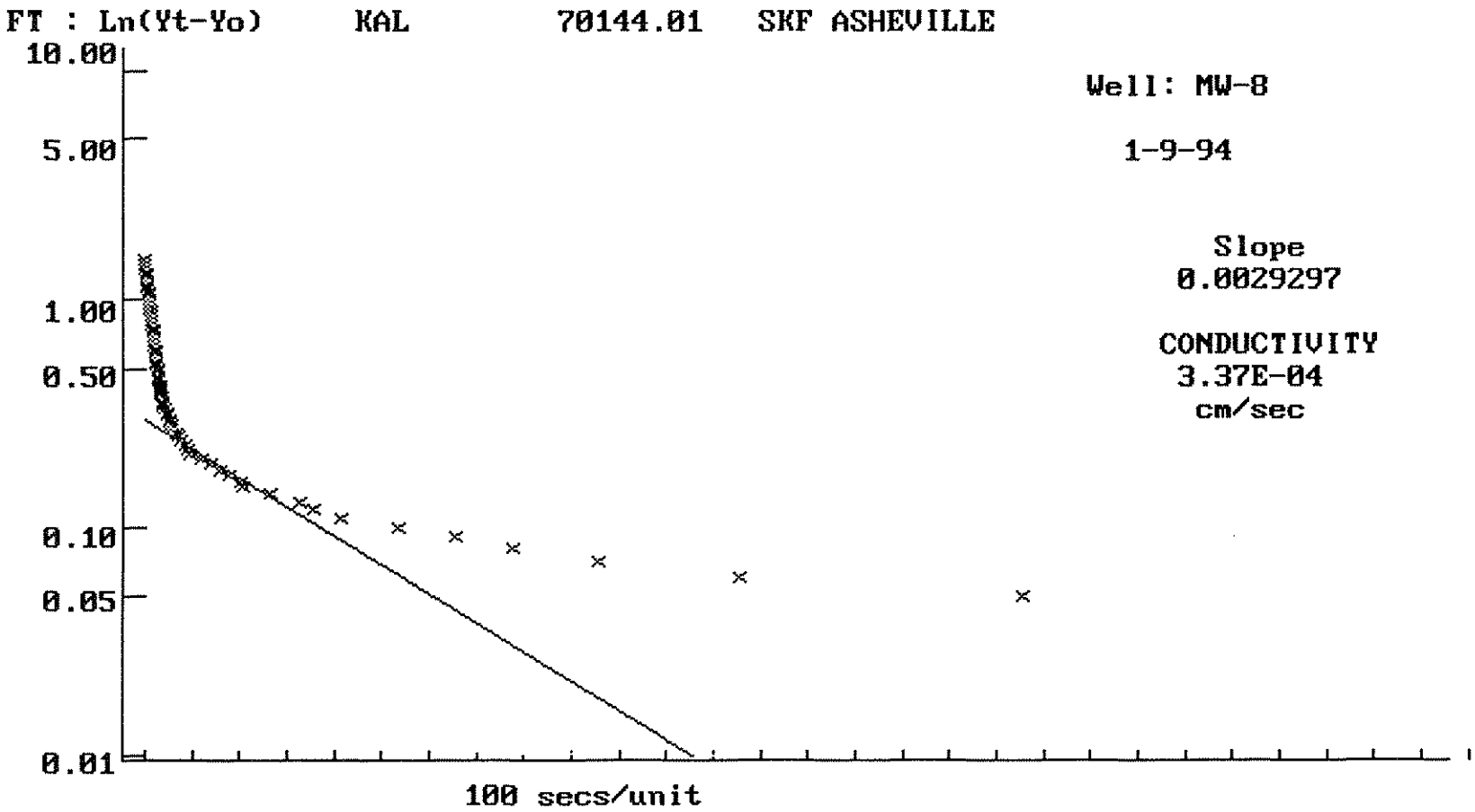
FT : Ln(Yt-Yo)
KAL
70144.01
SKF ASHEVILLE
10.00
5.00
1.00
0.50
0.10
0.05
0.01
Well: MW-8
1-9-94
Slope
0.0029297
CONDUCTIVITY
3.37E-04
cm/sec
100 secs/unit

HYDROCON - 1.2
HYDRAULIC CONDUCTIVITY
Bouwer and Rice Method

Well: MW-9

PROJECT NAME: SKF ASHEVILLE
PROJECT NUMBER: 70144.01
FIELD WORK DATE(S): 11-18-93

USER NAME: KAL
DATE: 1-10-94

Rw - BORING RADIUS (IN): 2
L - SCREEN LENGTH (FT): 10
HT - SCREEN BASE TO WATER TABLE (FT): 18.37
START TIME (H,M,S): 0,0,.48

Rc - WELL RADIUS (IN): 1
D - AQUIFER THICKNESS (FT): 25
STATIC WATER LEVEL (FT): 21.63

TIME (H,M,S)	DEPTH (FT)	TIME (H,M,S)	DEPTH (FT)
0,0,0	24.17	0,3,14.22	23.4
0,0,.48	23.99	0,3,44.22	23.34
0,0,.72	23.98	0,4,14.22	23.29
0,0,.96	23.97	0,4,44.22	23.24
0,0,1.5	23.96	0,5,14.22	23.19
0,0,1.74	23.95	0,5,44.22	23.14
0,0,3	23.94	0,6,14.22	23.09
0,0,3.48	23.93	0,6,44.10001	23.05
0,0,3.96	23.92	0,7,14.10001	23.01
0,0,9.24	23.87	0,7,44.10001	22.96
0,0,14.22	23.85	0,8,14.10001	22.93
0,0,19.2	23.82	0,8,44.09998	22.88
0,0,24.24	23.8	0,9,14.09998	22.85
0,0,29.22	23.79	0,9,44.09998	22.81
0,0,34.2	23.76	0,11,44.09998	22.68
0,0,39.24	23.75	0,13,44.09998	22.57
0,0,44.22	23.74	0,15,44.09998	22.47
0,0,49.2	23.73	0,17,44.09998	22.38
0,0,54.24	23.72	0,19,44.09998	22.29
0,0,59.22	23.7	0,21,44.09998	22.23
0,1,4.199997	23.69	0,23,44.09998	22.17
0,1,9.239998	23.67	0,25,44.09998	22.12
0,1,14.22	23.66	0,27,44.09998	22.07
0,1,19.2	23.65	0,29,44.09998	22.03
0,1,24.24	23.63	0,31,44.09998	21.99
0,1,29.22	23.62	0,33,44.09998	21.96
0,1,34.2	23.61	0,35,44.1001	21.93
0,1,44.22	23.59	0,37,44.1001	21.91
0,2,14.22	23.52	0,39,44.1001	21.88
0,2,44.22	23.46	0,41,44.1001	21.86

TIME (H,M,S)	DEPTH (FT)
0,43,44.1001	21.85
0,45,44.1001	21.83
0,47,44.1001	21.81
0,49,44.1001	21.8
0,55,44.1001	21.79
0,57,44.1001	21.78
0,59,59.69995	21.77

(1/t) (ln(Yo/Yt))= 0.0010165

PARTIALLY PENETRATING: A= 3.30 B= 0.57

HYDRAULIC CONDUCTIVITY: 1.09E-06 ft/sec
3.32E-05 cm/sec

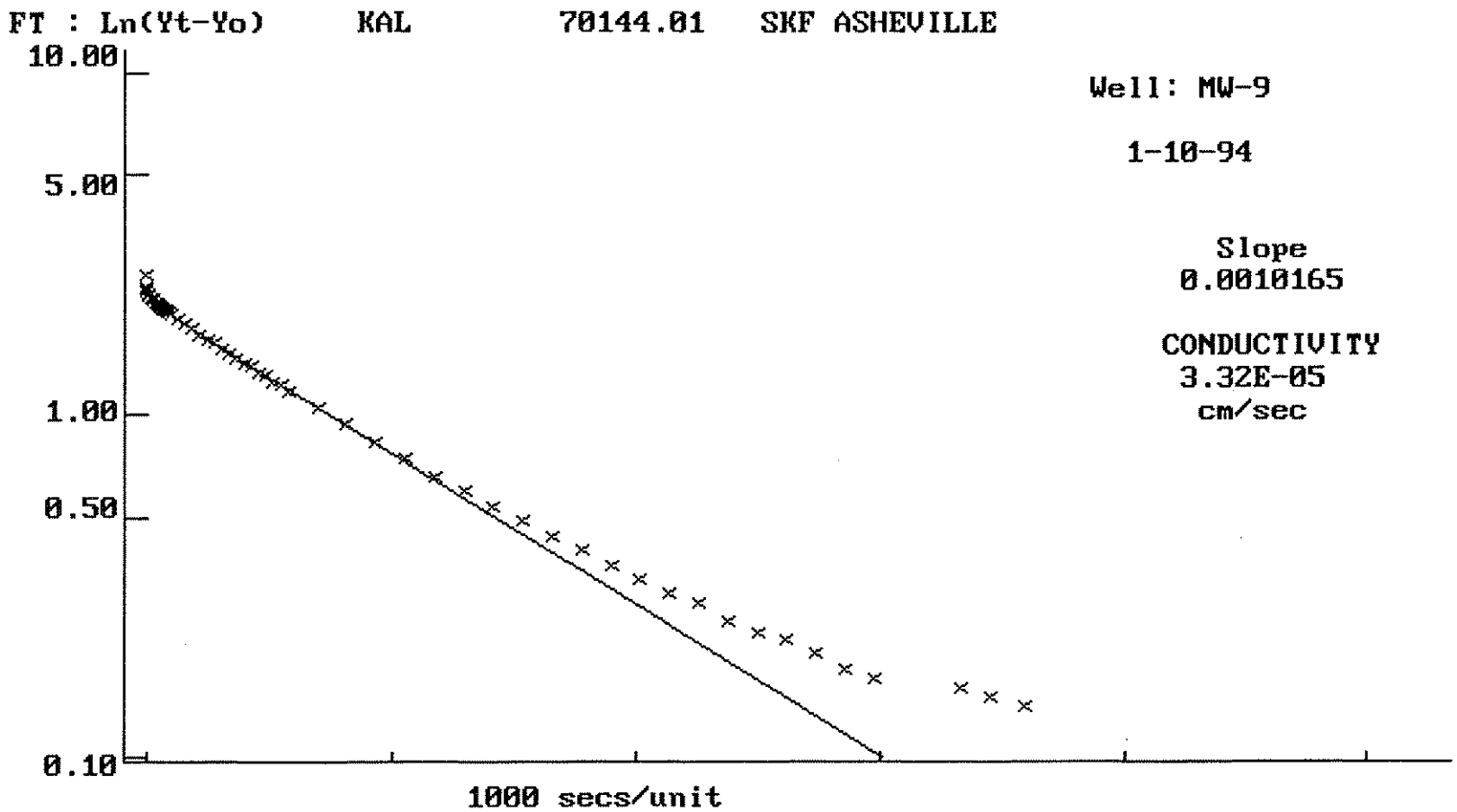
FT : Ln(Yt-Yo)
KAL
70144.01
SKF ASHEVILLE
10.00
5.00
1.00
0.50
0.10
1000 secs/unit
Well: MW-9
1-10-94
Slope
0.0010165
CONDUCTIVITY
3.32E-05
cm/sec

HYDROCON - 1.2
HYDRAULIC CONDUCTIVITY
Bouwer and Rice Method

Well: MW-10

PROJECT NAME: SKF ASHEVILLE
PROJECT NUMBER: 70144.01
FIELD WORK DATE(S): 11-18-93

USER NAME: KAL
DATE: 1-9-94

Rw - BORING RADIUS (IN): 2.89
L - SCREEN LENGTH (FT): 10
HT - SCREEN BASE TO WATER TABLE (FT): 6.75
START TIME (H,M,S): 0,0,0

Rc - WELL RADIUS (IN): 1
D - AQUIFER THICKNESS (FT): 6.75
STATIC WATER LEVEL (FT): 25.91

Rc was corrected for response in well screen filter material to 1.790 inches

---

TIME (H,M,S)	DEPTH (FT)	TIME (H,M,S)	DEPTH (FT)
0,40,59	26.18	0,0,33	26.51
0,35,59	26.2	0,0,32	26.53
0,20,59	26.21	0,0,31	26.54
0,15,59	26.22	0,0,30	26.56
0,13,59	26.23	0,0,29	26.58
0,6,59	26.24	0,0,28	26.61
0,5,59	26.25	0,0,27	26.62
0,4,29	26.26	0,0,26	26.65
0,3,59	26.27	0,0,25	26.68
0,3,14	26.28	0,0,24	26.7
0,2,44	26.29	0,0,23	26.73
0,1,59	26.3	0,0,22	26.75
0,1,49	26.31	0,0,21	26.79
0,1,34	26.32	0,0,20	26.81
0,1,27	26.33	0,0,19	26.85
0,1,18	26.34	0,0,18	26.88
0,1,11	26.35	0,0,17	26.92
0,1,6	26.36	0,0,16	26.95
0,0,57	26.37	0,0,15	26.99
0,0,54	26.38	0,0,14	27.02
0,0,51	26.39	0,0,13	27.06
0,0,48	26.4	0,0,12	27.09
0,0,46	26.41	0,0,11	27.13
0,0,44	26.42	0,0,10	27.17
0,0,41	26.43	0,0,9	27.21
0,0,40	26.44	0,0,8	27.25
0,0,38	26.45	0,0,7	27.29
0,0,37	26.47	0,0,6	27.33
0,0,36	26.48	0,0,5	27.38
0,0,35	26.49	0,0,4	27.42

TIME (H,M,S)	DEPTH (FT)
0,0,3	27.47
0,0,2	27.51
0,0,1	27.57
0,0,0	27.64

(1/t) (ln(Yo/Yt))= 0.0002623

FULLY PENETRATING: C= 2.53

HYDRAULIC CONDUCTIVITY: 7.47E-07 ft/sec
2.28E-05 cm/sec

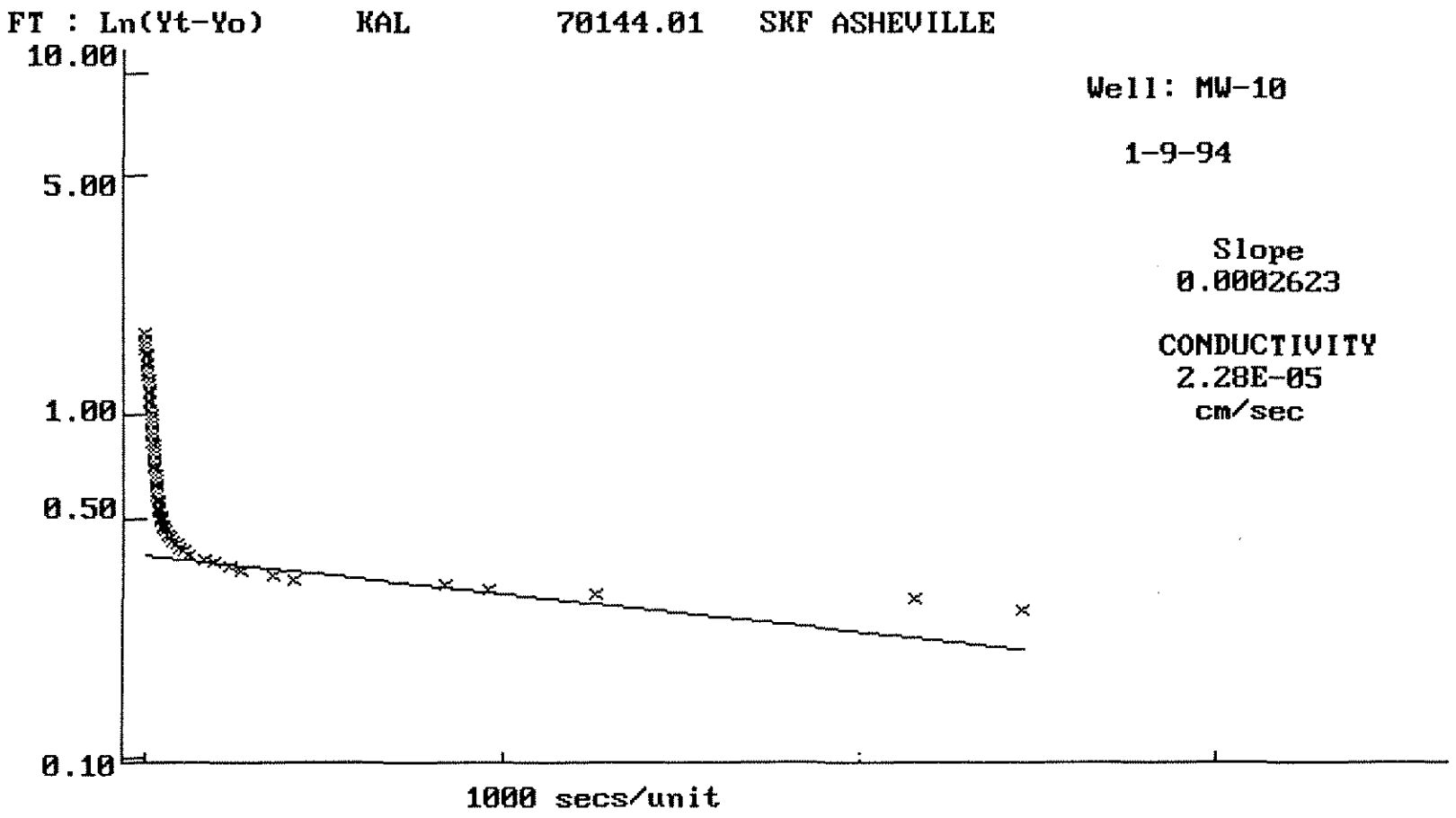
FT : Ln(Yt-Yo)
KAL
70144.01
SKF ASHEVILLE
10.00
5.00
1.00
0.50
0.10
1000 secs/unit
Well: MW-10
1-9-94
Slope
0.0002623
CONDUCTIVITY
2.28E-05
cm/sec

HYDROCON - 1.2
HYDRAULIC CONDUCTIVITY
Bouwer and Rice Method

Well: MW-11

PROJECT NAME: SKF-ASHEVILLE
PROJECT NUMBER: 70144.01
FIELD WORK DATE(S): 11-17-93

USER NAME: KAL
DATE: 1-9-94

Rw - BORING RADIUS (IN): 2.21
L - SCREEN LENGTH (FT): 20
HT - SCREEN BASE TO WATER TABLE (FT): 19.59
START TIME (H,M,S): 0,0,0

Rc - WELL RADIUS (IN): 1
D - AQUIFER THICKNESS (FT): 100
STATIC WATER LEVEL (FT): 62.76

Rc was corrected for response in well screen filter material to 1.471 inches

---

TIME (H,M,S)	DEPTH (FT)	TIME (H,M,S)	DEPTH (FT)
1,55,43	63.14	0,2,58	63.83
1,50,43	63.15	0,2,53	63.84
1,45,43	63.16	0,2,43	63.85
1,40,43	63.17	0,2,33	63.86
1,30,43	63.19	0,2,28	63.87
1,25,43	63.2	0,1,48	63.93
1,20,43	63.22	0,1,43	63.94
1,15,43	63.23	0,1,33	63.96
1,10,43	63.24	0,1,28	63.98
1,5,43	63.26	0,1,23	63.99
1,0,43	63.28	0,1,18	64
0,55,43	63.3	0,1,13	64.03
0,50,43	63.32	0,1,11	64.04
0,20,43	63.5	0,1,9	64.05
0,15,43	63.55	0,0,59	64.1
0,14,43	63.56	0,0,57	64.11
0,13,43	63.57	0,0,56	64.12
0,12,43	63.59	0,0,55	64.13
0,11,43	63.61	0,0,53	64.14
0,10,43	63.62	0,0,52	64.15
0,9,43	63.64	0,0,51	64.16
0,8,43	63.66	0,0,50	64.17
0,7,43	63.68	0,0,49	64.18
0,6,43	63.7	0,0,48	64.19
0,5,43	63.73	0,0,46	64.2
0,5,13	63.75	0,0,45	64.22
0,4,43	63.76	0,0,44	64.23
0,4,13	63.78	0,0,43	64.24
0,3,43	63.8	0,0,42	64.25
0,3,13	63.82	0,0,41	64.26

TIME (H,M,S)	DEPTH (FT)	TIME (H,M,S)	DEPTH (FT)
0,0,40	64.27	0,0,19	64.67
0,0,39	64.29	0,0,18	64.7
0,0,38	64.31	0,0,17	64.73
0,0,37	64.32	0,0,16	64.76
0,0,36	64.33	0,0,15	64.78
0,0,35	64.35	0,0,14	64.82
0,0,34	64.36	0,0,13	64.84
0,0,33	64.38	0,0,12	64.88
0,0,31	64.41	0,0,11	64.9
0,0,30	64.44	0,0,10	64.94
0,0,29	64.45	0,0,9	64.97
0,0,28	64.47	0,0,8	65.01
0,0,27	64.49	0,0,7	65.03
0,0,26	64.51	0,0,6	65.07
0,0,25	64.53	0,0,5	65.09
0,0,24	64.55	0,0,4	65.13
0,0,23	64.58	0,0,3	65.17
0,0,22	64.6	0,0,2	65.22
0,0,21	64.63	0,0,1	65.28
0,0,20	64.64	0,0,0	65.3

(1/t) (ln(Yo/Yt))= 0.0003231

PARTIALLY PENETRATING: A= 4.57 B= 0.77

HYDRAULIC CONDUCTIVITY: 3.78E-07 ft/sec
1.15E-05 cm/sec

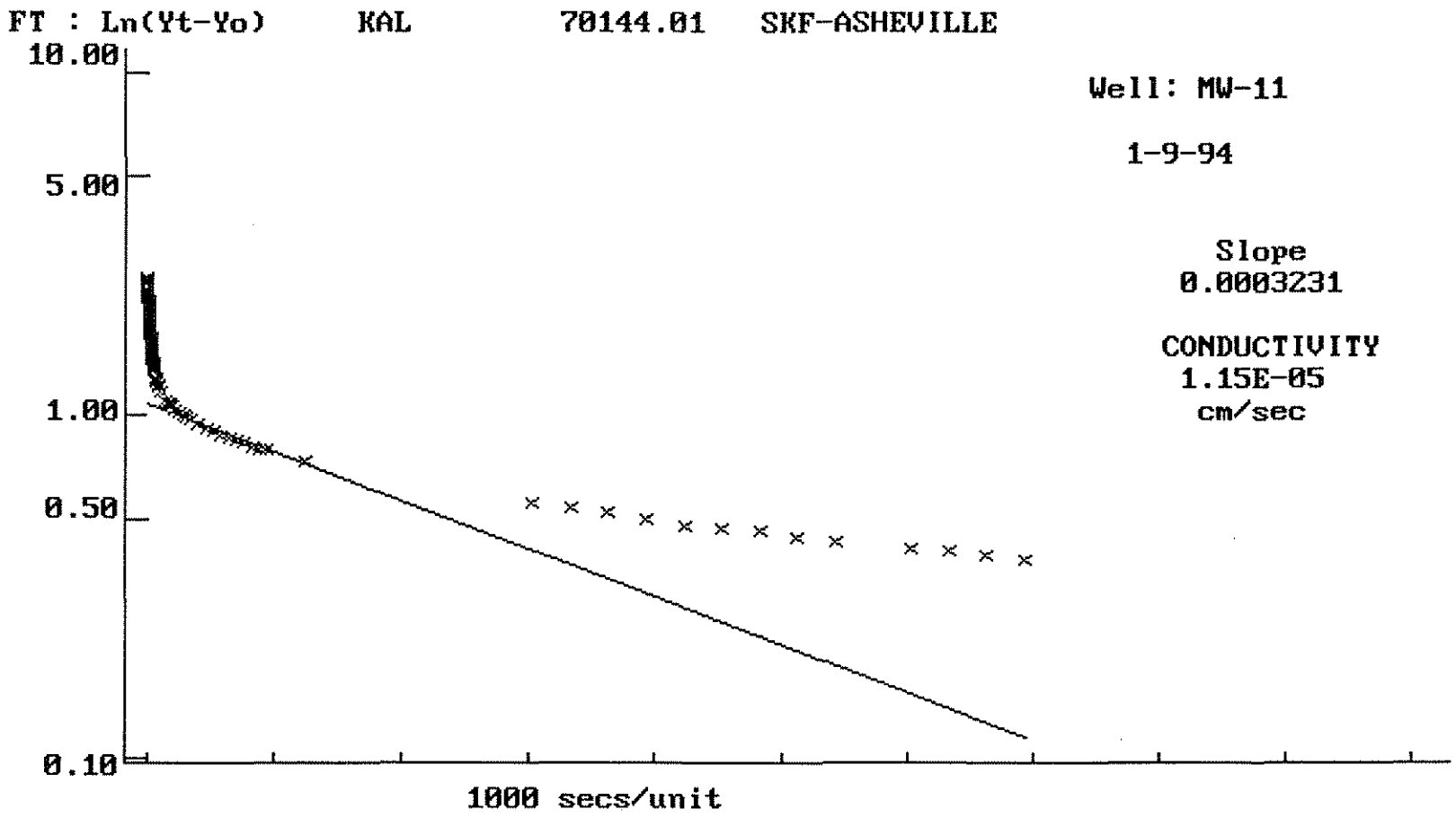
FT : Ln(Yt-Yo)
KAL
70144.01
SKF-ASHEVILLE
10.00
5.00
1.00
0.50
0.10
1000 secs/unit
Well: MW-11
1-9-94
Slope
0.0003231
CONDUCTIVITY
1.15E-05
cm/sec

HYDROCON - 1.2
HYDRAULIC CONDUCTIVITY
Bouwer and Rice Method

Well: MW-12

PROJECT NAME: SKF ASHEVILLE
PROJECT NUMBER: 70144.01
FIELD WORK DATE(S): 11-17-93

USER NAME: KAL
DATE: 1-14-94

Rw - BORING RADIUS (IN): 3
L - SCREEN LENGTH (FT): 9.715
HT - SCREEN BASE TO WATER TABLE (FT): 18.65
START TIME (H,M,S): 0,0,0

Rc - WELL RADIUS (IN): 1
D - AQUIFER THICKNESS (FT): 100
STATIC WATER LEVEL (FT): 10.7

TIME (H,M,S)	DEPTH (FT)	TIME (H,M,S)	DEPTH (FT)
0,50,59	10.81	0,2,39	12.15
0,40,59	10.82	0,2,34	12.16
0,35,59	10.83	0,2,29	12.18
0,30,59	10.84	0,2,19	12.2
0,25,59	10.89	0,2,14	12.21
0,20,59	10.95	0,2,9	12.23
0,15,59	11.07	0,2,4	12.24
0,14,59	11.1	0,1,59	12.25
0,13,59	11.15	0,1,54	12.27
0,12,59	11.19	0,1,49	12.29
0,11,59	11.24	0,1,44	12.3
0,10,59	11.29	0,1,39	12.31
0,9,59	11.35	0,1,34	12.33
0,8,59	11.43	0,1,29	12.35
0,7,59	11.51	0,1,27	12.36
0,6,59	11.6	0,1,24	12.37
0,5,59	11.71	0,1,19	12.38
0,5,29	11.76	0,1,16	12.39
0,4,59	11.82	0,1,14	12.4
0,4,29	11.88	0,1,11	12.41
0,3,59	11.95	0,1,8	12.42
0,3,29	12.02	0,1,5	12.43
0,3,24	12.03	0,1,1	12.44
0,3,19	12.05	0,0,58	12.45
0,3,9	12.07	0,0,55	12.46
0,3,4	12.08	0,0,53	12.47
0,2,59	12.1	0,0,50	12.48
0,2,54	12.11	0,0,48	12.49
0,2,49	12.11	0,0,46	12.5
0,2,44	12.13	0,0,41	12.51

TIME (H,M,S)	DEPTH (FT)	TIME (H,M,S)	DEPTH (FT)
0,0,38	12.52	0,0,7	12.9
0,0,36	12.53	0,0,6	12.96
0,0,34	12.54	0,0,5	13.03
0,0,31	12.55	0,0,4	13.13
0,0,29	12.56	0,0,3	13.22
0,0,25	12.57	0,0,2	13.35
0,0,23	12.58	0,0,1	13.48
0,0,22	12.59	0,0,0	13.62
0,0,20	12.6		
0,0,19	12.61		
0,0,18	12.62		
0,0,16	12.64		
0,0,15	12.65		
0,0,14	12.67		
0,0,13	12.69		
0,0,12	12.71		
0,0,11	12.74		
0,0,10	12.76		
0,0,9	12.81		
0,0,8	12.85		

(1/t) (ln(Yo/Yt))= 0.0016923

PARTIALLY PENETRATING: A= 2.72 B= 0.46

HYDRAULIC CONDUCTIVITY: 1.54E-06 ft/sec
4.68E-05 cm/sec

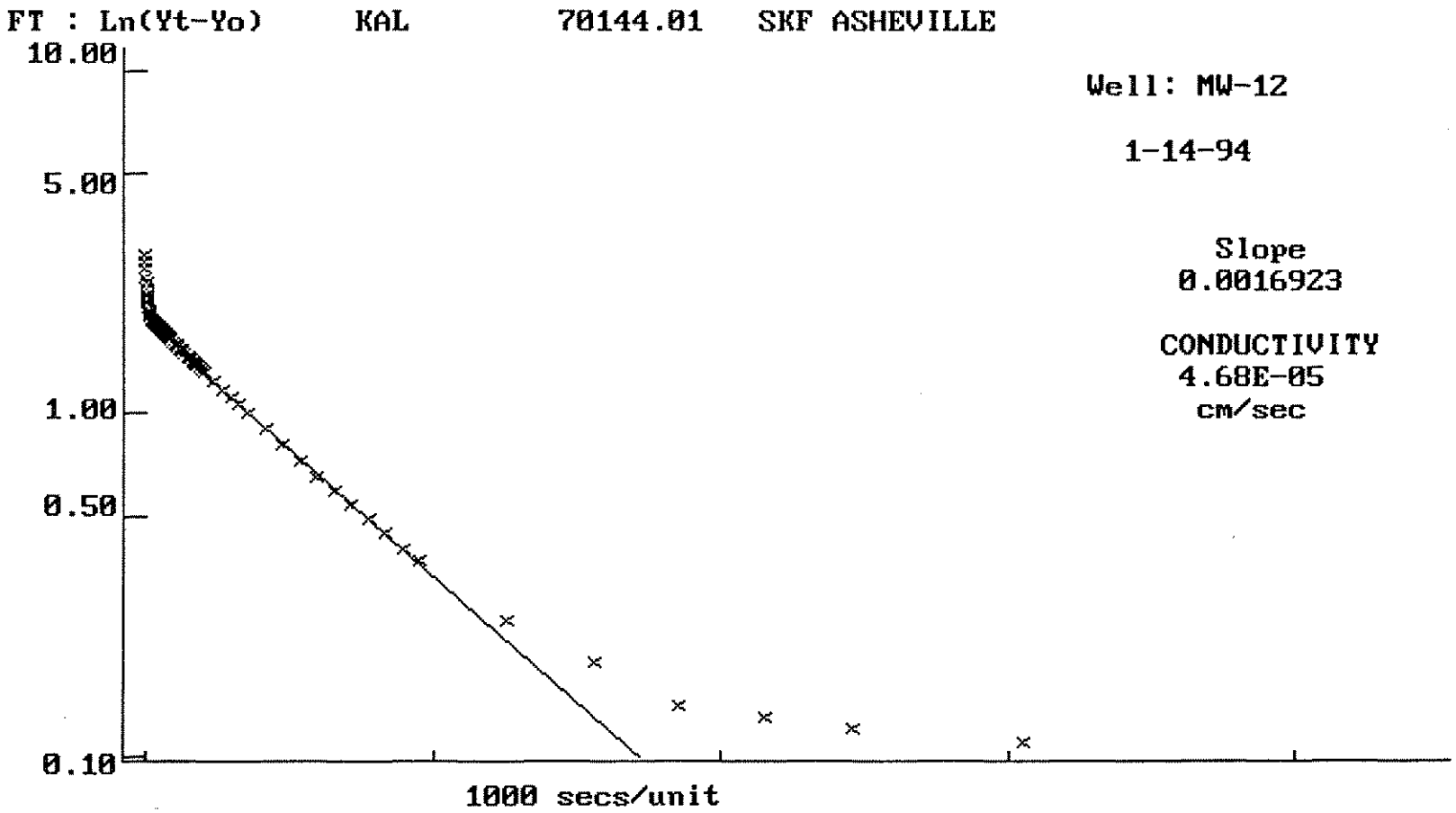
FT : Ln(Yt-Yo)
KAL
70144.01
SKF ASHEVILLE
10.00
5.00
1.00
0.50
0.10
1000 secs/unit
Well: MW-12
1-14-94
Slope
0.0016923
CONDUCTIVITY
4.68E-05
cm/sec

HYDROCON - 1.2
HYDRAULIC CONDUCTIVITY
Bouwer and Rice Method

Well: MW-13

PROJECT NAME: SKF ASHEVILLE
PROJECT NUMBER: 70144.01
FIELD WORK DATE(S): 11-16-93

USER NAME: KAL
DATE: 12-21-1993

Rw - BORING RADIUS (IN): 4.67
L - SCREEN LENGTH (FT): 9.71
HT - SCREEN BASE TO WATER TABLE (FT): 5.86
START TIME (H,M,S): 0,0,0

Rc - WELL RADIUS (IN): 1
D - AQUIFER THICKNESS (FT): 5.86
STATIC WATER LEVEL (FT): 13.84

Rc was corrected for response in well screen filter material to 2.691 inches

---

TIME (H,M,S)	DEPTH (FT)
0,3,22	13.87
0,2,22	13.88
0,1,47	13.89
0,1,22	13.9
0,1,8	13.91
0,0,53	13.92
0,0,36	13.93
0,0,31	13.94
0,0,27	13.95
0,0,23	13.96
0,0,21	13.97
0,0,19	13.98
0,0,16	13.99
0,0,14	14
0,0,13	14.01
0,0,12	14.03
0,0,11	14.05
0,0,10	14.06
0,0,9	14.08
0,0,8	14.11
0,0,7	14.15
0,0,6	14.19
0,0,5	14.24
0,0,4	14.32
0,0,3	14.41
0,0,2	14.53
0,0,1	14.69
0,0,0	15

(1/t) (ln(Yo/Yt))= 0.0256957

FULLY PENETRATING: C= 1.90

HYDRAULIC CONDUCTIVITY: 1.38E-04 ft/sec
4.21E-03 cm/sec

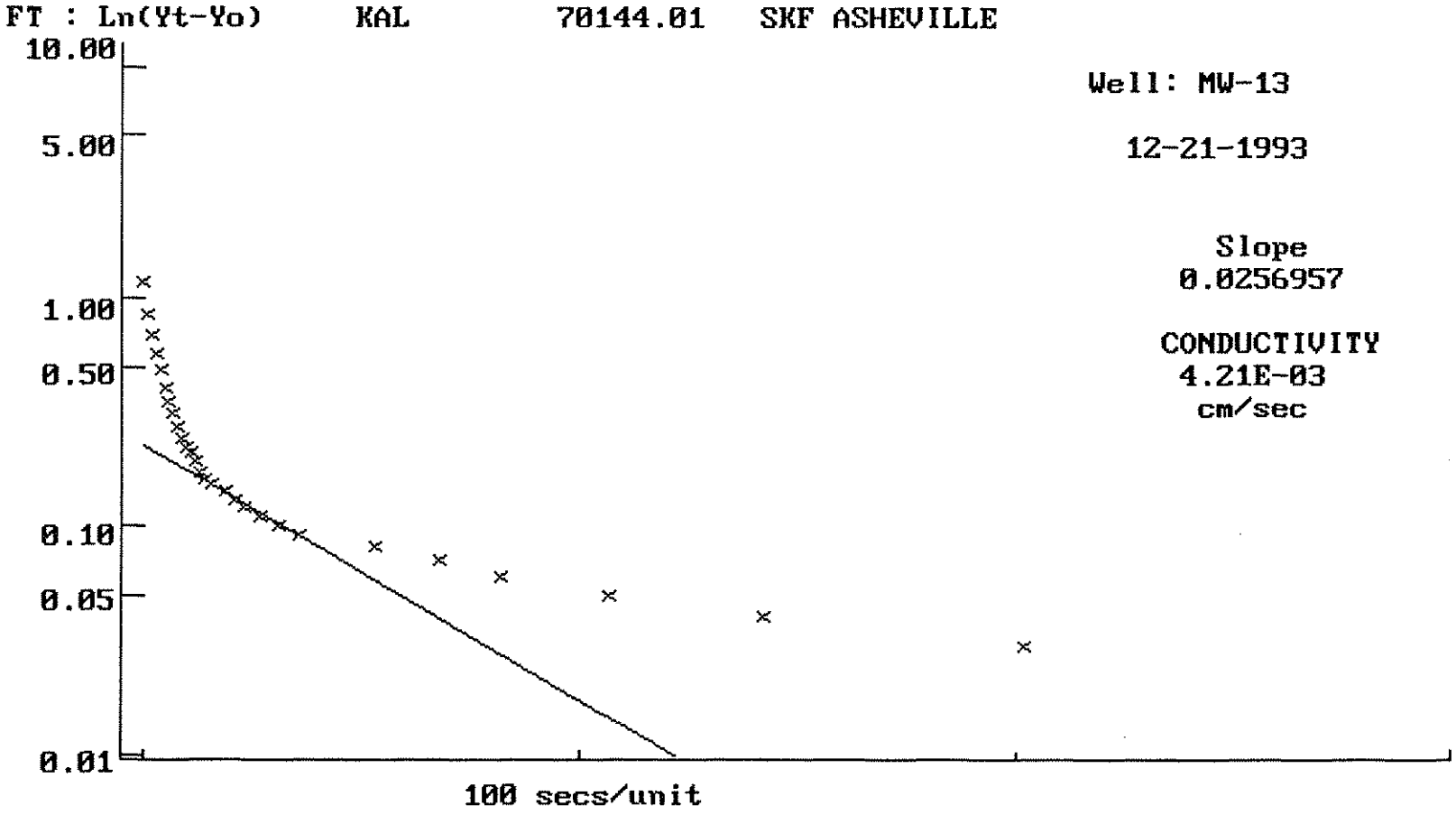
FT : Ln(Yt-Yo)
KAL
70144.01
SKF ASHEVILLE
10.00
5.00
1.00
0.50
0.10
0.05
0.01
Well: MW-13
12-21-1993
Slope
0.0256957
CONDUCTIVITY
4.21E-03
cm/sec
100 secs/unit

HYDROCON - 1.2
HYDRAULIC CONDUCTIVITY
Bouwer and Rice Method

Well: MW-14

PROJECT NAME: SKF ASHEVILLE
PROJECT NUMBER: 70144.01
FIELD WORK DATE(S): 11-17-93

USER NAME: KAL
DATE: 1-9-94

Rw - BORING RADIUS (IN): 2.59
L - SCREEN LENGTH (FT): 15
HT - SCREEN BASE TO WATER TABLE (FT): 12.34
START TIME (H,M,S): 0,0,0

Rc - WELL RADIUS (IN): 1
D - AQUIFER THICKNESS (FT): 100
STATIC WATER LEVEL (FT): 67.81

Rc was corrected for response in well screen filter material to 1.647 inches

---

TIME (H,M,S)	DEPTH (FT)	TIME (H,M,S)	DEPTH (FT)
0,40,58	67.92	0,1,26	68.26
0,35,58	67.93	0,1,22	68.27
0,25,58	67.94	0,1,18	68.28
0,20,58	67.95	0,1,14	68.29
0,15,58	67.97	0,1,9	68.3
0,14,58	67.98	0,1,2	68.31
0,11,58	67.99	0,0,59	68.32
0,10,58	68	0,0,56	68.33
0,9,58	68.01	0,0,53	68.34
0,8,58	68.03	0,0,50	68.35
0,7,58	68.04	0,0,48	68.36
0,6,58	68.05	0,0,44	68.37
0,5,58	68.06	0,0,41	68.38
0,5,28	68.08	0,0,39	68.39
0,4,58	68.09	0,0,38	68.4
0,4,28	68.1	0,0,36	68.41
0,3,58	68.11	0,0,34	68.42
0,3,28	68.13	0,0,32	68.43
0,3,18	68.14	0,0,30	68.44
0,3,8	68.15	0,0,29	68.45
0,2,58	68.16	0,0,28	68.46
0,2,43	68.17	0,0,27	68.47
0,2,28	68.18	0,0,26	68.48
0,2,18	68.19	0,0,25	68.49
0,2,8	68.2	0,0,23	68.5
0,2,3	68.21	0,0,22	68.51
0,1,58	68.22	0,0,21	68.53
0,1,48	68.23	0,0,20	68.54
0,1,38	68.24	0,0,19	68.55
0,1,33	68.25	0,0,18	68.57

TIME (H,M,S)	DEPTH (FT)
0,0,17	68.59
0,0,16	68.61
0,0,15	68.62
0,0,14	68.64
0,0,13	68.67
0,0,12	68.69
0,0,11	68.72
0,0,10	68.75
0,0,9	68.8
0,0,8	68.83
0,0,7	68.87
0,0,6	68.93
0,0,5	68.99
0,0,4	69.05
0,0,3	69.13
0,0,2	69.22
0,0,1	69.32
0,0,0	69.52

(1/t) (ln(Yo/Yt))= 0.0023412

PARTIALLY PENETRATING: A= 3.58 B= 0.63

HYDRAULIC CONDUCTIVITY: 3.89E-06 ft/sec
1.19E-04 cm/sec

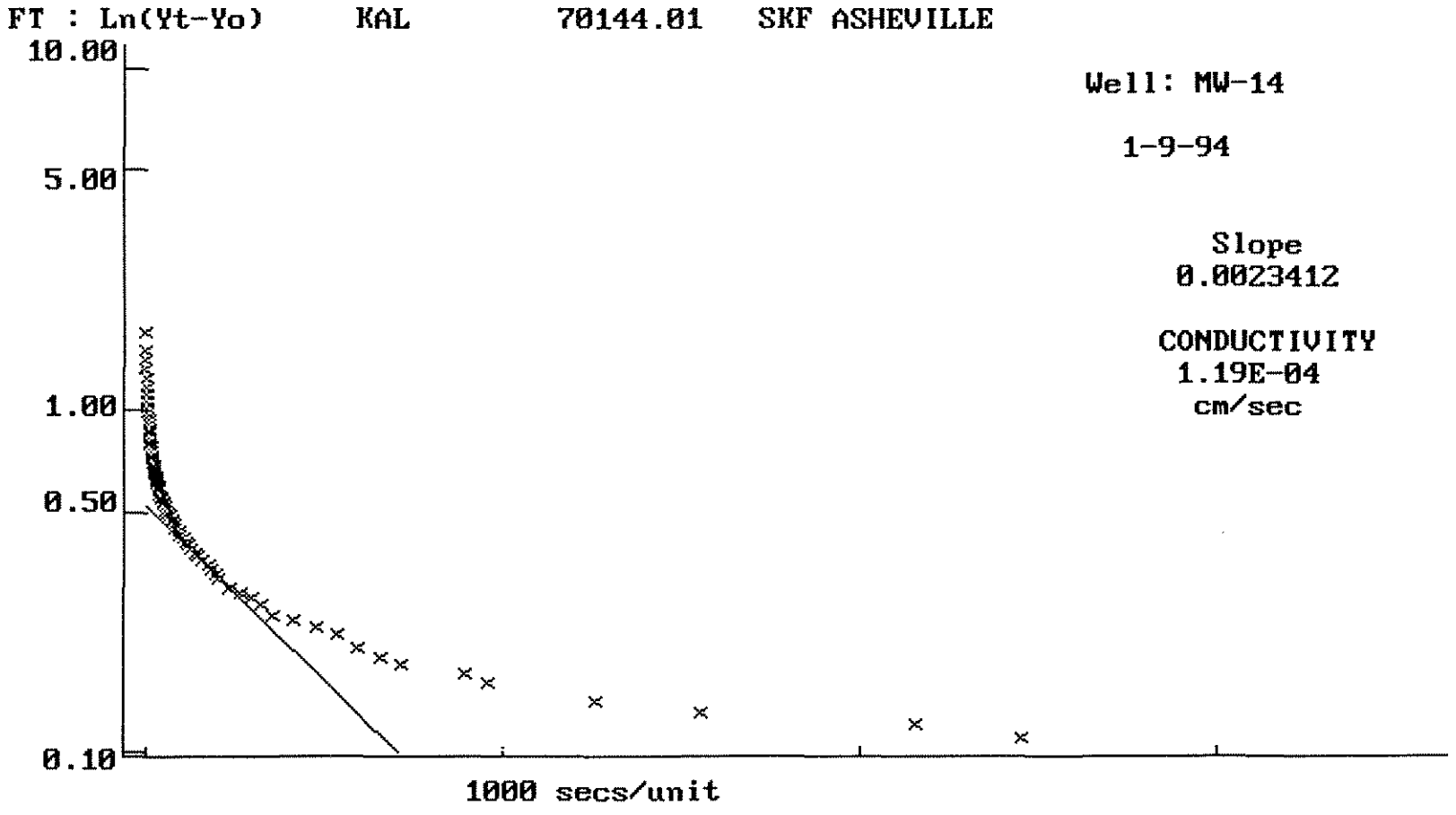
FT : Ln(Yt-Yo)
KAL
70144.01
SKF ASHEVILLE
10.00
5.00
1.00
0.50
0.10
Well: MW-14
1-9-94
Slope
0.0023412
CONDUCTIVITY
1.19E-04
cm/sec
1000 secs/unit

HYDROCON - 1.2
HYDRAULIC CONDUCTIVITY
Bouwer and Rice Method

Well: MW-15

PROJECT NAME: SKF ASHEVILLE
PROJECT NUMBER: 70144.01
FIELD WORK DATE(S): 11-15-93

USER NAME: KAL
DATE: 1-9-94

Rw - BORING RADIUS (IN): 4.28
L - SCREEN LENGTH (FT): 20
HT - SCREEN BASE TO WATER TABLE (FT): 19.24
START TIME (H,M,S): 0,0,0

Rc - WELL RADIUS (IN): 1
D - AQUIFER THICKNESS (FT): 52.44
STATIC WATER LEVEL (FT): 12.56

Rc was corrected for response in well screen filter material to 2.489 inches

---

TIME (H,M,S)	DEPTH (FT)	TIME (H,M,S)	DEPTH (FT)
0,5,58	12.63	0,1,3	12.96
0,5,28	12.64	0,1,2	12.97
0,4,28	12.65	0,1,0	12.98
0,3,58	12.67	0,0,59	12.99
0,3,28	12.68	0,0,58	13
0,3,23	12.69	0,0,56	13.01
0,3,13	12.7	0,0,55	13.02
0,3,3	12.71	0,0,54	13.03
0,2,53	12.72	0,0,53	13.04
0,2,48	12.73	0,0,52	13.05
0,2,38	12.74	0,0,51	13.06
0,2,23	12.75	0,0,49	13.08
0,2,18	12.76	0,0,48	13.09
0,2,13	12.77	0,0,47	13.11
0,2,8	12.78	0,0,46	13.12
0,2,3	12.79	0,0,45	13.13
0,1,58	12.8	0,0,44	13.15
0,1,53	12.81	0,0,43	13.17
0,1,43	12.82	0,0,42	13.19
0,1,38	12.84	0,0,41	13.2
0,1,33	12.85	0,0,40	13.22
0,1,28	12.87	0,0,39	13.24
0,1,22	12.88	0,0,38	13.26
0,1,19	12.89	0,0,37	13.29
0,1,16	12.9	0,0,36	13.31
0,1,14	12.91	0,0,35	13.33
0,1,12	12.92	0,0,34	13.36
0,1,10	12.93	0,0,33	13.38
0,1,8	12.94	0,0,32	13.4
0,1,5	12.95	0,0,31	13.43

TIME (H,M,S)	DEPTH (FT)	TIME (H,M,S)	DEPTH (FT)
0,0,30	13.45	0,0,10	14.19
0,0,29	13.49	0,0,9	14.24
0,0,28	13.51	0,0,8	14.29
0,0,27	13.54	0,0,7	14.35
0,0,26	13.58	0,0,6	14.41
0,0,25	13.6	0,0,5	14.47
0,0,24	13.64	0,0,4	14.54
0,0,23	13.67	0,0,3	14.62
0,0,22	13.7	0,0,2	14.72
0,0,21	13.74	0,0,1	14.85
0,0,20	13.77	0,0,0	15.16
0,0,19	13.81		
0,0,18	13.84		
0,0,17	13.89		
0,0,16	13.92		
0,0,15	13.96		
0,0,14	14.01		
0,0,13	14.05		
0,0,12	14.09		
0,0,11	14.14		

(1/t) (ln(Yo/Yt))= 0.0080997

PARTIALLY PENETRATING: A= 3.22 B= 0.55

HYDRAULIC CONDUCTIVITY: 2.30E-05 ft/sec
7.02E-04 cm/sec

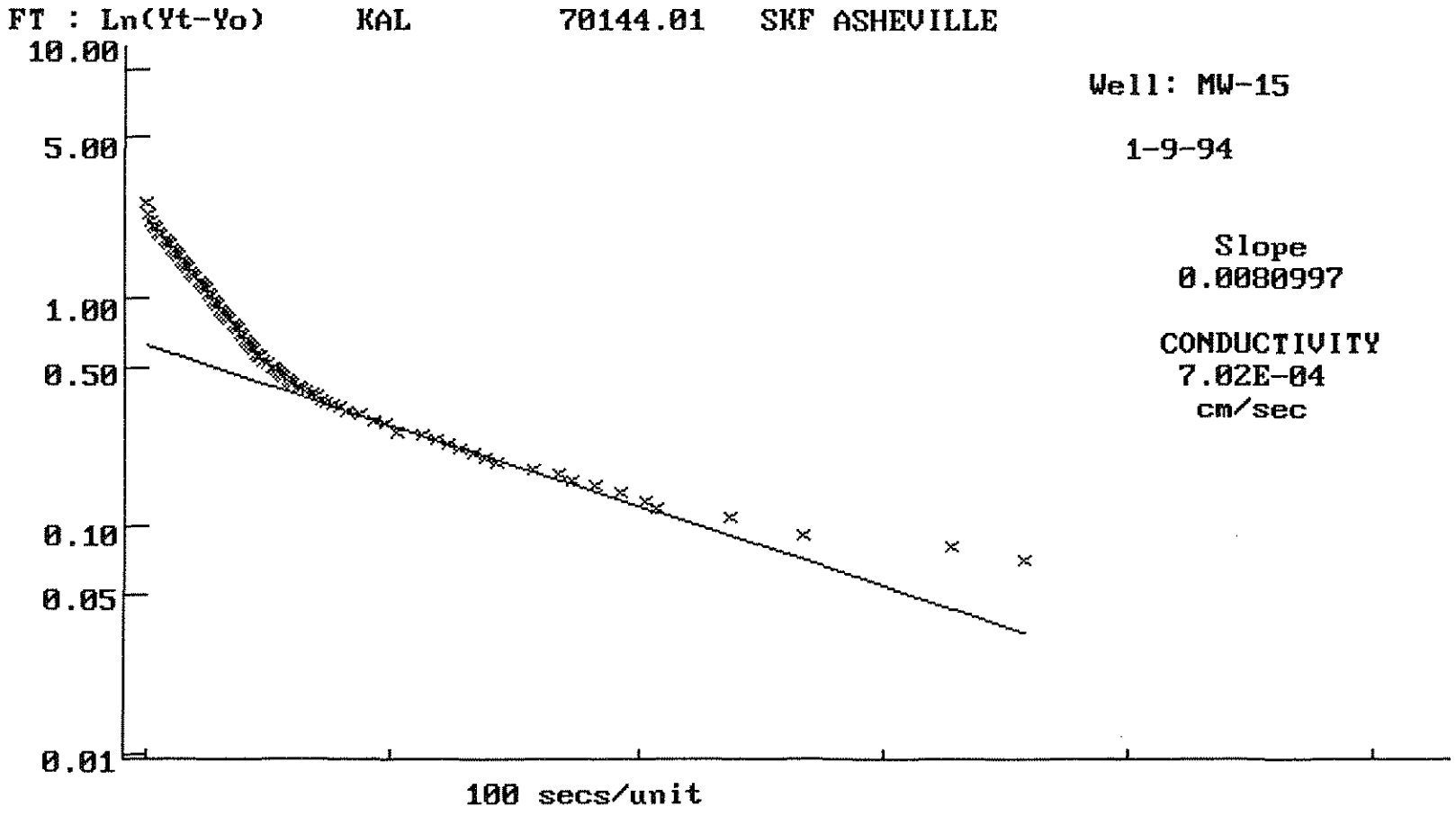
FT : Ln(Yt-Yo)
KAL
70144.01
SKF ASHEVILLE
10.00
5.00
1.00
0.50
0.10
0.05
0.01
Well: MW-15
1-9-94
Slope
0.0080997
CONDUCTIVITY
7.02E-04
cm/sec
100 secs/unit

HYDROCON - 1.2
HYDRAULIC CONDUCTIVITY
Bouwer and Rice Method

Well: MW-15A

PROJECT NAME: SKF ASHEVILLE
PROJECT NUMBER: 70144.01
FIELD WORK DATE(S): 11-15-93

USER NAME: KAL
DATE: 1-9-94

Rw - BORING RADIUS (IN): 5
L - SCREEN LENGTH (FT): 20
HT - SCREEN BASE TO WATER TABLE (FT): 51.71
START TIME (H,M,S): 0,0,0

Rc - WELL RADIUS (IN): 1
D - AQUIFER THICKNESS (FT): 52.44
STATIC WATER LEVEL (FT): 12.14

TIME (H,M,S)	DEPTH (FT)	TIME (H,M,S)	DEPTH (FT)
0,50,56	12.31	0,2,46	13.66
0,45,56	12.32	0,2,41	13.67
0,40,56	12.33	0,2,36	13.69
0,35,56	12.35	0,2,31	13.7
0,30,56	12.38	0,2,26	13.72
0,25,56	12.43	0,2,21	13.73
0,20,56	12.51	0,2,16	13.75
0,15,56	12.64	0,2,11	13.77
0,14,56	12.68	0,2,6	13.78
0,13,56	12.71	0,2,1	13.79
0,12,56	12.76	0,1,56	13.81
0,11,56	12.81	0,1,51	13.83
0,10,56	12.86	0,1,46	13.85
0,9,56	12.92	0,1,41	13.87
0,8,56	12.99	0,1,36	13.89
0,7,56	13.07	0,1,31	13.92
0,6,56	13.15	0,1,26	13.93
0,5,56	13.25	0,1,25	13.94
0,5,26	13.3	0,1,23	13.95
0,4,56	13.36	0,1,22	13.96
0,4,26	13.42	0,1,20	13.97
0,3,56	13.48	0,1,18	13.98
0,3,26	13.55	0,1,15	13.99
0,3,21	13.57	0,1,13	14
0,3,16	13.58	0,1,12	14.01
0,3,11	13.59	0,1,10	14.02
0,3,6	13.6	0,1,8	14.03
0,3,1	13.61	0,1,7	14.04
0,2,56	13.63	0,1,5	14.05
0,2,51	13.65	0,0,46	14.17

TIME (H,M,S)	DEPTH (FT)	TIME (H,M,S)	DEPTH (FT)
0,0,43	14.18	0,0,19	14.39
0,0,42	14.19	0,0,18	14.4
0,0,41	14.2	0,0,17	14.42
0,0,39	14.21	0,0,16	14.43
0,0,38	14.22	0,0,14	14.45
0,0,37	14.23	0,0,13	14.47
0,0,36	14.24	0,0,12	14.48
0,0,34	14.25	0,0,11	14.49
0,0,32	14.26	0,0,10	14.51
0,0,31	14.27	0,0,9	14.53
0,0,30	14.28	0,0,8	14.55
0,0,29	14.29	0,0,7	14.56
0,0,28	14.3	0,0,6	14.54
0,0,26	14.31	0,0,5	14.57
0,0,25	14.33	0,0,4	14.61
0,0,24	14.34	0,0,3	14.65
0,0,23	14.35	0,0,2	14.7
0,0,22	14.36	0,0,1	14.75
0,0,21	14.37	0,0,0	14.78
0,0,20	14.38		

(1/t) (ln(Yo/Yt))= 0.0014071

PARTIALLY PENETRATING: A= 2.97 B= 0.51

HYDRAULIC CONDUCTIVITY: 8.25E-07 ft/sec
2.52E-05 cm/sec

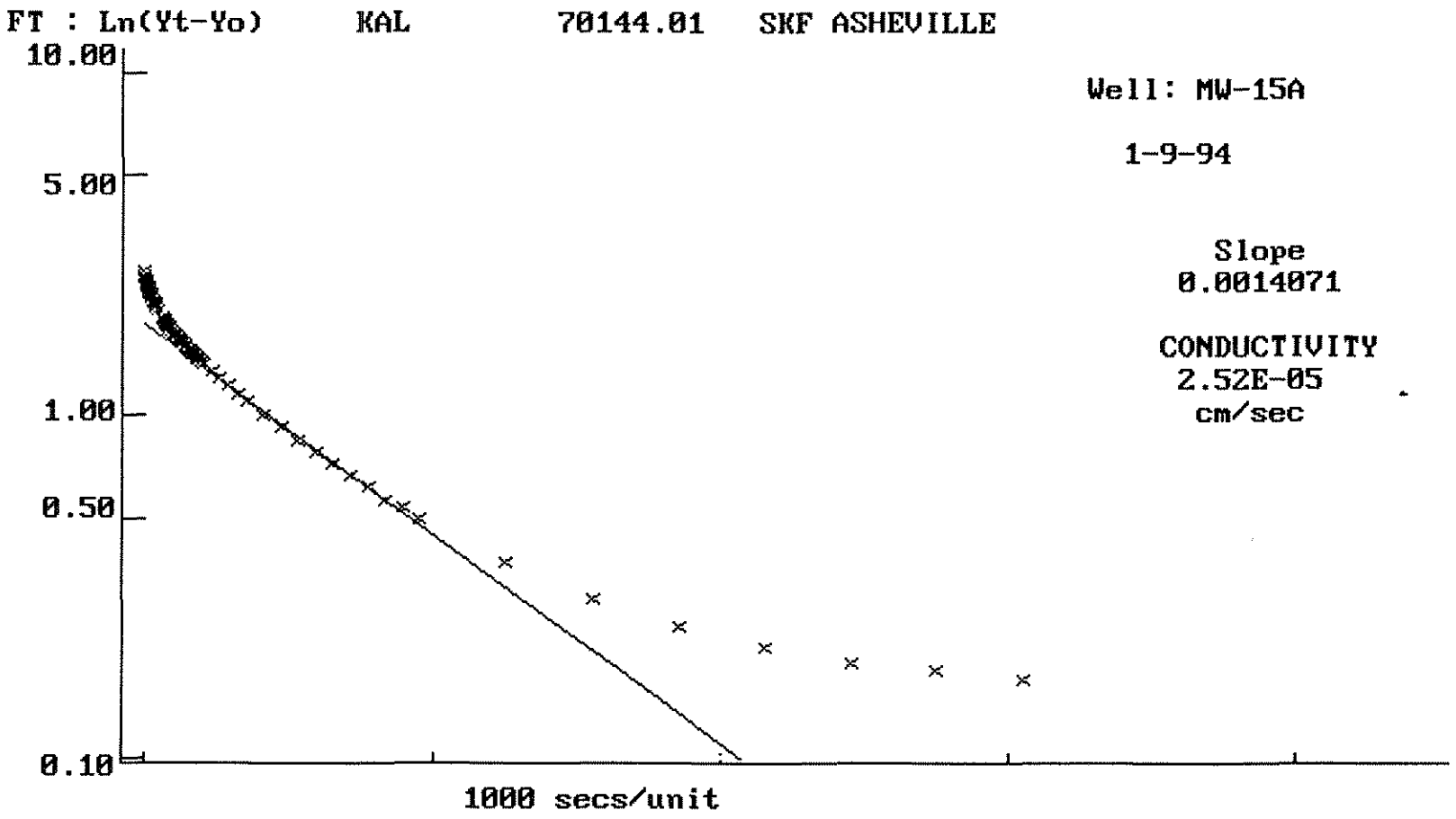
FT : Ln(Yt-Yo)
KAL
70144.01
SKF ASHEVILLE
10.00
5.00
1.00
0.50
0.10
Well: MW-15A
1-9-94
Slope
0.0014071
CONDUCTIVITY
2.52E-05
cm/sec
1000 secs/unit

HYDROCON - 1.2
HYDRAULIC CONDUCTIVITY
Bouwer and Rice Method

Well: MW-16

PROJECT NAME: SKF ASHEVILLE
PROJECT NUMBER: 70144.01
FIELD WORK DATE(S): 11-16-93

USER NAME: KAL
DATE: 1-9-94

Rw - BORING RADIUS (IN): 2.6
L - SCREEN LENGTH (FT): 15
HT - SCREEN BASE TO WATER TABLE (FT): 15.49
START TIME (H,M,S): 0,0,0

Rc - WELL RADIUS (IN): 1
D - AQUIFER THICKNESS (FT): 27.98
STATIC WATER LEVEL (FT): 6.51

Rc was corrected for response in well screen filter material to 1.652 inches

---

TIME (H,M,S)	DEPTH (FT)	TIME (H,M,S)	DEPTH (FT)
0,4,30	6.52	0,1,9	6.88
0,4,0	6.54	0,1,8	6.89
0,3,30	6.55	0,1,7	6.9
0,3,25	6.56	0,1,4	6.91
0,3,10	6.57	0,1,3	6.92
0,3,0	6.58	0,1,2	6.93
0,2,40	6.59	0,1,1	6.94
0,2,35	6.6	0,1,0	6.95
0,2,30	6.61	0,0,59	6.96
0,2,20	6.62	0,0,57	6.97
0,2,15	6.63	0,0,56	6.98
0,2,10	6.64	0,0,55	6.99
0,2,5	6.65	0,0,54	7
0,2,0	6.66	0,0,53	7.01
0,1,55	6.68	0,0,52	7.02
0,1,50	6.7	0,0,50	7.03
0,1,45	6.71	0,0,49	7.05
0,1,40	6.73	0,0,48	7.06
0,1,35	6.75	0,0,47	7.07
0,1,30	6.77	0,0,46	7.09
0,1,27	6.78	0,0,44	7.1
0,1,25	6.79	0,0,43	7.12
0,1,23	6.8	0,0,42	7.13
0,1,21	6.81	0,0,41	7.15
0,1,20	6.82	0,0,39	7.16
0,1,18	6.83	0,0,38	7.18
0,1,15	6.84	0,0,37	7.19
0,1,14	6.85	0,0,36	7.2
0,1,12	6.86	0,0,35	7.22
0,1,11	6.87	0,0,34	7.22

TIME (H,M,S)	DEPTH (FT)	TIME (H,M,S)	DEPTH (FT)
0,0,33	7.24	0,0,13	7.9
0,0,32	7.26	0,0,12	7.96
0,0,31	7.28	0,0,11	8.02
0,0,30	7.29	0,0,10	8.08
0,0,29	7.31	0,0,9	8.15
0,0,28	7.33	0,0,8	8.22
0,0,27	7.35	0,0,7	8.3
0,0,26	7.38	0,0,6	8.37
0,0,25	7.4	0,0,5	8.45
0,0,24	7.42	0,0,4	8.53
0,0,23	7.46	0,0,3	8.62
0,0,22	7.48	0,0,2	8.75
0,0,21	7.52	0,0,1	8.93
0,0,20	7.55	0,0,0	8.94
0,0,19	7.6		
0,0,18	7.64		
0,0,17	7.68		
0,0,16	7.73		
0,0,15	7.79		
0,0,14	7.85		

(1/t) (ln(Yo/Yt))= 0.0184448

PARTIALLY PENETRATING: A= 3.58 B= 0.63

HYDRAULIC CONDUCTIVITY: 3.37E-05 ft/sec
1.03E-03 cm/sec

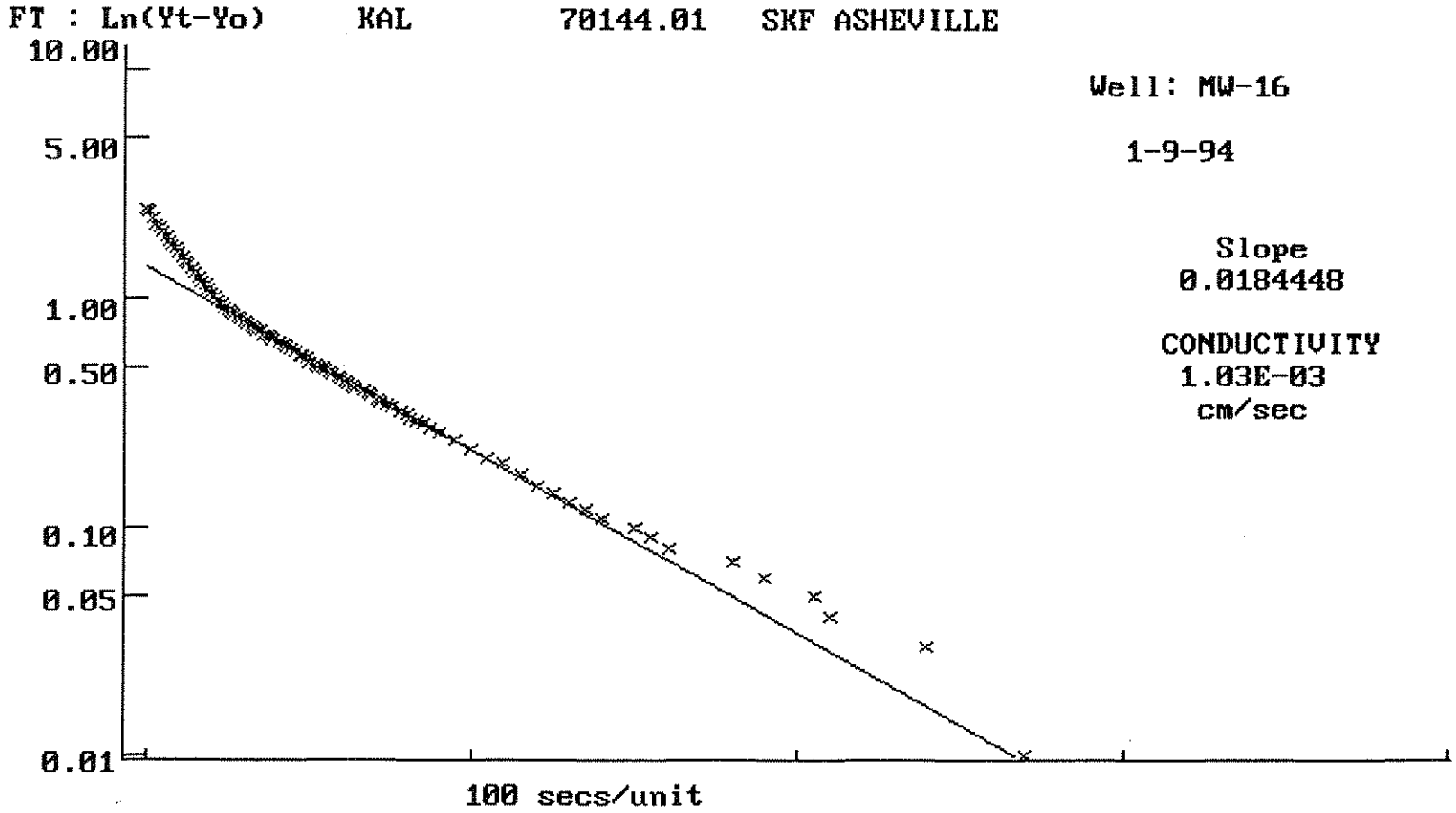
FT : Ln(Yt-Yo)
KAL
70144.01
SKF ASHEVILLE
10.00
5.00
1.00
0.50
0.10
0.05
0.01
100 secs/unit
Well: MW-16
1-9-94
Slope
0.0184448
CONDUCTIVITY
1.03E-03
cm/sec

HYDROCON - 1.2
HYDRAULIC CONDUCTIVITY
Bouwer and Rice Method

Well: MW-16A

PROJECT NAME: SKF ASHEVILLE
PROJECT NUMBER: 70144.01
FIELD WORK DATE(S): 11-16-93

USER NAME: KAL
DATE: 1-9-94

Rw - BORING RADIUS (IN): 5
L - SCREEN LENGTH (FT): 10
HT - SCREEN BASE TO WATER TABLE (FT): 27.98
START TIME (H,M,S): 0,0,0

Rc - WELL RADIUS (IN): 1
D - AQUIFER THICKNESS (FT): 27.98
STATIC WATER LEVEL (FT): 6.27

TIME (H,M,S)	DEPTH (FT)	TIME (H,M,S)	DEPTH (FT)
0,5,58	6.27	0,0,23	6.59
0,3,28	6.28	0,0,22	6.61
0,2,33	6.29	0,0,21	6.63
0,2,3	6.3	0,0,20	6.65
0,1,43	6.31	0,0,19	6.68
0,1,33	6.32	0,0,18	6.7
0,1,14	6.33	0,0,17	6.73
0,1,8	6.34	0,0,16	6.76
0,1,3	6.35	0,0,15	6.79
0,0,59	6.36	0,0,14	6.84
0,0,56	6.37	0,0,13	6.87
0,0,52	6.38	0,0,12	6.92
0,0,49	6.39	0,0,11	6.97
0,0,45	6.4	0,0,10	7.03
0,0,43	6.41	0,0,9	7.09
0,0,41	6.42	0,0,8	7.17
0,0,40	6.43	0,0,7	7.26
0,0,38	6.44	0,0,6	7.36
0,0,37	6.45	0,0,5	7.48
0,0,34	6.46	0,0,4	7.6
0,0,33	6.47	0,0,3	7.76
0,0,32	6.48	0,0,2	7.95
0,0,31	6.49	0,0,1	8.18
0,0,30	6.5	0,0,0	8.46
0,0,29	6.51		
0,0,28	6.52		
0,0,27	6.53		
0,0,26	6.55		
0,0,25	6.56		
0,0,24	6.58		

(1/t) (ln(Yo/Yt))= 0.0300165

FULLY PENETRATING: C= 1.87

HYDRAULIC CONDUCTIVITY: 3.07E-05 ft/sec
9.36E-04 cm/sec

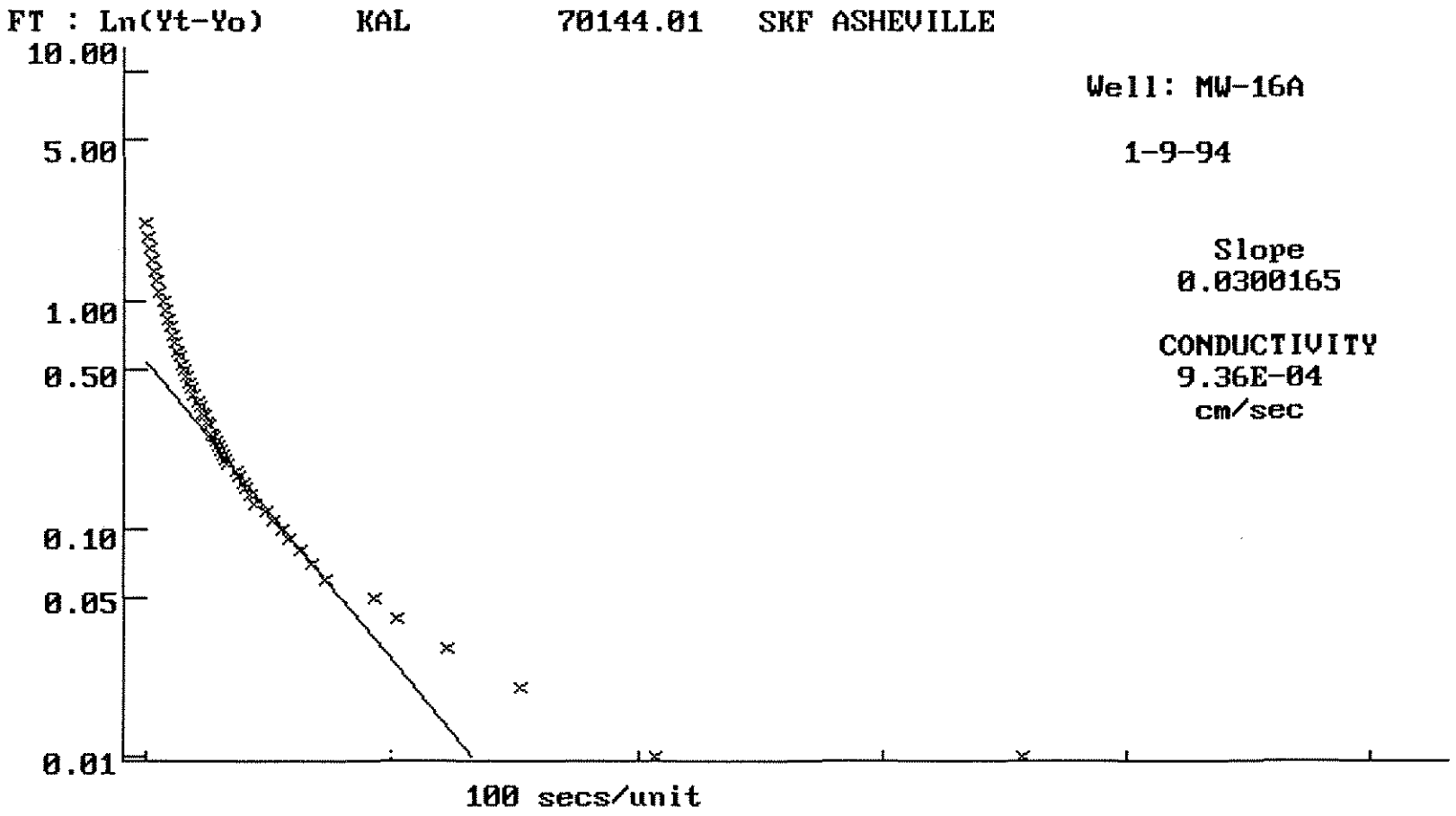
FT : Ln(Yt-Yo)
KAL
70144.01
SKF ASHEVILLE
10.00
5.00
1.00
0.50
0.10
0.05
0.01
100 secs/unit
Well: MW-16A
1-9-94
Slope
0.0300165
CONDUCTIVITY
9.36E-04
cm/sec

HYDROCON - 1.2
HYDRAULIC CONDUCTIVITY
Bouwer and Rice Method

Well: MW-17

PROJECT NAME: SKF ASHEVILLE
PROJECT NUMBER: 70144.01
FIELD WORK DATE(S): 11-16-93

USER NAME: KAL
DATE: 1-9-94

Rw - BORING RADIUS (IN): 5
L - SCREEN LENGTH (FT): 10
HT - SCREEN BASE TO WATER TABLE (FT): 16.88
START TIME (H,M,S): 0,0,0

Rc - WELL RADIUS (IN): 1
D - AQUIFER THICKNESS (FT): 100
STATIC WATER LEVEL (FT): 12.82

TIME (H,M,S)	DEPTH (FT)	TIME (H,M,S)	DEPTH (FT)
0,30,58	12.87	0,2,18	13.42
0,25,58	12.88	0,2,13	13.44
0,20,58	12.9	0,2,8	13.45
0,15,58	12.91	0,2,3	13.47
0,14,58	12.92	0,1,58	13.48
0,13,58	12.93	0,1,53	13.5
0,12,58	12.94	0,1,48	13.52
0,11,58	12.95	0,1,43	13.54
0,10,58	12.96	0,1,38	13.55
0,9,58	12.98	0,1,33	13.57
0,8,58	13	0,1,28	13.6
0,7,58	13.03	0,1,24	13.61
0,6,58	13.05	0,1,22	13.62
0,5,58	13.09	0,1,20	13.63
0,5,28	13.11	0,1,18	13.64
0,4,58	13.14	0,1,16	13.65
0,4,28	13.17	0,1,14	13.66
0,3,58	13.22	0,1,12	13.67
0,3,28	13.27	0,1,9	13.67
0,3,23	13.28	0,1,8	13.68
0,3,13	13.29	0,1,7	13.69
0,3,8	13.3	0,1,5	13.7
0,3,3	13.31	0,1,3	13.71
0,2,58	13.33	0,1,1	13.72
0,2,53	13.34	0,1,0	13.73
0,2,48	13.35	0,0,56	13.74
0,2,38	13.37	0,0,55	13.75
0,2,33	13.38	0,0,53	13.76
0,2,28	13.4	0,0,52	13.77
0,2,23	13.41	0,0,50	13.78

TIME (H,M,S)	DEPTH (FT)
0,0,48	13.79
0,0,45	13.8
0,0,44	13.81
0,0,42	13.82
0,0,41	13.83
0,0,40	13.84
0,0,38	13.85
0,0,37	13.86
0,0,34	13.87
0,0,33	13.88
0,0,32	13.89
0,0,30	13.9
0,0,29	13.91
0,0,28	13.92
0,0,25	13.93
0,0,24	13.94
0,0,23	13.95
0,0,22	13.96
0,0,21	13.97
0,0,20	13.98

TIME (H,M,S)	DEPTH (FT)
0,0,19	13.98
0,0,18	13.99
0,0,16	14
0,0,15	14.01
0,0,14	14.02
0,0,13	14.04
0,0,12	14.05
0,0,10	14.06
0,0,9	14.07
0,0,8	14.09
0,0,7	14.1
0,0,5	14.11
0,0,4	14.18
0,0,3	14.18
0,0,2	14.03
0,0,1	14.12

(1/t) (ln(Yo/Yt))= 0.0046425

PARTIALLY PENETRATING: A= 2.32 B= 0.37

HYDRAULIC CONDUCTIVITY: 3.40E-06 ft/sec
1.04E-04 cm/sec

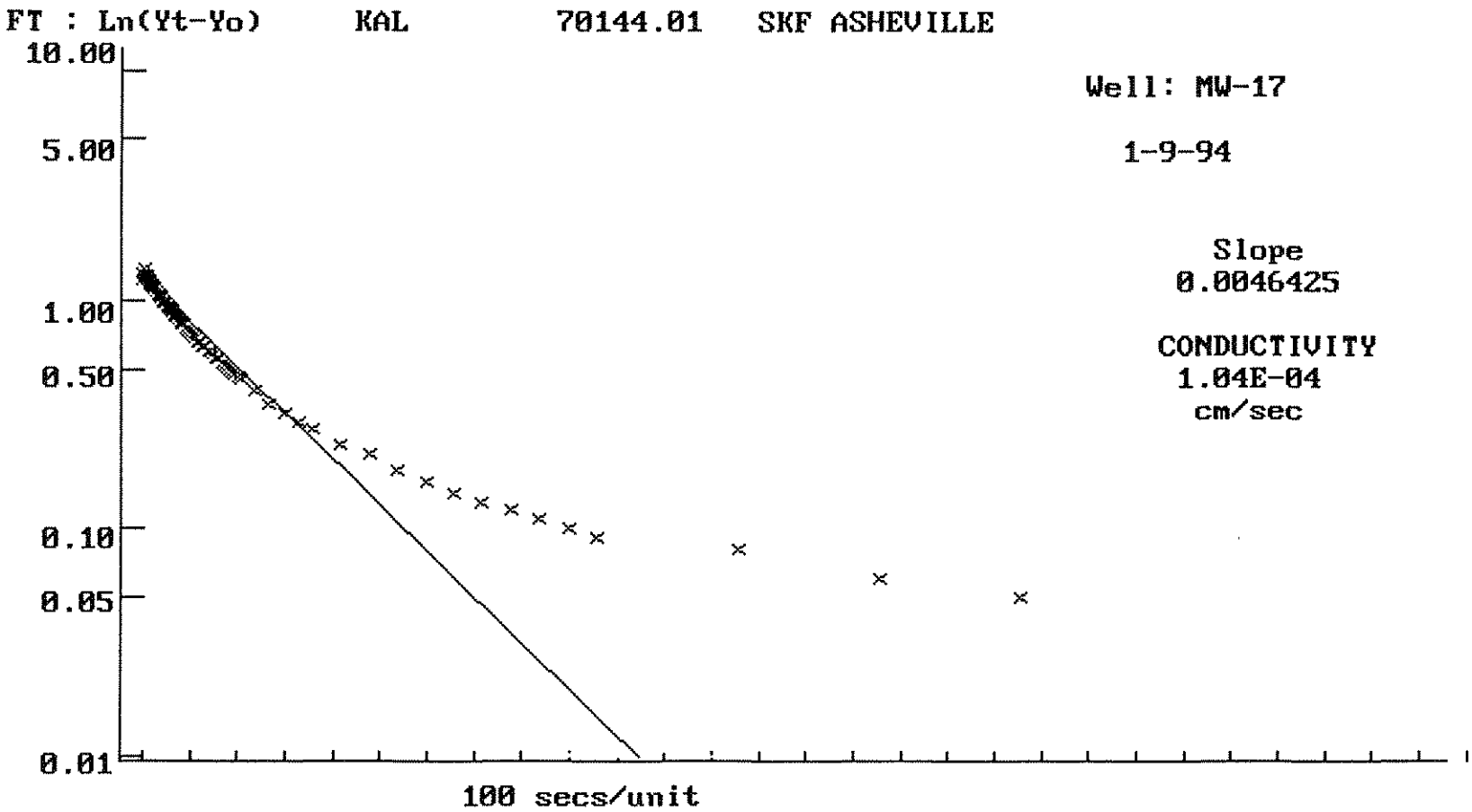
FT : Ln(Yt-Yo)
KAL
70144.01
SKF ASHEVILLE
10.00
5.00
1.00
0.50
0.10
0.05
0.01
Well: MW-17
1-9-94
Slope
0.0046425
CONDUCTIVITY
1.04E-04
cm/sec
100 secs/unit

HYDROCON - 1.2
HYDRAULIC CONDUCTIVITY
Bouwer and Rice Method

Well: MW-18

PROJECT NAME: SKF-ASHEVILLE
PROJECT NUMBER: 70144.02
FIELD WORK DATE(S): 04-21-94

USER NAME: KAL
DATE: 10-28-94

Rw - BORING RADIUS (IN): 2.94
L - SCREEN LENGTH (FT): 10
HT - SCREEN BASE TO WATER TABLE (FT): 14.06
START TIME (H,M,S): 0,0,0

Rc - WELL RADIUS (IN): 1
D - AQUIFER THICKNESS (FT): 100
STATIC WATER LEVEL (FT): 11.96

TIME (H,M,S)	DEPTH (FT)	TIME (H,M,S)	DEPTH (FT)
0,7,36.12	12.57	0,0,30	13.08
0,6,55.92001	12.58	0,0,28.98	13.09
0,6,36	12.59	0,0,28.02	13.1
0,6,16.01999	12.6	0,0,27	13.11
0,5,55.98001	12.61	0,0,25.02	13.12
0,5,36	12.63	0,0,24	13.13
0,4,55.98001	12.64	0,0,22.02	13.14
0,4,36	12.66	0,0,21	13.15
0,4,16.01999	12.67	0,0,19.98	13.16
0,3,55.98	12.7	0,0,19.02	13.18
0,3,36	12.71	0,0,18	13.19
0,3,16.02	12.73	0,0,16.02	13.2
0,2,55.98	12.75	0,0,15	13.22
0,2,36	12.77	0,0,13.98	13.24
0,2,16.02	12.79	0,0,13.02	13.26
0,1,55.98	12.82	0,0,12	13.27
0,1,36	12.87	0,0,10.98	13.28
0,1,16.02	12.91	0,0,10.02	13.31
0,0,55.02	12.96	0,0,9	13.34
0,0,54	12.97	0,0,7.98	13.36
0,0,49.98	12.98	0,0,7.02	13.39
0,0,48	12.99	0,0,6	13.42
0,0,46.02	13	0,0,4.98	13.45
0,0,45	13.01	0,0,4.02	13.5
0,0,40.98	13.02	0,0,3	13.55
0,0,40.02	13.03	0,0,1.98	13.62
0,0,36	13.04	0,0,1.02	13.69
0,0,34.98	13.05	0,0,0	13.94
0,0,34.02	13.06		
0,0,31.98	13.07		

(1/t) (ln(Yo/Yt))= 0.0011385

PARTIALLY PENETRATING: A= 2.77 B= 0.47

HYDRAULIC CONDUCTIVITY: 9.70E-07 ft/sec
2.96E-05 cm/sec

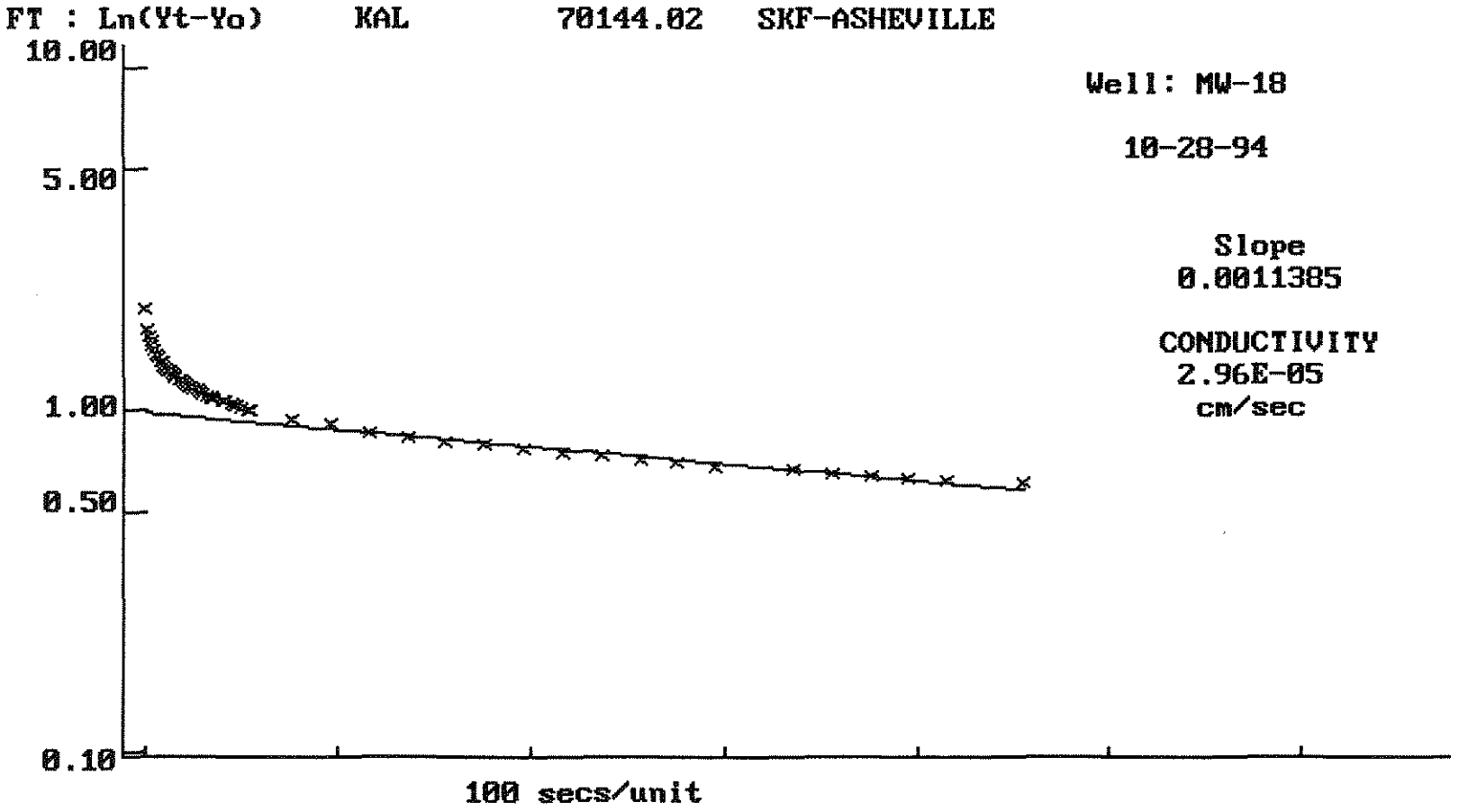
FT : Ln(Yt-Yo)
KAL
70144.02
SKF-ASHEVILLE
10.00
5.00
1.00
0.50
0.10
100 secs/unit
Well: MW-18
10-28-94
Slope
0.0011385
CONDUCTIVITY
2.96E-05
cm/sec

HYDROCON - 1.2
HYDRAULIC CONDUCTIVITY
Bouwer and Rice Method

Well: MW-19

PROJECT NAME: SKF-ASHEVILLE
PROJECT NUMBER: 70144.02
FIELD WORK DATE(S): 04-21-94

USER NAME: KAL
DATE: 10-28-94

Rw - BORING RADIUS (IN): 3.05
L - SCREEN LENGTH (FT): 10
HT - SCREEN BASE TO WATER TABLE (FT): 9.47
START TIME (H,M,S): 0,0,0

Rc - WELL RADIUS (IN): 1
D - AQUIFER THICKNESS (FT): 100
STATIC WATER LEVEL (FT): 20.77

Rc was corrected for response in well screen filter material to 1.868 inches

---

TIME (H,M,S)	DEPTH (FT)	TIME (H,M,S)	DEPTH (FT)
0,7,41.22	21.16	0,0,29.94	21.55
0,7,20.82001	21.17	0,0,27.96	21.56
0,6,40.98001	21.18	0,0,26.94	21.57
0,6,20.94	21.19	0,0,25.98	21.59
0,6,.9599915	21.19	0,0,24.96	21.6
0,5,40.98001	21.2	0,0,23.94	21.61
0,5,20.94	21.21	0,0,21.96	21.62
0,4,20.94	21.22	0,0,21	21.63
0,4,.9600067	21.23	0,0,19.98	21.65
0,3,40.98	21.24	0,0,18.96	21.67
0,3,20.94	21.25	0,0,18	21.68
0,3,.9600067	21.27	0,0,16.98	21.7
0,2,40.98	21.28	0,0,15	21.72
0,2,20.94	21.3	0,0,13.98	21.75
0,2,.9599991	21.32	0,0,12.96	21.77
0,1,40.98	21.34	0,0,12	21.8
0,1,20.94	21.37	0,0,10.98	21.82
0,0,57.96	21.42	0,0,9.96	21.84
0,0,55.98	21.43	0,0,9	21.86
0,0,52.98	21.44	0,0,7.98	21.9
0,0,50.94	21.45	0,0,6.96	21.93
0,0,46.98	21.46	0,0,6	21.98
0,0,45.96	21.47	0,0,4.98	22.03
0,0,41.94	21.48	0,0,3.96	22.1
0,0,39.96	21.49	0,0,3	22.18
0,0,37.98	21.5	0,0,1.98	22.27
0,0,35.94	21.51	0,0,.96	22.42
0,0,33.96	21.52	0,0,0	22.69
0,0,32.94	21.53		
0,0,31.98	21.54		

(1/t) (ln(Yo/Yt))= 0.0009289

PARTIALLY PENETRATING: A= 2.73 B= 0.46

HYDRAULIC CONDUCTIVITY: 2.54E-06 ft/sec
7.75E-05 cm/sec

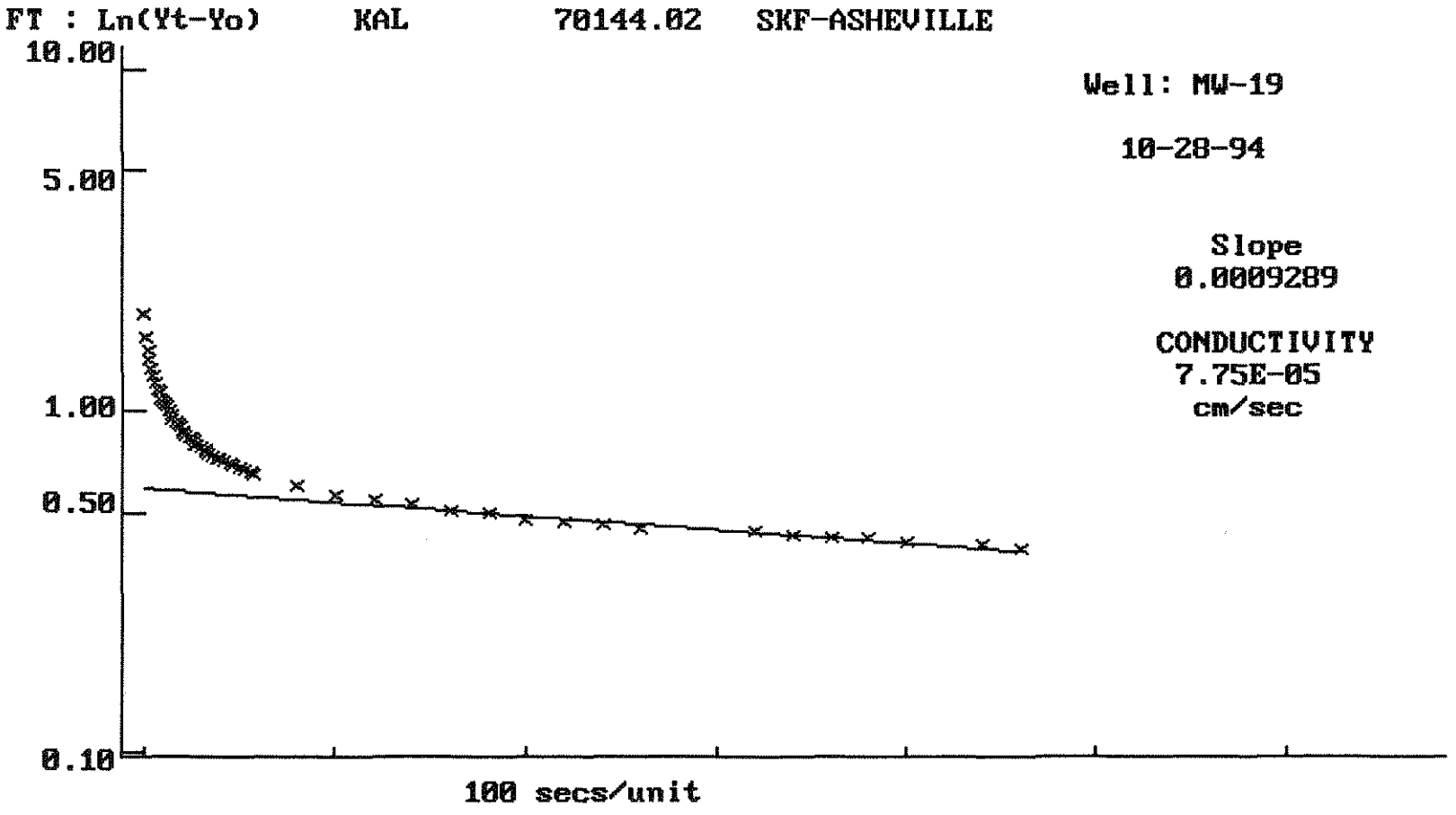
FT : Ln(Yt-Yo)
KAL
70144.02
SKF-ASHEVILLE
10.00
5.00
1.00
0.50
0.10
100 secs/unit
Well: MW-19
10-28-94
Slope
0.0009289
CONDUCTIVITY
7.75E-05
cm/sec

HYDROCON - 1.2
HYDRAULIC CONDUCTIVITY
Bouwer and Rice Method

Well: MW-20

PROJECT NAME: SKF-ASHEVILLE
PROJECT NUMBER: 70144.02
FIELD WORK DATE(S): 4-21-94

USER NAME: KAL
DATE: 10-27-94

Rw - BORING RADIUS (IN): 2.87
L - SCREEN LENGTH (FT): 10
HT - SCREEN BASE TO WATER TABLE (FT): 9.33
START TIME (H,M,S): 0,0,0

Rc - WELL RADIUS (IN): 1
D - AQUIFER THICKNESS (FT): 50
STATIC WATER LEVEL (FT): 13.67

Rc was corrected for response in well screen filter material to 1.781 inches

---

TIME (H,M,S)	DEPTH (FT)	TIME (H,M,S)	DEPTH (FT)
1,30,9.120117	13.85	0,0,57	14.43
1,19,39.12012	13.86	0,0,55.98	14.44
1,11,39.12012	13.87	0,0,55.02	14.46
1,3,39.12012	13.89	0,0,54	14.47
0,55,39.12012	13.9	0,0,52.98	14.48
0,47,39.12012	13.91	0,0,52.02	14.5
0,40,59.12012	13.93	0,0,51	14.51
0,33,39.12	13.94	0,0,49.98	14.53
0,31,39.12	13.95	0,0,49.02	14.55
0,27,39.12	13.96	0,0,48	14.56
0,25,39.12	13.97	0,0,46.98	14.58
0,21,39.12	13.98	0,0,46.02	14.6
0,19,39.12	13.99	0,0,45	14.61
0,15,39.12	14	0,0,43.98	14.63
0,13,39.12	14.02	0,0,43.02	14.65
0,11,39.12	14.03	0,0,42	14.67
0,9,39.12	14.04	0,0,40.98	14.68
0,6,19.01999	14.06	0,0,40.02	14.7
0,5,39	14.07	0,0,39	14.72
0,4,58.98001	14.08	0,0,37.98	14.74
0,4,39	14.09	0,0,37.02	14.76
0,3,58.98	14.1	0,0,36	14.78
0,3,19.02	14.11	0,0,34.98	14.8
0,2,58.98	14.12	0,0,34.02	14.82
0,2,39	14.14	0,0,33	14.83
0,2,19.02	14.16	0,0,31.98	14.86
0,1,58.98	14.18	0,0,31.02	14.88
0,1,39	14.21	0,0,30	14.9
0,1,19.02	14.27	0,0,28.98	14.92
0,0,58.02	14.42	0,0,28.02	14.94

TIME (H,M,S)	DEPTH (FT)
0,0,27	14.96
0,0,25.98	14.99
0,0,25.02	15.01
0,0,24	15.03
0,0,22.98	15.06
0,0,22.02	15.08
0,0,21	15.1
0,0,19.98	15.13
0,0,19.02	15.15
0,0,18	15.18
0,0,16.98	15.2
0,0,16.02	15.22
0,0,15	15.25
0,0,13.98	15.27
0,0,13.02	15.3
0,0,12	15.32
0,0,10.98	15.35
0,0,10.02	15.38
0,0,9	15.4
0,0,7.98	15.44
0,0,7.02	15.46
0,0,6	15.49
0,0,4.98	15.53
0,0,4.02	15.56
0,0,3	15.6
0,0,1.98	15.64
0,0,1.02	15.68
0,0,0	15.72

(1/t) (ln(Yo/Yt))= 0.0001744

PARTIALLY PENETRATING: A= 2.79 B= 0.48

HYDRAULIC CONDUCTIVITY: 4.51E-07 ft/sec
1.37E-05 cm/sec

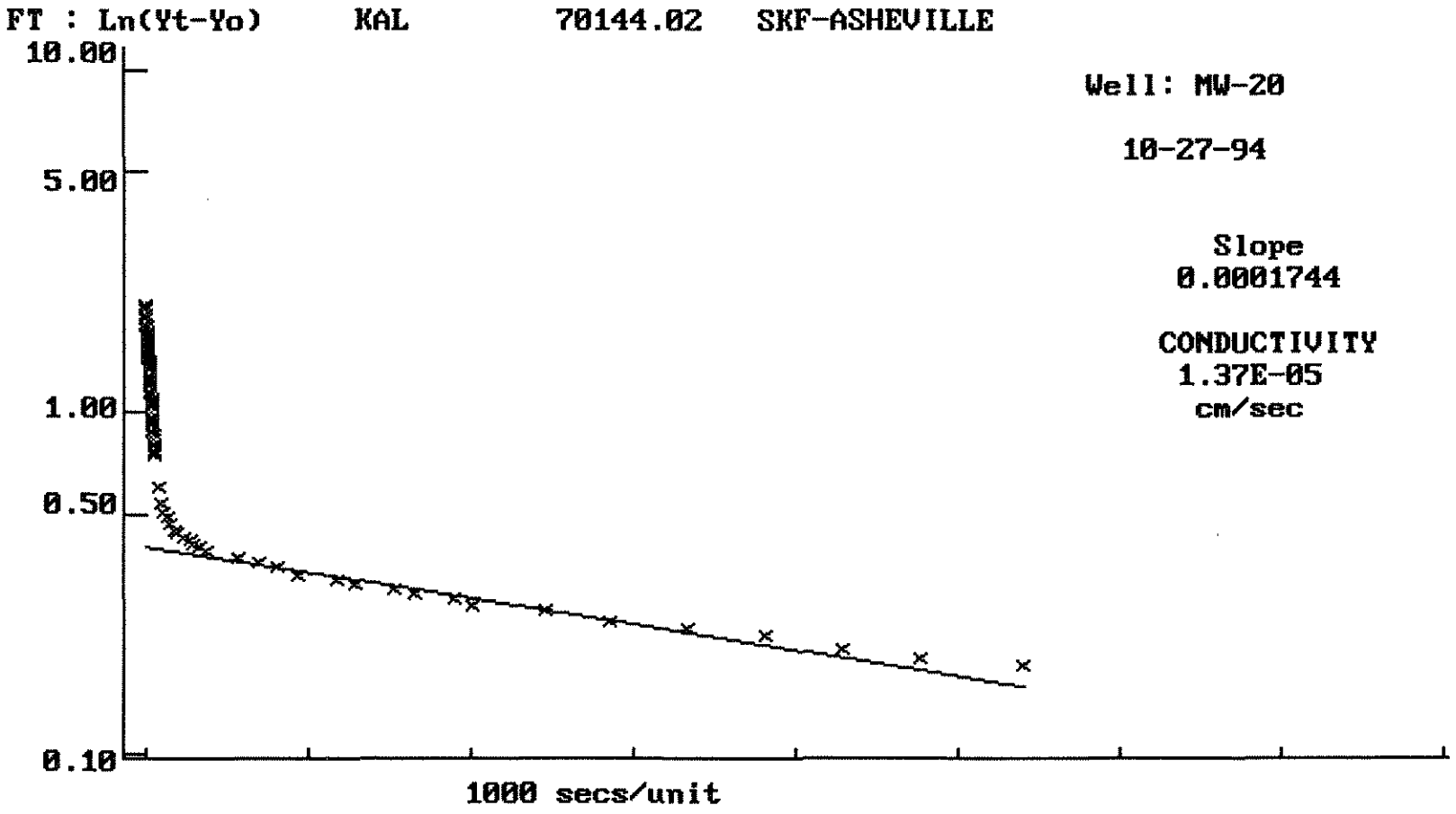
FT : Ln(Yt-Yo)
KAL
70144.02
SKF-ASHEVILLE
10.00
5.00
1.00
0.50
0.10
1000 secs/unit
Well: MW-20
10-27-94
Slope
0.0001744
CONDUCTIVITY
1.37E-05
cm/sec

HYDROCON - 1.2
HYDRAULIC CONDUCTIVITY
Bouwer and Rice Method

Well: MW-21

PROJECT NAME: SKF-ASHEVILLE
PROJECT NUMBER: 70144.02
FIELD WORK DATE(S): 04-21-94

USER NAME: KAL
DATE: 10-28-94

Rw - BORING RADIUS (IN): 2.94
L - SCREEN LENGTH (FT): 10
HT - SCREEN BASE TO WATER TABLE (FT): 18.16
START TIME (H,M,S): 0,0,0

Rc - WELL RADIUS (IN): 1
D - AQUIFER THICKNESS (FT): 100
STATIC WATER LEVEL (FT): 12.67

TIME (H,M,S)	DEPTH (FT)	TIME (H,M,S)	DEPTH (FT)
1,8,11.1001	13.4	0,4,18	14.9
1,3,38.1001	13.44	0,3,57.96001	14.93
0,55,38.1001	13.51	0,3,37.98	14.95
0,47,38.1001	13.61	0,3,18	14.98
0,39,38.1001	13.72	0,2,57.96001	15.01
0,37,38.1001	13.76	0,2,37.98	15.04
0,35,38.1001	13.8	0,2,18	15.06
0,33,38.09998	13.83	0,1,57.96	15.09
0,31,38.09998	13.88	0,1,37.98	15.12
0,29,38.09998	13.92	0,1,18	15.16
0,27,38.09998	13.97	0,0,57	15.18
0,25,38.09998	14.02	0,0,55.98	15.19
0,23,38.09998	14.07	0,0,48.96	15.2
0,21,38.09998	14.14	0,0,46.98	15.21
0,19,38.09998	14.2	0,0,39	15.22
0,17,38.09998	14.26	0,0,34.98	15.23
0,15,38.09998	14.34	0,0,31.98	15.24
0,13,38.09998	14.41	0,0,27	15.25
0,11,38.09998	14.51	0,0,24	15.26
0,9,38.09998	14.6	0,0,21	15.27
0,7,38.10001	14.7	0,0,18	15.28
0,7,17.70001	14.72	0,0,15.96	15.29
0,6,57.89999	14.73	0,0,15	15.3
0,6,37.98001	14.76	0,0,12	15.31
0,6,18	14.77	0,0,10.98	15.33
0,5,57.95999	14.79	0,0,9.96	15.39
0,5,37.98001	14.82	0,0,6.96	15.43
0,5,18	14.84	0,0,6	15.42
0,4,57.95999	14.85	0,0,3.96	15.41
0,4,37.98001	14.88	0,0,3	15.45

TIME (H,M,S)	DEPTH (FT)
0,0,1.98	15.54
0,0,.96	15.68
0,0,0	15.79

(1/t) (ln(Yo/Yt))= 0.0003710

PARTIALLY PENETRATING: A= 2.77 B= 0.47

HYDRAULIC CONDUCTIVITY: 3.30E-07 ft/sec
1.00E-05 cm/sec

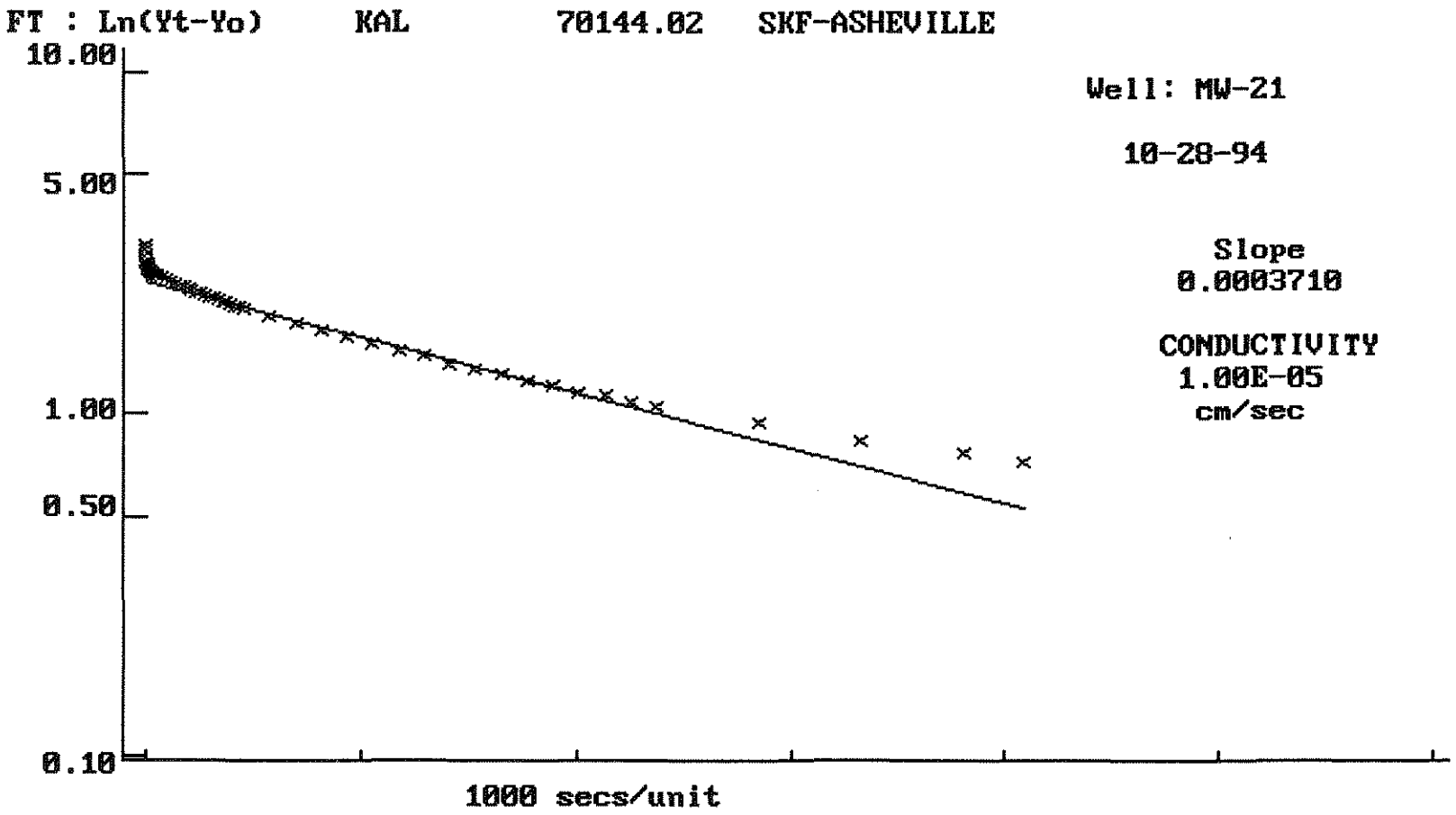
FT : Ln(Yt-Yo)
KAL
70144.02
SKF-ASHEVILLE
10.00
5.00
1.00
0.50
0.10
1000 secs/unit
Well: MW-21
10-28-94
Slope
0.0003710
CONDUCTIVITY
1.00E-05
cm/sec

HYDROCON - 1.2
HYDRAULIC CONDUCTIVITY
Bouwer and Rice Method

Well: MW-22

PROJECT NAME: SKF-ASHEVILLE
PROJECT NUMBER: 70144.02
FIELD WORK DATE(S): 4-22-94

USER NAME: KAL
DATE: 10-28-94

Rw - BORING RADIUS (IN): 2.94
L - SCREEN LENGTH (FT): 10
HT - SCREEN BASE TO WATER TABLE (FT): 14.09
START TIME (H,M,S): 0,0,0

Rc - WELL RADIUS (IN): 1
D - AQUIFER THICKNESS (FT): 100
STATIC WATER LEVEL (FT): 42.08

Rc was corrected for response in well screen filter material to 1.815 inches

---

TIME (H,M,S)	DEPTH (FT)	TIME (H,M,S)	DEPTH (FT)
0,35,41.1001	42.09	0,0,55.98	43.47
0,23,41.09998	42.1	0,0,54.96	43.48
0,17,41.09998	42.11	0,0,54	43.51
0,15,41.09998	42.12	0,0,52.98	43.52
0,13,41.09998	42.13	0,0,51.96	43.53
0,11,41.09998	42.14	0,0,51	43.55
0,9,41.09998	42.16	0,0,49.98	43.57
0,7,41.10001	42.19	0,0,48.96	43.58
0,7,20.70001	42.2	0,0,48	43.6
0,6,40.98001	42.22	0,0,46.98	43.61
0,6,21	42.24	0,0,45.96	43.63
0,6,.9599915	42.25	0,0,45	43.65
0,5,40.98001	42.26	0,0,43.98	43.67
0,5,21	42.28	0,0,42.96	43.68
0,5,.9599915	42.29	0,0,42	43.7
0,4,40.98001	42.32	0,0,40.98	43.72
0,4,21	42.34	0,0,39.96	43.74
0,4,.9600067	42.38	0,0,39	43.76
0,3,40.98	42.41	0,0,37.98	43.78
0,3,21	42.47	0,0,36.96	43.79
0,3,.9600067	42.53	0,0,36	43.82
0,2,40.98	42.6	0,0,34.98	43.84
0,2,21	42.7	0,0,33.96	43.86
0,2,.9599991	42.81	0,0,33	43.88
0,1,40.98	42.96	0,0,31.98	43.89
0,1,21	43.15	0,0,30.96	43.93
0,1,0	43.41	0,0,30	43.94
0,0,58.98	43.43	0,0,28.98	43.98
0,0,57.96	43.44	0,0,27.96	44
0,0,57	43.46	0,0,27	44.02

TIME (H,M,S)	DEPTH (FT)
0,0,25.98	44.04
0,0,24.96	44.08
0,0,24	44.09
0,0,22.98	44.16
0,0,21.96	44.2
0,0,21	44.25
0,0,19.98	44.31
0,0,18.96	44.28
0,0,18	44.28
0,0,16.98	44.31
0,0,15.96	44.34
0,0,15	44.37
0,0,13.98	44.41
0,0,12.96	44.45
0,0,12	44.47
0,0,10.98	44.52
0,0,9.96	44.53
0,0,9	44.56
0,0,7.98	44.59
0,0,6.96	44.62

TIME (H,M,S)	DEPTH (FT)
0,0,6	44.66
0,0,4.98	44.67
0,0,3.96	44.73
0,0,3	44.76
0,0,1.98	44.81
0,0,.96	44.86
0,0,0	44.92

(1/t) (ln(Yo/Yt))= 0.0043195

PARTIALLY PENETRATING: A= 2.77 B= 0.47

HYDRAULIC CONDUCTIVITY: 1.21E-05 ft/sec
3.69E-04 cm/sec

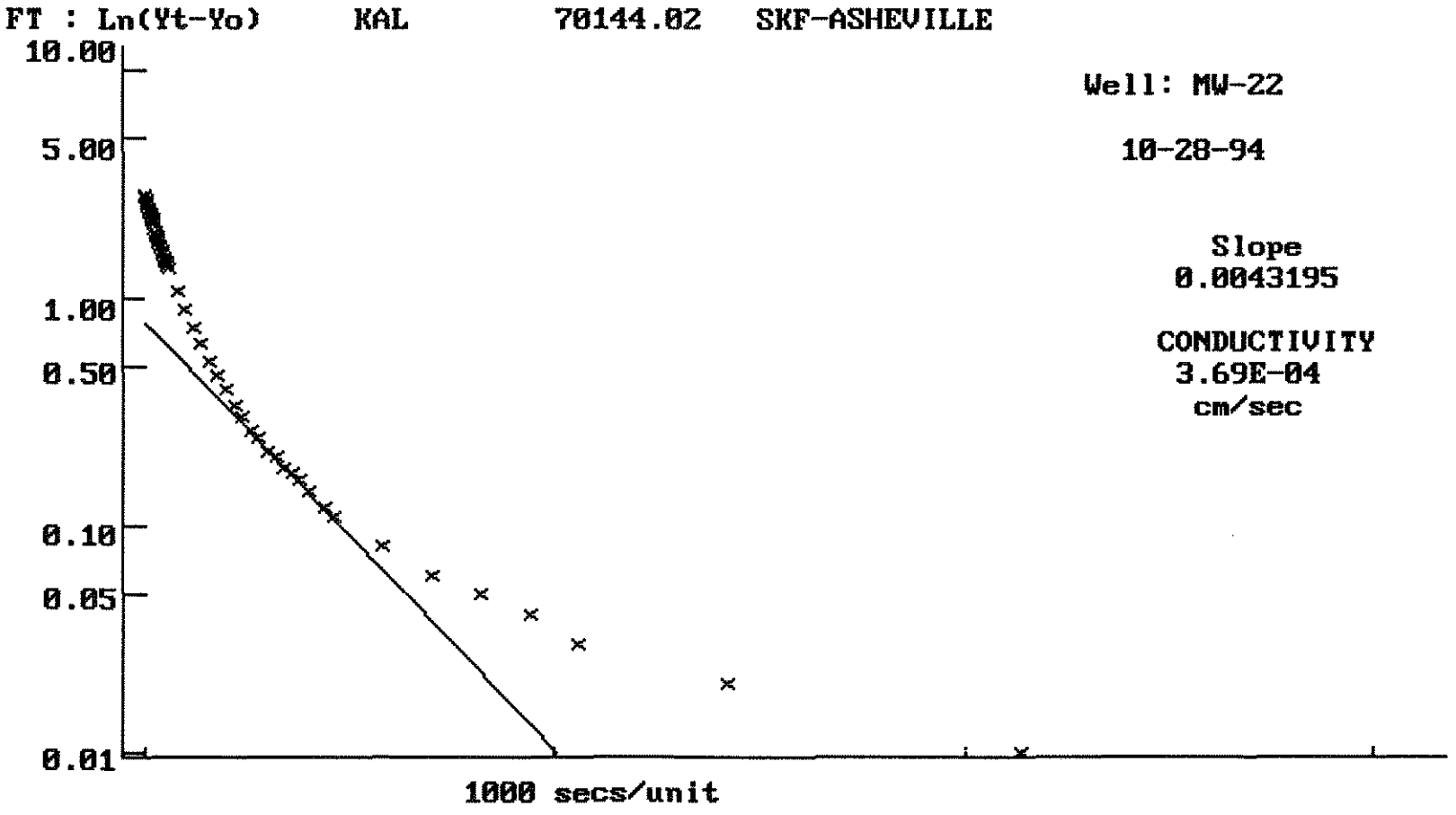
FT : Ln(Yt-Yo)
KAL
70144.02
SKF-ASHEVILLE
10.00
5.00
1.00
0.50
0.10
0.05
0.01
1000 secs/unit
Well: MW-22
10-28-94
Slope
0.0043195
CONDUCTIVITY
3.69E-04
cm/sec

HYDROCON - 1.2
HYDRAULIC CONDUCTIVITY
Bouwer and Rice Method

Well: MW-23

PROJECT NAME: SKF-ASHEVILLE
PROJECT NUMBER: 70144.02
FIELD WORK DATE(S): 09-06-94

USER NAME: KAL
DATE: 10-28-94

Rw - BORING RADIUS (IN): 2.9375
L - SCREEN LENGTH (FT): 10
HT - SCREEN BASE TO WATER TABLE (FT): 26.98
START TIME (H,M,S): 0,0,0

Rc - WELL RADIUS (IN): 1
D - AQUIFER THICKNESS (FT): 100
STATIC WATER LEVEL (FT): 4.42

TIME (H,M,S)	DEPTH (FT)	TIME (H,M,S)	DEPTH (FT)
0,5,25.01999	4.43	0,0,9	4.96
0,4,25.01999	4.44	0,0,8.52	4.97
0,2,55.02	4.45	0,0,8.04	4.98
0,2,25.02	4.48	0,0,7.5	5
0,1,55.02	4.51	0,0,7.02	5.01
0,1,50.04	4.52	0,0,6.78	5.02
0,1,30	4.53	0,0,6.54	5.03
0,1,25.02	4.55	0,0,6.3	5.04
0,1,20.04	4.56	0,0,6	5.05
0,1,15	4.57	0,0,5.76	5.06
0,1,10.02	4.58	0,0,5.52	5.08
0,1,5.040001	4.59	0,0,5.28	5.09
0,1,0	4.6	0,0,5.04	5.1
0,0,55.02	4.62	0,0,4.8	5.11
0,0,50.04	4.63	0,0,4.5	5.13
0,0,45	4.66	0,0,4.26	5.15
0,0,40.02	4.67	0,0,4.02	5.17
0,0,35.04	4.69	0,0,3.78	5.18
0,0,30	4.73	0,0,3.54	5.2
0,0,25.02	4.77	0,0,3.3	5.22
0,0,20.04	4.8	0,0,3	5.24
0,0,14.04	4.86	0,0,2.76	5.26
0,0,13.8	4.87	0,0,2.52	5.29
0,0,12.78	4.88	0,0,2.28	5.32
0,0,12.54	4.89	0,0,2.04	5.34
0,0,11.76	4.9	0,0,1.8	5.4
0,0,11.52	4.91	0,0,1.5	5.45
0,0,10.5	4.92	0,0,1.26	5.53
0,0,10.26	4.93	0,0,1.02	5.64
0,0,9.3	4.94	0,0,.78	5.75

TIME (H,M,S)	DEPTH (FT)
0,0,.54	5.89
0,0,.3	5.99

(1/t) (ln(Yo/Yt))= 0.0163516

PARTIALLY PENETRATING: A= 2.77 B= 0.48

HYDRAULIC CONDUCTIVITY: 1.54E-05 ft/sec
4.70E-04 cm/sec

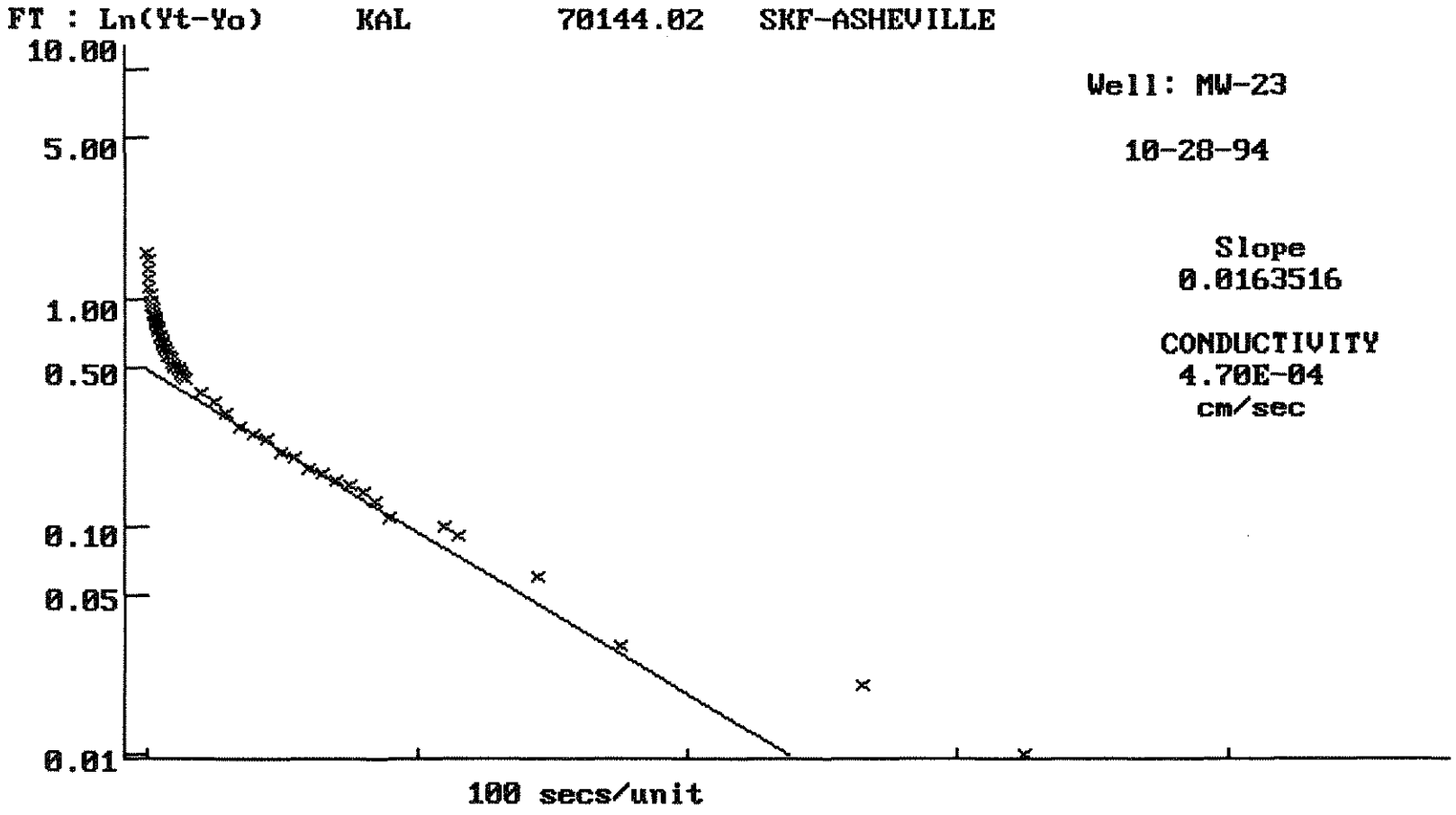
FT : Ln(Yt-Yo)
KAL
70144.02
SKF-ASHEVILLE
10.00
5.00
1.00
0.50
0.10
0.05
0.01
100 secs/unit
Well: MW-23
10-28-94
Slope
0.0163516
CONDUCTIVITY
4.70E-04
cm/sec

HYDROCON - 1.2
HYDRAULIC CONDUCTIVITY
Bouwer and Rice Method

Well: MW-24

PROJECT NAME: SKF-ASHEVILLE
PROJECT NUMBER: 70144.02
FIELD WORK DATE(S): 09-19-94

USER NAME: KAL
DATE: 10-28-94

Rw - BORING RADIUS (IN): 2.9375
L - SCREEN LENGTH (FT): 10
HT - SCREEN BASE TO WATER TABLE (FT): 24.4
START TIME (H,M,S): 0,0,0

Rc - WELL RADIUS (IN): 1
D - AQUIFER THICKNESS (FT): 100
STATIC WATER LEVEL (FT): 14.43

TIME (H,M,S)	DEPTH (FT)	TIME (H,M,S)	DEPTH (FT)
0,33,49.02002	14.47	0,1,24	15.49
0,27,49.02002	14.48	0,1,19.02	15.52
0,25,49.02002	14.49	0,1,14.04	15.55
0,23,49.02002	14.5	0,1,9	15.57
0,21,49.02002	14.51	0,1,4.019997	15.6
0,19,49.02002	14.52	0,0,59.04	15.63
0,17,49.02002	14.53	0,0,54	15.66
0,15,49.02002	14.55	0,0,49.02	15.69
0,13,49.02002	14.58	0,0,44.04	15.73
0,11,49.02002	14.62	0,0,39	15.77
0,9,19.02002	14.68	0,0,34.02	15.81
0,8,49.02002	14.71	0,0,29.04	15.87
0,8,19.01999	14.73	0,0,24	15.92
0,7,49.01999	14.75	0,0,19.02	15.98
0,7,19.01999	14.78	0,0,14.04	16.06
0,6,49.01999	14.82	0,0,8.52	16.17
0,6,19.01999	14.84	0,0,8.28	16.18
0,5,49.01999	14.88	0,0,8.04	16.19
0,5,19.01999	14.92	0,0,7.5	16.2
0,4,49.01999	14.96	0,0,7.26	16.21
0,4,19.01999	15	0,0,6.54	16.22
0,3,49.02	15.07	0,0,6.24	16.23
0,3,19.02	15.13	0,0,5.76	16.24
0,2,49.02	15.2	0,0,5.52	16.25
0,2,19.02	15.29	0,0,5.28	16.26
0,1,49.02	15.39	0,0,5.04	16.27
0,1,44.04	15.4	0,0,4.74	16.28
0,1,39	15.42	0,0,4.02	16.29
0,1,34.02	15.45	0,0,3.54	16.31
0,1,29.04	15.47	0,0,3.24	16.32

TIME (H,M,S)	DEPTH (FT)
0,0,3	16.34
0,0,2.28	16.37
0,0,1.5	16.42
0,0,.78	16.5

(1/t) (ln(Yo/Yt))= 0.0029530

PARTIALLY PENETRATING: A= 2.77 B= 0.48

HYDRAULIC CONDUCTIVITY: 2.75E-06 ft/sec
8.37E-05 cm/sec

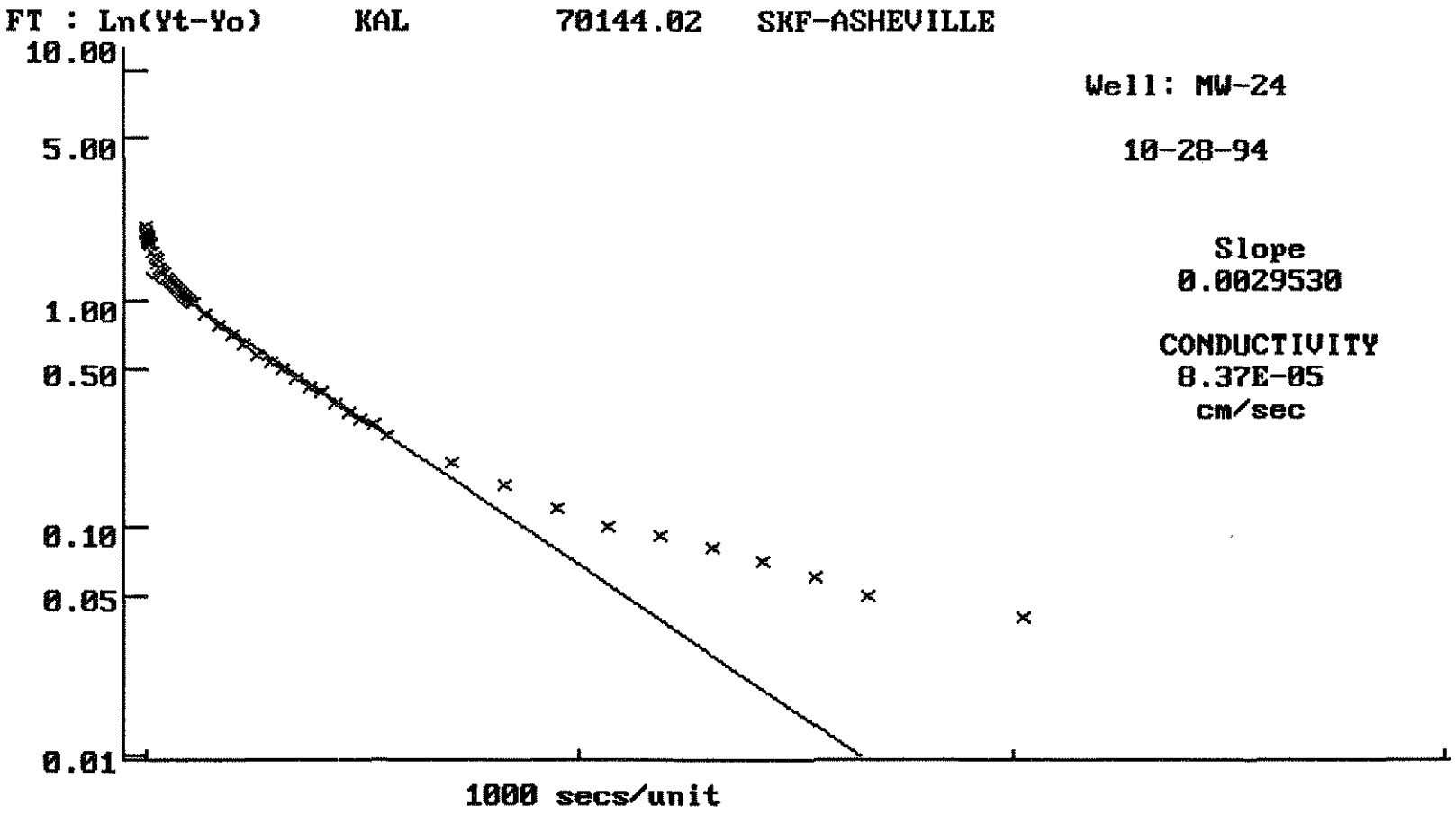
FT : Ln(Yt-Yo)
KAL
70144.02
SKF-ASHEVILLE
10.00
5.00
1.00
0.50
0.10
0.05
0.01
1000 secs/unit
Well: MW-24
10-28-94
Slope
0.0029530
CONDUCTIVITY
8.37E-05
cm/sec

HYDROCON - 1.2
HYDRAULIC CONDUCTIVITY
Bouwer and Rice Method

Well: MW-25

PROJECT NAME: SKF-ASHEVILLE
PROJECT NUMBER: 70144.02
FIELD WORK DATE(S): 09-19-94

USER NAME: KAL
DATE: 10-28-94

Rw - BORING RADIUS (IN): 2.03
L - SCREEN LENGTH (FT): 10
HT - SCREEN BASE TO WATER TABLE (FT): 10.39
START TIME (H,M,S): 0,0,0

Rc - WELL RADIUS (IN): 1
D - AQUIFER THICKNESS (FT): 100
STATIC WATER LEVEL (FT): 9.65

Rc was corrected for response in well screen filter material to 1.391 inches

---

TIME (H,M,S)	DEPTH (FT)	TIME (H,M,S)	DEPTH (FT)
0,11,47.88	9.68	0,0,33	10.74
0,8,47.88	9.69	0,0,28.02	10.78
0,8,17.88	9.71	0,0,22.98	10.83
0,7,47.88	9.72	0,0,18	10.91
0,7,17.88	9.73	0,0,13.02	11.02
0,6,47.88	9.75	0,0,7.74	11.22
0,6,18	9.77	0,0,7.5	11.23
0,5,48	9.78	0,0,7.26	11.24
0,5,18	9.82	0,0,7.02	11.25
0,4,48	9.85	0,0,6.78	11.27
0,4,18	9.9	0,0,6.48	11.29
0,3,48	9.97	0,0,6.24	11.3
0,3,18	10.06	0,0,6	11.31
0,2,48	10.19	0,0,5.76	11.32
0,2,18	10.32	0,0,5.52	11.33
0,1,48	10.47	0,0,5.28	11.35
0,1,43.02	10.48	0,0,4.98	11.37
0,1,37.98	10.49	0,0,4.74	11.38
0,1,33	10.51	0,0,4.5	11.39
0,1,28.02	10.53	0,0,4.26	11.41
0,1,22.98	10.54	0,0,4.02	11.43
0,1,18	10.56	0,0,3.78	11.45
0,1,13.02	10.58	0,0,3.48	11.46
0,1,7.980003	10.59	0,0,3	11.48
0,1,3	10.61	0,0,2.76	11.49
0,0,58.02	10.63	0,0,2.52	11.54
0,0,52.98	10.65	0,0,2.28	11.55
0,0,48	10.66	0,0,1.26	11.57
0,0,43.02	10.69	0,0,1.02	11.67
0,0,37.98	10.72		

(1/t) (ln(Yo/Yt))= 0.0073422

PARTIALLY PENETRATING: A= 3.28 B= 0.57

HYDRAULIC CONDUCTIVITY: 1.29E-05 ft/sec
3.93E-04 cm/sec

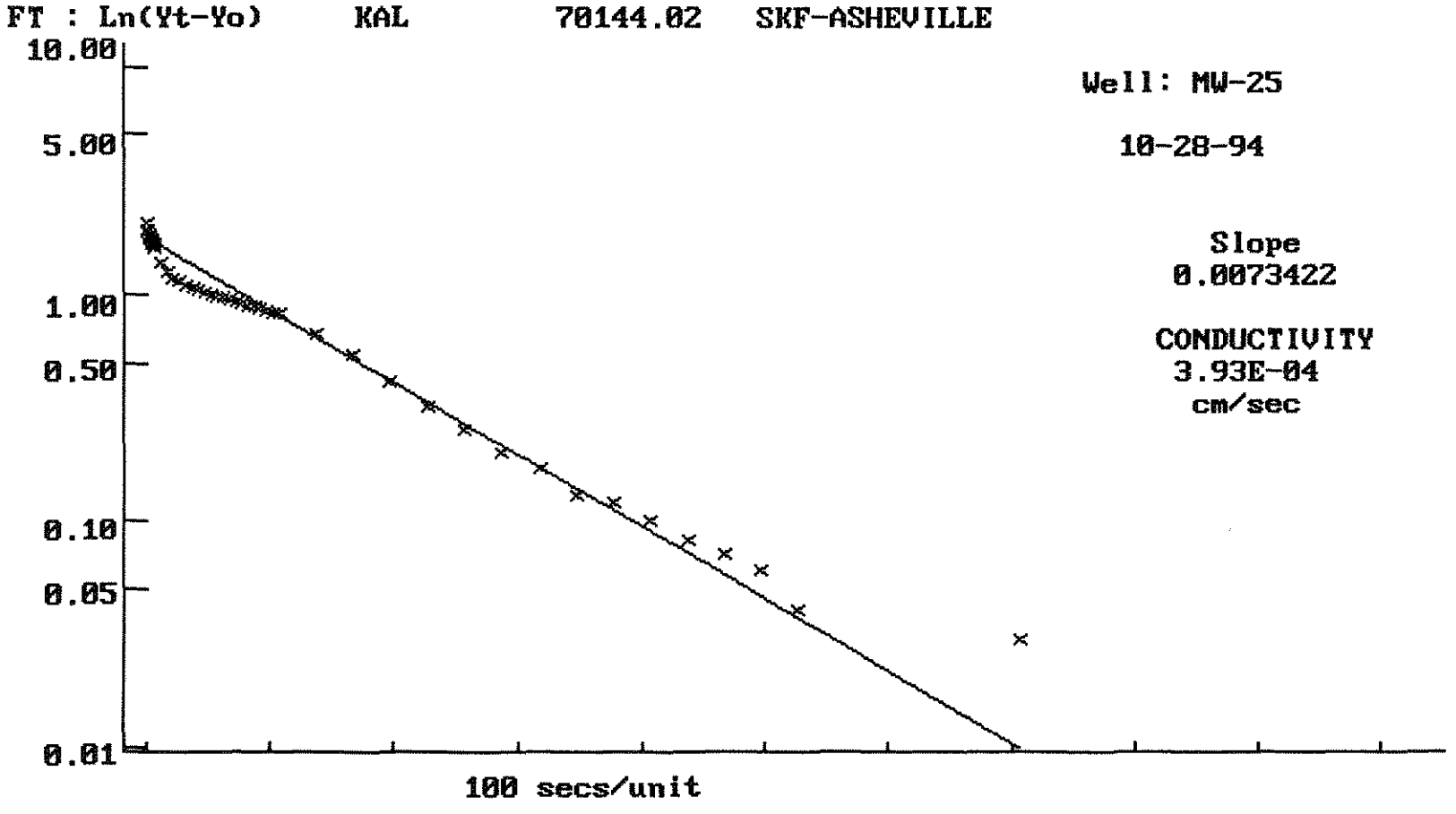
FT : Ln(Yt-Yo)
KAL
70144.02
SKF-ASHEVILLE
10.00
5.00
1.00
0.50
0.10
0.05
0.01
100 secs/unit
Well: MW-25
10-28-94
Slope
0.0073422
CONDUCTIVITY
3.93E-04
cm/sec

HYDROCON - 1.2
HYDRAULIC CONDUCTIVITY
Bouwer and Rice Method

Well: MW-26

PROJECT NAME: SKF-ASHEVILLE
PROJECT NUMBER: 70144.02
FIELD WORK DATE(S): 09-06-94

USER NAME: KAL
DATE: 10-28-94

Rw - BORING RADIUS (IN): 5.125
L - SCREEN LENGTH (FT): 10
HT - SCREEN BASE TO WATER TABLE (FT): 16.7
START TIME (H,M,S): 0,0,0

Rc - WELL RADIUS (IN): 1
D - AQUIFER THICKNESS (FT): 100
STATIC WATER LEVEL (FT): 1.68

TIME (H,M,S)	DEPTH (FT)	TIME (H,M,S)	DEPTH (FT)
0,1,54	1.89	0,0,15.24	3.23
0,1,48.96	1.91	0,0,15	3.24
0,1,43.98	1.93	0,0,14.76	3.25
0,1,39	1.95	0,0,14.46	3.26
0,1,33.96	1.96	0,0,14.22	3.27
0,1,28.98	1.99	0,0,13.98	3.28
0,1,24	2.02	0,0,13.5	3.3
0,1,18.96	2.05	0,0,13.26	3.32
0,1,13.98	2.08	0,0,12.96	3.34
0,1,9	2.13	0,0,12.48	3.35
0,1,3.959999	2.17	0,0,12.24	3.36
0,0,58.98	2.22	0,0,12	3.38
0,0,54	2.28	0,0,11.76	3.4
0,0,48.96	2.35	0,0,11.46	3.41
0,0,43.98	2.43	0,0,11.22	3.42
0,0,39	2.52	0,0,10.98	3.43
0,0,33.96	2.62	0,0,10.74	3.44
0,0,28.98	2.75	0,0,10.5	3.46
0,0,24	2.9	0,0,10.26	3.47
0,0,18.72	3.09	0,0,9.72	3.49
0,0,18	3.1	0,0,9.48	3.51
0,0,17.76	3.12	0,0,9.24	3.53
0,0,17.46	3.13	0,0,9	3.55
0,0,17.22	3.14	0,0,8.76	3.56
0,0,16.98	3.15	0,0,8.46	3.57
0,0,16.5	3.17	0,0,8.22	3.59
0,0,16.26	3.18	0,0,7.98	3.6
0,0,15.96	3.19	0,0,7.74	3.62
0,0,15.72	3.2	0,0,7.5	3.64
0,0,15.48	3.21	0,0,7.26	3.65

TIME (H,M,S)	DEPTH (FT)
0,0,6.96	3.67
0,0,6.72	3.68
0,0,6.48	3.7
0,0,6.24	3.72
0,0,6	3.74
0,0,5.76	3.75
0,0,5.46	3.78
0,0,5.22	3.81
0,0,4.98	3.87
0,0,4.74	3.93
0,0,4.5	3.96
0,0,3.96	3.98
0,0,3.72	4.04
0,0,3.48	4.07
0,0,3	4.12
0,0,2.76	4.23
0,0,1.98	4.71
0,0,.24	4.93

(1/t) (ln(Yo/Yt))= 0.0209869

PARTIALLY PENETRATING: A= 2.30 B= 0.36

HYDRAULIC CONDUCTIVITY: 1.52E-05 ft/sec
4.62E-04 cm/sec

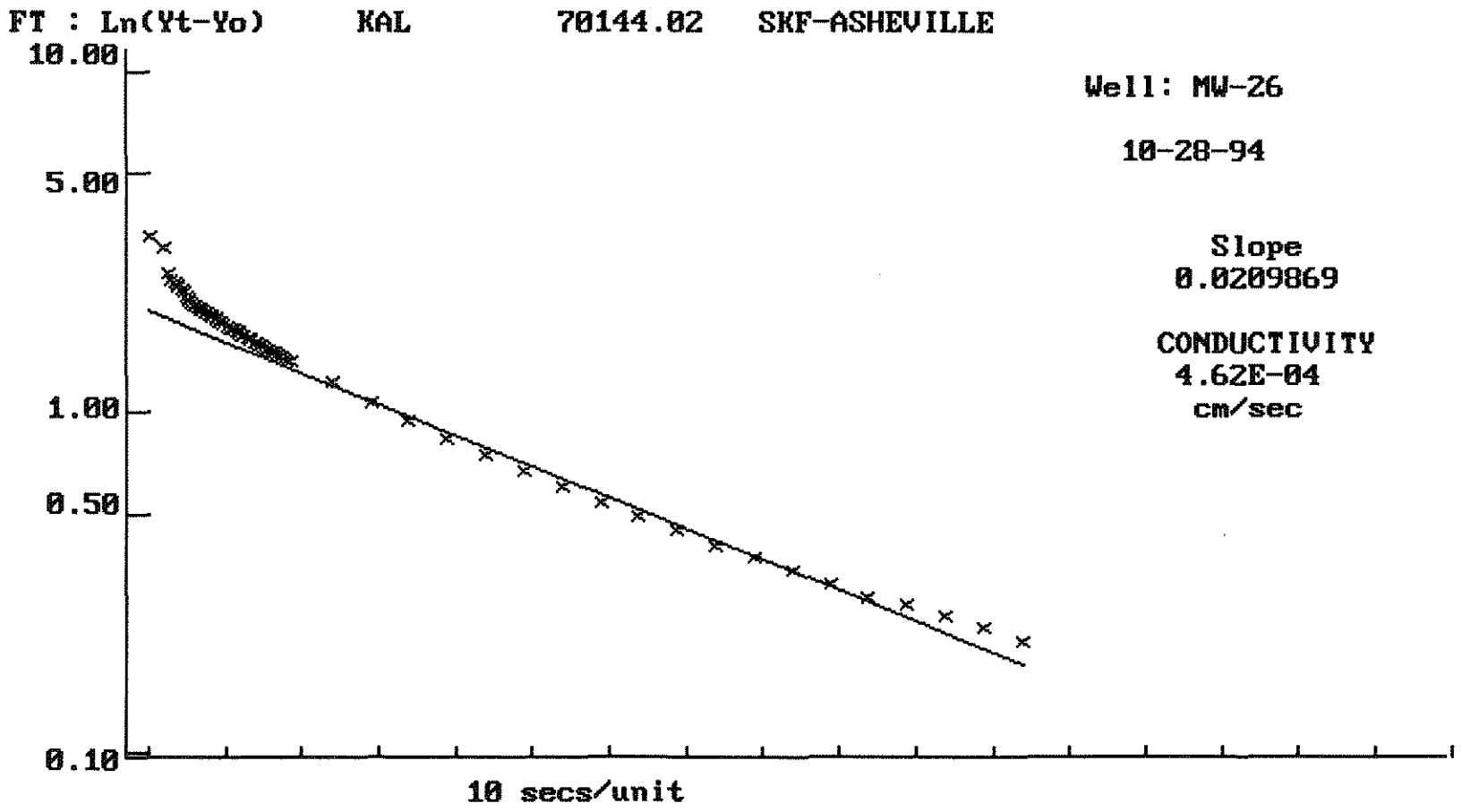
FT : Ln(Yt-Yo)
KAL
70144.02
SKF-ASHEVILLE
10.00
5.00
1.00
0.50
0.10
10 secs/unit
Well: MW-26
10-28-94
Slope
0.0209869
CONDUCTIVITY
4.62E-04
cm/sec

HYDROCON - 1.2
HYDRAULIC CONDUCTIVITY
Bouwer and Rice Method

Well: MW-27

PROJECT NAME: SKF-ASHEVILLE
PROJECT NUMBER: 70144.02
FIELD WORK DATE(S): 09-19-94

USER NAME: KAL
DATE: 10-28-94

Rw - BORING RADIUS (IN): 2.9375
L - SCREEN LENGTH (FT): 10
HT - SCREEN BASE TO WATER TABLE (FT): 13.4
START TIME (H,M,S): 0,0,0

Rc - WELL RADIUS (IN): 1
D - AQUIFER THICKNESS (FT): 100
STATIC WATER LEVEL (FT): 26.94

TIME (H,M,S)	DEPTH (FT)
0,13,42.12	26.98
0,11,42.12	26.99
0,8,12.12	27
0,7,12.12	27.01
0,6,42.12	27.02
0,6,12.23999	27.03
0,5,42.23999	27.04
0,5,12.23999	27.05
0,4,42.23999	27.08
0,4,12.24001	27.11
0,3,42.24001	27.15
0,3,12.24001	27.19
0,2,42.24001	27.26
0,2,12.24001	27.36
0,1,42.24	27.51
0,1,37.26	27.53
0,1,32.22	27.56
0,1,27.24	27.58
0,1,22.26	27.62
0,1,17.22	27.66
0,1,12.24	27.69
0,1,7.260002	27.73
0,1,2.220001	27.77
0,0,57.24	27.82
0,0,52.26	27.86
0,0,47.22	27.9
0,0,42.24	27.96
0,0,37.26	28.01
0,0,32.22	28.07
0,0,27.24	28.14
0,0,22.26	28.21
0,0,17.22	28.29
0,0,12.24	28.37
0,0,7.26	28.48
0,0,1.98	28.67
0,0,1.74	28.68
0,0,1.5	28.71
0,0,1.26	28.73
0,0,1.02	28.74
0,0,.72	28.77
0,0,.48	28.8
0,0,.24	28.85

(1/t) (ln(Yo/Yt))= 0.0090297

PARTIALLY PENETRATING: A= 2.77 B= 0.48

HYDRAULIC CONDUCTIVITY: 7.63E-06 ft/sec
2.33E-04 cm/sec

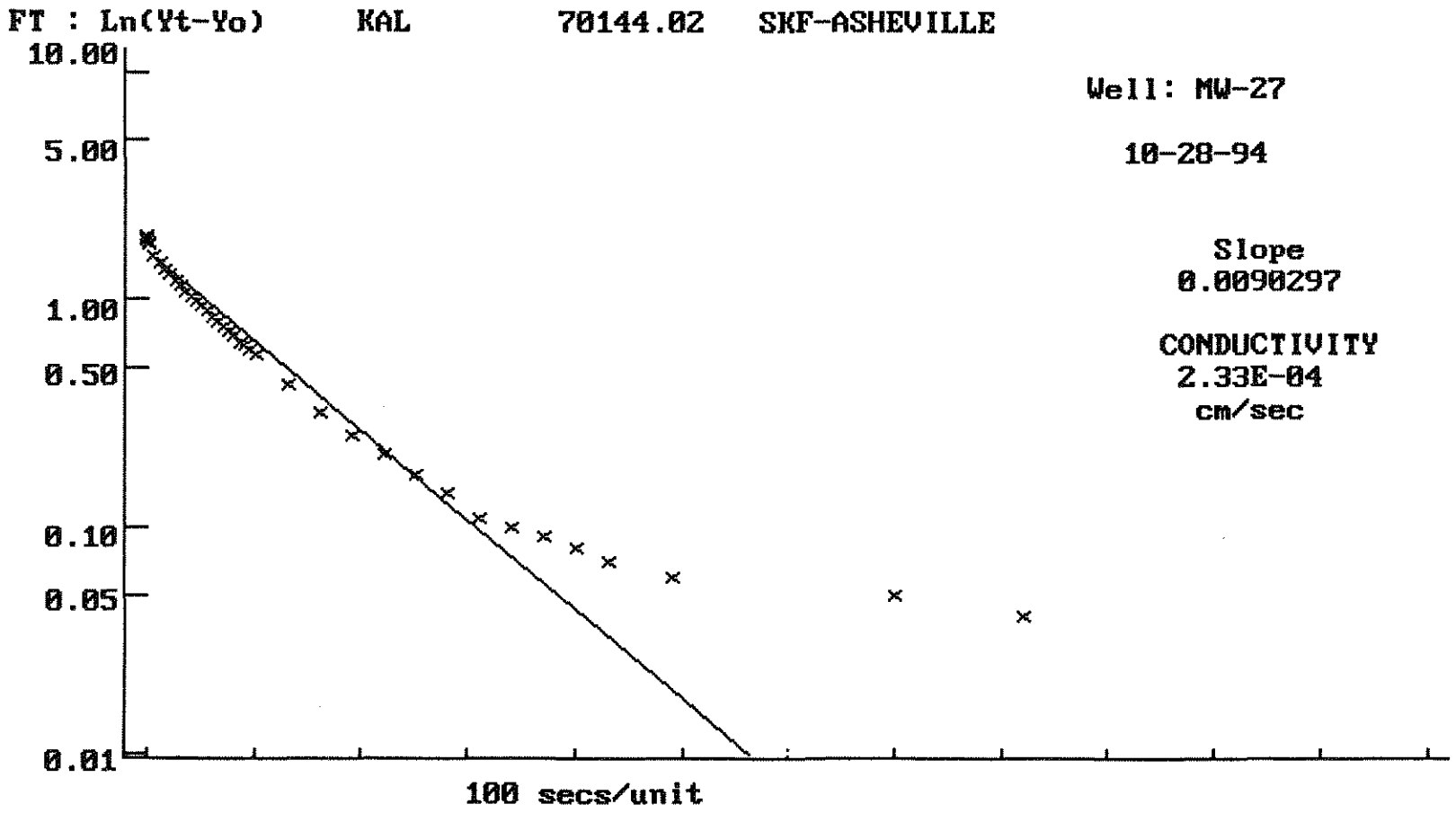
FT : Ln(Yt-Yo)
KAL
70144.02
SKF-ASHEVILLE
10.00
5.00
1.00
0.50
0.10
0.05
0.01
100 secs/unit
Well: MW-27
10-28-94
Slope
0.0090297
CONDUCTIVITY
2.33E-04
cm/sec

APPENDIX H

SEEPAGE VELOCITY AND VERTICAL GRADIENT CALCULATIONS

SEEPAGE VELOCITY CALCULATION
FOR SEPTEMBER 19, 1994

$$V = \frac{(K_{mean})(i)}{n_{eff}}$$

Where V = Seepage Velocity of Ground Water
K_{mean} = Geometric Mean Hydraulic Conductivity
i_{avg} = Average Horizontal Ground Water Gradient
n_{eff} = Effective Porosity (estimated)

Average seepage velocity of ground water in saprolite on northeast side of the site.

$K_{mean} = 4.0 \times 10^{-6}$ ft/sec
$i = 0.074$ ft/ft
$n_{eff} = 0.30$

$$V = \frac{(4.0 \times 10^{-6}\ \text{ft/sec})(86400\ \text{sec/day})(365\ \text{day/yr})(0.074\ \text{ft/ft})}{0.30} = \mathbf{31\ ft/yr}$$

Average seepage velocity of ground water in saprolite on southeast portion of the NC DOT property.

$K_{mean} = 4.0 \times 10^{-6}$ ft/sec
$i = 0.014$ ft/ft
$n_{eff} = 0.30$

$$V = \frac{(2.0 \times 10^{-6}\ \text{ft/sec})(86400\ \text{sec/day})(365\ \text{day/yr})(0.014\ \text{ft/ft})}{0.30} = \mathbf{29\ ft/yr}$$

Average seepage velocity of ground water in saprolite on northwest portion of the NC DOT property.

$K_{mean} = 2.0 \times 10^{-5}$ ft/sec

$i = 0.069$ ft/ft

$n_{eff} = 0.30$

$$V = \frac{(2.0 \times 10^{-5} \text{ ft/sec})(86400 \text{ sec/day})(365 \text{ day/yr})(0.069 \text{ ft/ft})}{0.30} = \mathbf{145 \text{ ft/yr}}$$

Average seepage velocity of ground water in bedrock on northeast side of the site.

$K_{mean} = 1.0 \times 10^{-6}$ ft/sec

$i = 0.074$ ft/ft

$n_{eff} = 0.10$

$$V = \frac{(1.0 \times 10^{-6} \text{ ft/sec})(86400 \text{ sec/day})(365 \text{ day/yr})(0.074 \text{ ft/ft})}{0.10} = \mathbf{23 \text{ ft/yr}}$$

Average seepage velocity of ground water in bedrock on the southwest side of the site.

$K_{mean} = 3.0 \times 10^{-6}$ ft/sec

$i = 0.084$ ft/ft

$n_{eff} = 0.10$

$$V = \frac{(3.0 \times 10^{-6} \text{ ft/sec})(86400 \text{ sec/day})(365 \text{ day/yr})(0.084 \text{ ft/ft})}{0.10} = \mathbf{79 \text{ ft/yr}}$$

Estimated average seepage velocity of ground water in saturated alluvium/saprolite on the Dotson property.

$K_{mean} = 3.0 \times 10^{-5}$ ft/sec

$i = 0.067$ ft/ft

$n_{eff} = 0.30$

$$V = \frac{(3.0 \times 10^{-5} \text{ ft/sec})(86400 \text{ sec/day})(365 \text{ day/yr})(0.067 \text{ ft/ft})}{0.30} = \mathbf{21 \text{ ft/yr}}$$

WORKSHEET FOR CALCULATING VERTICAL GRADIENTS

PROJECT/CLIENT: SKF USA, INC. - Asheville, NC
PROJECT NO.: 70144.01
WELL PAIR: MW-15/MW-15A
DATE: 24-Oct-94
BY: KAL

DATA INPUTS	Shallow Well MW-15	Deep Well MW-15A
Ground Surface Elevation:	2058.64	2058.55
Depth to the bottom of the bentonite seal:	10.00	42.00
Elevation of the bottom of the bentonite seal:(E1)	2048.64	2016.55
Depth to the bottom of the well screen:	32.00	44.00
Elevation of the bottom of the well screen:(E2)	2026.64	2014.55
Water table elevation:(E3)	2046.30	2046.86

SHALLOW WELL			DEEP WELL	
E1 or E3 *	2046.30		E1 or E3 *	2016.55
E2	2026.64		E2	2014.55
E3	2046.30		E3	2046.86

where:

E1 = Elevation of the bottom of the bentonite seal
E2 = Elevation of the bottom of the well screen
E3 = Water table elevation
* - Whichever is the lower value

THE VERTICAL GROUND WATER GRADIENT IS : 0.0268

WORKSHEET FOR CALCULATING VERTICAL GRADIENTS

PROJECT/CLIENT: SKF USA, INC. - Asheville, NC
PROJECT NO.: 70144.01
WELL PAIR: MW-16/MW-16A
DATE: 24-Oct-94
BY: KAL

DATA INPUTS	Shallow Well MW-16	Deep Well MW-16A
Ground Surface Elevation:	2059.40	2059.48
Depth to the bottom of the bentonite seal:	5.00	22.20
Elevation of the bottom of the bentonite seal:(E1)	2054.40	2037.28
Depth to the bottom of the well screen:	22.00	34.00
Elevation of the bottom of the well screen:(E2)	2037.40	2025.48
Water table elevation:(E3)	2052.84	2053.10

SHALLOW WELL			DEEP WELL	
E1 or E3 *	2052.84		E1 or E3 *	2037.28
E2	2037.40		E2	2025.48
E3	2052.84		E3	2053.10

where:

E1 = Elevation of the bottom of the bentonite seal
E2 = Elevation of the bottom of the well screen
E3 = Water table elevation
* - Whichever is the lower value

THE VERTICAL GROUND WATER GRADIENT IS : 0.0189

APPENDIX I

LABORATORY ANALYTICAL REPORTS FOR HYDROCONE® SAMPLES

RMT INC.
LABORATORIES

CLIENT: SKF-ASHEVILLE
SAMPLE #: 3033-003
PROJECT #: 70144.01
WORK ORDER #: 3033
WI DNR LAB ID: 113138520

REPORT DATE: 09/03/93
COLLECTION DATE: 08/16/93
STATION ID: HC-1-19

VOLATILE ORGANIC ANALYSIS REPORT

PARAMETER	RESULT	UNITS
1,2-Dichloroethene, total	<2.0	ug/L
Trichloroethene	<2.0	ug/L
Vinyl chloride	<1.0	ug/L

Mark A. Moritz 9/3/93
Approval Signature

744 Heartland Trail, P.O. Box 8923, Madison, WI 53708-8923, Phone:(608) 831-4444

RMT INC.
LABORATORIES

CLIENT: SKF-ASHEVILLE
SAMPLE #: 3033-001
PROJECT #: 70144.01
WORK ORDER #: 3033
WI DNR LAB ID: 113138520

REPORT DATE: 09/03/93
COLLECTION DATE: 08/17/93
STATION ID: HC-2-19

VOLATILE ORGANIC ANALYSIS REPORT

PARAMETER	RESULT	UNITS
1,2-Dichloroethene, total	<2.0	ug/L
Trichloroethene	<2.0	ug/L
Vinyl chloride	<1.0	ug/L

Mark D. Meeuth 9/7/93
Approval Signature

744 Heartland Trail, P.O. Box 8923, Madison, WI 53708-8923, Phone:(608) 831-4444

RMT INC.
LABORATORIES

CLIENT: SKF-ASHEVILLE
SAMPLE #: 3033-002
PROJECT #: 70144.01
WORK ORDER #: 3033
WI DNR LAB ID: 113138520

REPORT DATE: 09/03/93
COLLECTION DATE: 08/18/93
STATION ID: HC-5-29

VOLATILE ORGANIC ANALYSIS REPORT

PARAMETER	RESULT	UNITS
1,2-Dichloroethene, total	660	ug/L
Trichloroethene	3600	ug/L
Vinyl chloride	<100	ug/L

Mark A. Meerts 9/7/93
Approval Signature

744 Heartland Trail, P.O. Box 8923, Madison, WI 53708-8923, Phone:(608) 831-4444

RMT INC.
LABORATORIES

CLIENT: SKF-ASHEVILLE
SAMPLE #: 3033-004
PROJECT #: 70144.01
WORK ORDER #: 3033
WI DNR LAB ID: 113138520

REPORT DATE: 09/03/93
COLLECTION DATE: 08/19/93
STATION ID: HC-8-24

VOLATILE ORGANIC ANALYSIS REPORT

PARAMETER	RESULT	UNITS
1,2-Dichloroethene, total	<2.0	ug/L
Trichloroethene	<2.0	ug/L
Vinyl chloride	<1.0	ug/L

Mark A. Moritz 9/7/93
Approval Signature

744 Heartland Trail, P.O. Box 8923, Madison, WI 53708-8923, Phone:(608) 831-4444

RMT LABORATORIES 744 HEARTLAND TRAIL MADISON, WI 53717-1934 P.O. BOX 8923 MADISON, WI 53708-8923 608/831-4444 608/831-7530 FAX

CLIENT: SKF - ASHEVILLE
SAMPLE #: 5129-001
PROJECT #: 70144.02
WORK ORDER #: 5129
WI DNR LAB ID: 113138520

REPORT DATE: 07/29/94
COLLECTION DATE: 07/19/94
STATION ID: HC-10-15

VOLATILE ORGANICS ANALYSIS REPORT

COMPOUND	RESULT	UNITS
1,2-Dichloroethane	<100	ug/L
Trichloroethene	1300	ug/L
Vinyl chloride	<100	ug/L

Kari P. Mech 7-29-94
Approval Signature

RMT LABORATORIES 744 HEARTLAND TRAIL MADISON, WI 53717-1934 P.O. BOX 8923 MADISON, WI 53708-8923 608/831-4444 608/831-7530 FAX

CLIENT: SKF - ASHEVILLE
SAMPLE #: 5129-005
PROJECT #: 70144.02
WORK ORDER #: 5129
WI DNR LAB ID: 113138520

REPORT DATE: 07/29/94
COLLECTION DATE: 07/20/94
STATION ID: HC-14-12.5

VOLATILE ORGANICS ANALYSIS REPORT

COMPOUND	RESULT	UNITS
1,2-Dichloroethane	<1.0	ug/L
Trichloroethene	3.2	ug/L
Vinyl chloride	<1.0	ug/L

Ken P. Mack 7-29-94
Approval Signature

RMT LABORATORIES 744 HEARTLAND TRAIL MADISON, WI 53717-1934 P.O. BOX 8923 MADISON, WI 53708-8923 608/831-4444 608/831-7530 FAX

CLIENT: SKF - ASHEVILLE
SAMPLE #: 5129-008
PROJECT #: 70144.02
WORK ORDER #: 5129
WI DNR LAB ID: 113138520

REPORT DATE: 07/29/94
COLLECTION DATE: 07/21/94
STATION ID: HC-17-13

VOLATILE ORGANICS ANALYSIS REPORT

COMPOUND	RESULT	UNITS
1,2-Dichloroethane	<1.0	ug/L
Trichloroethene	13	ug/L
Vinyl chloride	<1.0	ug/L

Kevin P. Moch 7-29-94
Approval Signature

RMT LABORATORIES 744 HEARTLAND TRAIL MADISON, WI 53717-1934 P.O. BOX 8923 MADISON, WI 53708-8923 608/831-4444 608/831-7530 FAX

CLIENT: SKF - ASHEVILLE
SAMPLE #: 5129-009
PROJECT #: 70144.02
WORK ORDER #: 5129
WI DNR LAB ID: 113138520

REPORT DATE: 07/29/94
COLLECTION DATE: 07/21/94
STATION ID: HC-18-13

VOLATILE ORGANICS ANALYSIS REPORT

COMPOUND	RESULT	UNITS
1,2-Dichloroethane	<1.0	ug/L
Trichloroethene	2.1	ug/L
Vinyl chloride	<1.0	ug/L

Kari P. Meech 7-29-94
Approval Signature

RMT LABORATORIES 744 HEARTLAND TRAIL MADISON, WI 53717-1934 P.O. BOX 8923 MADISON, WI 53708-8923 608/831-4444 608/831-7530 FAX

CLIENT: SKF - ASHEVILLE
SAMPLE #: 5129-010
PROJECT #: 70144.02
WORK ORDER #: 5129
WI DNR LAB ID: 113138520

REPORT DATE: 07/29/94
COLLECTION DATE:
STATION ID: TRIP BLANK

VOLATILE ORGANICS ANALYSIS REPORT

COMPOUND	RESULT	UNITS
1,2-Dichloroethane	<1.0	ug/L
Trichloroethene	<1.0	ug/L
Vinyl chloride	<1.0	ug/L

Kevin P. Meek 7-29-94
Approval Signature

RMT INC. LABORATORIES

Madison, WI 53717
744 Heartland Trail
Phone (608) 831-4444
FAX (608) 831-7530

Fox Valley, WI
Columbus, OH
Milwaukee, WI

Nashville, TN
Greenville, SC

Augusta, GA
Lansing, MI

Chicago, IL
Los Angeles, CA

Cincinnati, OH
Madison, WI

F-268 (R2/92)
(Use Black Ink Only)

CHAIN OF CUSTODY RECORD

№ 047665

Bottles Prepared by: SDT
Date/Time: —

Project No.: 70144.02
Client: SICF - Asheville

Lab No. 5129	Yr. 94 Date	Time	Sample Station ID	Total Number Of Containers	Container Inventory: 40 ml septa vial									MATRIX: GW 85% 7/22/94	Comments:
001	7/19	16:24	HC-10-15	2	2										
002	7/19	14:28	HC-11-16	2	2										Will call
003	7/19	13:50	HC-12-12.5	2	2										Lab w/ Work order
004	7/20	8:15	HC-13-12.5	2	2										
005	7/20	9:50	HC-14-12.5	2	2										ON 7-22-94
006	7/20	17:17	HC-15-14	2	2										
007	7/21	8:45	HC-16-13	2	2										
008	7/21	11:53	HC-17-13	2	2										
009	7/21	14:00	HC-18-13	2	2										
010	—	—	Trip Blank	3	3										

Filtered (Yes/No)
Preserved (Code)

Code: A - None
B - HNO3
C - H_2SO_4
D - NaOH
E - HCl
F - _____

SAMPLER Relinquished by (Sig.)	Date/Time	Received by (Sig.)	Date/Time
① Kenneth A Lauber	7/21/94 15:00	② Fed EX Shipper Name & # 1785724371	7/21/94 17:39
Relinquished by (Sig.) ③	Date/Time	Received by (Sig.) ④ Shipper Name & #	Date/Time
Relinquished by (Sig.) ⑤ Fedex	7/22/94 10:30 am	Received by (Sig.) ⑥ Betty Nadelfeld Shipper Name & #	7/22/94 10:30 am

HAZARDS ASSOCIATED WITH SAMPLES

(For Lab Use Only)
Receipt Temp: 2.0°C
Receipt pH: Na

Seal: Intact/Not Intact
Seal #'s

APPENDIX J

LABORATORY ANALYTICAL REPORTS FOR GROUND WATER MONITORING WELLS

RMT LABORATORIES 744 HEARTLAND TRAIL · MADISON, WI · 53717-1934 · P.O. BOX 8923 · MADISON, WI · 53708-8923 · 608/831-4444 · 608/831-7530 FAX

CLIENT: SKF ASHEVILLE
SAMPLE #: 3644-009
PROJECT #: 70144.08
WORK ORDER #: 3644
WI DNR LAB ID: 113138520

REPORT DATE: 12/13/93
COLLECTION DATE: 11/30/93
STATION ID: MW 1

VOLATILE ORGANIC ANALYSIS REPORT

PARAMETER	RESULT	UNITS
Chloromethane	<2.0	ug/L
Bromomethane	<2.0	ug/L
Vinyl chloride	<1.0	ug/L
Chloroethane	<2.0	ug/L
Methylene chloride	<1.0	ug/L
Fluorotrichloromethane	<2.0	ug/L
1,1-Dichloroethene	<1.0	ug/L
1,1-Dichloroethane	<1.0	ug/L
1,2-Dichloroethene, total	<2.0	ug/L
Chloroform	<1.0	ug/L
1,2-Dichloroethane	<1.0	ug/L
1,1,1-Trichloroethane	<2.0	ug/L
Carbon tetrachloride	<1.0	ug/L
Bromodichloromethane	<1.0	ug/L
1,2-Dichloropropane	<1.0	ug/L
cis-1,3-Dichloropropene	<2.0	ug/L
Trichloroethene	<2.0	ug/L
Benzene	<1.0	ug/L
1,1,2-Trichloroethane	<1.0	ug/L
trans-1,3-Dichloropropene	<2.0	ug/L
Chlorodibromomethane	<2.0	ug/L
Bromoform	<2.0	ug/L
Tetrachloroethene	<2.0	ug/L
1,1,2,2-Tetrachloroethane	<2.0	ug/L
Toluene	<1.0	ug/L
Chlorobenzene	<1.0	ug/L
Ethylbenzene	<1.0	ug/L

Mark S. Meirt 12/16/93
Approval Signature

RMT LABORATORIES · 744 HEARTLAND TRAIL · MADISON, WI · 53717-1934 · P.O. BOX 8923 · MADISON, WI · 53708-8923 · 608/831-4444 · 608/831-7530 FAX

CLIENT: SKF ASHEVILLE
SAMPLE #: 3644-011
PROJECT #: 70144.08
WORK ORDER #: 3644
WI DNR LAB ID: 113138520

REPORT DATE: 12/13/93
COLLECTION DATE: 11/30/93
STATION ID: MW 2

VOLATILE ORGANIC ANALYSIS REPORT

PARAMETER	RESULT	UNITS
Chloromethane	<10	ug/L
Bromomethane	<10	ug/L
Vinyl chloride	<5.0	ug/L
Chloroethane	<10	ug/L
Methylene chloride	<5.0	ug/L
Fluorotrichloromethane	<10	ug/L
1,1-Dichloroethene	<5.0	ug/L
1,1-Dichloroethane	<5.0	ug/L
1,2-Dichloroethene, total	25	ug/L
Chloroform	<5.0	ug/L
1,2-Dichloroethane	<5.0	ug/L
1,1,1-Trichloroethane	<10	ug/L
Carbon tetrachloride	<5.0	ug/L
Bromodichloromethane	<5.0	ug/L
1,2-Dichloropropane	<5.0	ug/L
cis-1,3-Dichloropropene	<10	ug/L
Trichloroethene	110	ug/L
Benzene	<5.0	ug/L
1,1,2-Trichloroethane	<5.0	ug/L
trans-1,3-Dichloropropene	<10	ug/L
Chlorodibromomethane	<10	ug/L
Bromoform	<10	ug/L
Tetrachloroethene	<10	ug/L
1,1,2,2-Tetrachloroethane	<10	ug/L
Toluene	<5.0	ug/L
Chlorobenzene	<5.0	ug/L
Ethylbenzene	<5.0	ug/L

Mark A. Meirt 12/14/93
Approval Signature

RMT LABORATORIES · 744 HEARTLAND TRAIL · MADISON, WI · 53717-1934 · P.O. BOX 8923 · MADISON, WI · 53708-8923 · 608/831-4444 · 608/831-7530 FAX

CLIENT: SKF-ASHEVILLE
SAMPLE #: 3577-007
PROJECT #: 70144.01
WORK ORDER #: 3577
WI DNR LAB ID: 113138520

REPORT DATE: 11/24/93
COLLECTION DATE: 11/12/93
STATION ID: MW 4

VOLATILE ORGANIC ANALYSIS REPORT

PARAMETER	RESULT	UNITS
Chloromethane	<200	ug/L
Bromomethane	<200	ug/L
Vinyl chloride	<100	ug/L
Chloroethane	<200	ug/L
Methylene chloride	<100	ug/L
Fluorotrichloromethane	<200	ug/L
1,1-Dichloroethene	<100	ug/L
1,1-Dichloroethane	<100	ug/L
1,2-Dichloroethene, total	740	ug/L
Chloroform	<100	ug/L
1,2-Dichloroethane	<100	ug/L
1,1,1-Trichloroethane	<200	ug/L
Carbon tetrachloride	<100	ug/L
Bromodichloromethane	<100	ug/L
1,2-Dichloropropane	<100	ug/L
cis-1,3-Dichloropropene	<200	ug/L
Trichloroethene	1500	ug/L
Benzene	<100	ug/L
1,1,2-Trichloroethane	<100	ug/L
trans-1,3-Dichloropropene	<200	ug/L
Chlorodibromomethane	<200	ug/L
Bromoform	<200	ug/L
Tetrachloroethene	<200	ug/L
1,1,2,2-Tetrachloroethane	<200	ug/L
Toluene	<100	ug/L
Chlorobenzene	<100	ug/L
Ethylbenzene	<100	ug/L

Mark H. Moritz 11/29/93
Approval Signature

RMT LABORATORIES · 744 HEARTLAND TRAIL · MADISON, WI · 53717-1934 · P.O. BOX 8923 · MADISON, WI · 53708-8923 · 608/831-4444 · 608/831-7530 FAX

CLIENT: SKF-ASHEVILLE
SAMPLE #: 3577-006
PROJECT #: 70144.01
WORK ORDER #: 3577
WI DNR LAB ID: 113138520

REPORT DATE: 11/24/93
COLLECTION DATE: 11/12/93
STATION ID: MW 5

VOLATILE ORGANIC ANALYSIS REPORT

PARAMETER	RESULT	UNITS
Chloromethane	<500	ug/L
Bromomethane	<500	ug/L
Vinyl chloride	<250	ug/L
Chloroethane	<500	ug/L
Methylene chloride	<250	ug/L
Fluorotrichloromethane	<500	ug/L
1,1-Dichloroethene	<250	ug/L
1,1-Dichloroethane	<250	ug/L
1,2-Dichloroethene, total	<500	ug/L
Chloroform	<250	ug/L
1,2-Dichloroethane	<250	ug/L
1,1,1-Trichloroethane	<500	ug/L
Carbon tetrachloride	<250	ug/L
Bromodichloromethane	<250	ug/L
1,2-Dichloropropane	<250	ug/L
cis-1,3-Dichloropropene	<500	ug/L
Trichloroethene	6400	ug/L
Benzene	<250	ug/L
1,1,2-Trichloroethane	<250	ug/L
trans-1,3-Dichloropropene	<500	ug/L
Chlorodibromomethane	<500	ug/L
Bromoform	<500	ug/L
Tetrachloroethene	<500	ug/L
1,1,2,2-Tetrachloroethane	<500	ug/L
Toluene	<250	ug/L
Chlorobenzene	<250	ug/L
Ethylbenzene	<250	ug/L

Mark A. Meeuth 11/29/93
Approval Signature

RMT LABORATORIES · 744 HEARTLAND TRAIL · MADISON, WI · 53717-1934 · P.O. BOX 8923 · MADISON, WI · 53708-8923 · 608/831-4444 · 608/831-7530 FAX

CLIENT: SKF ASHEVILLE
SAMPLE #: 3644-010
PROJECT #: 70144.08
WORK ORDER #: 3644
WI DNR LAB ID: 113138520

REPORT DATE: 12/13/93
COLLECTION DATE: 11/30/93
STATION ID: MW 6

VOLATILE ORGANIC ANALYSIS REPORT

PARAMETER	RESULT	UNITS
Chloromethane	<2.0	ug/L
Bromomethane	<2.0	ug/L
Vinyl chloride	<1.0	ug/L
Chloroethane	<2.0	ug/L
Methylene chloride	<1.0	ug/L
Fluorotrichloromethane	<2.0	ug/L
1,1-Dichloroethene	<1.0	ug/L
1,1-Dichloroethane	<1.0	ug/L
1,2-Dichloroethene, total	<2.0	ug/L
Chloroform	<1.0	ug/L
1,2-Dichloroethane	<1.0	ug/L
1,1,1-Trichloroethane	<2.0	ug/L
Carbon tetrachloride	<1.0	ug/L
Bromodichloromethane	<1.0	ug/L
1,2-Dichloropropane	<1.0	ug/L
cis-1,3-Dichloropropene	<2.0	ug/L
Trichloroethene	<2.0	ug/L
Benzene	<1.0	ug/L
1,1,2-Trichloroethane	<1.0	ug/L
trans-1,3-Dichloropropene	<2.0	ug/L
Chlorodibromomethane	<2.0	ug/L
Bromoform	<2.0	ug/L
Tetrachloroethene	<2.0	ug/L
1,1,2,2-Tetrachloroethane	<2.0	ug/L
Toluene	<1.0	ug/L
Chlorobenzene	<1.0	ug/L
Ethylbenzene	<1.0	ug/L

Mark A. Mientz 12/16/93
Approval Signature

RMT LABORATORIES · 744 HEARTLAND TRAIL · MADISON, WI · 53717-1934 · P.O. BOX 8923 · MADISON, WI · 53708-8923 · 608/831-4444 · 608/831-7530 FAX

CLIENT: SKF ASHEVILLE
SAMPLE #: 3644-012
PROJECT #: 70144.08
WORK ORDER #: 3644
WI DNR LAB ID: 113138520

REPORT DATE: 12/13/93
COLLECTION DATE: 11/30/93
STATION ID: MW 7

VOLATILE ORGANIC ANALYSIS REPORT

PARAMETER	RESULT	UNITS
Chloromethane	<2.0	ug/L
Bromomethane	<2.0	ug/L
Vinyl chloride	<1.0	ug/L
Chloroethane	<2.0	ug/L
Methylene chloride	<1.0	ug/L
Fluorotrichloromethane	<2.0	ug/L
1,1-Dichloroethene	<1.0	ug/L
1,1-Dichloroethane	<1.0	ug/L
1,2-Dichloroethene, total	3.8	ug/L
Chloroform	<1.0	ug/L
1,2-Dichloroethane	<1.0	ug/L
1,1,1-Trichloroethane	<2.0	ug/L
Carbon tetrachloride	<1.0	ug/L
Bromodichloromethane	<1.0	ug/L
1,2-Dichloropropane	<1.0	ug/L
cis-1,3-Dichloropropene	<2.0	ug/L
Trichloroethene	14	ug/L
Benzene	<1.0	ug/L
1,1,2-Trichloroethane	<1.0	ug/L
trans-1,3-Dichloropropene	<2.0	ug/L
Chlorodibromomethane	<2.0	ug/L
Bromoform	<2.0	ug/L
Tetrachloroethene	<2.0	ug/L
1,1,2,2-Tetrachloroethane	<2.0	ug/L
Toluene	<1.0	ug/L
Chlorobenzene	<1.0	ug/L
Ethylbenzene	<1.0	ug/L

Mark A. Moritz 12/14/93
Approval Signature

RMT LABORATORIES · 744 HEARTLAND TRAIL · MADISON, WI · 53717-1934 · P.O. BOX 8923 · MADISON, WI · 53708-8923 · 608/831-4444 · 608/831-7530 FAX

CLIENT: SKF ASHEVILLE
SAMPLE #: 3644-013
PROJECT #: 70144.08
WORK ORDER #: 3644
WI DNR LAB ID: 113138520

REPORT DATE: 12/13/93
COLLECTION DATE: 11/30/93
STATION ID: MW 8

VOLATILE ORGANIC ANALYSIS REPORT

PARAMETER	RESULT	UNITS
Chloromethane	<2.0	ug/L
Bromomethane	<2.0	ug/L
Vinyl chloride	<1.0	ug/L
Chloroethane	<2.0	ug/L
Methylene chloride	<1.0	ug/L
Fluorotrichloromethane	<2.0	ug/L
1,1-Dichloroethene	<1.0	ug/L
1,1-Dichloroethane	<1.0	ug/L
1,2-Dichloroethene, total	<2.0	ug/L
Chloroform	1.4	ug/L
1,2-Dichloroethane	<1.0	ug/L
1,1,1-Trichloroethane	<2.0	ug/L
Carbon tetrachloride	<1.0	ug/L
Bromodichloromethane	<1.0	ug/L
1,2-Dichloropropane	<1.0	ug/L
cis-1,3-Dichloropropene	<2.0	ug/L
Trichloroethene	<2.0	ug/L
Benzene	<1.0	ug/L
1,1,2-Trichloroethane	<1.0	ug/L
trans-1,3-Dichloropropene	<2.0	ug/L
Chlorodibromomethane	<2.0	ug/L
Bromoform	<2.0	ug/L
Tetrachloroethene	<2.0	ug/L
1,1,2,2-Tetrachloroethane	<2.0	ug/L
Toluene	<1.0	ug/L
Chlorobenzene	<1.0	ug/L
Ethylbenzene	<1.0	ug/L

Mark H. Moritz 12/16/93
Approval Signature

RMT LABORATORIES · 744 HEARTLAND TRAIL · MADISON, WI · 53717-1934 · P.O. BOX 8923 · MADISON, WI · 53708-8923 · 608/831-4444 · 608/831-7530 FAX

CLIENT: SKF ASHEVILLE
SAMPLE #: 3644-014
PROJECT #: 70144.08
WORK ORDER #: 3644
WI DNR LAB ID: 113138520

REPORT DATE: 12/14/93
COLLECTION DATE: 11/30/93
STATION ID: MW 9

VOLATILE ORGANIC ANALYSIS REPORT

PARAMETER	RESULT	UNITS
Chloromethane	<400	ug/L
Bromomethane	<400	ug/L
Vinyl chloride	<200	ug/L
Chloroethane	<400	ug/L
Methylene chloride	<200	ug/L
Fluorotrichloromethane	<400	ug/L
1,1-Dichloroethene	<200	ug/L
1,1-Dichloroethane	<200	ug/L
1,2-Dichloroethene, total	<400	ug/L
Chloroform	<200	ug/L
1,2-Dichloroethane	<200	ug/L
1,1,1-Trichloroethane	<400	ug/L
Carbon tetrachloride	<200	ug/L
Bromodichloromethane	<200	ug/L
1,2-Dichloropropane	<200	ug/L
cis-1,3-Dichloropropene	<400	ug/L
Trichloroethene	3000	ug/L
Benzene	<200	ug/L
1,1,2-Trichloroethane	<200	ug/L
trans-1,3-Dichloropropene	<400	ug/L
Chlorodibromomethane	<400	ug/L
Bromoform	<400	ug/L
Tetrachloroethene	<400	ug/L
1,1,2,2-Tetrachloroethane	<400	ug/L
Toluene	<200	ug/L
Chlorobenzene	<200	ug/L
Ethylbenzene	<200	ug/L

Mark H. Meirtz 12/16/93
Approval Signature

RMT LABORATORIES · 744 HEARTLAND TRAIL · MADISON, WI · 53717-1934 · P.O. BOX 8923 · MADISON, WI · 53708-8923 · 608/831-4444 · 608/831-7530 FAX

CLIENT: SKF ASHEVILLE
SAMPLE #: 3644-015
PROJECT #: 70144.08
WORK ORDER #: 3644
WI DNR LAB ID: 113138520

REPORT DATE: 12/13/93
COLLECTION DATE: 11/30/93
STATION ID: MW 10

VOLATILE ORGANIC ANALYSIS REPORT

PARAMETER	RESULT	UNITS
Chloromethane	<100	ug/L
Bromomethane	<100	ug/L
Vinyl chloride	<50	ug/L
Chloroethane	<100	ug/L
Methylene chloride	<50	ug/L
Fluorotrichloromethane	<100	ug/L
1,1-Dichloroethene	<50	ug/L
1,1-Dichloroethane	<50	ug/L
1,2-Dichloroethene, total	1200	ug/L
Chloroform	<50	ug/L
1,2-Dichloroethane	<50	ug/L
1,1,1-Trichloroethane	<100	ug/L
Carbon tetrachloride	<50	ug/L
Bromodichloromethane	<50	ug/L
1,2-Dichloropropane	<50	ug/L
cis-1,3-Dichloropropene	<100	ug/L
Trichloroethene	220	ug/L
Benzene	<50	ug/L
1,1,2-Trichloroethane	<50	ug/L
trans-1,3-Dichloropropene	<100	ug/L
Chlorodibromomethane	<100	ug/L
Bromoform	<100	ug/L
Tetrachloroethene	<100	ug/L
1,1,2,2-Tetrachloroethane	<100	ug/L
Toluene	<50	ug/L
Chlorobenzene	<50	ug/L
Ethylbenzene	<50	ug/L

Mark H. Mintz 12/14/93
Approval Signature

RMT LABORATORIES · 744 HEARTLAND TRAIL · MADISON, WI · 53717-1934 · P.O. BOX 8923 · MADISON, WI · 53708-8923 · 608/831-4444 · 608/831-7530 FAX

CLIENT: SKF-ASHEVILLE
SAMPLE #: 3577-003
PROJECT #: 70144.01
WORK ORDER #: 3577
WI DNR LAB ID: 113138520

REPORT DATE: 11/24/93
COLLECTION DATE: 11/11/93
STATION ID: MW 11

VOLATILE ORGANIC ANALYSIS REPORT

PARAMETER	RESULT	UNITS
Chloromethane	<2.0	ug/L
Bromomethane	<2.0	ug/L
Vinyl chloride	<1.0	ug/L
Chloroethane	<2.0	ug/L
Methylene chloride	<1.0	ug/L
Fluorotrichloromethane	<2.0	ug/L
1,1-Dichloroethene	<1.0	ug/L
1,1-Dichloroethane	<1.0	ug/L
1,2-Dichloroethene, total	<2.0	ug/L
Chloroform	<1.0	ug/L
1,2-Dichloroethane	<1.0	ug/L
1,1,1-Trichloroethane	<2.0	ug/L
Carbon tetrachloride	<1.0	ug/L
Bromodichloromethane	<1.0	ug/L
1,2-Dichloropropane	<1.0	ug/L
cis-1,3-Dichloropropene	<2.0	ug/L
Trichloroethene	<2.0	ug/L
Benzene	<1.0	ug/L
1,1,2-Trichloroethane	<1.0	ug/L
trans-1,3-Dichloropropene	<2.0	ug/L
Chlorodibromomethane	<2.0	ug/L
Bromoform	<2.0	ug/L
Tetrachloroethene	<2.0	ug/L
1,1,2,2-Tetrachloroethane	<2.0	ug/L
Toluene	<1.0	ug/L
Chlorobenzene	<1.0	ug/L
Ethylbenzene	<1.0	ug/L

Mark A. Meinz 11/29/93
Approval Signature

RMT LABORATORIES · 744 HEARTLAND TRAIL · MADISON, WI · 53717-1934 · P.O. BOX 8923 · MADISON, WI · 53708-8923 · 608/831-4444 · 608/831-7530 FAX

CLIENT: SKF ASHEVILLE
SAMPLE #: 3644-002
PROJECT #: 70144.08
WORK ORDER #: 3644
WI DNR LAB ID: 113138520

REPORT DATE: 12/13/93
COLLECTION DATE: 11/29/93
STATION ID: MW 12

VOLATILE ORGANIC ANALYSIS REPORT

PARAMETER	RESULT	UNITS
Chloromethane	<2.0	ug/L
Bromomethane	<2.0	ug/L
Vinyl chloride	<1.0	ug/L
Chloroethane	<2.0	ug/L
Methylene chloride	<1.0	ug/L
Fluorotrichloromethane	<2.0	ug/L
1,1-Dichloroethene	<1.0	ug/L
1,1-Dichloroethane	<1.0	ug/L
1,2-Dichloroethene, total	<2.0	ug/L
Chloroform	<1.0	ug/L
1,2-Dichloroethane	<1.0	ug/L
1,1,1-Trichloroethane	<2.0	ug/L
Carbon tetrachloride	<1.0	ug/L
Bromodichloromethane	<1.0	ug/L
1,2-Dichloropropane	<1.0	ug/L
cis-1,3-Dichloropropene	<2.0	ug/L
Trichloroethene	<2.0	ug/L
Benzene	<1.0	ug/L
1,1,2-Trichloroethane	<1.0	ug/L
trans-1,3-Dichloropropene	<2.0	ug/L
Chlorodibromomethane	<2.0	ug/L
Bromoform	<2.0	ug/L
Tetrachloroethene	<2.0	ug/L
1,1,2,2-Tetrachloroethane	<2.0	ug/L
Toluene	<1.0	ug/L
Chlorobenzene	<1.0	ug/L
Ethylbenzene	<1.0	ug/L

Mark A. Mieritz 12/16/93
Approval Signature

RMT LABORATORIES · 744 HEARTLAND TRAIL · MADISON, WI · 53717-1934 · P.O. BOX 8923 · MADISON, WI · 53708-8923 · 608/831-4444 · 608/831-7530 FAX

CLIENT: SKF ASHEVILLE
SAMPLE #: 3644-004
PROJECT #: 70144.08
WORK ORDER #: 3644
WI DNR LAB ID: 113138520

REPORT DATE: 12/13/93
COLLECTION DATE: 11/29/93
STATION ID: MW 13

VOLATILE ORGANIC ANALYSIS REPORT

PARAMETER	RESULT	UNITS
Chloromethane	<2.0	ug/L
Bromomethane	<2.0	ug/L
Vinyl chloride	29	ug/L
Chloroethane	<2.0	ug/L
Methylene chloride	<1.0	ug/L
Fluorotrichloromethane	<2.0	ug/L
1,1-Dichloroethene	<1.0	ug/L
1,1-Dichloroethane	4.7	ug/L
1,2-Dichloroethene, total	<2.0	ug/L
Chloroform	<1.0	ug/L
1,2-Dichloroethane	<1.0	ug/L
1,1,1-Trichloroethane	<2.0	ug/L
Carbon tetrachloride	<1.0	ug/L
Bromodichloromethane	<1.0	ug/L
1,2-Dichloropropane	<1.0	ug/L
cis-1,3-Dichloropropene	<2.0	ug/L
Trichloroethene	<2.0	ug/L
Benzene	<1.0	ug/L
1,1,2-Trichloroethane	<1.0	ug/L
trans-1,3-Dichloropropene	<2.0	ug/L
Chlorodibromomethane	<2.0	ug/L
Bromoform	<2.0	ug/L
Tetrachloroethene	<2.0	ug/L
1,1,2,2-Tetrachloroethane	<2.0	ug/L
Toluene	<1.0	ug/L
Chlorobenzene	<1.0	ug/L
Ethylbenzene	<1.0	ug/L

Mark H. Mieritz 12/16/93
Approval Signature

RMT LABORATORIES · 744 HEARTLAND TRAIL · MADISON, WI · 53717-1934 · P.O. BOX 8923 · MADISON, WI · 53708-8923 · 608/831-4444 · 608/831-7530 FAX

CLIENT: SKF ASHEVILLE
SAMPLE #: 3644-016
PROJECT #: 70144.08
WORK ORDER #: 3644
WI DNR LAB ID: 113138520

REPORT DATE: 12/13/93
COLLECTION DATE: 11/30/93
STATION ID: MW 14

VOLATILE ORGANIC ANALYSIS REPORT

PARAMETER	RESULT	UNITS
Chloromethane	<100	ug/L
Bromomethane	<100	ug/L
Vinyl chloride	<50	ug/L
Chloroethane	<100	ug/L
Methylene chloride	<50	ug/L
Fluorotrichloromethane	<100	ug/L
1,1-Dichloroethene	<50	ug/L
1,1-Dichloroethane	<50	ug/L
1,2-Dichloroethene, total	<100	ug/L
Chloroform	<50	ug/L
1,2-Dichloroethane	<50	ug/L
1,1,1-Trichloroethane	<100	ug/L
Carbon tetrachloride	<50	ug/L
Bromodichloromethane	<50	ug/L
1,2-Dichloropropane	<50	ug/L
cis-1,3-Dichloropropene	<100	ug/L
Trichloroethene	520	ug/L
Benzene	<50	ug/L
1,1,2-Trichloroethane	<50	ug/L
trans-1,3-Dichloropropene	<100	ug/L
Chlorodibromomethane	<100	ug/L
Bromoform	<100	ug/L
Tetrachloroethene	<100	ug/L
1,1,2,2-Tetrachloroethane	<100	ug/L
Toluene	<50	ug/L
Chlorobenzene	<50	ug/L
Ethylbenzene	<50	ug/L

Mark A. Mieritz 12/16/93
Approval Signature

RMT LABORATORIES · 744 HEARTLAND TRAIL · MADISON, WI · 53717-1934 · P.O. BOX 8923 · MADISON, WI · 53708-8923 · 608/831-4444 · 608/831-7530 FAX

CLIENT: SKF ASHEVILLE
SAMPLE #: 3644-007
PROJECT #: 70144.08
WORK ORDER #: 3644
WI DNR LAB ID: 113138520

REPORT DATE: 12/13/93
COLLECTION DATE: 11/30/93
STATION ID: MW 15

VOLATILE ORGANIC ANALYSIS REPORT

PARAMETER	RESULT	UNITS
Chloromethane	<2.0	ug/L
Bromomethane	<2.0	ug/L
Vinyl chloride	<1.0	ug/L
Chloroethane	<2.0	ug/L
Methylene chloride	<1.0	ug/L
Fluorotrichloromethane	<2.0	ug/L
1,1-Dichloroethene	2.5	ug/L
1,1-Dichloroethane	1.4	ug/L
1,2-Dichloroethene, total	<2.0	ug/L
Chloroform	1.3	ug/L
1,2-Dichloroethane	<1.0	ug/L
1,1,1-Trichloroethane	15	ug/L
Carbon tetrachloride	<1.0	ug/L
Bromodichloromethane	<1.0	ug/L
1,2-Dichloropropane	<1.0	ug/L
cis-1,3-Dichloropropene	<2.0	ug/L
Trichloroethene	<2.0	ug/L
Benzene	<1.0	ug/L
1,1,2-Trichloroethane	<1.0	ug/L
trans-1,3-Dichloropropene	<2.0	ug/L
Chlorodibromomethane	<2.0	ug/L
Bromoform	<2.0	ug/L
Tetrachloroethene	<2.0	ug/L
1,1,2,2-Tetrachloroethane	<2.0	ug/L
Toluene	<1.0	ug/L
Chlorobenzene	<1.0	ug/L
Ethylbenzene	<1.0	ug/L

Mark A. Meirt 12/16/93
Approval Signature

RMT LABORATORIES · 744 HEARTLAND TRAIL · MADISON, WI · 53717-1934 · P.O. BOX 8923 · MADISON, WI · 53708-8923 · 608/831-4444 · 608/831-7530 FAX

CLIENT: SKF-ASHEVILLE
SAMPLE #: 3577-002
PROJECT #: 70144.01
WORK ORDER #: 3577
WI DNR LAB ID: 113138520

REPORT DATE: 11/24/93
COLLECTION DATE: 11/11/93
STATION ID: MW 15A

VOLATILE ORGANIC ANALYSIS REPORT

PARAMETER	RESULT	UNITS
Chloromethane	<2.0	ug/L
Bromomethane	<2.0	ug/L
Vinyl chloride	<1.0	ug/L
Chloroethane	<2.0	ug/L
Methylene chloride	<1.0	ug/L
Fluorotrichloromethane	<2.0	ug/L
1,1-Dichloroethene	1.3	ug/L
1,1-Dichloroethane	1.0	ug/L
1,2-Dichloroethene, total	<2.0	ug/L
Chloroform	5.5	ug/L
1,2-Dichloroethane	<1.0	ug/L
1,1,1-Trichloroethane	5.0	ug/L
Carbon tetrachloride	<1.0	ug/L
Bromodichloromethane	<1.0	ug/L
1,2-Dichloropropane	<1.0	ug/L
cis-1,3-Dichloropropene	<2.0	ug/L
Trichloroethene	<2.0	ug/L
Benzene	<1.0	ug/L
1,1,2-Trichloroethane	<1.0	ug/L
trans-1,3-Dichloropropene	<2.0	ug/L
Chlorodibromomethane	<2.0	ug/L
Bromoform	<2.0	ug/L
Tetrachloroethene	<2.0	ug/L
1,1,2,2-Tetrachloroethane	<2.0	ug/L
Toluene	<1.0	ug/L
Chlorobenzene	<1.0	ug/L
Ethylbenzene	<1.0	ug/L

Mark E. Meisty 11/29/93
Approval Signature

RMT LABORATORIES · 744 HEARTLAND TRAIL · MADISON, WI · 53717-1934 · P.O. BOX 8923 · MADISON, WI · 53708-8923 · 608/831-4444 · 608/831-7530 FAX

CLIENT: SKF ASHEVILLE
SAMPLE #: 3644-005
PROJECT #: 70144.08
WORK ORDER #: 3644
WI DNR LAB ID: 113138520

REPORT DATE: 12/13/93
COLLECTION DATE: 11/29/93
STATION ID: MW 16

VOLATILE ORGANIC ANALYSIS REPORT

PARAMETER	RESULT	UNITS
Chloromethane	<2.0	ug/L
Bromomethane	<2.0	ug/L
Vinyl chloride	<1.0	ug/L
Chloroethane	<2.0	ug/L
Methylene chloride	<1.0	ug/L
Fluorotrichloromethane	<2.0	ug/L
1,1-Dichloroethene	<1.0	ug/L
1,1-Dichloroethane	<1.0	ug/L
1,2-Dichloroethene, total	<2.0	ug/L
Chloroform	<1.0	ug/L
1,2-Dichloroethane	<1.0	ug/L
1,1,1-Trichloroethane	<2.0	ug/L
Carbon tetrachloride	<1.0	ug/L
Bromodichloromethane	<1.0	ug/L
1,2-Dichloropropane	<1.0	ug/L
cis-1,3-Dichloropropene	<2.0	ug/L
Trichloroethene	<2.0	ug/L
Benzene	<1.0	ug/L
1,1,2-Trichloroethane	<1.0	ug/L
trans-1,3-Dichloropropene	<2.0	ug/L
Chlorodibromomethane	<2.0	ug/L
Bromoform	<2.0	ug/L
Tetrachloroethene	<2.0	ug/L
1,1,2,2-Tetrachloroethane	<2.0	ug/L
Toluene	<1.0	ug/L
Chlorobenzene	<1.0	ug/L
Ethylbenzene	<1.0	ug/L

Mark A. Maitz 12/14/93
Approval Signature

RMT LABORATORIES · 744 HEARTLAND TRAIL · MADISON, WI · 53717-1934 · P.O. BOX 8923 · MADISON, WI · 53708-8923 · 608/831-4444 · 608/831-7530 FAX

CLIENT: SKF ASHEVILLE
SAMPLE #: 3644-006
PROJECT #: 70144.08
WORK ORDER #: 3644
WI DNR LAB ID: 113138520

REPORT DATE: 12/13/93
COLLECTION DATE: 11/29/93
STATION ID: MW 16A

VOLATILE ORGANIC ANALYSIS REPORT

PARAMETER	RESULT	UNITS
Chloromethane	<2.0	ug/L
Bromomethane	<2.0	ug/L
Vinyl chloride	<1.0	ug/L
Chloroethane	<2.0	ug/L
Methylene chloride	<1.0	ug/L
Fluorotrichloromethane	<2.0	ug/L
1,1-Dichloroethene	<1.0	ug/L
1,1-Dichloroethane	<1.0	ug/L
1,2-Dichloroethene, total	<2.0	ug/L
Chloroform	<1.0	ug/L
1,2-Dichloroethane	<1.0	ug/L
1,1,1-Trichloroethane	<2.0	ug/L
Carbon tetrachloride	<1.0	ug/L
Bromodichloromethane	<1.0	ug/L
1,2-Dichloropropane	<1.0	ug/L
cis-1,3-Dichloropropene	<2.0	ug/L
Trichloroethene	<2.0	ug/L
Benzene	<1.0	ug/L
1,1,2-Trichloroethane	<1.0	ug/L
trans-1,3-Dichloropropene	<2.0	ug/L
Chlorodibromomethane	<2.0	ug/L
Bromoform	<2.0	ug/L
Tetrachloroethene	<2.0	ug/L
1,1,2,2-Tetrachloroethane	<2.0	ug/L
Toluene	<1.0	ug/L
Chlorobenzene	<1.0	ug/L
Ethylbenzene	<1.0	ug/L

Mark A. Meentz 12/14/93
Approval Signature

RMT LABORATORIES · 744 HEARTLAND TRAIL · MADISON, WI · 53717-1934 · P.O. BOX 8923 · MADISON, WI · 53708-8923 · 608/831-4444 · 608/831-7530 FAX

CLIENT: SKF ASHEVILLE
SAMPLE #: 3644-008
PROJECT #: 70144.08
WORK ORDER #: 3644
WI DNR LAB ID: 113138520

REPORT DATE: 12/13/93
COLLECTION DATE: 11/30/93
STATION ID: MW 17

VOLATILE ORGANIC ANALYSIS REPORT

PARAMETER	RESULT	UNITS
Chloromethane	<2.0	ug/L
Bromomethane	<2.0	ug/L
Vinyl chloride	<1.0	ug/L
Chloroethane	<2.0	ug/L
Methylene chloride	<1.0	ug/L
Fluorotrichloromethane	<2.0	ug/L
1,1-Dichloroethene	<1.0	ug/L
1,1-Dichloroethane	<1.0	ug/L
1,2-Dichloroethene, total	<2.0	ug/L
Chloroform	<1.0	ug/L
1,2-Dichloroethane	<1.0	ug/L
1,1,1-Trichloroethane	<2.0	ug/L
Carbon tetrachloride	<1.0	ug/L
Bromodichloromethane	<1.0	ug/L
1,2-Dichloropropane	<1.0	ug/L
cis-1,3-Dichloropropene	<2.0	ug/L
Trichloroethene	7.5	ug/L
Benzene	<1.0	ug/L
1,1,2-Trichloroethane	<1.0	ug/L
trans-1,3-Dichloropropene	<2.0	ug/L
Chlorodibromomethane	<2.0	ug/L
Bromoform	<2.0	ug/L
Tetrachloroethene	<2.0	ug/L
1,1,2,2-Tetrachloroethane	<2.0	ug/L
Toluene	<1.0	ug/L
Chlorobenzene	<1.0	ug/L
Ethylbenzene	<1.0	ug/L

Mark L. Meintz 12/14/93
Approval Signature

RMT LABORATORIES · 744 HEARTLAND TRAIL · MADISON, WI · 53717-1934 · P.O. BOX 8923 · MADISON, WI · 53708-8923 · 608/831-4444 · 608/831-7530 FAX

CLIENT: SKF-ASHEVILLE
SAMPLE #: 3577-005
PROJECT #: 70144.01
WORK ORDER #: 3577
WI DNR LAB ID: 113138520

REPORT DATE: 11/24/93
COLLECTION DATE: 11/12/93
STATION ID: SUPPLY WELL
girmes UNUSED PRODUCTION WELL

VOLATILE ORGANIC ANALYSIS REPORT

PARAMETER	RESULT	UNITS
Chloromethane	<2.0	ug/L
Bromomethane	<2.0	ug/L
Vinyl chloride	<1.0	ug/L
Chloroethane	<2.0	ug/L
Methylene chloride	<1.0	ug/L
Fluorotrichloromethane	<2.0	ug/L
1,1-Dichloroethene	<1.0	ug/L
1,1-Dichloroethane	<1.0	ug/L
1,2-Dichloroethene, total	<2.0	ug/L
Chloroform	<1.0	ug/L
1,2-Dichloroethane	<1.0	ug/L
1,1,1-Trichloroethane	<2.0	ug/L
Carbon tetrachloride	<1.0	ug/L
Bromodichloromethane	<1.0	ug/L
1,2-Dichloropropane	<1.0	ug/L
cis-1,3-Dichloropropene	<2.0	ug/L
Trichloroethene	<2.0	ug/L
Benzene	<1.0	ug/L
1,1,2-Trichloroethane	<1.0	ug/L
trans-1,3-Dichloropropene	<2.0	ug/L
Chlorodibromomethane	<2.0	ug/L
Bromoform	<2.0	ug/L
Tetrachloroethene	<2.0	ug/L
1,1,2,2-Tetrachloroethane	<2.0	ug/L
Toluene	<1.0	ug/L
Chlorobenzene	<1.0	ug/L
Ethylbenzene	<1.0	ug/L

Mark H. Meintz 11/29/93
Approval Signature

RMT LABORATORIES · 744 HEARTLAND TRAIL · MADISON, WI · 53717-1934 · P.O. BOX 8923 · MADISON, WI · 53708-8923 · 608/831-4444 · 608/831-7530 FAX

CLIENT: SKF ASHEVILLE
SAMPLE #: 3644-017
PROJECT #: 70144.08
WORK ORDER #: 3644
WI DNR LAB ID: 113138520

REPORT DATE: 12/13/93
COLLECTION DATE:
STATION ID: DUP

VOLATILE ORGANIC ANALYSIS REPORT

PARAMETER	RESULT	UNITS
Chloromethane	<2.0	ug/L
Bromomethane	<2.0	ug/L
Vinyl chloride	<1.0	ug/L
Chloroethane	<2.0	ug/L
Methylene chloride	<1.0	ug/L
Fluorotrichloromethane	<2.0	ug/L
1,1-Dichloroethene	<1.0	ug/L
1,1-Dichloroethane	<1.0	ug/L
1,2-Dichloroethene, total	<2.0	ug/L
Chloroform	<1.0	ug/L
1,2-Dichloroethane	<1.0	ug/L
1,1,1-Trichloroethane	<2.0	ug/L
Carbon tetrachloride	<1.0	ug/L
Bromodichloromethane	<1.0	ug/L
1,2-Dichloropropane	<1.0	ug/L
cis-1,3-Dichloropropene	<2.0	ug/L
Trichloroethene	7.6	ug/L
Benzene	<1.0	ug/L
1,1,2-Trichloroethane	<1.0	ug/L
trans-1,3-Dichloropropene	<2.0	ug/L
Chlorodibromomethane	<2.0	ug/L
Bromoform	<2.0	ug/L
Tetrachloroethene	<2.0	ug/L
1,1,2,2-Tetrachloroethane	<2.0	ug/L
Toluene	<1.0	ug/L
Chlorobenzene	<1.0	ug/L
Ethylbenzene	<1.0	ug/L

Mark H. Meint 12/16/93
Approval Signature

RMT LABORATORIES · 744 HEARTLAND TRAIL · MADISON, WI · 53717-1934 · P.O. BOX 8923 · MADISON, WI · 53708-8923 · 608/831-4444 · 608/831-7530 FAX

CLIENT: SKF ASHEVILLE
SAMPLE #: 3644-001
PROJECT #: 70144.08
WORK ORDER #: 3644
WI DNR LAB ID: 113138520

REPORT DATE: 12/13/93
COLLECTION DATE:
STATION ID: TBLK

VOLATILE ORGANIC ANALYSIS REPORT

PARAMETER	RESULT	UNITS
Chloromethane	<2.0	ug/L
Bromomethane	<2.0	ug/L
Vinyl chloride	<1.0	ug/L
Chloroethane	<2.0	ug/L
Methylene chloride	<1.0	ug/L
Fluorotrichloromethane	<2.0	ug/L
1,1-Dichloroethene	<1.0	ug/L
1,1-Dichloroethane	<1.0	ug/L
1,2-Dichloroethene, total	<2.0	ug/L
Chloroform	<1.0	ug/L
1,2-Dichloroethane	<1.0	ug/L
1,1,1-Trichloroethane	<2.0	ug/L
Carbon tetrachloride	<1.0	ug/L
Bromodichloromethane	<1.0	ug/L
1,2-Dichloropropane	<1.0	ug/L
cis-1,3-Dichloropropene	<2.0	ug/L
Trichloroethene	<2.0	ug/L
Benzene	<1.0	ug/L
1,1,2-Trichloroethane	<1.0	ug/L
trans-1,3-Dichloropropene	<2.0	ug/L
Chlorodibromomethane	<2.0	ug/L
Bromoform	<2.0	ug/L
Tetrachloroethene	<2.0	ug/L
1,1,2,2-Tetrachloroethane	<2.0	ug/L
Toluene	<1.0	ug/L
Chlorobenzene	<1.0	ug/L
Ethylbenzene	<1.0	ug/L

Mark A. Meinz 12/16/93
Approval Signature

RMT LABORATORIES · 744 HEARTLAND TRAIL · MADISON, WI · 53717-1934 · P.O. BOX 8923 · MADISON, WI · 53708-8923 · 608/831-4444 · 608/831-7530 FAX

CLIENT: SKF ASHEVILLE
SAMPLE #: 3644-003
PROJECT #: 70144.08
WORK ORDER #: 3644
WI DNR LAB ID: 113138520

REPORT DATE: 12/14/93
COLLECTION DATE: 11/29/93
STATION ID: RBLK 01

VOLATILE ORGANIC ANALYSIS REPORT

PARAMETER	RESULT	UNITS
Chloromethane	<2.0	ug/L
Bromomethane	<2.0	ug/L
Vinyl chloride	<1.0	ug/L
Chloroethane	<2.0	ug/L
Methylene chloride	<1.0	ug/L
Fluorotrichloromethane	<2.0	ug/L
1,1-Dichloroethene	<1.0	ug/L
1,1-Dichloroethane	<1.0	ug/L
1,2-Dichloroethene, total	<2.0	ug/L
Chloroform	<1.0	ug/L
1,2-Dichloroethane	<1.0	ug/L
1,1,1-Trichloroethane	<2.0	ug/L
Carbon tetrachloride	<1.0	ug/L
Bromodichloromethane	<1.0	ug/L
1,2-Dichloropropane	<1.0	ug/L
cis-1,3-Dichloropropene	<2.0	ug/L
Trichloroethene	<2.0	ug/L
Benzene	<1.0	ug/L
1,1,2-Trichloroethane	<1.0	ug/L
trans-1,3-Dichloropropene	<2.0	ug/L
Chlorodibromomethane	<2.0	ug/L
Bromoform	<2.0	ug/L
Tetrachloroethene	<2.0	ug/L
1,1,2,2-Tetrachloroethane	<2.0	ug/L
Toluene	<1.0	ug/L
Chlorobenzene	<1.0	ug/L
Ethylbenzene	<1.0	ug/L

Mark H. Moritz 12/16/93
Approval Signature

RMT LABORATORIES · 744 HEARTLAND TRAIL · MADISON, WI · 53717-1934 · P.O. BOX 8923 · MADISON, WI · 53708-8923 · 608/831-4444 · 608/831-7530 FAX

CLIENT: SKF-ASHEVILLE
PROJECT #: 70144.01
SAMPLE #: 3577-006
STATION ID: MW 5
METHOD: 8081
WI DNR LAB ID: 113138520

REPORT DATE: 11/23/93
COLLECTION DATE: 11/12/93
EXTRACTION DATE: 11/16/93
ANALYSIS DATE: 11/17/93
DILUTION FACTOR: 1
UNITS: ug/L

SEMIVOLATILE ORGANICS ANALYSIS REPORT

COMPOUND	RESULT	EQL	CODE
Aroclor-1016		1.1	ND
Aroclor-1221		2.1	ND
Aroclor-1232		1.1	ND
Aroclor-1242		1.1	ND
Aroclor-1248		1.1	ND
Aroclor-1254		1.1	ND
Aroclor-1260		1.1	ND

ND = Not detected at or above the EQL

Cheryl L. Spaulding 11-23-93
Approval Signature

RMT LABORATORIES · 744 HEARTLAND TRAIL · MADISON, WI · 53717-1934 · P.O. BOX 8923 · MADISON, WI · 53708-8923 · 608/831-4444 · 608/831-7530 FAX

CLIENT: SKF-ASHEVILLE
PROJECT #: 70144.01
SAMPLE #: 3557-012
STATION ID: MW 7
METHOD: 8081
WI DNR LAB ID: 113138520

REPORT DATE: 11/23/93
COLLECTION DATE: 11/10/93
EXTRACTION DATE: 11/15/93
ANALYSIS DATE: 11/17/93
DILUTION FACTOR: 1
UNITS: ug/L

SEMIVOLATILE ORGANICS ANALYSIS REPORT

COMPOUND	RESULT	EQL	CODE
Aroclor-1016		1.0	ND
Aroclor-1221		2.0	ND
Aroclor-1232		1.0	ND
Aroclor-1242		1.0	ND
Aroclor-1248		1.0	ND
Aroclor-1254		1.0	ND
Aroclor-1260		1.0	ND

ND = Not detected at or above the EQL

Cheryl L. Spaulding 11-23-93
Approval Signature

RMT LABORATORIES · 744 HEARTLAND TRAIL · MADISON, WI · 53717-1934 · P.O. BOX 8923 · MADISON, WI · 53708-8923 · 608/831-4444 · 608/831-7530 FAX

CLIENT: SKF-ASHEVILLE
PROJECT #: 70144.01
SAMPLE #: 3557-014
STATION ID: MW 9
METHOD: 8081
WI DNR LAB ID: 113138520

REPORT DATE: 11/22/93
COLLECTION DATE: 11/10/93
EXTRACTION DATE: 11/15/93
ANALYSIS DATE: 11/17/93
DILUTION FACTOR: 1
UNITS: ug/L

SEMIVOLATILE ORGANICS ANALYSIS REPORT

COMPOUND	RESULT	EQL	CODE
Aroclor-1016		1.0	ND
Aroclor-1221		2.0	ND
Aroclor-1232		1.0	ND
Aroclor-1242		1.0	ND
Aroclor-1248		1.0	ND
Aroclor-1254		1.0	ND
Aroclor-1260		1.0	ND

ND = Not detected at or above the EQL

Cheryl L. Spaulding 11-23-93
Approval Signature

RMT LABORATORIES · 744 HEARTLAND TRAIL · MADISON, WI · 53717-1934 · P.O. BOX 8923 · MADISON, WI · 53708-8923 · 608/831-4444 · 608/831-7530 FAX

CLIENT: SKF-ASHEVILLE
PROJECT #: 70144.01
SAMPLE #: 3557-015
STATION ID: MW 10
METHOD: 8081
WI DNR LAB ID: 113138520

REPORT DATE: 11/22/93
COLLECTION DATE: 11/10/93
EXTRACTION DATE: 11/15/93
ANALYSIS DATE: 11/17/93
DILUTION FACTOR: 1
UNITS: ug/L

SEMIVOLATILE ORGANICS ANALYSIS REPORT

COMPOUND	RESULT	EQL	CODE
Aroclor-1016		1.0	ND
Aroclor-1221		2.0	ND
Aroclor-1232		1.0	ND
Aroclor-1242		1.0	ND
Aroclor-1248		1.0	ND
Aroclor-1254		1.0	ND
Aroclor-1260		1.0	ND

ND = Not detected at or above the EQL

Cheryl L. Spaulding 11-23-93
Approval Signature

RMT INC. LABORATORIES

Madison, WI 53717
744 Heartland Trail
Phone (608) 831-4444
FAX (608) 831-7530

Santa Monica, CA
Atlanta, GA
Baton Rouge, LA
Troy, MI

nd Ledge, MI
nville, TN

Greenville, SC
Schaumburg, IL

Dublin, OH
Waukesha, WI

F-268 (R2/92)
(Use Black Ink Only)

CHAIN OF CUSTODY RECORD

№ 044191

Bottles Prepared by: | Date/Time

Project No.: 70144.01

Client: SKF-ASHEVILLE

3577 RMT Lab NO.	Yr. 93 Date	Time	Sample Station ID	Total Number Of Containers	40 ml. Septa	1 Liter Amber	120 ml. Vial	1 Liter Nalgene				MATRIX DMF 11/15/93	Comments:
					N E	N A	N A	N A					
001	—	—	TBLK	3	3							Gw	
002	11/11	1300	MW 15A	5	3	2							
003		1630	MW 11	5	3	2							
004		1745	ROC 1	6		2	3	1				Soil	
005	11/12	1435	SUPPLY WELL	5	3	2						Gw	
006		1600	MW 5 DMF 11/15/93	4 ~~5~~	~~3~~ 2	2							
007		1725	MW 4	4 ~~5~~	~~3~~ 2	2							
008		1830	STORAGE TANK	4 ~~5~~	~~3~~ 2	2							
009			Lead BLK										TO BE MADE

Code: A - None
B - HNO3
C - H_2SO_4
D - NaOH
E - HCl
F - _____

Filtered (Yes/No)
Preserved (Code)

SAMPLER Relinquished by (Sig.)	Date/Time	Received by (Sig.)	Date/Time
① R. Bauer	11-12	② FED. EX. Shipper Name & # # 5471348875	
Relinquished by (Sig.) ③	Date/Time	Received by (Sig.) ④ Shipper Name & #	Date/Time
Relinquished by (Sig.) ⑤ Fedex	Date/Time 11/15/93 11:00 am	Received by (Sig.) ⑥ Debby Wakefield Shipper Name & #	Date/Time 11/15/93 11:00 am

HAZARDS ASSOCIATED WITH SAMPLES

(For Lab Use Only)
Receipt Temp: 5.0°C
Receipt pH: NA

Custody Seal NA Present/Absent | Seal Intact/Not Intact | Seal #'s

WHITE - LABORATORY COPY YELLOW - REPORT APPENDIX PINK - SAMPLER/SUBMITTER

RMT LABORATORIES

Madison, WI 53717
744 Heartland Trail
Phone (608) 831-4444
FAX (608) 831-7530

Santa Monica, CA
Atlanta, GA
Baton Rouge, LA
Troy, MI

Gr[illegible]edge, MI
Nashville, TN

Greenville, SC
Schaumburg, IL

Dublin, OH
Waukesha, WI

1/2

F-268 (R2/92)
(Use Black Ink Only)

CHAIN OF CUSTODY RECORD

№ 044193

Bottles Prepared by: File w/ 70144.08 SEE 12/3/93
Date/Time

Project No. 86-00020.96 ~~70144.08~~ PKG
Client: SKF - ASHEVILLE

3644

RMT Lab NO. | Yr. 93 Date | Time | Sample Station ID | Total Number Of Containers | Container Inventory: 40 ML SEPTA | N E | Filtered (Yes/No) / Preserved (Code) | MATRIX (GW) BTW 12/2/93 | Comments:

Code: A - None, B - HNO3, C - H_2SO_4, D - NaOH, E - HCl, F - ____

Lab NO.	Date	Time	Sample Station ID	Total Number Of Containers	40 ML SEPTA	N E	Filtered (Yes/No) / Preserved (Code)	MATRIX (GW) BTW 12/2/93	Comments:
001	—	—	TBLK	3	3				
002	11/29	1325	MW 12	3	3				
003		1350	TBLK 01	3	3				
004		1440	MW 13	3	3				
005		1535	MW 16	3	3				
006		1655	MW 16A	3	3				
007	11/30	0900	MW 15	3	3				
008		0950	MW 17	3	3				
009		1035	MW 1	3	3				
010		1110	MW 6	3	3				
011		1155	MW 2	3	3				
012		1245	MW 7	3	3				
013		1330	MW 8	3	3				

SAMPLER Relinquished by (Sig.)	Date/Time	Received by (Sig.)	Date/Time
① R. Bauler	12/1 1830	② FED. EX. Shipper Name & # # 5471348982	12/1/93 1830
Relinquished by (Sig.) ③	Date/Time	Received by (Sig.) ④ Shipper Name & #	Date/Time
Relinquished by (Sig.) ⑤ Fedex	Date/Time 12/2/93 10:45 am	Received by (Sig.) ⑥ Betsy Nabelfeld Shipper Name & #	Date/Time 12/2/93 10:45 am

HAZARDS ASSOCIATED WITH SAMPLES

(For Lab Use Only)
Receipt Temp 4.0 C
Receipt pH NA

Custody Seal NA Present/Absent Seal Intact/Not Intact Seal #'s

RMT LABORATORIES
744 Heartland Trail
Phone (608) 831-4444
FAX (608) 831-7530
Atlanta, GA
Baton Rouge, LA
Troy, MI
ville, TN
Schaumburg, IL
Waukesha, WI

F-268 (R2/92)
(Use Black Ink Only)

CHAIN OF CUSTODY RECORD

№ 036772

Bottles Prepared by: | Date/Time

Project No. 86-00020.96 ~~7D1441-08~~ | Client: SKF - ASHEVILLE

Filtered (Yes/No)
Preserved (Code)

Code: A - None, B - HNO3, C - H_2SO_4, D - NaOH, E - HCl, F - ____

RMT Lab NO.	Yr. 93 Date	Time	Sample Station ID	Total Number Of Containers	Container Inventory: 40 ML. SEPTUM	N	E							MATRIX: GW	Comments: BTN 12/2/93
014	11/30	1420	MW 9	3	3										
015		1505	MW 10	3	3										
016		1610	MW 14	3	3										
017			DUP	3	3										

SAMPLER Relinquished by (Sig.)	Date/Time	Received by (Sig.)	Date/Time
① R. Bowler	12-1 1830	② FED. EX. Shipper Name & # 5471348982	12/1/93 1830
Relinquished by (Sig.) ③	Date/Time	Received by (Sig.) ④ Shipper Name & #	Date/Time
Relinquished by (Sig.) ⑤ Fedex	Date/Time 12/2/93 10:45 am	Received by (Sig.) ⑥ Shipper Name & #	Date/Time 12/2/93 10:45 am

HAZARDS ASSOCIATED WITH SAMPLES

(For Lab Use Only)
Receipt Temp 4.0 C
Receipt pH NA

Custody Seal NA Present/Absent | Seal | Intact/Not Intact | Seal #'s

WHITE - LABORATORY COPY

RMT LABORATORIES · 744 HEARTLAND TRAIL · MADISON, WI 53717-1934 · P.O. BOX 8923 · MADISON, WI 53708-8923 · 608/831-4444 · 608/831-7530 FAX

CLIENT: SKF - ASHVILLE
SAMPLE #: 4251-001
PROJECT #: 70144.02
WORK ORDER #: 4251
WI DNR LAB ID: 113138520

REPORT DATE: 03/31/94
COLLECTION DATE: 03/24/94
STATION ID: MW-13

VOLATILE ORGANIC ANALYSIS REPORT

PARAMETER	RESULT	UNITS
1,2-Dichloroethene, total	5.6	ug/L
Trichloroethene	<2.0	ug/L
Vinyl chloride	27	ug/L

Mark A. Mentz 3/31/94
Approval Signature

RMT LABORATORIES 744 HEARTLAND TRAIL MADISON, WI 53717-1934 · P.O. BOX 8923 · MADISON, WI · 53708-8923 · 608/831-4444 · 608/831-7530 FAX

CLIENT: SKF - ASHVILLE
SAMPLE #: 4251-002
PROJECT #: 70144.02
WORK ORDER #: 4251
WI DNR LAB ID: 113138520

REPORT DATE: 03/31/94
COLLECTION DATE: 03/23/94
STATION ID: SW-1

VOLATILE ORGANIC ANALYSIS REPORT

PARAMETER	RESULT	UNITS
1,2-Dichloroethene, total	<2.0	ug/L
Trichloroethene	<2.0	ug/L
Vinyl chloride	<1.0	ug/L

Mark G. Miers 3/31/94
Approval Signature

RMT LABORATORIES · 744 HEARTLAND TRAIL · MADISON, WI · 53717-1934 · P.O. BOX 8923 · MADISON, WI · 53708-8923 · 608/831-4444 · 608/831-7530 FAX

CLIENT: SKF - ASHVILLE
SAMPLE #: 4251-003
PROJECT #: 70144.02
WORK ORDER #: 4251
WI DNR LAB ID: 113138520

REPORT DATE: 03/31/94
COLLECTION DATE: 03/23/94
STATION ID: SW-2

VOLATILE ORGANIC ANALYSIS REPORT

PARAMETER	RESULT	UNITS
1,2-Dichloroethene, total	<2.0	ug/L
Trichloroethene	<2.0	ug/L
Vinyl chloride	<1.0	ug/L

Mark A. Moritz 3/31/94
Approval Signature

RMT LABORATORIES 744 HEARTLAND TRAIL · MADISON, WI · 53717-1934 · P.O. BOX 8923 · MADISON, WI · 53708-8923 · 608/831-4444 · 608/831-7530 FAX

CLIENT: SKF - ASHVILLE
SAMPLE #: 4251-004
PROJECT #: 70144.02
WORK ORDER #: 4251
WI DNR LAB ID: 113138520

REPORT DATE: 03/31/94
COLLECTION DATE: 03/23/94
STATION ID: SW-3

VOLATILE ORGANIC ANALYSIS REPORT

PARAMETER	RESULT	UNITS
1,2-Dichloroethene, total	<2.0	ug/L
Trichloroethene	<2.0	ug/L
Vinyl chloride	<1.0	ug/L

Mark A. Meeth 3/31/94
Approval Signature

RMT LABORATORIES 744 HEARTLAND TRAIL MADISON, WI 53717-1934 P.O. BOX 8923 MADISON, WI 53708-8923 608/831-4444 608/831-7530 FAX

CLIENT: SKF - ASHVILLE
SAMPLE #: 4251-005
PROJECT #: 70144.02
WORK ORDER #: 4251
WI DNR LAB ID: 113138520

REPORT DATE: 03/31/94
COLLECTION DATE: 03/23/94
STATION ID: TBLK

VOLATILE ORGANIC ANALYSIS REPORT

PARAMETER	RESULT	UNITS
1,2-Dichloroethene, total	<2.0	ug/L
Trichloroethene	<2.0	ug/L
Vinyl chloride	<1.0	ug/L

Mark D. Moritz 3/31/94
Approval Signature

RMC INC. LABORATORIES

Madison, WI 53717
744 Heartland Trail
Phone (608) 831-4444
FAX (608) 831-7530

Fox Valley, WI
Columbus, OH
Milwaukee, WI

Nashville, TN
Greenville, SC

Augusta, GA
Lansing, MI

Chicago, IL
Los Angeles, CA

Cincinnati, OH
Madison, WI

F-268 (R2/92)
(Use Black Ink Only)

CHAIN OF CUSTODY RECORD

№ 047056

Bottles Prepared by: SDT

Date/Time: 3-23-94 8:00

Project No.: 70144.02

Client: SKF- Asheville

Lab No. 4251	Yr. 94 Date	Time	Sample Station ID	Total Number Of Containers	Container Inventory: 40 ml septa	N	E					MATRIX	Comments:
001	3-24	10:25	MW-13	3	3							GW	
002	3-23	12:10	SW-1	3	3							SW	
003	3-23	12:20	SW-2	3	3							SW	
004	3-23	11:15	SW-3	3	3							SW	
005	3-23	—	TBLK	3	3							GW	

Filtered (Yes/No)
Preserved (Code)

Code: A - None
B - HNO3
C - H_2SO4
D - NaOH
E - HCl
F - _____

SAMPLER Relinquished by (Sig.)	Date/Time	Received by (Sig.)	Date/Time
① Kenneth A Lauber	3-24-94 16:15	② Shipper Name & # 7054116904 Fed EX	3-24-94 18:00
Relinquished by (Sig.) ③	Date/Time	Received by (Sig.) ④ Shipper Name & #	Date/Time
Relinquished by (Sig.) ⑤ Fedex	Date/Time 3/25/93 10:45 am	Received by (Sig.) ⑥ Debby Wallefeldt Shipper Name & #	Date/Time 3/25/94 10:45 am

HAZARDS ASSOCIATED WITH SAMPLES

(For Lab Use Only)

Receipt Temp 3.0°C

Receipt pH N/A

Custody Seal Na Present/Absent

Seal Intact/Not Intact

Seal #'s

WHITE - LABORATORY COPY YELLOW - REPORT APPENDIX PINK - SAMPLER/SUBMITTER

RMT LABORATORIES · 744 HEARTLAND TRAIL · MADISON, WI · 53717-1934 · P.O. BOX 8923 · MADISON, WI · 53708-8923 · 608/831-4444 · 608/831-7530 FAX

SAMPLE NARRATIVE
VOLATILE GC ORGANIC ANALYSIS

PROJECT NAME: SKF-ASHEVILLE
PROJECT NUMBER: 70144.02
WORK ORDER NUMBER: 4489
DATE: 05/04/94

Chloroform was detected at level of 7.4 ug/L in the trip blank for this project, sample number 4489-001. Chloroform was detected in sample numbers 4489-002, 4489-004, and 4489-005 at levels of 2.2 ug/L, 13 ug/L and 1.6 ug/L respectively.

RMT LABORATORIES · 744 HEARTLAND TRAIL · MADISON, WI · 53717-1934 · P.O. BOX 8923 · MADISON, WI · 53708-8923 · 608/831-4444 · 608/831-7530 FAX

CLIENT: SKF - ASHEVILLE
SAMPLE #: 4489-005
PROJECT #: 70144.02
WORK ORDER #: 4489
WI DNR LAB ID: 113138520

REPORT DATE: 05/05/94
COLLECTION DATE: 04/20/94
STATION ID: MW-18

VOLATILE ORGANIC ANALYSIS REPORT

PARAMETER	RESULT	UNITS
Chloromethane	<1.0	ug/L
Bromomethane	<2.0	ug/L
Vinyl chloride	<1.0	ug/L
Chloroethane	<1.0	ug/L
Methylene chloride	<1.0	ug/L
Fluorotrichloromethane	<1.0	ug/L
1,1-Dichloroethene	<1.0	ug/L
1,1-Dichloroethane	<1.0	ug/L
1,2-Dichloroethene, total	8.3	ug/L
Chloroform	1.6	ug/L
1,2-Dichloroethane	<1.0	ug/L
1,1,1-Trichloroethane	<1.0	ug/L
Carbon tetrachloride	<1.0	ug/L
Bromodichloromethane	<1.0	ug/L
1,2-Dichloropropane	<1.0	ug/L
cis-1,3-Dichloropropene	<1.0	ug/L
Trichloroethene	3.3	ug/L
Benzene	<1.0	ug/L
1,1,2-Trichloroethane	<1.0	ug/L
trans-1,3-Dichloropropene	<1.0	ug/L
Chlorodibromomethane	<2.0	ug/L
Bromoform	<2.0	ug/L
Tetrachloroethene	<2.0	ug/L
1,1,2,2-Tetrachloroethane	<2.0	ug/L
Toluene	<1.0	ug/L
Chlorobenzene	<1.0	ug/L
Ethylbenzene	<1.0	ug/L

Mark J. Micuit 5/6/94
Approval Signature

RMT LABORATORIES 744 HEARTLAND TRAIL · MADISON, WI · 53717-1934 · P.O. BOX 8923 · MADISON, WI · 53708-8923 · 608/831-4444 · 608/831-7530 FAX

CLIENT: SKF - ASHEVILLE
SAMPLE #: 4489-006
PROJECT #: 70144.02
WORK ORDER #: 4489
WI DNR LAB ID: 113138520

REPORT DATE: 05/05/94
COLLECTION DATE: 04/20/94
STATION ID: MW-19

VOLATILE ORGANIC ANALYSIS REPORT

PARAMETER	RESULT	UNITS
Chloromethane	<1.0	ug/L
Bromomethane	<2.0	ug/L
Vinyl chloride	<1.0	ug/L
Chloroethane	<1.0	ug/L
Methylene chloride	<1.0	ug/L
Fluorotrichloromethane	<1.0	ug/L
1,1-Dichloroethene	<1.0	ug/L
1,1-Dichloroethane	<1.0	ug/L
1,2-Dichloroethene, total	<2.0	ug/L
Chloroform	<1.0	ug/L
1,2-Dichloroethane	<1.0	ug/L
1,1,1-Trichloroethane	<1.0	ug/L
Carbon tetrachloride	<1.0	ug/L
Bromodichloromethane	<1.0	ug/L
1,2-Dichloropropane	<1.0	ug/L
cis-1,3-Dichloropropene	<1.0	ug/L
Trichloroethene	3.7	ug/L
Benzene	<1.0	ug/L
1,1,2-Trichloroethane	<1.0	ug/L
trans-1,3-Dichloropropene	<1.0	ug/L
Chlorodibromomethane	<2.0	ug/L
Bromoform	<2.0	ug/L
Tetrachloroethene	<2.0	ug/L
1,1,2,2-Tetrachloroethane	<2.0	ug/L
Toluene	<1.0	ug/L
Chlorobenzene	<1.0	ug/L
Ethylbenzene	<1.0	ug/L

Mark H. Meiritz 5/6/94
Approval Signature

RMT LABORATORIES · 744 HEARTLAND TRAIL · MADISON, WI · 53717-1934 · P.O. BOX 8923 · MADISON, WI · 53708-8923 · 608/831-4444 · 608/831-7530 FAX

CLIENT: SKF - ASHEVILLE
SAMPLE #: 4489-004
PROJECT #: 70144.02
WORK ORDER #: 4489
WI DNR LAB ID: 113138520

REPORT DATE: 05/05/94
COLLECTION DATE: 04/20/94
STATION ID: MW-20

VOLATILE ORGANIC ANALYSIS REPORT

PARAMETER	RESULT	UNITS
Chloromethane	<1.0	ug/L
Bromomethane	<2.0	ug/L
Vinyl chloride	<1.0	ug/L
Chloroethane	<1.0	ug/L
Methylene chloride	<1.0	ug/L
Fluorotrichloromethane	<1.0	ug/L
1,1-Dichloroethene	<1.0	ug/L
1,1-Dichloroethane	<1.0	ug/L
1,2-Dichloroethene, total	<2.0	ug/L
Chloroform	13	ug/L
1,2-Dichloroethane	<1.0	ug/L
1,1,1-Trichloroethane	<1.0	ug/L
Carbon tetrachloride	<1.0	ug/L
Bromodichloromethane	<1.0	ug/L
1,2-Dichloropropane	<1.0	ug/L
cis-1,3-Dichloropropene	<1.0	ug/L
Trichloroethene	<1.0	ug/L
Benzene	<1.0	ug/L
1,1,2-Trichloroethane	<1.0	ug/L
trans-1,3-Dichloropropene	<1.0	ug/L
Chlorodibromomethane	<2.0	ug/L
Bromoform	<2.0	ug/L
Tetrachloroethene	<2.0	ug/L
1,1,2,2-Tetrachloroethane	<2.0	ug/L
Toluene	<1.0	ug/L
Chlorobenzene	<1.0	ug/L
Ethylbenzene	<1.0	ug/L

Mark H. Mauch 5/6/94
Approval Signature

RMT LABORATORIES · 744 HEARTLAND TRAIL · MADISON, WI · 53717-1934 · P.O. BOX 8923 · MADISON, WI · 53708-8923 · 608/831-4444 · 608/831-7530 FAX

CLIENT: SKF - ASHEVILLE
SAMPLE #: 4489-003
PROJECT #: 70144.02
WORK ORDER #: 4489
WI DNR LAB ID: 113138520

REPORT DATE: 05/05/94
COLLECTION DATE: 04/20/94
STATION ID: MW-21

VOLATILE ORGANIC ANALYSIS REPORT

PARAMETER	RESULT	UNITS
Chloromethane	<20	ug/L
Bromomethane	<40	ug/L
Vinyl chloride	<20	ug/L
Chloroethane	<20	ug/L
Methylene chloride	<20	ug/L
Fluorotrichloromethane	<20	ug/L
1,1-Dichloroethene	<20	ug/L
1,1-Dichloroethane	<20	ug/L
1,2-Dichloroethene, total	130	ug/L
Chloroform	<20	ug/L
1,2-Dichloroethane	<20	ug/L
1,1,1-Trichloroethane	<20	ug/L
Carbon tetrachloride	<20	ug/L
Bromodichloromethane	<20	ug/L
1,2-Dichloropropane	<20	ug/L
cis-1,3-Dichloropropene	<20	ug/L
Trichloroethene	490	ug/L
Benzene	<20	ug/L
1,1,2-Trichloroethane	<20	ug/L
trans-1,3-Dichloropropene	<20	ug/L
Chlorodibromomethane	<40	ug/L
Bromoform	<40	ug/L
Tetrachloroethene	<40	ug/L
1,1,2,2-Tetrachloroethane	<40	ug/L
Toluene	<20	ug/L
Chlorobenzene	<20	ug/L
Ethylbenzene	<20	ug/L

Mark A. Mieuli 5/6/94
Approval Signature

RMT LABORATORIES · 744 HEARTLAND TRAIL · MADISON, WI · 53717-1934 · P.O. BOX 8923 · MADISON, WI · 53708-8923 · 608/831-4444 · 608/831-7530 FAX

CLIENT: SKF - ASHEVILLE
SAMPLE #: 4489-002
PROJECT #: 70144.02
WORK ORDER #: 4489
WI DNR LAB ID: 113138520

REPORT DATE: 05/05/94
COLLECTION DATE: 04/20/94
STATION ID: MW-22

VOLATILE ORGANIC ANALYSIS REPORT

PARAMETER	RESULT	UNITS
Chloromethane	<1.0	ug/L
Bromomethane	<2.0	ug/L
Vinyl chloride	<1.0	ug/L
Chloroethane	<1.0	ug/L
Methylene chloride	<1.0	ug/L
Fluorotrichloromethane	<1.0	ug/L
1,1-Dichloroethene	<1.0	ug/L
1,1-Dichloroethane	<1.0	ug/L
1,2-Dichloroethene, total	<2.0	ug/L
Chloroform	2.2	ug/L
1,2-Dichloroethane	<1.0	ug/L
1,1,1-Trichloroethane	<1.0	ug/L
Carbon tetrachloride	<1.0	ug/L
Bromodichloromethane	<1.0	ug/L
1,2-Dichloropropane	<1.0	ug/L
cis-1,3-Dichloropropene	<1.0	ug/L
Trichloroethene	<1.0	ug/L
Benzene	<1.0	ug/L
1,1,2-Trichloroethane	<1.0	ug/L
trans-1,3-Dichloropropene	<1.0	ug/L
Chlorodibromomethane	<2.0	ug/L
Bromoform	<2.0	ug/L
Tetrachloroethene	<2.0	ug/L
1,1,2,2-Tetrachloroethane	<2.0	ug/L
Toluene	<1.0	ug/L
Chlorobenzene	<1.0	ug/L
Ethylbenzene	<1.0	ug/L

Mark D. Moritz 5/6/94
Approval Signature

RMT LABORATORIES · 744 HEARTLAND TRAIL · MADISON, WI 53717-1934 · P.O. BOX 8923 · MADISON, WI · 53708-8923 · 608/831-4444 · 608/831-7530 FAX

CLIENT: SKF - ASHEVILLE
SAMPLE #: 4489-001
PROJECT #: 70144.02
WORK ORDER #: 4489
WI DNR LAB ID: 113138520

REPORT DATE: 05/05/94
COLLECTION DATE: 04/18/94
STATION ID: TBLK

VOLATILE ORGANIC ANALYSIS REPORT

PARAMETER	RESULT	UNITS
Chloromethane	<1.0	ug/L
Bromomethane	<2.0	ug/L
Vinyl chloride	<1.0	ug/L
Chloroethane	<1.0	ug/L
Methylene chloride	<1.0	ug/L
Fluorotrichloromethane	<1.0	ug/L
1,1-Dichloroethene	<1.0	ug/L
1,1-Dichloroethane	<1.0	ug/L
1,2-Dichloroethene, total	<2.0	ug/L
Chloroform	7.4	ug/L
1,2-Dichloroethane	<1.0	ug/L
1,1,1-Trichloroethane	<1.0	ug/L
Carbon tetrachloride	<1.0	ug/L
Bromodichloromethane	<1.0	ug/L
1,2-Dichloropropane	<1.0	ug/L
cis-1,3-Dichloropropene	<1.0	ug/L
Trichloroethene	<1.0	ug/L
Benzene	<1.0	ug/L
1,1,2-Trichloroethane	<1.0	ug/L
trans-1,3-Dichloropropene	<1.0	ug/L
Chlorodibromomethane	<2.0	ug/L
Bromoform	<2.0	ug/L
Tetrachloroethene	<2.0	ug/L
1,1,2,2-Tetrachloroethane	<2.0	ug/L
Toluene	<1.0	ug/L
Chlorobenzene	<1.0	ug/L
Ethylbenzene	<1.0	ug/L

Mark D. Meirtz 5/6/94
Approval Signature

RMC INC.
LABORATORIES
Madison, WI 53717
744 Heartland Trail
Phone (608) 831-4444
FAX (608) 831-7530
Fox Valley, WI
Columbus, OH
Milwaukee, WI
...shville, TN
...enville, SC
Augusta, GA
Lansing, MI
Chicago, IL
Los Angeles, CA
...incinnati, OH
...dison, WI

F-268 (R2/92)
(Use Black Ink Only)

CHAIN OF CUSTODY RECORD

№ 047147

Bottles Prepared by:	Date/Time
WEM	4-18-94

Project No.	Client:
70144.02	SKF Ashville

Code: A - None, B - HNO3, C - H_2SO_4, D - NaOH, E - HCl, F - _____

Lab No.	Yr. 94 Date	Time	Sample Station ID	Total Number Of Containers	Container Inventory: 40ml Septa Vial	N	E					MATRIX: GW AF 4/23/94	Comments:
						Filtered (Yes/No)	Preserved (Code)						
4489													
001	4-18	—	TBLK	3	3							GW	
002	4-20	1000	mw-22	3	3								
003	4-20	1115	mw-21	3	3								
004	4-20	1230	mw-20	3	3								
005	4-20	1400	mw-18	3	3								
006	4-20	1530	mw-19	3	3								

SAMPLER Relinquished by (Sig.)	Date/Time	Received by (Sig.)	Date/Time
① Bill Modli	4-22-94 1800	② Fed Ex Shipper Name & # 7054116930	
Relinquished by (Sig.) ③ FedX	4/23/94 1045	Received by (Sig.) ④ Shipper Name & #	
Relinquished by (Sig.) ⑤		Received by (Sig.) ⑥ Doug Fong Shipper Name & #	4/23/94 1045

HAZARDS ASSOCIATED WITH SAMPLES

(For Lab Use Only)
Receipt Temp: 3°C
Receipt pH: N/A

Custody Seal: Present/Absent Seal: Intact/Not Intact Seal #'s

WHITE - LABORATORY COPY YELLOW - REPORT APPENDIX PINK - SAMPLER SUBMITTER

RMT LABORATORIES · 744 HEARTLAND TRAIL · MADISON, WI · 53717-1934 · P.O. BOX 8923 · MADISON, WI · 53708-8923 · 608/831-4444 · 608/831-7530 FAX

CLIENT: SKF - ASHEVILLE
PROJECT #: 70144.02
SAMPLE #: 4461-001
STATION ID: SW-4
METHOD: 8260
WI DNR LAB ID: 113138520

REPORT DATE: 05/02/94
COLLECTION DATE: 04/18/94
EXTRACTION DATE: --------
ANALYSIS DATE: 04/27/94
DILUTION FACTOR: 1.0
UNITS: ug/L

VOLATILE ORGANICS ANALYSIS REPORT

COMPOUND	RESULT	EQL	CODE
1,2-Dichloroethene, total		10	U
Trichloroethene	0.9	10	Q
Tetrachloroethene		10	U
Vinyl chloride		10	U

Mark A. Meath 5/2/94

Approval Signature

RMT LABORATORIES 744 HEARTLAND TRAIL · MADISON, WI · 53717-1934 · P.O. BOX 8923 · MADISON, WI · 53708-8923 · 608/831-4444 · 608/831-7530 FAX

CLIENT: SKF - ASHEVILLE
PROJECT #: 70144.02
SAMPLE #: 4461-002
STATION ID: SW-5
METHOD: 8260
WI DNR LAB ID: 113138520

REPORT DATE: 05/02/94
COLLECTION DATE: 04/14/94
EXTRACTION DATE: --------
ANALYSIS DATE: 04/27/94
DILUTION FACTOR: 1.0
UNITS: ug/L

VOLATILE ORGANICS ANALYSIS REPORT

COMPOUND	RESULT	EQL	CODE
1,2-Dichloroethene, total	4	10	Q
Trichloroethene	72	10	
Tetrachloroethene		10	U
Vinyl chloride		10	U

Mark A. Mrosity 5/2/94

Approval Signature

RMT LABORATORIES · 744 HEARTLAND TRAIL · MADISON, WI · 53717-1934 · P.O. BOX 8923 · MADISON, WI · 53708-8923 · 608/831-4444 · 608/831-7530 FAX

CLIENT: SKF - ASHEVILLE
PROJECT #: 70144.02
SAMPLE #: 4461-003
STATION ID: SW-6
METHOD: 8260
WI DNR LAB ID: 113138520

REPORT DATE: 05/02/94
COLLECTION DATE: 04/14/94
EXTRACTION DATE: --------
ANALYSIS DATE: 04/27/94
DILUTION FACTOR: 1.0
UNITS: ug/L

VOLATILE ORGANICS ANALYSIS REPORT

COMPOUND	RESULT	EQL	CODE
1,2-Dichloroethene, total		10	U
Trichloroethene	0.3	10	Q
Tetrachloroethene		10	U
Vinyl chloride		10	U

Mark A. Mauty 5/2/94

Approval Signature

RMT LABORATORIES 744 HEARTLAND TRAIL · MADISON, WI · 53717-1934 · P.O. BOX 8923 · MADISON, WI · 53708-8923 · 608/831-4444 · 608/831-7530 FAX

CLIENT: SKF - ASHEVILLE
PROJECT #: 70144.02
SAMPLE #: 4461-004
STATION ID: TRIP BLANK
METHOD: 8260
WI DNR LAB ID: 113138520

REPORT DATE: 05/02/94
COLLECTION DATE:
EXTRACTION DATE: --------
ANALYSIS DATE: 04/27/94
DILUTION FACTOR: 1.0
UNITS: ug/L

VOLATILE ORGANICS ANALYSIS REPORT

COMPOUND	RESULT	EQL	CODE
1,2-Dichloroethene, total		10	U
Trichloroethene		10	U
Tetrachloroethene		10	U
Vinyl chloride		10	U

Mark G. Mauty

Approval Signature

RMT LABORATORIES - 744 HEARTLAND TRAIL - MADISON, WI - 53717-1934 - P.O. BOX 8923 - MADISON, WI - 53708-8923 - 608/831-4444 - 608/831-7530 FAX

CLIENT: SKF - ASHEVILLE
SAMPLE #: 5355-009
PROJECT #: 70144.02
WORK ORDER #: 5355
WI DNR LAB ID: 113138520

REPORT DATE: 09/02/94
COLLECTION DATE: 08/18/94
STATION ID: MW-18

VOLATILE ORGANICS ANALYSIS REPORT

COMPOUND	RESULT	UNITS
1,2-Dichloroethene, total	3.6	ug/L
Trichloroethene	1.7	ug/L
Vinyl chloride	<1.0	ug/L

Kevin P. Meek 9-6-94
Approval Signature

RMT LABORATORIES - 744 HEARTLAND TRAIL - MADISON, WI - 53717-1934 - P.O. BOX 8923 - MADISON, WI - 53708-8923 - 608/831-4444 - 608/831-7530 FAX

CLIENT: SKF - ASHEVILLE
SAMPLE #: 5355-011
PROJECT #: 70144.02
WORK ORDER #: 5355
WI DNR LAB ID: 113138520

REPORT DATE: 09/02/94
COLLECTION DATE: 08/19/94
STATION ID: MW-19

VOLATILE ORGANICS ANALYSIS REPORT

COMPOUND	RESULT	UNITS
1,2-Dichloroethene, total	<20	ug/L
Trichloroethene	180	ug/L
Vinyl chloride	<10	ug/L

Kevin P. Mark 9-6-94
Approval Signature

RMT LABORATORIES · 744 HEARTLAND TRAIL · MADISON, WI · 53717-1934 · P.O. BOX 8923 · MADISON, WI · 53708-8923 · 608/831-4444 · 608/831-7530 FAX

CLIENT: SKF - ASHEVILLE
SAMPLE #: 5355-007
PROJECT #: 70144.02
WORK ORDER #: 5355
WI DNR LAB ID: 113138520

REPORT DATE: 09/02/94
COLLECTION DATE: 08/18/94
STATION ID: MW-21

VOLATILE ORGANICS ANALYSIS REPORT

COMPOUND	RESULT	UNITS
1,2-Dichloroethene, total	140	ug/L
Trichloroethene	490	ug/L
Vinyl chloride	<20	ug/L

Kevin P. Mack 9-6-94
Approval Signature

RMT LABORATORIES - 744 HEARTLAND TRAIL - MADISON, WI - 53717-1934 - P.O. BOX 8923 - MADISON, WI - 53708-8923 - 608/831-4444 - 608/831-7530 FAX

CLIENT: SKF - ASHEVILLE
SAMPLE #: 5355-003
PROJECT #: 70144.02
WORK ORDER #: 5355
WI DNR LAB ID: 113138520

REPORT DATE: 09/02/94
COLLECTION DATE: 08/18/94
STATION ID: MW-23

VOLATILE ORGANICS ANALYSIS REPORT

COMPOUND	RESULT	UNITS
1,2-Dichloroethene, total	<200	ug/L
Trichloroethene	3500	ug/L
Vinyl chloride	<100	ug/L

Kevin P. Meek 9-6-94
Approval Signature

RMT LABORATORIES · 744 HEARTLAND TRAIL · MADISON, WI · 53717-1934 · P.O. BOX 8923 · MADISON, WI · 53708-8923 · 608/831-4444 · 608/831-7530 FAX

CLIENT: SKF - ASHEVILLE
SAMPLE #: 5355-006
PROJECT #: 70144.02
WORK ORDER #: 5355
WI DNR LAB ID: 113138520

REPORT DATE: 09/02/94
COLLECTION DATE: 08/18/94
STATION ID: MW-24

VOLATILE ORGANICS ANALYSIS REPORT

COMPOUND	RESULT	UNITS
1,2-Dichloroethene, total	<200	ug/L
Trichloroethene	2200	ug/L
Vinyl chloride	<100	ug/L

Kevin P. Meeh 9-6-94
Approval Signature

RMT LABORATORIES - 744 HEARTLAND TRAIL - MADISON, WI - 53717-1934 - P.O. BOX 8923 - MADISON, WI - 53708-8923 - 608/831-4444 - 608/831-7530 FAX

CLIENT: SKF - ASHEVILLE
SAMPLE #: 5355-004
PROJECT #: 70144.02
WORK ORDER #: 5355
WI DNR LAB ID: 113138520

REPORT DATE: 09/02/94
COLLECTION DATE: 08/18/94
STATION ID: MW-25

VOLATILE ORGANICS ANALYSIS REPORT

COMPOUND	RESULT	UNITS
1,2-Dichloroethene, total	<2.0	ug/L
Trichloroethene	<1.0	ug/L
Vinyl chloride	<1.0	ug/L

Kevin P. Meek 9-6-94
Approval Signature

RMT LABORATORIES - 744 HEARTLAND TRAIL - MADISON, WI - 53717-1934 - P.O. BOX 8923 - MADISON, WI - 53708-8923 - 608/831-4444 - 608/831-7530 FAX

CLIENT: SKF - ASHEVILLE
SAMPLE #: 5355-001
PROJECT #: 70144.02
WORK ORDER #: 5355
WI DNR LAB ID: 113138520

REPORT DATE: 09/02/94
COLLECTION DATE: 08/18/94
STATION ID: MW-26

VOLATILE ORGANICS ANALYSIS REPORT

COMPOUND	RESULT	UNITS
1,2-Dichloroethene, total	8.5	ug/L
Trichloroethene	17	ug/L
Vinyl chloride	<1.0	ug/L

Ken P. Meek 9-6-94
Approval Signature

RMT LABORATORIES - 744 HEARTLAND TRAIL - MADISON, WI - 53717-1934 - P.O. BOX 8923 - MADISON, WI - 53708-8923 - 608/831-4444 - 608/831-7530 FAX

CLIENT: SKF - ASHEVILLE
SAMPLE #: 5355-005
PROJECT #: 70144.02
WORK ORDER #: 5355
WI DNR LAB ID: 113138520

REPORT DATE: 09/02/94
COLLECTION DATE: 08/18/94
STATION ID: MW-27

VOLATILE ORGANICS ANALYSIS REPORT

COMPOUND	RESULT	UNITS
1,2-Dichloroethene, total	<2.0	ug/L
Trichloroethene	<1.0	ug/L
Vinyl chloride	<1.0	ug/L

Kari P. Meek 9-6-94
Approval Signature

RMT LABORATORIES - 744 HEARTLAND TRAIL - MADISON, WI - 53717-1934 - P.O. BOX 8923 - MADISON, WI - 53708-8923 - 608/831-4444 - 608/831-7530 FAX

CLIENT: SKF - ASHEVILLE
SAMPLE #: 5355-008
PROJECT #: 70144.02
WORK ORDER #: 5355
WI DNR LAB ID: 113138520

REPORT DATE: 09/02/94
COLLECTION DATE: 08/18/94
STATION ID: SW-1

VOLATILE ORGANICS ANALYSIS REPORT

COMPOUND	RESULT	UNITS
1,2-Dichloroethene, total	<2.0	ug/L
Trichloroethene	<1.0	ug/L
Vinyl chloride	<1.0	ug/L

Kari P. Meek 9-6-94
Approval Signature

RMT LABORATORIES · 744 HEARTLAND TRAIL · MADISON, WI · 53717-1934 · P.O. BOX 8923 · MADISON, WI · 53708-8923 · 608/831-4444 · 608/831-7530 FAX

CLIENT: SKF - ASHEVILLE
SAMPLE #: 5355-010
PROJECT #: 70144.02
WORK ORDER #: 5355
WI DNR LAB ID: 113138520

REPORT DATE: 09/02/94
COLLECTION DATE: 08/18/94
STATION ID: SW-2

VOLATILE ORGANICS ANALYSIS REPORT

COMPOUND	RESULT	UNITS
1,2-Dichloroethene, total	<2.0	ug/L
Trichloroethene	1.5	ug/L
Vinyl chloride	<1.0	ug/L

Kari P. Meek 9-6-94
Approval Signature

RMT LABORATORIES - 744 HEARTLAND TRAIL - MADISON, WI - 53717-1934 - P.O. BOX 8923 - MADISON, WI - 53708-8923 - 608/831-4444 - 608/831-7530 FAX

CLIENT: SKF - ASHEVILLE
SAMPLE #: 5355-012
PROJECT #: 70144.02
WORK ORDER #: 5355
WI DNR LAB ID: 113138520

REPORT DATE: 09/02/94
COLLECTION DATE: 08/19/94
STATION ID: SW-3

VOLATILE ORGANICS ANALYSIS REPORT

COMPOUND	RESULT	UNITS
1,2-Dichloroethene, total	<2.0	ug/L
Trichloroethene	2.5	ug/L
Vinyl chloride	<1.0	ug/L

Kevin P. Meek 9-6-94
Approval Signature

RMT LABORATORIES - 744 HEARTLAND TRAIL - MADISON, WI - 53717-1934 - P.O. BOX 8923 - MADISON, WI - 53708-8923 - 608/831-4444 - 608/831-7530 FAX

CLIENT: SKF - ASHEVILLE
SAMPLE #: 5355-013
PROJECT #: 70144.02
WORK ORDER #: 5355
WI DNR LAB ID: 113138520

REPORT DATE: 09/02/94
COLLECTION DATE: 08/19/94
STATION ID: SW-4

VOLATILE ORGANICS ANALYSIS REPORT

COMPOUND	RESULT	UNITS
1,2-Dichloroethene, total	<2.0	ug/L
Trichloroethene	2.6	ug/L
Vinyl chloride	<1.0	ug/L

Ken P. Meek 9-6-94
Approval Signature

RMT LABORATORIES - 744 HEARTLAND TRAIL - MADISON, WI - 53717-1934 - P.O. BOX 8923 - MADISON, WI - 53708-8923 - 608/831-4444 - 608/831-7530 FAX

CLIENT: SKF - ASHEVILLE
SAMPLE #: 5355-002
PROJECT #: 70144.02
WORK ORDER #: 5355
WI DNR LAB ID: 113138520

REPORT DATE: 09/02/94
COLLECTION DATE: 08/18/94
STATION ID: PRODUCTION WELL

VOLATILE ORGANICS ANALYSIS REPORT

COMPOUND	RESULT	UNITS
1,2-Dichloroethene, total	280	ug/L
Trichloroethene	130	ug/L
Vinyl chloride	45	ug/L

Kevin P. Meech 9-6-94
Approval Signature

RMT LABORATORIES - 744 HEARTLAND TRAIL - MADISON, WI - 53717-1934 - P.O. BOX 8923 - MADISON, WI - 53708-8923 - 608/831-4444 - 608/831-7530 FAX

CLIENT: SKF - ASHEVILLE
SAMPLE #: 5355-014
PROJECT #: 70144.02
WORK ORDER #: 5355
WI DNR LAB ID: 113138520

REPORT DATE: 09/02/94
COLLECTION DATE:
STATION ID: TRIP BLANK

VOLATILE ORGANICS ANALYSIS REPORT

COMPOUND	RESULT	UNITS
1,2-Dichloroethene, total	<2.0	ug/L
Trichloroethene	<1.0	ug/L
Vinyl chloride	<1.0	ug/L

Kevin P. Meek 9-6-94
Approval Signature

RMI INC.
LABORATORIES
Madison, WI 53717
744 Heartland Trail
Phone (608) 831-4444
FAX (608) 831-7530
Fox Valley, WI
Columbus, OH
Milwaukee, WI
ashville, TN
Greenville, SC
Augusta, GA
Lansing, MI
Chicago, IL
Los Angeles, CA
incinnati, OH
Madison, WI

F-268 (R2/92)
(Use Black Ink Only)

CHAIN OF CUSTODY RECORD

№ 048919

Bottles Prepared by: SAM TURNER
Date/Time: 8-17-94

Project No.: 70144.02
Client: SKF Ashville

Filtered (Yes/No): N
Preserved (Code): E

Code: A - None, B - HNO3, C - H_2SO_4, D - NaOH, E - HCl, F - ____

Lab No. 5355	Yr. 94 Date	Time	Sample Station ID	Total Number Of Containers	Container Inventory: 40 ml	Container Inventory: SEPTA	MATRIX GW BTW 8/22/94	Comments:
001	8/18	1155	MW-26	3	3			
002	8/18	1230	Production WELL	3	3			
003	8/18	1340	MW-23	3	3			
004	8/18	1400	MW-25	3	3			
005	8/18	1430	MW-27	3	3			
006	8/18	1500	MW-24	3	3			
007	8/18	1630	MW-21	3	3			
008	8/18	1618	SW-1	3	3			
009	8/18	1640	MW-18	3	3			
010	8/18	1700	SW-2	3	3			
011	8/19	137	MW-~~21~~ 19 BTW 8/22/94	3	3			
012	8/19	1100	SW-3	3	3			
013	8/19	1030	SW-4	3	3			
014	8/18		TRIP BLK	3	3			

SAMPLER

Relinquished by (Sig.)	Date/Time	Received by (Sig.)	Date/Time
① [signature]	8/19/94 1800	② FED EX Shipper Name & # 7654115913	8/19/94 1830
③ FedEx	8.20.94 1045	④ walk in Shipper Name & #	8.20.94 1045
⑤ Walkin	8/22/94 8:00 am	⑥ Betsy Nabfeld Shipper Name & #	8/22/94 8:00 am

HAZARDS ASSOCIATED WITH SAMPLES

(For Lab Use Only)
Receipt Temp: 3°C
Receipt pH: Na

~~Custody Seal~~ Present/Absent Seal Intact/Not Intact Seal #'s

WHITE - LABORATORY COPY YELLOW - REPORT APPENDIX PINK - SAMPLER/SUBMITTER

RMT LABORATORIES - 744 HEARTLAND TRAIL - MADISON, WI - 53717-1934 - P.O. BOX 8923 - MADISON, WI - 53708-8923 - 608/831-4444 - 608/831-7530 FAX

PROJECT NAME: SKF - ASHVILLE
PROJECT NO: 70144.02
WORK ORDER NO: 5557
WI DNR LAB ID: 113138520

REPORT DATE:10/03/94
PAGE NO: 1

SAMPLE NO.	STATION ID	COLL. DATE	SAMPLE NO.	STATION ID	COLL. DATE
5557-001	PROD WELL	09/22/94			
5557-002	MW-23	09/22/94			
5557-003	MW-24	09/22/94			
5557-004	MW-19	09/22/94			
5557-005	TRIP BLANK	09/22/94			

Note: Sample 5557-001 is from Dotson unused production well #1

Kenneth A Lauber
11-3-94

I certify that the data contained in this Final Report has been generated and reviewed in accordance with approved methods and RMT Laboratory Standard Operating Procedure. Exceptions, if any, are discussed in the accompanying sample narrative. Release of this Final Report is authorized by RMT Laboratory management, as is verified by the following signature.

Kevin P. Mach
Approval Signature

10-3-94
Date

RMT LABORATORIES - 744 HEARTLAND TRAIL - MADISON, WI - 53717-1934 - P.O. BOX 8923 - MADISON, WI - 53708-8923 - 608/831-4444 - 608/831-7530 FAX

PROJECT NAME: SKF - ASHVILLE
PROJECT NUMBER: 70144.02
LAB SAMPLE NUMBER: 5557-001
STATION ID: PROD WELL
WI DNR LAB ID: 113138520

REPORT DATE: 10/03/94
COLLECTION DATE: 09/22/94
ANALYSIS DATE: 09/28/94
METHOD: 8021

VOLATILE ORGANICS ANALYSIS REPORT

COMPOUND	RESULT	EQL	CODE	UNITS
1,2-Dichloroethene, total	720	20		ug/L
Trichloroethene	2100	10		ug/L
Vinyl chloride	83	10		ug/L

RMT LABORATORIES - 744 HEARTLAND TRAIL - MADISON, WI - 53717-1934 - P.O. BOX 8923 - MADISON, WI - 53708-8923 - 608/831-4444 - 608/831-7530 FAX

PROJECT NAME: SKF - ASHVILLE
PROJECT NUMBER: 70144.02
LAB SAMPLE NUMBER: 5557-002
STATION ID: MW-23
WI DNR LAB ID: 113138520

REPORT DATE: 10/03/94
COLLECTION DATE: 09/22/94
ANALYSIS DATE: 09/30/94
METHOD: 8021

VOLATILE ORGANICS ANALYSIS REPORT

COMPOUND	RESULT	EQL	CODE	UNITS
1,2-Dichloroethene, total	<400	400		ug/L
Trichloroethene	5700	200		ug/L
Vinyl chloride	<200	200		ug/L

RMT LABORATORIES - 744 HEARTLAND TRAIL - MADISON, WI - 53717-1934 - P.O. BOX 8923 - MADISON, WI - 53708-8923 - 608/831-4444 - 608/831-7530 FAX

PROJECT NAME: SKF - ASHVILLE
PROJECT NUMBER: 70144.02
LAB SAMPLE NUMBER: 5557-003
STATION ID: MW-24
WI DNR LAB ID: 113138520

REPORT DATE: 10/03/94
COLLECTION DATE: 09/22/94
ANALYSIS DATE: 09/27/94
METHOD: 8021

VOLATILE ORGANICS ANALYSIS REPORT

COMPOUND	RESULT	EQL	CODE	UNITS
1,2-Dichloroethene, total	<10	10		ug/L
Trichloroethene	200	5.0		ug/L
Vinyl chloride	<5.0	5.0		ug/L

RMT LABORATORIES - 744 HEARTLAND TRAIL - MADISON, WI - 53717-1934 - P.O. BOX 8923 - MADISON, WI - 53708-8923 - 608/831-4444 - 608/831-7530 FAX

PROJECT NAME: SKF - ASHVILLE
PROJECT NUMBER: 70144.02
LAB SAMPLE NUMBER: 5557-004
STATION ID: MW-19
WI DNR LAB ID: 113138520

REPORT DATE: 10/03/94
COLLECTION DATE: 09/22/94
ANALYSIS DATE: 09/27/94
METHOD: 8021

VOLATILE ORGANICS ANALYSIS REPORT

COMPOUND	RESULT	EQL	CODE	UNITS
1,2-Dichloroethene, total	<20	20		ug/L
Trichloroethene	400	10		ug/L
Vinyl chloride	<10	10		ug/L

RMT LABORATORIES - 744 HEARTLAND TRAIL - MADISON, WI - 53717-1934 - P.O. BOX 8923 - MADISON, WI - 53708-8923 - 608/831-4444 - 608/831-7530 FAX

PROJECT NAME: SKF - ASHVILLE
PROJECT NUMBER: 70144.02
LAB SAMPLE NUMBER: 5557-005
STATION ID: TRIP BLANK
WI DNR LAB ID: 113138520

REPORT DATE: 10/03/94
COLLECTION DATE: 09/22/94
ANALYSIS DATE: 09/26/94
METHOD: 8021

VOLATILE ORGANICS ANALYSIS REPORT

COMPOUND	RESULT	EQL	CODE	UNITS
1,2-Dichloroethene, total	<2.0	2.0		ug/L
Trichloroethene	<1.0	1.0		ug/L
Vinyl chloride	<1.0	1.0		ug/L

Madison, WI 53717
744 Heartland Trail
Phone (608) 831-4444
FAX (608) 831-7530

Fox Valley, WI
Columbus, OH
Milwaukee, WI

Augusta, GA
Lansing, MI

Los Angeles, CA

LABORATORIES

F-268 (R2/92)
(Use Black Ink Only)

CHAIN OF CUSTODY RECORD

№ 048722

Bottles Prepared by: SDT	Date/Time —
Project No. 70144.02	Client: SKF-Asheville

Container Inventory: 40 ml septa vials

Filtered (Yes/No): N

Preserved (Code): C

Code: A - None; B - HNO3; C - H_2SO_4; D - NaOH; E - HCl; F - _____

Lab No. 5557	Yr. 94 Date	Time	Sample Station ID	Total Number Of Containers								MATRIX	Comments:
001	9-22	1320	Prod. Well	3	3							GW	
002		1500	MW-23	3	3								
003		1610	MW-24	3	3								
004		1710	MW-19	3	3							DF 9-24-94	
005		—	Trip Blank	3	3								

SAMPLER Relinquished by (Sig.)	Date/Time	Received by (Sig.)	Date/Time
① W. Bailey	9/23/94 1815	② Fed Ex Shipper Name & # 7054115183	9/23/94 1815
Relinquished by (Sig.) ③	Date/Time	Received by (Sig.) ④ Shipper Name & #	Date/Time
Relinquished by (Sig.) ⑤ Fed Ex	Date/Time 9-24-94 1030	Received by (Sig.) ⑥ Shipper Name & # Dang Fox	Date/Time 9-24-94 1030

HAZARDS ASSOCIATED WITH SAMPLES

(For Lab Use Only)

Receipt Temp: 3°C

Receipt pH: N/A

Custody Seal Present/Absent Seal Intact/Not Intact Seal #'s

WHITE - LABORATORY COPY YELLOW - REPORT APPENDIX PINK - SAMPLER/SUBMITTER

APPENDIX K

MEMO - AVAILABILITY OF TREATED WATER ALONG GASHES CREEK ROAD

RMT INC.

INTEROFFICE MEMORANDUM

DATE: July 8, 1993

TO: Bob Stevens and Dan Madison

FROM: Jim McElduff

SUBJECT: SKF: Availability of Treated Water Along Gashes Creek Road

According to records maintained by the Asheville-Buncombe Water Authority, all but three of the homes located on Gashes Creek Road have active accounts. The three homes that do not appear to use water from the public utility are located on a ridge approximately 1,500 feet northeast of the Girmes facility. An exact correlation of structures to water accounts was not possible since some of the homes appeared to be unoccupied and because water authority records indicated accounts in four locations where structures were not observed. None of the public offices in Asheville or Buncombe County have a list of privately owned water wells.

Field observations were made from the road and none of the residents were contacted. Ruel Austin, supervisor of the Customer Services Division at the Water Authority, reviewed the following list of addresses and provided the associated information.

Gashes Creek Road Addresses	Water Account	
101	Yes	
107	No	
111	No	
117	No	
123	Yes	
124	Yes	
128	Yes	
129	Yes	
137	Yes	
140	Yes	
141	Yes	
145	Yes	
146	Yes	(Water Authority records show two inactive accounts between
150	Yes	Nos. 146 and 152. However, no unnumbered houses
152	Yes	were observed.)
153	Yes	
158	Yes	
159	Yes	
162	Yes	
165	Yes	
168	Yes	(One inactive account between Nos. 168 and 169.)
169	Yes	
172	Yes	(Two accounts at this address.)
175	Yes	
184	Yes	
196	Yes	(One inactive account between Nos. 196 and 204 - no
204	Yes	observed houses.)
208	Yes	

DISTRIBUTION: Billy Clarke