CORRECTIVE ACTION PLAN

GIRMES SITE
FORMERLY SKF USA INC.
ASHEVILLE, NORTH CAROLINA

April 1996

David Roos
Process Department

Dan O. Madison, Jr., P.G.
Consulting Hydrogeologist

Robert P. Stevens, P.E.
Project Manager

NORTH CAROLINA LICENSED SEAL 249 4/26/96 GEOLOGIST DAN O. MADISON, JR.

NORTH CAROLINA PROFESSIONAL SEAL 19646 4/26/96 ENGINEER ROBERT P. STEVENS

RMT, INC. — GREENVILLE, SC
100 VERDAE BOULEVARD • 29607-3825
P.O. BOX 16778 • 29606-6778
864/281-0030 • 864/281-0288 FAX

DIVISION OF ENVIRONMENTAL MANAGEMENT
CERTIFICATION FOR THE SUBMITTAL OF A CORRECTIVE ACTION PLAN
UNDER 15A NCAC 2L.0106(c)

Responsible Party: SKF USA Inc.
Address: 1100 First Avenue
City: King of Prussia, State: PA, Zip Code: 19406

Site Name: Girmes Site, Formerly SKF USA Inc.
Address: Old Highway 74 East
City: Asheville, Co.: Buncombe, Zip Code: 28802
Groundwater Section Incident Number: 10032

I, Robert P. Stevens, a Professional Engineer/~~Licensed Geologist~~ (circle one) for RMT, Inc. do hereby certify that the information indicated below is enclosed as part of the required Corrective Action Plan (CAP) and that to the best of my knowledge the data, site assessments, engineering plans and other associated materials are correct and accurate.

(Each item must be initialed by hand by the certifying licensed professional)

1. RPS A listing of the names and addresses of those individuals required to be notified to meet the notification requirements of 15A NCAC 2L .0114(a) is enclosed. Copies of letters and certified mail* receipts are also enclosed. Not enclosed. To be Furnished under separate cover.

2. RPS A Professional Engineer or Licensed Geologist has prepared, reviewed, and certified all applicable parts of the CAP in accordance with 15A NCAC 2L .0103(e).

3. RPS A site assessment is attached or on file at the appropriate Regional Office which provides the information required by 15A NCAC 2L .0106(g).

4. RPS A description of the proposed corrective action and supporting justification is enclosed.

5. RPS Specific plans and engineering details for the restoration of groundwater quality are enclosed and propose the use of the best available technology for the restoration of groundwater quality to the levels of the groundwater standards prescribed in 15A NCAC 2L .0202.

6. RPS A schedule for the implementation and operation of the CAP is enclosed.

*Certified mail receipts will be forwarded under separate cover.

(OVER)

Executive Summary

This Corrective Action Plan (CAP) has been prepared to address affected ground water at the Girmes Site, formerly SKF USA, Inc., located on Old Highway 74 East, Asheville, North Carolina. A Comprehensive Site Assessment (CSA) (RMT, November 1994) and this CAP have been completed in response to the Notice of Violation dated April 21, 1993 (Groundwater Incident Number 10038), and associated correspondence between SKF USA, Inc., and North Carolina Department of Environment, Health, and Natural Resources (NC DEHNR).

The CAP has been developed according to criteria established in two documents:

- North Carolina Administrative Code (NCAC) Title 15A, Subchapter 2L; Classifications and Water Quality Standards Applicable to the Groundwaters of North Carolina dated November 8, 1993.
- The North Carolina Department of Environment, Health, and Natural Resources (NC DEHNR) Division of Environmental Resources (DEM) Groundwater Section 15A NCAC 2L "Implementation Guidance" dated October 7, 1994.

The CSA identified two areas of ground water at the site that contain trichloroethene, vinyl chloride, and 1,2-dichloroethene. The outline for the CAP parallels conditions at the site, and proposes separate corrective actions for each area of concern.

The purpose of this documentation is to delineate the technical rationale supporting corrective actions that are proposed to address affected ground water at the site.

Table of Contents

Section	Page
Certification	
Executive Summary	E-1
1. Introduction	1-1
1.1 Purpose	1-1
1.2 Areas of Concern	1-1
2. Site Background	2-1
2.1 Regional Geology	2-1
2.2 Site Geology	2-1
2.3 Site Hydrogeology	2-2
2.3.1 Water Table Configuration	2-2
2.3.2 Hydraulic Conductivity	2-3
2.3.3 Rate of Ground Water Flow	2-7
2.4 Ground Water Quality	2-9
2.4.1 CSA Investigation	2-9
2.4.2 Post CSA Investigations	2-12
2.4.3 Northeast Plume Definition	2-21
2.4.4 Southwest Plume Definition	2-21
2.4.5 Dotson Plume Definition	2-22
2.5 Migration Pathways and Potential Receptors	2-23
2.5.1 Migration Pathways	2-23
2.5.2 Potential Receptors	2-24
3. Corrective Action - Southwest Plume	3-1
3.1 Source Identification for Southwest Plume	3-1
3.2 Evaluation of Remedial Alternatives	3-1
3.3 Design Criteria	3-3
3.4 Process Approach	3-3
3.5 System Layout	3-10
3.6 System Security and Safety Measures	3-10
3.7 Operations and Maintenance Manual	3-10
3.8 Ground Water Monitoring Program	3-10
3.9 Required Permits	3-11
4. Corrective Action - Northeast Plume	4-1
4.1 Source Identification	4-1
4.2 Evaluation of Remedial Alternatives	4-1
4.3 Capacity to Degrade	4-3
4.4 Time and Direction of Constituent Travel	4-5
4.5 Constituent Concentration at Potential Receptors	4-6
4.6 Potential Off-Site Migration	4-6
4.7 Effects on Surface Water Quality	4-6

Section **Page**

4.8 Ground Water Monitoring Program 4-6
4.9 Access Agreements 4-7
4.10 Public Notice 4-7

5. Compliance with Environmental Law 5-1

6. Schedule 6-1

7. References 7-1

List of Figures

Figure 1-1 Site Location 1-2
Figure 1-2 Areas of Concern 1-3
Figure 2-1 Adjacent Property Owners 2-27
Figure 3-1 Flow Diagram of Treatment System 3-5
Figure 3-2 Typical Recovery Well Construction Diagram 3-7
Figure 3-3 Low Profile Air Stripper 3-9

List of Tables

Table 2-1 Summary of Hydraulic Conductivity Measurements - Monitoring Wells 2-4
Table 2-2 Summary of Hydraulic Conductivity Measurements - Hydrocone® Sample Locations 2-5
Table 2-3 Summary of Aquifer Pumping Test Results 2-8
Table 2-4 Summary of Volatile Organics Analyses, June 1995 2-13
Table 2-5 Summary of Inorganics Analyses, June 1995 2-14
Table 2-6 Summary of Gases in Water Analyses, June 1995 2-15
Table 2-7 Summary of Volatile Organics Analyses, January/February 1996 2-16
Table 2-8 Summary of Inorganics Analyses, January/February 1996 2-17
Table 2-9 Summary of Gases in Water Analyses, January/February 1996 2-18
Table 2-10 Summary of Trichloroethene Concentrations Detected in Ground Water 2-19
Table 2-11 Summary of 1,2-Dichloroethene Concentrations Detected in Ground Water 2-20
Table 2-12 Summary of Adjacent Property Owners 2-26
Table 3-1 Remedial Options for Restoring Ground Water Quality-Southwest Plume 3-2
Table 3-2 Capture Zone Modeling Analysis Input Parameters 3-4
Table 4-1 Remedial Options for Restoring Ground Water Quality-Northeast Plume 4-2
Table 4-2 Constituent Velocity Estimates 4-6

List of Appendices

Appendix A Well Construction Diagrams and Boring Logs for Test Wells RW-1 and RW-2 and Monitoring Wells MW-28 and MW-28A
Appendix B Laboratory Reports for Ground Water Samples Collected in June 1995 and January/February 1996
Appendix C Equipment Vendors Cut Sheets
Appendix D Engineering Calculations
Appendix E Public Notice

Section		Page

List of Plates

Plate 1	Data Point Locations
Plate 2	Hydrogeologic Cross Section A-A´
Plate 3	Hydrogeologic Cross Section B-B´
Plate 4	Hydrogeologic Cross Section C-C´
Plate 5	Configuration of Water Table - September 19, 1994
Plate 6	Concentration of VOCs in Ground Water - January 30 - February 2, 1996
Plate 7	Trichloroethene Concentrations in Northeast Plume During the CSA and January/February 1996
Plate 8	Proposed Location of Recovery Wells Piping and Treatment Building
Plate 9	Proposed Location of Recovery Wells and Estimated Capture Zones
Plate 10	Remedial Action Schedule

Section 1
Introduction

This Corrective Action Plan (CAP) has been prepared to address ground water with dissolved volatile organic compounds (VOCs) at the Girmes site located on Old Highway 74 East in Asheville, North Carolina. The facility is boarded by the North Carolina Department of Transportation (NC DOT) to the north and northeast. The southwest side of the site is boarded by Gashes Creek. Dotson Metal Finishing (Dotson) is the most significant property on the other side of Gashes Creek. The facility location is shown on Figure 1-1. A Comprehensive Site Assessment (RMT, November 1994) and this CAP have been completed in response to the Notice of Violation dated April 21, 1993 (Groundwater Incident Number 10032), and associated correspondence between SKF USA, Inc. (SKF), and the North Carolina Department of Environment, Health, and Natural Resources (NC DEHNR).

The CAP has been developed according to criteria established in two documents:

- North Carolina Administrative Code (NCAC) Title 15A, Subchapter 2L; Classifications and Water Quality Standards Applicable to the Groundwaters of North Carolina dated November 8, 1993; and
- The (NC DEHNR), Division of Environmental Resources (DEM) Groundwater Section 15A NCAC 2L "Implementation Guidance" dated October 7, 1994.

1.1 Purpose

The purpose of this documentation is to delineate the technical rationale supporting corrective actions that are proposed to address affected ground water at the site.

1.2 Areas of Concern

The Comprehensive Site Assessment (CSA) identified two areas of concern at the Girmes site. Each is shown on Figure 1-2. For clarity, the area on the southwest side of the facility will be referred to as the southwest plume, and the area located to the northeast will be referred to as the northeast plume.

Plate 1 shows the locations of ground water data points. Since submittal of the April 1995 Workplan for Correction Action Plan Field Work to NC DEHNR, the Data Point Location Map has been updated to include MW-28 and MW-28A. These wells were installed at the request of NC DEHNR to monitor water quality downgradient of the southwest plumes. Also added at the request of NC DEHNR are test recovery wells, RW-1 and RW-2 which were installed to test bedrock hydraulic characteristics.

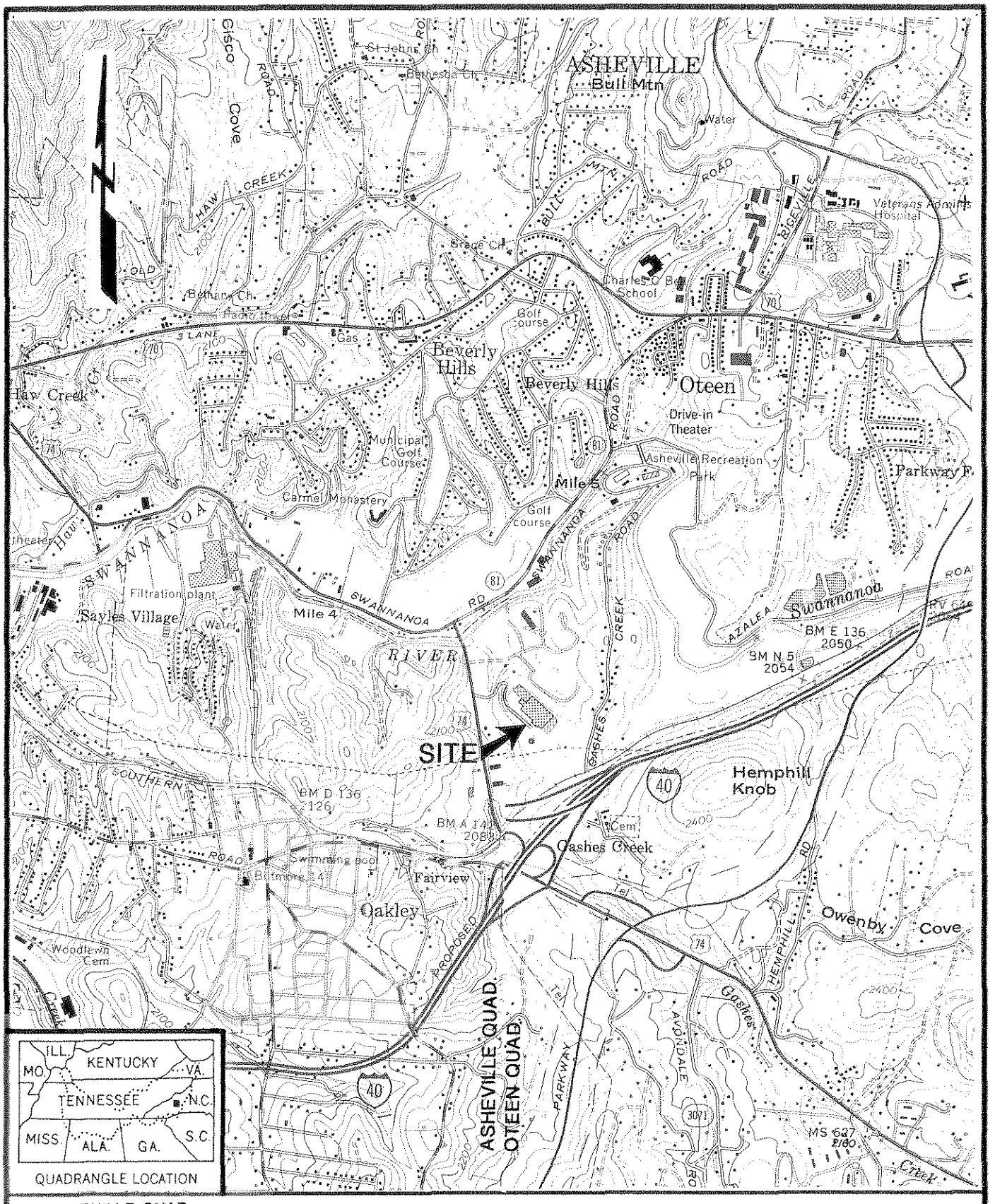

ASHEVILLE QUAD
OTEEN QUAD

RMT INC

70144.02
1194

FIGURE 1
SITE LOCATION MAP
SCALE: 1"=2000'

GIRMES SITE
FORMERLY SKF-USA INC.
ASHEVILLE, NC

THE PRINT MACHINE, INC. N03478

/usr3/hydro/7014401h/701441-2.fig
cgh 4-9-96

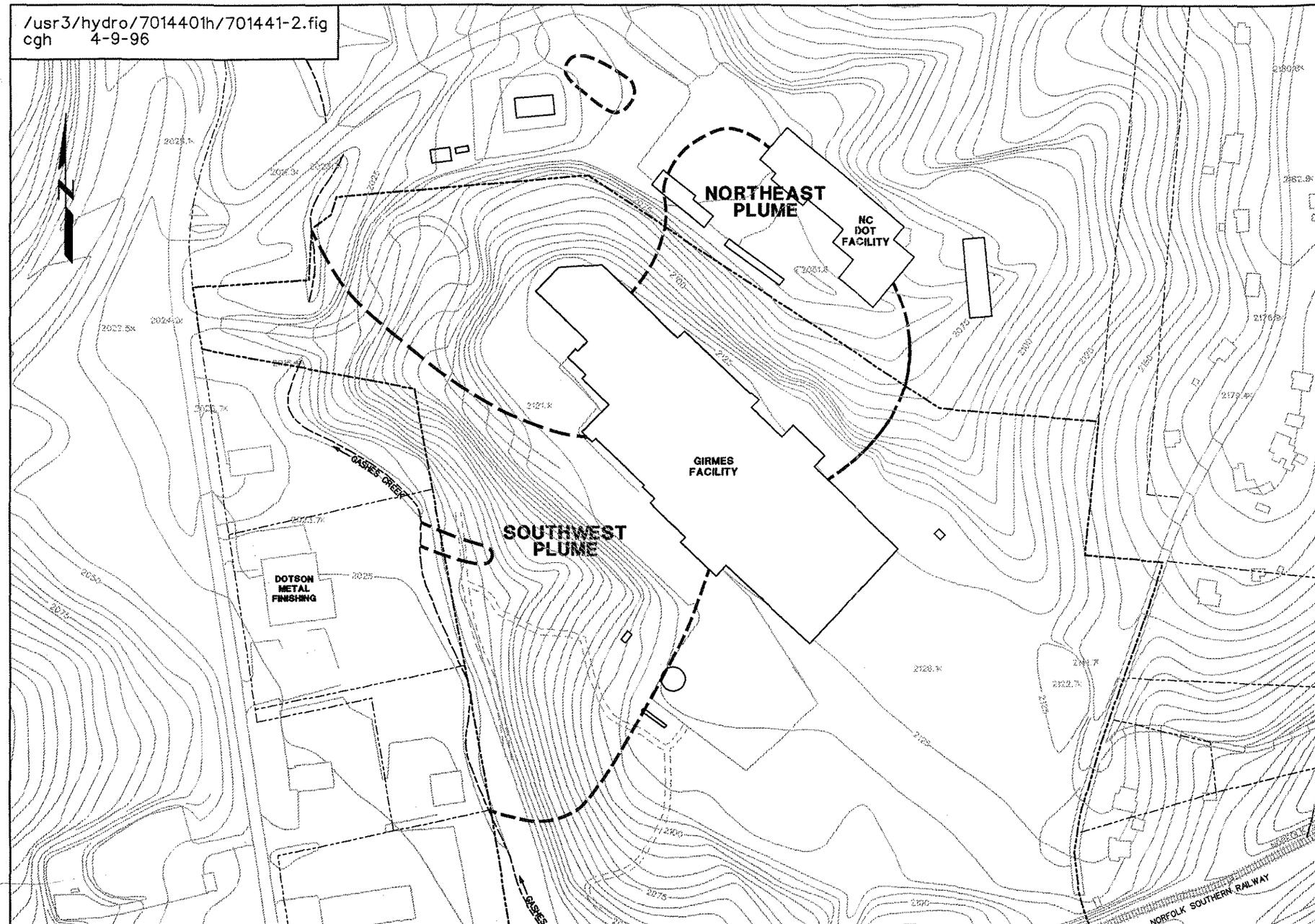

LEGEND

APPROXIMATE LIMIT OF GROUND WATER WITH VOCs IN EXCEEDANCE OF 2L LIMITS.

0 200 400
SCALE IN FEET

RMT 70144.05
0296

FIGURE 1-2

AREAS OF CONCERN

GIRMES SITE, formerly SKF USA
ASHEVILLE, NORTH CAROLINA

In compliance with Subchapter 2L, Section .0106(h), this CAP includes four specific items for each of the affected ground water plumes:

- A description of the corrective actions and reasons for their selection;
- Specific plans, including engineering details where applicable, for restoring ground water quality;
- A schedule for implementation and operation for the plans; and
- A monitoring plan for evaluating the effectiveness of the corrective actions and the movement of the southwest and northeast plumes.

Section 2
Site Background

2.1 Regional Geology

The Girmes site is located in Buncombe County, North Carolina, in the southeast area of Asheville (see Figure 1-1). The entire county lies within the Blue Ridge Physiographic Province which is typified by steep mountain ridges with high relief (100 to 3000 feet), frequent outcrops of bedrock, and valleys largely underlain by saprolite on crystalline rocks. Alluvium is generally confined to narrow flood plains with thicknesses of less than 100 feet. Colluvial deposits occur at the foot of steep slopes and consist of boulders and cobbles generated by mechanical weathering processes (Soller and Mills, 1991). The geology in the Asheville area has been identified as the Ashe Formation, which is a sequence of interlayered metasedimentary (gneisses, schists) and metavolcanic rocks (amphibolite) (Miller, Jr., 1990).

2.2 Site Geology

The site-specific geology has been assessed on the basis of boring logs prepared for 28 monitoring wells installed by Girmes prior to or during the CSA. In addition, soil characteristics were measured at 11 locations on the Girmes, NC DOT, and Dotson properties using continuous downhole cone penetrometer soundings (Piezocone) during the CSA. Locations of borings and soundings are shown on Plate 1. Boring logs for these wells along with piezocone sounding test data are provided in the appendices to the CSA.

Three hydrogeologic cross sections were constructed to illustrate subsurface geology of the site. Cross section A-A' (Plate 2) depicts the geology from west to east beneath the Girmes site. Cross section B-B' (Plate 3) depicts the geology from north to south beneath the eastern end of the Girmes site and the west side of the NC DOT facility. Cross section C-C' (Plate 4) depicts the geology beneath the southwestern edge of the site.

The Girmes site sits on a northwest trending hill that is approximately 80 feet higher in elevation than the adjacent properties. The hill is composed of saprolite soils covering crystalline bedrock. Saprolite throughout the site consists of silts, silty sands, and clayey silty sands. The NC DOT facility is located in a drainage swale adjacent to the Girmes site. The NC DOT facility was constructed such that the original drainage in the swale was channeled into a concrete storm drain. The swale was subsequently covered with soil fill material cut from adjacent slopes. Fill material was present at all seven well locations and all five Piezocone locations at the NC DOT facility. Fill thickness ranged from 7 feet at well MW-15 to 24 feet at

Piezocone sounding PC-5. Fill material consists primarily of sand, silt, and clayey soils. Piezocone data confirmed the nature and thickness of the fill material.

The Dotson facility is located in the floodplain of Gashes Creek. The alluvial deposits are composed of a silty sand layer underlain by a layer of gravel. The gravel layer is generally 5 feet thick and rests on saprolitic soils that are generally 10 feet in thickness.

Depth to bedrock beneath the Girmes facility ranges from 25 to 43 feet below land surface with the bedrock surface dipping to the northeast, northwest, and southwest. At the NC DOT facility, depth to bedrock ranges from 33.5 feet below land surface at well MW-16A, to 65 feet below land surface at well MW-15A. Depth to bedrock in the vicinity of the Dotson facility ranges from 17.5 to 21 feet. The resistant bedrock that comprises the bulk of the hill underlying the Girmes facility is generally observed to be a competent green-black amphibolite gneiss. This type of rock is composed primarily of amphiboles interlayered with some felsic minerals. The lower flanks of the hill are composed of the amphibolite gneiss which appear to be interlayered with a mica schist and a felsic gneiss. Bedrock is primarily composed of mica schist in the vicinity of wells MW-4, MW-5, and MW-17 on the northeast side of the Girmes facility, and near MW-22 and MW-24 on the southwest side of the site. Minor pegamite and quartz dikes are also present. The bedrock observed during drilling along the southwestern edge of the site was found to be more fractured compared to bedrock observed on top of the ridge and on the NC DOT property.

2.3 Site Hydrogeology

Site hydrogeology is based on data obtained from 17 ground water monitoring wells located on the Girmes property, eight monitoring wells located at the NC DOT facility, and three monitoring wells at the Dotson facility. Monitoring well locations are shown on Plate 1. Well construction diagrams are presented in the appendices of the CSA.

2.3.1 Water Table Configuration

Ground water elevations obtained in September 1994 from monitoring wells screened in saprolite and bedrock, the unused production well #1 (Dotson), and a surface water elevation measured in Gashes Creek (SG-1) were used to construct the water table map shown on Plate 5. The map shows that the water table mimics the ground topography. Ground water is recharged from the topographically higher area at the southeast end of the Girmes site, and flows northwest along the ridge. The ridge acts as a ground water divide and directs a portion of ground water flow southwest towards Gashes Creek and a portion of ground water flow north and northeast towards the NC DOT facility. The precise location of the ground water divide underneath the ridge has not been determined. Ground water at the NC DOT facility flows northwest towards the

Swannanoa River, where it is expected to discharge. On the southwest side of the Girmes site, ground water flows towards Gashes Creek where flow is expected to discharge. Ground water on the Dotson property flows in a northeasterly direction towards Gashes Creek.

The water table is below the bedrock surface on top of the ridge at the Girmes site and in the vicinity of wells MW-12 and MW-17 at the NC DOT facility. The water table is at or just above the bedrock surface on the southwest side of the Girmes property near Gashes Creek. The water table is above bedrock throughout the rest of the site including the entire Dotson property and most of the NC DOT property.

Horizontal ground water gradients range from 0.074 ft/ft on the northeast side of the Girmes site, to 0.084 ft/ft on the southwest side of the Site. Across the creek, gradients are very low, as evidenced by the low topographic relief. The gradient calculated in the vicinity of MW-25 is only 0.0067 ft/ft. At the NC DOT facility, gradients range from 0.014 ft/ft in the vicinity of MW-16, to 0.069 ft/ft near MW-13.

Water levels measured at the nested well pairs MW-15/MW-15A and MW-16/MW-16A were used to calculate vertical ground water gradients. Based on September 19, 1994, water level measurements, the well pair MW-15/MW-15A had a positive vertical gradient of 0.027 ft/ft, and well pair MW-16/MW-16A had a positive vertical gradient of 0.019 ft/ft. This finding indicates that ground water at the NC DOT site has an upward flow component which is in accordance with the conceptual model of topographically lower areas being ground water discharge points.

The water table is below the bedrock surface on top of the ridge at the Girmes site and in the vicinity of wells MW-12 and MW-17 at the NC DOT facility. The water table varies from 3 feet below bedrock to about 3 feet above bedrock at the southwest property line and at the northeast property line the water table is about 15 feet above bedrock.

2.3.2 Hydraulic Conductivity

A single well response test (slug test) was performed on each monitoring well during the CSA for the purpose of identifying differences in hydraulic conductivity across the site. In addition, hydraulic conductivity measurements were obtained during the field screening surveys from Hydrocone® sample locations. A summary of hydraulic conductivity values from each monitoring well and Hydrocone® sample location is shown in Tables 2-1 and 2-2, respectively.

TABLE 2-1
SUMMARY OF HYDRAULIC CONDUCTIVITY MEASUREMENTS
MONITORING WELLS

WELL	AQUIFER	CM/SEC	FT/SEC
NC DOT/GIRMES			
MW-20	Fill/Alluvium	$1x10^{-5}$	$5x10^{-7}$
MW-1	Upper Saprolite	$4x10^{-4}$	$1x10^{-5}$
MW-2	Upper Saprolite	$2x10^{-4}$	$6x10^{-6}$
MW-6	Upper Saprolite	$2x10^{-4}$	$8x10^{-6}$
MW-7	Upper Saprolite	$2x10^{-4}$	$8x10^{-6}$
MW-8	Upper Saprolite	$4x10^{-4}$	$1x10^{-5}$
MW-9	Upper Saprolite	$3x10^{-5}$	$1x10^{-6}$
MW-15	Upper Saprolite	$7x10^{-4}$	$2x10^{-5}$
MW-16	Upper Saprolite	$1x10^{-3}$	$3x10^{-5}$
MW-10	Lower Saprolite	$2x10^{-5}$	$8x10^{-7}$
MW-13	Lower Saprolite	$4x10^{-3}$	$1x10^{-4}$
MW-15A	Lower Saprolite	$2x10^{-5}$	$8x10^{-7}$
MW-16A	Lower Saprolite	$9x10^{-4}$	$3x10^{-5}$
MW-4	Bedrock	$8x10^{-6}$	$3x10^{-7}$
MW-5	Bedrock	$6x10^{-5}$	$2x10^{-6}$
MW-11	Bedrock	$1x10^{-5}$	$4x10^{-7}$
MW-12	Bedrock	$5x10^{-5}$	$2x10^{-6}$
MW-14	Bedrock	$1x10^{-4}$	$4x10^{-6}$
MW-17	Bedrock	$1x10^{-4}$	$3x10^{-6}$
DOTSON/GIRMES			
MW-25	Alluvium/Saprolite	$4x10^{-4}$	$1x10^{-5}$
MW-26	Alluvium/Saprolite	$5x10^{-4}$	$2x10^{-5}$
MW-18	Bedrock	$3x10^{-5}$	$1x10^{-6}$
MW-19	Bedrock	$8x10^{-5}$	$3x10^{-6}$
MW-21	Bedrock	$1x10^{-5}$	$3x10^{-6}$
MW-22	Bedrock	$4x10^{-4}$	$1x10^{-5}$
MW-23	Bedrock	$5x10^{-4}$	$2x10^{-5}$
MW-24	Bedrock	$8x10^{-5}$	$3x10^{-6}$
MW-27	Bedrock	$2x10^{-4}$	$8x10^{-6}$

TABLE 2-2
SUMMARY OF HYDRAULIC CONDUCTIVITY MEASUREMENTS
HYDROCONE® SAMPLE LOCATIONS

SAMPLE LOCATION	AQUIFER	CM/SEC	FT/SEC
NC DOT			
HC-1-19	Saprolite	$2x10^{-3}$	$1x10^{-4}$
HC-2-19	Saprolite	$5x10^{-4}$	$2x10^{-5}$
HC-3-9	Saprolite	$3x10^{-3}$	$1x10^{-4}$
HC-5-29	Saprolite	$2x10^{-4}$	$7x10^{-6}$
HC-6-24	Saprolite	$6x10^{-4}$	$2x10^{-5}$
HC-7-24	Saprolite	$2x10^{-3}$	$7x10^{-6}$
HC-8-24	Saprolite	$7x10^{-5}$	$7x10^{-6}$
DOTSON			
HC-10-15	Alluvium/Saprolite	$4x10^{-5}$	$1x10^{-6}$
HC-11-16	Alluvium/Saprolite	$1x10^{-4}$	$3x10^{-6}$
HC-12-12.5	Alluvium/Saprolite	$3x10^{-4}$	$1x10^{-5}$
HC-14-12.5	Alluvium/Saprolite	$7x10^{-5}$	$2x10^{-6}$
HC-15-13	Alluvium/Saprolite	$5x10^{-5}$	$2x10^{-6}$
HC-16-13	Alluvium/Saprolite	$5x10^{-5}$	$2x10^{-6}$
HC-17-13	Alluvium/Saprolite	$3x10^{-6}$	$1x10^{-7}$
HC-18-13	Alluvium/Saprolite	$6x10^{-5}$	$2x10^{-6}$

Monitoring well hydraulic conductivity (K) values were calculated using software developed by RMT. The software is based on the Bouwer and Rice Method (Bouwer and Rice, 1976; Bouwer, 1989). Hydrocone® K values are calculated by proprietary software developed by *In-Situ* Technology, Inc. The values of K for monitoring wells screened in saprolite and located on Girmes property range from 1×10^{-5} ft/sec to 8×10^{-7} ft/sec; the geometric mean is 4×10^{-6} ft/sec. Values of K for monitoring wells screened in bedrock and located on Girmes/DOT property range from 4×10^{-6} ft/sec to 3×10^{-7} ft/sec; the geometric mean is 1×10^{-6} ft/sec. Values of K for monitoring wells and Hydrocone® locations screened in saprolite, and located on NC DOT property, range from 1×10^{-4} ft/sec to 5×10^{-7} ft/sec. The geometric mean of both Hydrocone® locations and monitoring wells on NC DOT property is 2×10^{-5} ft/sec.

Values of K for monitoring wells and Hydrocone® locations screened in alluvium/saprolite and located on Dotson property ranged from 1×10^{-5} ft/sec to 1×10^{-7} ft/sec; the geometric mean is 3×10^{-5} ft/sec. Values of K for monitoring wells screened in bedrock on the southwest side of the Girmes site range from 1×10^{-5} ft/sec to 3×10^{-7} ft/sec; the geometric mean is 3×10^{-6} ft/sec. There are no monitoring wells screened in saprolite on the southwest side of the Girmes site. Values of K calculated for bedrock monitoring wells on the southwest side of the site are generally higher than those on top of the ridge and those which are located on the northeast side of the site. The competent rocks which make up the core of the ridge have not been as weathered by mechanical and chemical processes as the rocks located at the base of the ridge on the southwest side of the site. Thus, the bedrock on the southwest side is more conductive. Hydraulic conductivity test results are included in Appendix G of the CSA.

In June 1995, following completion of the CSA, two test recovery wells were installed at the Girmes facility to assess hydraulic characteristics of the bedrock. Well locations are shown on Plate 1. One well, RW-1, was installed on the southwest side of the site near the property line. The second well, RW-2, was installed on the northeast side of the site near the NC DOT property line. Both wells were constructed with a surface casing extending to the top of bedrock and are completed as open-hole within bedrock. Well construction diagrams and boring logs for these wells are presented in Appendix A.

Aquifer pumping tests were conducted on wells RW-1 and RW-2 at the site to measure the aquifer response to pumping and assess the hydraulic properties of the bedrock aquifer. Water level measurements collected during the pumping and recovery phases of each aquifer test were used to generate time versus drawdown graphs for each test. Curve-matching techniques were used to calculate aquifer transmissivity values using test data for which the drawdown and type curves could be matched. The Theis solution, with drawdowns corrected for unconfined conditions, and the Neuman

unconfined aquifer solution were used to analyze the pumping test data using the AQTESOLV program (Geraghty & Miller, 1995).

The pumping test at well RW-1 lasted approximately 41 hours, with the well pumped at an average rate of 3.2 gallons per minute (gpm). Drawdowns in observation wells monitored during the test ranged from 0.21 feet in monitoring well MW-19 located 491 feet from the pumping well, to 6.9 feet in monitoring well MW-21 located 30 feet from the pumping well. Maximum drawdown observed in the pumping well was 11.9 feet. Calculated transmissivity values ranged from 22 to 30 $feet^2$/day. Test results are summarized in Table 2-3.

The pumping test at well RW-2 lasted approximately 48 hours, with the well pumped at an average rate of 0.5 gpm. Drawdowns in observation wells ranged from 0.13 feet in monitoring well MW-5 located 179 feet from the pumping well, to 1.33 feet in monitoring well MW-9 located 33 feet from the pumping well. Maximum drawdown observed in well RW-2 during the test was 19.8 feet. Calculated transmissivity values ranged from 18 to 20 $feet^2$/day. Test results are also summarized in Table 2-3.

Ground water modeling was conducted to calculate theoretical capture zones for the proposed ground water extraction wells at the Girmes site. The GPTRAC module of the US EPA Wellhead Protection Area delineation program (WHPA) was used for the capture zone analysis. GPTRAC is a semi-analytical model which provides for pathline and time-related capture zone delineation using analytical velocity computation techniques.

The GPTRAC program assumes that pumping wells fully penetrate a homogeneous aquifer under a steady-state flow field. Aquifer characteristics are assumed to be uniform throughout the model area. Thus, variations in aquifer hydraulic conductivity, thickness, hydraulic gradient, and recharge are not represented in the model. Ground water flow through the aquifer is assumed to be two-dimensional in an areal x-y plane. The aquifer can be confined, semi-confined, or unconfined. The effects of well interference are accounted for through superposition of solutions resulting from pumping of individual wells.

2.3.3 Rate of Ground Water Flow

The seepage velocity of ground water (rate of ground water flow) was calculated for each area of the Site. An average hydraulic gradient was determined from the water table contour lines shown on Plate 5. The effective porosity of saprolite and bedrock was estimated to be 30 percent and 10 percent, respectively (Freeze and Cherry, 1979). The geometric mean of the hydraulic conductivity for the appropriate medium

TABLE 2-3
SUMMARY OF AQUIFER PUMPING TEST RESULTS

RW-1

Start Pumping:	06/26/95	18:04:59
End Pumping	06/28/95	13:00:42
Length of Pumping Phase:	2475 Minutes	
Pumping Rate:	3.2 gallons per minute	

OBSERVATION WELL NUMBER	DISTANCE FROM RW-1 (feet)	MAXIMUM OBSERVED DRAWDOWN	GEOLOGY OF SCREENED ZONE	AQUIFER TRANSMISSIVITY ($feet^2$/day) BASED ON CURVE-MATCHING TECHNIQUES
MW-21	30	6.9	Bedrock	24
MW-18	88	4.31	Bedrock	30
MW-23	104	0.54	Bedrock	22
MW-26	207	0.21	Alluvium/ Saprolite	No match possible
MW-24	312	0.58	Bedrock	No match possible
MW-14	350	0.13	Bedrock	No match possible
MW-19	491	0.21	Bedrock	No match possible
MW-5	707	None	Bedrock	No match possible

RW-2

Start Pumping:	06/29/95	12:00:38
End Pumping	07/01/95	11:59:00
Length of Pumping Phase:	2879 Minutes	
Pumping Rate:	0.5 gallons per minute	

OBSERVATION WELL NUMBER	DISTANCE FROM RW-1 (feet)	MAXIMUM OBSERVED DRAWDOWN	GEOLOGY OF SCREENED ZONE	AQUIFER TRANSMISSIVITY ($feet^2$/day) BASED ON CURVE-MATCHING TECHNIQUES
MW-9	33	1.329	Upper Saprolite	20
MW-10	66	0.46	Lower Saprolite	18
MW-4	143	None	Bedrock	No match possible
MW-5	179	0.13	Bedrock	20
MW-8	132	None	Upper Saprolite	No match possible
MW-7	192	None	Upper Saprolite	No match possible
MW-2	227	None	Upper Saprolite	No match possible

(saprolite or bedrock) was also used in each calculation. Calculations are shown in Appendix H of the CSA.

Seepage velocities of ground water in saprolite soils on the northeast side of the Girmes site range from 31 ft/yr on the Girmes site to a high of 145 ft/yr on the northwest portion of the NC DOT property. The higher velocity on the NC DOT property is due primarily to the more conductive soils found there. The seepage velocity in bedrock on the northeast side of the Girmes site is 23 ft/yr.

On the southwest side of the Girmes site, the average seepage velocity of ground water in bedrock was calculated to be 79 ft/yr. The higher seepage velocity observed on this side of the site may be due to a higher degree of fracturing in the bedrock, and/or the presence of a different rock unit (mica schist) which may be more conductive.

2.4 Ground Water Quality

Ground water quality information has been obtained from 16 *in-situ* ground water samples employing the Hydrocone® system; 28 monitoring wells installed on Girmes, NC DOT, and Dotson property during the CSA; and two monitoring wells (MW-2 and MW-2A) and two test recovery wells (RW-1 and RW-2), installed in June 1995, after the CSA. During the CSA, ground water data were collected during four phases of work. These phases are described in detail in Section 5 of the CSA and are summarized below.

2.4.1 CSA Investigation

Phase 1 Ground Water Field Screening - NC DOT Property

During the period of August 16-24, 1993, *in situ* ground water samples were collected on NC DOT property downgradient of the Girmes site to assess the lateral extent of VOCs in ground water. The *in-situ* ground water samples were collected either at specific intervals or at point of tool refusal at eight locations (HC-1, HC-2, HC-3, HC-5, HC-6, HC-7, HC-8, HC-9). Additional ground water samples were collected just below the water table at two locations (HC-2 and HC-3) to assess shallow ground water quality. Ground water samples were analyzed in the field for trichloroethene and 1,2-dichloroethene using a portable gas chromatograph. Select samples were also analyzed in the laboratory for trichloroethene, 1,2-dichloroethene, and vinyl chloride.

Trichloroethene and 1,2-dichloroethene were detected in some of the ground water samples collected at concentrations above the North Carolina 2L standards. As a result of the Phase 1 investigation, the extent of the VOC plume to the northeast and north was initially defined. The downgradient extent of the plume was not defined due to

subsurface obstructions encountered at locations in the northwest area of the NC DOT facility.

Phase 2 Ground Water Quality Results

As part of the Phase 2 ground water investigation, nine ground water monitoring wells were installed. Well locations are shown on Plate 1. Seven wells, MW-12, 13, 15, 15A, 16, 16A, and 17, were installed on NC DOT property to confirm the northeast extent of the plume and to determine the extent of the plume downgradient to the northwest. In addition, one well, MW-11, was installed at the Girmes site to assess the northwest edge of the plume on the ridge, and one well, MW-14, was installed on the southwest side of the Girmes site to assess general ground water quality on that side of the facility.

Ground water samples were collected from all 18 monitoring wells during November 1993. Trichloroethene and 1,2-dichloroethene were the primary constituents detected in ground water. These results of the Phase 2 investigation confirmed the findings of the Phase 1 field screening. The extent of the plume on the east and northeast of the site were defined as extending from the Girmes site to the northwest following the general direction of ground water flow. The highest concentrations of trichloroethene were detected in ground water samples obtained from bedrock well MW-5 and saprolite well MW-9, located adjacent to and downgradient of the area where waste debris may have been disposed of. Trichloroethene concentrations decrease with distance from the Girmes site.

During this phase, the ground water sample obtained from bedrock monitoring well MW-14, located on the southwest side of the Girmes facility, had a trichloroethene concentration of 0.52 mg/L. No other VOCs were detected.

Phase 3 Ground Water Investigation - Southwest Side Girmes Facility

Based on the analytical results obtained from well MW-14 during the Phase 2 investigation, additional areas located on Girmes property along Gashes Creek were identified for further evaluation. As part of this investigation, four monitoring wells, MW-18, MW-19, MW-21, and MW-22, were installed to determine the extent of the plume along Gashes Creek. A fifth well, MW-20, was installed to determine the downgradient extent of the plume identified on NC DOT property. Well locations are shown on Plate 1.

On April 20, 1994, ground water samples were collected from the five new wells. Samples were analyzed for trichloroethene, 1,2-dichloroethene, and vinyl chloride. In addition, samples of surface water from Gashes Creek (SW-1 to SW-4), an unnamed

intermittent tributary (SW-5), and a ground water seep (SW-6) on Girmes property were also collected and analyzed for VOCs.

VOCs were not detected in MW-20, so the extent of the plume on the DOT property has been defined. VOCs were also not detected in well MW-22 located on the northwest end of the Girmes facility.

VOCs were detected in MW-18, MW-19, MW-21, and at SW-4. These analytical results indicated that ground water is affected by VOCs on the southwest side of the Girmes facility and extends to Gashes Creek.

Phase 4 Ground Water Investigation - Dotson Property

During July 1994, *in-situ* ground water samples were collected on Dotson property to assess quality on the southwest side of Gashes Creek. The *in-situ* ground water samples were collected at the point of tool refusal at eight locations (HC-10, HC-12, HC-13, HC-14, HC-15, HC-16, HC-17, and HC-18). Sample locations are shown on Plate 1. Based on field screening results, three monitoring wells were installed to confirm the extent of affected ground water on the Dotson property. MW-23 was located to evaluate the vertical extent of affected ground water observed at HC-10. MW-25 and MW-26 were located to document the lateral extent of affected ground water on Dotson property. In addition, two wells, MW-24 and MW-27, were installed on the Girmes side of Gashes Creek to assess the southeast extent of affected ground water on the Girmes site. Ground water samples were collected from the five newly installed wells (MW-23 to MW-27), and the Dotson unused production well #1 on August 18, 1994. Wells MW-18, MW-19, and MW-21, and surface water sampling stations SW-1 through SW-4 were also sampled at this time to confirm previous results. Samples were analyzed for trichloroethene, 1,2-dichloroethene, and vinyl chloride. Ground water samples obtained from MW-23, MW-24, MW-26, and the Dotson unused production well #1 contained trichloroethene in excess of the NC limit of 0.0028 mg/L. The ground water sample from the Dotson unused production well #1 showed concentrations of 1,2-dichloroethene and vinyl chloride in excess of the NC limit of 0.07 and 0.000015 mg/L, respectively. Ground water samples obtained from MW-19 and MW-21 showed concentrations of trichloroethene above the NC limit. The surface water samples from stations SW-2, SW-3, and SW-4 contained low concentrations of trichloroethene below the NC limit of 0.0924 mg/L. SW-1 did not show any concentrations of VOCs.

On the basis of these results, a second round of ground water samples was collected from selected monitoring wells (MW-19, MW-23, and MW-24) and Dotson's unused production well #1 to verify the earlier results.

As a result of the Phase 4 investigation, the lateral extent of affected ground water on the southwest side of the Girmes site has been defined. Gashes Creek serves as the discharge point for affected ground water flowing downhill from the ridge above.

Ground water with elevated concentrations of trichloroethene and 1,2-dichloroethene has also been found on Dotson property across Gashes Creek from the Girmes site. The highest concentrations of trichloroethene on the southwest side of the site were found in this area and may be the result of operations at Dotson's facility.

2.4.2 Post CSA Investigations

Following the submittal of the CSA, additional investigation activities have been conducted to provide data necessary for the preparation of the CAP. These activities include the following: the installation of two ground water monitoring wells downgradient of the plume previously identified on the Dotson property; installation of two test recovery wells on the northeast and southwest sides of the Girmes property; the collection of two rounds of ground water samples from the monitoring and test recovery wells.

The two monitoring wells, MW-28 and MW-28A, were installed in June 1995 at the entrance road to the NC DOT facility. Well locations are shown on Plate 1. These wells were installed as a nest to assess ground water quality in flood plain deposits and the underlying bedrock downgradient of the plume on the Dotson property. The wells were drilled using hollow stem augers. The bedrock portion of well MW-28A was drilled using air rotary methods. Boring logs and well construction diagrams for these wells are presented in Appendix A. Test recovery wells RW-1 and RW-2 discussed in Section 2.3.4, were also installed in June 1995.

Ground water samples were collected from all 29 monitoring wells in June 1995 (note: well MW-25 was damaged in 1994, and has been abandoned). In addition, test recovery wells RW-1 and RW-2 were sampled at the beginning and at the end of pumping test conducted in June 1995. The monitoring and test recovery wells were sampled again in January/February 1996. Ground water samples were analyzed for trichloroethene, 1,2-dichloroethene, and vinyl chloride. In addition, wells on the northeast side of the Girmes site and test recovery wells RW-1 and RW-2 were analyzed for select parameters, hardness, alkalinity, total and dissolved iron, total and dissolved manganese, and total suspended solids. Analytical results are summarized in Tables 2-4 through 2-9. Laboratory reports are presented in Appendix B. Trichloroethene and 1,2-dichloroethene concentrations over time are summarized in Tables 2-10 and 2-11. Analytical results for VOCs for the January/February 1996 sampling event, along with the approximate boundary of the plume, are presented on Plate 6.

TABLE 2-4
SUMMARY OF VOLATILE ORGANICS ANALYSES [a]
JUNE 1995

LOCATION	SAMPLE DATE	COMPOUND		
		TRICHLOROETHENE	1,2-DICHLOROETHENE, (TOTAL)	VINYL CHLORIDE
NC 2L Standard		0.0028	0.070	0.000015
MW-1	6/21/95	<0.001	<0.002	<0.001
MW-2	6/23/95	0.058 D	0.012	<0.001
MW-4	6/22/95	0.95 D	0.67 D	<0.001
MW-5	6/22/95	5.8 D	0.085 E	<0.001
MW-6	6/21/95	<0.001	<0.002	<0.001
MW-7	6/23/95	<0.001	<0.002	<0.001
MW-8	6/22/95	<0.001	<0.002	<0.001
MW-9	6/22/95	1.8 D	0.045 E	<0.001
MW-10	6/22/95	0.042 E	0.60 D	<0.001
MW-11	6/22/95	0.0016	<0.002	<0.001
MW-12	6/21/95	<0.001	<0.002	<0.001
MW-13	6/21/95	<0.001	0.003	0.024
MW-14	6/23/95	0.080 D	<0.002	<0.001
MW-15	6/21/95	<0.001	<0.002	<0.001
MW-15A	6/22/95	0.0026	<0.002	<0.001
MW-15A (DUP-02)	6/22/95	0.0024	<0.002	<0.001
MW-16	6/21/95	0.0012	<0.002	<0.001
MW-16A	6/22/95	<0.001	<0.002	<0.001
MW-17	6/21/95	0.0039	<0.002	<0.001
MW-18	6/20/95	<0.001	0.0026	<0.001
MW-18 (DUP-01)	6/20/95	<0.001	0.0029	<0.001
MW-19	6/23/95	0.11 D	0.0085	<0.001
MW-20	6/21/95	<0.001	0.0029	<0.001
MW-21	6/20/95	0.35 D	0.25 D	0.0025
MW-22	6/23/95	<0.001	<0.002	<0.001
MW-23	6/20/95	11.0 D	0.38	<0.050
MW-24	6/20/95	0.22 D	0.003	<0.001
MW-26	6/20/95	0.0091	0.0098	<0.001
MW-27	6/20/95	<0.001	<0.002	<0.001
MW-28	6/23/95	<0.001	<0.002	<0.001
MW-28A	6/23/95	0.054 D	0.0073	<0.001
RW-01 [b]	6/20/95	9.9 D	0.56	<0.050
RW-01 [c]	6/28/95	0.91	0.24	<0.10
RW-02 [b]	6/23/95	0.52 D	0.023	<0.001
RW-02 [c]	6/30/95	0.73	<0.040	<0.020

[a] Analytical results are reported in parts per million unless otherwise noted.
[b] Sample collected prior to pump test.
[c] Sample collected at end of pump test.
D, DL Results from diluted sample.
E Concentration exceeds instrument calibration range.
< Concentration less than the Quantitation Limit or not validated if accompanied by "u" qualifier.

TABLE 2-5
SUMMARY OF INORGANICS ANALYSES[a]
JUNE 1995

LOCATION	DATE	COMPOUND						
		IRON total	IRON dissolved	MANGANESE total	MANGANESE dissolved	ALKALINITY as CaC03	SOLIDS total suspended	pH laboratory (s.u.)
MW-1	6/22/95	0.68	<0.10	0.013	<0.005	NA	11	NA
MW-2	6/23/95	<0.10	<0.10	0.0074	0.0062	NA	<10	NA
MW-4	6/22/95	2.5	<0.10	0.081	0.058	NA	140	NA
MW-5	6/22/95	10	<0.10	0.21	0.023	NA	290	NA
MW-6	6/22/95	10	<0.10	0.44	0.013	NA	310	NA
MW-7	6/23/95	1.4	<0.10	0.06	0.032	NA	15	NA
MW-8	6/23/95	0.14	<0.10	<0.005	<0.005	NA	11	NA
MW-9	6/23/95	1	<0.10	0.098	0.1 DA	NA	15	NA
MW-10	6/23/95	1.4	<0.10	0.035	0.022	NA	12	NA
MW-11	6/22/95	6.4	<0.10	0.21	0.038	NA	190	NA
MW-12	6/21/95	0.4	<0.1	0.11	0.099	NA	<10	NA
MW-13	6/21/95	34	35	14	13	NA	35	NA
MW-15	6/21/95	0.14	0.12	2.1	2.3	NA	<10	NA
MW-15A	6/22/95	3.6	0.92	4.3	4.5 DA	NA	45	NA
MW-15A (DUP-02)	6/22/95	0.92	4.2	4.5	NA	NA	38	NA
MW-16	6/21/95	1.6	0.8	0.16	0.16	NA	15	NA
MW-16A	6/22/95	3.1	0.78	0.45	0.055 DA	NA	22	NA
MW-17	6/21/95	<0.10	<0.1	<0.005	<0.005	NA	<10	NA
MW-20	6/21/95	24	25	2.4	2.6	NA	23	NA
RW-01[c]	6/28/95	<0.10	<0.10	0.009	0.006	150	14	7.0 H
RW-02 [b]	6/23/95	0.46	<0.10	0.052	<0.051	NA	<10	NA
RW-02 [c]	6/30/95	<0.10	<0.10	0.0055	<0.005	120	<10 H	6.6 H

[a] - Analytical results are reported in parts per million unless otherwise noted.

[b] - Sample collected prior to pump test.

[c] - Sample collected at end of pump test.

DA - Dissolved analyte greater than total analyte; analyses passed QC based on precision criteria.

NA - Not analyzed.

H - Analysis performed "n" days past holding time.

< - Concentration less than the Quantitation Limit or not validated if accompanied by "u" qualifier.

NA - Not analyzed.

G:\DATA\HYDRO\70144\LOTUS\INORGTBL.XLS

TABLE 2-6
SUMMARY OF GASES IN WATER ANALYSES [a]
JUNE 1995

LOCATION	DATE	COMPOUND		
		METHANE	ETHANE	ETHENE
MW-1	6/21/95	<0.0032	<0.0058	<0.0064
MW-2	6/23/95	<0.0033	<0.006	<0.0066
MW-4	6/22/95	0.0189	<0.0058	<0.0064
MW-5	6/22/95	<0.0034	<0.0061	<0.0068
MW-6	6/21/95	<0.0033	<0.0059	<0.0065
MW-7	6/23/95	<0.0032	<0.0058	<0.0064
MW-8	6/22/95	<0.0031	<0.0056	<0.0063
MW-9	6/22/95	<0.0032	<0.0058	<0.0065
MW-10	6/22/95	<0.0032	<0.0058	<0.0064
MW-11	6/22/95	<0.0033	<0.0059	<0.0066
MW-12	6/21/95	<0.0033	<0.0059	<0.0065
MW-13	6/21/95	0.1949	<0.0058	<0.0064
MW-15	6/21/95	0.0041	<0.006	<0.0066
MW-15A	6/22/95	<0.0033	<0.0059	<0.0065
MW-15A (DUP-02)	6/22/95	<0.0024	<0.006	<0.0067
MW-16	6/21/95	<0.0031	<0.0057	<0.0064
MW-16A	6/22/95	<0.0031	<0.0057	<0.0063
MW-17	6/21/95	<0.0034	<0.006	<0.0066
MW-20	6/21/95	0.0652	<0.0057	<0.0063
RW-01	6/20/95	0.0024	<0.0057	<0.0063
RW-02	6/23/95	0.0099	<0.0055	<0.0062
RW-02	6/30/95	<0.003	<0.0056	<0.0061

[a] Analytical results are reported in parts per million unless otherwise noted.
< Concentration less than the Quantitation Limit or not validated if accompanied by "u" qualifier.

TABLE 2-7
SUMMARY OF VOLATILE ORGANICS ANALYSES [a]
JANUARY/FEBRUARY 1996

LOCATION	SAMPLE DATE	COMPOUND		
		TRICHLOROETHENE	1,2-DICHLOROETHENE, (TOTAL)	VINYL CHLORIDE
NC 2L Standard		0.0028	0.070	0.000015
MW-1	1/30/96	<0.001	<0.002	<0.001
MW-2	1/31/96	0.088	<0.010	<0.005
MW-4	1/31/96	0.74	0.36	<0.10
MW-5	2/2/96	5.2	<0.40	<0.20
MW-6	1/31/96	<0.001	<0.002	<0.001
MW-7	1/31/96	<0.001	<0.002	<0.001
MW-8	1/31/96	<0.001	<0.002	<0.001
MW-9	1/31/96	2.7	<0.20	<0.10
MW-10	1/31/96	<0.10	0.38	<0.10
MW-11	2/2/96	<0.001	<0.002	<0.001
MW-12	1/30/96	<0.001	<0.002	<0.001
MW-13	1/30/96	<0.001	<0.002	0.0048
MW-14	2/1/96	0.08	<0.010	<0.005
MW-15	1/30/96	<0.001	<0.002	<0.001
MW-15A	1/30/96	<0.001	<0.002	<0.001
MW-16	1/30/96	<0.001	<0.002	<0.001
MW-16A	1/30/96	<0.001	<0.002	<0.001
MW-16A (DUP 01)	1/31/96	<0.001	<0.002	<0.001
MW-17	1/30/96	<0.001	<0.002	<0.001
MW-18	2/1/96	0.001	<0.002	<0.001
MW-19	2/2/96	0.028	<0.002	<0.001
MW-19 (DUP 02)	2/2/96	0.028	<0.002	<0.001
MW-20	1/30/96	<0.001	<0.002	<0.001
MW-21	2/1/96	0.32	0.2	<0.010
MW-22	2/2/96	<0.001	<0.002	<0.001
MW-23	1/30/96	14	<1.0	<0.50
MW-24	2/1/96	0.23	<0.020	<0.010
MW-26	1/30/96	0.0014	0.0078	<0.001
MW-27	2/1/96	<0.001	<0.002	<0.001
MW-28	2/1/96	<0.001	<0.002	<0.001
MW-28A	2/1/96	0.14	0.018	<0.005
RW-01	2/1/96	0.26	0.08	<0.020
RW-02	1/31/96	0.88	<0.040	<0.020

[a] Analytical results are reported in parts per million unless otherwise noted.
< Concentrations less than the Quantitation Limit or not validated if accompanied by "u" qualifier.

TABLE 2-8

SUMMARY OF INORGANICS ANALYSES[a]
JANUARY/FEBRUARY 1996

LOCATION	DATE	COMPOUND				
		IRON total	IRON dissolved	MANGANESE total	MANGANESE dissolved	SOLIDS total suspended
MW-1	1/30/96	120	0.32	1.3	0.011	1300
MW-2	1/31/96	27	<0.10	0.083	0.011	24
MW-4	1/31/96	4.3	<0.10	0.072	0.033	120
MW-5	2/2/96	7.8	<0.1	0.12	0.011	100
MW-6	1/31/96	24	0.2	0.81	0.011	410
MW-7	1/31/96	28	<0.10	0.47	0.041	230
MW-8	1/31/96	0.9	<0.10	0.02	<0.005	48
MW-9	1/31/96	2.1	0.21	0.12	0.12	25
MW-10	1/31/96	9.6	<0.10	0.074	0.0089	110
MW-11	2/2/96	5.5	<0.1	0.14	<0.005	250
MW-15	1/30/96	1.3	<0.10	0.81	0.860DA	34
MW-15A	1/30/96	12	2.1	4.8	7.6	180
MW-16	1/30/96	5.9	1.6	0.18	0.18	43
MW-16A	1/30/96	2.3	0.31	0.058	0.049	30
MW-16A (DUP 01)	1/31/96	2.7	0.33	0.063	0.05	26
MW-20	1/30/96	30	27	15	17DA	51
RW-02	1/31/96	8.2	0.38	0.21	0.19	19

[a] - Analytical results are reported in parts per million unless otherwise noted.

DA - Dissolved analyte greater than total analyte; analyses passed QC based on precision criteria.

< - Concentration less than the Quantitation Limit or not validated if accompanied by "u" qualifier.

G:\DATA\HYDRO\70144\LOTUS\INORGTAB.XLS

TABLE 2-9
SUMMARY OF GASES IN WATER ANALYSES [a]
JANUARY/FEBRUARY 1996

LOCATION	DATE	COMPOUND		
		METHANE	ETHANE	ETHENE
MW-1	1/30/96	0.0105	<0.006	<0.0063
MW-2	1/31/96	0.01	<0.006	<0.0063
MW-4	1/31/96	0.0159	<0.006	<0.0063
MW-5	2/2/96	0.0163	<0.006	<0.0063
MW-6	1/31/96	0.0146	<0.006	<0.0063
MW-7	1/31/96	0.0191	<0.006	<0.0063
MW-8	1/31/96	0.011	<0.006	<0.0063
MW-9	1/31/96	0.0132	<0.006	<0.0063
MW-10	1/31/96	0.012	<0.006	<0.0063
MW-11	2/2/96	0.0107	<0.006	<0.0063
MW-12	1/30/96	0.014	0.0084	<0.0063
MW-13	1/30/96	1.101	0.0099	<0.0063
MW-15	1/30/96	0.0194	<0.006	<0.0063
MW-15A	1/30/96	0.0232	<0.006	<0.0063
MW-16	1/30/96	0.014	<0.006	<0.0063
MW-16A	1/30/96	0.0087	<0.006	<0.0063
MW-16A (DUP 01)	1/31/96	0.011	<0.006	<0.0063
MW-17	1/30/96	0.0107	0.0073	<0.0063
MW-20	1/30/96	0.846	0.0132	<0.0063
RW-02	1/31/96	1.18	<0.006	<0.0063

[a] Analytical results are reported in parts per million unless otherwise noted.
< Concentration less than the Quantitation Limit or not validated if accompanied by "u" qualifier.

TABLE 2-10
SUMMARY OF TRICHLOROETHENE CONCENTRATIONS DETECTED IN GROUND WATER

WELL	SAMPLING DATE					
	NOV-93	APR-94	AUG-94	SEP-94	JUN-95	JAN/FEB-96
MW-1	ND	NA	NA	NA	ND	ND
MW-2	0.11	NA	NA	NA	0.058D	0.088
MW-4	1.5	NA	NA	NA	0.95D	0.74
MW-5	6.4	NA	NA	NA	5.8D	5.2
MW-6	ND	NA	NA	NA	ND	ND
MW-7	0.014	NA	NA	NA	ND	ND
MW-8	ND	NA	NA	NA	ND	ND
MW-9	3.0	NA	NA	NA	1.8D	2.7
MW-10	0.22	NA	NA	NA	0.042E	ND
MW-11	ND	NA	NA	NA	0.0016	ND
MW-12	ND	NA	NA	NA	ND	ND
MW-13	ND	NA	NA	NA	ND	ND
MW-14	0.52	NA	NA	NA	0.080D	0.08
MW-15	ND	NA	NA	NA	ND	ND
MW-15A	ND	NA	NA	NA	0.0026	ND
MW-16	ND	NA	NA	NA	0.0012	ND
MW-16A	ND	NA	NA	NA	ND	ND
MW-17	0.0075 (0.0076) *	NA	NA	NA	0.0039	ND
MW-18		0.0033	0.0017	NA	ND	0.001
MW-19		0.0037	0.18	0.04	0.11D	0.028
MW-20		ND	NA	NA	ND	ND
MW-21		0.49	0.49	NA	0.35D	0.32
MW-22		ND	NA	NA	ND	ND
MW-23			3.5	5.7	11.0D	14.0
MW-24			2.2	0.2	0.22D	0.23
MW-25			ND	NA	ABAND.	ABAND.
MW-26			0.017	NA	0.0091	0.0014
MW-27			ND	NA	ND	ND
MW-28					ND	ND
MW-28A					0.054D	0.14
RW-1					9.9/0.91**	0.26
RW-2					0.52/0.72**	0.88

ND None detected
NA Not analyzed
Concentration are in mg/l
* Analytical results for duplicate samples shown in parentheses.
** Analytical results for samples collected at the beginning/end of pumping tests.

TABLE 2-11
SUMMARY OF 1,2-DICHLOROETHENE CONCENTRATIONS DETECTED IN GROUND WATER

WELL	SAMPLING DATE					
	NOV-93	APR-94	AUG-94	SEP-94	JUN-95	JAN/FEB-96
MW-1	ND	NA	NA	NA	ND	ND
MW-2	0.025	NA	NA	NA	0.012	ND
MW-4	0.74	NA	NA	NA	0.67D	0.36
MW-5	ND	NA	NA	NA	0.085E	ND
MW-6	ND	NA	NA	NA	ND	ND
MW-7	0.0038	NA	NA	NA	ND	ND
MW-8	ND	NA	NA	NA	ND	ND
MW-9	ND	NA	NA	NA	0.045E	ND
MW-10	1.2	NA	NA	NA	0.60D	0.38
MW-11	ND	NA	NA	NA	ND	ND
MW-12	ND	NA	NA	NA	ND	ND
MW-13	ND	NA	NA	NA	0.003	ND
MW-14	ND	NA	NA	NA	ND	ND
MW-15	ND	NA	NA	NA	ND	ND
MW-15A	ND	NA	NA	NA	ND	ND
MW-16	ND	NA	NA	NA	ND	ND
MW-16A	ND	NA	NA	NA	ND	ND
MW-17	ND (ND)*	NA	NA	NA	ND	ND
MW-18		0.0086	0.0036	NA	0.0026	ND
MW-19		ND	ND	0.019	0.0085	ND
MW-20		ND	NA	NA	0.0029	ND
MW-21		0.13	0.14	NA	0.25D	0.2
MW-22		ND	NA	NA	ND	ND
MW-23			ND	ND	0.38	ND
MW-24			ND	ND	0.003	ND
MW-25			ND	NA	ABAND.	ABAND.
MW-26			0.0085	NA	0.0098	0.0078
MW-27			ND	NA	ND	ND
MW-28					ND	ND
MW-28A					0.0073	0.018
RW-1					0.56/0.24**	0.08
RW-2					0.023/ND**	ND

ND None detected
NA Not analyzed
Concentrations are in mg/L
* Analytical results for duplicate samples shown in parentheses.
** Analytical results for samples collected at the beginning/end of pumping tests.

2.4.3 Northeast Plume Definition

The configuration of the plume on the northeast side of the site has changed since the CSA. Plate 7 presents a comparison of trichloroethene concentrations detected in the northeast plume during the CSA with concentrations detected in January/ February 1996. As illustrated in Plate 7 and Table 2-10, trichloroethene concentrations in wells MW-7, MW-10, and MW-17 have declined over time to nondetect during the January/ February 1996 sampling event. Trichloroethene concentrations in well MW-4 also declined. Wells MW-7 and MW-17 exhibited a decline in 1,2-dichloroethene concentrations to nondetect. Wells MW-4 and MW-10 also showed declines in 1,2-dichloroethene concentrations with time; however, the most recent concentrations in January/February 1996 (0.38 mg/L and 0.036 mg/L, respectively) still exceeded the 2L standard. During the June 1995 sampling event, trichloroethene was detected in wells MW-11, MW-15A, and MW-16 at concentrations below the 2L standards. Trichloroethene was not detected in these wells when sampled in January/February 1996, nor was it detected in these wells during the CSA in November 1993.

Vinyl chloride has been detected in one well, MW-13, on the northeast side of the site. Concentrations have declined from 0.029 mg/L in November 1993 to 0.0048 mg/L in January/February 1996. VOC concentrations in the remaining wells remained relatively stable since the CSA began.

The configuration of the plume on the northeast side of the site now appears to have separated into two parts. The main body of the plume consists of trichloroethene and 1,2-dichloroethene and has the same general appearance as the plume presented in the CSA except that it appears to terminate just upgradient of well MW-17. A small portion of the plume appears to be detached from the main body and is centered around well MW-13. This portion consists of vinyl chloride only.

Well MW-20, located approximately 200 feet down gradient of the plume at well MW 13, had no detections of trichloroethene and vinyl chloride. A trace of 1,2-dichloroethene (0.0029 mg/L) was detected in MW-20 in June 1995, well below the 2L standard. 1,2-Dichloroethene was not detected in MW-20 during the last sampling event in January/February 1996. Well MW-20 remains downgradient of the plume and is over 4 years ground water travel time upgradient of the nearest receptor, the Swannanoa River.

2.4.4 Southwest Plume Definition

The configuration of the plume on the southwest side of the Girmes property remains generally unchanged since the CSA was completed. When test recovery well RW-1 was

installed in June 1995, it contained trichloroethene at a concentration of 9.9 mg/L. 1,2 Dichloroethene was detected at a concentration of 0.56 mg/L. At the end of 41 hours of pumping during the pump test, also conducted in June 1995, the trichloroethene concentration had lowered to 0.91 mg/L. 1,2-Dichloroethene declined to a concentration of 0.24 mg/L. When sampled in January/February 1996, trichloroethene and 1,2-dichloroethene concentrations had declined even further to 0.26 mg/L and 0.08 mg/L, respectively. The plume on the southwest side of the Girmes property extends westward from the facility to Gashes creek where it discharges. Gashes creek is the receptor of the affected ground water. The plume is not expected to migrate beyond the creek.

2.4.5 Dotson Plume Definition

On the Dotson property, trichloroethene concentrations declined in well MW-26 from the one analysis conducted during the CSA. Trichloroethene concentrations are now below the 2L standards. Trichloroethene concentrations continued to rise in bedrock well MW-23. When first sampled in August 1994, well MW-23 had a trichloroethene concentration of 3.5 mg/L. This concentration increased to 5.7 mg/L in September 1994. Since the CSA, concentrations continued to climb to 11.0 mg/L in June 1995 and 14.0 mg/L in January/February 1996. These concentrations are the highest detected in any of the monitoring wells. The steadily increasing concentrations indicate that there may be the remnants of a source area in the immediate vicinity of well MW-23. Well MW-23 may have intercepted the remnant source, possibly contained in small fractures, during drilling.

There are reports that Dotson had used trichloroethene in the past. With the highest trichloroethene concentrations consistently found in this well, it is not likely that the source of VOCs found on the Dotson side of Gashes creek originated on the Girmes property. Well MW-23 is the only well on the southwest side of the Girmes facility or on the Dotson property to demonstrate increases in trichloroethene concentrations. The other wells either maintained generally consistent concentrations, remained at non-detect, or displayed a decrease in concentrations.

Additionally, well MW-23 is at the same location that *in-situ* ground water sample HC-10 was collected during Phase 4 of the CSA. This sample had the highest trichloroethene concentration (1.3 mg/L) found in the unconsolidated soils on the Dotson property. Other *in-situ* ground water samples collected in the areas surrounding HC-10 all had lower trichloroethene concentrations, further indicating that there may have been a source in the immediate vicinity of HC-10 and well MW-23. The VOC plume on the Dotson side of Gashes creek is considered to be a separate plume, unrelated to the plume found on the Girmes side of the creek.

Since the CSA, two additional monitoring wells, MW-28 and MW-28A, were installed on the southwest side of Gashes creek, downgradient of the plume on the Dotson property. These wells were sampled in June 1995 and January/February 1996. No VOCs were detected in well MW-28, screened in the entire saturated portion of the soils (flood plain deposits) overlying bedrock. Bedrock well MW-28A had trichloroethene (0.054 mg/L) and 1,2-dichloroethene (0.0073 mg/L) detected in June 1995 indicating that the plume on the Dotson property has migrated northward within bedrock towards the Swannanoa River. In January/February 1996, trichloroethene was detected at 0.14 mg/L, and 1,2-dichloroethene was detected at a concentration of 0.018 mg/L. Both had increases over the June 1995 results.

2.5 Migration Pathways and Potential Receptors

2.5.1 Migration Pathways

Results of this site assessment have demonstrated that ground water both northeast and southwest of the Girmes facility has been affected. The primary constituent is trichloroethene detected in 18 of 29 monitoring wells. Since the beginning of the CSA, 1,2-dichloroethene has been detected in 15 of 29 monitoring wells. Vinyl chloride has been detected in two wells. The presence of 1,2-dichloroethene and vinyl chloride indicate that natural biodegradation is occurring. These constituents are intermediate metabolites resulting from the biotransformation of trichloroethene with the ultimate biotransformation end product being carbon dioxide, chloride, and water. Ground water transport is the primary pathway for any constituent from the site. Air transport and direct contact are not indicated as pathways because the constituents exist at depth. There is evidence of some ground water discharge to surface waters, as discussed below.

Northeast Plume

As indicated by the water table map on Plate 5 and the configuration of the VOC plume on Plate 6, ground water on the northeast side of the Girmes site flows north towards the NC DOT facility and then flows northwest towards the Swannanoa River where it is expected to discharge. Ground water quality data collected to date show that constituent concentrations on the northeast side are decreasing downgradient of the site. Natural degradation in combination with dispersion as the plume migrates northwest is anticipated to result in the dissipation of the plume before it reaches the Swannanoa River.

Southwest Plume

Ground water on the southwest side of the Girmes site flows southwest and west towards Gashes Creek where it is expected to discharge. Trichloroethene has been detected from a seep (SW-6) and intermittent stream (SW-5) adjacent to Gashes Creek and in the creek at Station SW-4. This indicates that the plume extends to Gashes Creek. Affected ground water present on the Dotson property is not considered to be attributed to the plume on the Girmes side of Gashes Creek. Dotson's plume is expected to migrate north and northeastward towards Gashes Creek and towards the Swannanoa River.

Migration of trichloroethene in the surface waters of Gashes Creek is a secondary migration pathway. Gashes Creek flows northward along the edge of the site and then continues another 700 feet to the Swannanoa River where it discharges. It is expected that the low concentrations of trichloroethene detected in Gashes Creek will dissipate to a point of nondetection before reaching the Swannanoa River. As shown on Plate 1, Gashes Creek and Swannanoa River are the only surface water bodies in the area.

Underground Utilities

Underground utilities such as sewer lines and storm sewer lines located in the vicinity of the site are shown on Plate 1. One sewer line is located on the southwest side of the Girmes facility and extends across Gashes Creek. The sewer line is located near the water table in the vicinity of Gashes creek and is exposed where it crosses the creek. The sewer line is connected to a main north-south trunk line on Dotson's property. This sewer line is in the area of affected ground water both on the Girmes site and on Dotson's property. It is not known if the sewer line acts as a migration pathway.

A storm sewer is located along the edge of the parking area at the Girmes facility and extends northwest and away from the site. This storm sewer is relatively shallow below the land surface. The depth to the water table in this area is over 40 feet. It is unlikely that this storm sewer enhances constituent migration in ground water.

A second storm sewer is located on DOT property. This line was placed in the original drainage swale prior to placing fill at the site. The sewer collects some ground water seeps as well as surface water runoff and drains northwestward to Gashes Creek where it discharges.

2.5.2 Potential Receptors

Free phase volatile organic compounds have not been found on site, and their concentrations in ground water are relatively low. The potential for accumulation of

free product or vapors is minimal. Therefore, there are no known structures at the site that are potentially at risk of being receptors of free product or vapors.

Potential receptors are limited to exposure through ground and surface water pathways. RMT completed a search for potential human receptors affected by ground water. Records maintained by the Asheville-Buncombe Water Authority were evaluated and a visual survey of the vicinity was conducted to identify ground water users within a 1,500-foot radius of the site boundary, as specified in the CSA guidance for determination of potential receptors. No probable users of ground water were identified within the 1,500-foot radius of the site. Three production wells have been identified: one on Girmes property and two on Dotson property. These are industrial wells and none of these wells are in use. The Asheville-Buncombe Water Authority services the entire area and provides service to residences within 1,500 feet of the Girmes site.

There are no surface water intakes for public water supply within the 1,500-foot boundary. A memorandum documenting the information provided by the Asheville-Buncombe Water Authority is included as Appendix K of the CSA.

The only residential area within the 1,500-foot radius of the site is located along Gashes Creek Road, east of the site (See Plate 1). This area is located on a ridge which acts as a ground and surface water divide. These homes are located upgradient of the site. Surface and ground water migration at the site is to the northwest, away from the residential area.

As required by the CSA, a compilation of owners of property located adjacent to the site has been gathered. Adjacent property owners are tabulated in Table 2-12 and their property locations are shown on Figure 2-1.

TABLE 2-12
SUMMARY OF ADJACENT PROPERTY OWNERS

MAP NUMBER	PIN NUMBER	OWNER NAME
1	9658-20-8152	State of North Carolina
2	9658-13-03-5331	Buncombe County
3	9658-17-00-8761	Ruby M. Pake
4	9658-17-00-9556	Brenda Ann Stinson
5	9668-17-00-6458	Ruth Teague
6	9658-17-00-7377	Georgia Miller
7	9657-08-99-3907	William H. Reed, Jr.
8	9658-20-90-2265	Grace Gordon Pless, *et al.*
9	9658-20-90-3532	Sweeten Creek Investments, Inc., *et al.*
10	9658-20-90-1866, 1790	Dotson Metal Finishing, Inc.
11	9658-20-91-1029	Gail C. Ballard, *et al.*

/usr3/hydro/7014401h/701442-2.fig
cgh 2-29-96

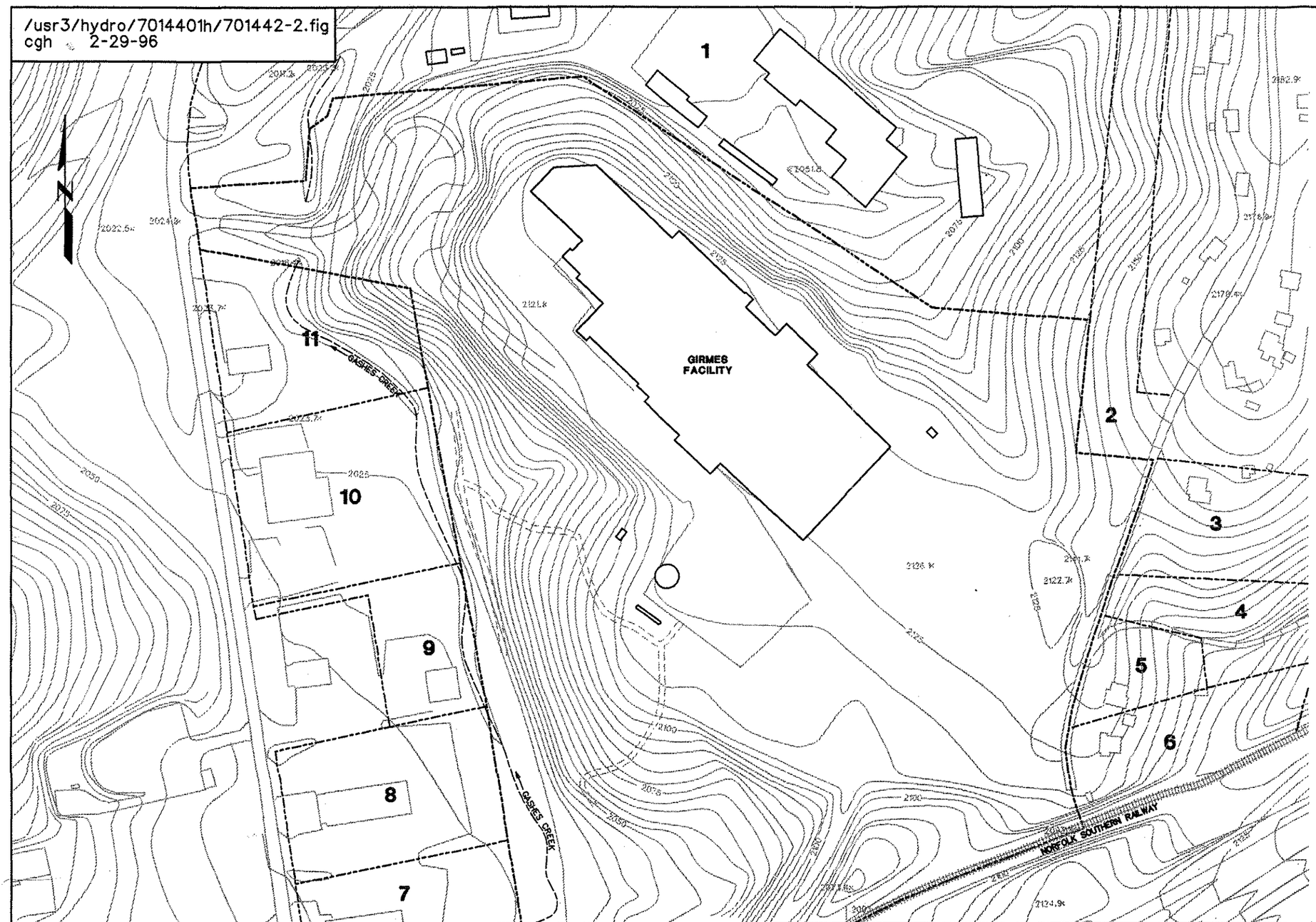

LEGEND

1 ADJACENT PROPERTY - SEE TABLE 2-10 FOR OWNER NAME AND PARCEL IDENTIFICATION NUMBER. PROPERTY BOUNDARIES ARE COPIED FROM BUNCOMBE COUNTY TAX MAPS.

0 200 400
SCALE IN FEET

RMT 70144.05
0296

FIGURE 2-1
ADJACENT PROPERTY OWNERS

GIRMES SITE, formerly SKF USA
ASHEVILLE, NORTH CAROLINA

Section 3
Corrective Action - Southwest Plume

A ground water recovery and treatment system is proposed for active remediation of the southwest plume. The system consists of a series of ground water extraction wells along the property line and ground water recovery pumps to transfer the water to a ground water treatment system. Discharge of the treated ground water is proposed either to Gashes Creek under an NPDES permit or to the Publicly Owner Treatment Works (POTW).

3.1 Source Identification for Southwest Plume

Source identification within the southwest plume has taken three forms: former employee depositions and the results of soil and ground water analysis.

The former employee depositions revealed that former solvent disposal practices included pouring small quantities of spent solvent on the ground on the northeast side of the manufacturing building. Recent soil sampling in the area did not identify a continuing source of VOCs in vadose zone soils.

It was also reported that small quantities of solvents may have been poured into a drain that extended from the building to the edge of the parking area on the southwest side of the facility. Visual site surveys have failed to locate the reported drain.

Based on the depositions and analytical results, and given the length of time (approximately 20 years) that has passed since the discharge of VOCs to soils last occurred, it is reasonable to conclude that there is no active source of VOCs on the Girmes site.

3.2 Evaluation of Remedial Alternatives

Since no active source areas are likely in the soil, the primary objective of the corrective action in the southwest area of the site is to restore ground water quality in the southwest portion of the Girmes site.

A summary of remedial options for restoring ground water quality in the southwest portion of the Girmes site is provided in Table 3-1.

TABLE 3-1
REMEDIAL OPTIONS FOR RESTORING GROUND WATER QUALITY
SOUTHWEST PLUME

REMEDIAL OPTIONS	ADVANTAGES	DISADVANTAGES	CAPITAL COST ESTIMATES	YEARLY OPERATION COSTS (FIRST YEAR)
Air Sparging	*In-Situ* Technology that does not require ground water recovery operations	Technology is not reliable in treating ground water in bedrock.	$625,000	$50,000
Cut Off Wall with *In-Situ* Air Stripping	Cut off wall may form a physical barrier to plume migration. Air stripping effective treatment for water flowing through stripping section.	Ground water may travel in fractures around cut off wall. Cost prohibitive for installation into bedrock.	$850,000	$50,000
Air Stripping Trench	Trench design enhances VOC removal in ground water that flows through trench.	Ground water may travel in fractures around trench. Cost prohibitive for installation into bedrock.	$1,100,000	$50,000
Ground Water Recovery Treatment and Discharge	A cone of depression is produced around pumping wells that will retard plume migration. Affected ground water is removed and treated.	Must have outlet for treated ground water. Must have sufficient ground water yields.	$660,000	$50,000

The water table is below bedrock surface on top of the ridge at the Girmes site. The water table is at or just above the bedrock surface on the southwest side of the property near Gashes Creek.

A ground water recovery, treatment, and discharge system is the remedial option selected for the southwest plume. It has the advantage of removal and treatment of the affected ground water and producing a cone of depression around the pumping wells. This cone will tend to draw more affected water into the well and stop further plume migration.

The disadvantage of a ground water recovery system in bedrock is that it relies on recovery wells that intercept water producing fractures. Usually producing fractures that are encountered are tight and yield little ground water. As a result, capture zones for each recovery well are limited in size and thus, have a limited effect. Another disadvantage of ground water

recovery and treatment is the disposal of the treated ground water. Site topography (hillside location) and soil characteristics (silty clay) are not favorable for reinfiltration.

The treated ground water may be discharged through an NPDES outfall on Gashes Creek. As an option, discharge to the local POTW may be possible because the branch sewer line servicing the site may have sufficient capacity to receive up to 20,000 gallons of treated water per day.

3.3 Design Criteria

Design of the ground water recovery and treatment system was based on the delineation of the southwest plume, results of hydraulic conductivity tests, seepage velocity and vertical gradient calculations as found in the CSA, and results of pumping tests performed on well RW-1 in June 1995. This information produced the following basis for design:

- Ground water will be collected from five ground water recovery wells located near the southwest property line.
- The ground water recovery wells will be completed approximately 25 feet below the top of bedrock.
- Each well is estimated to yield 3 to 6 gallons per minute (gpm) for a total yield of 15 to 30 gpm.
- Recovered VOCs will include trichloroethene, 1,2-dichloroethene, and vinyl chloride. The maximum detected concentrations for each of these VOCs is 14 mg/L, 0.67 mg/L, and 0.029 mg/L, respectively.
- VOC removal is expected to be the only treatment required for NPDES discharge.
- Air stripping will sufficiently remove VOCs from the ground water to meet discharge permit limits.
- VOC emissions from the air stripper will be less than 0.054 pounds per hour and are not expected to require a control device.
- Approval provided for discharge of treated ground water to Gashes Creek or to the POTW.

3.4 Process Approach

Overview

The ground water recovery and treatment system's process design consists of a system of recovery wells for the removal of ground water. An electric submersible pump will be installed in each recovery well. The pumps will transfer the ground water through a common header to a surge tank. Based on the surge tank's water level, a booster pump will periodically pump the water from the surge tank to the top of the air stripper. The water will gravity flow through the air stripper to an integral sump. The treated ground water will gravity flow from the air

stripper's sump through a parshall flume to a diffuser in Gashes Creek or to the sanitary sewer. A flow diagram of the ground water recovery and treatment system is provided as Figure 3-1. A general layout of the ground water recovery and treatment system is shown on Plate 8, and equipment vendor cut sheets are provided in Appendix C.

Ground Water Recovery

Capture zones were calculated for an area on the southwest property boundary in the vicinity of RW-1. The GPTRAC module of the US EPA Wellhead Protection Area delineation program (WHPA) was used for the capture zone analysis. GPTRAC is a semi-analytical model which provides for pathline and time-related capture zone delineation using analytical velocity computation techniques. Specific information descriptive of possible aquifer conditions at each of the areas was used as input to GPTRAC (Table 3-2). The aquifer was specified as unconfined. An effective porosity of 0.25 was assumed for the materials comprising the aquifer. The transmissivity value for model input was based on the pumping test results for well RW-1.

TABLE 3-2
CAPTURE ZONE MODELING ANALYSIS
INPUT PARAMETERS

PARAMETER	VALUE SOUTHWESTERN AREA	DATA SOURCE
Type of Aquifer	Unconfined	
Effective Porosity	0.25	CSA
Aquifer Thickness (feet)	45	Information from RW-1 and RW-2
Transmissivity (ft^2/day)	25	Aquifer test results
Hydraulic Gradient	0.070	CSA
Boundary Conditions	Stream boundary	Presence of Gashes Creek
Areal Recharge Rate (inches/year)	8	USGS
Pumping Rate (gpm)	3	Estimated
Well Diameter (inches)	6	Design parameter
Number of Pumping Wells	5	

J:\CAD\GRAPHIC\70144\FIG3-1.DWG

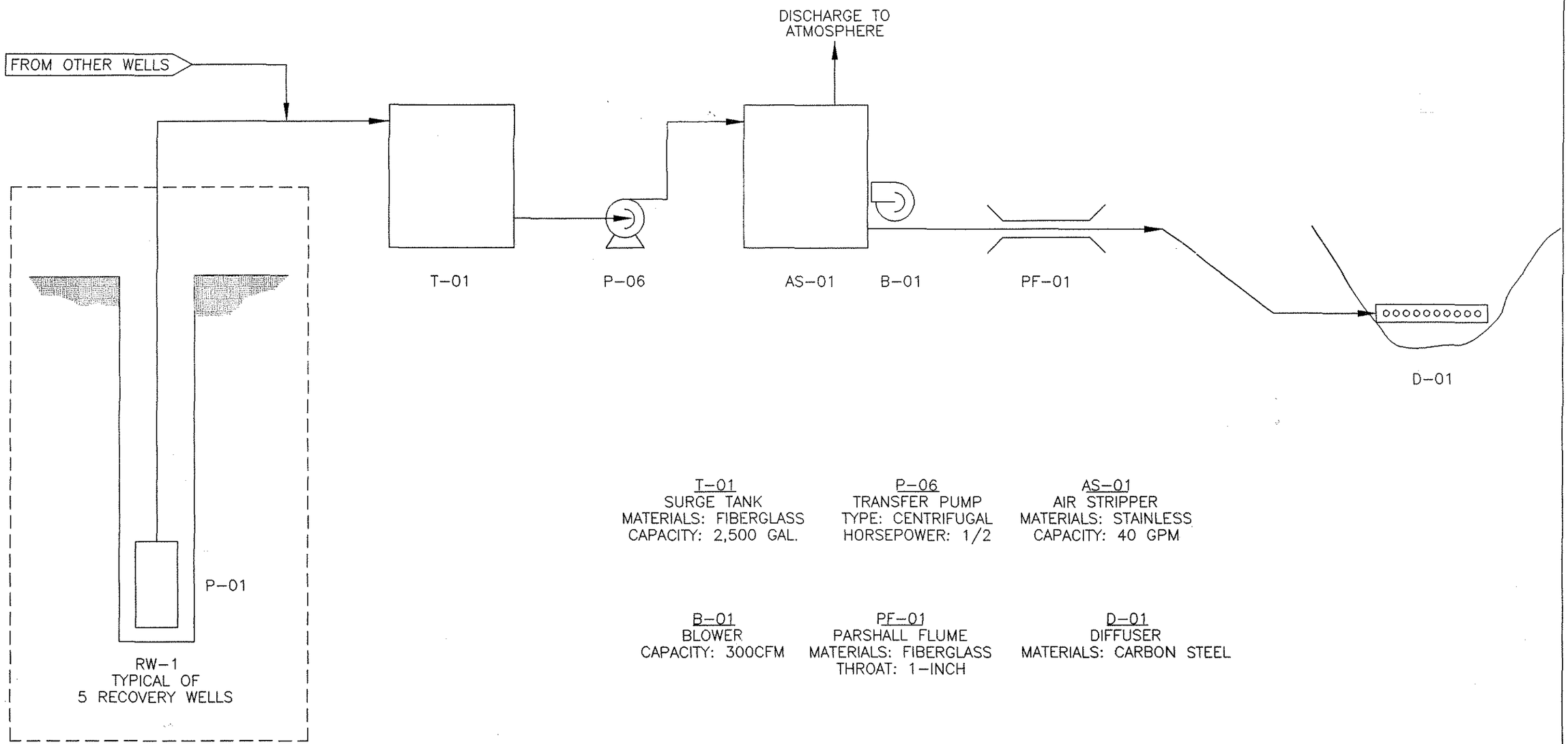

T-01
SURGE TANK
MATERIALS: FIBERGLASS
CAPACITY: 2,500 GAL.

P-06
TRANSFER PUMP
TYPE: CENTRIFUGAL
HORSEPOWER: 1/2

AS-01
AIR STRIPPER
MATERIALS: STAINLESS
CAPACITY: 40 GPM

B-01
BLOWER
CAPACITY: 300CFM

PF-01
PARSHALL FLUME
MATERIALS: FIBERGLASS
THROAT: 1-INCH

D-01
DIFFUSER
MATERIALS: CARBON STEEL

P-01 TO P-05
SUBMERSIBLE WELL
PUMPS
GRUNDFOS MODEL: 5505-13
HORSEPOWER: 1/2
VOLTAGE: 110

70144.05
0296

FIGURE 3-1
FLOW DIAGRAM OF
TREATMENT SYSTEM

GIRMES SITE
FORMERLY SKF USA
ASHEVILLE, NC

Plots showing the calculated theoretical capture zones for each area of ground water extraction is presented on Plate 9. The aquifer in the southwest portion of the site, in the vicinity of Gashes Creek, is generally expected to be more productive than elsewhere on the site as indicated by differences in well yield observed between RW-1 and RW-2. Therefore, a total of five ground water recovery wells (including RW-1) pumping at 3 gpm are each proposed along the southwest property boundary.

In addition to well RW-1 which already exists, four ground water recovery wells will be installed along the southwest property line. The wells will be constructed of 6-inch nominal, flush-joint schedule 40 PVC surface casing extending from land surface to the top of bedrock. The recovery wells will be completed approximately 25 feet below the top of bedrock. The wells will be constructed with an open hole completion within bedrock. Figure 3-2 is a typical well construction diagram of the recovery wells proposed for the southwest plume. A Grundfos Redi-Flo Model 5E12 electric submersible pump or equal will be installed in each recovery well. Each pump is equipped with a ½-horsepower motor and has an operating flow rate range of 1.2 to 7 gpm. At 100 feet of total dynamic head, the pump will produce 7 gpm.

The submersible pumps are expected to deliver an average flow rate of 15 gpm to the surge tank. A booster pump rated at 35 gpm will periodically pump the water from the surge tank to the airstripper. The submersible pumps are interlocked with the water level in the surge tank such that an abnormally high water level in the surge tank (high level alarm condition) will turn off the submersible pumps and prevent overflow of the surge tank. Under normal operating conditions the booster pump, operating at 35 gpm, will maintain the water below the high level alarm switch point and the submersible pumps will independently cycle depending upon water level in each recovery well.

The booster pump is also interlocked with the surge tank's water level and will operate between high and low water level switch points. This control is further described in the Section 4.

The extracted ground water will be conveyed to the surge tank through a buried common header. The header will be constructed of 3-inch schedule 80 PVC or equal.

J:\CAD\HYDRO\WELL-DIA\7014405.DWG

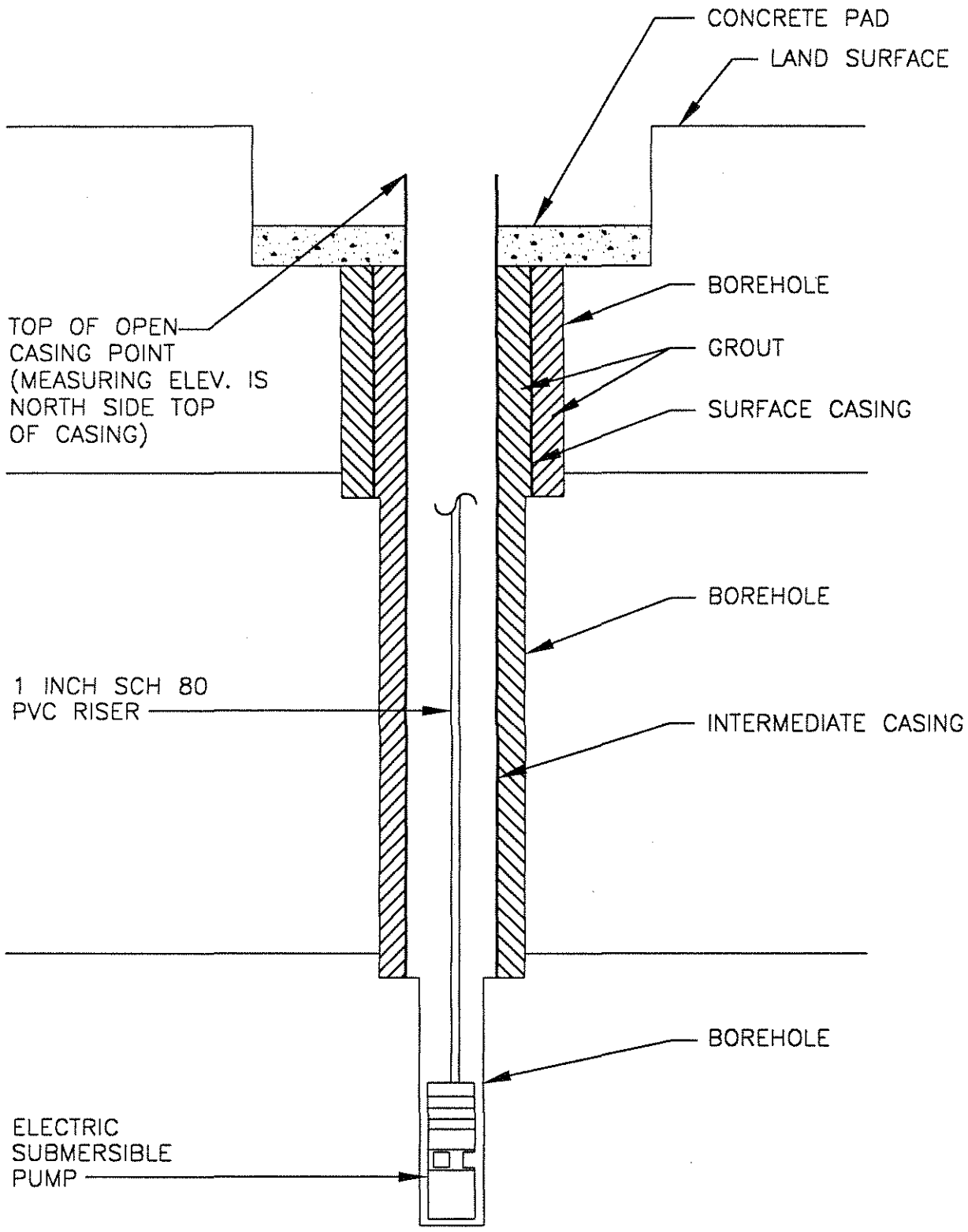

FIGURE 3-2

TYPICAL RECOVERY WELL CONSTRUCTION DIAGRAM

Not To Scale

70144.05
0396

GIRMES SITE
FORMERLY SKF USA
ASHEVILLE, NC

Surge Tank

The surge tank is a 2,500-gallon vertical tank. Level sensors monitor the water level within the tank, and provide system control for the following operating conditions.

WATER LEVEL	CONDITION	SYSTEM CONTROL
High Level Alarm	Abnormally high water level	Shuts down system, activates autodialer, requires manual restart.
High Water Level	Surge tank is operationally full.	Turns on booster pump.
Low Water Level	Surge tank is operationally empty.	Turn off booster pump. Turn on submersible pumps.
Low Level Alarm	Abnormally low water level.	Shuts down system activates autodialer, requires manual restart.

Booster Pump

The booster pump is a DURCO Mark III ANSI process pump or equal. The pump is a ½-horse power centrifugal pump capable of delivering 35 gallons per minute at a Total Dynamic Head (TDH) of 30 feet.

Low-Profile Air Stripper

The extracted ground water is transferred to the top of the low profile air stripper unit (Figure 3-3) by the booster pump. Once in the unit, the water flows across the upper distribution tray of the air stripper where is it uniformly distributed over a pattern of 3/16-inch diameter holes through which a continuous stream of air is passed. The extracted ground water then drains by gravity through trays (maximum of six) to a sump located at the bottom of the air stripper. As the extracted ground water passes downward through these trays, an air stream is continuously forced upward through the ground water by an air blower.

This countercurrent flow of extracted ground water and air induces a mass transfer of VOCs from the ground water into the air stream. In this manner, VOCs are stripped from the water phase and introduced to the air phase. Treated ground water then flows by gravity from the low-profile air stripper through a flow-measuring flume and into the discharge pipe.

Based on the complete removal of the maximum expected VOC concentrations, the mass transfer of VOCs to the air stream should be at or less than 0.054 pounds per hour. Mass transfer calculations are provided in Appendix D.

Parshall Flume

A Parshall flume with a 1-inch throat will be used for measuring the discharge flow rate of the treated ground water.

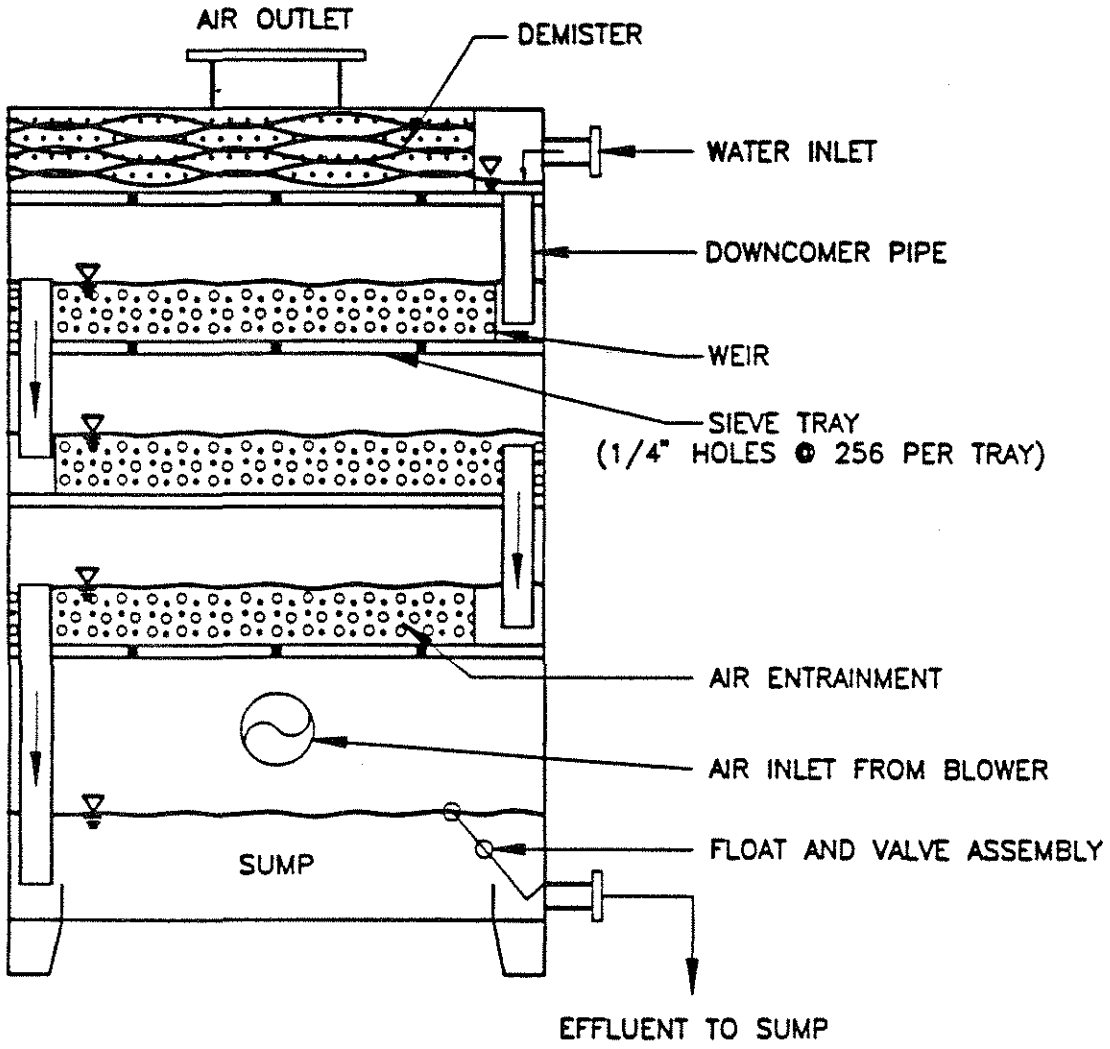

NOTE: GIRMES SYSTEM AIR STRIPPER WILL HAVE SIX TRAYS

FIGURE 3-3

TYPICAL LOW PROFILE
AIR STRIPPER

RMT INC. 70144.05
0396

GIRMES SITE
FORMERLY SKF USA
ASHEVILLE, NC

3.5 System Layout

A layout of the system is provided in Plate 8. Five recovery wells will be installed along the southwest property line and a common underground header will convey recovered ground water to the treatment system. The ground water treatment system will be located within a new treatment building sited southeast of monitoring well MW-27. The discharge will be to the west of the treatment building either to Gashes Creek or to the POTW collection system.

3.6 System Security and Safety Measures

The recovery wells will be finished below grade in locked well vaults. All above ground piping and equipment is located in the treatment building. The treatment building will be locked to limit access. Area lighting will be provided at the treatment building.

The treatment system has been designed with automated controls having manual overrides. It is designed for unattended operation, and in the event of an abnormal operating condition, the system will shut down and an autodialer will phone the treatment system operator and inform the operator of the system shutdown.

Operation of the treatment system will require a certified operator. It is anticipated that the permit will require daily system inspections during startup and an initial period of operation. After a period of trouble-free operation, it is anticipated that the system inspections will be reduced to once per week.

3.7 Operations and Maintenance Manual

An Operations and Maintenance manual will be developed during the final design and will be finalized prior to system startup. Typical maintenance includes periodic washdown of the air stripper's tray sections and cleaning the inlet screens on the air stripper's blower. A maintenance schedule will be provided in the O&M manual.

3.8 Ground Water Monitoring Program

A ground water monitoring program is proposed to monitor the VOC constituents in ground water in the southwest area of the site. This program includes sampling ground water and surface water on a semiannual basis. Ground water samples will be collected from all five recovery wells and seven monitoring wells, MW-14, MW-18, MW-19, MW-20, MW-21, MW-24, and MW-27. Surface water samples will be collected from sample stations SW-1, SW-2, SW-3, and SW-4 on Gashes Creek. Samples will be analyzed for trichloroethene, 1,2-dichloroethene, and vinyl chloride. Following the last sampling event of each year, Girmes will submit an annual monitoring report to NC DEHNR. The report will present monitoring results for that year and recommend modifications to the monitoring program as necessary. Monitoring will

continue until it can be demonstrated that the concentration of monitoring parameters has remained below the 2L standard for a period of 1 year. If after 1 year of monitoring, analytical data demonstrate that attaining the 2L standards is technically impractical, a demonstration of technical impracticability will be submitted to NC DEHNR for review. If either of the above criteria is met, Girmes will request shutdown of the remedial system. Ground and surface water monitoring will continue for a period of 1 year following system shutdown.

3.9 Required Permits

An NPDES permit will be required for discharge of the treated ground water to Gashes Creek. The schedule provided in Section 6 of this report shows submittal of the NPDES. The option to discharge treated ground water to the POTW will require a permit from the Metro Sewer District.

It is doubtful that an air permit will be required for operating the air stripper; however, a letter notifying the Department of Air Quality of the air stripper's operating parameter and requesting a permit waiver will be submitted to the state.

Section 4
Corrective Action - Northeast Plume

Natural remediation is proposed as the corrective action for the northeast plume. A ground water monitoring program is proposed to monitor the natural remediation processes occurring within the northeast plume, including the combined affects of natural attenuation and anaerobic biodegradation. Currently available data support the conclusions that natural remediation is occurring and that the northeast plume will be remedied prior to reaching the Swannanoa River.

MW-20 is located between the Swannanoa River and the leading edge of the northeast plume. It is also within the predicted hydraulic pathway of the northeast plume. Ground water sampling results from MW-20 will be used as the leading indicator of ground water restoration by natural remediation and as the control to determine if more active corrective measures are required.

4.1 Source Identification

Source identification within the northeast plume has taken three forms: former employee depositions and the results of soil and ground water analysis.

The former employee depositions revealed that former solvent disposal practices included pouring small quantities of spent solvent on the ground on the northeast side of the manufacturing building. There is no evidence of burial areas north of the manufacturing building. Recent soil sampling in the area did not identify a continuing source of VOCs in vadose zone soils.

Based on the depositions and analytical results, and given the length of time (approximately 20 years) that has passed since the discharge of VOCs to soils last occurred, it is reasonable to conclude that there is no active source of VOCs on the Girmes site and northeast of the manufacturing building.

4.2 Evaluation of Remedial Alternatives

Since no active source areas are likely in the soil, the primary objective of the corrective action in the northeast area of the site is to restore ground water quality in the northeast area of the Girmes site.

A summary of remedial options for restoring ground water quality in the northeast plume is provided in Table 4-1.

TABLE 4-1
REMEDIAL OPTIONS FOR RESTORING GROUND WATER QUALITY
NORTHEAST PLUME

REMEDIAL OPTIONS	ADVANTAGES	DISADVANTAGES	CAPITAL COST ESTIMATES	YEARLY OPERATION COSTS (FIRST YEAR)
Air Sparging	*In-Situ* Technology that does not require ground water recovery operations	Technology is not reliable in treating ground water in bedrock. Aeration will shut down the anaerobic degradation of TCE in the aquifer.	$718,000	$50,000
Cut Off Wall with *In-Situ* Air Stripping	Cut off wall may form a physical barrier to plume migration. Air stripping effective treatment for water flowing through stripping section.	Ground water may travel in fractures around cut off wall. Cost is prohibitive for installation into bedrock. Low water yields in bedrock.	$950,000	$50,000
Air Stripping Trench	Trench design enhances VOC removal in ground water that flows through trench.	Ground water may travel in fractures around trench. Cost prohibitive for installation into bedrock. Low water yields in bedrock.	$1,300,000	$50,000
Ground Water Recovery Treatment and Discharge	A cone of depression is produced around pumping wells that will retard plume migration. Affected ground water is removed and treated.	Insufficient water yields in bedrock.	$780,000	$50,000
Natural Remediation based on natural attenuation and intrinsic bioremediation	Uses naturally occurring mechanisms to restore aquifer quality. Cost effective.	Does not hydraulically contain the Plume.	$10,000	$39,000

The water table is below bedrock surface on top of the ridge at the Girmes site. The water table is above bedrock in most areas on the NC DOT property.

In-situ technologies such as air sparging, *in-situ* air stripping, and cut off walls are not appropriate for remediating ground water in fractured rock because the ground water can migrate around the treatment structures through other fractures. Therefore, *in-situ* technologies are not recommended. Since the existing bedrock wells in the northeast plume area yield very little water, ground water recovery is not recommended within the northeast plume. (Test well

RW-2 has an estimated yield of 0.5 gallons per minute. Open hole bedrock monitoring wells MW-4 and MW-5 both go dry during purging with low yield sampling pumps.)

Natural remediation, based on natural attenuation and intrinsic bioremediation, is the recommended remedial option for the northeast plume. This process is shown to be occurring within the area of the northeast plume, and current data strongly suggests that the natural remediation mechanisms will sufficiently restore aquifer quality.

4.3 Capacity to Degrade

The pathway of microbial degradation of halogenated constituents under anaerobic conditions has been documented in several laboratory studies including the following:

- *Transformations of Halogenated Aliphatic Compounds.* Vogel *et al.* 1987;
- *Bioengineering Issues Related to in-situ Remediation of Contaminated Soils and Groundwater.* McCarty 1988;
- *In-situ Aquifer Restoration of Chlorinated Aliphatics by Methanotrophic Bacteria.* US EPA 1989;
- *Biotransformation of Tetrachloroethylene to Trichloroethylene, Dichloroethylene, Vinyl Chloride, and Carbon Dioxide under Methanogenic Conditions.* Vogel and McCarty, 1985;
- *Reductive Dehalogenation: A Subsurface Bioremediation Process.* Sims *et al.* 1990/91; and
- *Intrinsic Bioremediation.* R.E. Hinchec, J.T. Wilson, and D.C. Downey (editors) Batelle Press, 1995.

In general, this pathway of reductive dehalogenation results in the production of less halogenated constituents than originally present. The reductive transformation occurs when a source of carbon is available and environmental conditions favor the production of methane. Anaerobic microorganisms other than methane-producing bacteria may also participate in the reductive dehalogenation process. These above studies, as well as others, substantiate observations from field investigations in which constituents such as 1,2-dichloroethene are observed but are known to have never been used at the location. Studies such as the ones noted above indicate the biological conditions and processes that result in the transformation of chlorinated constituents. Knowledge of this pathway and the conditions that encourage microorganisms to degrade halogenated constituents, *e.g.*, trichloroethene to 1,2-dichloroethene to vinyl chloride to ethene, and ultimately to CO_2, therefore, allows for the evaluation of this naturally-occurring or intrinsic bioremediation.

Biodegradation Products

The presence of 1,2-dichloroethene and vinyl chloride in the ground water suggest that the degradation of trichloroethene is occurring in the subsurface at the Girmes facility. Plate 6 shows 1,2-dichloroethene and vinyl chloride concentrations found in ground water at the

specific monitoring locations. This map shows that sample points that have elevated concentrations of trichloroethene also have elevated concentrations of 1,2-dichloroethene.

MW-13 is shown to be the furthest ground water monitoring well downgradient of the manufacturing building and containing VOCs. MW-13 is on the downgradient edge of the plume and when last sampled in January 1996, has no detectable amounts of trichloroethene or 1,2-dichloroethene, and a detectable amount (0.0048 mg/L) of vinyl chloride. These data imply that by the time affected ground water reaches MW-13, potentially detectable amounts of trichloroethene have already degraded to 1,2-dichloroethene and vinyl chloride.

These data also imply that if anaerobic biodegradation of the trichloroethene had not occurred, a potential concentration of 0.0094 mg/L trichloroethene would be possible at MW-13. This potential concentration was obtained by calculating the amount of trichloroethene required to produce a 0.0048 mg/L solution of vinyl chloride. Since trichloroethene degrades to 1,2-dichloroethene and then to vinyl chloride, this calculation gives a rough approximation of the potential concentration of trichloroethene at MW-13 if degradation had not occurred.

Using the potential trichloroethene concentration as a basis, the data also implies that by the time affected ground water reaches MW-13, the following will occur:

- 100 percent of the potentially detectable trichloroethene has biodegraded to vinyl chloride,
- None of the potentially detectable trichloroethene is represented by 1,2-dichloroethene,
- Since trichloroethene degrades to 1,2-dichloroethane and then to vinyl chloride, and since only vinyl chloride is detected at MW-13, the degradation process is shown to be nearly complete by the time affected ground water reaches MW-13.

Reductive Dehalogenation Indicators

In the assessment of reductive dehalogenation as a method of intrinsic bioremediation, assessment of other parameters to indicate that anaerobic conditions exist in the aquifer provide additional data to support the conclusion that this naturally-occurring process is in progress.

The indicators of anaerobic (reducing) conditions chosen for this initial assessment include the gases methane, ethene, ethane, and minerals dissolved iron, and dissolved manganese. The gases indicate that anaerobic microbial metabolism is most likely occurring while the dissolved minerals indicate that reducing conditions exist in the aquifer, which make it possible for anaerobic bacteria to thrive. As shown on Tables 2-5 and 2-8, MW-20 has dissolved and total minerals that are essentially equivalent, indicating the mineral is dissolved. These minerals tend to be in the dissolved phase when in a reducing environment, further substantiating the intrinsic bioremediation of trichloroethene. Similar results are shown for MW-9, MW-15, MW-15A, MW-16, MW-16A, and RW-02. As shown on Table 2-6, methane was detected in MW-4, MW-13, MW-15, MW-17, MW-20, RW-01, and RW-02. The presence of methane is

another indicator that anaerobic microbial metabolism is most likely occurring. The evaluation of ethene and ethane was to assess whether the chlorinated parent constituent, trichloroethene, had been reductively dechlorinated. Neither ethene nor ethane was detected indicating the microbial transformation of these compounds has not occurred or the transmation of these compounds has occurred and they have been degraded to CO_2 and H_2O.

These dissolved or reduced minerals, and the presence of methane indicate that conditions exist in which anaerobic microorganisms can degrade halogenated constituents to less halogenated constituents and ultimately to CO_2.

4.4 Time and Direction of Constituent Travel

Constituent migration rates for the northeast plume can be estimated based on the average ground water flow rate for the northeast portion of the site and the estimated retardation factor for each constituent present. The velocity of each constituent can be estimated using the following equation:

$$V_C = V / [1 + Kd\,(\rho_b / n)]$$

where:

	V_C	= constituent velocity
	V	= ground water seepage velocity
	Kd	= distribution coefficient
	ρ_b	= soil bulk density
	n	= soil total porosity.

The distribution coefficient Kd for each constituent is estimated as a product of the soil adsorption coefficient (K_{oc}) for each constituent and the organic carbon content of the subsurface materials (f_{oc}). Table 4-1 presents constituent velocity calculations used to develop the estimates. Constituent velocities in saprolite soils on the northeast side of the Girmes site range from approximately 28 feet per year for trichloroethene to approximately 30 feet per year for 1,2-dichloroethene. Constituent velocities in saprolite soils on the northwest portion of the NC DOT property are higher, ranging from approximately 130 feet per year for trichloroethene to approximately 139 feet per year for 1,2-dichloroethene.

TABLE 4-2
CONSTITUENT VELOCITY ESTIMATES

Compound	K_{oc} (mL/g)	Kd (mL/g)	V_c (ft/yr)	
			V = 31 ft/yr	V = 145 ft/yr
Trichloroethene	126	0.0252	28	130
1,2-Dichloroethene	49	0.0098	30	139
Vinyl chloride	57	0.0114	29	138

K_{oc} values from *Basics of Pump-and-Treat Ground-Water Remediation Technology*, by James W. Mercer, David C. Skipp, and Daniel Griffin, 1990, US EPA/600/8-90/003.
Kd values calculated assuming an aquifer soil organic carbon content of 0.02 percent.
Assumes soil bulk density = 1.4 g/cc and porosity = 0.3.

The direction of constituent travel in the northeast plume can be estimated from the ground water flow directions present in Plate 5. The northeast plume is narrowing and the primary direction of constituent migration is expected to be to the north and northwest.

4.5 Constituent Concentration at Potential Receptors

Receptors include utility lines, basements, elevator shafts, public and domestic supply wells, surface water, and ground water areas identified for planned resource development. On the basis of information presented in the CSA and this CAP, no potential receptors will be affected by the northeast plume.

4.6 Potential Off-Site Migration

As shown on Plate 3, some off-site migration of the northeast plume has occurred; however, based upon the capacity for the constituents to degrade (Section 4.2) and time and direction of constituent travel (Section 4.3), further migration of constituents is not anticipated because the plume constituents are being depleted within the area of the existing plume through natural remediation.

4.7 Effects on Surface Water Quality

As stated in the previous section, further migration of constituents is not anticipated because the plume constituents are being depleted with the area of the existing plume through natural remediation.

4.8 Ground Water Monitoring Program

A ground water monitoring program is proposed to track the degradation and attenuation of VOC constituents within and downgradient of the northeast plume. Regulations require that monitoring take place no greater than the distance the ground water is predicted to travel in 5 years.

The direction of constituent movement in the northeast plume is towards MW-13 and MW-20. The monitoring program will consist of sampling water from 17 monitoring wells: MW-2, MW-4, MW-5, MW-6, MW-7, MW-8, MW-9, MW-11, MW-12, MW-13, MW-15, MW-15A, MW-16, MW-16A, MW-17, and MW-20. Samples will be analyzed for trichloroethene, 1,2-dichloroethene, and vinyl chloride. Each well will be sampled semiannually for a minimum of 1 year. After the first year of semiannual monitoring, any well that has had two consecutive semiannual monitoring events with no exceedances of the 2L standards will be monitored thereafter on an annual basis. Following the last sampling event of each year, SKF will submit an annual monitoring report to NC DEHNR. The report will present monitoring results for that year and recommend modifications to the monitoring program as necessary.

Monitoring will continue until it can be demonstrated that the concentration of VOC monitoring parameters has remained below the 2L standard for a period of 1 year. If after 1 year of monitoring, analytical data demonstrate that attaining the 2L standards is technically impractical, a demonstration of technical impracticability will be submitted to NC DEHNR for review.

4.9 Access Agreements

The monitoring plan described in Section 4.7 requires access to the NC DOT property. An access agreement with NC DOT has already been obtained and ground water is routinely sampled on NC DOT property.

4.10 Public Notice

Notification of the request for approval of natural remediation of the northeast plume has been sent by certified mail to four parties:

James Westbrook, Jr.
Asheville City Manager
70 City County Plaza
Asheville, NC 28801
(704) 258-3223

George Bond
Director
Buncombe County Health Department
35 Woodfin Street
Asheville, NC 28801
(704) 255-5682

Danny Tolar
NC DOT
P. O. Box 3279
Asheville, NC 28802

Paul Flay
Asheville Property Administration and Leasing
c/o J.L. deBall Girmes Canada, Inc.
35 Little Ball Industrial
Granby, Quebec J251A5
Canada

Copies of the four letters and certified mail forms are included in Appendix E. The completed certified mail receipt will be forwarded under separate cover.

Section 5
Compliance with Environmental Law

Two corrective actions have been discussed in this CAP for the remediation of the southwest and northeast plumes. The elements of those actions discussed in this plan have been written in an attempt to be consistent with other environmental laws.

Section 6
Schedule

A corrective action schedule is provided as Plate 10.

Section 7
References

Bouwer, H. and R.C. Rice. 1976. A Slug Test for Determining Hydraulic Conductivity of Unconfined Aquifers With Completely or Partially Penetrating Wells. Water Resources Research. Volume 12, pp 432-428.

Bouwer, H. 1989. *The Bouwer and Rice slug Test - An Update.* Ground Water. Volume 27, No. 3, pp 304-309.

Freeze, R.A., and J.A. Cherry. 1979. *Ground Water.* Prentice Hall, Inc.

Hinchec, R.E.., J.T. Wilson, and D.C. Downey (editors). 1995. Intrinsic Bioremediation, Battelle Press, Columbus, Ohio.

McCarty, P.L. 1988. *Bioengineering Issues Related to* In-Situ *Remediation of Contaminated Soils and Groundwater.* In: Environmental Biotechnology, G. S. Omenn, ed. Plenum Publishing Corp., New York.

Miller, Jr., J. William. 1990. *The Geology of the Asheville 7-1/2 Minute Quadrangle: A Preliminary Study of the Beaucatcher Roadcut and the Reed Creek Stream Cut.* North Carolina Geological Survey, Division of Land Resources, Department of Environment, Health and Natural Resources.

Sims *et al.* 1990/91. *Reductive Dehalogenation: A Subsurface Bioremediation Process.* Remediation/ Vol. 1, No. 1.

Soller, D.R., and H.H. Mills. 1991. *Surgical Geology and Geomorphology,* in Horton, J.W., Jr., and Zullo, V.A., editors, The Geology of the Carolinas. The University of Tennessee Press, pp 203-208.

US EPA. 1989. In-Situ *Aquifer Restoration of Chlorinated Aliphatics by Methanotrophic Bacteria.*

Vogel, Timothy M. and Perry L. McCarty, 1985. *Biotransformation of Tetrachloroethylene to Trichloroethylene, Dichloroethylene, Vinyl Chloride, and Carbon Dioxide under Methanogenic Conditions.* Appl. Environ. Microbiol. 49:1080-1083

Vogel *et al.* 1987. *Transformations of Halogenated Aliphatic Compounds.* Env. Sci. Techn. 21(8):722-736.

Appendix A

Well Construction Diagrams and Boring Logs for Test Wells RW-1 and RW-2, and Monitoring Wells MW-28 and MW-28A

\WEL-DIA\SKFRW-1.DWG

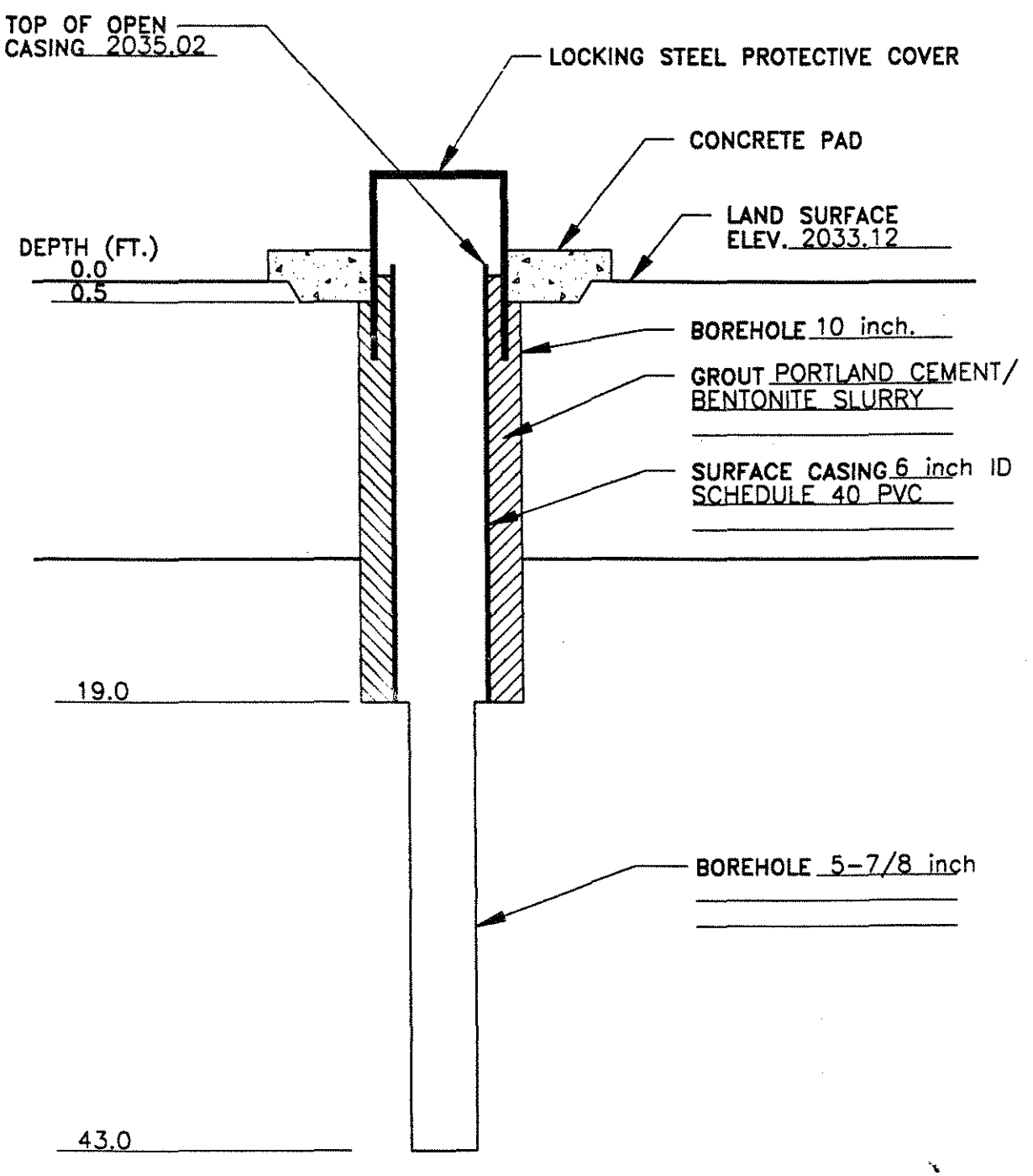

RECOVERY WELL CONSTRUCTION DIAGRAM

Not To Scale

PROJECT SKF-ASHEVILLE

PROJECT NO. 70144.05

WELL NO. RW-1

DATE INSTALLED 6-15-95

DRILLING CONTRACTOR AE DRILLING SERVICES

RMT GEOLOGIST K.A. LAUBER

\WEL-DIA\SKFRW-2.DWG

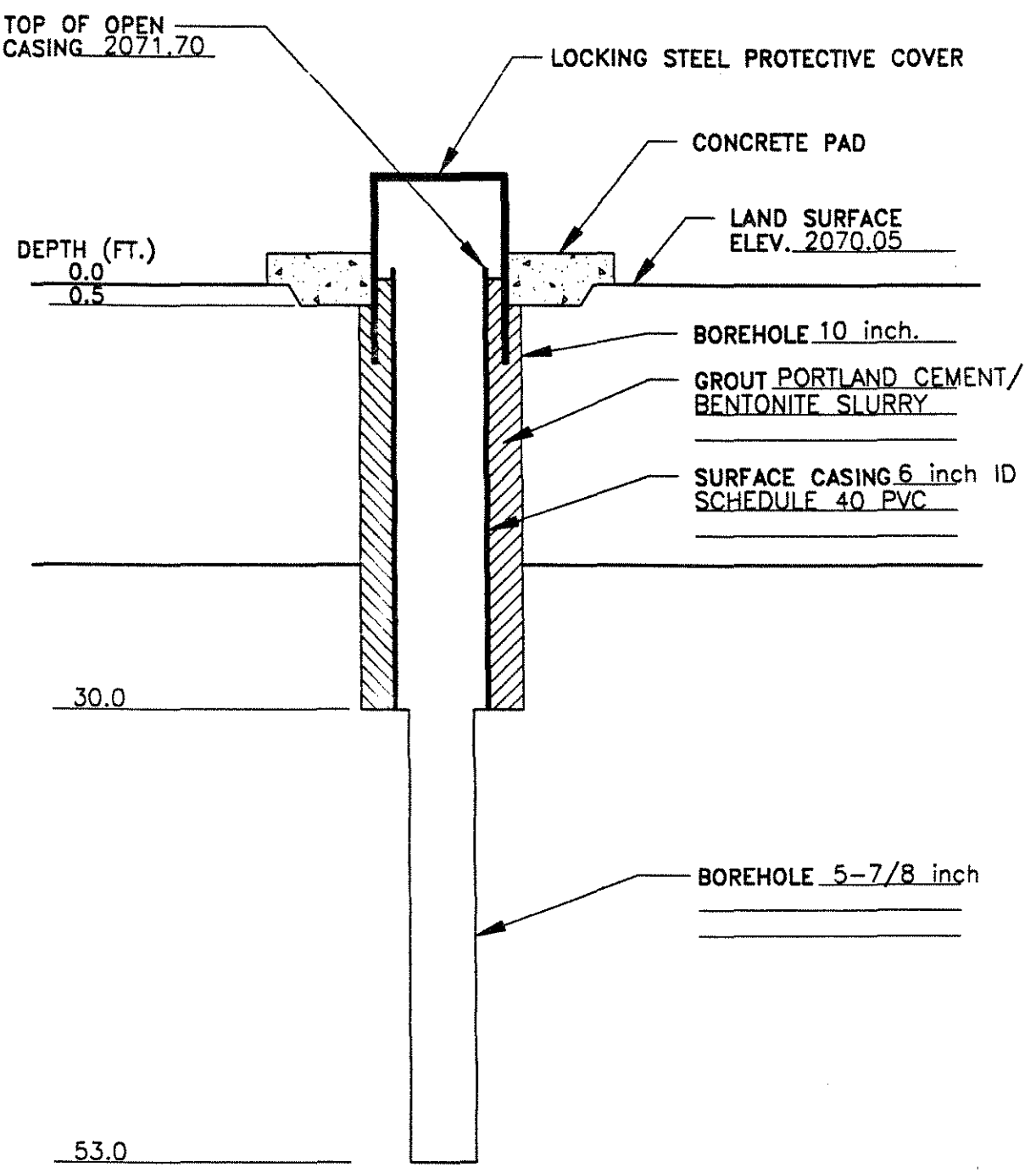

RECOVERY WELL CONSTRUCTION DIAGRAM

Not To Scale

PROJECT SKF-ASHEVILLE

PROJECT NO. 70144.05

WELL NO. RW-2

DATE INSTALLED 6-13-95

DRILLING CONTRACTOR AE DRILLING SERVICES

RMT GEOLOGIST M.G. JONES

/WEL-DIA/SKFMW28.DWG

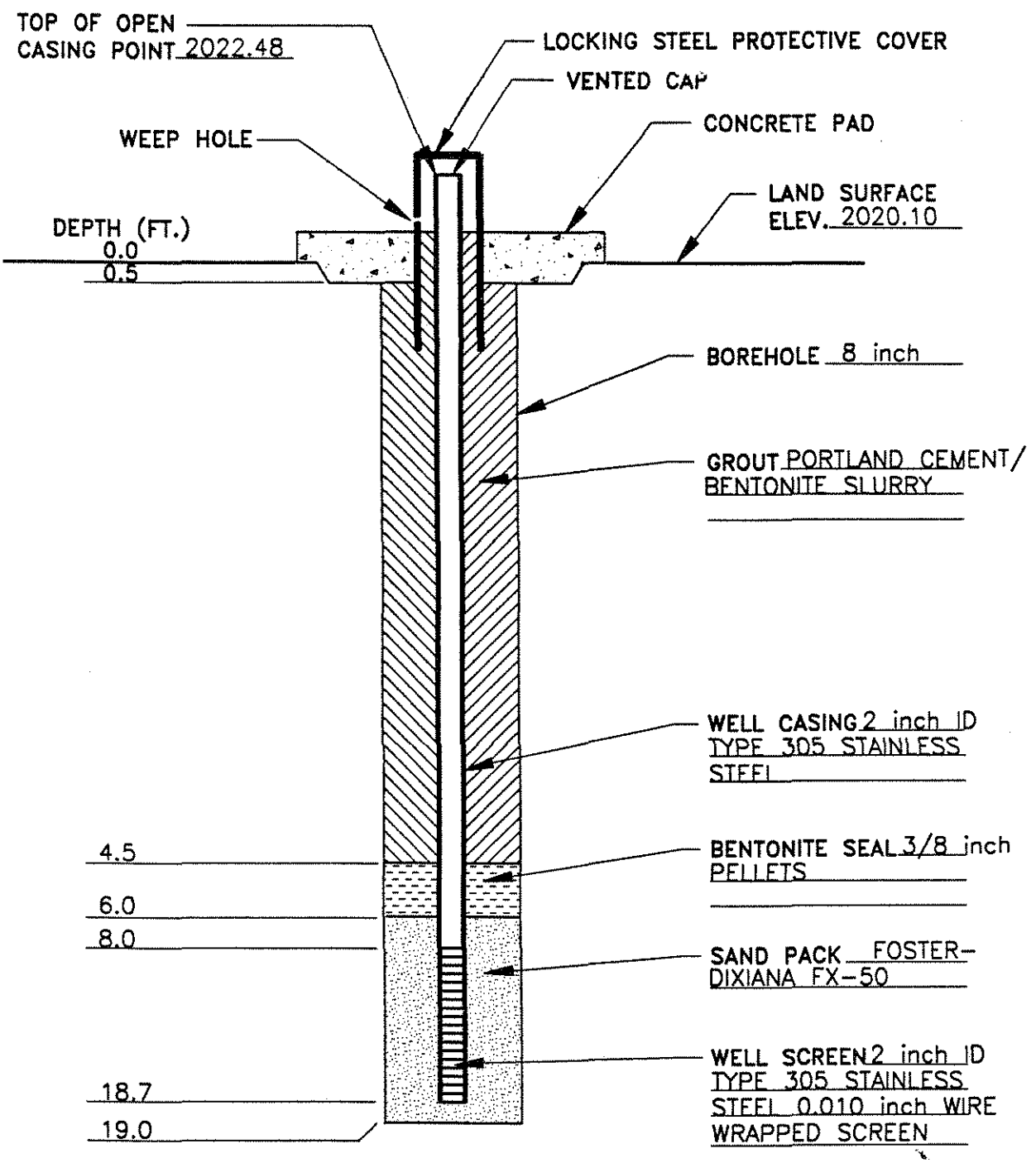

WELL CONSTRUCTION DIAGRAM

Not To Scale

PROJECT SKF-ASHEVILLE
PROJECT NO. 70144.05
WELL NO. MW-28
DATE INSTALLED 6/14/95
DRILLING CONTRACTOR AE DRILLING SERVICES
RMT GEOLOGIST M.G. JONES

/WEL-DIA/SKFMW28A

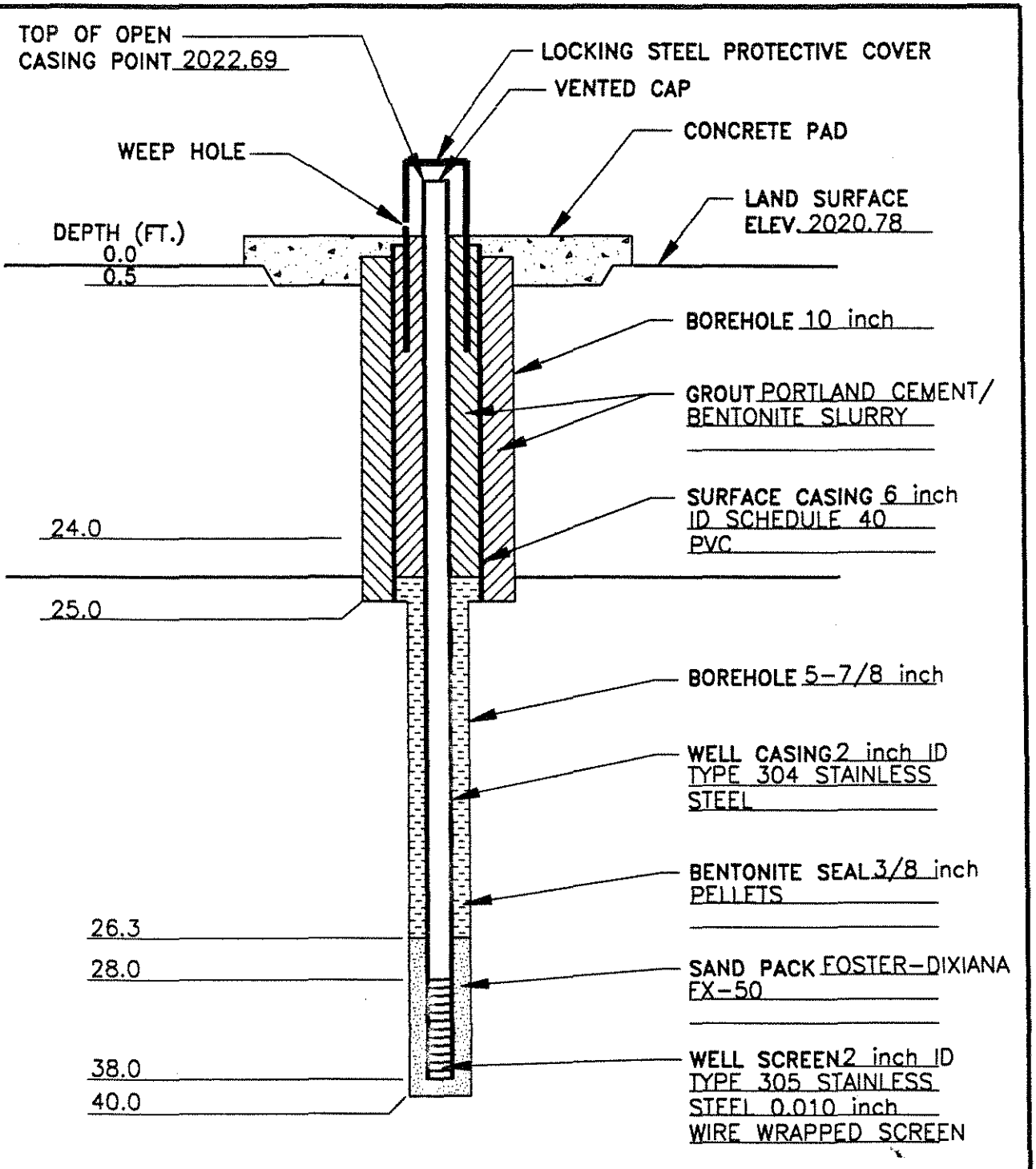

WELL CONSTRUCTION DIAGRAM

Not To Scale

PROJECT SKF-ASHEVILLE
PROJECT NO. 70144.05
WELL NO. MW-28A
DATE INSTALLED 6-19-95
DRILLING CONTRACTOR AE DRILLING SERVICES
RMT GEOLOGIST K.A. LAUBER

RMT

LOG OF TEST BORING

RMT

PROJECT NAME	SKF ASHEVILLE	BORING NO.	RW-1
LOCATION	J.L. dE BALL GIRMES FACILITY	SHEET NO.	1 OF 2
CONTRACTOR	A E DRILLING, INC.	PROJECT NO.	70144.05
DRILLING METHOD	AIR HAMMER	INSTALLATION	
		SURFACE ELEV.	2033.1
		BOREHOLE DIA.	10/5.875 IN.

SAMPLING NOTES						VISUAL CLASSIFICATION AND GENERAL OBSERVATIONS
INTERVAL		RECOVERY		MOISTURE		
NO.	TYPE	BLOWS	%	%	DEPTH	
					5	- no samples collected to 11.0 ft.
1	GRAB				10	
						SILTY SAND (SM) - dark green brown; fine to medium grained; weathered amphibolite. [Saprolite]
					15	AMPHIBOLITE - dark green - black hornblende w/10% feldspar. - penetration rate down to 1.0 ft./2 min.
2	GRAB				20	
3	GRAB				25	- as above. - first water at 25.5 ft.; steady mist.
4	GRAB				30	- large void or fracture; lost circulation from 26.0 to 27.0 ft.; air coming out of ground 35.0 ft. from rig. - fracture with water. - as above.
5	GRAB				35	- borehole making steady water. - fracture. - as above. - fracture. - lost circulation briefly at 37.5 ft. - mostly fractured from 38.0 to 43.0 ft.

GENERAL NOTES

DATE STARTED JUN 14 95
DATE COMPLETED JUN 15 95
RIG CME-750
CREW CHIEF M. KING
LOGGED MGJ/KAL CHECKED KAL

WATER LEVEL OBSERVATIONS

WHILE DRILLING ▽ 25.5 FT.
AT COMPLETION ▼
AFTER DRILLING
CAVE-IN: DATE/TIME _____ DEPTH _____
WATER: DATE/TIME _____ DEPTH _____

LOG OF TEST BORING

PROJECT NAME	SKF ASHEVILLE	BORING NO.	RW-1
LOCATION	J.L. dE BALL GIRMES FACILITY	SHEET NO.	2 OF 2
CONTRACTOR	A E DRILLING, INC.	PROJECT NO.	70144.05
DRILLING METHOD	AIR HAMMER	INSTALLATION	
		SURFACE ELEV.	2033.1
		BOREHOLE DIA.	10/5.875 IN.

SAMPLING NOTES						VISUAL CLASSIFICATION AND GENERAL OBSERVATIONS
INTERVAL		RECOVERY		MOISTURE		
NO.	TYPE	BLOWS	%	%	DEPTH	
						- borehole makes copious amount of water.
						BOREHOLE TERMINATED AT 43.0 FEET
					45	
					50	
					55	
					60	
					65	
					70	
					75	
					80	
					85	

LOG OF TEST BORING

RMT

PROJECT NAME	SKF ASHEVILLE	BORING NO.	RW-2
LOCATION	J.L. dE BALL GIRMES FACILITY	SHEET NO.	1 OF 2
CONTRACTOR	A E DRILLING, INC.	PROJECT NO.	70144.05
DRILLING METHOD	AIR HAMMER	INSTALLATION	
		SURFACE ELEV.	2070.1
		BOREHOLE DIA.	10/5.875 IN.

SAMPLING NOTES						VISUAL CLASSIFICATION AND GENERAL OBSERVATIONS
INTERVAL		RECOVERY		MOISTURE		
NO.	TYPE	BLOWS	%	%	DEPTH	
					5	SILT (ML) - reddish brown; micaceous; rock fragments, felsic gneiss, some feldspar grains. [Saprolite]
1	GRAB					
					10	SILTY SAND (SM) - light brown; micaceous; some quartz fragments (1.0-2.0 cm); some rock fragments; micaceous with micas present in seams and sand-size angular quartz grains, some feldspar grains. [Saprolite]
2	GRAB					
					15	
3	GRAB					SILTY SAND (SM) - light brown; sand size grains of angular quartz predominant; micaceous; no rock fragments. [Saprolite]
					20	GNEISS - light brown; weathered; composed of primarily quartz with some feldspars and mica (5-10%) and heavy minerals.
4	GRAB				25	
					30	
5	GRAB					GNEISS - light brown; weathered; fine grained; angular quartz; feldspars (80%); micas (10-15%); heavy minerals (5-10%).
					35	FELSIC GNEISS - tan to white; very fine sand; quartz (60-70%); feldspar (30-40%); minor mica.
6	GRAB					GNEISS - light brown; fine grained; micaceous; quartz

GENERAL NOTES

DATE STARTED	JUN 12 95
DATE COMPLETED	JUN 13 95
RIG	CME-750
CREW CHIEF	M. KING
LOGGED	MGJ
CHECKED	KAL

WATER LEVEL OBSERVATIONS

WHILE DRILLING	40.0 FT.	
AT COMPLETION	17.5 FT.	
AFTER DRILLING		
CAVE-IN: DATE/TIME		DEPTH
WATER: DATE/TIME		DEPTH

LOG OF TEST BORING

RMT

PROJECT NAME	SKF ASHEVILLE	BORING NO.	RW-2
LOCATION	J.L. dE BALL GIRMES FACILITY	SHEET NO.	2 OF 2
CONTRACTOR	A E DRILLING, INC.	PROJECT NO.	70144.05
DRILLING METHOD	AIR HAMMER	INSTALLATION	
		SURFACE ELEV.	2070.1
		BOREHOLE DIA.	10/5.875 IN.

SAMPLING NOTES							VISUAL CLASSIFICATION AND GENERAL OBSERVATIONS
INTERVAL		RECOVERY		MOISTURE			
NO.	TYPE	BLOWS	%	%	DEPTH		
							(60-70%); feldspar (10-20%); mica (10-20%).
7	GRAB						PEGMATITE - quartz fragments; fracture produced some water.
8	GRAB				45		FELSIC GNEISS - tan fine sand; quartz (80%); feldspar (15%); mica (5%).
							GNEISS - fine grained; light brown; quartz (70%); feldspar (10%); mica and heavy minerals (20%).
9	GRAB				50		AMPHIBOLITE - dark brown; silty fine sand; quartz (40%); heavy minerals (30-40%); feldspar (20-30%).
10	GRAB						- fracture.
							BORING TERMINATED AT 53.0 FEET
					55		
					60		
					65		
					70		
					75		
					80		
					85		

LOG OF TEST BORING

PROJECT NAME	SKF ASHEVILLE	BORING NO.	MW-28
LOCATION	J.L. dE BALL GIRMES FACILITY	SHEET NO.	1 OF 1
CONTRACTOR	A E DRILLING, INC.	PROJECT NO.	70144.05
DRILLING METHOD	HOLLOW STEM AUGER	INSTALLATION	
		SURFACE ELEV.	2020.1
		BOREHOLE DIA.	8 IN.

SAMPLING NOTES						VISUAL CLASSIFICATION AND GENERAL OBSERVATIONS
INTERVAL		RECOVERY		MOISTURE		
NO.	TYPE	BLOWS	%	%	DEPTH	
						SILTY SAND (SM) - brown; micaceous. [Fill]
1	SS	3-4 3-3	78			
					5	SILTY SAND (SM) - fine grained; some mica and rounded quartz gravel; gray. [Alluvium]
2	SS	1-1 1-1	100			
					10	
						GRAVEL (GP) - rounded cobbles; very moist. [Alluvium]
3	SS	8-26 29-28	75			SILTY SAND (SM) - gray-brown; micaceous; wet. [Saprolite]
					15	
4	SS	13-26 50/5"	75			- as above.
					20	BORING TERMINATED AT 19.0 FEET
					25	
					30	
					35	

GENERAL NOTES

DATE STARTED	JUN 14 95
DATE COMPLETED	JUN 14 95
RIG	CME-750
CREW CHIEF	M. KING
LOGGED	MGJ
CHECKED	KAL

WATER LEVEL OBSERVATIONS

WHILE DRILLING	12.0 FT.	
AT COMPLETION		
AFTER DRILLING		
CAVE-IN: DATE/TIME		DEPTH
WATER: DATE/TIME		DEPTH

LOG OF TEST BORING

PROJECT NAME	SKF ASHEVILLE	BORING NO.	MW-28A
LOCATION	J.L. dE BALL GIRMES FACILITY	SHEET NO.	1 OF 1
CONTRACTOR	A E DRILLING, INC.	PROJECT NO.	70144.05
DRILLING METHOD	HSA/AIR HAMMER	INSTALLATION	
		SURFACE ELEV.	2020.7
		BOREHOLE DIA.	10/5.875 IN.

SAMPLING NOTES						VISUAL CLASSIFICATION AND GENERAL OBSERVATIONS
INTERVAL		RECOVERY		MOISTURE		
NO.	TYPE	BLOWS	%	%	DEPTH	
						Driller used posthole digger to 5.0 ft.
1	SS	NA			5	SILTY SAND (SM) - fine grained; well sorted; micaceous; gray; occasional rounded quartz cobbles. [Alluvium]
2	GRAB				10	GRAVEL (GP) - pea size to 3/4 in. cobbles; rounded; quartz; wet; matrix is fine grained; silty; micaceous sand. [Alluvium]
						SILTY SAND (SM) - fine grained. [Saprolite]
					15	
3	GRAB				20	GRANITE GNEISS - competent bedrock; quartz, feldspar, biotite; some muscovite; few red garnets (< 1.0mm).
					25	
4	GRAB				30	- water bearing fracture at 29.0 ft; returns are bright orange at 29.5 ft.
5	GRAB				35	- returns are very mica rich (predominantly muscovite mica); borehole makes large amounts of water from 35.0 to 37.0 ft.
					40	BORING TERMINATED AT 40.0 FEET

GENERAL NOTES

DATE STARTED	JUN 14 95
DATE COMPLETED	JUN 14 95
RIG	CME-750
CREW CHIEF	M. KING
LOGGED	KAL/MGJ CHECKED KAL

WATER LEVEL OBSERVATIONS

WHILE DRILLING	12.0 FT.	
AT COMPLETION		
AFTER DRILLING		
CAVE-IN: DATE/TIME		DEPTH
WATER: DATE/TIME		DEPTH

Appendix B

Laboratory Reports for Ground Water Samples Collected in June 1995 and January/February 1996

GROUND WATER SAMPLES COLLECTED

JUNE 1995

RMT LABORATORIES 744 HEARTLAND TRAIL MADISON, WI 53717-1934 P.O. BOX 8923 MADISON, WI 53708-8923 608/831-4444 608/831-7530 FAX

PROJECT NAME: SKF
PROJECT NUMBER: 70144.05
LAB SAMPLE NUMBER: 7432-016
STATION ID: MW-1
WI DNR LAB ID: 113138520

REPORT DATE: 07/10/95
COLLECTION DATE: 06/21/95
ANALYSIS DATE: 06/29/95
METHOD: 8021

VOLATILE ORGANICS ANALYSIS REPORT

COMPOUND	RESULT	EQL	CODE	UNITS
1,2-Dichloroethene, total	<2.0	2.0		ug/L
Trichloroethene	<1.0	1.0		ug/L
Vinyl chloride	<1.0	1.0		ug/L

RMT LABORATORIES 744 HEARTLAND TRAIL MADISON, WI 53717-1934 P.O. BOX 8923 MADISON, WI 53708-8923 608/831-4444 608/831-7530 FAX

PROJECT NAME: SKF
PROJECT NUMBER: 70144.05
LAB SAMPLE NUMBER: 7452-016
STATION ID: MW-2
WI DNR LAB ID: 113138520

REPORT DATE: 07/12/95
COLLECTION DATE: 06/23/95
ANALYSIS DATE: 06/30/95
METHOD: 8021

VOLATILE ORGANICS ANALYSIS REPORT

COMPOUND	RESULT	EQL	CODE	UNITS
1,2-Dichloroethene, total	12	2.0		ug/L
Trichloroethene	58	5.0	D	ug/L
Vinyl chloride	<1.0	1.0		ug/L

D = Analyte value from a diluted analysis dated 07/03/95

RMT LABORATORIES 744 HEARTLAND TRAIL MADISON, WI 53717-1934 P.O. BOX 8923 MADISON, WI 53708-8923 608/831-4444 608/831-7530 FAX

PROJECT NAME: SKF
PROJECT NUMBER: 70144.05
LAB SAMPLE NUMBER: 7452-007
STATION ID: MW-4
WI DNR LAB ID: 113138520

REPORT DATE: 07/12/95
COLLECTION DATE: 06/22/95
ANALYSIS DATE: 06/29/95
METHOD: 8021

VOLATILE ORGANICS ANALYSIS REPORT

COMPOUND	RESULT	EQL	CODE	UNITS
1,2-Dichloroethene, total	670	200	D	ug/L
Trichloroethene	950	100	D	ug/L
Vinyl chloride	<1.0	1.0		ug/L

D = Analyte value from a diluted analysis dated 06/30/95

RMT LABORATORIES 744 HEARTLAND TRAIL MADISON, WI 53717-1934 P.O. BOX 8923 - MADISON, WI 53708-8923 - 608/831-4444 - 608/831-7530 FAX

PROJECT NAME: SKF
PROJECT NUMBER: 70144.05
LAB SAMPLE NUMBER: 7452-010
STATION ID: MW-5
WI DNR LAB ID: 113138520

REPORT DATE: 07/12/95
COLLECTION DATE: 06/22/95
ANALYSIS DATE: 06/30/95
METHOD: 8021

VOLATILE ORGANICS ANALYSIS REPORT

COMPOUND	RESULT	EQL	CODE	UNITS
1,2-Dichloroethene, total	85	2.0	E	ug/L
Trichloroethene	5800	200	D	ug/L
Vinyl chloride	<1.0	1.0		ug/L

D = Analyte value from a diluted analysis dated 07/05/95

RMT LABORATORIES 744 HEARTLAND TRAIL MADISON, WI 53717-1934 P.O. BOX 8923 MADISON, WI 53708-8923 608/831-4444 608/831-7530 FAX

PROJECT NAME: SKF
PROJECT NUMBER: 70144.05
LAB SAMPLE NUMBER: 7432-017
STATION ID: MW-6
WI DNR LAB ID: 113138520

REPORT DATE: 07/10/95
COLLECTION DATE: 06/21/95
ANALYSIS DATE: 06/29/95
METHOD: 8021

VOLATILE ORGANICS ANALYSIS REPORT

COMPOUND	RESULT	EQL	CODE	UNITS
1,2-Dichloroethene, total	<2.0	2.0		ug/L
Trichloroethene	<1.0	1.0		ug/L
Vinyl chloride	<1.0	1.0		ug/L

RMT LABORATORIES 744 HEARTLAND TRAIL MADISON, WI 53717-1934 P.O. BOX 8923 MADISON, WI 53708-8923 608/831-4444 608/831-7530 FAX

PROJECT NAME: SKF
PROJECT NUMBER: 70144.05
LAB SAMPLE NUMBER: 7452-019
STATION ID: MW-7
WI DNR LAB ID: 113138520

REPORT DATE: 07/12/95
COLLECTION DATE: 06/23/95
ANALYSIS DATE: 07/03/95
METHOD: 8021

VOLATILE ORGANICS ANALYSIS REPORT

COMPOUND	RESULT	EQL	CODE	UNITS
1,2-Dichloroethene, total	<2.0	2.0		ug/L
Trichloroethene	<1.0	1.0		ug/L
Vinyl chloride	<1.0	1.0		ug/L

RMT LABORATORIES 744 HEARTLAND TRAIL MADISON, WI 53717-1934 P.O. BOX 8923 MADISON, WI 53708-8923 608/831-4444 608/831-7530 FAX

PROJECT NAME: SKF
PROJECT NUMBER: 70144.05
LAB SAMPLE NUMBER: 7452-008
STATION ID: MW-8
WI DNR LAB ID: 113138520

REPORT DATE: 07/12/95
COLLECTION DATE: 06/22/95
ANALYSIS DATE: 06/29/95
METHOD: 8021

VOLATILE ORGANICS ANALYSIS REPORT

COMPOUND	RESULT	EQL	CODE	UNITS
1,2-Dichloroethene, total	<2.0	2.0		ug/L
Trichloroethene	<1.0	1.0		ug/L
Vinyl chloride	<1.0	1.0		ug/L

RMT LABORATORIES 744 HEARTLAND TRAIL MADISON, WI 53717-1934 P.O. BOX 8923 MADISON, WI 53708-8923 608/831-4444 - 608/831-7530 FAX

PROJECT NAME: SKF
PROJECT NUMBER: 70144.05
LAB SAMPLE NUMBER: 7452-009
STATION ID: MW-9
WI DNR LAB ID: 113138520

REPORT DATE: 07/12/95
COLLECTION DATE: 06/22/95
ANALYSIS DATE: 06/29/95
METHOD: 8021

VOLATILE ORGANICS ANALYSIS REPORT

COMPOUND	RESULT	EQL	CODE	UNITS
1,2-Dichloroethene, total	45	2.0	E	ug/L
Trichloroethene	1800	100	D	ug/L
Vinyl chloride	<1.0	1.0		ug/L

D - Analyte value from a diluted analysis dated 06/30/95

RMT LABORATORIES 744 HEARTLAND TRAIL MADISON, WI 53717-1934 P.O. BOX 8923 MADISON, WI 53708-8923 608/831-4444 608/831-7530 FAX

PROJECT NAME: SKF
PROJECT NUMBER: 70144.05
LAB SAMPLE NUMBER: 7452-011
STATION ID: MW-10
WI DNR LAB ID: 113138520

REPORT DATE: 07/12/95
COLLECTION DATE: 06/22/95
ANALYSIS DATE: 06/30/95
METHOD: 8021

VOLATILE ORGANICS ANALYSIS REPORT

COMPOUND	RESULT	EQL	CODE	UNITS
1,2-Dichloroethene, total	600	200	D	ug/L
Trichloroethene	42	1.0	E	ug/L
Vinyl chloride	<1.0	1.0		ug/L

D = Analyte value from a diluted analysis dated 06/30/95

RMT LABORATORIES 744 HEARTLAND TRAIL · MADISON, WI 53717-1934 P.O. BOX 8923 MADISON, WI 53708-8923 · 608/831-4444 · 608/831-7530 FAX

PROJECT NAME: SKF
PROJECT NUMBER: 70144.05
LAB SAMPLE NUMBER: 7452-004
STATION ID: MW-11
WI DNR LAB ID: 113138520

REPORT DATE: 07/12/95
COLLECTION DATE: 06/22/95
ANALYSIS DATE: 06/29/95
METHOD: 8021

VOLATILE ORGANICS ANALYSIS REPORT

COMPOUND	RESULT	EQL	CODE	UNITS
1,2-Dichloroethene, total	<2.0	2.0		ug/L
Trichloroethene	1.6	1.0		ug/L
Vinyl chloride	<1.0	1.0		ug/L

RMT LABORATORIES 744 HEARTLAND TRAIL MADISON, WI 53717-1934 P.O. BOX 8923 MADISON, WI 53708-8923 608/831-4444 608/831-7530 FAX

PROJECT NAME: SKF
PROJECT NUMBER: 70144.05
LAB SAMPLE NUMBER: 7432-015
STATION ID: MW-12
WI DNR LAB ID: 113138520

REPORT DATE: 07/10/95
COLLECTION DATE: 06/21/95
ANALYSIS DATE: 06/29/95
METHOD: 8021

VOLATILE ORGANICS ANALYSIS REPORT

COMPOUND	RESULT	EQL	CODE	UNITS
1,2-Dichloroethene, total	<2.0	2.0		ug/L
Trichloroethene	<1.0	1.0		ug/L
Vinyl chloride	<1.0	1.0		ug/L

RMT LABORATORIES 744 HEARTLAND TRAIL MADISON, WI 53717-1934 P.O. BOX 8923 MADISON, WI 53708-8923 608/831-4444 608/831-7530 FAX

PROJECT NAME: SKF
PROJECT NUMBER: 70144.05
LAB SAMPLE NUMBER: 7432-010
STATION ID: MW-13
WI DNR LAB ID: 113138520

REPORT DATE: 07/10/95
COLLECTION DATE: 06/21/95
ANALYSIS DATE: 06/28/95
METHOD: 8021

VOLATILE ORGANICS ANALYSIS REPORT

COMPOUND	RESULT	EQL	CODE	UNITS
1,2-Dichloroethene, total	3.0	2.0		ug/L
Trichloroethene	<1.0	1.0		ug/L
Vinyl chloride	24	1.0		ug/L

RMT LABORATORIES 744 HEARTLAND TRAIL MADISON, WI 53717-1934 P.O. BOX 8923 MADISON, WI 53708-8923 608/831-4444 608/831-7530 FAX

PROJECT NAME: SKF
PROJECT NUMBER: 70144.05
LAB SAMPLE NUMBER: 7452-018
STATION ID: MW-14
WI DNR LAB ID: 113138520

REPORT DATE: 07/12/95
COLLECTION DATE: 06/23/95
ANALYSIS DATE: 06/30/95
METHOD: 8021

VOLATILE ORGANICS ANALYSIS REPORT

COMPOUND	RESULT	EQL	CODE	UNITS
1,2-Dichloroethene, total	<2.0	2.0		ug/L
Trichloroethene	80	5.0	D	ug/L
Vinyl chloride	<1.0	1.0		ug/L

D = Analyte value from a diluted analysis dated 07/03/95

RMT LABORATORIES 744 HEARTLAND TRAIL MADISON, WI 53717-1934 P.O. BOX 8923 MADISON, WI 53708-8923 608/831-4444 608/831-7530 FAX

PROJECT NAME: SKF
PROJECT NUMBER: 70144.05
LAB SAMPLE NUMBER: 7432-012
STATION ID: MW-15
WI DNR LAB ID: 113138520

REPORT DATE: 07/10/95
COLLECTION DATE: 06/21/95
ANALYSIS DATE: 06/29/95
METHOD: 8021

VOLATILE ORGANICS ANALYSIS REPORT

COMPOUND	RESULT	EQL	CODE	UNITS
1,2-Dichloroethene, total	<2.0	2.0		ug/L
Trichloroethene	<1.0	1.0		ug/L
Vinyl chloride	<1.0	1.0		ug/L

RMT LABORATORIES 744 HEARTLAND TRAIL MADISON, WI 53717-1934 P.O. BOX 8923 MADISON, WI 53708-8923 608/831-4444 608/831-7530 FAX

PROJECT NAME: SKF
PROJECT NUMBER: 70144.05
LAB SAMPLE NUMBER: 7452-005
STATION ID: MW-15A
WI DNR LAB ID: 113138520

REPORT DATE: 07/12/95
COLLECTION DATE: 06/22/95
ANALYSIS DATE: 06/29/95
METHOD: 8021

VOLATILE ORGANICS ANALYSIS REPORT

COMPOUND	RESULT	EQL	CODE	UNITS
1,2-Dichloroethene, total	<2.0	2.0		ug/L
Trichloroethene	2.6	1.0		ug/L
Vinyl chloride	<1.0	1.0		ug/L

RMT LABORATORIES 744 HEARTLAND TRAIL MADISON, WI 53717-1934 P.O. BOX 8923 MADISON, WI 53708-8923 608/831-4444 608/831-7530 FAX

PROJECT NAME: SKF
PROJECT NUMBER: 70144.05
LAB SAMPLE NUMBER: 7452-013
STATION ID: DUP-02 (MW-15A)
WI DNR LAB ID: 113138520

REPORT DATE: 07/12/95
COLLECTION DATE:
ANALYSIS DATE: 06/30/95
METHOD: 8021

VOLATILE ORGANICS ANALYSIS REPORT

COMPOUND	RESULT	EQL	CODE	UNITS
1,2-Dichloroethene, total	<2.0	2.0		ug/L
Trichloroethene	2.4	1.0		ug/L
Vinyl chloride	<1.0	1.0		ug/L

RMT LABORATORIES 744 HEARTLAND TRAIL MADISON, WI 53717-1934 P.O. BOX 8923 MADISON, WI 53708-8923 608/831-4444 608/831-7530 FAX

PROJECT NAME: SKF
PROJECT NUMBER: 70144.05
LAB SAMPLE NUMBER: 7432-014
STATION ID: MW-16
WI DNR LAB ID: 113138520

REPORT DATE: 07/10/95
COLLECTION DATE: 06/21/95
ANALYSIS DATE: 06/29/95
METHOD: 8021

VOLATILE ORGANICS ANALYSIS REPORT

COMPOUND	RESULT	EQL	CODE	UNITS
1,2-Dichloroethene, total	<2.0	2.0		ug/L
Trichloroethene	1.2	1.0		ug/L
Vinyl chloride	<1.0	1.0		ug/L

RMT LABORATORIES 744 HEARTLAND TRAIL MADISON, WI 53717-1934 P.O. BOX 8923 MADISON, WI 53708-8923 608/831-4444 608/831-7530 FAX

PROJECT NAME: SKF
PROJECT NUMBER: 70144.05
LAB SAMPLE NUMBER: 7452-006
STATION ID: MW-16A
WI DNR LAB ID: 113138520

REPORT DATE: 07/12/95
COLLECTION DATE: 06/22/95
ANALYSIS DATE: 06/29/95
METHOD: 8021

VOLATILE ORGANICS ANALYSIS REPORT

COMPOUND	RESULT	EQL	CODE	UNITS
1,2-Dichloroethene, total	<2.0	2.0		ug/L
Trichloroethene	<1.0	1.0		ug/L
Vinyl chloride	<1.0	1.0		ug/L

RMT LABORATORIES 744 HEARTLAND TRAIL MADISON, WI 53717-1934 P.O. BOX 8923 MADISON, WI 53708-8923 608/831-4444 608/831-7530 FAX

PROJECT NAME: SKF
PROJECT NUMBER: 70144.05
LAB SAMPLE NUMBER: 7432-011
STATION ID: MW-17
WI DNR LAB ID: 113138520

REPORT DATE: 07/10/95
COLLECTION DATE: 06/21/95
ANALYSIS DATE: 06/29/95
METHOD: 8021

VOLATILE ORGANICS ANALYSIS REPORT

COMPOUND	RESULT	EQL	CODE	UNITS
1,2-Dichloroethene, total	<2.0	2.0		ug/L
Trichloroethene	3.9	1.0		ug/L
Vinyl chloride	<1.0	1.0		ug/L

RMT LABORATORIES 744 HEARTLAND TRAIL MADISON, WI 53717-1934 P.O. BOX 8923 MADISON, WI 53708-8923 608/831-4444 608/831-7530 FAX

PROJECT NAME: SKF
PROJECT NUMBER: 70144.05
LAB SAMPLE NUMBER: 7432-007
STATION ID: MW-18
WI DNR LAB ID: 113138520

REPORT DATE: 07/10/95
COLLECTION DATE: 06/20/96
ANALYSIS DATE: 06/29/95
METHOD: 8021

VOLATILE ORGANICS ANALYSIS REPORT

COMPOUND	RESULT	EQL	CODE	UNITS
1,2-Dichloroethene, total	2.6	2.0		ug/L
Trichloroethene	<1.0	1.0		ug/L
Vinyl chloride	<1.0	1.0		ug/L

RMT LABORATORIES 744 HEARTLAND TRAIL MADISON, WI 53717-1934 P.O. BOX 8923 MADISON, WI 53708-8923 608/831-4444 608/831-7530 FAX

PROJECT NAME: SKF
PROJECT NUMBER: 70144.05
LAB SAMPLE NUMBER: 7432-013
STATION ID: DUP-01 (MW-18)
WI DNR LAB ID: 113138520

REPORT DATE: 07/10/95
COLLECTION DATE:
ANALYSIS DATE: 06/29/95
METHOD: 8021

VOLATILE ORGANICS ANALYSIS REPORT

COMPOUND	RESULT	EQL	CODE	UNITS
1,2-Dichloroethene, total	2.9	2.0		ug/L
Trichloroethene	<1.0	1.0		ug/L
Vinyl chloride	<1.0	1.0		ug/L

RMT LABORATORIES 744 HEARTLAND TRAIL MADISON, WI 53717-1934 P.O. BOX 8923 MADISON, WI 53708-8923 608/831-4444 608/831-7530 FAX

PROJECT NAME: SKF
PROJECT NUMBER: 70144.05
LAB SAMPLE NUMBER: 7452-022
STATION ID: MW-19
WI DNR LAB ID: 113138520

REPORT DATE: 07/12/95
COLLECTION DATE: 06/23/95
ANALYSIS DATE: 07/03/95
METHOD: 8021

VOLATILE ORGANICS ANALYSIS REPORT

COMPOUND	RESULT	EQL	CODE	UNITS
1,2-Dichloroethene, total	8.5	2.0		ug/L
Trichloroethene	110	50	D	ug/L
Vinyl chloride	<1.0	1.0		ug/L

D = Analyte value from a diluted analysis dated 07/05/95

RMT LABORATORIES 744 HEARTLAND TRAIL MADISON, WI 53717-1934 P.O. BOX 8923 MADISON, WI 53708-8923 608/831-4444 608/831-7530 FAX

PROJECT NAME: SKF
PROJECT NUMBER: 70144.05
LAB SAMPLE NUMBER: 7432-009
STATION ID: MW-20
WI DNR LAB ID: 113138520

REPORT DATE: 07/10/95
COLLECTION DATE: 06/21/95
ANALYSIS DATE: 06/28/95
METHOD: 8021

VOLATILE ORGANICS ANALYSIS REPORT

COMPOUND	RESULT	EQL	CODE	UNITS
1,2-Dichloroethene, total	2.9	2.0		ug/L
Trichloroethene	<1.0	1.0		ug/L
Vinyl chloride	<1.0	1.0		ug/L

RMT LABORATORIES 744 HEARTLAND TRAIL MADISON, WI 53717-1934 P.O. BOX 8923 MADISON, WI 53708-8923 608/831-4444 608/831-7530 FAX

PROJECT NAME: SKF
PROJECT NUMBER: 70144.05
LAB SAMPLE NUMBER: 7432-006
STATION ID: MW-21
WI DNR LAB ID: 113138520

REPORT DATE: 07/10/95
COLLECTION DATE: 06/20/96
ANALYSIS DATE: 06/28/95
METHOD: 8021

VOLATILE ORGANICS ANALYSIS REPORT

COMPOUND	RESULT	EQL	CODE	UNITS
1,2-Dichloroethene, total	250	20	D	ug/L
Trichloroethene	350	10	D	ug/L
Vinyl chloride	2.5	1.0		ug/L

D = Analyte value from a diluted analysis dated 06/29/95

RMT LABORATORIES 744 HEARTLAND TRAIL MADISON, WI 53717-1934 P.O. BOX 8923 MADISON, WI 53708-8923 608/831-4444 608/831-7530 FAX

PROJECT NAME: SKF
PROJECT NUMBER: 70144.05
LAB SAMPLE NUMBER: 7452-020
STATION ID: MW-22
WI DNR LAB ID: 113138520

REPORT DATE: 07/12/95
COLLECTION DATE: 06/23/95
ANALYSIS DATE: 07/03/95
METHOD: 8021

VOLATILE ORGANICS ANALYSIS REPORT

COMPOUND	RESULT	EQL	CODE	UNITS
1,2-Dichloroethene, total	<2.0	2.0		ug/L
Trichloroethene	<1.0	1.0		ug/L
Vinyl chloride	<1.0	1.0		ug/L

RMT LABORATORIES 744 HEARTLAND TRAIL MADISON, WI 53717-1934 P.O. BOX 8923 MADISON, WI 53708-8923 608/831-4444 608/831-7530 FAX

PROJECT NAME: SKF
PROJECT NUMBER: 70144.05
LAB SAMPLE NUMBER: 7432-002
STATION ID: MW-23
WI DNR LAB ID: 113138520

REPORT DATE: 07/10/95
COLLECTION DATE: 06/20/96
ANALYSIS DATE: 06/29/95
METHOD: 8021

VOLATILE ORGANICS ANALYSIS REPORT

COMPOUND	RESULT	EQL	CODE	UNITS
1,2-Dichloroethene, total	380	100		ug/L
Trichloroethene	11000	500	D	ug/L
Vinyl chloride	<50	50		ug/L

D = Analyte value from a diluted analysis dated 07/03/95

RMT LABORATORIES 744 HEARTLAND TRAIL MADISON, WI 53717-1934 P.O. BOX 8923 MADISON, WI 53708-8923 608/831-4444 608/831-7530 FAX

PROJECT NAME: SKF
PROJECT NUMBER: 70144.05
LAB SAMPLE NUMBER: 7432-004
STATION ID: MW-24
WI DNR LAB ID: 113138520

REPORT DATE: 07/10/95
COLLECTION DATE: 06/20/96
ANALYSIS DATE: 06/28/95
METHOD: 8021

VOLATILE ORGANICS ANALYSIS REPORT

COMPOUND	RESULT	EQL	CODE	UNITS
1,2-Dichloroethene, total	3.0	2.0		ug/L
Trichloroethene	220	10	D	ug/L
Vinyl chloride	<1.0	1.0		ug/L

D = Analyte value from a diluted analysis dated 06/29/95

RMT LABORATORIES 744 HEARTLAND TRAIL MADISON, WI 53717-1934 P.O. BOX 8923 MADISON, WI 53708-8923 608/831-4444 608/831-7530 FAX

PROJECT NAME: SKF
PROJECT NUMBER: 70144.05
LAB SAMPLE NUMBER: 7432-003
STATION ID: MW-26
WI DNR LAB ID: 113138520

REPORT DATE: 07/10/95
COLLECTION DATE: 06/20/96
ANALYSIS DATE: 06/29/95
METHOD: 8021

VOLATILE ORGANICS ANALYSIS REPORT

COMPOUND	RESULT	EQL	CODE	UNITS
1,2-Dichloroethene, total	9.8	2.0		ug/L
Trichloroethene	9.1	1.0		ug/L
Vinyl chloride	<1.0	1.0		ug/L

RMT LABORATORIES 744 HEARTLAND TRAIL MADISON, WI 53717-1934 P.O. BOX 8923 MADISON, WI 53708-8923 608/831-4444 608/831-7530 FAX

PROJECT NAME: SKF
PROJECT NUMBER: 70144.05
LAB SAMPLE NUMBER: 7432-008
STATION ID: MW-27
WI DNR LAB ID: 113138520

REPORT DATE: 07/10/95
COLLECTION DATE: 06/20/96
ANALYSIS DATE: 06/28/95
METHOD: 8021

VOLATILE ORGANICS ANALYSIS REPORT

COMPOUND	RESULT	EQL	CODE	UNITS
1,2-Dichloroethene, total	<2.0	2.0		ug/L
Trichloroethene	<1.0	1.0		ug/L
Vinyl chloride	<1.0	1.0		ug/L

RMT LABORATORIES 744 HEARTLAND TRAIL MADISON, WI 53717-1934 P.O. BOX 8923 MADISON, WI 53708-8923 608/831-4444 608/831-7530 FAX

PROJECT NAME: SKF
PROJECT NUMBER: 70144.05
LAB SAMPLE NUMBER: 7452-021
STATION ID: MW-28
WI DNR LAB ID: 113138520

REPORT DATE: 07/12/95
COLLECTION DATE: 06/23/95
ANALYSIS DATE: 07/03/95
METHOD: 8021

VOLATILE ORGANICS ANALYSIS REPORT

COMPOUND	RESULT	EQL	CODE	UNITS
1,2-Dichloroethene, total	<2.0	2.0		ug/L
Trichloroethene	<1.0	1.0		ug/L
Vinyl chloride	<1.0	1.0		ug/L

RMT LABORATORIES 744 HEARTLAND TRAIL MADISON, WI 53717-1934 P.O. BOX 8923 MADISON, WI 53708-8923 608/831-4444 608/831-7530 FAX

PROJECT NAME: SKF
PROJECT NUMBER: 70144.05
LAB SAMPLE NUMBER: 7452-023
STATION ID: MW-28A
WI DNR LAB ID: 113138520

REPORT DATE: 07/12/95
COLLECTION DATE: 06/23/95
ANALYSIS DATE: 07/05/95
METHOD: 8021

VOLATILE ORGANICS ANALYSIS REPORT

COMPOUND	RESULT	EQL	CODE	UNITS
1,2-Dichloroethene, total	7.3	2.0		ug/L
Trichloroethene	54	5.0	D	ug/L
Vinyl chloride	<1.0	1.0		ug/L

D = Analyte value from a diluted analysis dated 07/05/95

RMT LABORATORIES 744 HEARTLAND TRAIL MADISON, WI 53717-1934 P.O. BOX 8923 MADISON, WI 53708-8923 608/831-4444 608/831-7530 FAX

PROJECT NAME: SKF
PROJECT NUMBER: 70144.05
LAB SAMPLE NUMBER: 7432-005
STATION ID: RW-1
WI DNR LAB ID: 113138520

REPORT DATE: 07/10/95
COLLECTION DATE: 06/20/96
ANALYSIS DATE: 06/29/95
METHOD: 8021

VOLATILE ORGANICS ANALYSIS REPORT

COMPOUND	RESULT	EQL	CODE	UNITS
1,2-Dichloroethene, total	560	100		ug/L
Trichloroethene	9900	500	D	ug/L
Vinyl chloride	<50	50		ug/L

D = Analyte value from a diluted analysis dated 07/03/95

RMT LABORATORIES 744 HEARTLAND TRAIL MADISON, WI 53717-1934 P.O. BOX 8923 MADISON, WI 53708-8923 ~ 608/831-4444 ~ 608/831-7530 FAX

PROJECT NAME: SKF
PROJECT NUMBER: 70144.05
LAB SAMPLE NUMBER: 7478-001
STATION ID: RW-1
WI DNR LAB ID: 113138520

REPORT DATE: 07/14/95
COLLECTION DATE: 06/28/95
ANALYSIS DATE: 07/06/95
METHOD: 8021

VOLATILE ORGANICS ANALYSIS REPORT

COMPOUND	RESULT	EQL	CODE	UNITS
1,2-Dichloroethene, total	240	200		ug/L
Trichloroethene	910	100		ug/L
Vinyl chloride	<100	100		ug/L

RMT LABORATORIES 744 HEARTLAND TRAIL MADISON, WI 53717-1934 P.O. BOX 8923 MADISON, WI 53708-8923 608/831-4444 608/831-7530 FAX

PROJECT NAME: SKF
PROJECT NUMBER: 70144.05
LAB SAMPLE NUMBER: 7452-017
STATION ID: RW-2
WI DNR LAB ID: 113138520

REPORT DATE: 07/12/95
COLLECTION DATE: 06/23/95
ANALYSIS DATE: 06/30/95
METHOD: 8021

VOLATILE ORGANICS ANALYSIS REPORT

COMPOUND	RESULT	EQL	CODE	UNITS
1,2-Dichloroethene, total	23	2.0		ug/L
Trichloroethene	520	20	D	ug/L
Vinyl chloride	<1.0	1.0		ug/L

D = Analyte value from a diluted analysis dated 07/05/95

RMT LABORATORIES 744 HEARTLAND TRAIL MADISON, WI 53717-1934 P.O. BOX 8923 MADISON, WI 53708-8923 608/831-4444 - 608/831-7530 FAX

PROJECT NAME: SKF
PROJECT NUMBER: 70144.05
LAB SAMPLE NUMBER: 7508-001
STATION ID: RW-2
WI DNR LAB ID: 113138520

REPORT DATE: 07/14/95
COLLECTION DATE: 06/30/95
ANALYSIS DATE: 07/12/95
METHOD: 8021

VOLATILE ORGANICS ANALYSIS REPORT

COMPOUND	RESULT	EQL	CODE	UNITS
1,2-Dichloroethene, total	<40	40		ug/L
Trichloroethene	730	20		ug/L
Vinyl chloride	<20	20		ug/L

RMT LABORATORIES 744 HEARTLAND TRAIL · MADISON, WI 53717-1934 P.O. BOX 8923 MADISON, WI 53708-8923 608/831-4444 · 608/831-7530 FAX

PROJECT NAME: SKF
PROJECT NUMBER: 70144.05
LAB SAMPLE NUMBER: 7508-002
STATION ID: TBLK
WI DNR LAB ID: 113138520

REPORT DATE: 07/14/95
COLLECTION DATE:
ANALYSIS DATE: 07/12/95
METHOD: 8021

VOLATILE ORGANICS ANALYSIS REPORT

COMPOUND	RESULT	EQL	CODE	UNITS
1,2-Dichloroethene, total	<2.0	2.0		ug/L
Trichloroethene	<1.0	1.0		ug/L
Vinyl chloride	<1.0	1.0		ug/L

RMT LABORATORIES 744 HEARTLAND TRAIL MADISON, WI 53717-1934 P.O. BOX 8923 MADISON, WI 53708-8923 608/831-4444 608/831-7530 FAX

PROJECT NAME: SKF
PROJECT NUMBER: 70144.05
LAB SAMPLE NUMBER: 7432-001
STATION ID: TBLK-01
WI DNR LAB ID: 113138520

REPORT DATE: 07/10/95
COLLECTION DATE:
ANALYSIS DATE: 06/29/95
METHOD: 8021

VOLATILE ORGANICS ANALYSIS REPORT

COMPOUND	RESULT	EQL	CODE	UNITS
1,2-Dichloroethene, total	<2.0	2.0		ug/L
Trichloroethene	<1.0	1.0		ug/L
Vinyl chloride	<1.0	1.0		ug/L

RMT LABORATORIES 744 HEARTLAND TRAIL MADISON, WI 53717-1934 P.O. BOX 8923 MADISON, WI 53708-8923 608/831-4444 · 608/831-7530 FAX

PROJECT NAME: SKF
PROJECT NUMBER: 70144.05
LAB SAMPLE NUMBER: 7452-001
STATION ID: TBLK-02
WI DNR LAB ID: 113138520

REPORT DATE: 07/12/95
COLLECTION DATE:
ANALYSIS DATE: 06/29/95
METHOD: 8021

VOLATILE ORGANICS ANALYSIS REPORT

COMPOUND	RESULT	EQL	CODE	UNITS
1,2-Dichloroethene, total	<2.0	2.0		ug/L
Trichloroethene	<1.0	1.0		ug/L
Vinyl chloride	<1.0	1.0		ug/L

RMT LABORATORIES 744 HEARTLAND TRAIL MADISON, WI 53717-1934 · P.O. BOX 8923 MADISON, WI 53708-8923 608/831-4444 608/831-7530 FAX

SAMPLE NARRATIVE
VOLATILE GC ORGANIC ANALYSIS

PROJECT NAME: SKF
PROJECT NUMBER: 70144.05
WORKORDER NUMBER: 7452
DATE: 07/12/95

Sample numbers 7452-009, 7452-010, and 7452-011 were initially analyzed undiluted. The amount of 1,2-dichloroethene and trichloroethene detected in the first analyses exceeded the calibration range for these two compounds. The samples were diluted and reanalyzed.

The amount of trichloroethene detected in samples 7452-009 and 7452-010 in the diluted analyses was within the calibration range, however the amount of 1,2-dichloroethene detected was less than the elevated detection limit. The value for trichloroethene in each of these samples was reported from the diluted analysis and the value of the 1,2-dichloroethene was reported from the undiluted analysis with an E qualifier.

The amount of 1,2-dichloroethene detected in sample 7452-011 in the diluted analysis was within the calibration range, however the amount of trichloroethene detected was less than the elevated detection limit. The value for 1,2-dichloroethene for this sample was reported from the diluted analysis and the value for trichloroethene was reported from the undiluted analysis with an E qualifier.

RMT LABORATORIES 744 HEARTLAND TRAIL MADISON, WI 53717-1934 P.O. BOX 8923 MADISON, WI 53708-8923 608/831-4444 608/831-7530 FAX

Inorganic Data Qualifier Sheet

DA Dissolved analyte greater than total analyte; analyses passed QC based on precision criteria.

RMT LABORATORIES 744 HEARTLAND TRAIL MADISON, WI 53717-1934 P.O. BOX 8923 MADISON, WI 53708-8923 608/831-4444 608/831-7530 FAX

PROJECT NAME: SKF
PROJECT NUMBER: 70144.05
LAB SAMPLE NUMBER: 7452-002
STATION ID: MW-1
WI DNR LAB ID: 113138520

REPORT DATE: 07/10/95
COLLECTION DATE: 06/22/95
MATRIX TYPE: GW

INORGANIC ANALYSIS REPORT

COMPOUND	RESULT	EQL	CODE	UNITS
Iron, total	680	100		ug/L
Manganese, total	13	5.0		ug/L
Solids, total suspended	11	10		mg/L

RMT LABORATORIES 744 HEARTLAND TRAIL MADISON, WI 53717-1934 P.O. BOX 8923 · MADISON, WI · 53708-8923 · 608/831-4444 · 608/831-7530 FAX

PROJECT NAME: SKF
PROJECT NUMBER: 70144.05
LAB SAMPLE NUMBER: 7452-002DIS
STATION ID: MW-1
WI DNR LAB ID: 113138520

REPORT DATE: 07/10/95
COLLECTION DATE: 06/22/95
MATRIX TYPE: GW

INORGANIC ANALYSIS REPORT

COMPOUND	RESULT	EQL	CODE	UNITS
Iron, dissolved	< 100	100		ug/L
Manganese, dissolved	< 5.0	5.0		ug/L

RMT LABORATORIES 744 HEARTLAND TRAIL MADISON, WI 53717-1934 P.O. BOX 8923 MADISON, WI 53708-8923 608/831-4444 608/831-7530 FAX

PROJECT NAME: SKF
PROJECT NUMBER: 70144.05
LAB SAMPLE NUMBER: 7452-016
STATION ID: MW-2
WI DNR LAB ID: 113138520

REPORT DATE: 07/10/95
COLLECTION DATE: 06/23/95
MATRIX TYPE: GW

INORGANIC ANALYSIS REPORT

COMPOUND	RESULT	EQL	CODE	UNITS
Iron, total	< 100	100		ug/L
Manganese, total	7.4	5.0		ug/L
Solids, total suspended	< 10	10		mg/L

RMT LABORATORIES 744 HEARTLAND TRAIL MADISON, WI 53717-1934 P.O. BOX 8923 MADISON, WI 53708-8923 608/831-4444 608/831-7530 FAX

PROJECT NAME: SKF
PROJECT NUMBER: 70144.05
LAB SAMPLE NUMBER: 7452-016DIS
STATION ID: MW-2
WI DNR LAB ID: 113138520

REPORT DATE: 07/10/95
COLLECTION DATE: 06/23/95
MATRIX TYPE: GW

INORGANIC ANALYSIS REPORT

COMPOUND	RESULT	EQL	CODE	UNITS
Iron, dissolved	< 100	100		ug/L
Manganese, dissolved	6.2	5.0		ug/L

RMT LABORATORIES 744 HEARTLAND TRAIL MADISON, WI 53717-1934 P.O. BOX 8923 MADISON, WI 53708-8923 608/831-4444 608/831-7530 FAX

PROJECT NAME: SKF
PROJECT NUMBER: 70144.05
LAB SAMPLE NUMBER: 7452-007
STATION ID: MW-4
WI DNR LAB ID: 113138520

REPORT DATE: 07/10/95
COLLECTION DATE: 06/22/95
MATRIX TYPE: GW

INORGANIC ANALYSIS REPORT

COMPOUND	RESULT	EQL	CODE	UNITS
Iron, total	2500	100		ug/L
Manganese, total	81	5.0		ug/L
Solids, total suspended	140	10		mg/L

RMT LABORATORIES 744 HEARTLAND TRAIL · MADISON, WI · 53717-1934 · P.O. BOX 8923 · MADISON, WI · 53708-8923 · 608/831-4444 · 608/831-7530 FAX

PROJECT NAME: SKF
PROJECT NUMBER: 70144.05
LAB SAMPLE NUMBER: 7452-007DIS
STATION ID: MW-4
WI DNR LAB ID: 113138520

REPORT DATE: 07/10/95
COLLECTION DATE: 06/22/95
MATRIX TYPE: GW

INORGANIC ANALYSIS REPORT

COMPOUND	RESULT	EQL	CODE	UNITS
Iron, dissolved	< 100	100		ug/L
Manganese, dissolved	58	5.0		ug/L

RMT LABORATORIES 744 HEARTLAND TRAIL MADISON, WI 53717-1934 · P.O. BOX 8923 · MADISON, WI 53708-8923 608/831-4444 · 608/831-7530 FAX

PROJECT NAME: SKF
PROJECT NUMBER: 70144.05
LAB SAMPLE NUMBER: 7452-010
STATION ID: MW-5
WI DNR LAB ID: 113138520

REPORT DATE: 07/10/95
COLLECTION DATE: 06/22/95
MATRIX TYPE: GW

INORGANIC ANALYSIS REPORT

COMPOUND	RESULT	EQL	CODE	UNITS
Iron, total	10000	100		ug/L
Manganese, total	210	5.0		ug/L
Solids, total suspended	290	10		mg/L

RMT LABORATORIES 744 HEARTLAND TRAIL MADISON, WI 53717-1934 P.O. BOX 8923 MADISON, WI 53708-8923 608/831-4444 608/831-7530 FAX

PROJECT NAME: SKF
PROJECT NUMBER: 70144.05
LAB SAMPLE NUMBER: 7452-010DIS
STATION ID: MW-5
WI DNR LAB ID: 113138520

REPORT DATE: 07/10/95
COLLECTION DATE: 06/22/95
MATRIX TYPE: GW

INORGANIC ANALYSIS REPORT

COMPOUND	RESULT	EQL	CODE	UNITS
Iron, dissolved	< 100	100		ug/L
Manganese, dissolved	23	5.0		ug/L

RMT LABORATORIES 744 HEARTLAND TRAIL MADISON, WI 53717-1934 P.O. BOX 8923 · MADISON, WI · 53708-8923 608/831-4444 608/831-7530 FAX

PROJECT NAME: SKF
PROJECT NUMBER: 70144.05
LAB SAMPLE NUMBER: 7452-003
STATION ID: MW-6
WI DNR LAB ID: 113138520

REPORT DATE: 07/10/95
COLLECTION DATE: 06/22/95
MATRIX TYPE: GW

INORGANIC ANALYSIS REPORT

COMPOUND	RESULT	EQL	CODE	UNITS
Iron, total	10000	100		ug/L
Manganese, total	440	5.0		ug/L
Solids, total suspended	310	10		mg/L

RMT LABORATORIES 744 HEARTLAND TRAIL MADISON, WI 53717-1934 P.O. BOX 8923 MADISON, WI 53708-8923 608/831-4444 608/831-7530 FAX

PROJECT NAME: SKF
PROJECT NUMBER: 70144.05
LAB SAMPLE NUMBER: 7452-003DIS
STATION ID: MW-6
WI DNR LAB ID: 113138520

REPORT DATE: 07/10/95
COLLECTION DATE: 06/22/95
MATRIX TYPE: GW

INORGANIC ANALYSIS REPORT

COMPOUND	RESULT	EQL	CODE	UNITS
Iron, dissolved	< 100	100		ug/L
Manganese, dissolved	13	5.0		ug/L

RMT LABORATORIES 744 HEARTLAND TRAIL MADISON, WI 53717-1934 P.O. BOX 8923 MADISON, WI 53708-8923 608/831-4444 608/831-7530 FAX

PROJECT NAME: SKF
PROJECT NUMBER: 70144.05
LAB SAMPLE NUMBER: 7452-019
STATION ID: MW-7
WI DNR LAB ID: 113138520

REPORT DATE: 07/10/95
COLLECTION DATE: 06/23/95
MATRIX TYPE: GW

INORGANIC ANALYSIS REPORT

COMPOUND	RESULT	EQL	CODE	UNITS
Iron, total	1400	100		ug/L
Manganese, total	60	5.0		ug/L
Solids, total suspended	15	10		mg/L

RMT LABORATORIES 744 HEARTLAND TRAIL MADISON, WI 53717-1934 P.O. BOX 8923 MADISON, WI 53708-8923 608/831-4444 608/831-7530 FAX

PROJECT NAME: SKF
PROJECT NUMBER: 70144.05
LAB SAMPLE NUMBER: 7452-019DIS
STATION ID: MW-7
WI DNR LAB ID: 113138520

REPORT DATE: 07/10/95
COLLECTION DATE: 06/23/95
MATRIX TYPE: GW

INORGANIC ANALYSIS REPORT

COMPOUND	RESULT	EQL	CODE	UNITS
Iron, dissolved	< 100	100		ug/L
Manganese, dissolved	32	5.0		ug/L

RMT LABORATORIES 744 HEARTLAND TRAIL MADISON, WI 53717-1934 P.O. BOX 8923 MADISON, WI 53708-8923 608/831-4444 608/831-7530 FAX

PROJECT NAME: SKF
PROJECT NUMBER: 70144.05
LAB SAMPLE NUMBER: 7452-012
STATION ID: MW-8
WI DNR LAB ID: 113138520

REPORT DATE: 07/10/95
COLLECTION DATE: 06/23/95
MATRIX TYPE: GW

INORGANIC ANALYSIS REPORT

COMPOUND	RESULT	EQL	CODE	UNITS
Iron, total	140	100		ug/L
Manganese, total	< 5.0	5.0		ug/L
Solids, total suspended	11	10		mg/L

RMT LABORATORIES 744 HEARTLAND TRAIL MADISON, WI 53717-1934 P.O. BOX 8923 MADISON, WI 53708-8923 608/831-4444 608/831-7530 FAX

PROJECT NAME: SKF
PROJECT NUMBER: 70144.05
LAB SAMPLE NUMBER: 7452-012DIS
STATION ID: MW-8
WI DNR LAB ID: 113138520

REPORT DATE: 07/10/95
COLLECTION DATE: 06/23/95
MATRIX TYPE: GW

INORGANIC ANALYSIS REPORT

COMPOUND	RESULT	EQL	CODE	UNITS
Iron, dissolved	< 100	100		ug/L
Manganese, dissolved	< 5.0	5.0		ug/L

RMT LABORATORIES 744 HEARTLAND TRAIL MADISON, WI 53717-1934 P.O. BOX 8923 MADISON, WI 53708-8923 608/831-4444 608/831-7530 FAX

PROJECT NAME: SKF
PROJECT NUMBER: 70144.05
LAB SAMPLE NUMBER: 7452-014
STATION ID: MW-9
WI DNR LAB ID: 113138520

REPORT DATE: 07/10/95
COLLECTION DATE: 06/23/95
MATRIX TYPE: GW

INORGANIC ANALYSIS REPORT

COMPOUND	RESULT	EQL	CODE	UNITS
Iron, total	1000	100		ug/L
Manganese, total	98	5.0		ug/L
Solids, total suspended	15	10		mg/L

RMT LABORATORIES 744 HEARTLAND TRAIL MADISON, WI 53717-1934 P.O. BOX 8923 MADISON, WI 53708-8923 608/831-4444 608/831-7530 FAX

PROJECT NAME: SKF
PROJECT NUMBER: 70144.05
LAB SAMPLE NUMBER: 7452-014DIS
STATION ID: MW-9
WI DNR LAB ID: 113138520

REPORT DATE: 07/10/95
COLLECTION DATE: 06/23/95
MATRIX TYPE: GW

INORGANIC ANALYSIS REPORT

COMPOUND	RESULT	EQL	CODE	UNITS
Iron, dissolved	< 100	100		ug/L
Manganese, dissolved	100	5.0	DA	ug/L

RMT LABORATORIES 744 HEARTLAND TRAIL MADISON, WI 53717-1934 P.O. BOX 8923 MADISON, WI 53708-8923 608/831-4444 608/831-7530 FAX

PROJECT NAME: SKF
PROJECT NUMBER: 70144.05
LAB SAMPLE NUMBER: 7452-015
STATION ID: MW-10
WI DNR LAB ID: 113138520

REPORT DATE: 07/10/95
COLLECTION DATE: 06/23/95
MATRIX TYPE: GW

INORGANIC ANALYSIS REPORT

COMPOUND	RESULT	EQL	CODE	UNITS
Iron, total	1400	100		ug/L
Manganese, total	35	5.0		ug/L
Solids, total suspended	12	10		mg/L

RMT LABORATORIES 744 HEARTLAND TRAIL MADISON, WI 53717-1934 P.O. BOX 8923 MADISON, WI 53708-8923 608/831-4444 608/831-7530 FAX

PROJECT NAME: SKF
PROJECT NUMBER: 70144.05
LAB SAMPLE NUMBER: 7452-015DIS
STATION ID: MW-10
WI DNR LAB ID: 113138520

REPORT DATE: 07/10/95
COLLECTION DATE: 06/23/95
MATRIX TYPE: GW

INORGANIC ANALYSIS REPORT

COMPOUND	RESULT	EQL	CODE	UNITS
Iron, dissolved	< 100	100		ug/L
Manganese, dissolved	22	5.0		ug/L

RMT LABORATORIES 744 HEARTLAND TRAIL MADISON, WI 53717-1934 P.O. BOX 8923 MADISON, WI 53708-8923 608/831-4444 608/831-7530 FAX

PROJECT NAME: SKF
PROJECT NUMBER: 70144.05
LAB SAMPLE NUMBER: 7452-004
STATION ID: MW-11
WI DNR LAB ID: 113138520

REPORT DATE: 07/10/95
COLLECTION DATE: 06/22/95
MATRIX TYPE: GW

INORGANIC ANALYSIS REPORT

COMPOUND	RESULT	EQL	CODE	UNITS
Iron, total	6400	100		ug/L
Manganese, total	210	5.0		ug/L
Solids, total suspended	190	10		mg/L

RMT LABORATORIES 744 HEARTLAND TRAIL MADISON, WI 53717-1934 P.O. BOX 8923 MADISON, WI 53708-8923 608/831-4444 608/831-7530 FAX

PROJECT NAME: SKF
PROJECT NUMBER: 70144.05
LAB SAMPLE NUMBER: 7452-004DIS
STATION ID: MW-11
WI DNR LAB ID: 113138520

REPORT DATE: 07/10/95
COLLECTION DATE: 06/22/95
MATRIX TYPE: GW

INORGANIC ANALYSIS REPORT

COMPOUND	RESULT	EQL	CODE	UNITS
Iron, dissolved	< 100	100		ug/L
Manganese, dissolved	38	5.0		ug/L

RMT LABORATORIES 744 HEARTLAND TRAIL MADISON, WI 53717-1934 P.O. BOX 8923 MADISON, WI 53708-8923 608/831-4444 608/831-7530 FAX

PROJECT NAME: SKF
PROJECT NUMBER: 70144.05
LAB SAMPLE NUMBER: 7432-015
STATION ID: MW-12
WI DNR LAB ID: 113138520

REPORT DATE: 07/11/95
COLLECTION DATE: 06/21/95
MATRIX TYPE: GW

INORGANIC ANALYSIS REPORT

COMPOUND	RESULT	EQL	CODE	UNITS
Iron, total	400	100		ug/L
Manganese, total	110	5.0		ug/L
Solids, total suspended	< 10	10		mg/L

RMT LABORATORIES 744 HEARTLAND TRAIL MADISON, WI 53717-1934 P.O. BOX 8923 MADISON, WI 53708-8923 608/831-4444 608/831-7530 FAX

PROJECT NAME: SKF
PROJECT NUMBER: 70144.05
LAB SAMPLE NUMBER: 7432-015DIS
STATION ID: MW-12
WI DNR LAB ID: 113138520

REPORT DATE: 07/11/95
COLLECTION DATE: 06/21/95
MATRIX TYPE: GW

INORGANIC ANALYSIS REPORT

COMPOUND	RESULT	EQL	CODE	UNITS
Iron, dissolved	< 100	100		ug/L
Manganese, dissolved	99	5.0		ug/L

RMT LABORATORIES 744 HEARTLAND TRAIL MADISON, WI 53717-1934 P.O. BOX 8923 MADISON, WI 53708-8923 608/831-4444 608/831-7530 FAX

PROJECT NAME: SKF
PROJECT NUMBER: 70144.05
LAB SAMPLE NUMBER: 7432-010
STATION ID: MW-13
WI DNR LAB ID: 113138520

REPORT DATE: 07/11/95
COLLECTION DATE: 06/21/95
MATRIX TYPE: CMP

INORGANIC ANALYSIS REPORT

COMPOUND	RESULT	EQL	CODE	UNITS
Iron, total	34000	100		ug/L
Manganese, total	14000	5.0		ug/L
Solids, total suspended	35	10		mg/L

RMT LABORATORIES 744 HEARTLAND TRAIL MADISON, WI 53717-1934 P.O. BOX 8923 MADISON, WI 53708-8923 608/831-4444 608/831-7530 FAX

PROJECT NAME: SKF
PROJECT NUMBER: 70144.05
LAB SAMPLE NUMBER: 7432-010DIS
STATION ID: MW-13
WI DNR LAB ID: 113138520

REPORT DATE: 07/11/95
COLLECTION DATE: 06/21/95
MATRIX TYPE: CMP

INORGANIC ANALYSIS REPORT

COMPOUND	RESULT	EQL	CODE	UNITS
Iron, dissolved	35000	100	DA	ug/L
Manganese, dissolved	13000	5.0	DA	ug/L

RMT LABORATORIES 744 HEARTLAND TRAIL MADISON, WI 53717-1934 P.O. BOX 8923 - MADISON, WI 53708-8923 608/831-4444 608/831-7530 FAX

PROJECT NAME: SKF
PROJECT NUMBER: 70144.05
LAB SAMPLE NUMBER: 7432-012
STATION ID: MW-15
WI DNR LAB ID: 113138520

REPORT DATE: 07/11/95
COLLECTION DATE: 06/21/95
MATRIX TYPE: GW

INORGANIC ANALYSIS REPORT

COMPOUND	RESULT	EQL	CODE	UNITS
Iron, total	140	100		ug/L
Manganese, total	2100	5.0		ug/L
Solids, total suspended	< 10	10		mg/L

RMT LABORATORIES 744 HEARTLAND TRAIL MADISON, WI 53717-1934 P.O. BOX 8923 MADISON, WI 53708-8923 608/831-4444 608/831-7530 FAX

PROJECT NAME: SKF
PROJECT NUMBER: 70144.05
LAB SAMPLE NUMBER: 7432-012DIS
STATION ID: MW-15
WI DNR LAB ID: 113138520

REPORT DATE: 07/11/95
COLLECTION DATE: 06/21/95
MATRIX TYPE: GW

INORGANIC ANALYSIS REPORT

COMPOUND	RESULT	EQL	CODE	UNITS
Iron, dissolved	120	100		ug/L
Manganese, dissolved	2300	5.0	DA	ug/L

RMT LABORATORIES 744 HEARTLAND TRAIL MADISON, WI 53717-1934 P.O. BOX 8923 MADISON, WI 53708-8923 608/831-4444 608/831-7530 FAX

PROJECT NAME: SKF
PROJECT NUMBER: 70144.05
LAB SAMPLE NUMBER: 7452-013
STATION ID: DUP-02 (MW-15A)
WI DNR LAB ID: 113138520

REPORT DATE: 07/10/95
COLLECTION DATE:
MATRIX TYPE: GW

INORGANIC ANALYSIS REPORT

COMPOUND	RESULT	EQL	CODE	UNITS
Iron, total	4000	100		ug/L
Manganese, total	4200	5.0		ug/L
Solids, total suspended	38	10		mg/L

RMT LABORATORIES 744 HEARTLAND TRAIL MADISON, WI 53717-1934 P.O. BOX 8923 MADISON, WI 53708-8923 608/831-4444 608/831-7530 FAX

PROJECT NAME: SKF
PROJECT NUMBER: 70144.05
LAB SAMPLE NUMBER: 7452-013DIS
STATION ID: DUP-02 (MW-15A)
WI DNR LAB ID: 113138520

REPORT DATE: 07/10/95
COLLECTION DATE:
MATRIX TYPE: GW

INORGANIC ANALYSIS REPORT

COMPOUND	RESULT	EQL	CODE	UNITS
Iron, dissolved	920	100		ug/L
Manganese, dissolved	4500	5.0	DA	ug/L

RMT LABORATORIES 744 HEARTLAND TRAIL MADISON, WI 53717-1934 P.O. BOX 8923 MADISON, WI 53708-8923 608/831-4444 608/831-7530 FAX

PROJECT NAME: SKF
PROJECT NUMBER: 70144.05
LAB SAMPLE NUMBER: 7432-014
STATION ID: MW-16
WI DNR LAB ID: 113138520

REPORT DATE: 07/11/95
COLLECTION DATE: 06/21/95
MATRIX TYPE: GW

INORGANIC ANALYSIS REPORT

COMPOUND	RESULT	EQL	CODE	UNITS
Iron, total	1600	100		ug/L
Manganese, total	160	5.0		ug/L
Solids, total suspended	15	10		mg/L

RMT LABORATORIES 744 HEARTLAND TRAIL MADISON, WI 53717-1934 P.O. BOX 8923 MADISON, WI 53708-8923 608/831-4444 608/831-7530 FAX

PROJECT NAME: SKF
PROJECT NUMBER: 70144.05
LAB SAMPLE NUMBER: 7432-014DIS
STATION ID: MW-16
WI DNR LAB ID: 113138520

REPORT DATE: 07/11/95
COLLECTION DATE: 06/21/95
MATRIX TYPE: GW

INORGANIC ANALYSIS REPORT

COMPOUND	RESULT	EQL	CODE	UNITS
Iron, dissolved	800	100		ug/L
Manganese, dissolved	160	5.0		ug/L

RMT LABORATORIES 744 HEARTLAND TRAIL MADISON, WI 53717-1934 P.O. BOX 8923 MADISON, WI 53708-8923 608/831-4444 608/831-7530 FAX

PROJECT NAME: SKF
PROJECT NUMBER: 70144.05
LAB SAMPLE NUMBER: 7452-006
STATION ID: MW-16A
WI DNR LAB ID: 113138520

REPORT DATE: 07/10/95
COLLECTION DATE: 06/22/95
MATRIX TYPE: GW

INORGANIC ANALYSIS REPORT

COMPOUND	RESULT	EQL	CODE	UNITS
Iron, total	3100	100		ug/L
Manganese, total	45	5.0		ug/L
Solids, total suspended	22	10		mg/L

RMT LABORATORIES 744 HEARTLAND TRAIL MADISON, WI 53717-1934 P.O. BOX 8923 MADISON, WI 53708-8923 608/831-4444 608/831-7530 FAX

PROJECT NAME: SKF
PROJECT NUMBER: 70144.05
LAB SAMPLE NUMBER: 7452-006DIS
STATION ID: MW-16A
WI DNR LAB ID: 113138520

REPORT DATE: 07/10/95
COLLECTION DATE: 06/22/95
MATRIX TYPE: GW

INORGANIC ANALYSIS REPORT

COMPOUND	RESULT	EQL	CODE	UNITS
Iron, dissolved	780	100		ug/L
Manganese, dissolved	55	5.0	DA	ug/L

RMT LABORATORIES 744 HEARTLAND TRAIL MADISON, WI 53717-1934 P.O. BOX 8923 MADISON, WI 53708-8923 608/831-4444 608/831-7530 FAX

PROJECT NAME: SKF
PROJECT NUMBER: 70144.05
LAB SAMPLE NUMBER: 7432-011
STATION ID: MW-17
WI DNR LAB ID: 113138520

REPORT DATE: 07/11/95
COLLECTION DATE: 06/21/95
MATRIX TYPE: GW

INORGANIC ANALYSIS REPORT

COMPOUND	RESULT	EQL	CODE	UNITS
Iron, total	< 100	100		ug/L
Manganese, total	< 5.0	5.0		ug/L
Solids, total suspended	< 10	10		mg/L

RMT LABORATORIES 744 HEARTLAND TRAIL · MADISON, WI · 53717-1934 · P.O. BOX 8923 · MADISON, WI · 53708-8923 · 608/831-4444 · 608/831-7530 FAX

PROJECT NAME: SKF
PROJECT NUMBER: 70144.05
LAB SAMPLE NUMBER: 7432-011DIS
STATION ID: MW-17
WI DNR LAB ID: 113138520

REPORT DATE: 07/11/95
COLLECTION DATE: 06/21/95
MATRIX TYPE: GW

INORGANIC ANALYSIS REPORT

COMPOUND	RESULT	EQL	CODE	UNITS
Iron, dissolved	< 100	100		ug/L
Manganese, dissolved	< 5.0	5.0		ug/L

RMT LABORATORIES 744 HEARTLAND TRAIL MADISON, WI 53717-1934 P.O. BOX 8923 MADISON, WI 53708-8923 608/831-4444 608/831-7530 FAX

PROJECT NAME: SKF
PROJECT NUMBER: 70144.05
LAB SAMPLE NUMBER: 7432-009
STATION ID: MW-20
WI DNR LAB ID: 113138520

REPORT DATE: 07/11/95
COLLECTION DATE: 06/21/95
MATRIX TYPE: GW

INORGANIC ANALYSIS REPORT

COMPOUND	RESULT	EQL	CODE	UNITS
Iron, total	24000	100		ug/L
Manganese, total	2400	5.0		ug/L
Solids, total suspended	23	10		mg/L

RMT LABORATORIES 744 HEARTLAND TRAIL MADISON, WI 53717-1934 P.O. BOX 8923 MADISON, WI 53708-8923 608/831-4444 608/831-7530 FAX

PROJECT NAME: SKF
PROJECT NUMBER: 70144.05
LAB SAMPLE NUMBER: 7432-009DIS
STATION ID: MW-20
WI DNR LAB ID: 113138520

REPORT DATE: 07/11/95
COLLECTION DATE: 06/21/95
MATRIX TYPE: GW

INORGANIC ANALYSIS REPORT

COMPOUND	RESULT	EQL	CODE	UNITS
Iron, dissolved	25000	100	DA	ug/L
Manganese, dissolved	2600	5.0	DA	ug/L

RMT LABORATORIES 744 HEARTLAND TRAIL MADISON, WI 53717-1934 P.O. BOX 8923 MADISON, WI 53708-8923 608/831-4444 608/831-7530 FAX

PROJECT NAME: SKF
PROJECT NUMBER: 70144.05
LAB SAMPLE NUMBER: 7478-001DIS
STATION ID: RW-1
WI DNR LAB ID: 113138520

REPORT DATE: 07/14/95
COLLECTION DATE: 06/28/95
MATRIX TYPE: GW

INORGANIC ANALYSIS REPORT

COMPOUND	RESULT	EQL	CODE	UNITS
Iron, dissolved	< 100	100		ug/L
Manganese, dissolved	6.0	5.0		ug/L

RMT LABORATORIES 744 HEARTLAND TRAIL MADISON, WI 53717-1934 P.O. BOX 8923 MADISON, WI 53708-8923 608/831-4444 608/831-7530 FAX

PROJECT NAME: SKF
PROJECT NUMBER: 70144.05
LAB SAMPLE NUMBER: 7478-001
STATION ID: RW-1
WI DNR LAB ID: 113138520

REPORT DATE: 07/14/95
COLLECTION DATE: 06/28/95
MATRIX TYPE: GW

INORGANIC ANALYSIS REPORT

COMPOUND	RESULT	EQL	CODE	UNITS
Hardness as CaCO3	290	5.0		mg/L
Iron, total	< 100	100		ug/L
Manganese, total	9.0	5.0		ug/L
Alkalinity as CaCO3	150	20		mg/L
Solids, total suspended	14	10		mg/L
pH, laboratory	7.0		H(2)	su

RMT LABORATORIES 744 HEARTLAND TRAIL MADISON, WI - 53717-1934 - P.O. BOX 8923 - MADISON, WI - 53708-8923 - 608/831-4444 - 608/831-7530 FAX

Inorganic Data Qualifier Sheet

H(n) Analysis performed "n" days past holding time.

RMT INC.
LABORATORIES

SUBCONTRACTED
ANALYTICAL WORK REQUEST

PO # 44348

To: Strand

RMT, Inc.
744 Heartland Trail
P.O. Box 8923
Madison, WI 53708-8923
Phone: 608-831-4444
FAX: 608-831-7530

Attention: Amy R

Please refer to the Purchase Order above on all data, billing, or correspondence regarding these samples. Send the results and invoice to the attention of Kathleen Walker.

Results required by: 7.13.95.

NOTE: If the quote below is not accurate, please notify the contact person above immediately.

ANALYTICAL WORK REQUEST:

7478 RMT Lab #	Sample Description	Date Sampled	Analysis Requested	#/Type of Bottle	Quoted Price
2 001	RW-1	6.28.95	BOD	1-1Lpl	

TOTAL FOR PURCHASE ORDER: $ _____

CHAIN OF CUSTODY:

Relinquished by:	Doug Fey	Date:	6-29-95	Time:	235p
Received by:	[illegible]	Date:	6-29-95	Time:	2530

SAMPLES SHIPPED VIA: Dunhams RMT Project Number: 70144.05

Report on 7-10-95

Received on ice [illegible]

Strand Associates, Inc

910 W. Wingra Drive
Madison, WI 53715
Engineering: (608) 251-4843
Laboratory: (608) 259-2376

Wisconsin DNR Certified Lab No. 113138410

Laboratory Results Report

Wednesday, July 05, 1995

Kathleen Walker
Residual Management Tech.
P. O. Box 8923
Madison, WI 53708-8923

Purchase Order or Job No.: 44348

Samples Received on: 6/29/95 **at** 1530

Sample No.	2200 RW-1	Sample Taken:	6/29/95 , 6/29/95	Ending at:	0 (Grab)

Biochemical Oxygen Demand	<2	mg/L

Comments:

None.

Amy Rose — Authorized for Release

7/5/95 — Date

CC:

Attachments: COC

STRAND ASSOCIATES, INC.

RMT LABORATORIES 744 HEARTLAND TRAIL MADISON, WI 53717-1934 P.O. BOX 8923 MADISON, WI 53708-8923 608/831-4444 608/831-7530 FAX

PROJECT NAME: SKF
PROJECT NUMBER: 70144.05
LAB SAMPLE NUMBER: 7508-001DIS
STATION ID: RW-2
WI DNR LAB ID: 113138520

REPORT DATE: 07/14/95
COLLECTION DATE: 06/30/95
MATRIX TYPE: GW

INORGANIC ANALYSIS REPORT

COMPOUND	RESULT	EQL	CODE	UNITS
Iron, dissolved	< 100	100		ug/L
Manganese, dissolved	< 5.0	5.0		ug/L

RMT LABORATORIES 744 HEARTLAND TRAIL MADISON, WI 53717-1934 P.O. BOX 8923 MADISON, WI 53708-8923 608/831-4444 - 608/831-7530 FAX

PROJECT NAME: SKF
PROJECT NUMBER: 70144.05
LAB SAMPLE NUMBER: 7508-001
STATION ID: RW-2
WI DNR LAB ID: 113138520

REPORT DATE: 07/14/95
COLLECTION DATE: 06/30/95
MATRIX TYPE: GW

INORGANIC ANALYSIS REPORT

COMPOUND	RESULT	EQL	CODE	UNITS
Hardness as CaCO3	170	5.0		mg/L
Iron, total	< 100	100		ug/L
Manganese, total	5.5	5.0		ug/L
Alkalinity as CaCO3	120	20		mg/L
Solids, total suspended	< 10	10	H(3)	mg/L
pH, laboratory	6.6		H(3)	su

RMT LABORATORIES - 744 HEARTLAND TRAIL - MADISON, WI - 53717-1934 - P.O. BOX 8923 - MADISON, WI - 53708-8923 - 608/831-4444 - 608/831-7530 FAX

Inorganic Data Qualifier Sheet

H(n) Analysis performed "n" days past holding time.

HYDROLOGIC, INC.

67080

Chain- of-Custody

Client information:

Name: RMT Laboratories

Address: 100 verdae Boulevard PO Box 16778
Greenville SC 29606

Contact: Ken Lauber Phone: 8032810030
Fx 8032810288

Sample information: # 70144.05

Sample Description	Sample Date/Time	Analysis Required (Be specific)	Sample type Grab/Composite	Preservation (Be specific)	# of Container
RW 2	6-30-95	BOD			

Sampler's Signature: Ken Lauber

Relinquished by: _____ Received by: Melissa Shook
Date/Time: _____ Date/Time: July 1, 1995

Relinquished by: _____ Received by: _____
Date/Time: _____ Date/Time: _____

Relinquished by: _____ Received by: _____
Date/Time: _____ Date/Time: _____

Comments:

REPORT OF ANALYSES

RMT LABORATORIES
100 VERDAE BLVD
PO BOX 16778
GREENVILLE, SC 29606-
Attn: KEN LAUBER

DATE: 07/11/95

(Page 1 of 1)

LAB No.	SAMPLE DATE	SAMPLE TIME	SAMPLER	DELIVERY TO LAB DATE	DELIVERY TO LAB TIME	MATRIX
67080	06/30/95		KEN	07/01/95	1000	WW

CLIENT STATION ID: RW-2 RMT
LAB #: 67080

BOD	mg/l	< 2.0

LABORATORY DIRECTOR

RMT LABORATORIES 744 HEARTLAND TRAIL MADISON, WI 53717-1934 P.O. BOX 8923 MADISON, WI 53708-8923 608/831-4444 608/831-7530 FAX

PROJECT NAME: SKF
PROJECT NUMBER: 70144.05
LAB SAMPLE NUMBER: 7452-017
STATION ID: RW-2
WI DNR LAB ID: 113138520

REPORT DATE: 07/10/95
COLLECTION DATE: 06/23/95
MATRIX TYPE: GW

INORGANIC ANALYSIS REPORT

COMPOUND	RESULT	EQL	CODE	UNITS
Iron, total	460	100		ug/L
Manganese, total	52	5.0		ug/L
Solids, total suspended	< 10	10		mg/L

RMT LABORATORIES 744 HEARTLAND TRAIL MADISON, WI 53717-1934 P.O. BOX 8923 MADISON, WI 53708-8923 608/831-4444 608/831-7530 FAX

PROJECT NAME: SKF
PROJECT NUMBER: 70144.05
LAB SAMPLE NUMBER: 7452-017DIS
STATION ID: RW-2
WI DNR LAB ID: 113138520

REPORT DATE: 07/10/95
COLLECTION DATE: 06/23/95
MATRIX TYPE: GW

INORGANIC ANALYSIS REPORT

COMPOUND	RESULT	EQL	CODE	UNITS
Iron, dissolved	< 100	100		ug/L
Manganese, dissolved	51	5.0		ug/L

Summary of Analysis

The samples were equilibrated in a 25°C water bath, weighed and 10ml removed and reweighed and placed in the 25°C water bath for at least an hour. An aliquot of the headspace was then injected in a Hewlett Packard Model 5890 Series II Gas Chromatograph equipped with a Model 3396A Integrator.
A J&W 50 meter by 0.53 millimeter alumina capillary column was used.

Gas Chromatograph Conditions were:

Oven Temperature	35°C
Run Time	7.5 Minutes
Injector Temperature	100°C
Flame Ionization Detector Temp.	250°C
Helium Flow	7.0 Milliliters/Minute
Auxiliary Gas	20 Milliliters/Minute
Hydrogen	30 Milliliters/Minute
Air	400 Milliliters/Minute
Injection Volume	50 Microliter & 1ml

Henry's Law constants were determined by injecting the same volume of each of the gasses into 40ml vials from which 10ml and 20ml respectively were removed.

A 500 area count was considered the detection limit but where small peaks were seen a second injection 20 times larger was made so that sufficient counts could be obtained to quantitate the peak.

TABLE I Gasses in Water

Lab No.	Field No.	Methane	Ethane	Ethene
12379	7432-009	65.2μg/L	ND<5.7μg/L	ND<6.3μg/L
12380	7432-010	194.9μg/L	ND<5.8μg/L	ND<6.4μg/L
12381	7432-011	ND<3.4μg/L	ND<6.0μg/L	ND<6.6μg/L
12382	7432-012	4.1μg/L	ND<6.0μg/L	ND<6.6μg/L
12383	7432-014	ND<3.1μg/L	ND<5.7μg/L	ND<6.4μg/L
12384	7432-015	ND<3.3μg/L	ND<5.9μg/L	ND<6.5μg/L
12385	7432-016	ND<3.2μg/L	ND<5.8μg/L	ND<6.4μg/L
12386	7432-017	ND<3.3μg/L	ND<5.9μg/L	ND<6.5μg/L

RMT INC. LABORATORIES
Madison, WI 53717
744 Heartland Trail
Phone (608) 831-4444
FAX (608) 831-7530

Fox Valley, WI
Columbus, OH
Milwaukee, WI

Nashville, TN
Greenville, SC

Augusta, GA
Lansing, MI

Chicago, IL
Los Angeles, CA

Cincinnati, OH
Madison, WI

F-268 - 1/2

F-268 (R2/92)
(Use Black Ink Only)

CHAIN OF CUSTODY RECORD

№ 048862

Bottles Prepared by: | Date/Time

Project No.: 70144.05 | Client: SKF - ASHEVILLE

Lab No. 7432	Yr. 95 Date	Time	Sample Station ID	Total Number Of Containers	Container Inventory: 40 mL. Septa Vial	500 mL. Nalgene	500 mL. Nalgene	250 mL. Nalgene					MATRIX	Comments:
					Filtered (Yes/No)	N	N	Y	N					
					Preserved (Code)	E	B	B	A					
001	—	—	TBLK 01	3	3									
002	6/20	0910	MW 23	3	3									
003		1020	MW 26	3	3									
004		1205	MW 24	3	3									
005		1300	RW 1	3	3									
006		1415	MW 21	3	3									
007		1525	MW 18	3	3									
008		1700	MW 27	3	3									
009	6/21	0930	MW 20	7	4	1	1	1						
010		1045	MW 13	7	4	1	1	1						
011		1220	MW 17	7	4	1	1	1						
012		1445	MW 15	7	4	1	1	1						
013	—	—	DUP 01	3	3									

Code: A - None
B - HNO3
C - H_2SO4
D - NaOH
E - HCl
F - _____

SAMPLER Relinquished by (Sig.)	Date/Time	Received by (Sig.)	Date/Time
① R. Bowler	6/21 1900	② FED. EX. Shipper Name & # #849503025 0	
Relinquished by (Sig.) ③	Date/Time	Received by (Sig.) ④ Shipper Name & #	Date/Time
Relinquished by (Sig.) ⑤ Fed Ex	Date/Time 6-22-95 10:30a	Received by (Sig.) ⑥ Ruth M. Gellner Shipper Name & #	Date/Time 6-22-95 10:30a

HAZARDS ASSOCIATED WITH SAMPLES

(For Lab Use Only)
Receipt Temp: Iced
Receipt pH: accept

Custody Seal (Present/Absent) | Seal (Intact/Not Intact) | Seal #'s

WHITE - LABORATORY COPY | YELLOW - REPORT APPENDIX

RMC INC.
LABORATORIES
Madison, WI 53717
744 Heartland Trail
Phone (608) 831-4444
FAX (608) 831-7530
Fox Valley, WI
Columbus, OH
Milwaukee, WI
hville, TN
enville, SC
Augusta, GA
Lansing, MI
Chicago, IL
Los Angeles, CA
cinnati, OH
dison, WI

2/2

F-268 (R2/92)
(Use Black Ink Only)

CHAIN OF CUSTODY RECORD

№ 056397

Bottles Prepared by: | Date/Time

Project No.: 70144.05
Client: SKF-ASHEVILLE

Yr. 95

Lab No.	Date	Time	Sample Station ID	Total Number Of Containers	40 mL SEPTA VIAL	500 mL NALGENE	500 mL NALGENE	250 mL NALGENE				MATRIX	Comments:
			Filtered (Yes/No)		N	N	Y	N					
			Preserved (Code)		E	B	B	A					
7432 014	6/21	1830	MW 16	7	4	1	1	1					
015		1610	MW 12	7	4	1	1	1					
016		1600	MW 1	4	4								
017		1710	MW 6	4	4								

Code: A - None
B - HNO3
C - H_2SO4
D - NaOH
E - HCl
F - _____

SAMPLER Relinquished by (Sig.)	Date/Time	Received by (Sig.)	Date/Time
① R. Bowler	6/21 1900 ~~1800~~	② FED. EX. Shipper Name & # # 8495030250	
Relinquished by (Sig.) ③	Date/Time	Received by (Sig.) ④ Shipper Name & #	Date/Time
Relinquished by (Sig.) ⑤ Fed Ex	Date/Time 6-22-95 10:30a	Received by (Sig.) ⑥ Ruth M. Gellhaus Shipper Name & #	Date/Time 6-22-95 10:30a

HAZARDS ASSOCIATED WITH SAMPLES

(For Lab Use Only)
Receipt Temp: Iced
Receipt pH: acceptable

Custody Seal Present/Absent | Seal | Intact/Not Intact | Seal #'s

WHITE - LABORATORY COPY | YELLOW - REPORT APPENDIX | PINK - SAMPLER/SUBMITTER

Summary of Analysis

The samples were equilibrated in a 25°C water bath, weighed and 10ml removed and reweighed and placed in the 25°C water bath for at least an hour. An aliquot of the headspace was then injected in a Hewlett Packard Model 5890 Series II Gas Chromatograph equipped with a Model 3396A Integrator.
A J&W 50 meter by 0.53 millimeter alumina capillary column was used.

Gas Chromatograph Conditions were:

Oven Temperature	35°C
Run Time	7.5 Minutes
Injector Temperature	100°C
Flame Ionization Detector Temp.	250°C
Helium Flow	7.0 Milliliters/Minute
Auxiliary Gas	20 Milliliters/Minute
Hydrogen	30 Milliliters/Minute
Air	400 Milliliters/Minute
Injection Volume	50 Microliter & 1ml

Henry's Law constants were determined by injecting the same volume of each of the gasses into 40ml vials from which 10ml and 20ml respectively were removed.

A 500 area count was considered the detection limit but where small peaks were seen a second injection 20 times larger was made so that sufficient counts could be obtained to quantitate the peak.

TABLE I Gasses in Water

Lab No.	Field No.	Methane	Ethane	Ethene
12434	7478-001	2.4μg/L	ND<5.7μg/L	ND<6.3μg/L

RWI LABORATORIES
Madison, WI 53717
744 Heartland Trail
Phone (608) 831-4444
FAX (608) 831-7530
Fox Valley, WI
Columbus, OH
Milwaukee, WI
Nashville, TN
nville, SC
Augusta, GA
Lansing, MI
Chicago,IL
Los Angeles, CA
Cincinnati, OH
son, WI

F-268 (R2/92)
(Use Black Ink Only)

CHAIN OF CUSTODY RECORD

№ 056413

Bottles Prepared by: — Date/Time —

Project No. 70144.05

Client: SKF-Asheville

Lab No.	Yr. 95 Date	Time	Sample Station ID	Total Number Of Containers	40 ml Septa (E)	500 ml polyethylene (B)	250 ml polyethylene (A)	1000 ml plastic - BOD (A)	500 ml polyethylene (B)			MATRIX	Comments:
7478					N	N	N	N	N				
001	6-28	1255	RWI	9	4	1	2	1	1				Work Orders coming 6-29-95

Filtered (Yes/No)
Preserved (Code)

Code: A - None
B - HNO3
C - H_2SO4
D - NaOH
E - HCl
F - _____

SAMPLER Relinquished by (Sig.)	Date/Time	Received by (Sig.)	Date/Time
① W.M. Bailey	6/28/95 1015	② Air Borne Shipper Name & # 7331051755	6/28/95 1015
Relinquished by (Sig.) ③	Date/Time	Received by (Sig.) ④ Shipper Name & #	Date/Time
Relinquished by (Sig.) ⑤ Airborne	Date/Time 6-29-95 9:00a	Received by (Sig.) ⑥ Ruth M. Gellman Shipper Name & #	Date/Time 6-29-95 9:00a

HAZARDS ASSOCIATED WITH SAMPLES

(For Lab Use Only)
Receipt Temp: Iced
Receipt pH: acceptable

Custody Seal Present/Absent Seal Intact/Not Intact Seal #'s

WHITE - LABORATORY COPY YELLOW - REPORT APPENDIX PINK - SAMPLER/SUBMITTER

Summary of Analysis

The samples were equilibrated in a 25°C water bath, weighed and 10ml removed and reweighed and placed in the 25°C water bath for at least an hour. An aliquot of the headspace was then injected in a Hewlett Packard Model 5890 Series II Gas Chromatograph equipped with a Model 3396A Integrator.
A J&W 50 meter by 0.53 millimeter alumina capillary column was used.

Gas Chromatograph Conditions were:

Oven Temperature	35°C
Run Time	7.5 Minutes
Injector Temperature	100°C
Flame Ionization Detector Temp.	250°C
Helium Flow	7.0 Milliliters/Minute
Auxiliary Gas	20 Milliliters/Minute
Hydrogen	30 Milliliters/Minute
Air	400 Milliliters/Minute
Injection Volume	50 Microliter & 1ml

Henry's Law constants were determined by injecting the same volume of each of the gasses into 40ml vials from which 10ml and 20ml respectively were removed.

A 500 area count was considered the detection limit but where small peaks were seen a second injection 20 times larger was made so that sufficient counts could be obtained to quantitate the peak.

RMC INC.
LABORATORIES
Madison, WI 53717
744 Heartland Trail
Phone (608) 831-4444
FAX (608) 831-7530
Fox Valley, WI
Columbus, OH
Milwaukee, WI
shville, TN
enville, SC
Augusta, GA
Lansing, MI
Chicago, IL
Los Angeles, CA
cinnati, OH
dison, WI

F-268 (R2/92)
(Use Black Ink Only)

CHAIN OF CUSTODY RECORD

№ 056414

Bottles Prepared by: | Date/Time

Project No.: 70144.05

Client: SKF-Ashville

Lab No. 7508	Yr. 95 Date	Time	Sample Station ID	Total Number Of Containers	40 ml Septa Vial	250 ml Nalgene	500 ml Nalgene	500 ml Nalgene				MATRIX	Comments:
Filtered (Yes/No)					N	N	N	Y					
Preserved (Code)					E	A	B	B					
001	6-30	1605	RW-2	7	4	1	1	1				GW	
002	—	—	TBLK	4	4							GW	

Code: A - None
B - HNO3
C - H_2SO4
D - NaOH
E - HCl
F - ____

SAMPLER Relinquished by (Sig.)	Date/Time	Received by (Sig.) / Shipper Name & #	Date/Time
① Bill Medlin	6-30-95 18:00	② Ken Lauber	6-30-95 18:00
Relinquished by (Sig.) ③ Ken Lauber	6-30-95 18:30	Received by (Sig.) ④ Shipper Name & # Fed EX 3973746291	6-30-95 18:30
Relinquished by (Sig.) ⑤ Fed Ex	7-3-95 10:159	Received by (Sig.) ⑥ Ruth M. Gallaway Shipper Name & #	7-3-95 10:159

HAZARDS ASSOCIATED WITH SAMPLES
Work order to be FAXed 7-5-95

(For Lab Use Only)
Receipt Temp: 11°C (Ice Melted)
Receipt pH: acceptable

Custody Seal Present/Absent | Seal Intact/Not Intact | Seal #'s

TABLE I Gasses in Water

Lab No.	Field No.	Methane	Ethane	Ethene
12435	7508-001	ND<3.0μg/L	ND<5.6μg/L	ND<6.1μg/L

Summary of Analysis

The samples were equilibrated in a 25°C water bath, weighed and 10ml removed and reweighed and placed in the 25°C water bath for at least an hour. An aliquot of the headspace was then injected in a Hewlett Packard Model 5890 Series II Gas Chromatograph equipped with a Model 3396A Integrator.
A J&W 50 meter by 0.53 millimeter alumina capillary column was used.

Gas Chromatograph Conditions were:

Oven Temperature	35°C
Run Time	7.5 Minutes
Injector Temperature	100°C
Flame Ionization Detector Temp.	250°C
Helium Flow	7.0 Milliliters/Minute
Auxiliary Gas	20 Milliliters/Minute
Hydrogen	30 Milliliters/Minute
Air	400 Milliliters/Minute
Injection Volume	50 Microliter & 1ml

Henry's Law constants were determined by injecting the same volume of each of the gasses into 40ml vials from which 10ml and 20ml respectively were removed.

A 500 area count was considered the detection limit but where small peaks were seen a second injection 20 times larger was made so that sufficient counts could be obtained to quantitate the peak.

RMC INC.
LABORATORIES
Madison, WI 53717
744 Heartland Trail
Phone (608) 831-4444
FAX (608) 831-7530
Fox Valley, WI
Columbus, OH
Milwaukee, WI
ville, TN
enville, SC
Augusta, GA
Lansing, MI
Chicago, IL
Los Angeles, CA
innati, OH
ison, WI

F-268 (R2/92)
(Use Black Ink Only)

CHAIN OF CUSTODY RECORD

№ 056398

Bottles Prepared by: | Date/Time

Project No.: 70144.05

Client: SKF-ASHEVILLE

Container Inventory: 40ML. SEPTA VIAL; 500ML. NALGENE; 500ML. NALGENE; 250ML. NALGENE

Filtered (Yes/No): N N Y N

Preserved (Code): E B B A

Code: A - None; B - HNO3; C - H_2SO_4; D - NaOH; E - HCl; F - _____

Lab No. (Yr. 95)	Date	Time	Sample Station ID	Total Number Of Containers	40ML. SEPTA VIAL	500ML. NALGENE	500ML. NALGENE	250ML. NALGENE				MATRIX	Comments:
001	—	—	TBLK 02	3	3							GW	
002	6/22	0805	MW 1	3		1	1	1					
003		0855	MW 6	3		1	1	1					
004		1055	MW 11	7	~~3~~4	1	1	1					
005		1300	MW 15A	7	~~3~~4	1	1	1					
006		1430	MW 16A	7	~~3~~4	1	1	1					
007		1605	MW 4	7	~~3~~4	1	1	1					
008		1620	MW 8	4	4								
009		1730	MW 9	4	4								
010		1800	MW 5	7	4	1	1	1					
011		1840	MW 10	4	4								
012	6/23	0715	MW 8	3		1	1	1					
013	—	—	DUP-02	7	4	1	1	1					

SAMPLER Relinquished by (Sig.)	Date/Time	Received by (Sig.)	Date/Time
① R. Bowler	6/23 1630	② FED. EX. Shipper Name & # # 8495030246	
③ Fed Ex	6-24-95 10:00a	④ Walk Shipper Name & # Ruth M. Gellman	6-24-95 10:00a
⑤ Walk-In	6-24-95 10:00a	⑥ Ruth M. Gellman Shipper Name & #	6-26-95 10:30a

HAZARDS ASSOCIATED WITH SAMPLES

(For Lab Use Only)
Receipt Temp: Iced
Receipt pH: acceptable

Custody Seal: Present/Absent | Seal: Intact/Not Intact | Seal #'s

RMI LABORATORIES
Madison, WI 53717
744 Heartland Trail
Phone (608) 831-4444
FAX (608) 831-7530
Fox Valley, WI
Columbus, OH
Milwaukee, WI
...ville, TN
...nville, SC
Augusta, GA
Lansing, MI
Chicago, IL
Los Angeles, CA
...nnati, OH
...ison, WI

2/2

F-268 (R2/92)
(Use Black Ink Only)

CHAIN OF CUSTODY RECORD

№ 056399

Bottles Prepared by: | Date/Time

Project No.: 70144.05
Client: SKF-ASHEVILLE

Filtered (Yes/No): N N Y N
Preserved (Code): E B B A

Code: A - None, B - HNO_3, C - H_2SO_4, D - NaOH, E - HCl, F - ____

Lab No.	Yr. 95 Date	Time	Sample Station ID	Total Number Of Containers	40ml. Septa Vial	500 ml Nalgene	500ml Nalgene	250 ml. Nalgene				Matrix	Comments:
7452 014	6/23	0740	MW 9	3		1	1	1				GW	
015		0805	MW 10	3		1	1	1					
016		1005	MW 2	7	4	1	1	1					
017		1045	RW 2	7	4	1	1	1					
018		1100	MW 14	3	3								
019		1120	MW 7	7	4	1	1	1					
020		1215	MW 22	3	3								
021		1330	MW 28	3	3								
022		1335	MW 19	3	3								
023		1450	MW 28A	3	3								

SAMPLER Relinquished by (Sig.)	Date/Time	Received by (Sig.)	Date/Time
① R. Bowler	6/23 1630	② FED. EX. Shipper Name & # #8495030246	
Relinquished by (Sig.) ③ Fed Ex	6-24-95 10:00a	Received by (Sig.) ④ Ruth M. Gelhaus Shipper Name & #	6-24-95 10:00a
Relinquished by (Sig.) ⑤ Walk In	6-24-95 10:00	Received by (Sig.) ⑥ Ruth M. Gelhaus Shipper Name & #	6-26-95 10:30a

HAZARDS ASSOCIATED WITH SAMPLES

(For Lab Use Only)
Receipt Temp: Iced
Receipt pH: acceptable

Custody Seal: Present/Absent | Seal | Intact/Not Intact | Seal #'s

TABLE I Gasses in Water

Lab No.	Field No.	Methane	Ethane	Ethene
12393	7452-004	ND<3.3μg/L	ND<5.9μg/L	ND<6.6μg/L
12394	7452-005	ND<3.3μg/L	ND<5.9μg/L	ND<6.5μg/L
12395	7452-006	ND<3.1μg/L	ND<5.7μg/L	ND<6.3μg/L
12396	7452-007	18.9μg/L	ND<5.8μg/L	ND<6.4μg/L
12397	7452-010	ND<3.4μg/L	ND<6.1μg/L	ND<6.8μg/L
12398	7452-008	ND<3.1μg/L	ND<5.6μg/L	ND<6.3μg/L
12399	7452-009	ND<3.2μg/L	ND<5.8μg/L	ND<6.5μg/L
12400	7452-011	ND<3.2μg/L	ND<5.8μg/L	ND<6.4μg/L
12401	7452-016	ND<3.3μg/L	ND<6.0μg/L	ND<6.6μg/L
12402	7452-019	ND<3.2μg/L	ND<5.8μg/L	ND<6.4μg/L
12403	7452-017	9.9μg/L	ND<5.5μg/L	ND<6.2μg/L
12404	7452-013	≤2.4μg/L	ND<6.0μg/L	ND<6.7μg/L

GROUND WATER SAMPLES COLLECTED

JANUARY/FEBRUARY 1996

RMT LABORATORIES 744 HEARTLAND TRAIL MADISON, WI 53717-1934 P.O. BOX 8923 MADISON, WI 53708-8923 608/831-4444 608/831-7530 FAX

PROJECT NAME: SKF-ASHEVILLE
PROJECT NUMBER: 70144.05
LAB SAMPLE NUMBER: 9076-011
STATION ID: MW-1
WI DNR LAB ID: 113138520

REPORT DATE: 02/20/96
COLLECTION DATE: 01/30/96
ANALYSIS DATE: 02/08/96
METHOD: 8010

VOLATILE ORGANICS ANALYSIS REPORT

COMPOUND	RESULT	EQL	CODE	UNITS
Vinyl chloride	<1.0	1.0		ug/L
1,2-Dichloroethene, total	<2.0	2.0		ug/L
Trichloroethene	<1.0	1.0		ug/L

RMT LABORATORIES 744 HEARTLAND TRAIL MADISON, WI 53717-1934 P.O. BOX 8923 MADISON, WI 53708-8923 608/831-4444 608/831-7530 FAX

PROJECT NAME: SKF-ASHEVILLE
PROJECT NUMBER: 70144.05
LAB SAMPLE NUMBER: 9076-014
STATION ID: MW-2
WI DNR LAB ID: 113138520

REPORT DATE: 02/20/96
COLLECTION DATE: 01/31/96
ANALYSIS DATE: 02/08/96
METHOD: 8010

VOLATILE ORGANICS ANALYSIS REPORT

COMPOUND	RESULT	EQL	CODE	UNITS
Vinyl chloride	<5.0	5.0		ug/L
1,2-Dichloroethene, total	<10	10		ug/L
Trichloroethene	88	5.0		ug/L

RMT LABORATORIES 744 HEARTLAND TRAIL MADISON, WI 53717-1934 P.O. BOX 8923 MADISON, WI 53708-8923 608/831-4444 608/831-7530 FAX

PROJECT NAME: SKF-ASHEVILLE
PROJECT NUMBER: 70144.05
LAB SAMPLE NUMBER: 9076-020
STATION ID: MW-4
WI DNR LAB ID: 113138520

REPORT DATE: 02/20/96
COLLECTION DATE: 01/31/96
ANALYSIS DATE: 02/08/96
METHOD: 8010

VOLATILE ORGANICS ANALYSIS REPORT

COMPOUND	RESULT	EQL	CODE	UNITS
Vinyl chloride	<100	100		ug/L
1,2-Dichloroethene, total	360	200		ug/L
Trichloroethene	740	100		ug/L

RMT LABORATORIES 744 HEARTLAND TRAIL MADISON, WI 53717-1934 P.O. BOX 8923 MADISON, WI 53708-8923 608/831-4444 608/831-7530 FAX

PROJECT NAME: SKF-ASHEVILLE
PROJECT NUMBER: 70144.05
LAB SAMPLE NUMBER: 9092-010
STATION ID: MW 5
WI DNR LAB ID: 113138520

REPORT DATE: 02/19/96
COLLECTION DATE: 02/02/96
ANALYSIS DATE: 02/15/96
METHOD: 8010

VOLATILE ORGANICS ANALYSIS REPORT

COMPOUND	RESULT	EQL	CODE	UNITS
Vinyl chloride	<200	200		ug/L
1,2-Dichloroethene, total	<400	400		ug/L
Trichloroethene	5200	200		ug/L

RMT LABORATORIES 744 HEARTLAND TRAIL MADISON, WI 53717-1934 P.O. BOX 8923 MADISON, WI 53708-8923 608/831-4444 608/831-7530 FAX

PROJECT NAME: SKF-ASHEVILLE
PROJECT NUMBER: 70144.05
LAB SAMPLE NUMBER: 9076-013
STATION ID: MW-6
WI DNR LAB ID: 113138520

REPORT DATE: 02/20/96
COLLECTION DATE: 01/31/96
ANALYSIS DATE: 02/08/96
METHOD: 8010

VOLATILE ORGANICS ANALYSIS REPORT

COMPOUND	RESULT	EQL	CODE	UNITS
Vinyl chloride	<1.0	1.0		ug/L
1,2-Dichloroethene, total	<2.0	2.0		ug/L
Trichloroethene	<1.0	1.0		ug/L

RMT LABORATORIES 744 HEARTLAND TRAIL MADISON, WI 53717-1934 P.O. BOX 8923 MADISON, WI 53708-8923 608/831-4444 608/831-7530 FAX

PROJECT NAME: SKF-ASHEVILLE
PROJECT NUMBER: 70144.05
LAB SAMPLE NUMBER: 9076-015
STATION ID: MW-7
WI DNR LAB ID: 113138520

REPORT DATE: 02/20/96
COLLECTION DATE: 01/31/96
ANALYSIS DATE: 02/08/96
METHOD: 8010

VOLATILE ORGANICS ANALYSIS REPORT

COMPOUND	RESULT	EQL	CODE	UNITS
Vinyl chloride	<1.0	1.0		ug/L
1,2-Dichloroethene, total	<2.0	2.0		ug/L
Trichloroethene	<1.0	1.0		ug/L

RMT LABORATORIES 744 HEARTLAND TRAIL MADISON, WI 53717-1934 P.O. BOX 8923 MADISON, WI 53708-8923 608/831-4444 608/831-7530 FAX

PROJECT NAME: SKF-ASHEVILLE
PROJECT NUMBER: 70144.05
LAB SAMPLE NUMBER: 9076-016
STATION ID: MW-8
WI DNR LAB ID: 113138520

REPORT DATE: 02/20/96
COLLECTION DATE: 01/31/96
ANALYSIS DATE: 02/08/96
METHOD: 8010

VOLATILE ORGANICS ANALYSIS REPORT

COMPOUND	RESULT	EQL	CODE	UNITS
Vinyl chloride	<1.0	1.0		ug/L
1,2-Dichloroethene, total	<2.0	2.0		ug/L
Trichloroethene	<1.0	1.0		ug/L

RMT LABORATORIES 744 HEARTLAND TRAIL MADISON, WI 53717-1934 P.O. BOX 8923 MADISON, WI 53708-8923 608/831-4444 608/831-7530 FAX

PROJECT NAME: SKF-ASHEVILLE
PROJECT NUMBER: 70144.05
LAB SAMPLE NUMBER: 9076-017
STATION ID: MW-9
WI DNR LAB ID: 113138520

REPORT DATE: 02/20/96
COLLECTION DATE: 01/31/96
ANALYSIS DATE: 02/08/96
METHOD: 8010

VOLATILE ORGANICS ANALYSIS REPORT

COMPOUND	RESULT	EQL	CODE	UNITS
Vinyl chloride	<100	100		ug/L
1,2-Dichloroethene, total	<200	200		ug/L
Trichloroethene	2700	100		ug/L

RMT LABORATORIES 744 HEARTLAND TRAIL MADISON, WI 53717-1934 P.O. BOX 8923 MADISON, WI 53708-8923 608/831-4444 608/831-7530 FAX

PROJECT NAME: SKF-ASHEVILLE
PROJECT NUMBER: 70144.05
LAB SAMPLE NUMBER: 9076-018
STATION ID: MW-10
WI DNR LAB ID: 113138520

REPORT DATE: 02/20/96
COLLECTION DATE: 01/31/96
ANALYSIS DATE: 02/08/96
METHOD: 8010

VOLATILE ORGANICS ANALYSIS REPORT

COMPOUND	RESULT	EQL	CODE	UNITS
Vinyl chloride	<100	100		ug/L
1,2-Dichloroethene, total	380	200		ug/L
Trichloroethene	<100	100		ug/L

RMT LABORATORIES 744 HEARTLAND TRAIL MADISON, WI 53717-1934 P.O. BOX 8923 MADISON, WI 53708-8923 608/831-4444 608/831-7530 FAX

PROJECT NAME: SKF-ASHEVILLE
PROJECT NUMBER: 70144.05
LAB SAMPLE NUMBER: 9092-011
STATION ID: MW 11
WI DNR LAB ID: 113138520

REPORT DATE: 02/19/96
COLLECTION DATE: 02/02/96
ANALYSIS DATE: 02/15/96
METHOD: 8010

VOLATILE ORGANICS ANALYSIS REPORT

COMPOUND	RESULT	EQL	CODE	UNITS
Vinyl chloride	<1.0	1.0		ug/L
1,2-Dichloroethene, total	<2.0	2.0		ug/L
Trichloroethene	<1.0	1.0		ug/L

RMT LABORATORIES 744 HEARTLAND TRAIL MADISON, WI 53717-1934 P.O. BOX 8923 MADISON, WI 53708-8923 608/831-4444 608/831-7530 FAX

PROJECT NAME: SKF-ASHEVILLE
PROJECT NUMBER: 70144.05
LAB SAMPLE NUMBER: 9076-004
STATION ID: MW-12
WI DNR LAB ID: 113138520

REPORT DATE: 02/20/96
COLLECTION DATE: 01/30/96
ANALYSIS DATE: 02/07/96
METHOD: 8010

VOLATILE ORGANICS ANALYSIS REPORT

COMPOUND	RESULT	EQL	CODE	UNITS
Vinyl chloride	<1.0	1.0		ug/L
1,2-Dichloroethene, total	<2.0	2.0		ug/L
Trichloroethene	<1.0	1.0		ug/L

RMT LABORATORIES 744 HEARTLAND TRAIL MADISON, WI 53717-1934 P.O. BOX 8923 MADISON, WI 53708-8923 608/831-4444 608/831-7530 FAX

PROJECT NAME: SKF-ASHEVILLE
PROJECT NUMBER: 70144.05
LAB SAMPLE NUMBER: 9076-003
STATION ID: MW-13
WI DNR LAB ID: 113138520

REPORT DATE: 02/20/96
COLLECTION DATE: 01/30/96
ANALYSIS DATE: 02/07/96
METHOD: 8010

VOLATILE ORGANICS ANALYSIS REPORT

COMPOUND	RESULT	EQL	CODE	UNITS
Vinyl chloride	4.8	1.0		ug/L
1,2-Dichloroethene, total	<2.0	2.0		ug/L
Trichloroethene	<1.0	1.0		ug/L

RMT LABORATORIES 744 HEARTLAND TRAIL · MADISON, WI 53717-1934 P.O. BOX 8923 MADISON, WI 53708-8923 608/831-4444 608/831-7530 FAX

PROJECT NAME: SKF-ASHEVILLE
PROJECT NUMBER: 70144.05
LAB SAMPLE NUMBER: 9092-006
STATION ID: MW 14
WI DNR LAB ID: 113138520

REPORT DATE: 02/19/96
COLLECTION DATE: 02/01/96
ANALYSIS DATE: 02/15/96
METHOD: 02/20/96

VOLATILE ORGANICS ANALYSIS REPORT

COMPOUND	RESULT	EQL	CODE	UNITS
Vinyl chloride	<5.0	5.0		ug/L
1,2-Dichloroethene, total	<10	10		ug/L
Trichloroethene	80	5.0		ug/L

RMT LABORATORIES 744 HEARTLAND TRAIL MADISON, WI 53717-1934 P.O. BOX 8923 MADISON, WI 53708-8923 608/831-4444 608/831-7530 FAX

PROJECT NAME: SKF-ASHEVILLE
PROJECT NUMBER: 70144.05
LAB SAMPLE NUMBER: 9076-006
STATION ID: MW-15
WI DNR LAB ID: 113138520

REPORT DATE: 02/20/96
COLLECTION DATE: 01/30/96
ANALYSIS DATE: 02/07/96
METHOD: 8010

VOLATILE ORGANICS ANALYSIS REPORT

COMPOUND	RESULT	EQL	CODE	UNITS
Vinyl chloride	<1.0	1.0		ug/L
1,2-Dichloroethene, total	<2.0	2.0		ug/L
Trichloroethene	<1.0	1.0		ug/L

RMT LABORATORIES 744 HEARTLAND TRAIL MADISON, WI 53717-1934 P.O. BOX 8923 MADISON, WI 53708-8923 608/831-4444 608/831-7530 FAX

PROJECT NAME: SKF-ASHEVILLE
PROJECT NUMBER: 70144.05
LAB SAMPLE NUMBER: 9076-012
STATION ID: MW-15A
WI DNR LAB ID: 113138520

REPORT DATE: 02/20/96
COLLECTION DATE: 01/30/96
ANALYSIS DATE: 02/08/96
METHOD: 8010

VOLATILE ORGANICS ANALYSIS REPORT

COMPOUND	RESULT	EQL	CODE	UNITS
Vinyl chloride	<1.0	1.0		ug/L
1,2-Dichloroethene, total	<2.0	2.0		ug/L
Trichloroethene	<1.0	1.0		ug/L

RMT LABORATORIES 744 HEARTLAND TRAIL MADISON, WI 53717-1934 P.O. BOX 8923 MADISON, WI 53708-8923 608/831-4444 608/831-7530 FAX

PROJECT NAME: SKF-ASHEVILLE
PROJECT NUMBER: 70144.05
LAB SAMPLE NUMBER: 9076-007
STATION ID: MW-16
WI DNR LAB ID: 113138520

REPORT DATE: 02/20/96
COLLECTION DATE: 01/30/96
ANALYSIS DATE: 02/07/96
METHOD: 8010

VOLATILE ORGANICS ANALYSIS REPORT

COMPOUND	RESULT	EQL	CODE	UNITS
Vinyl chloride	<1.0	1.0		ug/L
1,2-Dichloroethene, total	<2.0	2.0		ug/L
Trichloroethene	<1.0	1.0		ug/L

RMT LABORATORIES 744 HEARTLAND TRAIL MADISON, WI 53717-1934 P.O. BOX 8923 MADISON, WI 53708-8923 608/831-4444 608/831-7530 FAX

PROJECT NAME: SKF-ASHEVILLE
PROJECT NUMBER: 70144.05
LAB SAMPLE NUMBER: 9076-008
STATION ID: MW-16A
WI DNR LAB ID: 113138520

REPORT DATE: 02/20/96
COLLECTION DATE: 01/30/96
ANALYSIS DATE: 02/07/96
METHOD: 8010

VOLATILE ORGANICS ANALYSIS REPORT

COMPOUND	RESULT	EQL	CODE	UNITS
Vinyl chloride	<1.0	1.0		ug/L
1,2-Dichloroethene, total	<2.0	2.0		ug/L
Trichloroethene	<1.0	1.0		ug/L

RMT LABORATORIES 744 HEARTLAND TRAIL MADISON, WI 53717-1934 P.O. BOX 8923 MADISON, WI 53708-8923 608/831-4444 608/831-7530 FAX

PROJECT NAME: SKF-ASHEVILLE
PROJECT NUMBER: 70144.05
LAB SAMPLE NUMBER: 9076-022
STATION ID: DUP 01 (MW-16A)
WI DNR LAB ID: 113138520

REPORT DATE: 02/20/96
COLLECTION DATE: 01/31/96
ANALYSIS DATE: 02/08/96
METHOD: 8010

VOLATILE ORGANICS ANALYSIS REPORT

COMPOUND	RESULT	EQL	CODE	UNITS
Vinyl chloride	<1.0	1.0		ug/L
1,2-Dichloroethene, total	<2.0	2.0		ug/L
Trichloroethene	<1.0	1.0		ug/L

RMT LABORATORIES 744 HEARTLAND TRAIL MADISON, WI 53717-1934 P.O. BOX 8923 MADISON, WI 53708-8923 608/831-4444 608/831-7530 FAX

PROJECT NAME: SKF-ASHEVILLE
PROJECT NUMBER: 70144.05
LAB SAMPLE NUMBER: 9076-005
STATION ID: MW-17
WI DNR LAB ID: 113138520

REPORT DATE: 02/20/96
COLLECTION DATE: 01/30/96
ANALYSIS DATE: 02/07/96
METHOD: 8010

VOLATILE ORGANICS ANALYSIS REPORT

COMPOUND	RESULT	EQL	CODE	UNITS
Vinyl chloride	<1.0	1.0		ug/L
1,2-Dichloroethene, total	<2.0	2.0		ug/L
Trichloroethene	<1.0	1.0		ug/L

RMT LABORATORIES 744 HEARTLAND TRAIL MADISON, WI 53717-1934 P.O. BOX 8923 MADISON, WI 53708-8923 608/831-4444 608/831-7530 FAX

PROJECT NAME: SKF-ASHEVILLE
PROJECT NUMBER: 70144.05
LAB SAMPLE NUMBER: 9092-005
STATION ID: MW 18
WI DNR LAB ID: 113138520

REPORT DATE: 02/19/96
COLLECTION DATE: 02/01/96
ANALYSIS DATE: 02/09/96
METHOD: 8010

VOLATILE ORGANICS ANALYSIS REPORT

COMPOUND	RESULT	EQL	CODE	UNITS
Vinyl chloride	<1.0	1.0		ug/L
1,2-Dichloroethene, total	<2.0	2.0		ug/L
Trichloroethene	1.0	1.0		ug/L

RMT LABORATORIES 744 HEARTLAND TRAIL MADISON, WI 53717-1934 P.O. BOX 8923 · MADISON, WI 53708-8923 608/831-4444 608/831-7530 FAX

PROJECT NAME: SKF-ASHEVILLE
PROJECT NUMBER: 70144.05
LAB SAMPLE NUMBER: 9092-012
STATION ID: MW 19
WI DNR LAB ID: 113138520

REPORT DATE: 02/19/96
COLLECTION DATE: 02/02/96
ANALYSIS DATE: 02/16/96
METHOD: 8010

VOLATILE ORGANICS ANALYSIS REPORT

COMPOUND	RESULT	EQL	CODE	UNITS
Vinyl chloride	<1.0	1.0		ug/L
1,2-Dichloroethene, total	<2.0	2.0		ug/L
Trichloroethene	28	1.0		ug/L

RMT LABORATORIES 744 HEARTLAND TRAIL MADISON, WI 53717-1934 P.O. BOX 8923 MADISON, WI 53708-8923 608/831-4444 608/831-7530 FAX

PROJECT NAME: SKF-ASHEVILLE
PROJECT NUMBER: 70144.05
LAB SAMPLE NUMBER: 9092-014
STATION ID: DUP 02 (MW-19)
WI DNR LAB ID: 113138520

REPORT DATE: 02/19/96
COLLECTION DATE:
ANALYSIS DATE: 02/15/96
METHOD: 8010

VOLATILE ORGANICS ANALYSIS REPORT

COMPOUND	RESULT	EQL	CODE	UNITS
Vinyl chloride	<1.0	1.0		ug/L
1,2-Dichloroethene, total	<2.0	2.0		ug/L
Trichloroethene	28	1.0		ug/L

RMT LABORATORIES 744 HEARTLAND TRAIL · MADISON, WI 53717-1934 P.O. BOX 8923 MADISON, WI 53708-8923 608/831-4444 608/831-7530 FAX

PROJECT NAME: SKF-ASHEVILLE
PROJECT NUMBER: 70144.05
LAB SAMPLE NUMBER: 9076-002
STATION ID: MW-20
WI DNR LAB ID: 113138520

REPORT DATE: 02/20/96
COLLECTION DATE: 01/30/96
ANALYSIS DATE: 02/07/96
METHOD: 8010

VOLATILE ORGANICS ANALYSIS REPORT

COMPOUND	RESULT	EQL	CODE	UNITS
Vinyl chloride	<1.0	1.0		ug/L
1,2-Dichloroethene, total	<2.0	2.0		ug/L
Trichloroethene	<1.0	1.0		ug/L

RMT LABORATORIES 744 HEARTLAND TRAIL MADISON, WI 53717-1934 P.O. BOX 8923 MADISON, WI 53708-8923 608/831-4444 608/831-7530 FAX

PROJECT NAME: SKF-ASHEVILLE
PROJECT NUMBER: 70144.05
LAB SAMPLE NUMBER: 9092-004
STATION ID: MW 21
WI DNR LAB ID: 113138520

REPORT DATE: 02/19/96
COLLECTION DATE: 02/01/96
ANALYSIS DATE: 02/15/96
METHOD: 8010

VOLATILE ORGANICS ANALYSIS REPORT

COMPOUND	RESULT	EQL	CODE	UNITS
Vinyl chloride	<10	10		ug/L
1,2-Dichloroethene, total	200	20		ug/L
Trichloroethene	320	10		ug/L

RMT LABORATORIES 744 HEARTLAND TRAIL MADISON, WI 53717-1934 P.O. BOX 8923 MADISON, WI 53708-8923 608/831-4444 608/831-7530 FAX

PROJECT NAME: SKF-ASHEVILLE
PROJECT NUMBER: 70144.05
LAB SAMPLE NUMBER: 9092-013
STATION ID: MW 22
WI DNR LAB ID: 113138520

REPORT DATE: 02/19/96
COLLECTION DATE: 02/02/96
ANALYSIS DATE: 02/15/96
METHOD: 8010

VOLATILE ORGANICS ANALYSIS REPORT

COMPOUND	RESULT	EQL	CODE	UNITS
Vinyl chloride	<1.0	1.0		ug/L
1,2-Dichloroethene, total	<2.0	2.0		ug/L
Trichloroethene	<1.0	1.0		ug/L

RMT LABORATORIES 744 HEARTLAND TRAIL MADISON, WI 53717-1934 P.O. BOX 8923 MADISON, WI 53708-8923 608/831-4444 608/831-7530 FAX

PROJECT NAME: SKF-ASHEVILLE
PROJECT NUMBER: 70144.05
LAB SAMPLE NUMBER: 9076-009
STATION ID: MW-23
WI DNR LAB ID: 113138520

REPORT DATE: 02/20/96
COLLECTION DATE: 01/30/96
ANALYSIS DATE: 02/07/96
METHOD: 8010

VOLATILE ORGANICS ANALYSIS REPORT

COMPOUND	RESULT	EQL	CODE	UNITS
Vinyl chloride	<500	500		ug/L
1,2-Dichloroethene, total	<1000	1000		ug/L
Trichloroethene	14000	500		ug/L

RMT LABORATORIES 744 HEARTLAND TRAIL MADISON, WI 53717-1934 P.O. BOX 8923 MADISON, WI 53708-8923 608/831-4444 608/831-7530 FAX

PROJECT NAME: SKF-ASHEVILLE
PROJECT NUMBER: 70144.05
LAB SAMPLE NUMBER: 9092-003
STATION ID: MW 24
WI DNR LAB ID: 113138520

REPORT DATE: 02/19/96
COLLECTION DATE: 02/01/96
ANALYSIS DATE: 02/15/96
METHOD: 8010

VOLATILE ORGANICS ANALYSIS REPORT

COMPOUND	RESULT	EQL	CODE	UNITS
Vinyl chloride	<10	10		ug/L
1,2-Dichloroethene, total	<20	20		ug/L
Trichloroethene	230	10		ug/L

RMT LABORATORIES 744 HEARTLAND TRAIL MADISON, WI 53717-1934 P.O. BOX 8923 MADISON, WI 53708-8923 608/831-4444 608/831-7530 FAX

PROJECT NAME: SKF-ASHEVILLE
PROJECT NUMBER: 70144.05
LAB SAMPLE NUMBER: 9076-010
STATION ID: MW-26
WI DNR LAB ID: 113138520

REPORT DATE: 02/20/96
COLLECTION DATE: 01/30/96
ANALYSIS DATE: 02/07/96
METHOD: 8010

VOLATILE ORGANICS ANALYSIS REPORT

COMPOUND	RESULT	EQL	CODE	UNITS
Vinyl chloride	<1.0	1.0		ug/L
1,2-Dichloroethene, total	7.8	2.0		ug/L
Trichloroethene	1.4	1.0		ug/L

RMT LABORATORIES 744 HEARTLAND TRAIL MADISON, WI 53717-1934 P.O. BOX 8923 MADISON, WI 53708-8923 608/831-4444 608/831-7530 FAX

PROJECT NAME: SKF-ASHEVILLE
PROJECT NUMBER: 70144.05
LAB SAMPLE NUMBER: 9092-002
STATION ID: MW 27
WI DNR LAB ID: 113138520

REPORT DATE: 02/19/96
COLLECTION DATE: 02/01/96
ANALYSIS DATE: 02/15/96
METHOD: 8010

VOLATILE ORGANICS ANALYSIS REPORT

COMPOUND	RESULT	EQL	CODE	UNITS
Vinyl chloride	<1.0	1.0		ug/L
1,2-Dichloroethene, total	<2.0	2.0		ug/L
Trichloroethene	<1.0	1.0		ug/L

RMT LABORATORIES 744 HEARTLAND TRAIL MADISON, WI 53717-1934 P.O. BOX 8923 MADISON, WI 53708-8923 608/831-4444 608/831-7530 FAX

PROJECT NAME: SKF-ASHEVILLE
PROJECT NUMBER: 70144.05
LAB SAMPLE NUMBER: 9092-007
STATION ID: MW 28
WI DNR LAB ID: 113138520

REPORT DATE: 02/19/96
COLLECTION DATE: 02/01/96
ANALYSIS DATE: 02/10/96
METHOD: 02/20/96

VOLATILE ORGANICS ANALYSIS REPORT

COMPOUND	RESULT	EQL	CODE	UNITS
Vinyl chloride	<1.0	1.0		ug/L
1,2-Dichloroethene, total	<2.0	2.0		ug/L
Trichloroethene	<1.0	1.0		ug/L

RMT LABORATORIES 744 HEARTLAND TRAIL MADISON, WI 53717-1934 P.O. BOX 8923 MADISON, WI 53708-8923 608/831-4444 608/831-7530 FAX

PROJECT NAME: SKF-ASHEVILLE
PROJECT NUMBER: 70144.05
LAB SAMPLE NUMBER: 9092-008
STATION ID: MW 28A
WI DNR LAB ID: 113138520

REPORT DATE: 02/19/96
COLLECTION DATE: 02/01/96
ANALYSIS DATE: 02/10/96
METHOD: 8010

VOLATILE ORGANICS ANALYSIS REPORT

COMPOUND	RESULT	EQL	CODE	UNITS
Vinyl chloride	<5.0	5.0		ug/L
1,2-Dichloroethene, total	18	10		ug/L
Trichloroethene	140	5.0		ug/L

RMT LABORATORIES 744 HEARTLAND TRAIL MADISON, WI 53717-1934 P.O. BOX 8923 MADISON, WI 53708-8923 608/831-4444 608/831-7530 FAX

PROJECT NAME: SKF-ASHEVILLE
PROJECT NUMBER: 70144.05
LAB SAMPLE NUMBER: 9092-009
STATION ID: RW 1
WI DNR LAB ID: 113138520

REPORT DATE: 02/19/96
COLLECTION DATE: 02/01/96
ANALYSIS DATE: 02/15/96
METHOD: 8010

VOLATILE ORGANICS ANALYSIS REPORT

COMPOUND	RESULT	EQL	CODE	UNITS
Vinyl chloride	<20	20		ug/L
1,2-Dichloroethene, total	80	40		ug/L
Trichloroethene	260	20		ug/L

RMT LABORATORIES 744 HEARTLAND TRAIL MADISON, WI 53717-1934 P.O. BOX 8923 MADISON, WI 53708-8923 608/831-4444 608/831-7530 FAX

PROJECT NAME: SKF-ASHEVILLE
PROJECT NUMBER: 70144.05
LAB SAMPLE NUMBER: 9076-019
STATION ID: RW-2
WI DNR LAB ID: 113138520

REPORT DATE: 02/20/96
COLLECTION DATE: 01/31/96
ANALYSIS DATE: 02/08/96
METHOD: 8010

VOLATILE ORGANICS ANALYSIS REPORT

COMPOUND	RESULT	EQL	CODE	UNITS
Vinyl chloride	<20	20		ug/L
1,2-Dichloroethene, total	<40	40		ug/L
Trichloroethene	880	20		ug/L

RMT LABORATORIES 744 HEARTLAND TRAIL MADISON, WI 53717-1934 P.O. BOX 8923 MADISON, WI 53708-8923 608/831-4444 608/831-7530 FAX

PROJECT NAME: SKF-ASHEVILLE
PROJECT NUMBER: 70144.05
LAB SAMPLE NUMBER: 9076-021
STATION ID: RINSE BLANK
WI DNR LAB ID: 113138520

REPORT DATE: 02/20/96
COLLECTION DATE: 01/31/96
ANALYSIS DATE: 02/08/96
METHOD: 8010

VOLATILE ORGANICS ANALYSIS REPORT

COMPOUND	RESULT	EQL	CODE	UNITS
Vinyl chloride	<1.0	1.0		ug/L
1,2-Dichloroethene, total	<2.0	2.0		ug/L
Trichloroethene	<1.0	1.0		ug/L

RMT LABORATORIES 744 HEARTLAND TRAIL MADISON, WI 53717-1934 P.O. BOX 8923 MADISON, WI 53708-8923 608/831-4444 608/831-7530 FAX

PROJECT NAME: SKF-ASHEVILLE
PROJECT NUMBER: 70144.05
LAB SAMPLE NUMBER: 9092-001
STATION ID: TBLK
WI DNR LAB ID: 113138520

REPORT DATE: 02/19/96
COLLECTION DATE: 02/01/96
ANALYSIS DATE: 02/15/96
METHOD: 8010

VOLATILE ORGANICS ANALYSIS REPORT

COMPOUND	RESULT	EQL	CODE	UNITS
Vinyl chloride	<1.0	1.0		ug/L
1,2-Dichloroethene, total	<2.0	2.0		ug/L
Trichloroethene	<1.0	1.0		ug/L

RMT LABORATORIES 744 HEARTLAND TRAIL MADISON, WI 53717-1934 P.O. BOX 8923 MADISON, WI 53708-8923 608/831-4444 608/831-7530 FAX

PROJECT NAME: SKF-ASHEVILLE
PROJECT NUMBER: 70144.05
LAB SAMPLE NUMBER: 9076-001
STATION ID: TBLK
WI DNR LAB ID: 113138520

REPORT DATE: 02/20/96
COLLECTION DATE: 01/30/96
ANALYSIS DATE: 02/07/96
METHOD: 8010

VOLATILE ORGANICS ANALYSIS REPORT

COMPOUND	RESULT	EQL	CODE	UNITS
Vinyl chloride	<1.0	1.0		ug/L
1,2-Dichloroethene, total	<2.0	2.0		ug/L
Trichloroethene	<1.0	1.0		ug/L

RMT LABORATORIES - 744 HEARTLAND TRAIL - MADISON, WI - 53717-1934 - P.O. BOX 8923 - MADISON, WI - 53708-8923 - 608/831-4444 - 608/831-7530 FAX

PROJECT NAME: SKF-ASHEVILLE
PROJECT NUMBER: 70144.05
LAB SAMPLE NUMBER: 9076-011
STATION ID: MW-1
WI DNR LAB ID: 113138520

REPORT DATE: 02/16/96
COLLECTION DATE: 01/30/96
MATRIX TYPE: GW

INORGANIC ANALYSIS REPORT

COMPOUND	RESULT	EQL	CODE	UNITS
Iron, total	120000	100		ug/L
Manganese, total	1300	5.0		ug/L
Solids, total suspended	1300	10		mg/L

RMT LABORATORIES ~ 744 HEARTLAND TRAIL ~ MADISON, WI ~ 53717-1934 ~ P.O. BOX 8923 ~ MADISON, WI ~ 53708-8923 ~ 608/831-4444 ~ 608/831-7530 FAX

PROJECT NAME: SKF-ASHEVILLE
PROJECT NUMBER: 70144.05
LAB SAMPLE NUMBER: 9076-011DIS
STATION ID: MW-1
WI DNR LAB ID: 113138520

REPORT DATE: 02/16/96
COLLECTION DATE: 01/30/96
MATRIX TYPE: GW

INORGANIC ANALYSIS REPORT

COMPOUND	RESULT	EQL	CODE	UNITS
Iron, dissolved	320	100		ug/L
Manganese, dissolved	11	5.0		ug/L

RMT LABORATORIES · 744 HEARTLAND TRAIL · MADISON, WI · 53717-1934 P.O. BOX 8923 · MADISON, WI · 53708-8923 · 608/831-4444 · 608/831-7530 FAX

PROJECT NAME: SKF-ASHEVILLE
PROJECT NUMBER: 70144.05
LAB SAMPLE NUMBER: 9076-014
STATION ID: MW-2
WI DNR LAB ID: 113138520

REPORT DATE: 02/16/96
COLLECTION DATE: 01/31/96
MATRIX TYPE: GW

INORGANIC ANALYSIS REPORT

COMPOUND	RESULT	EQL	CODE	UNITS
Iron, total	2700	100		ug/L
Manganese, total	83	5.0		ug/L
Solids, total suspended	24	10		mg/L

RMT LABORATORIES · 744 HEARTLAND TRAIL · MADISON, WI · 53717-1934 · P.O. BOX 8923 · MADISON, WI · 53708-8923 · 608/831-4444 · 608/831-7530 FAX

PROJECT NAME: SKF-ASHEVILLE
PROJECT NUMBER: 70144.05
LAB SAMPLE NUMBER: 9076-014DIS
STATION ID: MW-2
WI DNR LAB ID: 113138520

REPORT DATE: 02/16/96
COLLECTION DATE: 01/31/96
MATRIX TYPE: GW

INORGANIC ANALYSIS REPORT

COMPOUND	RESULT	EQL	CODE	UNITS
Iron, dissolved	< 100	100		ug/L
Manganese, dissolved	11	5.0		ug/L

RMT LABORATORIES - 744 HEARTLAND TRAIL - MADISON, WI - 53717-1934 - P.O. BOX 8923 - MADISON, WI - 53708-8923 - 608/831-4444 - 608/831-7530 FAX

PROJECT NAME: SKF-ASHEVILLE
PROJECT NUMBER: 70144.05
LAB SAMPLE NUMBER: 9076-020
STATION ID: MW-4
WI DNR LAB ID: 113138520

REPORT DATE: 02/16/96
COLLECTION DATE: 01/31/96
MATRIX TYPE: GW

INORGANIC ANALYSIS REPORT

COMPOUND	RESULT	EQL	CODE	UNITS
Iron, total	4300	100		ug/L
Manganese, total	72	5.0		ug/L
Solids, total suspended	120	10		mg/L

RMT LABORATORIES 744 HEARTLAND TRAIL • MADISON, WI • 53717-1934 • P.O. BOX 8923 • MADISON, WI • 53708-8923 • 608/831-4444 • 608/831-7530 FAX

PROJECT NAME: SKF-ASHEVILLE
PROJECT NUMBER: 70144.05
LAB SAMPLE NUMBER: 9076-020DIS
STATION ID: MW-4
WI DNR LAB ID: 113138520

REPORT DATE: 02/16/96
COLLECTION DATE: 01/31/96
MATRIX TYPE: GW

INORGANIC ANALYSIS REPORT

COMPOUND	RESULT	EQL	CODE	UNITS
Iron, dissolved	< 100	100		ug/L
Manganese, dissolved	33	5.0		ug/L

RMT LABORATORIES 744 HEARTLAND TRAIL - MADISON, WI - 53717-1934 - P.O. BOX 8923 - MADISON, WI - 53708-8923 - 608/831-4444 - 608/831-7530 FAX

PROJECT NAME: SKF-ASHEVILLE
PROJECT NUMBER: 70144.05
LAB SAMPLE NUMBER: 9092-010
STATION ID: MW 5
WI DNR LAB ID: 113138520

REPORT DATE: 02/19/96
COLLECTION DATE: 02/02/96
MATRIX TYPE: GW

INORGANIC ANALYSIS REPORT

COMPOUND	RESULT	EQL	CODE	UNITS
Iron, total	7800	100		ug/L
Manganese, total	120	5.0		ug/L
Solids, total suspended	100	10		mg/L

RMT LABORATORIES · 744 HEARTLAND TRAIL · MADISON, WI · 53717-1934 · P.O. BOX 8923 · MADISON, WI · 53708-8923 · 608/831-4444 · 608/831-7530 FAX

PROJECT NAME: SKF-ASHEVILLE
PROJECT NUMBER: 70144.05
LAB SAMPLE NUMBER: 9092-010DIS
STATION ID: MW 5
WI DNR LAB ID: 113138520

REPORT DATE: 02/19/96
COLLECTION DATE: 02/02/96
MATRIX TYPE: GW

INORGANIC ANALYSIS REPORT

COMPOUND	RESULT	EQL	CODE	UNITS
Iron, dissolved	< 100	100		ug/L
Manganese, dissolved	11	5.0		ug/L

RMT LABORATORIES - 744 HEARTLAND TRAIL - MADISON, WI - 53717-1934 - P.O. BOX 8923 - MADISON, WI - 53708-8923 - 608/831-4444 - 608/831-7530 FAX

PROJECT NAME: SKF-ASHEVILLE
PROJECT NUMBER: 70144.05
LAB SAMPLE NUMBER: 9076-013
STATION ID: MW-6
WI DNR LAB ID: 113138520

REPORT DATE: 02/16/96
COLLECTION DATE: 01/31/96
MATRIX TYPE: GW

INORGANIC ANALYSIS REPORT

COMPOUND	RESULT	EQL	CODE	UNITS
Iron, total	24000	100		ug/L
Manganese, total	810	5.0		ug/L
Solids, total suspended	410	10		mg/L

RMT LABORATORIES ~ 744 HEARTLAND TRAIL ~ MADISON, WI ~ 53717-1934 ~ P.O. BOX 8923 ~ MADISON, WI ~ 53708-8923 ~ 608/831-4444 ~ 608/831-7530 FAX

PROJECT NAME: SKF-ASHEVILLE
PROJECT NUMBER: 70144.05
LAB SAMPLE NUMBER: 9076-013DIS
STATION ID: MW-6
WI DNR LAB ID: 113138520

REPORT DATE: 02/16/96
COLLECTION DATE: 01/31/96
MATRIX TYPE: GW

INORGANIC ANALYSIS REPORT

COMPOUND	RESULT	EQL	CODE	UNITS
Iron, dissolved	200	100		ug/L
Manganese, dissolved	11	5.0		ug/L

RMT LABORATORIES · 744 HEARTLAND TRAIL ~ MADISON, WI ~ 53717-1934 ~ P.O. BOX 8923 ~ MADISON, WI ~ 53708-8923 ~ 608/831-4444 ~ 608/831-7530 FAX

PROJECT NAME: SKF-ASHEVILLE
PROJECT NUMBER: 70144.05
LAB SAMPLE NUMBER: 9076-015
STATION ID: MW-7
WI DNR LAB ID: 113138520

REPORT DATE: 02/16/96
COLLECTION DATE: 01/31/96
MATRIX TYPE: GW

INORGANIC ANALYSIS REPORT

COMPOUND	RESULT	EQL	CODE	UNITS
Iron, total	28000	100		ug/L
Manganese, total	470	5.0		ug/L
Solids, total suspended	230	10		mg/L

RMT LABORATORIES ~ 744 HEARTLAND TRAIL ~ MADISON, WI ~ 53717-1934 ~ P.O. BOX 8923 ~ MADISON, WI ~ 53708-8923 ~ 608/831-4444 ~ 608/831-7530 FAX

PROJECT NAME: SKF-ASHEVILLE
PROJECT NUMBER: 70144.05
LAB SAMPLE NUMBER: 9076-015DIS
STATION ID: MW-7
WI DNR LAB ID: 113138520

REPORT DATE: 02/16/96
COLLECTION DATE: 01/31/96
MATRIX TYPE: GW

INORGANIC ANALYSIS REPORT

COMPOUND	RESULT	EQL	CODE	UNITS
Iron, dissolved	< 100	100		ug/L
Manganese, dissolved	41	5.0		ug/L

RMT LABORATORIES - 744 HEARTLAND TRAIL - MADISON, WI - 53717-1934 - P.O. BOX 8923 - MADISON, WI - 53708-8923 - 608/831-4444 - 608/831-7530 FAX

PROJECT NAME: SKF-ASHEVILLE
PROJECT NUMBER: 70144.05
LAB SAMPLE NUMBER: 9076-016
STATION ID: MW-8
WI DNR LAB ID: 113138520

REPORT DATE: 02/16/96
COLLECTION DATE: 01/31/96
MATRIX TYPE: GW

INORGANIC ANALYSIS REPORT

COMPOUND	RESULT	EQL	CODE	UNITS
Iron, total	900	100		ug/L
Manganese, total	20	5.0		ug/L
Solids, total suspended	48	10		mg/L

RMT LABORATORIES - 744 HEARTLAND TRAIL - MADISON, WI - 53717-1934 - P.O. BOX 8923 - MADISON, WI - 53708-8923 - 608/831-4444 - 608/831-7530 FAX

PROJECT NAME: SKF-ASHEVILLE
PROJECT NUMBER: 70144.05
LAB SAMPLE NUMBER: 9076-016DIS
STATION ID: MW-8
WI DNR LAB ID: 113138520

REPORT DATE: 02/16/96
COLLECTION DATE: 01/31/96
MATRIX TYPE: GW

INORGANIC ANALYSIS REPORT

COMPOUND	RESULT	EQL	CODE	UNITS
Iron, dissolved	< 100	100		ug/L
Manganese, dissolved	< 5.0	5.0		ug/L

RMT LABORATORIES - 744 HEARTLAND TRAIL - MADISON, WI - 53717-1934 - P.O. BOX 8923 - MADISON, WI - 53708-8923 - 608/831-4444 - 608/831-7530 FAX

PROJECT NAME: SKF-ASHEVILLE
PROJECT NUMBER: 70144.05
LAB SAMPLE NUMBER: 9076-017
STATION ID: MW-9
WI DNR LAB ID: 113138520

REPORT DATE: 02/16/96
COLLECTION DATE: 01/31/96
MATRIX TYPE: GW

INORGANIC ANALYSIS REPORT

COMPOUND	RESULT	EQL	CODE	UNITS
Iron, total	2100	100		ug/L
Manganese, total	120	5.0		ug/L
Solids, total suspended	25	10		mg/L

RMT LABORATORIES 744 HEARTLAND TRAIL · MADISON, WI · 53717-1934 · P.O. BOX 8923 · MADISON, WI · 53708-8923 · 608/831-4444 · 608/831-7530 FAX

PROJECT NAME: SKF-ASHEVILLE
PROJECT NUMBER: 70144.05
LAB SAMPLE NUMBER: 9076-017DIS
STATION ID: MW-9
WI DNR LAB ID: 113138520

REPORT DATE: 02/16/96
COLLECTION DATE: 01/31/96
MATRIX TYPE: GW

INORGANIC ANALYSIS REPORT

COMPOUND	RESULT	EQL	CODE	UNITS
Iron, dissolved	210	100		ug/L
Manganese, dissolved	120	5.0		ug/L

RMT LABORATORIES · 744 HEARTLAND TRAIL ~ MADISON, WI ~ 53717-1934 ~ P.O. BOX 8923 ~ MADISON, WI ~ 53708-8923 ~ 608/831-4444 ~ 608/831-7530 FAX

PROJECT NAME: SKF-ASHEVILLE
PROJECT NUMBER: 70144.05
LAB SAMPLE NUMBER: 9076-018
STATION ID: MW-10
WI DNR LAB ID: 113138520

REPORT DATE: 02/16/96
COLLECTION DATE: 01/31/96
MATRIX TYPE: GW

INORGANIC ANALYSIS REPORT

COMPOUND	RESULT	EQL	CODE	UNITS
Iron, total	9600	100		ug/L
Manganese, total	74	5.0		ug/L
Solids, total suspended	110	10		mg/L

RMT LABORATORIES - 744 HEARTLAND TRAIL - MADISON, WI - 53717-1934 - P.O. BOX 8923 - MADISON, WI - 53708-8923 - 608/831-4444 - 608/831-7530 FAX

PROJECT NAME: SKF-ASHEVILLE
PROJECT NUMBER: 70144.05
LAB SAMPLE NUMBER: 9076-018DIS
STATION ID: MW-10
WI DNR LAB ID: 113138520

REPORT DATE: 02/16/96
COLLECTION DATE: 01/31/96
MATRIX TYPE: GW

INORGANIC ANALYSIS REPORT

COMPOUND	RESULT	EQL	CODE	UNITS
Iron, dissolved	< 100	100		ug/L
Manganese, dissolved	8.9	5.0		ug/L

RMT LABORATORIES 744 HEARTLAND TRAIL ~ MADISON, WI ~ 53717-1934 ~ P.O. BOX 8923 ~ MADISON, WI ~ 53708-8923 ~ 608/831-4444 608/831-7530 FAX

PROJECT NAME: SKF-ASHEVILLE
PROJECT NUMBER: 70144.05
LAB SAMPLE NUMBER: 9092-011
STATION ID: MW 11
WI DNR LAB ID: 113138520

REPORT DATE: 02/19/96
COLLECTION DATE: 02/02/96
MATRIX TYPE: GW

INORGANIC ANALYSIS REPORT

COMPOUND	RESULT	EQL	CODE	UNITS
Iron, total	5500	100		ug/L
Manganese, total	140	5.0		ug/L
Solids, total suspended	250	10		mg/L

RMT LABORATORIES ~ 744 HEARTLAND TRAIL ~ MADISON, WI ~ 53717-1934 ~ P.O. BOX 8923 ~ MADISON, WI ~ 53708-8923 ~ 608/831-4444 ~ 608/831-7530 FAX

PROJECT NAME: SKF-ASHEVILLE
PROJECT NUMBER: 70144.05
LAB SAMPLE NUMBER: 9092-011DIS
STATION ID: MW 11
WI DNR LAB ID: 113138520

REPORT DATE: 02/19/96
COLLECTION DATE: 02/02/96
MATRIX TYPE: GW

INORGANIC ANALYSIS REPORT

COMPOUND	RESULT	EQL	CODE	UNITS
Iron, dissolved	< 100	100		ug/L
Manganese, dissolved	< 5.0	5.0		ug/L

RMT LABORATORIES ~ 744 HEARTLAND TRAIL ~ MADISON, WI ~ 53717-1934 ~ P.O. BOX 8923 ~ MADISON, WI ~ 53708-8923 ~ 608/831-4444 ~ 608/831-7530 FAX

PROJECT NAME: SKF-ASHEVILLE
PROJECT NUMBER: 70144.05
LAB SAMPLE NUMBER: 9076-006
STATION ID: MW-15
WI DNR LAB ID: 113138520

REPORT DATE: 02/16/96
COLLECTION DATE: 01/30/96
MATRIX TYPE: GW

INORGANIC ANALYSIS REPORT

COMPOUND	RESULT	EQL	CODE	UNITS
Iron, total	1300	100		ug/L
Manganese, total	810	5.0		ug/L
Solids, total suspended	34	10		mg/L

RMT LABORATORIES 744 HEARTLAND TRAIL MADISON, WI 53717-1934 P.O. BOX 8923 MADISON, WI 53708-8923 608/831-4444 608/831-7530 FAX

PROJECT NAME: SKF-ASHEVILLE
PROJECT NUMBER: 70144.05
LAB SAMPLE NUMBER: 9076-006DIS
STATION ID: MW-15
WI DNR LAB ID: 113138520

REPORT DATE: 02/20/96
COLLECTION DATE: 01/30/96
MATRIX TYPE: GW

INORGANIC ANALYSIS REPORT

COMPOUND	RESULT	EQL	CODE	UNITS
Iron, dissolved	< 100	100		ug/L
Manganese, dissolved	860	5.0	DA	ug/L

RMT LABORATORIES - 744 HEARTLAND TRAIL - MADISON, WI - 53717-1934 - P.O. BOX 8923 - MADISON, WI - 53708-8923 - 608/831-4444 - 608/831-7530 FAX

PROJECT NAME: SKF-ASHEVILLE
PROJECT NUMBER: 70144.05
LAB SAMPLE NUMBER: 9076-012
STATION ID: MW-15A
WI DNR LAB ID: 113138520

REPORT DATE: 02/16/96
COLLECTION DATE: 01/30/96
MATRIX TYPE: GW

INORGANIC ANALYSIS REPORT

COMPOUND	RESULT	EQL	CODE	UNITS
Iron, total	12000	100		ug/L
Manganese, total	4800	5.0		ug/L
Solids, total suspended	180	10		mg/L

RMT LABORATORIES 744 HEARTLAND TRAIL MADISON, WI 53717-1934 P.O. BOX 8923 MADISON, WI 53708-8923 608/831-4444 608/831-7530 FAX

PROJECT NAME: SKF-ASHEVILLE
PROJECT NUMBER: 70144.05
LAB SAMPLE NUMBER: 9076-012DIS
STATION ID: MW-15A
WI DNR LAB ID: 113138520

REPORT DATE: 02/20/96
COLLECTION DATE: 01/30/96
MATRIX TYPE: GW

INORGANIC ANALYSIS REPORT

COMPOUND	RESULT	EQL	CODE	UNITS
Iron, dissolved	2100	100		ug/L
Manganese, dissolved	7600	5.0	DF	ug/L

RMT LABORATORIES 744 HEARTLAND TRAIL MADISON, WI 53717-1934 P.O. BOX 8923 MADISON, WI 53708-8923 608/831-4444 608/831-7530 FAX

SAMPLE NARRATIVE
INORGANIC ANALYSIS

PROJECT NAME: SKF - ASHEVILLE
PROJECT NUMBER: 70144.05
WORKORDER NUMBER: 9076
DATE: 2/20/96

The dissolved manganese result for LIMS sample number 9076-012DIS was greater than the total manganese result. The total sample concentration was 4800 ppb and the dissolved concentration was 7600 ppb. The dissolved sample was visually inspected in comparison with the total sample in their original containers. The dissolved sample was much clearer than the total which would confirm that it most likely was filtered. The total sample was then redigested and the result concentration was 5000 ppb. With no further explanation for the difference between the dissolved and total results, the dissolved result was reported with a DF qualifier.

RMT LABORATORIES ~ 744 HEARTLAND TRAIL ~ MADISON, WI ~ 53717-1934 ~ P.O. BOX 8923 ~ MADISON, WI ~ 53708-8923 ~ 608/831-4444 ~ 608/831-7530 FAX

PROJECT NAME: SKF-ASHEVILLE
PROJECT NUMBER: 70144.05
LAB SAMPLE NUMBER: 9076-007
STATION ID: MW-16
WI DNR LAB ID: 113138520

REPORT DATE: 02/16/96
COLLECTION DATE: 01/30/96
MATRIX TYPE: GW

INORGANIC ANALYSIS REPORT

COMPOUND	RESULT	EQL	CODE	UNITS
Iron, total	5900	100		ug/L
Manganese, total	180	5.0		ug/L
Solids, total suspended	43	10		mg/L

RMT LABORATORIES 744 HEARTLAND TRAIL ~ MADISON, WI ~ 53717-1934 ~ P.O. BOX 8923 ~ MADISON, WI ~ 53708-8923 ~ 608/831-4444 ~ 608/831-7530 FAX

PROJECT NAME: SKF-ASHEVILLE
PROJECT NUMBER: 70144.05
LAB SAMPLE NUMBER: 9076-007DIS
STATION ID: MW-16
WI DNR LAB ID: 113138520

REPORT DATE: 02/16/96
COLLECTION DATE: 01/30/96
MATRIX TYPE: GW

INORGANIC ANALYSIS REPORT

COMPOUND	RESULT	EQL	CODE	UNITS
Iron, dissolved	1600	100		ug/L
Manganese, dissolved	180	5.0		ug/L

RMT LABORATORIES - 744 HEARTLAND TRAIL - MADISON, WI - 53717-1934 - P.O. BOX 8923 - MADISON, WI - 53708-8923 - 608/831-4444 - 608/831-7530 FAX

PROJECT NAME: SKF-ASHEVILLE
PROJECT NUMBER: 70144.05
LAB SAMPLE NUMBER: 9076-008
STATION ID: MW-16A
WI DNR LAB ID: 113138520

REPORT DATE: 02/16/96
COLLECTION DATE: 01/30/96
MATRIX TYPE: GW

INORGANIC ANALYSIS REPORT

COMPOUND	RESULT	EQL	CODE	UNITS
Iron, total	2300	100		ug/L
Manganese, total	58	5.0		ug/L
Solids, total suspended	30	10		mg/L

RMT LABORATORIES 744 HEARTLAND TRAIL - MADISON, WI - 53717-1934 - P.O. BOX 8923 - MADISON, WI - 53708-8923 - 608/831-4444 - 608/831-7530 FAX

PROJECT NAME: SKF-ASHEVILLE
PROJECT NUMBER: 70144.05
LAB SAMPLE NUMBER: 9076-008DIS
STATION ID: MW-16A
WI DNR LAB ID: 113138520

REPORT DATE: 02/16/96
COLLECTION DATE: 01/30/96
MATRIX TYPE: GW

INORGANIC ANALYSIS REPORT

COMPOUND	RESULT	EQL	CODE	UNITS
Iron, dissolved	310	100		ug/L
Manganese, dissolved	49	5.0		ug/L

RMT LABORATORIES - 744 HEARTLAND TRAIL - MADISON, WI - 53717-1934 - P.O. BOX 8923 - MADISON, WI - 53708-8923 - 608/831-4444 - 608/831-7530 FAX

PROJECT NAME: SKF-ASHEVILLE
PROJECT NUMBER: 70144.05
LAB SAMPLE NUMBER: 9076-022
STATION ID: DUP 01 (MW-16A)
WI DNR LAB ID: 113138520

REPORT DATE: 02/16/96
COLLECTION DATE: 01/31/96
MATRIX TYPE: GW

INORGANIC ANALYSIS REPORT

COMPOUND	RESULT	EQL	CODE	UNITS
Iron, total	2700	100		ug/L
Manganese, total	63	5.0		ug/L
Solids, total suspended	26	10		mg/L

RMT LABORATORIES · 744 HEARTLAND TRAIL · MADISON, WI · 53717-1934 · P.O. BOX 8923 · MADISON, WI · 53708-8923 · 608/831-4444 · 608/831-7530 FAX

PROJECT NAME: SKF-ASHEVILLE
PROJECT NUMBER: 70144.05
LAB SAMPLE NUMBER: 9076-022DIS
STATION ID: DUP 01 (MW-16A)
WI DNR LAB ID: 113138520

REPORT DATE: 02/16/96
COLLECTION DATE: 01/31/96
MATRIX TYPE: GW

INORGANIC ANALYSIS REPORT

COMPOUND	RESULT	EQL	CODE	UNITS
Iron, dissolved	330	100		ug/L
Manganese, dissolved	50	5.0		ug/L

RMT LABORATORIES ~ 744 HEARTLAND TRAIL ~ MADISON, WI ~ 53717-1934 ~ P.O. BOX 8923 ~ MADISON, WI ~ 53708-8923 ~ 608/831-4444 ~ 608/831-7530 FAX

PROJECT NAME: SKF-ASHEVILLE
PROJECT NUMBER: 70144.05
LAB SAMPLE NUMBER: 9076-002
STATION ID: MW-20
WI DNR LAB ID: 113138520

REPORT DATE: 02/16/96
COLLECTION DATE: 01/30/96
MATRIX TYPE: GW

INORGANIC ANALYSIS REPORT

COMPOUND	RESULT	EQL	CODE	UNITS
Iron, total	30000	100		ug/L
Manganese, total	1500	5.0		ug/L
Solids, total suspended	51	10		mg/L

RMT LABORATORIES 744 HEARTLAND TRAIL · MADISON, WI · 53717-1934 P.O. BOX 8923 MADISON, WI 53708-8923 608/831-4444 608/831-7530 FAX

PROJECT NAME: SKF-ASHEVILLE
PROJECT NUMBER: 70144.05
LAB SAMPLE NUMBER: 9076-002DIS
STATION ID: MW-20
WI DNR LAB ID: 113138520

REPORT DATE: 02/20/96
COLLECTION DATE: 01/30/96
MATRIX TYPE: GW

INORGANIC ANALYSIS REPORT

COMPOUND	RESULT	EQL	CODE	UNITS
Iron, dissolved	27000	100		ug/L
Manganese, dissolved	1700	5.0	DA	ug/L

RMT LABORATORIES - 744 HEARTLAND TRAIL - MADISON, WI - 53717-1934 - P.O. BOX 8923 - MADISON, WI - 53708-8923 - 608/831-4444 - 608/831-7530 FAX

PROJECT NAME: SKF-ASHEVILLE
PROJECT NUMBER: 70144.05
LAB SAMPLE NUMBER: 9076-019
STATION ID: RW-2
WI DNR LAB ID: 113138520

REPORT DATE: 02/16/96
COLLECTION DATE: 01/31/96
MATRIX TYPE: GW

INORGANIC ANALYSIS REPORT

COMPOUND	RESULT	EQL	CODE	UNITS
Iron, total	8200	100		ug/L
Manganese, total	210	5.0		ug/L
Solids, total suspended	19	10		mg/L

RMT LABORATORIES ~ 744 HEARTLAND TRAIL ~ MADISON, WI ~ 53717-1934 ~ P.O. BOX 8923 ~ MADISON, WI ~ 53708-8923 ~ 608/831-4444 ~ 608/831-7530 FAX

PROJECT NAME: SKF-ASHEVILLE
PROJECT NUMBER: 70144.05
LAB SAMPLE NUMBER: 9076-019DIS
STATION ID: RW-2
WI DNR LAB ID: 113138520

REPORT DATE: 02/16/96
COLLECTION DATE: 01/31/96
MATRIX TYPE: GW

INORGANIC ANALYSIS REPORT

COMPOUND	RESULT	EQL	CODE	UNITS
Iron, dissolved	380	100		ug/L
Manganese, dissolved	190	5.0		ug/L

RMT LABORATORIES ~ 744 HEARTLAND TRAIL ~ MADISON, WI ~ 53717-1934 ~ P.O. BOX 8923 ~ MADISON, WI 53708-8923 ~ 608/831-4444 ~ 608/831-7530 FAX

PROJECT NAME: SKF-ASHEVILLE
PROJECT NUMBER: 70144.05
LAB SAMPLE NUMBER: 9076-021
STATION ID: RINSE BLANK
WI DNR LAB ID: 113138520

REPORT DATE: 02/16/96
COLLECTION DATE: 01/31/96
MATRIX TYPE: GW

INORGANIC ANALYSIS REPORT

COMPOUND	RESULT	EQL	CODE	UNITS
Iron, total	< 100	100		ug/L
Manganese, total	< 5.0	5.0		ug/L
Solids, total suspended	< 10	10		mg/L

RMT LABORATORIES - 744 HEARTLAND TRAIL - MADISON, WI - 53717-1934 - P.O. BOX 8923 - MADISON, WI - 53708-8923 - 608/831-4444 - 608/831-7530 FAX

PROJECT NAME: SKF-ASHEVILLE
PROJECT NUMBER: 70144.05
LAB SAMPLE NUMBER: 9076-021DIS
STATION ID: RINSE BLANK
WI DNR LAB ID: 113138520

REPORT DATE: 02/16/96
COLLECTION DATE: 01/31/96
MATRIX TYPE: GW

INORGANIC ANALYSIS REPORT

COMPOUND	RESULT	EQL	CODE	UNITS
Iron, dissolved	< 100	100		ug/L
Manganese, dissolved	< 5.0	5.0		ug/L

RMT LABORATORIES 744 HEARTLAND TRAIL MADISON, WI 53717-1934 P.O. BOX 8923 MADISON, WI 53708-8923 608/831-4444 608/831-7530 FAX

Inorganic Data Qualifier Sheet

DA Dissolved analyte greater than total analyte; analyses passed QC based on precision criteria.

DF Dissolved analyte greater than total analyte; analyses failed QC based on precision criteria. (See Sample Narrative).

Summary of Analysis

The samples were equilibrated in a 25°C water bath, weighed and 10ml removed and reweighed and placed in the 25°C water bath for at least an hour. An aliquot of the headspace was then injected in a Hewlett Packard Model 5890 Series II Gas Chromatograph equipped with a Hewlett Packard Chem Station. A J&W 50 meter by 0.53 millimeter alumina capillary column was used.

Gas Chromatograph Conditions were:

Oven Temperature	40°C
Run Time	6.0 Minutes
Injector Temperature	150°C
Flame Ionization Detector Temp.	200°C
Helium Flow	6.8 Milliliters/Minute
Auxiliary Gas	31.6 Milliliters/Minute
Hydrogen	30.5 Milliliters/Minute
Air	382 Milliliters/Minute
Injection Volume	1 Milliliter

Henry's Law constants were determined by injecting the same volume of each of the gasses into 40ml vials from which 10ml and 20ml respectively were removed.

A 100 area count was considered the detection limit.

TABLE I Gasses in Water

Lab No.	Field No.	Methane	Ethane	Ethene
14292	9076-002	846 μg/L	13.2 μg/L	ND<6.3μg/L
14293	9076-003	1,101 μg/L	9.9 μg/L	ND<6.3μg/L
14294	9076-004	14 μg/L	8.4 μg/L	ND<6.3μg/L
14295	9076-005	10.7 μg/L	7.3 μg/L	ND<6.3μg/L
14296	9076-006	19.4 μg/L	<6.0 μg/L	ND<6.3μg/L
14297	9076-007	14.0 μg/L	<6.0 μg/L	ND<6.3μg/L
14298	9076-008	8.7 μg/L	ND<6.0 μg/L	ND<6.3μg/L
14299	9076-011	10.5 μg/L	ND<6.0 μg/L	ND<6.3μg/L
14300	9076-012	23.2 μg/L	ND<6.0 μg/L	ND<6.3μg/L
14301	9076-013	14.6 μg/L	ND<6.0 μg/L	ND<6.3μg/L
14302	9076-014	10.0 μg/L	ND<6.0 μg/L	ND<6.3μg/L
14303	9076-015	19.1 μg/L	ND<6.0 μg/L	ND<6.3μg/L

NOTE: Samples are not blank corrected for Methane.

TABLE I Gasses in Water

Lab No.	Field No.	Methane	Ethane	Ethene
14304	9076-016	11.0μg/L	ND<6.0 μg/L	ND<6.3μg/L
14305	9076-017	13.2μg/L	ND<6.0 μg/L	ND<6.3μg/L
14306	9076-018	12.0μg/L	ND<6.0 μg/L	ND<6.3μg/L
14307	9076-019	1,180μg/L	ND<6.0 μg/L	ND<6.3μg/L
14308	9076-020	15.9μg/L	ND<6.0 μg/L	ND<6.3μg/L
14309	9076-021	11.0μg/L	ND<6.0 μg/L	ND<6.3μg/L
14310	9076-022	11.0μg/L	ND<6.0 μg/L	ND<6.3μg/L
14311	9076-023	13.6μg/L	ND<6.0 μg/L	ND<6.3μg/L
Limit of Detection		7.4μg/L	6.0μg/L	6.3μg/L

NOTE: Samples are not blank corrected for Methane.

RMT INC.
LABORATORIES

SUBCONTRACTED
ANALYTICAL WORK REQUEST

1 of 2

PO # 45020

To: Prism Analytical

RMT, Inc.
744 Heartland Trail
P.O. Box 8923
Madison, WI 53708-8923
Phone: 608-831-4444
FAX: 608-831-7530

Attention: Sample Receipt

Please refer to the Purchase Order above on all data, billing, or correspondence regarding these samples. Send the results and invoice to the attention of Kathleen Walker.

Results required by: 2-15-96.

NOTE: If the quote below is not accurate, please notify the contact person above immediately.

ANALYTICAL WORK REQUEST:

9076 RMT Lab #	Sample Description PRISM		Date Sampled	Analysis Requested	#/Type of Bottle	Quoted Price
002	MW-20	14292	1.30.96	Ethene, Ethane, methane	2-40ml vial	
003	MW-13	14293				
004	MW-12	14294				
005	MW-17	14295				
006	MW-15	14296				
007	MW-16	14297				
008	MW-16A	14298				
011	MW-1	14299				
012	MW-15A	14300				
013	MW-6	14301	1.31.96			

TOTAL FOR PURCHASE ORDER: $

CHAIN OF CUSTODY:

Relinquished by: [signature]	Date: 2-1-96	Time: 250
Received by: [signature] - Prism	Date: 2-1-96	Time: 16:20

SAMPLES SHIPPED VIA: Purolator's

RMT Project Number: 70144.05

2 of 2

RMT INC.
LABORATORIES

SUBCONTRACTED
ANALYTICAL WORK REQUEST

PO # 45020

To: Prism Analytical

RMT, Inc.
744 Heartland Trail
P.O. Box 8923
Madison, WI 53708-8923
Phone: 608-831-4444
FAX: 608-831-7530

Attention: Sample Receipt

Please refer to the Purchase Order above on all data, billing, or correspondence regarding these samples. Send the results and invoice to the attention of Kathleen Walker.

Results required by: 2-15-96.

NOTE: If the quote below is not accurate, please notify the contact person above immediately.

ANALYTICAL WORK REQUEST:

9096 RMT Lab #	Sample Description	Date Sampled	14302 Analysis Requested	#/Type of Bottle	Quoted Price
014	MW-2	1.31.96	Ethane, Ethene, methane	2-40ml vial	
015	MW-7		14303		
016	MW-8		14304		
017	MW-9		14305		
018	MW-10		14306		
019	RW-2		14307		
020	MW-4		14308		
021	RBLK-01		14309		
022	DUP 01	—	14310		
023	TBLK 002	—	14311	3-40ml vial	

TOTAL FOR PURCHASE ORDER: $ _____

CHAIN OF CUSTODY:

Relinquished by: [signature]	Date: 2.1.96	Time: 250p
Received by: [signature]	Date: 2-1-96	Time: 1620

SAMPLES SHIPPED VIA: Dunham's RMT Project Number: 70144.05

Summary of Analysis

The samples were equilibrated in a 25°C water bath, weighed and 10ml removed and reweighed and placed in the 25°C water bath for at least an hour. An aliquot of the headspace was then injected in a Hewlett Packard Model 5890 Series II Gas Chromatograph equipped with a Hewlett Packard Chem Station. A J&W 50 meter by 0.53 millimeter alumina capillary column was used.

Gas Chromatograph Conditions were:

Oven Temperature	40°C
Run Time	6.0 Minutes
Injector Temperature	150°C
Flame Ionization Detector Temp.	200°C
Helium Flow	6.8 Milliliters/Minute
Auxiliary Gas	31.6 Milliliters/Minute
Hydrogen	30.5 Milliliters/Minute
Air	382 Milliliters/Minute
Injection Volume	1 Milliliter

Henry's Law constants were determined by injecting the same volume of each of the gasses into 40ml vials from which 10ml and 20ml respectively were removed.

A 100 area count was considered the detection limit.

TABLE I Gasses in Water

Lab No.	Field No.	Methane	Ethane	Ethene
14353	9092-010	16.3μg/L	ND<6.0 μg/L	ND<6.3μg/L
14354	9092-011	10.7μg/L	ND<6.0 μg/L	ND<6.3μg/L
14355	9092-015	10.8μg/L	ND<6.0 μg/L	ND<6.3μg/L
Limit of Detection		7.4μg/L	6.0μg/L	6.3μg/L

NOTE: Samples are not blank corrected for Methane.

RMT INC.
LABORATORIES

SUBCONTRACTED
ANALYTICAL WORK REQUEST

PO # 45023

To: Prism

RMT, Inc.
744 Heartland Trail
P.O. Box 8923
Madison, WI 53708-8923
Phone: 608-831-4444
FAX: 608-831-7530

Attention:

Please refer to the Purchase Order above on all data, billing, or correspondence regarding these samples. Send the results and invoice to the attention of Kathleen Walker.

Results required by: Feb. 23, 1996.

NOTE: If the quote below is not accurate, please notify the contact person above immediately.

ANALYTICAL WORK REQUEST:

RMT Lab #	Sample Description	Date Sampled	Analysis Requested	#/Type of Bottle	Quoted Price
9092-010	MW-5 14353	2/2/96	Ethene, Ethane, Methane	2 x 40ml vial HCl	
9092-011	MW-11 14354	2/2/96	Ethene, Ethane, Methane	2 x 40ml HCl vial	
9092-015	Trip Blank 14355	–	Ethene, Ethane, Methane	3 x 40ml vial HCl	

TOTAL FOR PURCHASE ORDER: $

CHAIN OF CUSTODY:

Relinquished by: KASherfinski	Date: 2-6-96	Time: 12 pm
Received by: [illegible]	Date: 2-6-96	Time: 13:15

SAMPLES SHIPPED VIA: ~~Fedex~~ Dunham's

RMT Project Number: 70144.05 SKF-Asheville

Appendix C
Equipment Vendor Cut Sheets

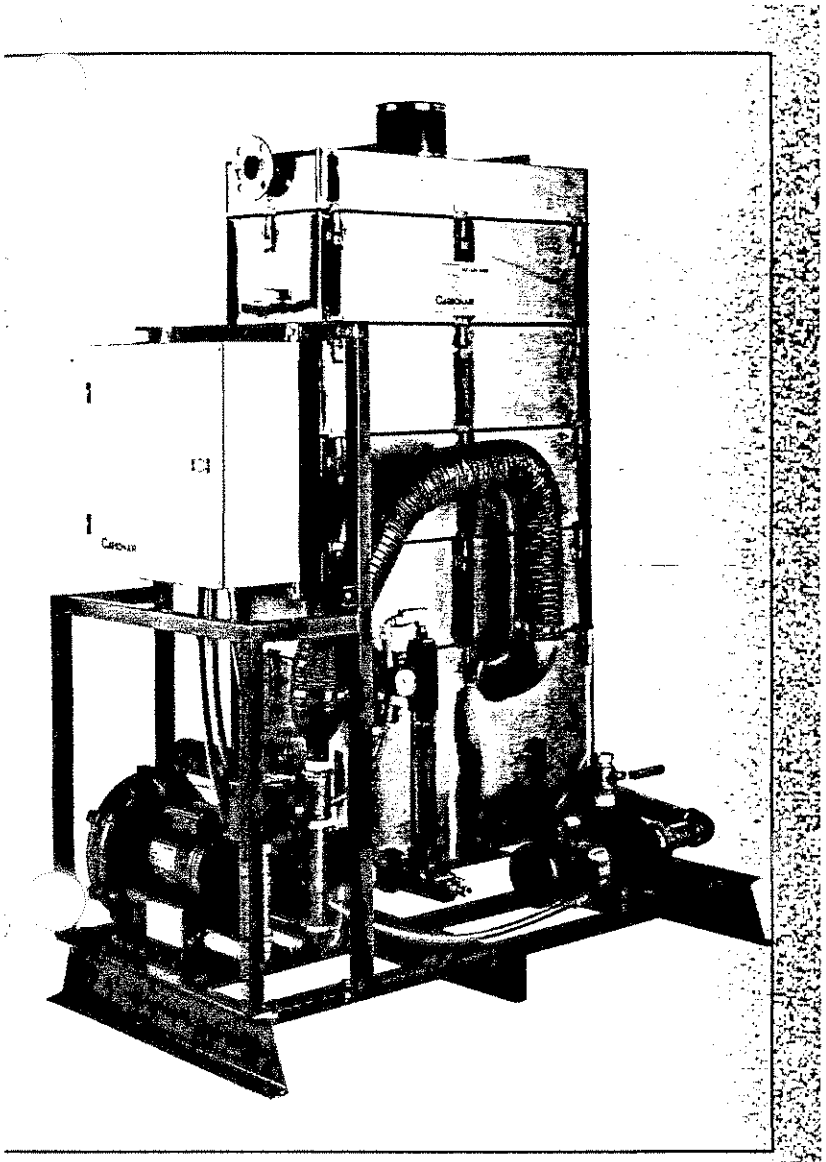

U.S. Patents Pending.

Modeling software lets you design your own STAT.

Accurate, proven STAT modeling software is available to help you size and design the STAT system best suited for your needs based on flow rate and the type and concentration of contaminants.

STAT systems are guaranteed.

All STAT units – whether provided as stand-alone units or as part of large, integrated systems – are guaranteed to perform to agreed-upon levels based on the conditions specified.

Contact us with the details of your next air stripping job. We'll tell you which STAT unit can do the best job for you, what it will cost and what kind of results you can expect based on past performance in similar situations.

STAT is engineered for instant start-up and easy operation.

STAT units are designed for instant start-up. They can be prewired and prepiped to eliminate complex field installation. And with STAT, the first drop of water passing through the system is treated to your removal requirement; no system priming is required. STAT units are also less likely to foul than packed column air strippers and have very low maintenance requirements.

CARBONAIR

8640 Monticello Lane
Maple Grove, MN 55369-4547
Tel. 612/425-2992
1/800-526-4999 • Fax 612/425-6882

There are other low profile air stripper units around, but not one offers more engineering advantages than our STAT™ system.

The Carbonair STAT delivers high removal efficiencies for a wide range of VOCs at flow rates from 0.5 to 200 gpm. It does it in a very compact, cost-saving, low profile unit. And its efficiency makes possible substantial operating cost reductions.

It's The Carbonair STAT™ System – The Best Low Profile Air Stripper Available.

STAT is the most cost-effective answer to today's VOC removal problems.

Because the STAT operates with the lowest air-to-water ratio of any low profile air stripper, air flows through the system at a lower cfm and is more heavily laden with contaminants. This makes off-gas treatment – whether carbon adsorption or oxidation – far more cost-efficient. (The graph below shows the off-gas carbon costs at different air-to-water ratios.) Measured against competitive low profile units, the STAT can save thousands of dollars a year in off-gas treatment cost.

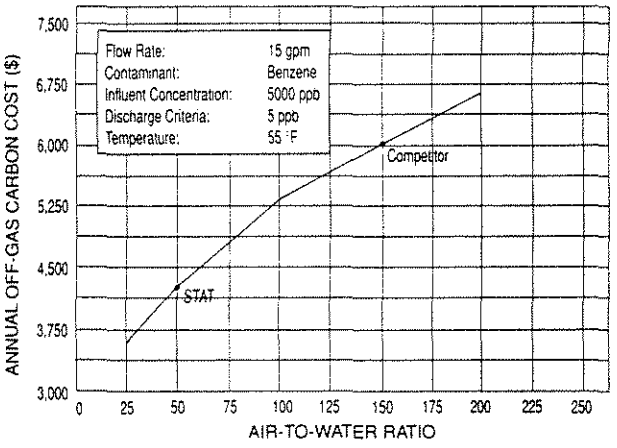

The air-to-water ratio of STAT systems is significantly lower than that of other low profile strippers. As a result, carbon cost savings of 20-50% are possible depending on the type and concentration of the contaminants.

STAT can be the answer to tomorrow's problems as well.

Even if you're not required to treat your off-gas now, you may have to in the future. STAT – because of its low air flow design – will make compliance with these regulations easier and less expensive.

CARBONAIR®
ENVIRONMENTAL SYSTEMS

CARBONAIR ENVIRONMENTAL SYSTEMS, INC.
8640 MONTICELLO LANE
MAPLE GROVE, MINNESOTA
55369-4547
612•425•2992 800•526•4999
FAX 612•425•6882

HOUSTON OFFICE
8876 GULF FREEWAY
SUITE 245
HOUSTON, TEXAS 77017
713•941•5570
800•449•0184 PAGER
713•941•5591 FAX

Monday, April 22, 1996

Proposal # 206755

RMT
100 Verdae Blvd.
Greenville SC 29607
Attn: Mr. David Roos

Dear Mr. Roos,

Thank you for the opportunity to provide budgetary pricing information for the air stripper application we discussed. Please review the following and feel free to call with any questions or commments.

Low-Profile Air Stripper

1	Carbonair Model STAT 80 - 6 Tray Low Profile Air Stripper Complete with:	$ 14,795.00

- Stainless Steel Sump, Trays, and Demister Section.
- Pumpout Discharge.
- Epoxy Coated, Carbon Steel Subskid.
- I. S. Low Blower Pressure Switch.
- 7.5 H.P., TEFC, 350 CFM @ 38" WC Blower.
- Sight Glass Assembly.
- Sampling Ports
- Temperature Gauge.
- High Sump Level switch.
- Pressure Gauge.
- 1.0 H.P., TEFC, 3 Phase, Discharge Pump.

Please see attached modeling.

Control Panel Assembly

NEMA 4 Enclosed Control System complete with Motor Starters, HOA Switches, I.S. Relays for all integral System Components, and Status Lights.

General Conditions

CARBONAIR

Please be aware that complex chemical reactions can occur in the presence of chlorinated compounds. These reactions may reduce strippability of targeted compounds.
This proposal and pricing are based on our interpretation of the specifications that have been made available to us.
Prices quoted do not include any installation costs.
All Prices are FOB Maple Grove, MN.
Terms of payment are Net 30 days with approved credit.
Proposal is subject to the attached terms and conditions.
Proposal and pricing valid for 30 days.
Shipping charges are not included in the quoted prices. Shipping charges will be prepaid and added to invoice.
Sales Tax is not included in the quoted prices. Where required, sales tax will be added to the invoice.

Carbonair has been successfully providing Remediation Systems to the Environmental Industry since 1983. Our committment has always been to provide our customers with the best available equipment coupled with the best available customer service at a fair price. The opening of our new office in Houston is a reflection of that committment. We look forward to working with you and will be happy to answer any questions that you may have regarding this or any other application. Please feel free to contact me anytime at 713-941-5570 or 1-800-526-4999.

Sincerely,

Ed Butler

Ed Butler
Southeast Regional Manager

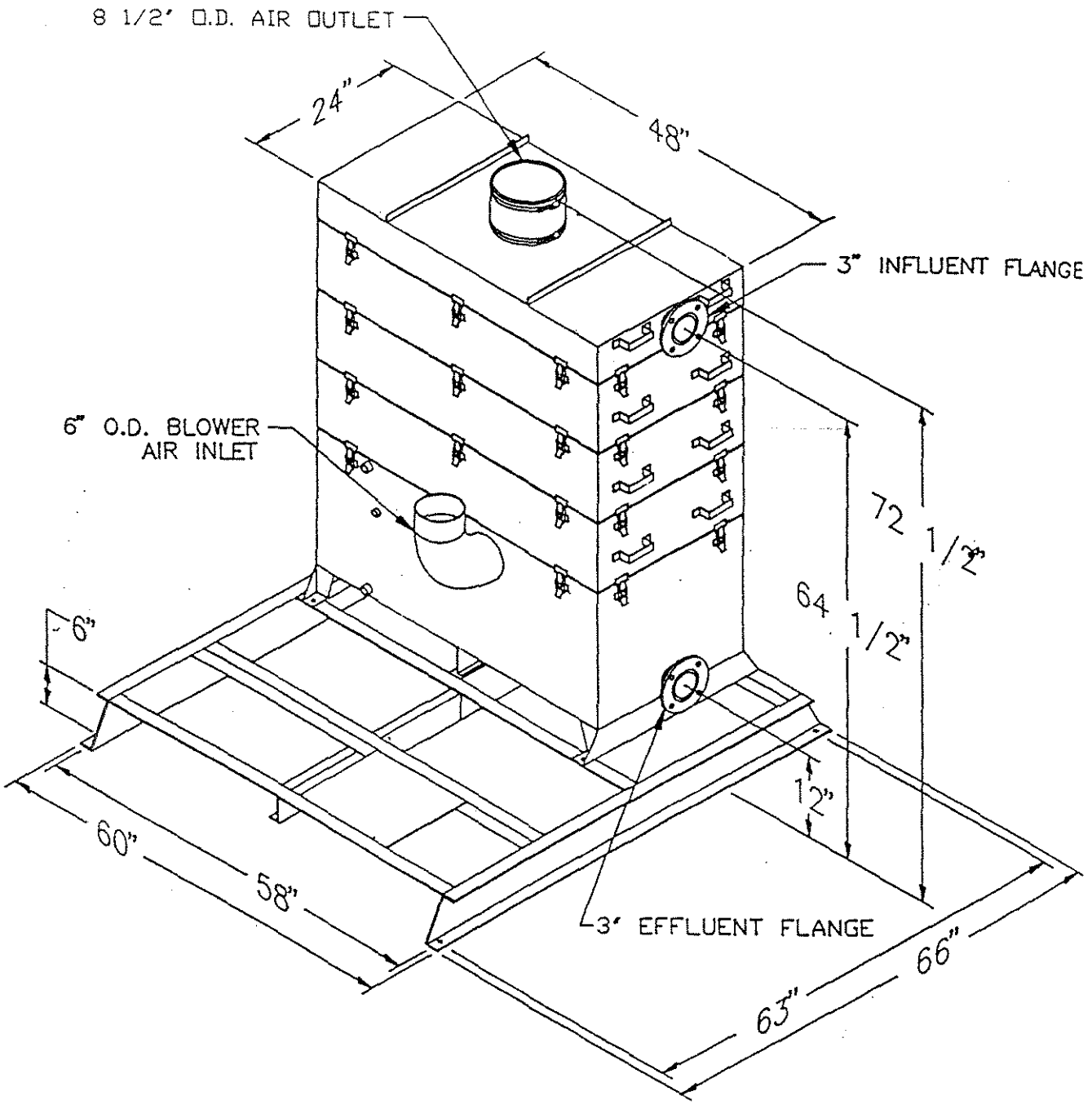

NOTE: Adjust overall height by 10 1/4" for each aeration tray added or deleted. Influent flange on the same side as effluent with odd number of trays.

Sales Drawing #133575
94.05.09
©CARBONAIR 1994

STAT 80 W/ ROTRON & OPTIONAL KITS

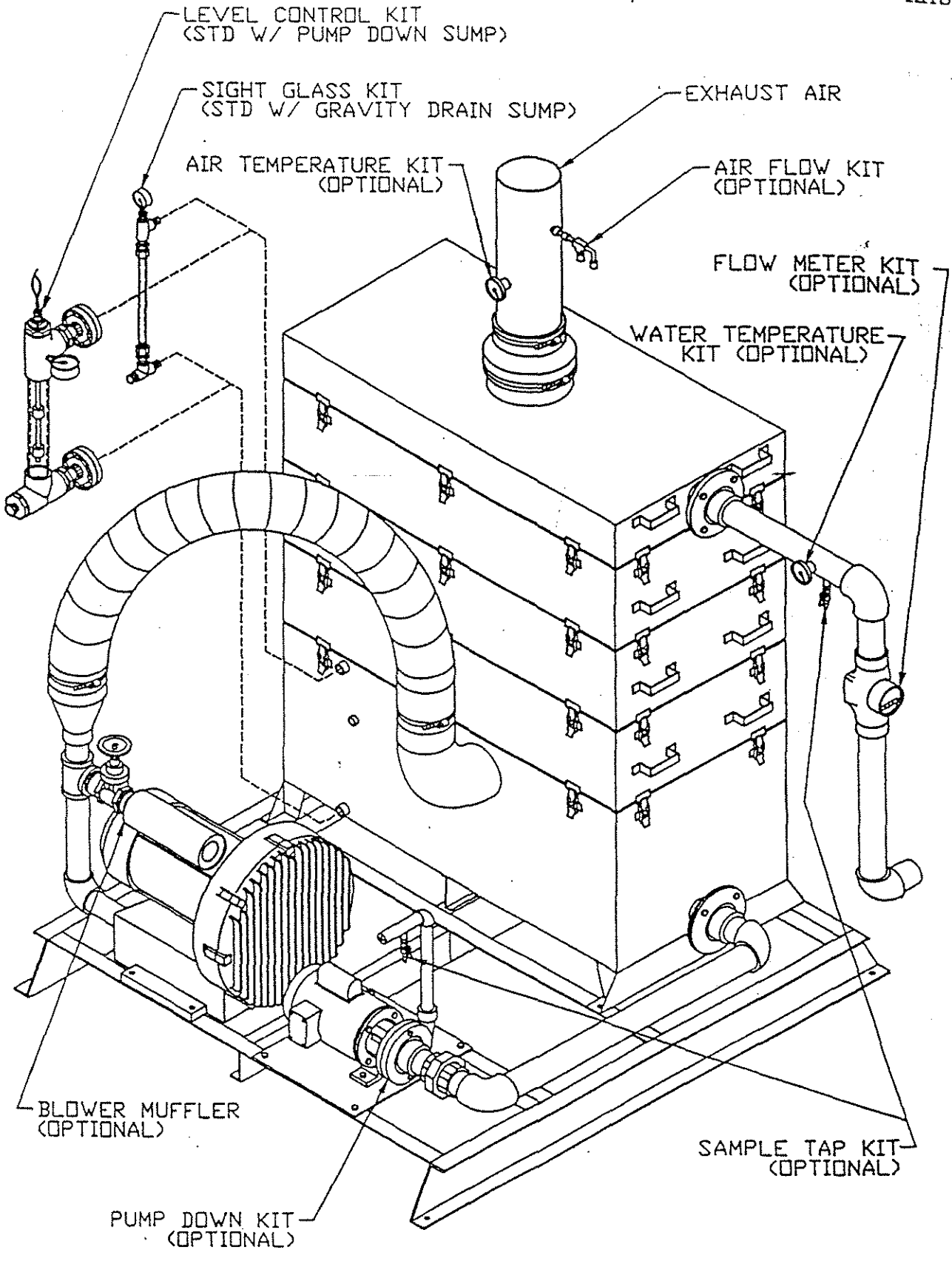

Sales Drawing #133380
94.05.20
©CARBONAIR 1994

NEW!

Grundfos MS Series

Stainless Steel Submersible Motors

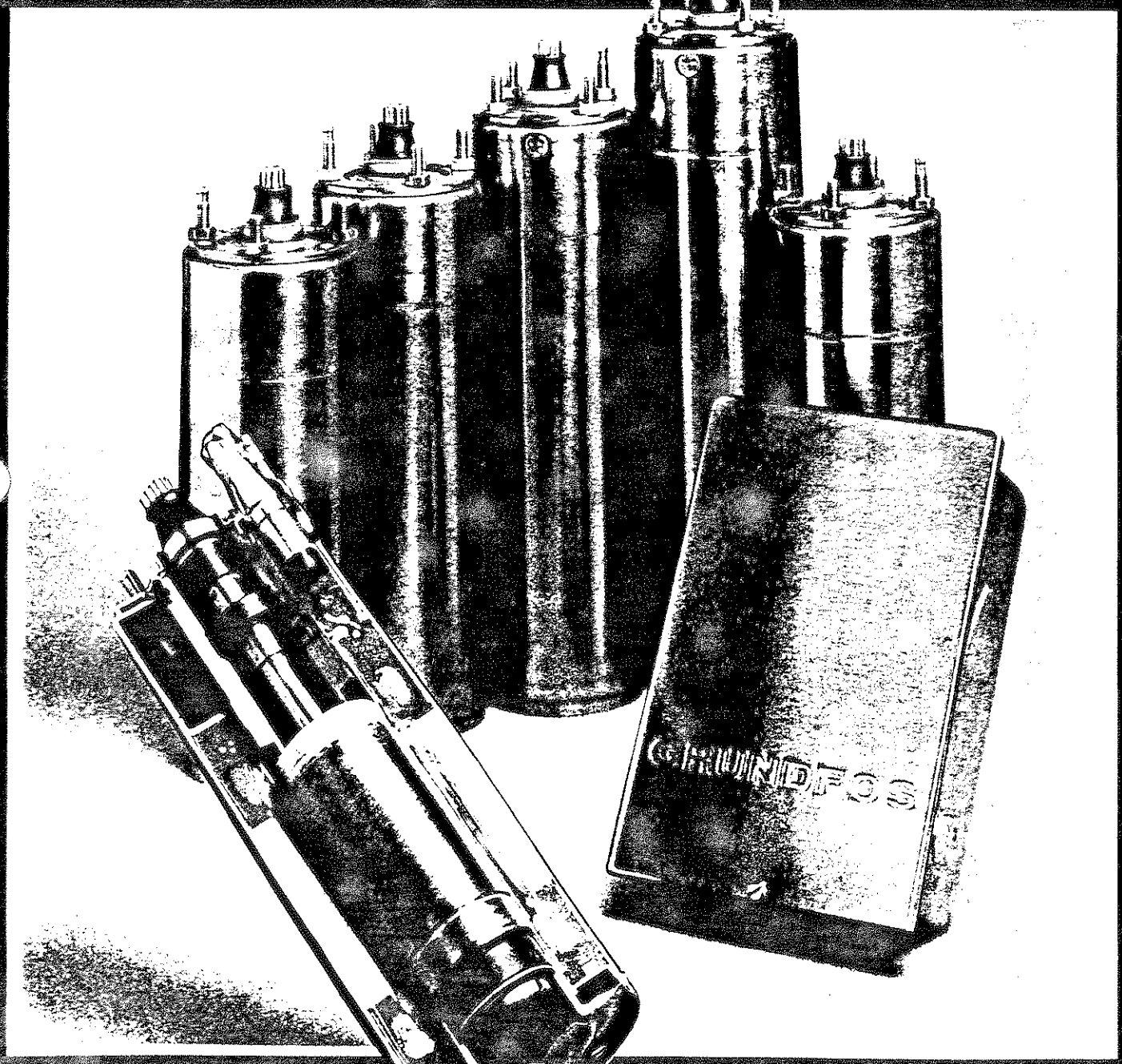

GRUNDFOS®

The Best Built Motor in America

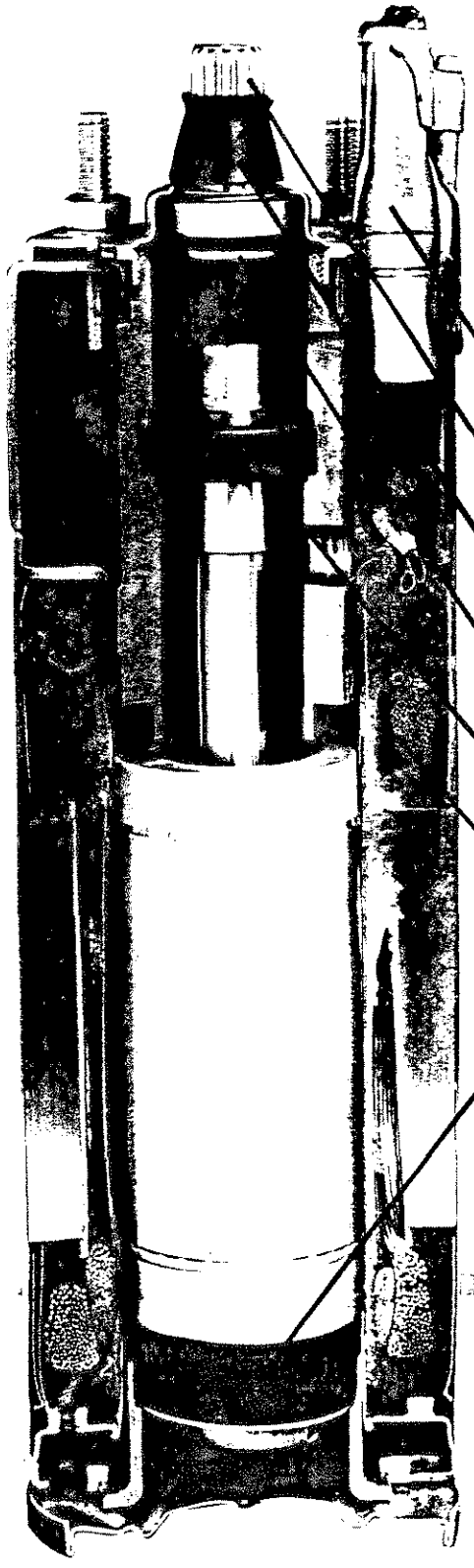

- **Self-Cooling.**
- **High Starting Torque.**
- **Heavy-Duty Thrust Bearing.**

Heat. It's the major killer of submersible motors, and the leading cause of premature failure.

That's why Grundfos designed a self-cooling system so efficient that the motor runs cool in water temperatures up to 104°, and requires no shroud or flow inducer. And the Grundfos submersible motor uses large reservoirs with three times more internal fluid coolant when compared to other submersible motors.

Pig-tail plug — for reliable, water-tight snap-in seal.

Heavy-duty shaft — cool-formed stainless steel shaft resists stripping and wear.

Effective sand slinger — inhibits sand from entering motor.

Face seal and upthrust bearing — tungsten carbide on ceramic limits fluid interchange.

Long-lasting radial bearing — tungsten carbide on ceramic for years of wear resistant operation.

Hermetically sealed stator — imbedded in heat resistant, long-lasting epoxy resin.

440 lb. thrust bearing — heavy-duty, 3-pad bearing handles significantly more downthrust than other comparable motors. A 1000 lb. thrust bearing is found in larger motors.

Four-inch three wire motors available in 1/3rd through 5 horsepower:

Grundfos Motors

HP	Phase	Volt	Svc. Factor	Thrust
1/3	1	230	1.75	440#
1/2	1	230	1.60	440#
3/4	1	230	1.50	440#
1	1	230	1.40	440#
1 1/2	1	230	1.3	440#

HP	Phase	Volt	Svc. Factor	Thrust
1 1/2	3	230/460	1.3	440#
2	3	230/460	1.25	440#
3	3	230/460	1.15	1000#
5	3	230/460	1.15	1000#

GRUNDFOS®

Pump Corporation
2555 Clovis Ave., P.O. Box 549, Clovis, CA 93613, (209) 292-8000, TELEX 35-5353

SP-SL-019-02 | 6/86
Replaces SP-SL-019-0
Printed in U.S.A.

AUTOMATED DESIGN AND MANUFACTURING PROCESSES ASSURE QUALITY CONSTRUCTION, TOP PERFORMANCE, AND LONG OPERATING LIFE.

Exclusive Grundfos Designs

1. FAIL-SAFE CHECK VALVE DESIGN: Grundfos stainless steel check valves are built into the top pump chamber to prevent backflow. These positive, non-clogging, non-slamming valves are sized to meet the maximum pressures for each model.

2. STAINLESS STEEL FABRICATION YIELDS MAXIMUM HYDRAULIC PERFORMANCE: Grundfos fabrication techniques for stainless steel permit ideal shaping of impeller and diffuser vanes for top performance and high efficiency.

3. EXCLUSIVE PRIMING INDUCER PROTECTS AGAINST DRY RUNNING: The exclusive Grundfos priming inducer protects against damage due to dry running should water levels drop unexpectedly in the well. Located inside the suction interconnector at the pump inlet, this small, axial flow screw provides enough water to lubricate the pump until the well has time to recover.

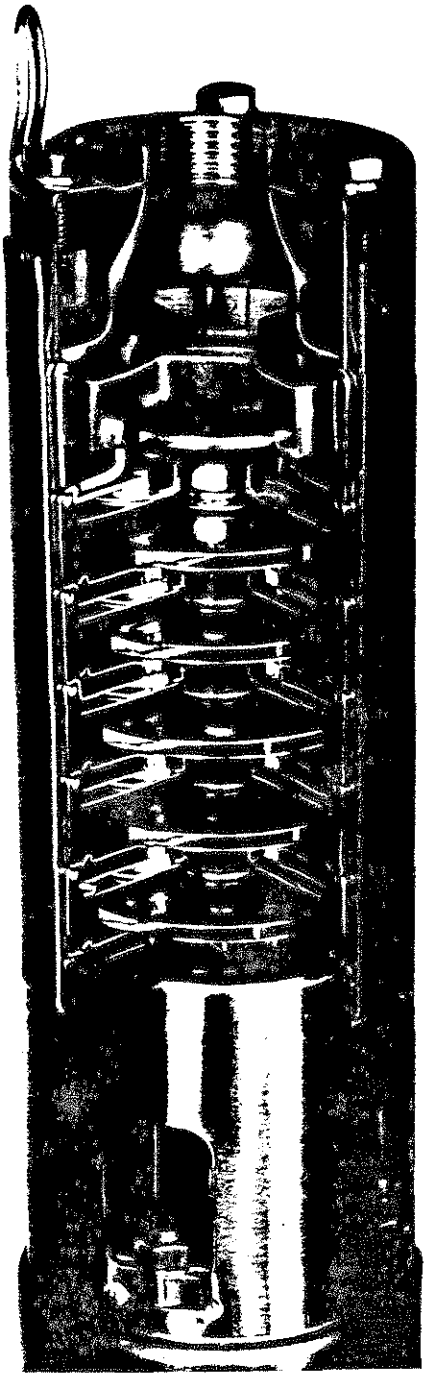

Pump Selection Guide

MODEL	MIN. WELL SIZE	FLOW RANGE (GPM)	MAX. HEAD (FEET)	MAX. HEAD (PSI)
4 Inch & Larger Wells				
5S	4"	1.2-7	870	377
7S	4"	3-10	680	294
10S	4"	5-14	950	411
16S	4"	10-20	990	429
25S	4"	18-32	630	273
40S	4" & 6"	24-55	755	327
60S	4"	40-75	505	219
75S	4"	45-95	460	199
6, 8, 10-Inch & Larger Wells				
80S	6"	48-110	845	366
135S	6"	75-200	835	361
225S	6" & 8"	150-290	680	294
375S	8"	230-500	310	134
600S	10"	350-800	420	182
1000S	10"	600-1300	575	249
Deep Set				
5S-DS	4"	1.2-7	1330	576
10S-DS	4" & 5"	5-14	1550	671
16S-DS	6"	10-20	1980	857
25S-DS	6"	18-32	1255	543
40S-DS	6"	24-55	1655	716
80S-DS	6" & 8"	48-110	1745	755
135S-DS	8"	75-200	1910	827
225S-DS	8"	150-290	1220	528
375S-DS	8"	230-500	1080	467
600S-DS	10"	350-800	590	255
1000S-DS	10"	600-1300	860	372

Electrodes.

General application electrodes.

Series 3R. These electrodes are metallic rods with one end threaded so they can be screwed into the couplings on electrode fittings to extend vertically down into the liquid. They are available in a variety of materials to satisfy the requirements of water and many corrosive solutions. Series 3T, tapered electrode, used in conjunction with fitting 3G.

Series 3W. Series 3W electrodes are metallic bars contained within a protective plastic shield. They are suspended above the liquid by the use of PVC-insulated wires. ⅞" dia. x 3¾" in length.

Table 23-1 General Application Electrodes

Series	Style	Material	Wetting	Ordering Information (Page)
3RXXXX 3TXXXX		Brass 303 SS 316 SS Carp. 20 Hast. B Hast. C Monel Titanium		31
3WX*		Brass 303 SS		31

*To attach 3W to 3E, 3F or 3N fittings, 371A wire and a 321B adapter kit are required. One adapter required for each electrode.

Corrosion-resistant electrode.

Series 3Y. Corrosion-resistant metallic bars within a protective plastic shield designed for use in corrosive liquid applications. Suspension wire is PVC-jacketed and is attached to the electrode at the factory. ⅞" dia. x 3½" in length.

Table 23-2 Corrosion-Resistant Electrode

Series	Style	Tip Material	Shield Material	Ordering Information (Page)
3YXXX		Carp. 20 Hast. B Hast. C 316 SS		31

Chart 23-3 Sensitivity-Material Selection

Liquid Or Material	Sensitivity-Conductivity Ohms/cm	Micro-Mhos/cm	Electrode Material Good*	Better**
†Acids	Consult Factory		Consult Factory	
Aluminum Hydroxide	2.2K	450	316 SS	Titan
Aluminum Sulfate	2.2K	450	303 SS	Hast. C
Ammonia	5K	200	316 SS	N.A.
Ammonium Chloride	1K	1K	316 SS	Titan.
Ammonium Hydroxide	10K	100	316 SS	Titan.
Ammonium Nitrate	18K	50	303 SS	316 SS
Ammonium Sulfate	10K	100	316 SS	Titan.
Baby Foods	1K	1K	303 SS	316 SS
Barium Chloride	1K	1K	Carp. 20	N.A.
Barium Nitrate	1K	1K	316 SS	N.A.
Beer	2.2K	450	303 SS	316 SS
Black Liquor	1K	1K	Consult Factory	
Borax Aqueous	10K	100	Brass	303 SS
Bourbon	200K	5	N.A.	316 SS
Brine	1K	1K	N.A.	Hast. C
Buttermilk	1K	1K	N.A.	316 SS
Cadmium Chloride	1K	1K	316 SS	N.A.
Cadmium Nitrate	1K	1K	316 SS	N.A.
Cake Batter	5K	200	303 SS	316 SS
Calcium Chloride	1K	1K	Carp. 20	Hast. C
Calcium Hydroxide	10K	100	316 SS	Titan.
Catsup	2.2K	450	303 SS	316 SS
Caustic Soda	1K	1K	316 SS	Hast. B
Cement Slurry	5K	200	303 SS	316 SS
Coffee	2.2K	450	303 SS	316 SS
Corn Syrup	45K	21	303 SS	316 SS
Corn—Cream Style	2.2K	450	303 SS	316 SS
Ferric Chloride	10K	100	N.A.	Titan.
Ferrous Sulfate	10K	100	Carp. 20	Titan.
Ink (Water Base)	2.2K	450	N.A.	316 SS
Jams/Jellies	45K	21	303 SS	316 SS
Juices—Fruit/Vegetable	1K	1K	303 SS	316 SS
Lithium Chloride	1K	1K	N.A.	Carp. 20
Magnesium Chloride	1K	1K	316 SS	Carp. 20
Magnesium Hydroxide	2.2K	450	316 SS	N.A.
Mayonnaise	5K	200	303 SS	316 SS
Mercuric Chloride	90K	11	N.A.	Titan.
Milk	1K	1K	303 SS	316 SS
Molasses	10K	100	303 SS	316 SS
Mustard	1K	1K	303 SS	316 SS
Oil- Soluble	10K	100	N.A.	303 SS
Paper Stock	5K	200	Titan.	N.A.
Photographic Solutions	1K	1K	316 SS	Hast. C
Plating Solutions	2.2K	450	N.A.	316 SS
Potassium Chloride	1K	1K	316 SS	Titan.
Salts—Chemical	2.2K	450	Monel	N.A.
Sewage	5K	200	303 SS	316 SS
Silver Nitrate	1K	1K	316 SS	Carp. 20
Soap Foam	18K	50	303 SS	316 SS
Sodium Carbonate	2.2K	450	316 SS	Monel
Sodium Hydroxide	1K	1K	316 SS	Hast. B
Soups	1K	1K	303 SS	316 SS
Starch Solutions	5K	200	303 SS	316 SS
Sugar Solutions	90K	11	303 SS	316 SS
Vinegar Aqueous	2.2K	450	316 SS	Carp. 20
Water—Carbonated	3K	330	303 SS	316 SS
Water—Condensate	18K	50	Brass	303 SS
Water- Chlorinated	5K	200	316 SS	Monel
Water—Distilled	450K	2	Brass	303 SS
Water—Deionized	2.0M	.5	Brass	303 SS
Water -Hard/Natural	5K	200	Brass	303 SS
Water—Salt	2.2K	450	Monel	N.A.
Wine	2.2K	450	303 SS	316 SS
Zinc Chloride	1K	1K	Carp. 20	Titan.
Zinc Sulfate	2.2K	450	316 SS	Titan.

*Less than .020" erosion per year.

**Less than .002" erosion per year.

†Note: Liquid concentration and temperature will affect conductivity and material erosion rate. Contact factory for detailed information.

N.A. —No material available with this erosion rate.

Controls.

CAUTION: When the atmosphere surrounding the electrodes and/or associated wiring to the control is, or may become potentially explosive, an intrinsically safe control should be used. (See page 18 for Intrinsically safe Series 17, 27 and 37.)

- **U.L. approval.** To simplify approval of OEM equipment, models are available with "Motor Controller" (U.L. 508) and/or "Limit Control" (U.L. 353) recognitions.
- **Compact, low-cost design.** Reduces necessary panel space.
- **LED indication.** Quick, easy monitoring of control status. Easy troubleshooting.
- **Optional time delays.** Provide splash protection, minimize cycle rate and eliminate need for external timers.
- **Built-in surge protection.** Momentary power surges will not affect operation or damage circuitry.
- **Low-voltage sensing circuit.** Eliminates the shock hazard to personnel.

Solid state—plug-in modules.

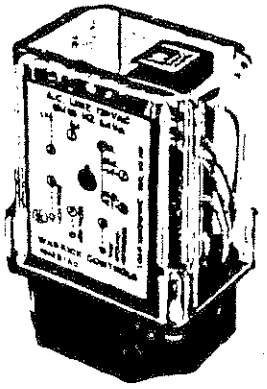

Series 16M. Designed for either differential or single-level service. U.L. "Motor Controller" listing, CSA. 8-pin socket with screw-type connections makes the unit easy to install and service. Sensitivity of up to 1 million OHMS-centimeter. The Series 16 is also available in a high-sensitivity version (Series 16HM-5.5 MOHM sensitivity).

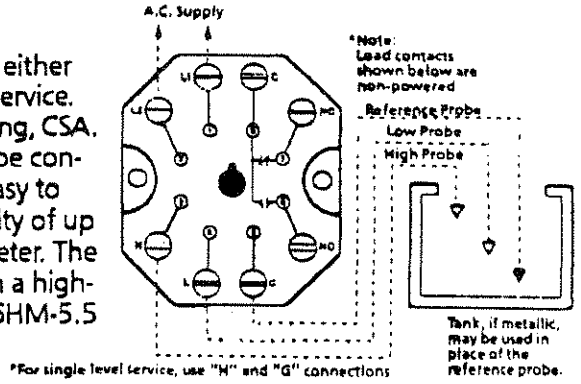

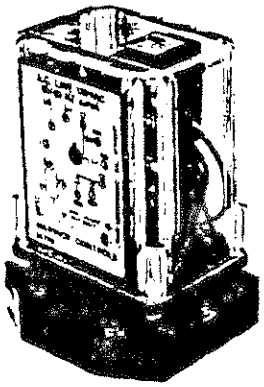

Series 16DM. Similar to Series 16M but with DPDT load contacts. Eliminates the need for slave relays. 11-pin socket. Requires little panel space. General use applications. U.L., CSA listed.

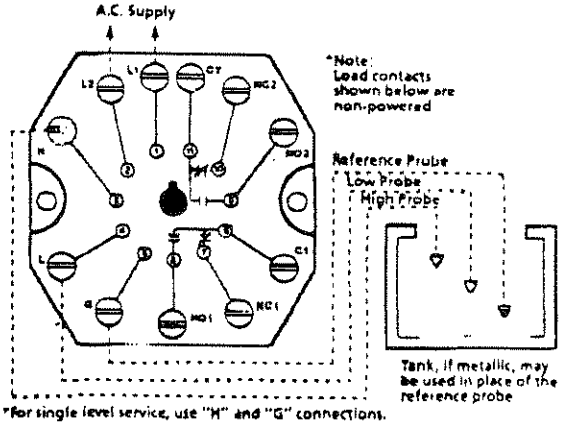

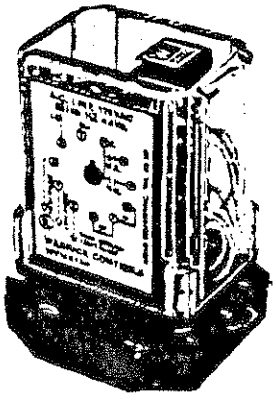

Series 16VM. Similar to the Series 16M but with the added flexibility of field changeable sensitivity, made possible through external setpoint resistors. Uses 11-pin socket. U.L., CSA listed.

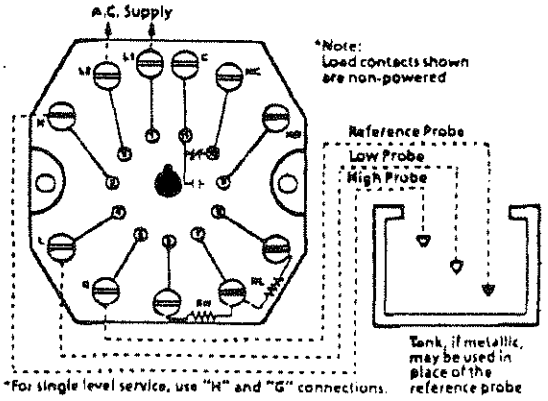

Appendix D
Engineering Calculations

DESIGN BASIS

Background

The remediation of the SKF-Girmes property will be directed to two areas of the property. These areas are the southwest and the northeast plumes. The existing SKF facility is located in the center of the property. It is presently being used as a storage facility only.

The contaminants to be removed are trichloroethylene, 1,2 dichloroethylene, and vinyl chloride. The maximum detected concentrations for each of these is 11 ppm, 0.67 ppm, and 0.029 ppm.

Refer to the site drawings for the specific location and elevation of the proposed wells and the existing facilities.

Remediation Alternatives

The southwest plume is estimated to have 5 recovery wells at 3 gpm each. Natural remediation is proposed for the northeast plume.

Treatment System

The treatment system will be a surge tank, booster pump, and an air stripper. This level of treatment is required even if the effluent is discharged to the sewer. The air stripper's operation will be controlled by water level in the surge tank.

Air discharged from the air stripper will be at levels which will not require treatment.

Discharge Location

There are two options for the discharge location: existing sewer or NPDES permit. The advantage of the NPDES permit is no sewer fee, but a higher level of monitoring is required.

The cost to discharge to the sewer is as follows:

- initial fee.
- approximately $2.46 per 100 cubic feet, or $3.29 per 1000 gallons.

Existing Storage Tank

A storage tank exists on the site and is available for use with the system. Possible uses include the following:

- Holding tank to allow treated water to be discharged to sewer at specific times. This would be pursued only if favorable sewer rates could be obtained.

- Holding tank prior to allow treated water to be discharged to NPDES. The possible advantage of this would be fewer monitoring controls required.

Available Utilities

Assume 480V, 3 phase power is available at existing building. The possibility exists that power, or air if required, can be obtained from the Dotson property.

Carbonair Environmental Systems
8640 Monticello Lane
Maple Grove, MN 55369
612-425-2992 800-526-4999
Fax: 612-425-6882

04/22/96
08:41:46

----------STAT 180----------
VERSION 2.5

WATER FLOW RATE: 40.0 gpm
AIR FLOW RATE: 650.0 cfm
WATER TEMPERATURE: 55.0 F
AIR-TO-WATER RATIO: 122:1

Influent Conc. for TRICHLOROETHENE 10000.0 ppb

NO OF TRAY	REMOVAL EFF %	EFF CONC ppb	OFF-GAS CONC ug/l	AIR EMISSION lb/d
1	93.06880	693.1203	76.2859	4.4693
2	99.50646	49.3538	81.5627	4.7784
3	99.96479	3.5209	81.9384	4.8004
4	99.99749	0.2512	81.9652	4.8020
5	99.99982	0.0179	81.9671	4.8021
6	99.99999	0.0013	81.9672	4.8021

Influent Conc. for 1,2-DICHLOROETHENE (TRANS) 10000.0 ppb

NO OF TRAY	REMOVAL EFF %	EFF CONC ppb	OFF-GAS CONC ug/l	AIR EMISSION lb/d
1	90.03508	996.4919	73.7992	4.3236
2	98.96028	103.9719	81.1150	4.7522
3	99.89101	10.8990	81.8779	4.7969
4	99.98857	1.1431	81.9578	4.8016
5	99.99880	0.1199	81.9662	4.8021
6	99.99987	0.0126	81.9671	4.8021

Influent Conc. for VINYL CHLORIDE 10000.0 ppb

NO OF TRAY	REMOVAL EFF %	EFF CONC ppb	OFF-GAS CONC ug/l	AIR EMISSION lb/d
1	98.31871	168.1287	80.5891	4.7214
2	99.97164	2.8361	81.9440	4.8008
3	99.99952	0.0478	81.9668	4.8021
4	99.99999	0.0008	81.9672	4.8021
5	100.00000	0.0000	81.9672	4.8021
6	100.00000	0.0000	81.9672	4.8021

Influent Conc. for TOTAL VOCs 30000.0 ppb

NO OF TRAY	REMOVAL EFF %	EFF CONC ppb	OFF-GAS CONC ug/l	AIR EMISSION lb/d
1	93.80753	1857.7409	230.6743	13.5142
2	99.47946	156.1618	244.6216	14.3314
3	99.95177	14.4678	245.7831	14.3994
4	99.99535	1.3951	245.8902	14.4057
5	99.99954	0.1378	245.9005	14.4063
6	99.99995	0.0139	245.9015	14.4063

Carbonair Environmental Systems
8640 Monticello Lane
Maple Grove, MN 55369
612-425-2992 800-526-4999
Fax: 612-425-6882

04/22/96
08:40:29

----------STAT 80----------
VERSION 2.5

WATER FLOW RATE: 40.0 gpm
AIR FLOW RATE: 350.0 cfm
WATER TEMPERATURE: 55.0 F
AIR-TO-WATER RATIO: 65:1

Influent Conc. for TRICHLOROETHENE 10000.0 ppb

NO OF TRAY	REMOVAL EFF %	EFF CONC ppb	OFF-GAS CONC ug/l	AIR EMISSION lb/d
1	76.14232	2385.7676	117.1420	3.6564
2	94.11357	588.6433	144.7901	4.5194
3	98.53582	146.4178	151.5936	4.7318
4	99.63507	36.4927	153.2847	4.7846
5	99.90900	9.0998	153.7062	4.7977
6	99.97731	2.2694	153.8112	4.8010

Influent Conc. for 1,2-DICHLOROETHENE (TRANS) 10000.0 ppb

NO OF TRAY	REMOVAL EFF %	EFF CONC ppb	OFF-GAS CONC ug/l	AIR EMISSION lb/d
1	71.35013	2864.9870	109.7694	3.4263
2	91.33786	866.2142	140.5198	4.3861
3	97.33983	266.0172	149.7536	4.6744
4	99.17917	82.0826	152.5833	4.7627
5	99.74636	25.3644	153.4559	4.7899
6	99.92159	7.8414	153.7255	4.7983

Influent Conc. for VINYL CHLORIDE 10000.0 ppb

NO OF TRAY	REMOVAL EFF %	EFF CONC ppb	OFF-GAS CONC ug/l	AIR EMISSION lb/d
1	88.46276	1153.7236	136.0966	4.2481
2	98.66227	133.7735	151.7881	4.7379
3	99.84480	15.5199	153.6074	4.7947
4	99.98199	1.8007	153.8185	4.8012
5	99.99791	0.2089	153.8429	4.8020
6	99.99976	0.0242	153.8458	4.8021

Influent Conc. for TOTAL VOCs 30000.0 ppb

NO OF TRAY	REMOVAL EFF %	EFF CONC ppb	OFF-GAS CONC ug/l	AIR EMISSION lb/d
1	78.65174	6404.4782	363.0080	11.3308
2	94.70456	1588.6310	437.0980	13.6435
3	98.57348	427.9549	454.9545	14.2008
4	99.59875	120.3760	459.6865	14.3485
5	99.88442	34.6732	461.0050	14.3897
6	99.96622	10.1351	461.3825	14.4015

MODEL
5S

5 GPM

GRUNDFOS

FLOW RANGE
1.2 to 7 GPM

PUMP OUTLET
1" NPT

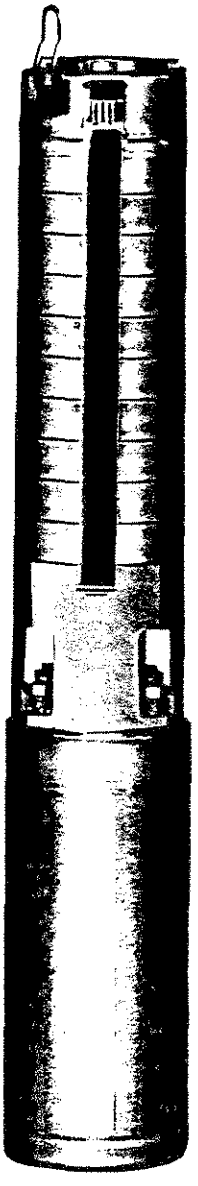

PERFORMANCE CURVES

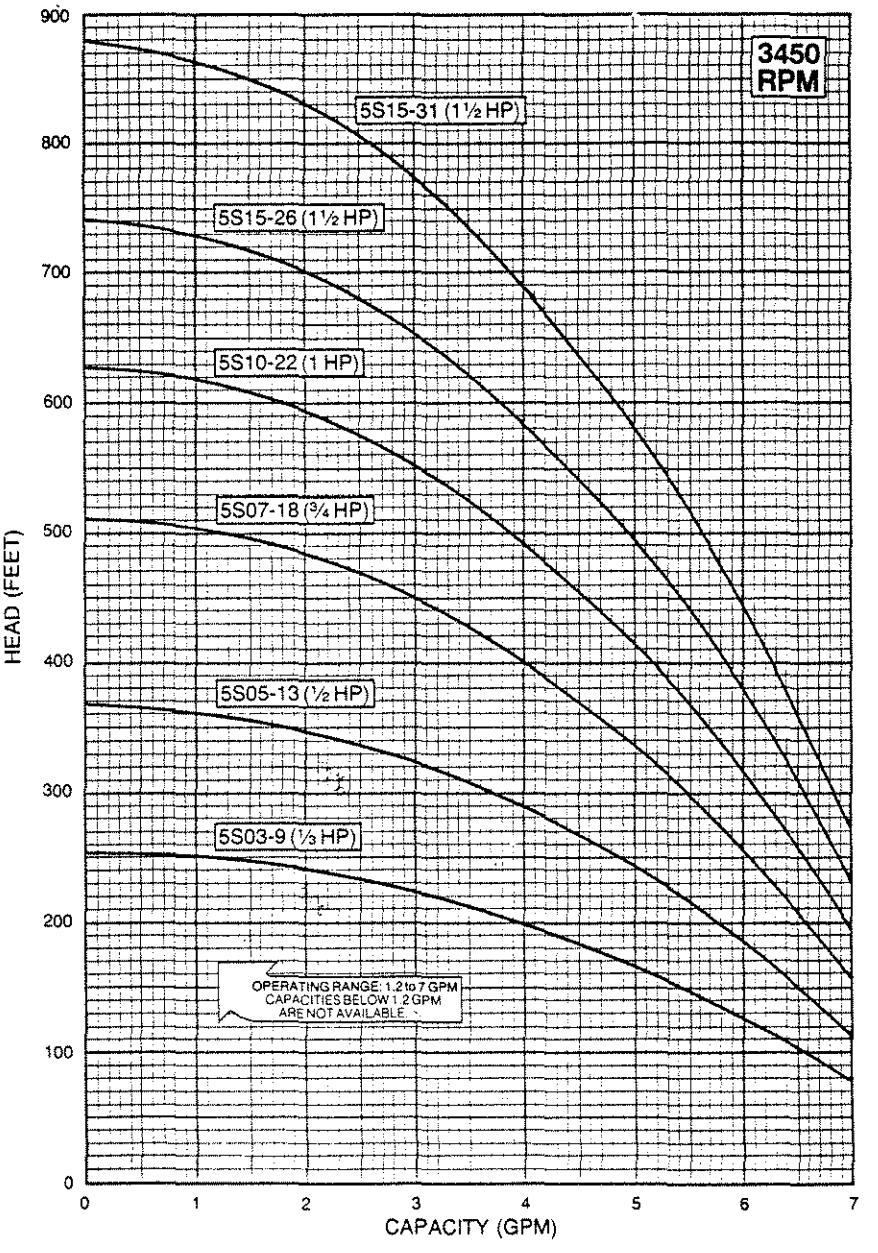

DIMENSIONS AND WEIGHTS

MODEL NO.	HP	LENGTH (INCHES)	WIDTH (INCHES)	APPROX. UNIT SHIPPING WT. (LBS.)
5S03-9	⅓	24 ⅜	3 ¾	27
5S05-13	½	28 ½	3 ¾	31
5S07-18	¾	33 ¼	3 ¾	34
5S10-22	1	37 ⅛	3 ¾	42
5S15-26	1 ½	42	3 ¾	46
5S15-31	1 ½	47 ⅞	3 ¾	58

Specifications are subject to change without notice.

GRUNDFOS 5 GPM MODEL 5S

SELECTION CHARTS
(Ratings are in GALLONS PER HOUR – GPH)

FLOW RANGE
1.2 to 7 GPM

PUMP OUTLET
1" NPT

PUMP MODEL	HP	PSI	DEPTH TO PUMPING WATER LEVEL (LIFT) IN FEET																								
			20	40	60	80	100	120	140	160	180	200	220	240	260	280	300	340	400	460	520	600	700	800	900	1000	1100
5S03-9	1/3	0				428	401	374	347	320	288	256	191	127													
		20		420	393	366	339	312	277	242	169	95															
		30		389	362	335	306	276	225	174	87																
		40	400	358	330	303	265	228	143																		
		50	369	327	296	265	208	150	75																		
		60	337	294	253	211	114																				
Shut-off PSI:			102	94	85	76	68	59	50	42	33	24	16	7													
5S05-13	1/2	0						423	405	386	367	349	330	311	289	267	233	137									
		20			437	418	399	380	362	343	324	305	282	259	222	185	117										
		30		434	415	396	377	359	340	322	301	281	251	222	170	117											
		40	431	412	393	375	356	338	318	299	275	250	210	170	94												
		50	409	390	372	353	335	316	295	273	242	210	153	95													
		60	388	369	350	332	312	293	267	241	197	153	76														
Shut-off PSI:			152	143	134	126	117	108	100	91	82	74	65	56	48	39	30	13									
5S07-18	3/4	0								427	413	400	386	373	360	346	333	305	254	163							
		20						423	409	396	382	369	355	342	329	315	300	267	193								
		30					421	407	394	380	367	353	340	327	313	299	282	242	149								
		40			432	419	405	392	378	365	351	338	325	311	296	281	261	212	92								
		50		430	417	403	390	376	363	349	336	323	308	294	277	259	235	173									
		60	428	415	401	388	374	361	347	334	320	307	291	275	255	234	203	123									
Shut-off PSI:			213	204	195	187	178	169	161	152	143	135	126	117	109	100	91	74	48	22							
5S10-22	1	0										426	415	404	393	382	371	349	316	279	228	103					
		20								423	412	401	390	379	368	357	346	324	289	241	167						
		30							421	410	399	388	377	366	355	344	334	311	273	216	126						
		40						420	409	398	387	376	365	354	343	332	321	297	255	186	75						
		50				429	418	407	396	385	374	363	352	341	330	319	307	282	233	149							
		60			427	416	405	394	383	372	361	350	340	329	317	306	293	265	207	103							
Shut-off PSI:					245	237	228	219	211	202	194	185	176	168	159	150	142	124	98	72	46	12					
5S15-26	1 1/2	0												427	418	408	399	381	353	325	296	245	126				
		20										424	415	406	396	387	378	359	332	303	269	202					
		30									423	414	404	395	386	376	367	349	321	290	253	175					
		40								422	412	403	394	384	375	366	357	338	310	277	235	142					
		50							420	411	401	392	383	374	364	355	346	327	298	262	214	102					
		60						419	409	400	391	381	372	363	354	345	335	317	286	245	188						
Shut-off PSI:								269	260	252	243	234	226	217	208	200	191	174	148	122	96	61	18				
5S15-31	1 1/2	0														425	417	401	378	355	331	299	246	158			
		20												423	415	407	399	383	360	337	313	277	212	94			
		30											421	413	406	398	390	374	351	328	303	265	191	53			
		40										420	413	405	397	389	381	365	342	318	293	252	166				
		50								427	419	411	403	395	388	380	372	357	333	309	283	237	138				
		60							426	418	410	402	395	387	379	371	363	348	324	300	271	219	104				
Shut-off PSI:									320	311	303	294	285	277	268	259	251	233	207	181	155	121	77	34			

Appendix E
Public Notice

April 26, 1996

CERTIFIED MAIL RECEIPT NUMBER P 019 852 612
RETURN RECEIPT REQUESTED

Mr. George Bond
Director
Buncombe County Health Department
35 Woodfin Street
Asheville, NC 28801

Subject: Notice Concerning the Request for Approval of a Corrective Action Plan Based on Natural Attenuation of Groundwater at the Girmes Site, Formerly SKF USA Inc.

Dear Mr. Westbrook:

Pursuant to Title 15A North Carolina Administrative Code Subchapter 2L Paragraph .0114 (b), RMT, Inc. ("RMT") on behalf of SKF USA Inc. ("SKF") is providing this notice for a request for natural attenuation of contaminated property pursuant to Title 15A North Carolina Administrative Code Subchapter 2L, Paragraph .0106 (l). The property is located at 12 Old Charlotte Highway, Asheville, North Carolina.

The nature of the request is to allow natural biodegradation of trichloroethane, 1,2-dichloroethane and vinyl chloride on the North East side of the facility on the property. These chlorinated organic compounds have been found in concentrations in excess of North Carolina Groundwater Quality Standards. The major points of the request are as follows:

- An area in the North East part of the subject property is proposed for natural attenuation.
- In the area proposed for natural attenuation, groundwater flows at an average rate of 135 feet per year.
- The nearest property line in the area proposed for natural attenuation is the Girmes - NC DOT property line.
- Naturally occurring microorganisms in the soil at the facility were evaluated using field and laboratory methods.
- The evidence of viable microorganisms in the subsurface indicate the absence of toxic effects that would normally be caused by chlorinated organic compounds.
- Field and laboratory data indicate that microorganisms capable of degrading chlorinated organic compounds comprise a significant portion of the total microbial population as deduced from field and laboratory data collected from the area proposed for natural attenuation.
- During the period of natural attenuation, monitoring wells will be utilized to monitor groundwater quality at the perimeter of the area where the chlorinated organic compounds have been found in excess of the standards.

RMT, INC.

RMT, INC. — GREENVILLE, SC
100 VERDAE BOULEVARD • 29607-3825
P.O. BOX 16778 • 29606-6778
803/281-0030 • 803/281-0288 FAX

- Any written comments concerning this request should be submitted within 30 days of April 30, 1996, to Kay Dechant of the Asheville Regional Office who has this proposed Corrective Action Plan with detailed site information on record for public perusal. You may make copies of the information obtained at a charge of 10 cents per page. Please send written comments and requests to examine this proposed Corrective Action Plan to the following address:

  DEHNR - Division of Environmental Management
  Groundwater Section
  50 Woodfin Place
  Asheville, North Carolina 28801

Asheville Regional Office staff may be contacted during normal weekday business hours to answer questions pertaining to this request. Notification of this request for Corrective Action is also being made by certified mail to Mr. Paul Flay, the Girmes Site property owner, Mr. Danny Tolar, the Manager of the North Carolina Department of Transportation property that is adjacent to the Girmes Site, and Mr. James Westbrook, Jr., the Asheville City Manager.

Sincerely,

RMT, Inc.

Robert P. Stevens

Robert P. Stevens, P.E.
Project Manager

cc: File 70144.05

P 019 852 612

Receipt for Certified Mail

No Insurance Coverage Provided
Do not use for International Mail
(See Reverse)

UNITED STATES POSTAL SERVICE

Sent to Mr. George Bond	
Street and No. Buncombe Health Dept. 35 Woodfin Street	
P.O., State and ZIP Code Asheville NC 28801	
Postage	$
Certified Fee	
Special Delivery Fee	
Restricted Delivery Fee	
Return Receipt Showing to Whom & Date Delivered	
Return Receipt Showing to Whom, Date, and Addressee's Address	
TOTAL Postage & Fees	$
Postmark or Date	

PS Form 3800, June 1991

Fold at line over top of envelope to the right of the return address

CERTIFIED

P 019 852 612

MAIL

April 26, 1996

CERTIFIED MAIL RECEIPT NUMBER P 019 852 570
RETURN RECEIPT REQUESTED

Mr. Paul Flay
Asheville Property Administration & Leasing
c/o J. L. de Ball Girmes Canada, Inc.
35 Little Ball Industrial
Granby, Quebec, J251A5
Canada

Subject: Notice Concerning the Request for Approval of a Corrective Action Plan Based on Natural Attenuation of Groundwater at the Girmes Site, Formerly SKF USA Inc.

Dear Mr. Flay:

Pursuant to Title 15A North Carolina Administrative Code Subchapter 2L Paragraph .0114 (b), RMT, Inc. ("RMT") on behalf of SKF USA Inc. ("SKF") is providing this notice for a request for natural attenuation of contaminated property pursuant to Title 15A North Carolina Administrative Code Subchapter 2L, Paragraph .0106 (l). The property is located at 12 Old Charlotte Highway, Asheville, North Carolina.

The nature of the request is to allow natural biodegradation of trichloroethane, 1,2-dichloroethane and vinyl chloride on the North East side of the facility on the property. These chlorinated organic compounds have been found in concentrations in excess of North Carolina Groundwater Quality Standards. The major points of the request are as follows:

- An area in the North East part of the subject property is proposed for natural attenuation.
- In the area proposed for natural attenuation, groundwater flows at an average rate of 135 feet per year.
- The nearest property line in the area proposed for natural attenuation is the Girmes - NC DOT property line.
- Naturally occurring microorganisms in the soil at the facility were evaluated using field and laboratory methods.
- The evidence of viable microorganisms in the subsurface indicate the absence of toxic effects that would normally be caused by chlorinated organic compounds.
- Field and laboratory data indicate that microorganisms capable of degrading chlorinated organic compounds comprise a significant portion of the total microbial population as deduced from field and laboratory data collected from the area proposed for natural attenuation.
- During the period of natural attenuation, monitoring wells will be utilized to monitor groundwater quality at the perimeter of the area where the chlorinated organic compounds have been found in excess of the standards.

RMT, INC.

RMT, INC. — GREENVILLE, SC
100 VERDAE BOULEVARD - 29607-3825
P.O. BOX 16778 - 29606-6778
803/281-0030 - 803/281-0288 FAX

- Any written comments concerning this request should be submitted within 30 days of April 30, 1996, to Kay Dechant of the Asheville Regional Office who has this proposed Corrective Action Plan with detailed site information on record for public perusal. You may make copies of the information obtained at a charge of 10 cents per page. Please send written comments and requests to examine this proposed Corrective Action Plan to the following address:

  DEHNR - Division of Environmental Management
  Groundwater Section
  50 Woodfin Place
  Asheville, North Carolina 28801

Asheville Regional Office staff may be contacted during normal weekday business hours to answer questions pertaining to this request. Notification of this request for Corrective Action is also being made by certified mail to Mr. George Bond, Director of the Buncombe County Health Department, Mr. James Westbrook, Jr., the Asheville City Manager, and Mr. Danny Tolar, the Manager of the North Carolina Department of Transportation property that is adjacent to the Girmes Site.

Sincerely,

RMT, Inc.

Robert P. Stevens

Robert P. Stevens, P.E.
Project Manager

cc: File 70144.05

P 019 852 570

Receipt for Certified Mail

No Insurance Coverage Provided
Do not use for International Mail
(See Reverse)

UNITED STATES POSTAL SERVICE

Sent to Mr. Paul Flay	
Street and No. 35 Little Ball Industrial	
P.O., State and ZIP Code Granby, Quebec, J2S1A5 CANADA	
Postage	$
Certified Fee	
Special Delivery Fee	
Restricted Delivery Fee	
Return Receipt Showing to Whom & Date Delivered	
Return Receipt Showing to Whom, Date, and Addressee's Address	
TOTAL Postage & Fees	$
Postmark or Date	

PS Form 3800, June 1991

Fold at line over top of envelope to the right of the return address

CERTIFIED

P 019 852 570

MAIL

April 26, 1996

CERTIFIED MAIL RECEIPT NUMBER P 019 852 569
RETURN RECEIPT REQUESTED

Mr. James Westbrook, Jr.
City Manager
70 City County Plaza
Asheville, North Carolina 28802

Subject: Notice Concerning the Request for Approval of a Corrective Action Plan Based on Natural Attenuation of Groundwater at the Girmes Site, Formerly SKF USA Inc.

Dear Mr. Westbrook:

Pursuant to Title 15A North Carolina Administrative Code Subchapter 2L Paragraph .0114 (b), RMT, Inc. ("RMT") on behalf of SKF USA Inc. ("SKF") is providing this notice for a request for natural attenuation of contaminated property pursuant to Title 15A North Carolina Administrative Code Subchapter 2L, Paragraph .0106 (l). The property is located at 12 Old Charlotte Highway, Asheville, North Carolina.

The nature of the request is to allow natural biodegradation of trichloroethane, 1,2-dichloroethane and vinyl chloride on the North East side of the facility on the property. These chlorinated organic compounds have been found in concentrations in excess of North Carolina Groundwater Quality Standards. The major points of the request are as follows:

- An area in the North East part of the subject property is proposed for natural attenuation.
- In the area proposed for natural attenuation, groundwater flows at an average rate of 135 feet per year.
- The nearest property line in the area proposed for natural attenuation is the Girmes - NC DOT property line.
- Naturally occurring microorganisms in the soil at the facility were evaluated using field and laboratory methods.
- The evidence of viable microorganisms in the subsurface indicate the absence of toxic effects that would normally be caused by chlorinated organic compounds.
- Field and laboratory data indicate that microorganisms capable of degrading chlorinated organic compounds comprise a significant portion of the total microbial population as deduced from field and laboratory data collected from the area proposed for natural attenuation.
- During the period of natural attenuation, monitoring wells will be utilized to monitor groundwater quality at the perimeter of the area where the chlorinated organic compounds have been found in excess of the standards.

RMT, INC.

RMT, INC. — GREENVILLE, SC
100 VERDAE BOULEVARD - 29607-3825
P.O. BOX 16778 - 29606-6778
803/281-0030 - 803/281-0288 FAX

- Any written comments concerning this request should be submitted within 30 days of April 30, 1996, to Kay Dechant of the Asheville Regional Office who has this proposed Corrective Action Plan with detailed site information on record for public perusal. You may make copies of the information obtained at a charge of 10 cents per page. Please send written comments and requests to examine this proposed Corrective Action Plan to the following address:

  DEHNR - Division of Environmental Management
  Groundwater Section
  50 Woodfin Place
  Asheville, North Carolina 28801

Asheville Regional Office staff may be contacted during normal weekday business hours to answer questions pertaining to this request. Notification of this request for Corrective Action is also being made by certified mail to Mr. George Bond, Director of the Buncombe County Health Department, Mr. Paul Flay, the Girmes Site property owner, and Mr. Danny Tolar, the Manager of the North Carolina Department of Transportation property that is adjacent to the Girmes Site.

Sincerely,

RMT, Inc.

Robert P. Stevens

Robert P. Stevens, P.E.
Project Manager

cc: File 70144.05

P 019 852 569

UNITED STATES POSTAL SERVICE

Receipt for Certified Mail

No Insurance Coverage Provided
Do not use for International Mail
(See Reverse)

Sent to Mr. James Westbrook, Jr.	
Street and No. 70 City County Plaza	
P.O., State and ZIP Code Asheville, NC 28802	
Postage	$
Certified Fee	
Special Delivery Fee	
Restricted Delivery Fee	
Return Receipt Showing to Whom & Date Delivered	
Return Receipt Showing to Whom, Date, and Addressee's Address	
TOTAL Postage & Fees	$
Postmark or Date	

PS Form 3800, June 1991

Fold at line over top of envelope to the right of the return address

CERTIFIED

P 019 852 569

MAIL

April 26, 1996

CERTIFIED MAIL RECEIPT NUMBER P 019 852 593
RETURN RECEIPT REQUESTED

Mr. Danny Tolar
NC DOT
P. O. Box 3279
Asheville, NC 28802

Subject: Notice Concerning the Request for Approval of a Corrective Action Plan Based on Natural Attenuation of Groundwater at the Girmes Site, Formerly SKF USA Inc.

Dear Mr. Tolar:

Pursuant to Title 15A North Carolina Administrative Code Subchapter 2L Paragraph .0114 (b), RMT, Inc. ("RMT") on behalf of SKF USA Inc. ("SKF") is providing this notice for a request for natural attenuation of contaminated property pursuant to Title 15A North Carolina Administrative Code Subchapter 2L, Paragraph .0106 (l). The property is located at 12 Old Charlotte Highway, Asheville, North Carolina.

The nature of the request is to allow natural biodegradation of trichloroethane, 1,2-dichloroethane and vinyl chloride on the North East side of the facility on the property. These chlorinated organic compounds have been found in concentrations in excess of North Carolina Groundwater Quality Standards. The major points of the request are as follows:

- An area in the North East part of the subject property is proposed for natural attenuation.
- In the area proposed for natural attenuation, groundwater flows at an average rate of 135 feet per year.
- The nearest property line in the area proposed for natural attenuation is the Girmes - NC DOT property line.
- Naturally occurring microorganisms in the soil at the facility were evaluated using field and laboratory methods.
- The evidence of viable microorganisms in the subsurface indicate the absence of toxic effects that would normally be caused by chlorinated organic compounds.
- Field and laboratory data indicate that microorganisms capable of degrading chlorinated organic compounds comprise a significant portion of the total microbial population as deduced from field and laboratory data collected from the area proposed for natural attenuation.
- During the period of natural attenuation, monitoring wells will be utilized to monitor groundwater quality at the perimeter of the area where the chlorinated organic compounds have been found in excess of the standards.

RMT, INC.

RMT, INC. — GREENVILLE, SC
100 VERDAE BOULEVARD - 29607-3825
P.O. BOX 16778 - 29606-6778
803/281-0030 - 803/281-0288 FAX

- Any written comments concerning this request should be submitted within 30 days of April 30, 1996, to Kay Dechant of the Asheville Regional Office who has this proposed Corrective Action Plan with detailed site information on record for public perusal. You may make copies of the information obtained at a charge of 10 cents per page. Please send written comments and requests to examine this proposed Corrective Action Plan to the following address:

  DEHNR - Division of Environmental Management
  Groundwater Section
  50 Woodfin Place
  Asheville, North Carolina 28801

Asheville Regional Office staff may be contacted during normal weekday business hours to answer questions pertaining to this request. Notification of this request for Corrective Action is also being made by certified mail to Mr. George Bond, Director of the Buncombe County Health Department, Mr. James Westbrook, Jr., the Asheville City Manager, and Mr. Paul Flay, the Girmes Site property owner.

Sincerely,

RMT, Inc.

Robert P. Stevens

Robert P. Stevens, P.E.
Project Manager

cc: File 70144.05

P 019 852 593

Receipt for Certified Mail

No Insurance Coverage Provided
Do not use for International Mail
(See Reverse)

UNITED STATES POSTAL SERVICE

Sent to Mr. Danny Tolar	
Street and No. NC DOT	
P.O., State and ZIP Code PO Box 3279, Asheville, NC 28802	
Postage	$
Certified Fee	
Special Delivery Fee	
Restricted Delivery Fee	
Return Receipt Showing to Whom & Date Delivered	
Return Receipt Showing to Whom, Date, and Addressee's Address	
TOTAL Postage & Fees	$
Postmark or Date	

PS Form 3800, June 1991

Fold at line over top of envelope to the right of the return address

CERTIFIED

P 019 852 593

MAIL

Outline Code	Description
1	**SITE CAP APPROVAL**
2	**REMEDIAL DESIGN**
2.1	BASIS OF DESIGN
2.2	WELL DESIGN
2.3	PIPING LAYOUT & SITE PLAN
2.4	ELECTRICAL & INSTRUMENTATION
2.5	PROCESS DESIGN
2.6	STRUCTURAL DESIGN
2.7	NPDES PERMITTING
2.8	REMEDIAL DESIGN REPORT
2.9	SUBMIT DESIGN REPORT
3	**SUBCONTRACTOR SELECTION**
3.1	BIDDING DOCUMENT DEVELOPMENT
3.2	ISSUE FOR BIDS
3.3	BIDDING CYCLE
3.4	BIDS DUE
3.5	NEGOTIATE & AWARD CONTRACT
3.6	NOTICE TO PROCEED
4	**INITIAL SITE WORK**
4.1	MOBILIZATION
4.2	CLEARING & GRADING
4.3	INSTALL RECOVERY WELLS
5	**EQUIPMENT PROCUREMENT**
5.1	AIR STRIPPER
5.2	PUMPS
5.3	MISC. EQUIPMENT & TANK
5.4	INSTRUMENTATION & CONTROLS
6	**REMEDIAL ACTION CONSTRUCTION**
6.1	MOBILIZATION
6.2	EQUIPMENT FOUNDATIONS
6.3	TRENCHING & PIPING
6.4	VALVE VAULT INSTALLATION
6.5	EQUIPMENT INSTALLATION
6.6	PREFINAL INSPECTION
6.7	PUNCH-LIST PERIOD
6.8	FINAL INSPECTION
6.9	SITE RESTORATION
7	**SYSTEM START-UP**

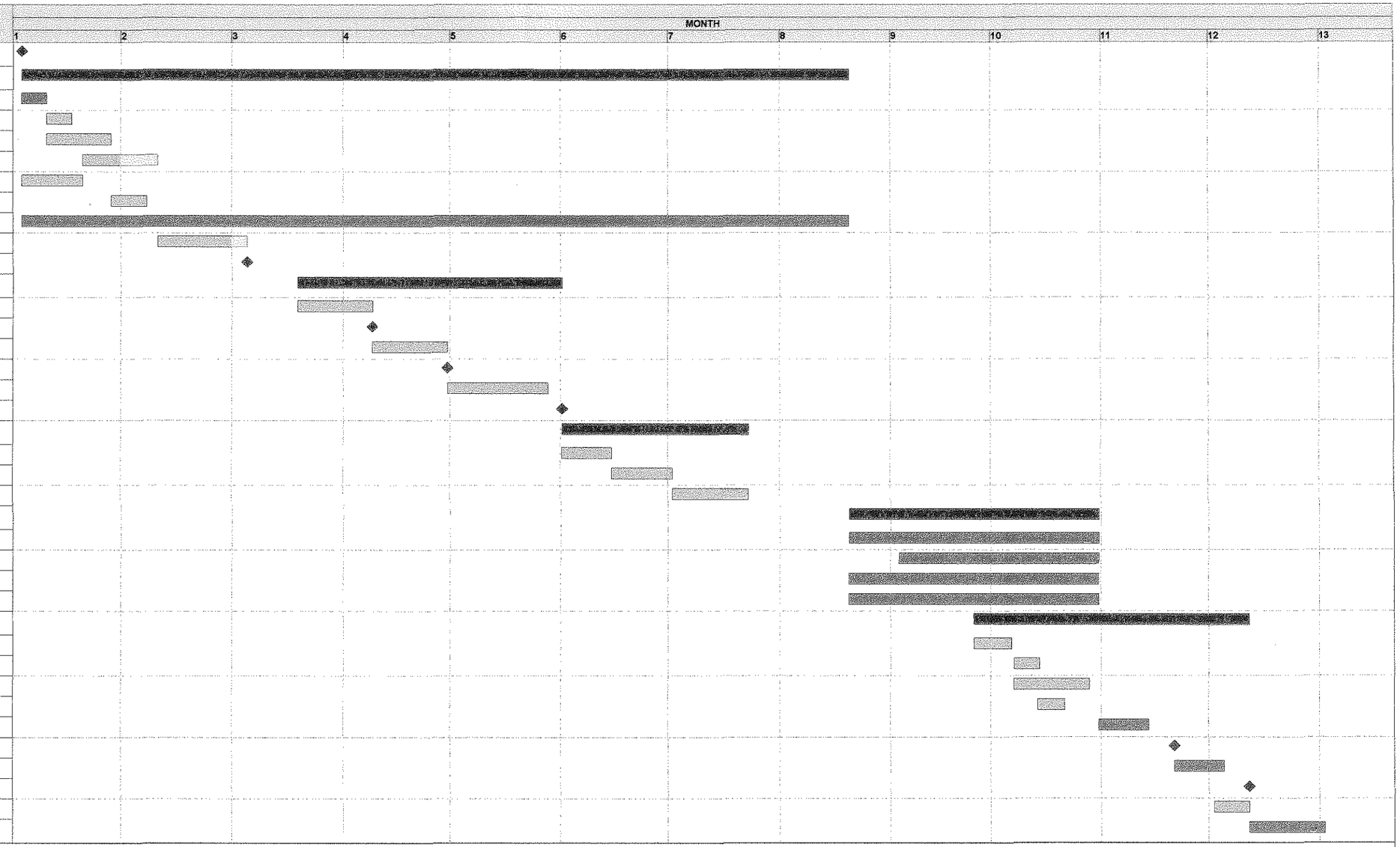

Project name 7014405
Page number 1A
© Primavera Systems, Inc.

Early bar
Critical bar
Summary bar
Finish milestone point

REMEDIAL ACTION DESIGN & CONSTRUCTION SCHEDULE
SKF, USA INC.

PLATE 10