ENVIRONMENTAL ASSESSMENT
J.L. de BALL-
GIRMES OF AMERICA, INC.
ASHEVILLE, N.C. PLANT

Prepared for:
J.L. de Ball-Girmes of America

March 4, 1992

Prepared by:
Bain, Palmer & Assoc., Inc.
2641-G Randleman Road
Greensboro, NC 27406
(919) 272-9713

March 4, 1992

J.L. deBall-Girmes of America, Inc.
U.S. Hwy 74E
Asheville, N.C. 28815

Attention: Mr. Paul Flay

Subject: Environmental Assessment
J.L. de Ball - Girmes of America
Asheville, N.C. Plant

Dear Mr. Flay:

Bain, Palmer and Associates, Inc. (BPA) is pleased to submit this Environmental Site Assessment (ESA) conducted at the Asheville, North Carolina Plant. The enclosed report outlines our methods of investigation, the scope of our work, cleanup tasks completed under our supervision and finally, our opinion of the plant's current environmental compliance.

It has been a pleasure to work with you and your staff and we look forward to providing additional services to you should the occasion arise.

Should you have any questions or desire additional information, please do not hesitate to contact us.

Very truly yours,
BAIN, PALMER AND ASSOCIATES, INC.

A. Barry Nelson, P.G.
Vice President
Senior Hydrogeologist

CERTIFICATION

I HEREBY CERTIFY THIS 4th DAY OF MARCH, 1992 THAT THIS REPORT WAS PREPARED BY ME OR UNDER MY DIRECT SUPERVISION.

BY _____
A. BARRY NELSON, P.G.
VICE-PRESIDENT
SENIOR HYDROLOGIST

NORTH CAROLINA
LICENSED
SEAL
165
GEOLOGIST
ALAN BARRY NELSON

BY _____
JOHN M. STEWART, P.G.
PROJECT GEOLOGIST

REVIEWED BY _____
R. EDWARD HEDGECOCK, P.E., P.G.
PRINCIPAL ENGINEER

TABLE OF CONTENTS

PURPOSE AND SCOPE 1

SITE LOCATION AND DESCRIPTION 2
- Plant Site 2
- Buildings 2

ENVIRONMENTAL ASSESSMENT 3
- Surrounding Land Use 3
- Historical Land Use 3
- Site Reconnaissance 4

NATURAL HAZARDS 4
- Geologic Framework 5
  - Geology 5
  - Structural Geology 5
  - Hydrology 6
- Flood Hazard 7
- Seismicity 7
- Landslides 7
- Radon 7

INDUCED ENVIRONMENTAL HAZARDS 8
- Chemical Storage 8
- Air Quality 9
- Water Quality 10
- Hazardous Waste Management 10
- Wastewater Treatment Plant 10
- Underground Storage Tanks 11
- Above Ground Storage Tanks 13
- Demolition Material 13
  - Baseball Field 13
  - Slope Debris Area 14
- Drainage Area 15
- Asbestos 16
- PCB's 17

REMEDIAL ACTIVITIES RELATED TO CLOSING 17

CONCLUSIONS AND RECOMMENDATIONS 17

QUALIFICATIONS 19

FIGURES

Figure 1	Site Location Map
Figure 2	Topographic Map
Figure 3	Geologic Map
Figure 4	Piedmont Groundwater System
Figure 5	Sample Locations
Figure 6	Seismicity Map
Figure 7	Radon Occurrence Map

PHOTOGRAPHS

- Site Photos
- Wastewater Treatment Plant Photos
- Baseball Field Debris Before Remediation
- Hillside Debris Prior to Removal
- Bank Remediation Photos
- Bank Area After Debris Removal

PLATES

Plate 1	Environmental Geology Map and Site/Plant Features

APPENDICES

Appendix A	Laboratory Reports
Appendix B	Newspaper Article
Appendix C	Tank Tightness Test Results

PURPOSE AND SCOPE

An Environmental Site Assessment is designed to provide basic knowledge of a site and its surrounding land uses in order to determine if any environmental hazards are present and to determine if remedial measures are required. This evaluation is completed to alert a potential buyer and the seller of site conditions that may be impacted by current environmental laws and regulations.

Our assessment included a walkover and inspection by a team of experienced environmental scientists/engineers to inspect the property for indicators of possible environmental hazards including transformers, distressed vegetation, on-site chemical and/or drum storage, above and underground tanks, pollution control equipment and any other man-induced environmental hazards. Samples of soil were collected and analyzed at various areas of concern, underground tanks were tested, an abandon water well was sampled and tested, and contaminated soils were removed from the site. Additionally, the potential for natural hazards such as flooding, landslides, and seismicity were evaluated.

A review of the site and surrounding area's historical land use was made through the evaluation of property deeds, historical aerial photographs, and any land use maps of the area. Additionally, available permits for solid waste disposal, hazardous waste activity, demolition debris disposal, air quality permits and other waste/emission permits or occurrences were identified. This data was compiled through a review of documents available from the North Carolina Department of Environment, Health and Natural Resources, Buncombe County, the City of Asheville, the United States Environmental Protection Agency plus other local governmental bodies and health departments which regulate environmental hazards.

SITE LOCATION AND DESCRIPTION

Plant Site

The Girmes plant contains approximately 40 acres in an irregularly shaped parcel lying on the east side of Old U.S. Highway 74 in Asheville, Buncombe County, North Carolina. The property is bordered by Old U.S. Highway 74 to the west, Gashes Creek Road to the east and the Southern Railroad to the south. The property has 110 feet of frontage along Old U.S. 74, 713.5 feet along Gashes Creek Road and 1163.75 feet along the Southern Railroad. Access is obtained via a paved driveway off Old U.S. 74. Figure 1 is a location map of the facility. Plate 1 taken from a current aerial photograph, identifies environmental features on the site which we have investigated or noted during our investigation.

The plant sits atop a prominent hill that is nearly flat along the top with steep side slopes and moderately steep access roads. Gashes Creek flows through the property from south to north forming a portion of the western boundary. The mid section of the site is traversed by a 50 foot power line easement. A Department of Transportation Maintenance Facility is located at the toe of the side slope of the facility along the northern boundary. Figure 2 is a topographic map of the site area.

Buildings

According to a property appraisal of the site conducted in 1989 by David Moore and Associates, the following data describes the physical plant.

- Brick and Metal Manufacturing Building comprising 161,774 sq. ft. originally constructed in 1961 with additions in 1981 and 1985
- 91,000 sq. ft. of asphalt paving
- Wastewater pretreatment plant
- 400,000 gal. water storage tank
- 2- 30,000 gal. underground storage tanks
- 40,000 gal. warm water tank

- 20,000 gal. propane tank
- Oil pump house
- Air pollution equipment
- 4 abandoned water supply wells

ENVIRONMENTAL ASSESSMENT

Surrounding Land Use

The Girmes facility is located in the south central portion of the city of Asheville, North Carolina, approximately one mile northwest of Interstate 40.

The area within a one mile radius of the plant is characterized by mixed residential and light commercial development. The site is zoned LI for light industrial and is a conforming use with no zoning change likely. Considerable open space between the residential and commercial facilities provides a buffer zone for the residences.

Historical Land Use

A review of aerial photos from Buncombe County indicate that the plant site was undeveloped prior to 1961.

A deed search was completed to track property ownership. The property was purchased by Nauyaug, Inc. from Air Control Products on February 14, 1961 (Deed Book 840 Page 453). Girmes purchased the property from Nauyaug, Inc. and Harold W. Reeves and wife, et. al. on May 4, 1973 (Deed Book 1081 Page 1).

During the deed search, no notices of hazardous waste disposal were found. The Resource Conservation and Recovery Act requires that hazardous waste disposal occurring after 1981 be identified on property deeds. Any disposal prior to that date is not identifiable by this means.

Site Reconnaissance

A plant tour and inspection were completed by Barry Nelson and John Stewart of BPA on April 29, 1991. Mr. Clement Rigsby of Girmes led the tour and described the plant operations. During this inspection, Mr. Rigsby and Mr. Paul Flay, also of Girmes, provided various documents concerning environmental permits, appraisal reports and other information concerning the plant.

In general, the plant shows evidence of typical dying and finishing manufacturing. All equipment has been removed from the facility since production began to decline in October of 1990. Most dye production ceased in January, 1991. The pollution control equipment has been cleaned and wastes removed from the plant.

Our inspection did not include a structural engineering investigation. Therefore, the physical condition of the plant facilities other than those described further in detail in this report have not been determined by BPA. A Real Estate Appraisal of the plant and its facilities was completed in July 1989 by David Moore and Associates which outlines the physical condition of the plant.

Specific discussions of the remediation activities associated with the plant shut down and other areas of environmental concern follow below in the section on **Induced Environmental Hazards.**

NATURAL HAZARDS

Natural hazards which may affect a site include flooding potential, seismicity, local topography and subsurface geology. These factors are all controlled by the geologic setting of the site. Therefore, a brief discussion of the regional/local geology and the hydrogeologic framework precedes the natural hazards investigation summary.

Geologic Framework

Geology

The Asheville area lies in the Blue Ridge province of the Appalachian Highlands. The Asheville plateau, an area of relatively moderate relief of about 2,200 feet is surrounded by a much more mountainous range with elevations exceeding 6,400 feet in the Buncombe County area.

The Appalachian mountains have undergone various periods of orogeny (mountain building) and erosion to produce a complex system of folded, faulted and uplifted rocks comprised principally of gneiss and schist, some granitic and basic intrusives plus minor occurrences of dolomite, quartzite, sandstone and conglomerate. The rocks range in age from preCambrian to Devonian and principally belong to the Ocoee Supergroup. Figure 3 is a generalized geologic map of the Asheville Area.

Deeply weathered saprolites underlie the hills. Local bedrock outcrops occur throughout the area. The saprolite is a clay rich product of the inplace weathering of the parent rock material.

Structural Geology

Most of the major mountain ranges in the Appalachian Highlands exhibit a pronounced northeast-southwest alignment that roughly corresponds to regional strike.

The Brevard zone is a pronounced northeast trending topographic scarp which may be interpreted as a fault scarp where the Brevard Schist is in contact with other country rocks. In eastern Buncombe county, the evidence for faulting is not as strong as the scarp diverges from the schist.

Isoclinal folds, foliation planes and fracturing are the result of the complex deformational history of the Appalachian range. However, no major structural geologic features were mappable within the plant site area.

Hydrology

The site drains to the Swananoa River and ultimately to the French Broad River. Precipitation in the Asheville area is generally on the order of 38 inches per year, one of the lowest areas of precipitation in the state.

Groundwater occurs in two zones in the Blue Ridge. The upper water table zone lies within the deeply weathered saprolite and forms a regolith aquifer. The permeability of the regolith is controlled by the porosity between the individual grains in the soil matrix. Groundwater also occurs in the fractures in the bedrock below the regolith aquifer. Figure 4 is a conceptualization of the groundwater system in the Blue Ridge. This interpretation is based on the concept that the regolith is a reservoir which stores groundwater while the fractures in the bedrock act as pipelines to transmit the groundwater.

This groundwater system discharges to surface water bodies through springs, streams and seeps. The ultimate point of discharge of groundwater and any pollutants that they may carry is normally a local stream. This results in compartmentalization of pollutants in localized areas without major transfer of groundwater pollutants over large areas.

Due to its topographic position, the plant is underlain by several tens of feet of saprolite. The permeability of this material is such that pollutant movement through the saprolite in the vertical plane would be slow (probably less than 5 feet per year). However, because it sits on a topographic high, any groundwater pollutants emitted at the site could move in almost any direction to areas of lower hydraulic head. Conversely, the activities of surrounding landowners is not likely to adversely affect the groundwater system beneath the plant site.

Flood Hazard

The site lies southwest of the Swananoa River. It is located in Zone C of the Federal Emergency Management Agency's Flood Boundary Map which corresponds to areas above the 100 year flood elevation.

Seismicity

The Asheville area lies along the northern edge of the South Carolina-Georgia Seismic Zone. Modified Mercalli intensities of IV have been recorded in the Asheville Area. Damage associated with these intensities is very minor, and usually results in only windows, dishes, and doors rattling. While it is beyond the scope of this report to predict earthquake activity, historical activity is a good indicator that future earthquake activity is likely at relatively low intensities. Figure 6 is a seismicity map of the area.

Landslides

Due to the steep slopes and planes of weakness along adversely oriented bedding, fractures, or joints, landslides are common in the Asheville area. No specific landslide hazards were observed at the plant or its environs. However, the steep slopes along some property boundaries cannot be eliminated from potential landslide activity.

Radon

Radon is a colorless, odorless gas emitted from the natural decay of radioactive elements in the earth's crust. The gas tends to collect in some structures that are tightly insulated, have no crawl spaces or contain basements. Figure 7 shows the relative radon hazard for the United States. While the Asheville area lies within a zone of potential hazard, inspection of the plant indicates that due to its ventilation system, radon collection in the building is unlikely. Therefore, no radon tests were completed.

INDUCED ENVIRONMENTAL HAZARDS

Chemical Storage

Most on-site chemical storage related to the dying and manufacturing process was, according to plant personnel, restricted to the drug room. Various, dyes, pigments, finishes etc. were utilized in the textile process. Staining and pitting of the floor and floor drains was observed during the inspection. The concrete floor appears to be intact; however, the floor drains and sumps were dry at the time of inspection, thus their exact integrity has not been verified. On the day of the inspection, the following chemicals were found stored on-site.

- Various salts and brines were associated with the wastewater treatment plant. These were stored in above ground tanks and consisted of Chromium, Zinc, and Copper in solutions of less than 1%.

- Halon was used for dry chemical fire protection. Because of Halon's destructive effect on the Earth's ozone layer, an alternate form of fire fighting gas should be considered in the future.

- Caustic soda was stored in 55 gallon drums. Two drums were still in the plant at the time of the inspection.

- Two 500 gallon latex tanks were still in place during the inspection. This is not a hazardous or toxic substance.

- A small parts degreasing sink was used in the maintenance shop.

- Five waste oil drums were observed outside the oil house, and numerous drums of oil and grease were stored in the oil house.

- A diesel fuel tank is still in place in the building.

- Small quantities of the following chemicals were found in the building:

  Oxalic Acid
  Whiteners
  PreChem NFE
  Sodium Hydrosulfate
  Sodium Chloride

There was no evidence of gross chemical spills or releases. The plant has not reported any spills to any regulatory agency during its occupancy of the property.

Air Quality

The Asheville area is in an area of non-attainment as defined by the United States Environmental Protection Agency. This is due to particulates associated with the vegetation of the mountain area. Fairly strict air pollution standards are therefore enforced.

The Girmes plant had five air quality permits with the Buncome County Western North Carolina Regional Air Pollution Control Agency, which covered the following air pollution control equipment:

Boiler	#20321
Oil Boiler	#20230
Tenter Frame	#20287
Tenter Frame	#20393
Tenter Frame	#20399

The Western Regional Office of the Division of Environmental Management and the Western Regional Air Pollution Control Agency do not have records of any air quality violations by Girmes.

The first property owner, Air Products (SKF) produced ball bearings at the facility from 1961 to 1973. This steel manufacturing facility most likely used baghouses for control of dust

emissions. In some instances, this dust can be a hazardous waste (either listed or characteristic). No records of this equipment or the disposal practices of baghouse dust disposal could be determined. Similar industries commonly dispose of this dust on-site. Our inspection of the site did not detect any baghouse dust. While we found no evidence of bag house dust disposal on-site, we cannot attest to the presence or absence of material in the subsurface other than at the locations of our testing.

Water Quality

Four water supply wells were drilled at the Girmes site several years ago. These wells were reportedly more than 200 feet deep and yielded water in quantities suitable for development. No specific well records of this drilling activity were available. A groundwater sample (GIR-Well1) was obtained from one of these supply wells (Figure 5) and was tested for total organic carbon, total organic halides (TOX), arsenic and chromium, and total petroleum hydrocarbons (TPH). These analyses indicated that no gross groundwater contamination is present beneath the plant in the area of the well. The test data is presented in Appendix A.

Hazardous Waste Management

Girmes is not a generator, storer, treater or disposer of hazardous waste. Review of documents on file with the North Carolina Department of Environment, Health and Natural Resources indicates no hazardous waste activity occurred at the site. The site is not a Superfund site and they have no hazardous waste permits. No hazardous waste activities were observed during the inspection.

Wastewater Treatment Plant

Girmes operated an equalization basin (See Plate 1) that served to defoam the wastewater effluent, control pH and remove lint from the waste stream. The plant then discharged the wastewater through a 10 inch effluent line to the Metropolitan Sewerage District (MSD) of

Buncombe County. This was performed under a pretreatment/discharge permit (#S-055-88 and S-024-88). The plant treated and discharged approximately 340,000 gallons per day to the MSD. No known violations of the permit conditions were found during a review of the operation of the facility with the MSD. The only documented problem with the system which can be linked to the plant was an overflowing manhole within the MSD collection system that resulted in some colored wastewater, presumably from the plant, entering the Swananoa River. This was documented in an undated newspaper article (included in Appendix B) provided to us by Girmes. This overflow was not caused by any violation by the plant and can be attributed to undersized collection lines and treatment capacity within the MSD wastewater treatment system.

Lint from the equalization basin was removed once per month and reportedly transported to the local sanitary landfill for disposal. At the time of our inspection, the basin had been emptied and cleaned. Some residual lint remained in a wooded area near the basin. As part of our work with Girmes, we suggested that this lint be removed. All this material was subsequently removed. One grab sample of soil which was under the lint pile was collected by John Stewart. The approximate location of this sample is shown in Figure 5. This sample (GIRSS-1) was tested for arsenic and chromium by the Toxicity Characteristic Leachate Procedure (TCLP) for determination of hazardous waste characteristics. Arsenic and chromium were selected since they are commonly associated with textile dyes. The soil passed the TCLP test and is not hazardous for arsenic or chromium. Thus, soil contamination resulting from leaching of these two metals from the lint stockpile does not appear to have occurred. The test data is provided in Appendix A.

Underground Storage Tanks

Two 30,000 gallon No. 5 fuel oil underground storage tanks (USTs) are presently located on-site (See Plate 1). These tanks are located at the rear of the site, near the fuel storage/pump house. According to plant personnel, these tanks were installed in 1973 and were leak tested

approximately 2-3 years ago with the tanks testing "tight". No paperwork concerning the testing was available. The tanks are registered with the State as required.

Visible oil stains were observed at the fill ports and in the sump area at the rear of the dike near the pump house. In order to assess the integrity of the tanks and to determine if the releases observed were minor in scale, subsurface testing was completed around the tank area.

Three soil test borings were drilled using hollow stem auger methods. Split spoon samples were obtained in each of the borings at 10 and 15 foot intervals or at a depth equal to the tank bottoms and approximately 5 feet below. A portion of each sample was placed in a zip lock bag and screened for organic vapors using a Foxboro Flame Ionization Detector (FID) Organic Vapor Analyzer. None of the samples produced a positive OVA reading. A split of the samples (GIRTB-1, -2, -3) was placed in the appropriate containers based on SW-846 protocols, labelled, logged on a Chain of Custody Form and placed on ice for shipment to IEA Laboratories of Cary, N.C. for analysis. The samples were tested for oil and grease using SW-846 Method 9071 and total petroleum hydrocarbons by Method 3550.

The laboratory analyses of the test boring samples detected oil and grease levels of 220 ppm (TB-1), 1,100 ppm (TB-2) and 300 ppm(TB-3). Oil and grease levels above 10 ppm or the natural background level for the site exceed the State's present acceptable limits. No TPH compounds were detected using Method 3550. To try and determine whether this contamination was a result of normal usage or leaking tanks, BPA contracted Southern Pump and Tank Company (SPATCO) to perform additional tank tightness tests on the two tanks. The tanks were tested by Gilbarco technicians on August 8 and 9, 1991. The tests indicate that, on the days of the test, the tanks were not leaking above a leak rate of 0.1 gph. The lines from the tanks to the boilers were not tested at this time. The tank tightness results are presented in Appendix C. Based on these results, we believe the oil and grease contamination detected in the borings is probably a result of surface spills which have occurred during the normal daily operation of filling the tanks.

A review of NC DEHNR UST registration data base indicated that a 550 gallon gasoline tank located at the plant was removed on September 1, 1989. The gasoline tank was reportedly removal by SPATCO. A 30,000 gallon quench oil tank which was originally installed at the bearings plant on April 10, 1963 was removed on January 1, 1972. To our knowledge no soil sampling was performed when either of the USTs were removed.

Above Ground Storage Tanks

An above ground propane tank which was located on the grounds (See Plate 1) has been dismantled and sold. No other above ground tanks were visible outside the plant. As indicated above, a small (550 gallon) diesel fuel tank is located in the pump house. The floor drain in this house has a small (less than 1 square foot) area of staining on the concrete floor. An exterior sump is located in a diked area outside the pump house.

No known release of fuel from these tanks was reported by Girmes Personnel. Review of spill reports on file in the Toxnet Computer Bank does not indicate any petroleum releases.

Demolition Material

Two areas were identified on the plant site that contained demolition debris from various construction/remedial activities at the plant (See Plate 1).

Baseball Field

One of these areas, containing concrete slabs, was located at the rear of the plant near the former baseball field. According to plant personnel, this concrete was generated when Girmes replaced the original floor drains in the plant. Apparently, the ball bearing production by SKF clogged these drains with ball bearings and other material. The original drains were sealed and a new drain system with floor drains and sumps suitable for use with the textile operation was installed. We suggested to Girmes that this demolition debris could

also contain other materials that may be considered environmentally hazardous and that removal of the demolition debris and testing of the soil beneath the area would be prudent.

The debris near the baseball field was removed by Girmes personnel and reportedly taken to a local landfill. No hazardous material was reportedly found during the removal of the debris. On August 7, 1991, John Stewart visually inspected the area and did not observe any remaining debris or signs of contamination of the soils in the disposal area. No soil samples were taken from this area.

Slope Debris Area

Demolition debris was also found along the steep bank behind the maintenance shed between Girmes and the DOT facility (See Plate 1). This material was composed of concrete slabs, roofing paper and tar, wood debris, air filters, cans, and other construction rubble. A small ditch or drainage extended from the base of the debris pile to the bottom of the hill side. Water, which we believe was from the chiller unit, was flowing in the ditch. A sample (GIRSS-2) of the soil and the water flowing in the drainage below the debris pile was collected by John Stewart on May 21, 1991 (See Figure 5). The soil sample was analyzed for TPH and TCLP metals (arsenic and chromium) and the water was analyzed for solvents using Method 624. The analysis detected 160 ppm of a petroleum compound similar to Varsol in the soil. No arsenic or chromium was detected in the soil and no solvents were detected in the water. The laboratory report is included in Appendix A.

Because the source of the Varsol could not be readily identified, we suggested that as much of the debris pile as possible be removed and placed in a landfill. It was hoped that during the debris removal the source of the Varsol might be found. Forty truck loads of material were removed and transported to the landfill. This removal was observed by Mr. Chris Henderson of Bain, Palmer & Associates. No hazardous materials; ie., drums or other material of environmental concern were observed to be present in the debris that was removed. Some concrete rubble and other debris still remains on the hill side.

Four grab samples (SS-1, -2, -3, and -4) of the surface soils beneath the demolition debris were collected by Chris Henderson on July 23, 1991 (See Figure 5). These samples were collected by digging through the concrete to the soil below. These samples were collected and shipped according to protocols established in SW-846 and were analyzed by IEA Laboratories of Cary, North Carolina. The soil was tested for TPH, oil and grease, TCLP metals (arsenic and chromium) and Total Organic Halides (TOX). The laboratory analyses did not detect any metals or halides (TOX), however, elevated levels of oil and grease and TPH compounds were detected in SS-1 and SS-4. Two hundred sixty (260) parts per million of oil and grease compounds and 160 ppm of a petroleum compound similar to #2 fuel oil were detected in SS-1 and 280 ppm of oil and grease compounds were detected in SS-4. It should be noted that the levels of TPH and oil and grease are above the State's acceptable limits. The laboratory results are included in Appendix A.

Drainage Area

On August 9, 1991, John Stewart returned to the site to inspect the slope debris area and to try and determine the extent of soil contamination of the drainage area. Ten hand auger soil samples were collected in the drainage area and field observations, ie. soil color, texture, and odors were noted. The results of this field investigation indicated that the horizontal extent of soil contamination in the drainage area was limited to an area approximately 50 feet wide and 200 feet long. A determination of vertical extent was not made at this time. One of the ten soil samples (GS-1) was saved and sent to the laboratory for analysis. The results of the analysis confirmed the presence of a petroleum compound similar to Varsol at a level of 430 ppm.

The results of the soil samples collected from the drainage area detected TPH concentrations above the State of North Carolina's accepted levels of 10 ppm. It was decided to excavate the contaminated soil in the area below the drainage pipe and treat the soil off-site. On November 7 and 8, 1991, Randy Cavallier observed the excavation of approximately 1000 cubic yards of soil from this area.

To confirm the complete removal of the contaminated soil, five soil samples (SS-1 through SS-5) were collected. Figure 5 shows the approximate size and shape of the excavation. Each soil sample was collected in appropriate laboratory cleaned bottles, placed on ice and shipped to the laboratory under chain-of-custody. The samples were analyzed for TPH compounds using SW-846 Methods 3550 and 5030. No petroleum compounds were detected in any of the samples. The excavation was then backfilled with clean soil. The laboratory results are included in Appendix A.

The contaminated soil was stockpiled on-site. Prior to spreading the soil, a 10 mil. layer of plastic was spread on the ground. The stockpile was then bermed with clean soil and covered with a sheet of plastic. For disposal purposes, a single sample (GIRSP-1) of the most highly contaminated soil was collected on November 8, 1991 from the stockpile material and sent to the laboratory for analysis. The sample was analyzed for: ignitibility, pH, TOX, percent moisture, volatile and semi-volatile compounds, BTEX, PCBs and pesticides, TPH and TCLP metals. The analyses detected low concentrations of petroleum aromatics, TPH, PCBs, and semi-volatile compounds. To confirm the presence and concentration of PCBs, the stockpile was further sampled. Twelve randomly spaced samples were collected on January 28, 1992 and analyzed for PCBs using field test kits. Half of the samples showed positive for PCBs. Four of the samples were sent to the laboratory to confirm the field tests. The laboratory results detected PCB concentrations ranging from 1.9 to 5.4 ppm. These levels are well below the US EPA's action level of 50 ppm for PCBs. All of the stockpile sample results are included in Appendix A.

Asbestos

Non-friable asbestos containing material was observed on the ceiling of the dye house on the day of the inspection. This material has been fixed to the ceiling by epoxy painting techniques and according to plant personnel has been tested and is in compliance with current asbestos abatement standards. No test data was available on this material. Appropriate safety measures should be taken in this area if any remodeling, demolition, or

altering of the asbestos containing material takes place. A detailed inspection for asbestos was not conducted throughout the plant and no samples were collected for asbestos identification.

PCB's

A single 750 KV pad mounted transformer was located behind the building. A plate on the transformer identified it as a non-PCB containing transformer.

REMEDIAL ACTIVITIES RELATED TO CLOSING

As part of the shut down process, the following activities related to environmental remediation have been completed at the plant:

- Equipment removal
- Washdown of drains and sumps
- Removal of a propane tank
- Removal of demolition debris from the ball field and bank area
- Shut down and cleaning of the equalization basin at the WWTP
- Removal of lint from the WWTP area and soil testing
- Testing of the existing UST area
- Previous removal of one 550 gallon and one 30,000 gallon UST
- Leak testing of the remaining UST's
- Testing of an on-site well
- Soil removal, testing, and disposal.

CONCLUSIONS AND RECOMMENDATIONS

For the last 18 years the site has been occupied by a textile plant. A review of public information available from federal, state and local agencies did not reveal any environmental problems associated with the site or immediate site area which might impact the property. An inspection of the present facility and review of its operation over the last 18 years did not identify any process which would have generated hazardous wastes. The sampling and testing

of soil which was in contact with lint produced in the textile operation did not detect any leachable concentrations of arsenic or chromium; two metals commonly associated with the dying process in the textile industry. The sampling of soil and water from the drainage area located on the north side of the property did not detect any leachable concentrations of arsenic or chromium or volatile organic compounds. It should be noted that the sampling conducted during the investigations has been limited and confined to those areas where surface evidence or information provided by the owner indicated possible contamination.

Inspection of the site grounds did identify several areas of soil contamination by petroleum hydrocarbons, some of which we believe may be attributed to the daily operation of the prior property owners. It was not the intent of this report to identify any potentially responsible parties. Each of these areas is summarized below.

Area 1 - Underground Storage Tank Area - Samples collected from three test borings drilled in the area of the present USTs, detected oil and grease concentrations above the State's present acceptable level of 10 ppm or natural background concentrations of oil and grease in the soil. Tank tightness test of the two USTs did not detect any leaks above 0.01 gph. During an inspection of this area, oil stained soil was seen around the UST fill ports and around the pump house. We believe the oil and grease compounds detected in the soil originated from surface spills which have occurred over the last 18 years during the normal filling operations of the USTs. These compounds have low solubilities, are relatively immobile, and in our opinion do not pose a long term environmental hazard. However, the State may request additional investigation in this area to determine the extent of contamination.

Recommendation: To eliminate future spills from impacting the soils in the UST area, we recommend the USTs be retrofitted with overspill protection devices, and an impermeable layer, ie. a concrete pad, be placed over the USTs and around the pump house. A sump or drain collection system should be

constructed to return spilled oil into the USTs. Contaminated soil removed during the construction should be handled and treated according to applicable State regulations and guidelines.

Area 2 - Debris Pile - Analysis of two soil samples collected from under the debris pile detected concentrations of oil and grease and TPH compounds over the State's acceptable levels. The soil contamination in this area appears to be confined to several small areas, and thus possibly the result of small, one time spills.

Recommendations: Because the contamination is limited, buried under tons of concrete and there are no potential receptors in the immediate area, it is our opinion that the contaminated soil should be allowed to naturally biodegrade over time and no further action should be required. However, the State may request additional investigation in this area to determine the extent of contamination.

Area 3 - Drainage Area - Soil samples collected from this area identified petroleum contaminated soil above the State's acceptable level. This soil was excavated and will be treated off-site. Soil samples collected in the excavation indicate all the contaminated soil was removed from this area. The source of contamination is believed to be a drain pipe which was uncovered during the excavation of the soil in the drainage area. Though we could not physically trace the pipe to the plant, we believe it was connected to the floor drain system of the plant.

QUALIFICATIONS

This Environmental Audit is based on readily available information that is documented in the public domain, from on-site reconnaissance level inspections by our staff, from sampling and testing of various media at the site, and interviews with Girmes Plant personnel and

management. This assessment included a limited environmental sampling program considering the size of the plant site and was directed by visible surface conditions at the time of our inspection. However, we are of the opinion that the level of investigation conducted and reported herein is consistent with our understanding of the history of the plant, their waste management practices based on the information and the site history provided by the owner, and our observations of the physical evidence collected during the site inspection. In the event future testing is completed, we reserve the right to revise our opinion as to the presence of environmental hazards at the site.

Bain, Palmer and Associates is of the professional opinion that, except for the petroleum contamination as noted in the conclusions, that significant chemical or hazardous substance contamination does not exist within the site area. However, even a comprehensive sampling and testing program may fail to detect certain hidden conditions. Conditions that are properly inferred to exist between sampling points may differ significantly from those that actually exist. Likewise, the conclusions contained herein are only valid in the light of the data presented. Should future events or an unforseen situation change the present status of the property after the date of this report, the conclusions of this report will be considered invalid unless further review and/or further investigations are performed.

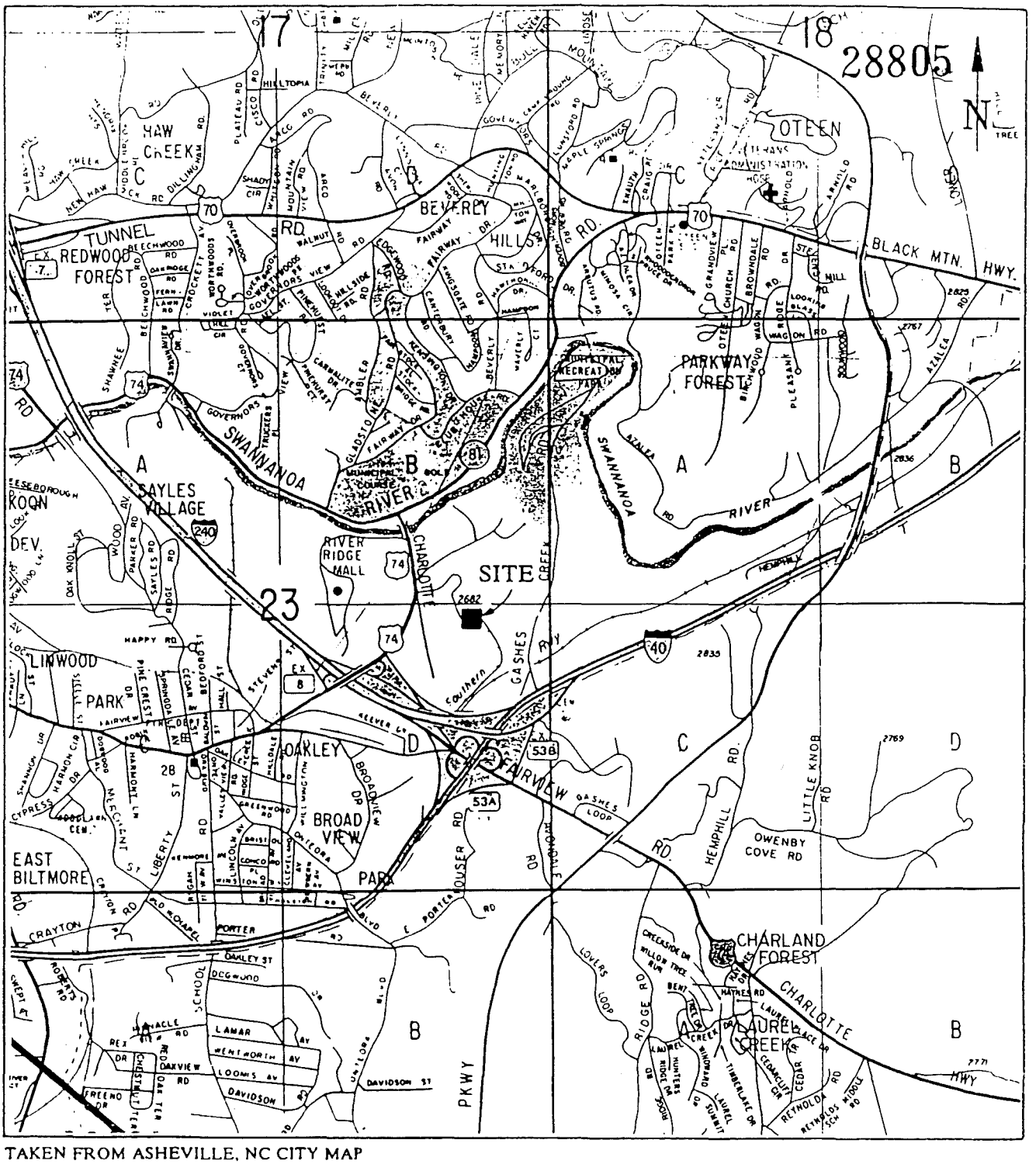

TAKEN FROM ASHEVILLE, NC CITY MAP

1000 0 2000 3000

SCALE IN FEET

J.L. de BALL GIRMES OF AMERICA

BAIN, PALMER & ASSOCIATES, INC.

SITE LOCATION MAP

FIGURE 1

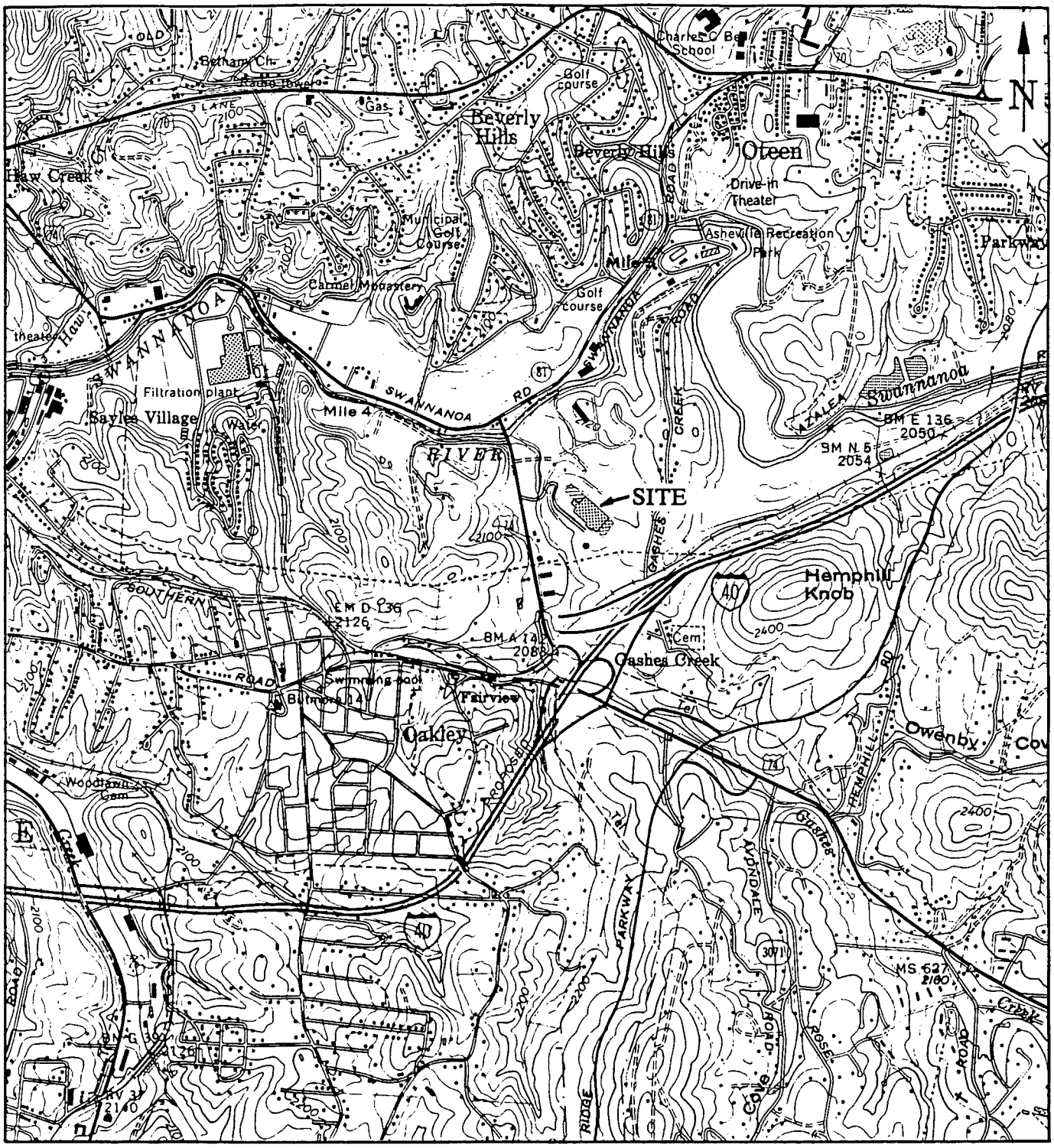

ASHEVILLE AND OTEEN QUADRANGLES
NORTH CAROLINA
7.5 MINUTE SERIES

1000 0 2000 3000
SCALE IN FEET

J.L. de BALL GIRMES OF AMERICA

BAIN, PALMER & ASSOCIATES, INC.

TOPOGRAPHIC MAP

FIGURE 2

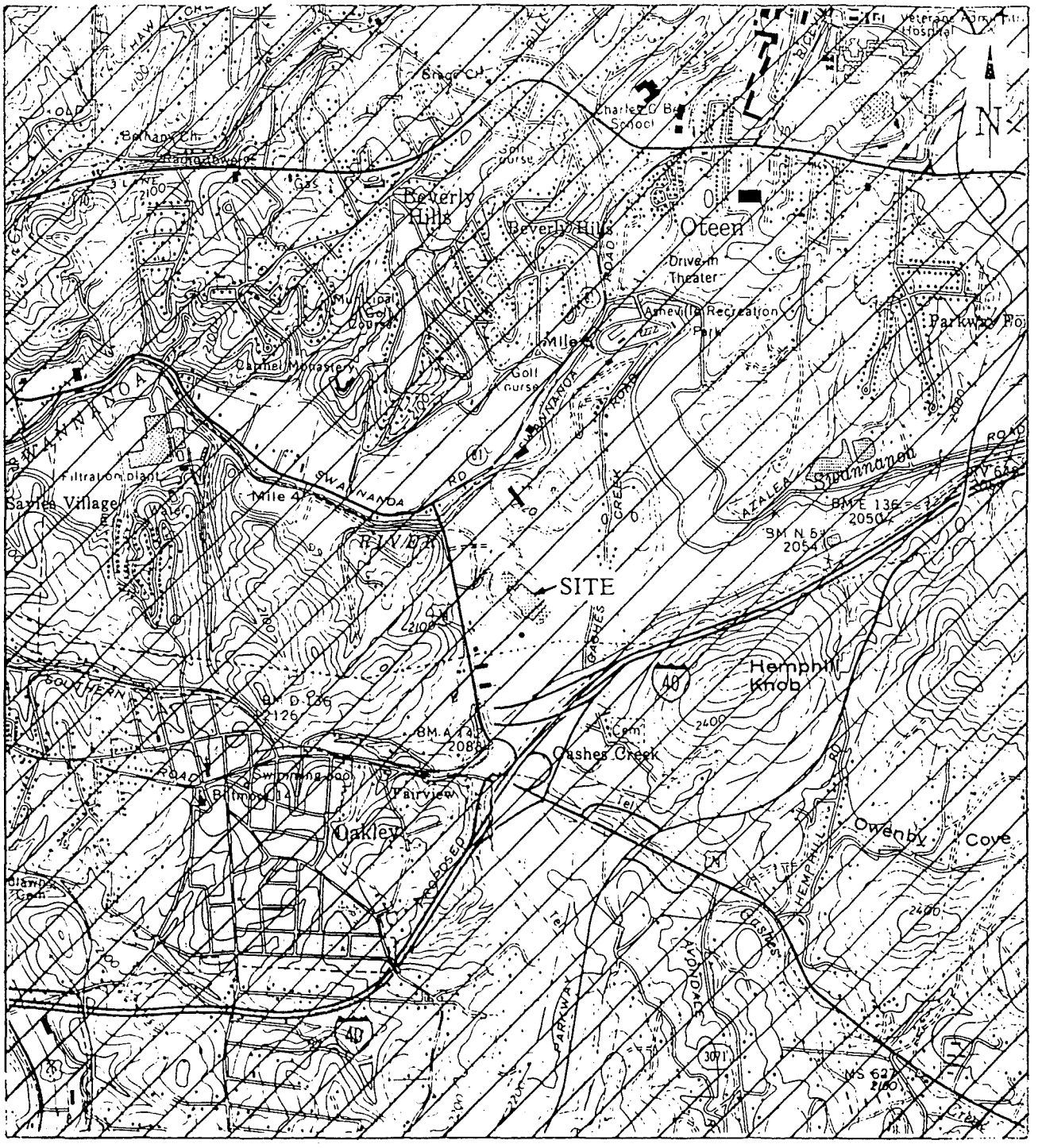

ASHEVILLE AND OTEEN QUADRANGLES
NORTH CAROLINA
7.5 MINUTE SERIES

1000 0 2000 3000
SCALE IN FEET

EXPLANATION

ALLIGATOR BACK FORMATION
(MUSCOVITE-BIOTITE GNEISS)

J.L. de BALL GIRMES OF AMERICA

BAIN, PALMER & ASSOCIATES, INC.

GEOLOGIC MAP

FIGURE 3

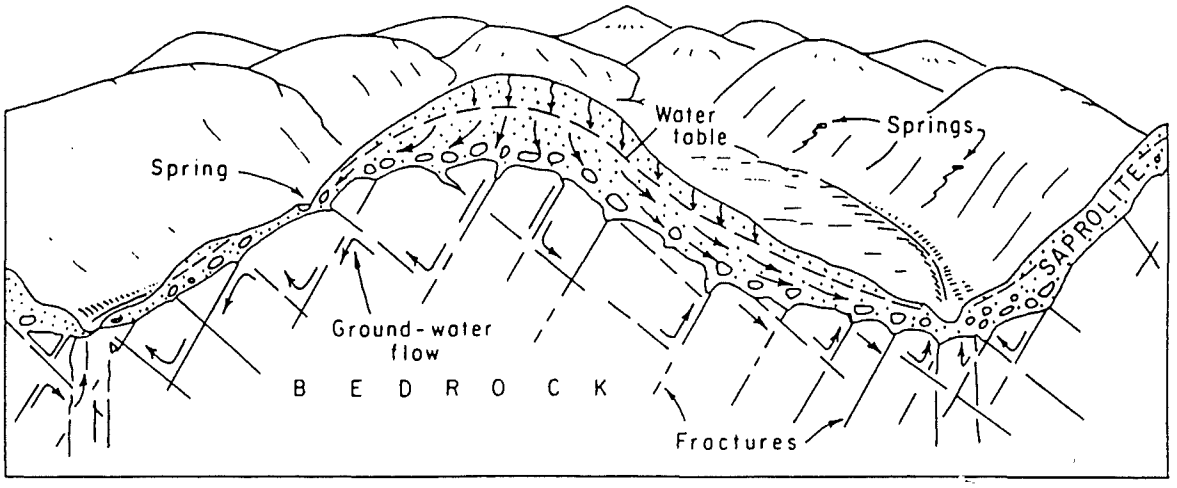

NO SCALE

J.L. de BALL GIRMES OF AMERICA

BAIN, PALMER & ASSOCIATES, INC.

PIEDMONT GROUNDWATER SYSTEM

FIGURE 4

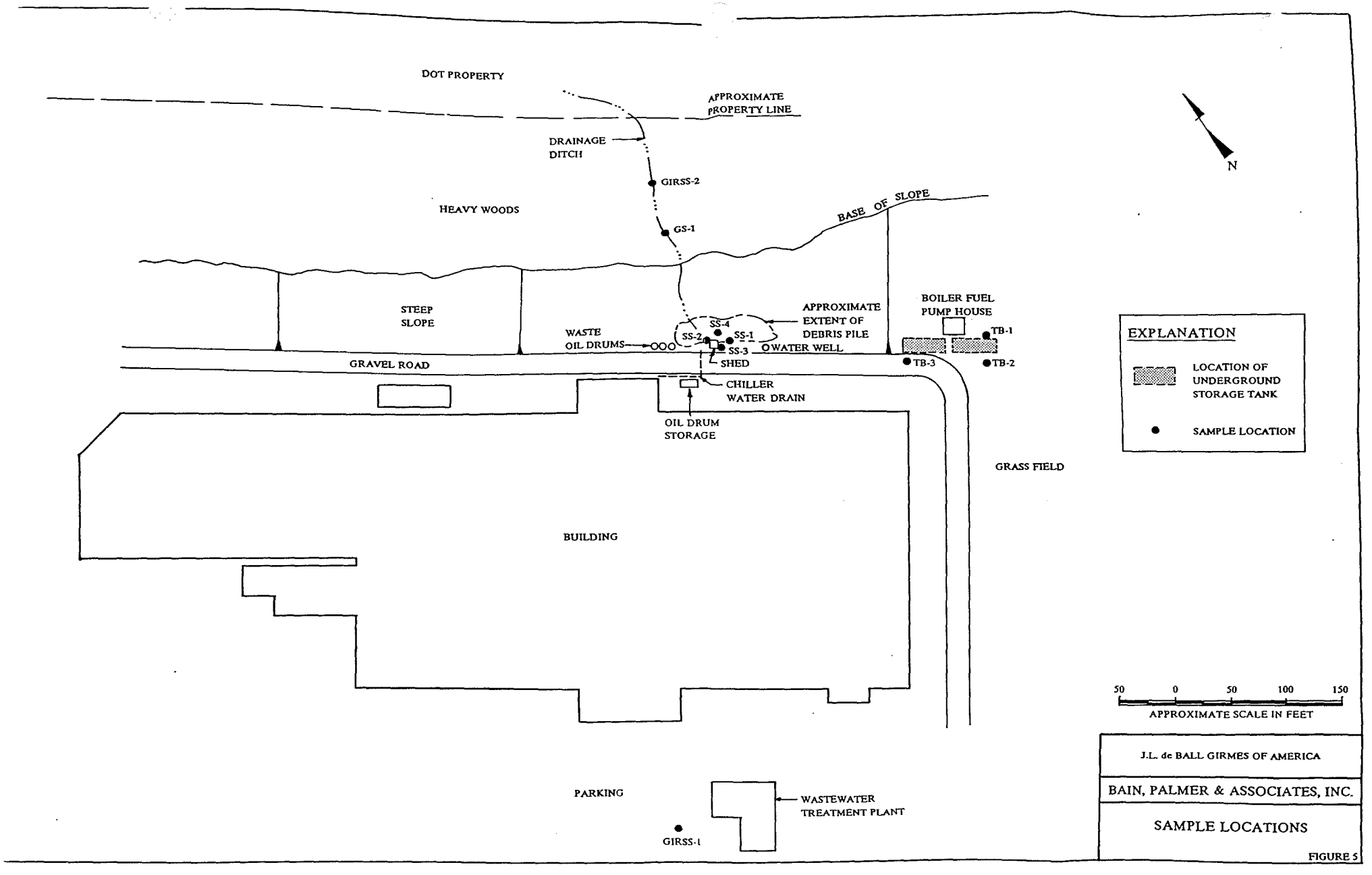
DOT PROPERTY
APPROXIMATE PROPERTY LINE
DRAINAGE DITCH
GIRSS-2
GS-1
HEAVY WOODS
BASE OF SLOPE
STEEP SLOPE
WASTE OIL DRUMS
SS-4
SS-2
SS-1
SS-3
APPROXIMATE EXTENT OF DEBRIS PILE
WATER WELL
SHED
GRAVEL ROAD
CHILLER WATER DRAIN
OIL DRUM STORAGE
BOILER FUEL PUMP HOUSE
TB-1
TB-2
TB-3
GRASS FIELD
BUILDING
PARKING
WASTEWATER TREATMENT PLANT
GIRSS-1
N
EXPLANATION
LOCATION OF UNDERGROUND STORAGE TANK
SAMPLE LOCATION
50 0 50 100 150
APPROXIMATE SCALE IN FEET
J.L. de BALL GIRMES OF AMERICA
BAIN, PALMER & ASSOCIATES, INC.
SAMPLE LOCATIONS
FIGURE 5

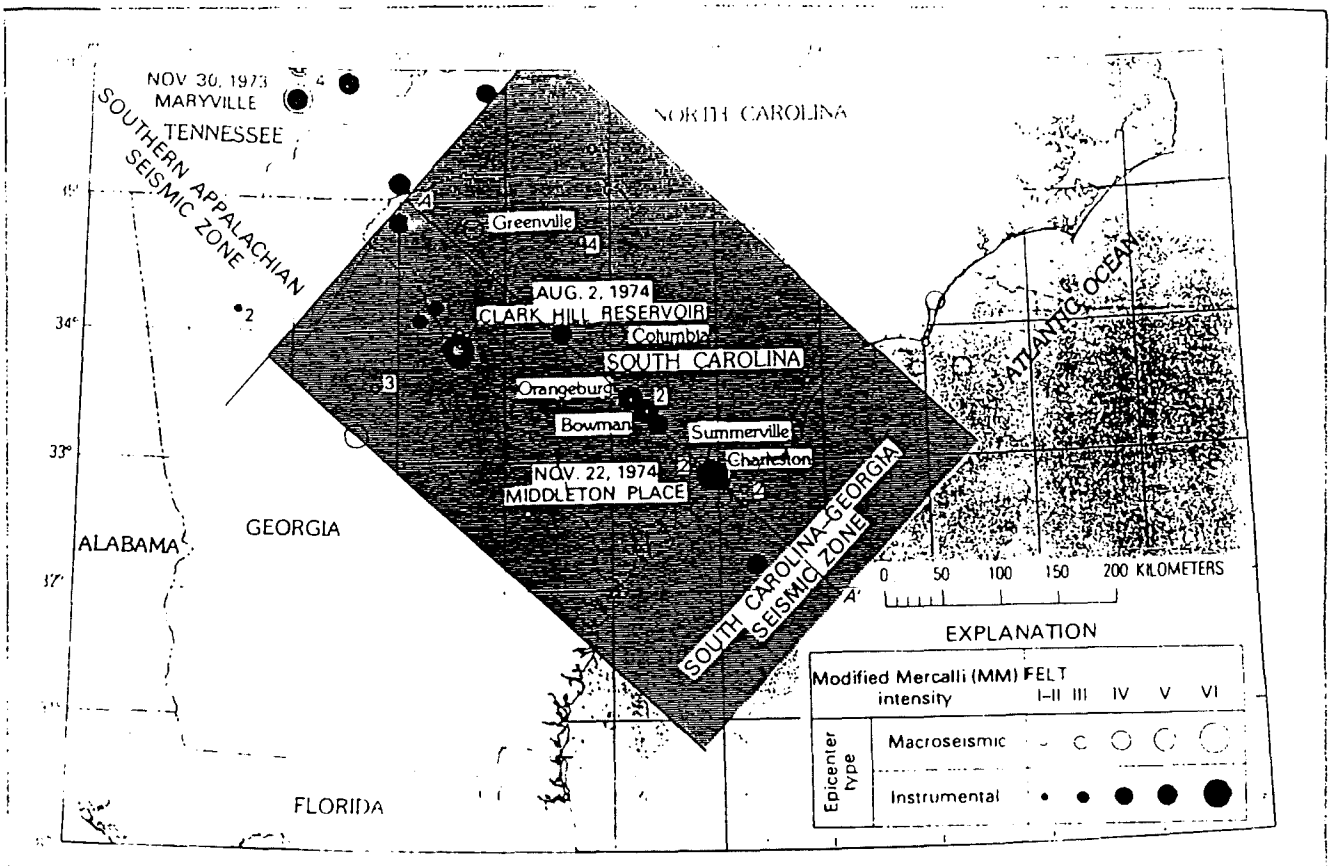

Seismicity of the southeastern United States, 1961-75. Figure shows the relationship of the South Carolina-Georgia seismic zone to other seismicity in the southeastern United States. The axis A–A' is the approximate center line of the rectangle defining the South Carolina-Georgia seismic zone. Numbers beside the epicenter symbols show the number of events recorded. The macroseismic epicenters were determined from accounts of damage and felt reports, whereas instrumental epicenters were determined from seismographic data.

FROM STUDIES RELATED TO THE CHARLESTON, SOUTH CAROLINA, EARTHQUAKE OF 1886 - A PRELIMINARY REPORT, USGS PROFESSIONAL PAPER 1028

J.L. de BALL GIRMES OF AMERICA

BAIN, PALMER & ASSOCIATES, INC.

SEISMICITY MAP

FIGURE 6

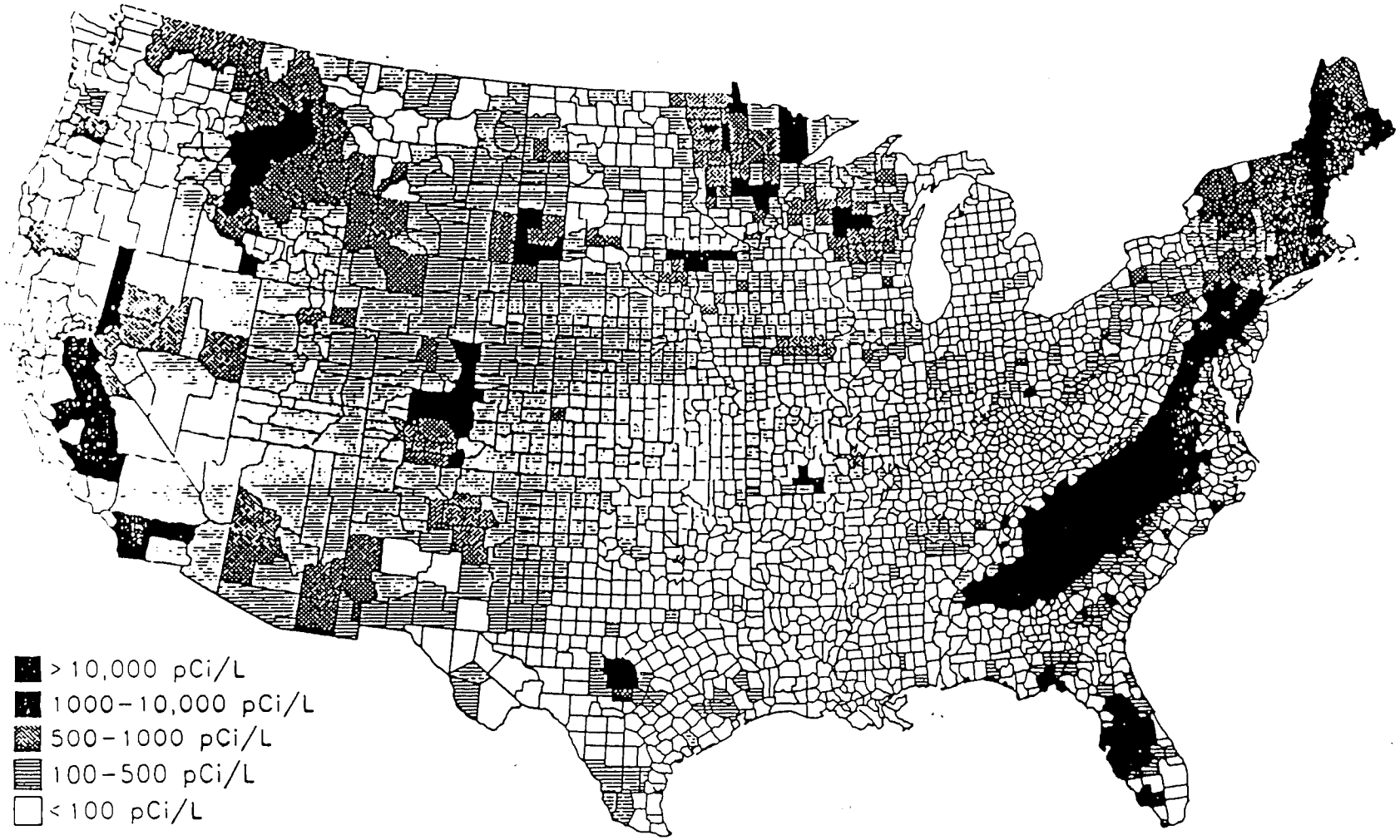

GENERALIZED MAP SHOWING THE OCCURRENCE OF RADON
BY COUNTY FOR SELECTED CATEGORIES OF CONCENTRATION RANGES

J.L. de BALL GIRMES OF AMERICA

BAIN, PALMER & ASSOCIATES, INC.

RADON OCCURRENCE MAP

FIGURE 7

SITE PHOTOS

SITE PHOTOS

1. REAR DRIVE OF PLANT (BANK AREA TO RIGHT)

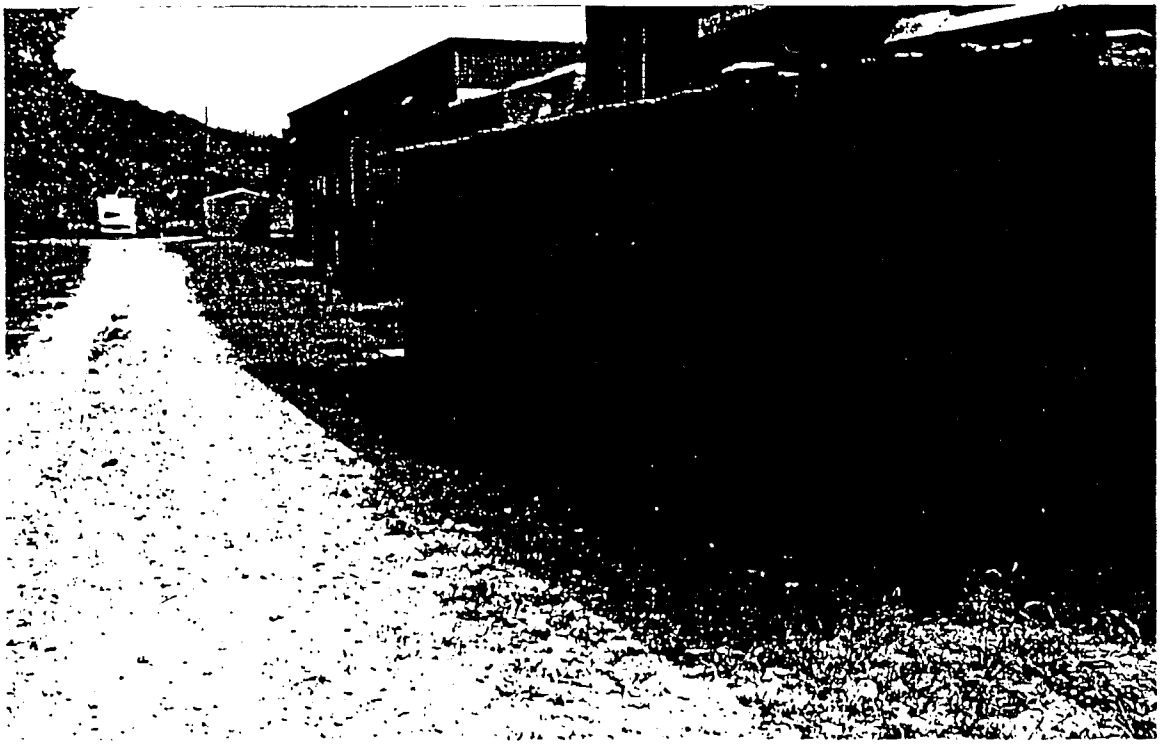

2. OIL/LUBE STORAGE BUILDING

3. INTERIOR OF OIL/LUBE ROOM

4. WASTE OIL DRUMS NEAR BANK EDGE

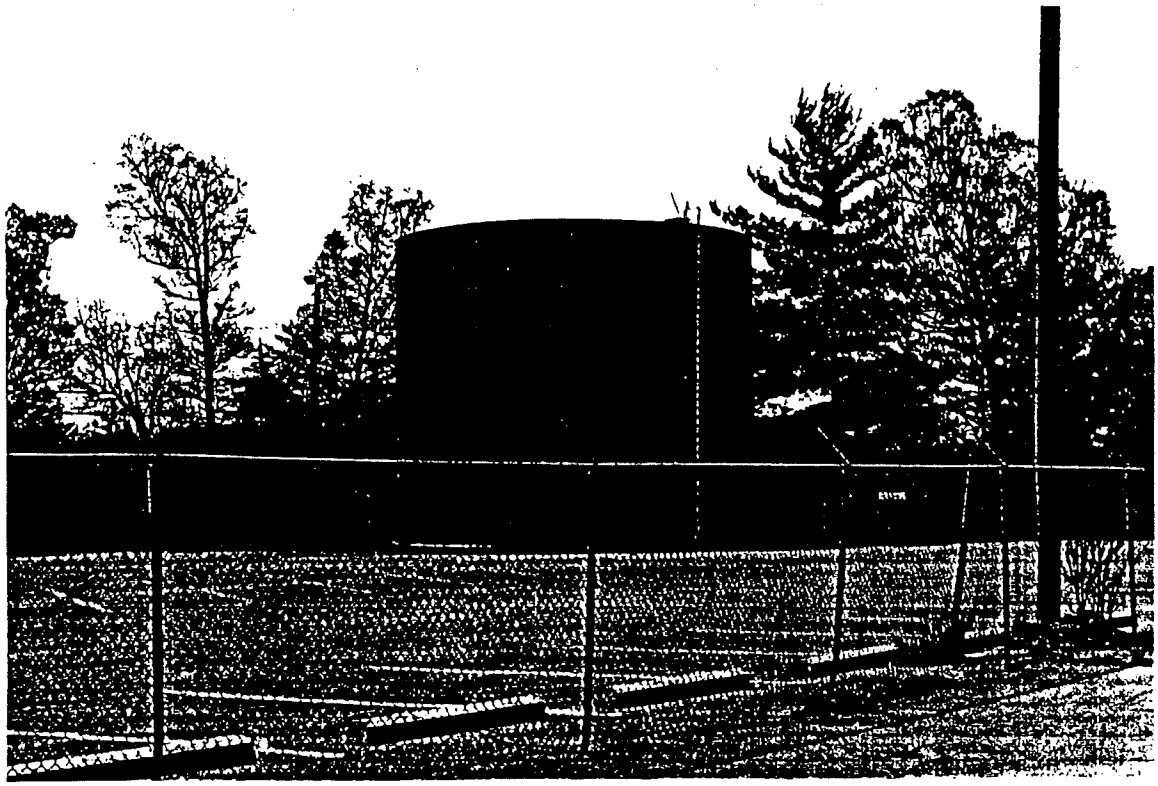

5. FIRE WATER TANK

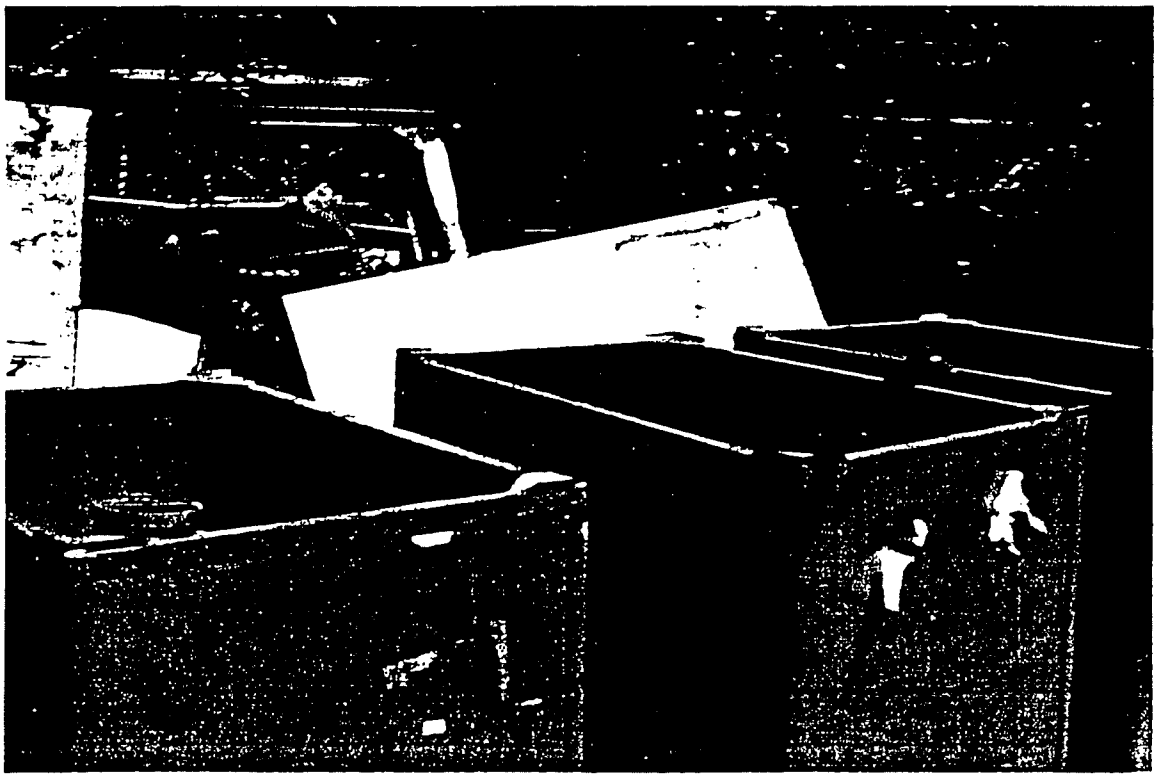

6. METAL HOPPERS

7. DISMANTLED AIR UNIT

8. HYDRAULIC OIL NEAR WWTP

WASTEWATER TREATMENT PLANT PHOTOS

WASTEWATER TREATMENT PLANT SITE PHOTOS

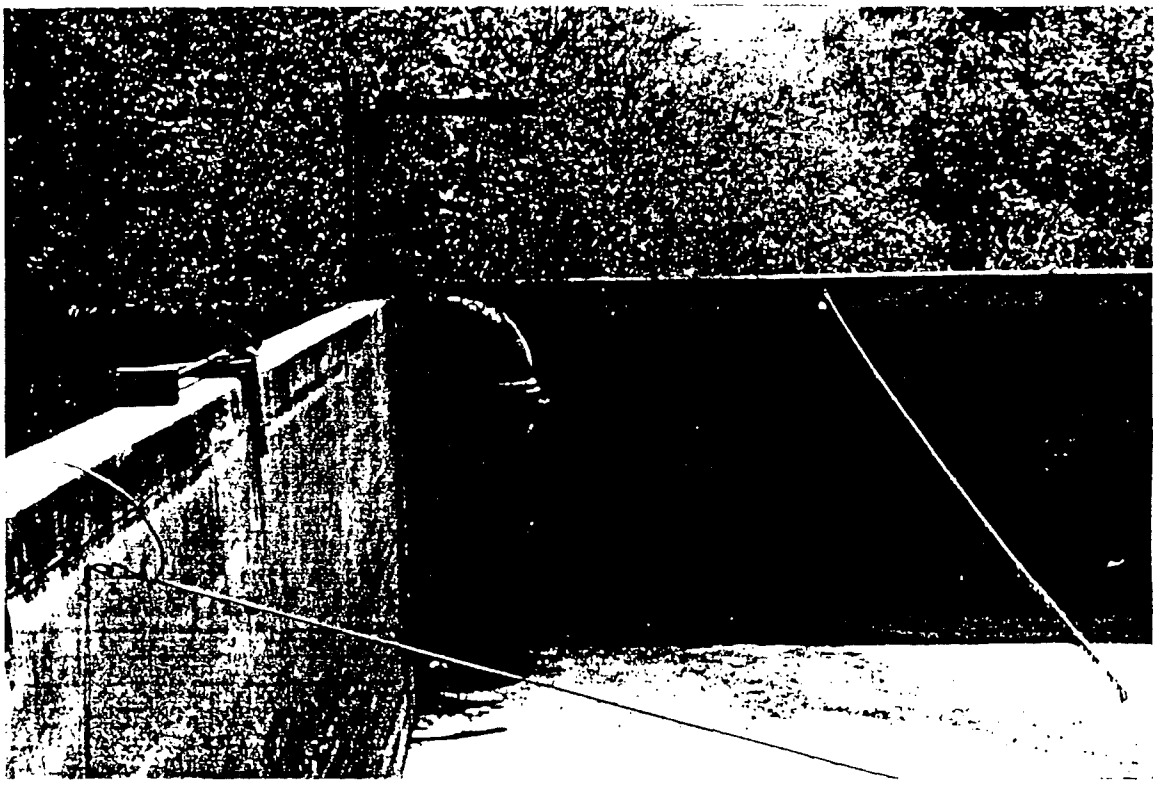

1. AERATION BASIN

2. OVERFLOW IN AERATION BASIN

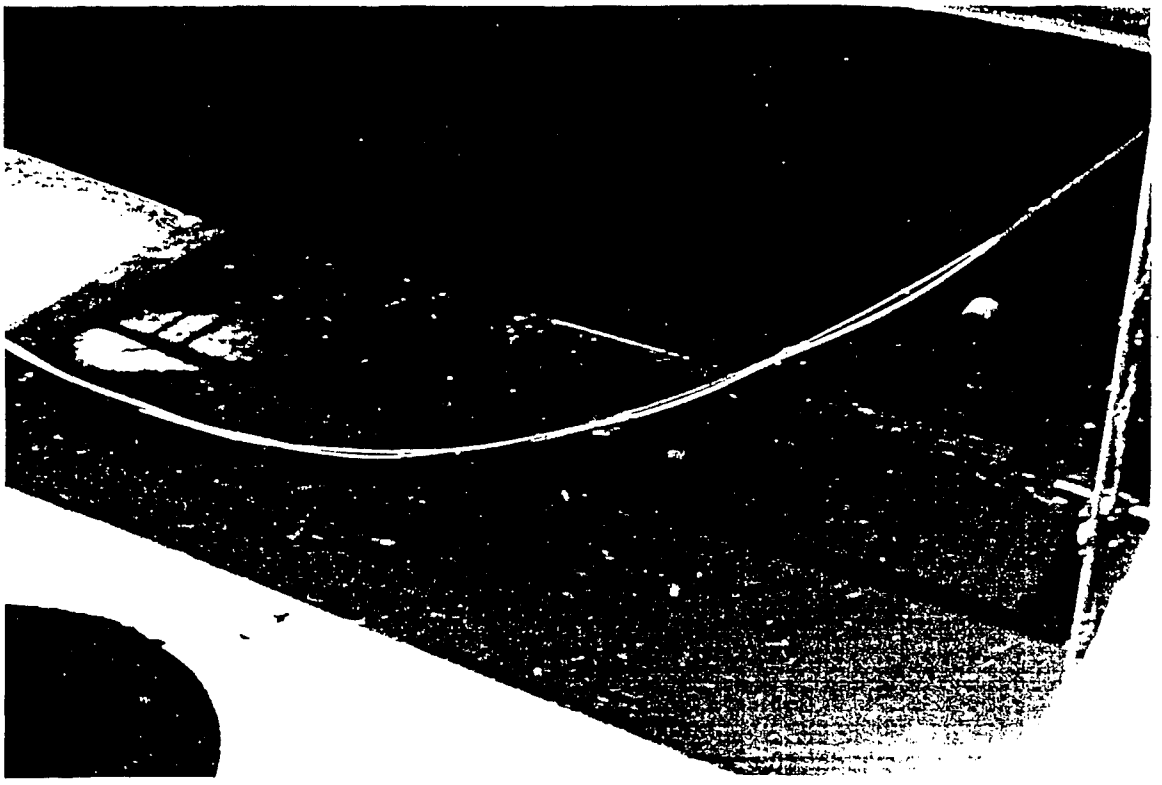

3. INTERIOR OF AERATION BASIN

4. LINT DISCHARGE LINE

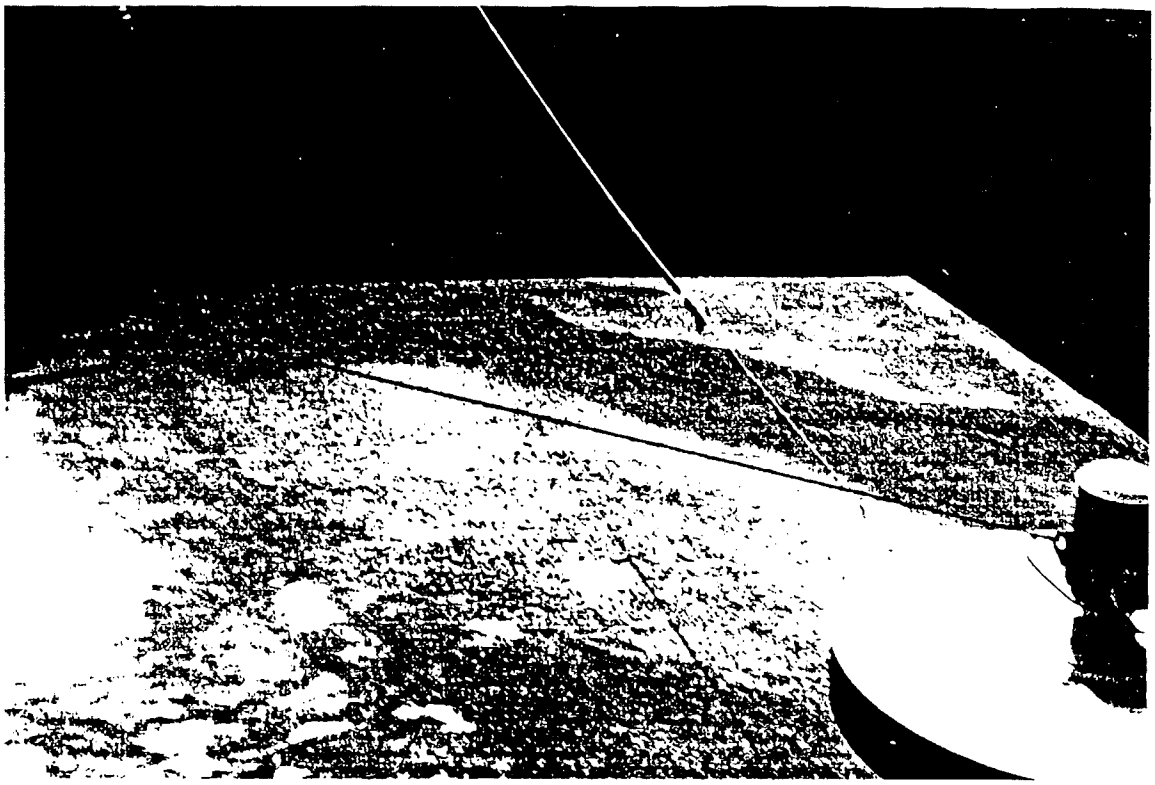

5. FLOATING AERATION IN BASIN

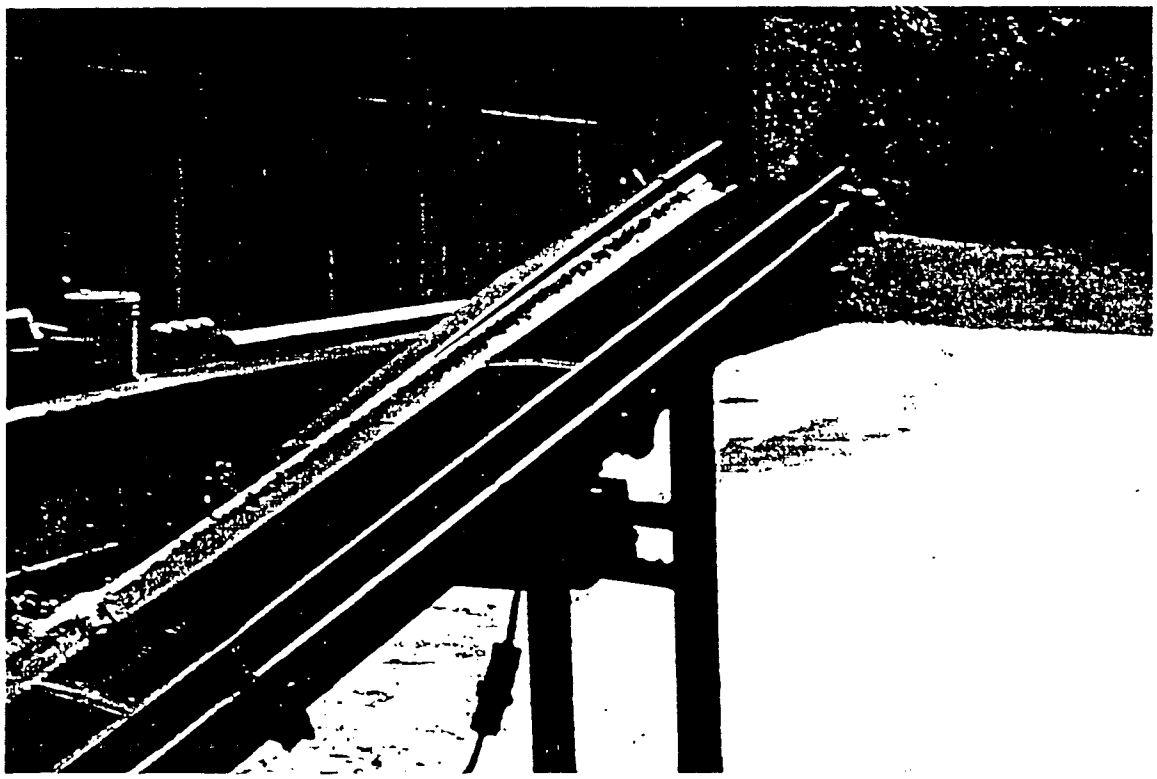

6. LINT CONVEYOR SYSTEM

7. LINT DEBRIS NEAR AERATION BASIN

8. DISCHARGE FROM PLANT WWTP TO POTW

BASEBALL FIELD DEBRIS BEFORE REMEDIATION

BASEBALL FIELD DEBRIS BEFORE SITE REMEDIATION

1. CONCRETE RUBBLE FROM INTERIOR DRAINS

2. DEBRIS PILE

3. CONCRETE RUBBLE

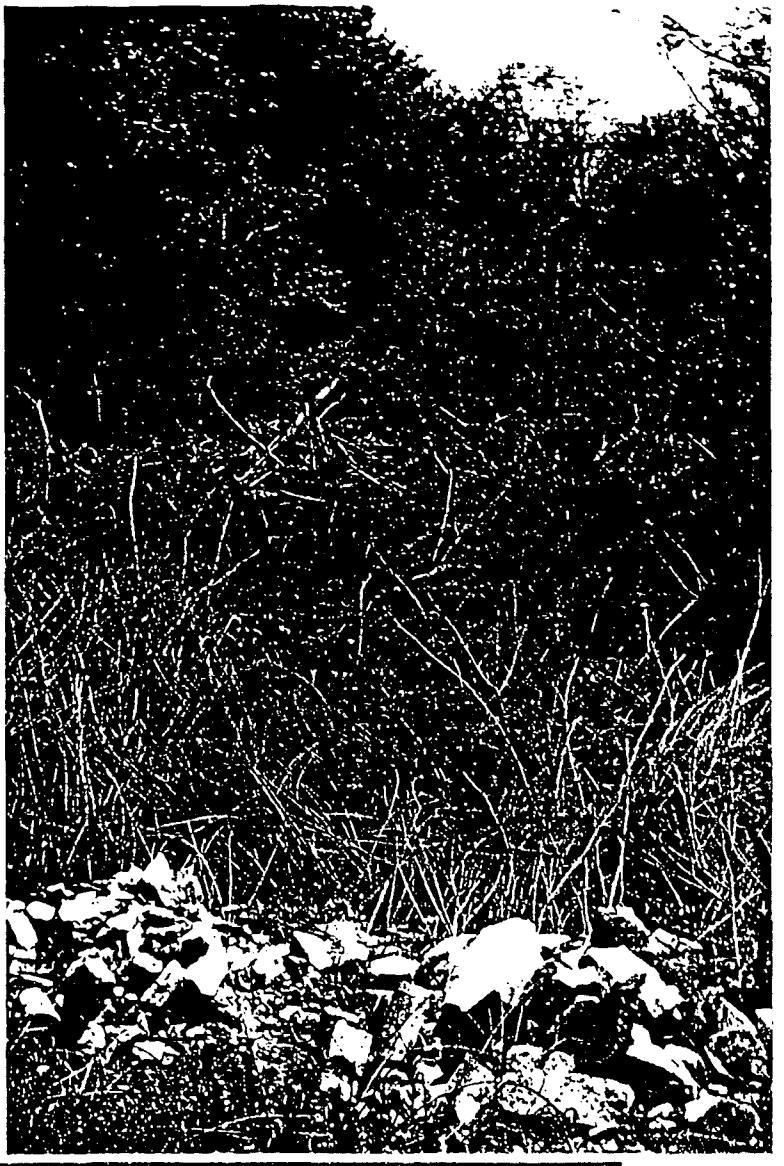

4. DUMPED CONCRETE

5. ABOVE GROUND TANK SUPPORT (TANK NOT IN PLACE)

6. BARE AREA ON BALL FIELD (NO STAINING)

HILLSIDE DEBRIS PRIOR TO REMOVAL

HILLSIDE DEBRIS PRIOR TO REMOVAL

1. METAL STOCKPILE

2. DRAIN LINE AND UNLABELED JUG

3. DRAIN LINE

4. DRUMS

5. CANS/DRUMS

6. ROOFING DEBRIS

7. DEBRIS

8. DEBRIS

9. CRUSHED DRUMS

10. PVC PIPE

11. DEBRIS PILE

12. DEBRIS PILE

13. DEBRIS PILE

14. DEBRIS PILE

15. DRAINAGE FEATURE SHOWING OIL STAINING

16. DRAINAGE FEATURE

17. BROKEN DRUMS

18. DRUMS

BANK REMEDIATION PHOTOS

BANK REMEDIATION PROJECT PHOTOS

1. DRAIN PIPE PROTRUDING FROM BANK

2. LOOKING DOWNSLOPE FROM CREST TOWARD DOT FACILITY

3. HAUL/ACCESS ROAD

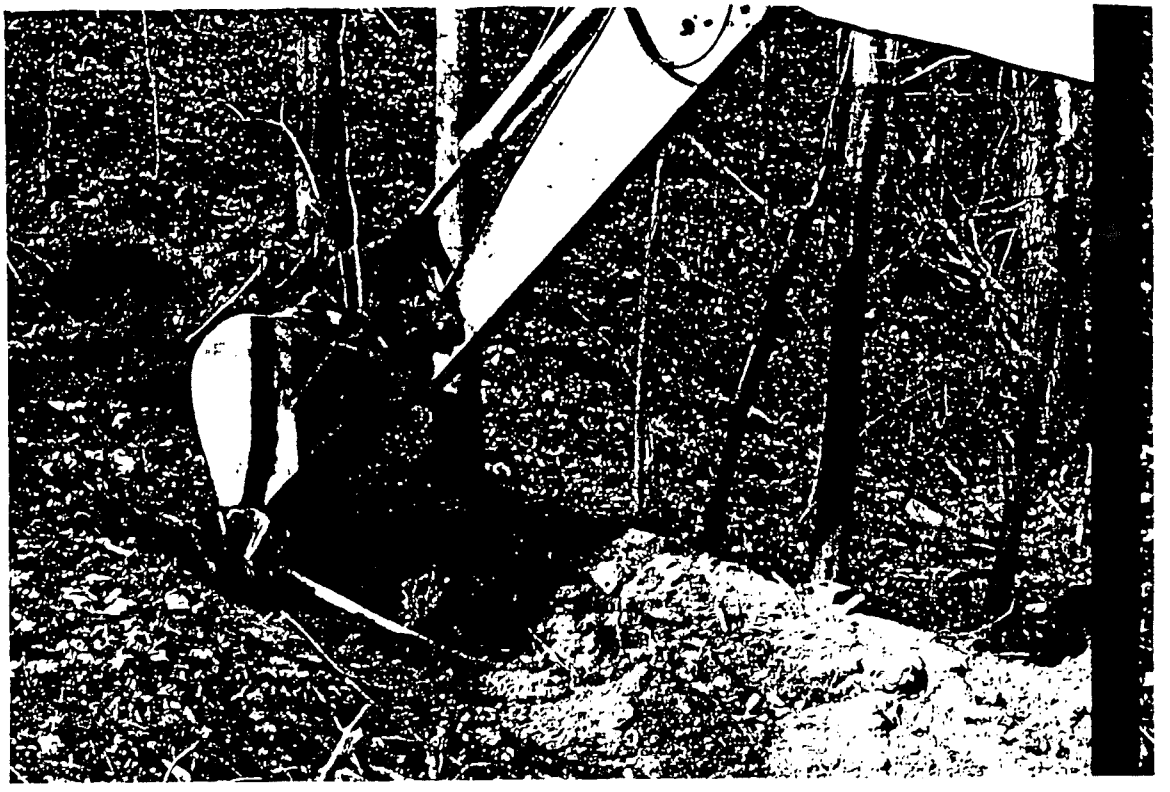

4. BURIED PIPE EXCAVATION

5. PVC AND IRON PIPE

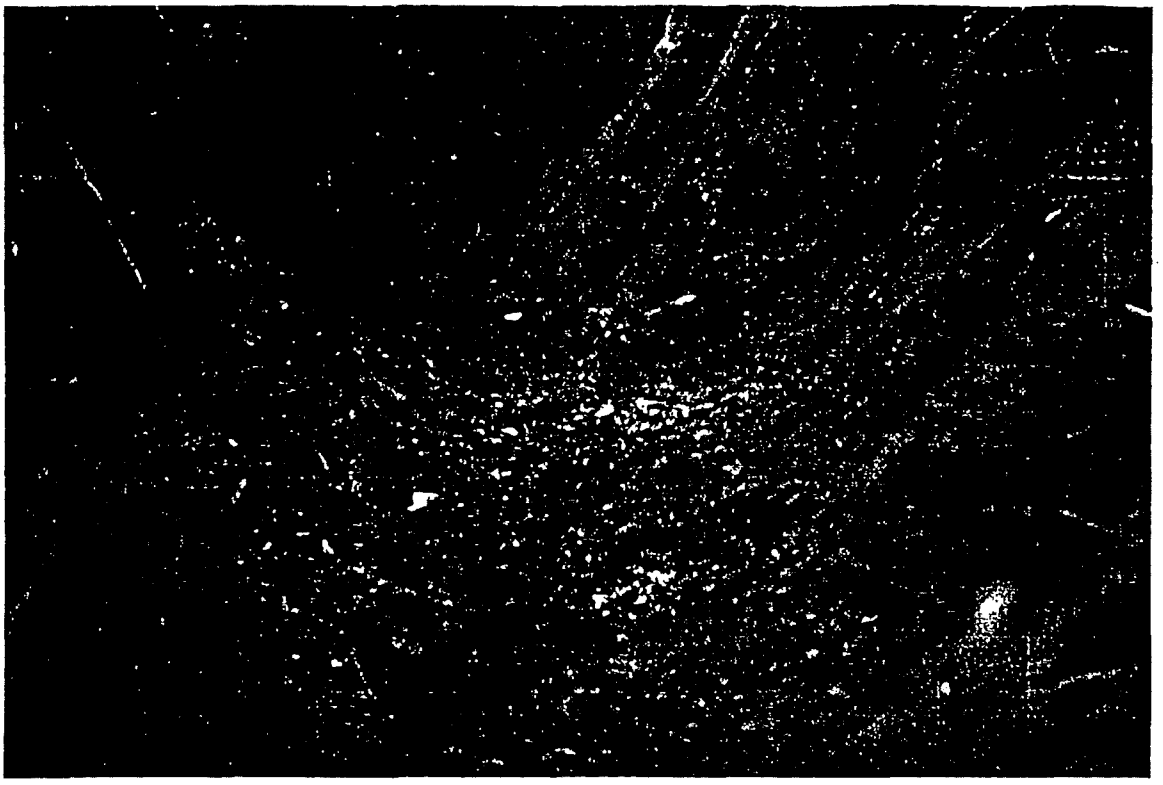

6 & 7 EXCAVATION PHOTOS

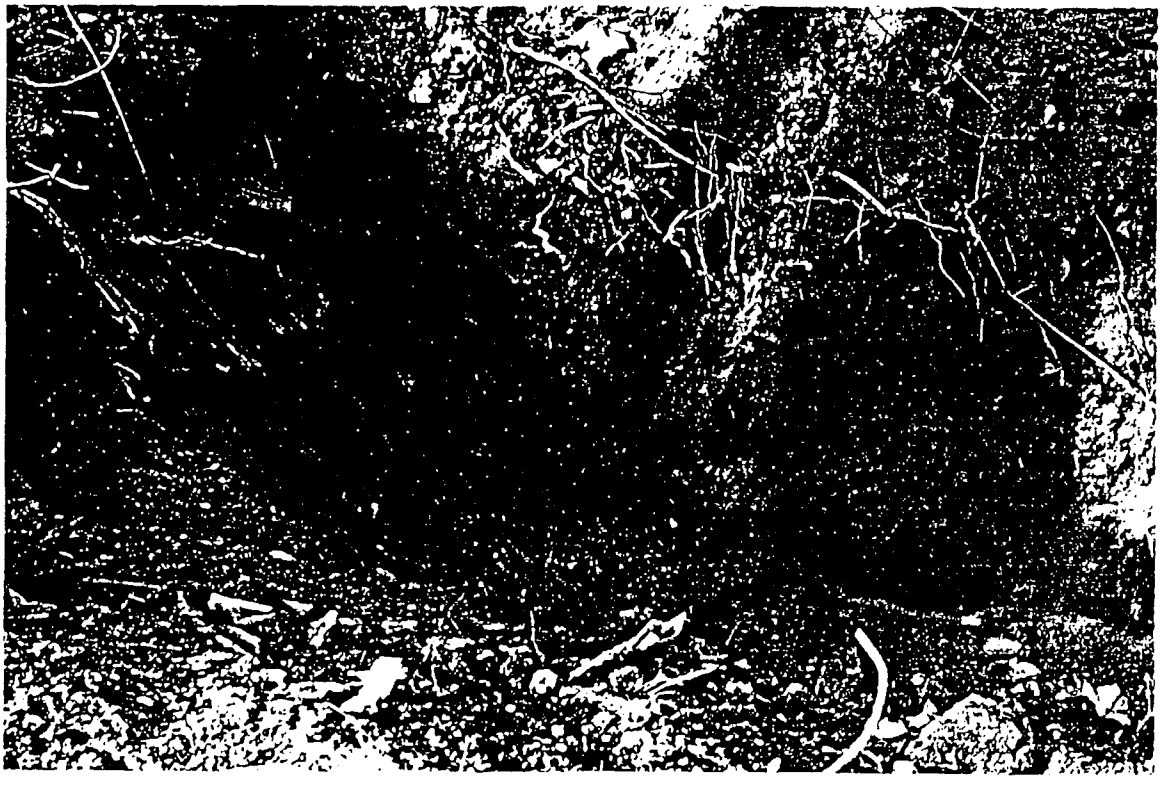

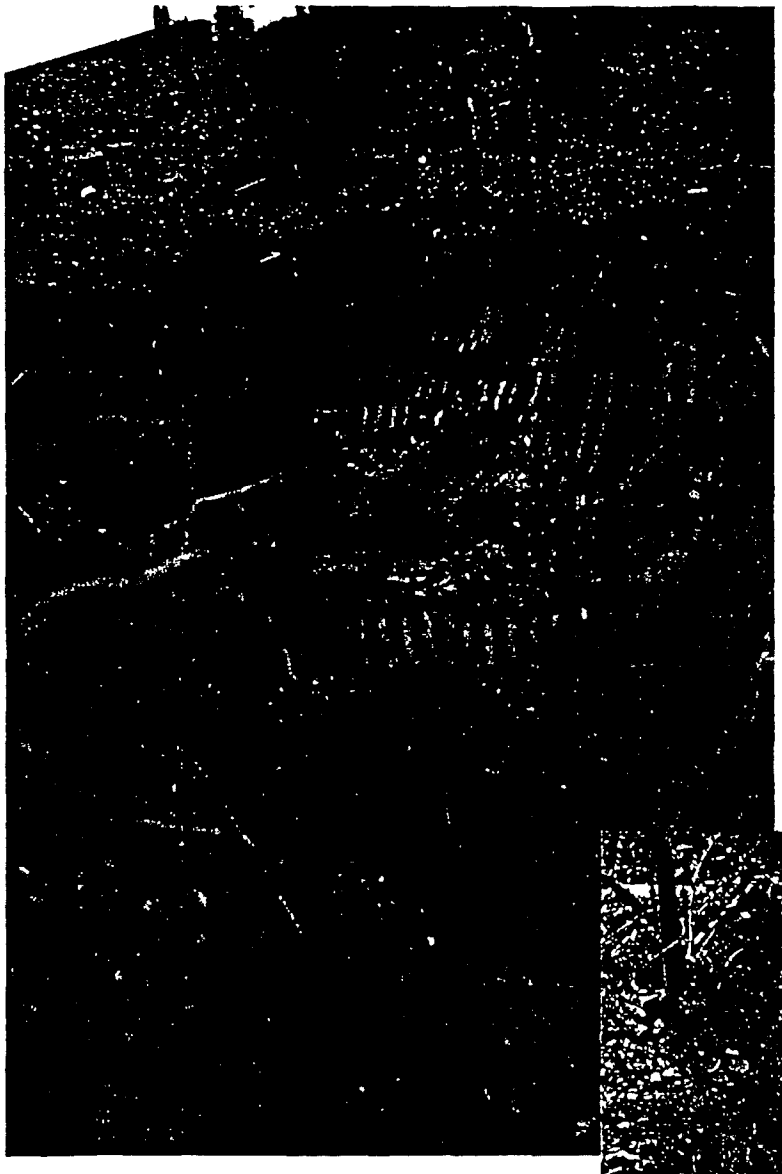

8. EXCAVATION PHOTOS

9. EXCAVATION PHOTOS

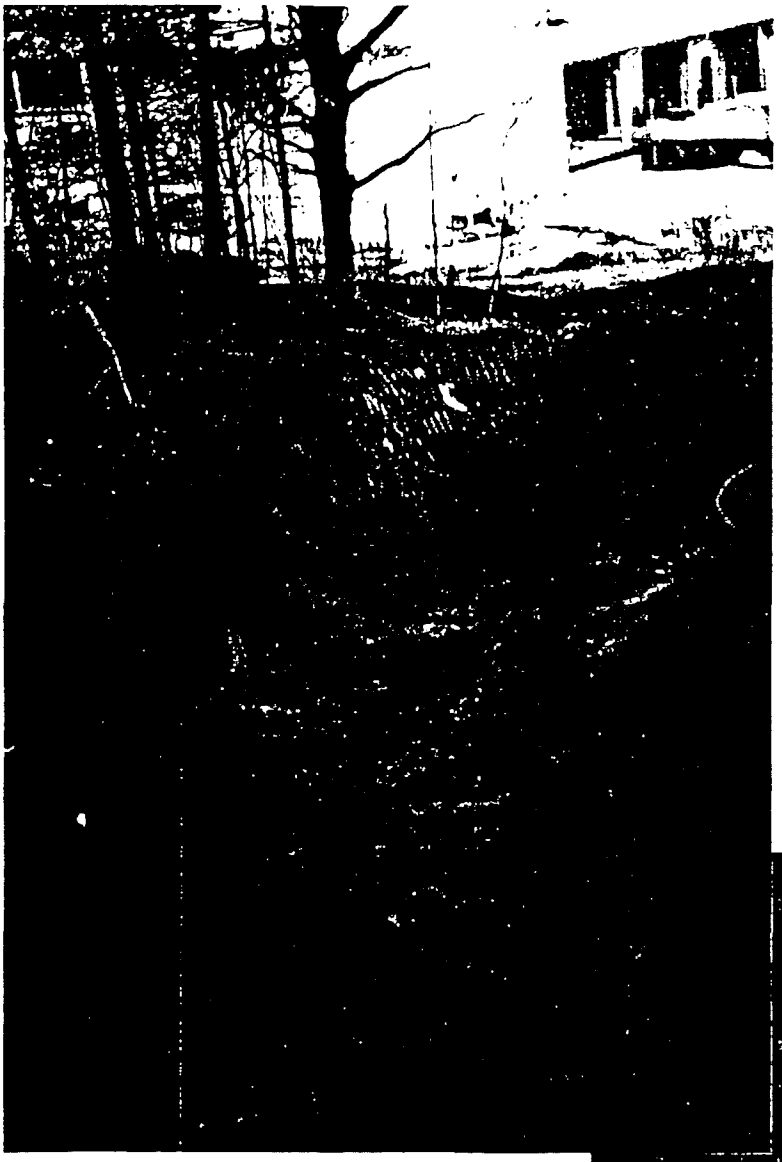

10. EXCAVATION PHOTOS

11. EXCAVATION PHOTOS

12. STOCKPILE PREPARATION

13. SOIL STOCKPILE

BANK AREA AFTER DEBRIS REMOVAL

BANK AREA AFTER INITIAL DEBRIS REMOVAL

1. CONCRETE MATERIAL LEFT IN PLACE

2. CONCRETE MATERIAL LEFT IN PLACE

3 & 4 MATERIAL LEFT IN PLACE

5 & 6 MATERIAL LEFT IN PLACE

7 & 8 LEAD TURNINGS BELIEVED TO BE FROM SKF ACTIVITIES

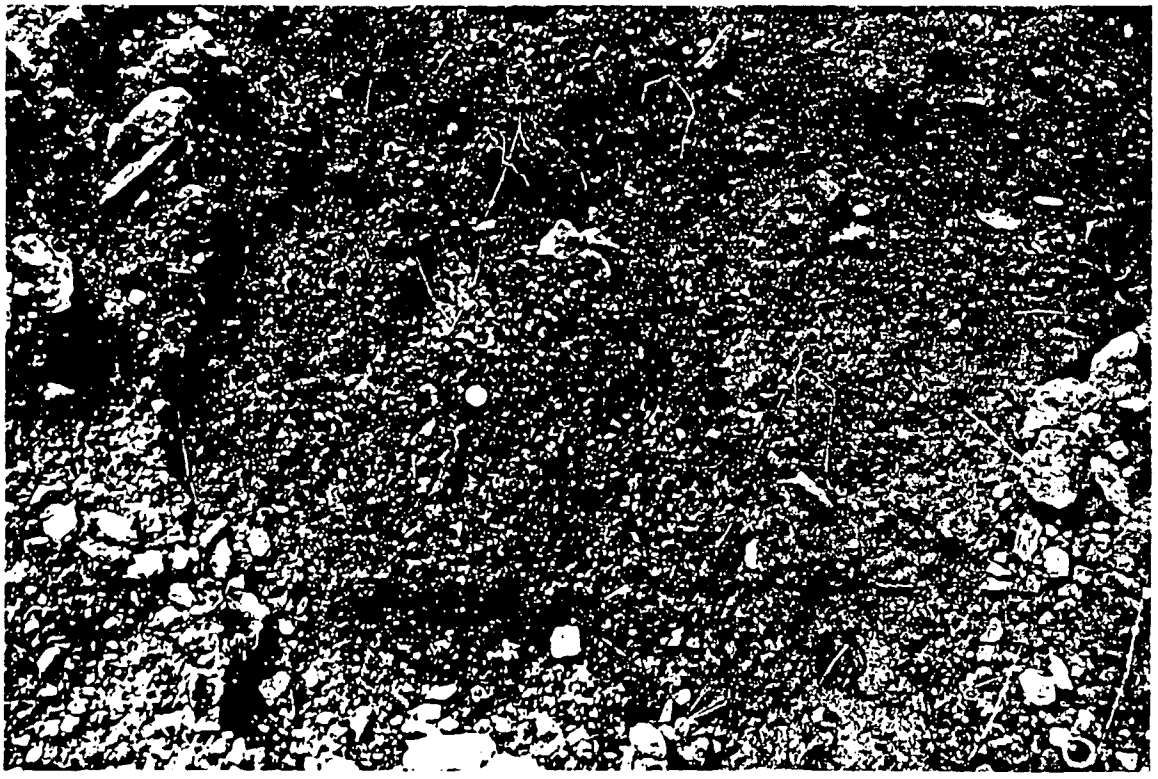

an environmental testing company
P.O. Box 12846
Research Triangle Park, North Carolina 27709
(919) 677-0090
FAX (919) 677-0427

June 7, 1991

John Stewart
Bain & Palmer, Inc.
2641-G Randleman Road
Greensboro, NC 27406

Reference IEA Report No.: 631194(0)
Project I.D.: 0121.001

Dear Mr. Stewart,

Transmitted herewith are the results of analyses on five samples submitted to our laboratory.

Please see the enclosed reports for your results.

Very truly yours,

IEA, Inc.

Linda F. Mitchell
Director, Technical Support Services

State Certification:

Alabama - #40210	New Jersey - #67719	South Carolina - #99021
Georgia - #816	Tennessee - #00296	North Carolina - #37720
Kansas - #E-158	Virginia - #00179	#84

Total Petroleum Hydrocarbon Analysis

IEA Sample No:	631-194-5	Date Sampled:	05-21-91
Client Sample No:	Well-1	Date Received:	05-22-91
Client Project No:	0121.001	Date Extracted:	05-29-91

Extraction (SW 846 - 3510) / GC-FID analysis (for #2 fuel oil,kerosene,varsol)
Date Analyzed: 05-30-91 Analyzed by: McCutcheon

The sample does not contain a petroleum hydrocarbon blend in the distillation range referenced above. The quantitation limit is 0.050 mg/L.

Comment:

==========

Purge and Trap (SW 846 - 5030) / GC-FID analysis (for gasoline only)
Date Analyzed: 05-28-91 Analyzed by: McCutcheon

The sample does not contain a petroleum hydrocarbon blend with a distillation range similar to gasoline. The quantitation limit is 0.050 mg/L.

Comment:

IEA LABORATORY RESULTS

IEA Project #: 631-194(0)
Client Name: Bain & Palmer, Inc.

Sample #	Client ID	Parameter	Results		Date Analyzed
		TOTAL METALS:			
5	GIR-Well-1	Arsenic	<0.005	mg/L	06/02/91
5	GIR-Well-1	Chromium	<0.03	mg/L	05/24/91
5	GIR-Well-1	Total Organic Carbon	<1.0	mg/L	06/03/91
5	GIR-Well-1	Total Organic Halide	<0.01	mg/L	05/28/91
1	GIR-TB-1	Oil & Grease (Gravimetric)	220	mg/kg	06/05/91
2	GIR-TB-2	Oil & Grease (Gravimetric)	1,100	mg/kg	06/05/91
3	GIR-TB-3	Oil & Grease (Gravimetric)	300	mg/kg	06/05/91

an environmental testing company
P.O. Box 12846
Research Triangle Park, North Carolina 27709
(919) 677-0090
FAX (919) 677-0427

June 3, 1991

JUN 1991
RECEIVED

John Stewart
Bain & Palmer, Inc.
2641-G Randleman Road
Greensboro, NC 27406

Reference IEA Report No.: 631194
Project I.D.: 0121.001

Dear Mr. Stewart,

Transmitted herewith are the results of analyses on five samples submitted to our laboratory.

Please see the enclosed reports for your results.

Very truly yours,

IEA, Inc.

Julie J. Spring
for

Linda F. Mitchell
Director, Technical Support Services

State Certification:

Alabama - #40210	New Jersey - #67719	South Carolina - #99021
Georgia - #816	Tennessee - #00296	North Carolina - #37720
Kansas - #E-158	Virginia - #00179	#84

Total Petroleum Hydrocarbon Analysis

IEA Sample No:	631-194-1	Date Sampled:	05-21-91
Client Sample No:	GIRTB-1	Date Received:	05-22-91
Client Project No:	0121.001	Date Extracted:	05-29-91

Extraction (SW 846 - 3550) / GC-FID analysis (for #2 fuel oil,kerosene,varsol)
Date Analyzed: 05-29-91 Analyzed by: McCutcheon

The sample does not contain a petroleum hydrocarbon blend in the distillation range referenced above. The quantitation limit is 2.0 mg/kg.

Comment:

Total Petroleum Hydrocarbon Analysis

IEA Sample No:	631-194-2	Date Sampled:	05-21-91
Client Sample No:	GIRTB-2	Date Received:	05-22-91
Client Project No:	0121.001	Date Extracted:	05-29-91

Extraction (SW 846 - 3550) / GC-FID analysis (for #2 fuel oil,kerosene,varsol)
Date Analyzed: 05-29-91 Analyzed by: McCutcheon

The sample does not contain a petroleum hydrocarbon blend in the distillation range referenced above. The quantitation limit is 2.0 mg/kg.

Comment:

Total Petroleum Hydrocarbon Analysis

IEA Sample No:	631-194-3	Date Sampled:	05-21-91
Client Sample No:	GIRTB-3	Date Received:	05-22-91
Client Project No:	0121.001	Date Extracted:	05-29-91

Extraction (SW 846 - 3550) / GC-FID analysis (for #2 fuel oil,kerosene,varsol)
Date Analyzed: 05-29-91 Analyzed by: McCutcheon

The sample does not contain a petroleum hydrocarbon blend in the distillation range referenced above. The quantitation limit is 2.0 mg/kg.

Comment:

iea
environmental testing company
3000 WESTON PKWY.
CARY, N.C. 27513

CHAIN OF CUSTODY RECORD

NO: 20703

REGULATORY JUSTIFICATION - PLEASE SPECIFY

☐ NPDES ☐ DRINKING ☐ RCRA ☐ OTHER _____

PROJECT # 0121.001

PROJECT NAME: Girmes

SAMPLERS: (SIGNATURE) John M. Stewart

REQUESTED PARAMETERS

SAMPLE I.D	DATE	TIME	COMP	GRAB	STATION LOCATION	# OF CONTAINERS	MATRIX SOIL	MATRIX WATER	TPH-GC 3550 only	Oil & Grease 9071 - Gravi.		TCLP Metals As & Cr		624		TPH-GC 3550 & 5030	TOX	TOC	Total Metals As & Cr		
GIR-TB-1	5/21/91	10:00		✓	SE end of USTs	2	✓		✓	✓											
GIR-TB-2	"	10:50		✓	SW end of USTs	2	✓		✓	✓											
GIR-TB-3	"	12:00		✓	NW end of USTs	2	✓		✓	✓											
GIR-SS-1	"	11:20	✓		Waste Treatment Plant	1	✓					✓									
GIR-SS-2	"	4:00	✓		Drainage - East side	1	✓					✓									
GIR-SS-2	"	4:15	✓	✓	"	3		✓						✓							
GIR-SS-2	"	4:20	✓		"	3	✓									✓					
Well 1	"	2:40		✓	Old Water Well	9		✓								✓	✓	✓	✓		

RELINQUISHED BY (SIGNATURE)	DATE	TIME	RECEIVED BY	DATE	TIME
John M. Stewart	5/22/91	9:20am			
RELINQUISHED BY (SIGNATURE)	DATE	TIME	RECEIVED FOR LAB BY	DATE	TIME
			Christine Oakley	5/22/91	1250

IEA QUOTE NO.	IEA RUSH NO.
PROJECT MANAGER (PLEASE PRINT)	**P.O. NO.**
John Stewart	

IEA REMARKS

IEA # 631-194 : TPH
631-194(V)

FIELD REMARKS

Regulated TCLP
GIR-SS-2 - Strong Petroleum odors

an environmental testing company
P.O. Box 12846
Research Triangle Park, North Carolina 27709
(919) 677-0090
FAX (919) 677-0427

June 20, 1991

John Stewart
Bain & Palmer, Inc.
2641-G Randleman Road
Greensboro, NC 27406

Reference IEA Report No.: 631194(1)
Project I.D.: 0121.001

Dear Mr. Stewart,

Transmitted herewith are the results of analyses on two samples submitted to our laboratory.

Please see the enclosed reports for your results.

Very truly yours,

IEA, Inc.

Linda F. Mitchell
Director, Technical Support Services

State Certification:

Alabama - #40210	New Jersey - #67719	South Carolina - #99021
Georgia - #816	Tennessee - #00296	North Carolina - #37720
Kansas - #E-158	Virginia - #00179	#84

Total Petroleum Hydrocarbon Analysis

IEA Sample No:	631-194-4	Date Sampled:	05-21-91
Client Sample No:	GIRSS-2	Date Received:	05-22-91
Client Project No:	0121.001	Date Extracted:	05-29-91

Extraction (SW 846 - 3550) / GC-FID analysis (for #2 fuel oil,kerosene,varsol)
Date Analyzed: 05-30-91 Analyzed by: McCutcheon

The sample contains a petroleum hydrocarbon blend with a distillation range similar to varsol. The concentration is 160 mg/kg. The quantitation limit is 40 mg/kg.

Comment:

Quantitation limit elevated due to extract dilution prior to analysis. Extract diluted due to the presence of target compounds.

==========

Purge and Trap (SW 846 - 5030) / GC-FID analysis (for gasoline only)
Date Analyzed: 05-28-91 Analyzed by: McCutcheon

The sample does not contain a petroleum hydrocarbon blend with a distillation range similar to gasoline. The quantitation limit is 2.0 mg/kg.

Comment:

GC/MS PURGEABLES
EPA 624 COMPOUND LIST

IEA Sample Number: 631-194(0)-4
Sample Identification: GIR-SS-2
Date Analyzed: 06/04/91 By: Griffin

Number	Compound	Quantitation Limit (ug/L)	Results Concentration (ug/L)
1	Benzene	5	BQL
2	Bromodichloromethane	5	BQL
3	Bromoform	5	BQL
4	Bromomethane	10	BQL
5	Carbon tetrachloride	5	BQL
6	Chlorobenzene	5	BQL
7	Chloroethane	10	BQL
8	2-Chloroethylvinyl ether	5	BQL
9	Chloroform	5	BQL
10	Chloromethane	10	BQL
11	Dibromochloromethane	5	BQL
12	1,2-Dichlorobenzene	5	BQL
13	1,3-Dichlorobenzene	5	BQL
14	1,4-Dichlorobenzene	5	BQL
15	1,1-Dichloroethane	5	BQL
16	1,2-Dichloroethane	5	BQL
17	1,1-Dichloroethene	5	BQL
18	1,2-Dichloroethene (total)	5	BQL
19	1,2-Dichloropropane	5	BQL
20	cis-1,3-Dichloropropene	5	BQL
21	trans-1,3-Dichloropropene	5	BQL
22	Ethylbenzene	5	BQL
23	Methylene chloride	5	BQL
24	1,1,2,2-Tetrachloroethane	5	BQL
25	Tetrachloroethene	5	BQL
26	Toluene	5	BQL
27	1,1,1-Trichloroethane	5	BQL
28	1,1,2-Trichloroethane	5	BQL
29	Trichloroethene	5	BQL
30	Trichlorofluoromethane	5	BQL
31	Vinyl Chloride	10	BQL

Comments:

BQL = Below Quantitation Limit

IEA LABORATORY RESULTS
TCLP REGULATED

IEA Project #: 631-194(1)
Client Name: Bain & Palmer, Inc.

Sample #	Client ID	Parameter	Regulatory Level		Results		Date Analyzed
		TCLP METALS:					
1	GIRSS-1	Arsenic	5.0	mg/L	<0.034	mg/L	06/15/91
2	GIRSS-2	Arsenic	5.0	mg/L	<0.030	mg/L	06/15/91
1	GIRSS-1	Chromium	5.0	mg/L	<0.21	mg/L	05/30/91
2	GIRSS-2	Chromium	5.0	mg/L	<0.21	mg/L	05/30/91

*The results reported have been corrected for matrix spike recovery as required in the TCLP Method (40 CFR, Part 261, Subpart C, Appendix I).

FORM TCLPM-R Rev. 051691

MATRIX SPIKE RECOVERY

IEA Project: 631-194(1)

Analyte	Analysis Date	Sample I.D. #	Sample Result (ppm)	% Recovery	Method
Arsenic	06/15/91	631-194(1)-1	<0.025	74	F
Chromium	05/30/91	631-194(1)-1	<0.15	70	P

P = Plasma
CV = Cold Vapor
F = Furnace

FORM MASPREC.WKQ Rev. 103190

MATRIX SPIKE RECOVERY

IEA Project: 631-194(1)

Analyte	Analysis Date	Sample I.D. #	Sample Result (ppm)	% Recovery	Method
Arsenic	06/15/91	631-194(1)-2	<0.025	82	F
Chromium	05/30/91	631-194(1)-2	<0.15	72	P

P = Plasma
CV = Cold Vapor
F = Furnace

FORM MASPREC.WKQ Rev. 103190

iea
a[illegible]viron[illegible]tal testing company
3000 WESTON PKWY.
CARY, N.C. 27513

C[illegible]AI[illegible] [illegible]STODY RECORD

NO: 20703

REGULA[illegible]IFICATION - PLEASE SPECIFY

☐ NPDES ☐ DRINKING [illegible] ☐ RCRA ☐ OTHER _____

PROJECT # 0121.001

PROJECT NAME: Girmes

SAMPLERS: (SIGNATURE) John M. Stewart

SAMPLE I.D.	DATE	TIME	COMP	GRAB	STATION LOCATION	# OF CONTAINERS	MATRIX SOIL	MATRIX WATER	TPH-GC 3550 only	Oil & Grease 9071-Grav.		TCLP Metals As & Cr		624		TPH-GC 3550 & 5030	TOX	TOC	Total Metals As & Cr		
GIR-TB-1	5/21/11	10:00		✓	SE end of USTs	2	✓		✓	✓											
GIR-TB-2	"	10.50		✓	SW end of USTs	2	✓		✓	✓											
GIR-TB-3	"	12:00		✓	NW end of USTs	2	✓		✓	✓											
GIR-SS-1	"	11:00	✓		Waste Treatment Plant	1	✓					✓									
GIR-SS-2	"	4:00	✓		Drainage - East side	1	✓					✓									
GIR-SS-2	"	4:15	✓	✓	"	3		✓						✓							
GIR-SS-2	"	4:20	✓		"	3	✓									✓					
Well 1	"	2:40		✓	Old Water Well	9		✓								✓	✓	✓	✓		

RELINQUISHED BY (SIGNATURE)	DATE	TIME	RECEIVED BY	DATE	TIME
John M. Stewart	5/22/11	9:00 am			
RELINQUISHED BY (SIGNATURE)	**DATE**	**TIME**	**RECEIVED FOR LAB BY**	**DATE**	**TIME**
			Christine [illegible]	5/22/11	1230

IEA QUOTE NO.	IEA RUSH NO.
PROJECT MANAGER (PLEASE PRINT)	**P.O. NO.**
John Stewart	

IEA REMARKS

IEA # 631-194 : TPH
631-194(V)

FIELD REMARKS

Regulated TCLP
GIR-SS-2 - Strong Petroleum odors

an environmental testing company
P.O. Box 12846
Research Triangle Park, North Carolina 27709
(919) 677-0090
FAX (919) 677-0427

August 5, 1991

John Stewart
Bain & Palmer, Inc.
2641-G Randleman Road
Greensboro, NC 27406

AUG 1991

Reference IEA Report No.: 631225
Project I.D.: 0121.001

Dear Mr. Stewart,

Transmitted herewith are the results of analyses on four samples submitted to our laboratory.

Please see the enclosed reports for your results.

Very truly yours,

IEA, Inc.

Linda F. Mitchell
Director, Technical Support Services

State Certification:

Alabama - #40210	New Jersey - #67719	South Carolina - #99021
Georgia - #816	Tennessee - #00296	North Carolina - #37720
Kansas - #E-158	Virginia - #00179	#84

Total Petroleum Hydrocarbon Analysis

IEA Sample No:	631-225-1	Date Sampled:	07-23-91
Client Sample No:	SS-1	Date Received:	07-25-91
Client Project No:	0121.001	Date Extracted:	07-29-91

Extraction (SW 846 - 3550) / GC-FID analysis (for #2 fuel oil,kerosene,varsol)
Date Analyzed: 07-31-91 Analyzed by: Correa

The sample contains a petroleum hydrocarbon blend with a distillation range similar to #2 fuel oil. The concentration is 160 mg/kg.
The quantitation limit is 2.0 mg/kg.

Comment:

Total Petroleum Hydrocarbon Analysis

IEA Sample No:	631-225-2	Date Sampled:	07-23-91
Client Sample No:	SS-2	Date Received:	07-25-91
Client Project No:	0121.001	Date Extracted:	07-29-91

Extraction (SW 846 - 3550) / GC-FID analysis (for #2 fuel oil,kerosene,varsol)
Date Analyzed: 07-31-91 Analyzed by: Correa

The sample does not contain a petroleum hydrocarbon blend in the distillation range referenced above. The quantitation limit is 2.0 mg/kg.

Comment:

Total Petroleum Hydrocarbon Analysis

IEA Sample No:	631-225-3	Date Sampled:	07-23-91
Client Sample No:	SS-3	Date Received:	07-25-91
Client Project No:	0121.001	Date Extracted:	07-29-91

Extraction (SW 846 - 3550) / GC-FID analysis (for #2 fuel oil,kerosene,varsol)
Date Analyzed: 07-31-91 Analyzed by: Correa

The sample does not contain a petroleum hydrocarbon blend in the distillation range referenced above. The quantitation limit is 2.0 mg/kg.

Comment:

Total Petroleum Hydrocarbon Analysis

IEA Sample No:	631-225-4	Date Sampled:	07-23-91
Client Sample No:	SS-4	Date Received:	07-25-91
Client Project No:	0121.001	Date Extracted:	07-29-91

Extraction (SW 846 - 3550) / GC-FID analysis (for #2 fuel oil,kerosene,varsol)
Date Analyzed: 07-31-91 Analyzed by: Correa

The sample does not contain a petroleum hydrocarbon blend in the distillation range referenced above. The quantitation limit is 2.0 mg/kg.

Comment:

The sample contains a petroleum hydrocarbon blend with a distillation range which exceeds the analytical range of the method. TPHC by IR is recommended for analysis of this sample.

an environmental testing company
P.O. Box 12846
Research Triangle Park, North Carolina 27709
(919) 677-0090
FAX (919) 677-0427

August 23, 1991

AUG 1991
RECEIVED

John Stewart
Bain & Palmer, Inc.
2641-G Randleman Road
Greensboro, NC 27406

Reference IEA Report No.: 631225(1)
Project I.D.: 0121.001

Dear Mr. Stewart,

Transmitted herewith are the results of analyses on four samples submitted to our laboratory.

Please see the enclosed reports for your results.

Very truly yours,

IEA, Inc.

Linda F. Mitchell
Director, Technical Support Services

State Certification:

Alabama - #40210	New Jersey - #67719	South Carolina - #99021
Georgia - #816	Tennessee - #00296	North Carolina - #37720
Kansas - #E-158	Virginia - #00179	#84

IEA LABORATORY RESULTS
TCLP REGULATED

IEA Project #: 631-225(1)
Client Name: Bain & Palmer, Inc.

Sample #	Client ID	Parameter	Regulatory Level		Results		Date Analyzed
		TCLP METALS:					
1	SS-1	Arsenic	5.0	mg/L	<0.029	mg/L	08/06/91
2	SS-2	Arsenic	5.0	mg/L	<0.029	mg/L	08/06/91
3	SS-3	Arsenic	5.0	mg/L	<0.027	mg/L	08/06/91
4	SS-4	Arsenic	5.0	mg/L	<0.028	mg/L	08/06/91
1	SS-1	Chromium	5.0	mg/L	<0.19	mg/L	08/13/91
2	SS-2	Chromium	5.0	mg/L	<0.17	mg/L	08/06/91
3	SS-3	Chromium	5.0	mg/L	<0.17	mg/L	08/06/91
4	SS-4	Chromium	5.0	mg/L	<0.17	mg/L	08/06/91

*The results reported have been corrected for matrix spike recovery as required in the TCLP Method (40 CFR, Part 261, Subpart C, Appendix I).

FORM TCLPM-R Rev. 051691

MATRIX SPIKE RECOVERY

IEA Project: 631-225(1)

Analyte	Analysis Date	Sample I.D. #	Sample Result (ppm)	% Recovery	Method
Arsenic	08/06/91	631-225(1)-1	<0.025	87	F
Chromium	08/13/91	631-225(1)-1	<0.15	78	P

P = Plasma
CV = Cold Vapor
F = Furnace

FORM MASPREC.WKQ Rev. 103190

MATRIX SPIKE RECOVERY

IEA Project: 631-225(1)

Analyte	Analysis Date	Sample I.D. #	Sample Result (ppm)	% Recovery	Method
Arsenic	08/06/91	631-225(1)-2	<0.025	86	F
Chromium	08/06/91	631-225(1)-2	<0.15	87	P

P = Plasma
CV = Cold Vapor
F = Furnace

FORM MASPREC.WKQ Rev. 103190

MATRIX SPIKE RECOVERY

IEA Project: 631-225(1)

Analyte	Analysis Date	Sample I.D. #	Sample Result (ppm)	% Recovery	Method
Arsenic	08/06/91	631-225(1)-3	<0.025	90	F
Chromium	08/06/91	631-225(1)-3	<0.15	90	P

P = Plasma
CV = Cold Vapor
F = Furnace

FORM MASPREC.WKQ Rev. 103190

MATRIX SPIKE RECOVERY

IEA Project: 631-225(1)

Analyte	Analysis Date	Sample I.D. #	Sample Result (ppm)	% Recovery	Method
Arsenic	08/06/91	631-225(1)-4	<0.025	88	F
Chromium	08/06/91	631-225(1)-4	<0.15	86	P

P = Plasma
CV = Cold Vapor
F = Furnace

FORM MASPREC.WKQ Rev. 103190

an environmental testing company
P.O. Box 12846
Research Triangle Park, North Carolina 27709
(919) 677-0090
FAX (919) 677-0427

August 8, 1991

AUG 1991
RECEIVED

John Stewart
Bain & Palmer, Inc.
2641-G Randleman Road
Greensboro, NC 27406

Reference IEA Report No.: 631225(0)
Project I.D.: 0121.001

Dear Mr. Stewart,

Transmitted herewith are the results of analyses on four samples submitted to our laboratory.

Please see the enclosed reports for your results.

Very truly yours,

IEA, Inc.

Linda F. Mitchell
Director, Technical Support Services

State Certification:

Alabama - #40210	New Jersey - #67719	South Carolina - #99021
Georgia - #816	Tennessee - #00296	North Carolina - #37720
Kansas - #E-158	Virginia - #00179	#84

IEA LABORATORY RESULTS

IEA Project #: 631-225(0)
Client Name: Bain & Palmer, Inc.

Sample #	Client ID	Parameter	Results		Date Analyzed
1	SS-1	Total Organic Halide	<0.10	mg/kg	07/31/91
2	SS-2	Total Organic Halide	<0.10	mg/kg	07/31/91
3	SS-3	Total Organic Halide	<0.10	mg/kg	07/31/91
4	SS-4	Total Organic Halide	<0.10	mg/kg	07/31/91
1	SS-1	Oil & Grease (Gravimetric)	260	mg/kg	08/06/91
2	SS-2	Oil & Grease (Gravimetric)	13	mg/kg	08/06/91
3	SS-3	Oil & Grease (Gravimetric)	18	mg/kg	08/06/91
4	SS-4	Oil & Grease (Gravimetric)	280	mg/kg	08/06/91

an environmental testing company
3000 WESTON PKWY.
CARY, N.C. 27513

CHAIN OF CUSTODY RECORD

NO: 21109

REGULATORY CLASSIFICATION - PLEASE SPECIFY

☐ NPDES ☐ DRINKING WATER ☐ RCRA ☐ OTHER _____

PROJECT #: 0121.001

PROJECT NAME: GIKMES

SAMPLERS (SIGNATURE): Chris Anderson

SAMPLE ID	DATE	TIME	COMP	GRAB	STATION LOCATION	# OF CONTAINERS	MATRIX SOIL	MATRIX WATER	TPH-GC 3550	Oil + Grease 9071 - Grav.	TCLP Metals As + Cr	TOX										
SS-1	7-23-91	1:00		✓	Trash Pile	2	✓		✓													
SS-1	"	"		✓	"	1	✓			✓		✓										
SS-1	"	"		✓	"	1	✓				✓											
SS-2	"	1:45		✓	"	2	✓		✓													
SS-2	"	"		✓	"	1	✓			✓		✓										
SS-2	"	4		✓	"	1	✓				✓											
SS-3	"	2:30		✓	"	2	✓		✓													
SS-3	"	"		✓	"	1	✓			✓		✓										
SS-3	"	"		✓	"	1	✓				✓											
SS-4	"	3:15		✓	"	2	✓		✓													
SS-4	"	"		✓	"	1	✓			✓		✓										

REQUESTED PARAMETERS

ITA 631-2285
285-0
285-1

RELINQUISHED BY (SIGNATURE)	DATE	TIME	RECEIVED BY	DATE	TIME
John M. Stewart	7/25/91	9:00			
RELINQUISHED BY (SIGNATURE)	DATE	TIME	RECEIVED FOR LAB BY	DATE	TIME
			Bill Scott	7/25/91	12:00

IEA QUOTE NO.	IEA RUSH NO.
PROJECT MANAGER (PLEASE PRINT)	**P.O. NO.**
JOHN Stewart	

IEA REMARKS

FIELD REMARKS

Population TAID

an environmental testing company
3000 WESTON PKWY.
CARY, N.C. 27513

CHAIN OF CUSTODY RECORD

NO: 21108

REGULATORY CLASSIFICATION - PLEASE SPECIFY

☐ NPDES ☐ DRINKING WATER ☐ RCRA ☐ OTHER _____

PROJECT #: 0121.001

PROJECT NAME: Girmes

SAMPLERS (SIGNATURE): Chris Henderson

SAMPLE I.D.	DATE	TIME	COMP	GRAB	STATION LOCATION	# OF CONTAINERS	MATRIX SOIL	MATRIX WATER	TCLP Metals As + Cd											
SS-4	7-23-91	3:15		✓	Trash Pile	1	✓		✓											

REQUESTED PARAMETERS

631-225
225-0
225-1

RELINQUISHED BY (SIGNATURE)	DATE	TIME	RECEIVED BY	DATE	TIME
John M. Stewart	9/25/91	9:00			
RELINQUISHED BY (SIGNATURE)	DATE	TIME	RECEIVED FOR LAB BY	DATE	TIME
			Bill Scott	7/25/91	12:00

IEA QUOTE NO.	IEA RUSH NO.
~~No~~	
PROJECT MANAGER (PLEASE PRINT)	**P.O. NO.**
JOHN Stewart	

IEA REMARKS

FIELD REMARKS

Regulated TRID

an environmental testing company
P.O. Box 12846
Research Triangle Park, North Carolina 27709
(919) 677-0090
FAX (919) 677-0427

August 28, 1991

John Stewart
Bain & Palmer, Inc.
2641-G Randleman Road
Greensboro, NC 27406

Reference IEA Report No.: 631241
Project I.D.: 0121.001

Dear Mr. Stewart,

Transmitted herewith are the results of analyses on one sample submitted to our laboratory.

Please see the enclosed reports for your results.

Very truly yours,

IEA, Inc.

Linda F. Mitchell
Director, Technical Support Services

State Certification:

Alabama - #40210	New Jersey - #67719	South Carolina - #99021
Georgia - #816	Tennessee - #00296	North Carolina - #37720
Kansas - #E-158	Virginia - #00179	#84

Total Petroleum Hydrocarbon Analysis

IEA Sample No:	631-241-1	Date Sampled:	08-07-91
Client Sample No:	GS-1	Date Received:	08-08-91
Client Project No:	0121.001	Date Extracted:	08-12-91

Extraction (SW 846 - 3550) / GC-FID analysis (for #2 fuel oil,kerosene,varsol)
Date Analyzed: 08-16-91 Analyzed by: Correa

The sample contains a petroleum hydrocarbon blend with a distillation range similar to varsol. The concentration is 430 mg/kg. The quantitation limit is 40 mg/kg.

Comment:

Quantitation limit elevated due to extract dilution prior to analysis. Extract diluted due to the presence of target compounds.

==========

Purge and Trap (SW 846 - 5030) / GC-FID analysis (for gasoline only)
Date Analyzed: 08-15-91 Analyzed by: Correa

The sample does not contain a petroleum hydrocarbon blend with a distillation range similar to gasoline. The quantitation limit is 2.0 mg/kg.

Comment:

Total Petroleum Hydrocarbon Analysis

IEA Sample No:	631-241	Date Sampled:	N/A
Client Sample No:	QC blank	Date Received:	N/A
Client Project No:	0121.001	Date Extracted:	08-12-91

Extraction (SW 846 - 3550) / GC-FID analysis (for #2 fuel oil,kerosene,varsol)
Date Analyzed: 08-16-91 Analyzed by: Correa

The sample does not contain a petroleum hydrocarbon blend in the distillation range referenced above. The quantitation limit is 2.0 mg/kg.

Comment:

N/A= Not applicable

==========

Purge and Trap (SW 846 - 5030) / GC-FID analysis (for gasoline only)
Date Analyzed: 08-15-91 Analyzed by: Correa

The sample does not contain a petroleum hydrocarbon blend with a distillation range similar to gasoline. The quantitation limit is 2.0 mg/kg.

Comment:

N/A= Not applicable

ANALYSTS, INC.
3000 WESTON PKWY.
CARY, N.C. 27513

CHAIN OF CUSTODY RECORD

NO: 13752

REGULATORY CLASSIFICATION - PLEASE SPECIFY

☐ NPDES ☐ DRINKING WATER ☐ RCRA ☐ OTHER _____

PROJECT #	PROJECT NAME
0121.001	Grimes

SAMPLERS: *(SIGNATURE)* John M. Stewart

SAMPLE I.D.	DATE	TIME	COMP	GRAB	STATION LOCATION	# OF CONTAINERS	MATRIX SOIL	MATRIX WATER	TPH 3550/5030
GS-1	8-7-91	1410		✓	Base of Slope	1	✓		✓
~~GS-2~~	~~8-7-91~~	~~1440~~		✓	"	1	✓		✓

RELINQUISHED BY *(SIGNATURE)*	DATE	TIME	RECEIVED BY	DATE	TIME
John M. Stewart	8/8/91	9:30			
RELINQUISHED BY *(SIGNATURE)*	**DATE**	**TIME**	**RECEIVED FOR LAB BY**	**DATE**	**TIME**
			Christine Deckel	8/8/91	1330

IEA QUOTE NO.	IEA RUSH NO.
PROJECT MANAGER (PLEASE PRINT)	**P.O. NO.**
John Stewart	

IEA REMARKS

FIELD REMARKS

Very Strong Petroleum Odors

an environmental testing company
P.O. Box 12846
Research Triangle Park, North Carolina 27709
(919) 677-0090
FAX (919) 677-0427

November 21, 1991

Randy Cavallier
Bain & Palmer, Inc.
2641-G Randleman Road
Greensboro, NC 27406

IEA Project No.: 631308
IEA Reference No.: A9111215
Client Project I.D.: 0121.001

Dear Mr. Cavallier,

Transmitted herewith are the results of analyses on five samples submitted to our laboratory.

Please see the enclosed reports for your results.

Very truly yours,

IEA, Inc.

Linda F. Mitchell
Director, Technical Support Services

State Certification:

Alabama - #40210
Georgia - #816
New Jersey - #67719
Tennessee - #00296
Virginia - #00179
South Carolina - #99021
North Carolina - #37720
#84

Total Petroleum Hydrocarbon Analysis

IEA Sample No:	631-308-1	Date Sampled:	11-07-91
Client Sample No:	SS-1	Date Received:	11-12-91
Client Project No:	0121.001	Date Extracted:	11-18-91

Extraction (SW 846 - 3550) / GC-FID analysis (for #2 fuel oil,kerosene,varsol)
Date Analyzed: 11-18-91 Analyzed by: Correa

The sample does not contain a petroleum hydrocarbon blend in the distillation range referenced above. The quantitation limit is 2.0 mg/kg.

Comment:

==========

Purge and Trap (SW 846 - 5030) / GC-FID analysis (for gasoline only)
Date Analyzed: 11-17-91 Analyzed by: Correa

The sample does not contain a petroleum hydrocarbon blend with a distillation range similar to gasoline. The quantitation limit is 2.0 mg/kg.

Comment:

Total Petroleum Hydrocarbon Analysis

IEA Sample No:	631-308-2	Date Sampled:	11-07-91
Client Sample No:	SS-2	Date Received:	11-12-91
Client Project No:	0121.001	Date Extracted:	11-18-91

Extraction (SW 846 - 3550) / GC-FID analysis (for #2 fuel oil,kerosene,varsol)
Date Analyzed: 11-19-91 Analyzed by: Correa

The sample does not contain a petroleum hydrocarbon blend in the distillation range referenced above. The quantitation limit is 2.0 mg/kg.

Comment:

==========

Purge and Trap (SW 846 - 5030) / GC-FID analysis (for gasoline only)
Date Analyzed: 11-17-91 Analyzed by: Correa

The sample does not contain a petroleum hydrocarbon blend with a distillation range similar to gasoline. The quantitation limit is 2.0 mg/kg.

Comment:

Total Petroleum Hydrocarbon Analysis

IEA Sample No:	631-308-3	Date Sampled:	11-08-91
Client Sample No:	SS-3	Date Received:	11-12-91
Client Project No:	0121.001	Date Extracted:	11-18-91

Extraction (SW 846 - 3550) / GC-FID analysis (for #2 fuel oil,kerosene,varsol)
Date Analyzed: 11-19-91 Analyzed by: Correa

The sample does not contain a petroleum hydrocarbon blend in the distillation range referenced above. The quantitation limit is 2.0 mg/kg.

Comment:

==========

Purge and Trap (SW 846 - 5030) / GC-FID analysis (for gasoline only)
Date Analyzed: 11-17-91 Analyzed by: Correa

The sample does not contain a petroleum hydrocarbon blend with a distillation range similar to gasoline. The quantitation limit is 2.0 mg/kg.

Comment:

Total Petroleum Hydrocarbon Analysis

IEA Sample No:	631-308-4	Date Sampled:	11-08-91
Client Sample No:	SS-4	Date Received:	11-12-91
Client Project No:	0121.001	Date Extracted:	11-18-91

Extraction (SW 846 - 3550) / GC-FID analysis (for #2 fuel oil,kerosene,varsol)
Date Analyzed: 11-19-91 Analyzed by: Correa

The sample does not contain a petroleum hydrocarbon blend in the distillation range referenced above. The quantitation limit is 2.0 mg/kg.

Comment:

==========

Purge and Trap (SW 846 - 5030) / GC-FID analysis (for gasoline only)
Date Analyzed: 11-17-91 Analyzed by: Correa

The sample does not contain a petroleum hydrocarbon blend with a distillation range similar to gasoline. The quantitation limit is 2.0 mg/kg.

Comment:

Total Petroleum Hydrocarbon Analysis

IEA Sample No:	631-308-5	Date Sampled:	11-08-91
Client Sample No:	SS-5	Date Received:	11-12-91
Client Project No:	0121.001	Date Extracted:	11-18-91

Extraction (SW 846 - 3550) / GC-FID analysis (for #2 fuel oil,kerosene,varsol)
Date Analyzed: 11-18-91 Analyzed by: Correa

The sample does not contain a petroleum hydrocarbon blend in the distillation range referenced above. The quantitation limit is 2.0 mg/kg.

Comment:

==========

Purge and Trap (SW 846 - 5030) / GC-FID analysis (for gasoline only)
Date Analyzed: 11-17-91 Analyzed by: Correa

The sample does not contain a petroleum hydrocarbon blend with a distillation range similar to gasoline. The quantitation limit is 2.0 mg/kg.

Comment:

Total Petroleum Hydrocarbon Analysis

IEA Sample No:	631-308	Date Sampled:	N/A
Client Sample No:	QC Blank	Date Received:	N/A
Client Project No:	0121.001	Date Extracted:	11-18-91

Extraction (SW 846 - 3550) / GC-FID analysis (for #2 fuel oil,kerosene,varsol)
Date Analyzed: 11-18-91 Analyzed by: Correa

The sample does not contain a petroleum hydrocarbon blend in the distillation range referenced above. The quantitation limit is 2.0 mg/kg.

Comment:
N/A=Not applicable

==========

Purge and Trap (SW 846 - 5030) / GC-FID analysis (for gasoline only)
Date Analyzed: 11-17-91 Analyzed by: Correa

The sample does not contain a petroleum hydrocarbon blend with a distillation range similar to gasoline. The quantitation limit is 2.0 mg/kg.

Comment:
N/A=Not applicable

B[illegible] AL[illegible] B[illegible] C[illegible] CH[illegible] C[illegible] CU[illegible] D[illegible]

Environmental Consultants

RECORD

Project Name Girmes

Project Number 0121.001

SAMPLE IDENTIFICATION / ANALYSES REQUESTED

Sample No.	Lab ID No.	Description	Matrix	Date & Time Collected	Container	Preservative		TPH 6C						
SS-1		Bottom	S	11/7 10:5	250ml	ice								
"		Excavator	"	"	2-40ml	"								
SS-2			"	11/7 4:30	250ml	"								
"			"	"	2-40ml	"								
SS-3			"	11/8 11:00	250ml	"								
"			"	" "	2-40ml	"								
SS-4			"	" 2:10	250ml	"								
"			"	" "	2-40ml	"								
SS-5			"	" 4:15	250ml	"								
"			"	" "	2-40ml	"								

Matrix:

S – soil DS – drum solids

W – water DL – drum liquids

O – oil X – other _____

Special Instructions: IEA #631-308

Items/Reason	Relinquished By	Received By	Date	Time
All/Shipping	[illegible]		11/11	8:00
		Cl Kuhn	11/12/91	1300

Items/Reason	Relinquished By	Received By	Date	Time

an environmental testing company
P.O. Box 12846
Research Triangle Park, North Carolina 27709
(919) 677-0090
FAX (919) 677-0427

December 9, 1991

Randy Cavallier
Bain & Palmer, Inc.
2641-G Randleman Road
Greensboro, NC 27406

IEA Project No.: 631309(0)
IEA Reference No.: A9111224
Client Project I.D.: 0121.001

Dear Mr. Cavallier,

Transmitted herewith are the results of analyses on one sample submitted to our laboratory.

Please see the enclosed reports for your results.

Very truly yours,

IEA, Inc.

Linda F. Mitchell
Director, Technical Support Services

State Certification:

Alabama - #40210
Georgia - #816
New Jersey - #67719
Tennessee - #00296
Virginia - #00179
South Carolina - #99021
North Carolina - #37720
#84

IEA LABORATORY RESULTS

IEA Project #: 631-309(0)
Client Name: Bain & Palmer, Inc.

Sample #	Client ID	Parameter	Results		Date Analyzed
1	GIRSP-1	Ignitability	>200	Degrees F	11/20/91
1	GIRSP-1	pH	5.9		11/15/91
1	GIRSP-1	Total Organic Halide	0.25	mg/kg	11/19/91
1	GIRSP-1	% Moisture	14		11/19/91

IEA LABORATORY RESULTS

IEA Project #: 631-309(0)
Client Name: Bain & Palmer, Inc.

Client ID	Parameter	Results		Date Analyzed
QC Blank	Total Organic Halide	<0.01	mg/kg	11/19/91
QC Blank	% Moisture	<10		11/19/91

PURGEABLE AROMATICS
SW-846 METHOD 8020 COMPOUNDS

IEA Sample Number:	631-309(0)-1	Date Received:	11/11/91
Client Name:	Bain & Palmer	Date Sampled:	11/08/91
Client Project ID:	0121.001	Date Analyzed:	11/15/91
Sample Identification:	GIRSP-1	Analysis By:	Miller
Matrix	Soil	Dilution Factor:	5

Number	Compound	Quantitation Limit (ug/kg)	Results Concentration (ug/kg)
1	Benzene	1.0	BQL
2	Ethylbenzene	1.0	180 *
3	Toluene	1.0	BQL
4	Xylenes	1.0	340

Comments:
Sample specific quantitation limits may be calculated by multiplying the quantitation limit by the dilution factor.
BQL = Below Quantitation Limit
Quantitation limit elevated due to sample dilution prior to analysis.
Sample diluted due to high concentration of target compounds present.
*GC/MS confirmation indicates possible coelution with non-target compound with this method.

FORM 8020 REV. 101091

PURGEABLE AROMATICS
SW-846 METHOD 8020 COMPOUNDS

IEA Sample Number:	631-309(0)	Date Received:	N/A
Client Name:	Bain & Palmer	Date Sampled:	N/A
Client Project ID:	0121.001	Date Analyzed:	11/15/91
Sample Identification:	QC Blank	Analysis By:	Miller
Matrix	Solid	Dilution Factor:	1

Number	Compound	Quantitation Limit (ug/kg)	Results Concentration (ug/kg)
1	Benzene	1.0	BQL
2	Chlorobenzene	1.0	BQL
3	1,2-Dichlorobenzene	1.0	BQL
4	1,3-Dichlorobenzene	1.0	BQL
5	1,4-Dichlorobenzene	1.0	BQL
6	Ethylbenzene	1.0	BQL
7	Toluene	1.0	BQL
8	Xylenes	1.0	BQL

Comments:
Sample specific quantitation limits may be calculated by multiplying the quantitation limit by the dilution factor.
BQL = Below Quantitation Limit
N/A = Not Applicable

FORM 8020 REV. 101091

GC/MS PURGEABLES
SW-846 METHOD 8240

IEA Sample Number:	631-309(0)-1	Date Received:	11/11/91
Client Name:	Bain & Palmer	Date Sampled:	11/08/91
Client Project ID:	0121.001	Date Analyzed:	11/19/91
Sample Identification:	GIRSP-1	Analysis By:	Stephenson
Matrix:	Soil	Dilution Factor:	1

Number	Compound	Quantitation Limit (ug/kg)	Results Concentration (ug/kg)
1	Acetone	100	120
2	Benzene	5	BQL
3	Bromodichloromethane	5	BQL
4	Bromoform	5	BQL
5	Bromomethane	10	BQL
6	2-Butanone	100	BQL
7	Carbon disulfide	5	BQL
8	Carbon tetrachloride	5	BQL
9	Chlorobenzene	5	BQL
10	Dibromochloromethane	5	BQL
11	Chloroethane	10	BQL
12	2-Chloroethylvinyl ether	10	BQL
13	Chloroform	5	BQL
14	Chloromethane	10	BQL
15	1,1-Dichloroethane	5	BQL
16	1,2-Dichloroethane	5	BQL
17	1,1-Dichloroethene	5	BQL
18	1,2-Dichloroethene (total)	5	BQL
19	1,2-Dichloropropane	5	BQL
20	cis-1,3-Dichloropropene	5	BQL
21	trans-1,3-Dichloropropene	5	BQL
22	Ethylbenzene	5	31
23	2-Hexanone	50	BQL
24	Methylene chloride	5	BQL
25	4-Methyl-2-pentanone	50	BQL
26	Styrene	5	BQL
27	1,1,2,2-Tetrachloroethane	5	BQL
28	Tetrachloroethene	5	BQL
29	Toluene	5	BQL
30	1,1,1-Trichloroethane	5	BQL
31	1,1,2-Trichloroethane	5	BQL
32	Trichloroethene	5	BQL
33	Vinyl acetate	50	BQL
34	Vinyl chloride	10	BQL
35	Xylenes (total)	5	510

Comments:
Sample specific quantitation limits may be calculated by multiplying the quantitation limit by the dilution factor.
BQL = Below Quantitation Limit

GC/MS PURGEABLES
SW-846 METHOD 8240

IEA Sample Number:	631-309(0)	Date Received:	N/A
Client Name:	Bain & Palmer	Date Sampled:	N/A
Client Project ID:	0121.001	Date Analyzed:	11/18/91
Sample Identification:	QC Blank (VBLK54)	Analysis By:	Stephenson
Matrix:	Solid	Dilution Factor:	1

Number	Compound	Quantitation Limit (ug/kg)	Results Concentration (ug/kg)
1	Acetone	100	BQL
2	Benzene	5	BQL
3	Bromodichloromethane	5	BQL
4	Bromoform	5	BQL
5	Bromomethane	10	BQL
6	2-Butanone	100	BQL
7	Carbon disulfide	5	BQL
8	Carbon tetrachloride	5	BQL
9	Chlorobenzene	5	BQL
10	Dibromochloromethane	5	BQL
11	Chloroethane	10	BQL
12	2-Chloroethylvinyl ether	10	BQL
13	Chloroform	5	BQL
14	Chloromethane	10	BQL
15	1,1-Dichloroethane	5	BQL
16	1,2-Dichloroethane	5	BQL
17	1,1-Dichloroethene	5	BQL
18	1,2-Dichloroethene (total)	5	BQL
19	1,2-Dichloropropane	5	BQL
20	cis-1,3-Dichloropropene	5	BQL
21	trans-1,3-Dichloropropene	5	BQL
22	Ethylbenzene	5	BQL
23	2-Hexanone	50	BQL
24	Methylene chloride	5	BQL
25	4-Methyl-2-pentanone	50	BQL
26	Styrene	5	BQL
27	1,1,2,2-Tetrachloroethane	5	BQL
28	Tetrachloroethene	5	BQL
29	Toluene	5	BQL
30	1,1,1-Trichloroethane	5	BQL
31	1,1,2-Trichloroethane	5	BQL
32	Trichloroethene	5	BQL
33	Vinyl acetate	50	BQL
34	Vinyl chloride	10	BQL
35	Xylenes (total)	5	BQL

Comments:
Sample specific quantitation limits may be calculated by multiplying the quantitation limit by the dilution factor.
BQL = Below Quantitation Limit
N/A = Not Applicable
Filename: 1118e03

BASE/NEUTRAL EXTRACTABLES
SW-846 METHOD 8270

IEA Sample Number:	631-309(0)-1	Date Received:	11/11/91
Client Name:	Bain & Palmer	Date Sampled:	11/08/91
Client Project ID:	0121.001	Date Extracted:	11/15/91
Sample Identification:	GIRSP-1	Date Analyzed:	11/25/91
Matrix:	Soil	Analysis By:	Schemmer
	1	Dilution Factor:	1

Number	Compound	Quantitation Limit (ug/kg)	Results Concentration (ug/kg)
1	Acenaphthene	200	BQL
2	Acenaphthylene	200	BQL
3	Anthracene	200	BQL
4	Benzo(a)anthracene	200	BQL
5	Benzo(b)fluoranthene	200	BQL
6	Benzo(k)fluoranthene	200	BQL
7	Benzo(g,h,i)perylene	200	BQL
8	Benzo(a)pyrene	200	BQL
9	Benzyl alcohol	400	BQL
10	bis(2-Chloroethoxy)methane	200	BQL
11	bis(2-Chloroethyl)ether	200	BQL
12	bis(2-Chloroisopropyl)ether	200	BQL
13	bis(2-Ethylhexyl)phthalate	200	BQL
14	4-Bromophenyl phenyl ether	200	BQL
15	Benzyl butyl phthalate	200	BQL
16	4-Chloroaniline	400	BQL
17	2-Chloronaphthalene	200	BQL
18	4-Chlorophenyl phenyl ether	200	BQL
19	Chrysene	200	BQL
20	Dibenzo(a,h)anthracene	200	BQL
21	Dibenzofuran	200	BQL
22	Di-n-butylphthalate	200	250
23	1,3-Dichlorobenzene	200	BQL
24	1,4-Dichlorobenzene	200	BQL
25	1,2-Dichlorobenzene	200	BQL
26	3,3'-Dichlorobenzidine	400	BQL
27	Diethyl phthalate	200	BQL
28	Dimethyl phthalate	200	BQL
29	2,4-Dinitrotoluene	200	BQL
30	2,6-Dinitrotoluene	200	BQL
31	Di-n-octylphthalate	200	BQL
32	Fluoranthene	200	BQL
33	Fluorene	200	BQL
34	Hexachlorobenzene	200	BQL
35	Hexachlorobutadiene	200	BQL
36	Hexachlorocyclopentadiene	200	BQL
37	Hexachloroethane	200	BQL
38	Indeno(1,2,3-cd)pyrene	200	BQL
39	Isophorone	200	BQL

BASE/NEUTRAL EXTRACTABLES
SW-846 METHOD 8270

IEA Sample Number:	631-309(0)-1	Date Received:	11/11/91
Client Name:	Bain & Palmer	Date Sampled:	11/08/91
Client Project ID:	0121.001	Date Extracted:	11/15/91
Sample Identification:	GIRSP-1	Date Analyzed:	11/25/91
Matrix:	Soil	Analysis By:	Schemmer
	1	Dilution Factor:	1

Number	Compound	Quantitation Limit (ug/kg)	Results Concentration (ug/kg)
40	2-Methylnaphthalene	200	BQL
41	Naphthalene	200	BQL
42	2-Nitroaniline	1000	BQL
43	3-Nitroaniline	1000	BQL
44	4-Nitroaniline	1000	BQL
45	Nitrobenzene	200	BQL
46	N-Nitroso-di-n-propylamine	200	BQL
47	N-Nitrosodiphenylamine	200	BQL
48	Phenanthrene	200	BQL
49	Pyrene	200	BQL
50	1,2,4-Trichlorobenzene	200	BQL

Comments:
Sample specific quantitation limits may be calculated by multiplying the quantitation limit by the dilution factor.
BQL = Below Quantitation Limit

BASE/NEUTRAL EXTRACTABLES
SW-846 METHOD 8270

IEA Sample Number:	631-309(0)	Date Received:	N/A
Client Name:	Bain & Palmer	Date Sampled:	N/A
Client Project ID:	0121.001	Date Extracted:	11/15/91
Sample Identification:	QC Blank (SVB500)	Date Analyzed:	12/03/91
Matrix:	Solid	Analysis By:	Mace
	1	Dilution Factor:	1

Number	Compound	Quantitation Limit (ug/kg)	Results Concentration (ug/kg)
1	Acenaphthene	200	BQL
2	Acenaphthylene	200	BQL
3	Anthracene	200	BQL
4	Benzo(a)anthracene	200	BQL
5	Benzo(b)fluoranthene	200	BQL
6	Benzo(k)fluoranthene	200	BQL
7	Benzo(g,h,i)perylene	200	BQL
8	Benzo(a)pyrene	200	BQL
9	Benzyl alcohol	400	BQL
10	bis(2-Chloroethoxy)methane	200	BQL
11	bis(2-Chloroethyl)ether	200	BQL
12	bis(2-Chloroisopropyl)ether	200	BQL
13	bis(2-Ethylhexyl)phthalate	200	BQL
14	4-Bromophenyl phenyl ether	200	BQL
15	Benzyl butyl phthalate	200	BQL
16	4-Chloroaniline	400	BQL
17	2-Chloronaphthalene	200	BQL
18	4-Chlorophenyl phenyl ether	200	BQL
19	Chrysene	200	BQL
20	Dibenzo(a,h)anthracene	200	BQL
21	Dibenzofuran	200	BQL
22	Di-n-butylphthalate	200	BQL
23	1,3-Dichlorobenzene	200	BQL
24	1,4-Dichlorobenzene	200	BQL
25	1,2-Dichlorobenzene	200	BQL
26	3,3'-Dichlorobenzidine	400	BQL
27	Diethyl phthalate	200	BQL
28	Dimethyl phthalate	200	BQL
29	2,4-Dinitrotoluene	200	BQL
30	2,6-Dinitrotoluene	200	BQL
31	Di-n-octylphthalate	200	BQL
32	Fluoranthene	200	BQL
33	Fluorene	200	BQL
34	Hexachlorobenzene	200	BQL
35	Hexachlorobutadiene	200	BQL
36	Hexachlorocyclopentadiene	200	BQL
37	Hexachloroethane	200	BQL
38	Indeno(1,2,3-cd)pyrene	200	BQL
39	Isophorone	200	BQL

BASE/NEUTRAL EXTRACTABLES
SW-846 METHOD 8270

IEA Sample Number:	631-309(0)	Date Received:	N/A
Client Name:	Bain & Palmer	Date Sampled:	N/A
Client Project ID:	0121.001	Date Extracted:	11/15/91
Sample Identification:	QC Blank (SVB500)	Date Analyzed:	12/03/91
Matrix:	Solid	Analysis By:	Mace
	1	Dilution Factor:	1

Number	Compound	Quantitation Limit (ug/kg)	Results Concentration (ug/kg)
40	2-Methylnaphthalene	200	BQL
41	Naphthalene	200	BQL
42	2-Nitroaniline	1000	BQL
43	3-Nitroaniline	1000	BQL
44	4-Nitroaniline	1000	BQL
45	Nitrobenzene	200	BQL
46	N-Nitroso-di-n-propylamine	200	BQL
47	N-Nitrosodiphenylamine	200	BQL
48	Phenanthrene	200	BQL
49	Pyrene	200	BQL
50	1,2,4-Trichlorobenzene	200	BQL

Comments:
Sample specific quantitation limits may be calculated by multiplying the quantitation limit by the dilution factor.
BQL = Below Quantitation Limit
N/A = Not Applicable

PESTICIDES / PCBs
SW-846 METHOD 8080

IEA Sample Number:	631-309(0)-1	Date Received:	11/11/91
Client Name:	Bain & Palmer	Date Sampled:	11/08/91
Client Project ID:	0121.001	Date Extracted:	11/15/91
Sample Identification:	GIRSP-1	Date Analyzed:	11/20/91
Matrix:	Soil	Analysis By:	Travis
Moisture Correction Factor:	1.2	Dilution Factor:	10

Number	Compound	Quantitation Limit (ug/kg)	Results Concentration (ug/kg)
1	alpha-BHC	8.0	BQL
2	beta-BHC	8.0	BQL
3	delta-BHC	8.0	BQL
4	gamma-BHC (Lindane)	8.0	BQL
5	Heptachlor	8.0	BQL
6	Aldrin	8.0	BQL
7	Heptachlor epoxide	8.0	BQL
8	Endosulfan I	8.0	BQL
9	Dieldrin	16	BQL
10	4,4'-DDE	16	BQL
11	Endrin	16	BQL
12	Endosulfan II	16	BQL
13	4,4'-DDD	16	BQL
14	Endosulfan sulfate	16	BQL
15	4,4'-DDT	16	BQL
16	Methoxychlor	80	BQL
17	Toxaphene	160	BQL
18	Aroclor 1016	80	BQL
19	Aroclor 1221	80	BQL
20	Aroclor 1232	80	BQL
21	Aroclor 1242	80	BQL
22	Aroclor 1248	80	BQL
23	Aroclor 1254	160	5,400
24	Aroclor 1260	160	BQL
25	Chlordane (technical)	80	BQL
26	Endrin aldehyde	16	BQL

Additional Compounds:

27	Endrin ketone	16	BQL

Comments:
Sample specific quantitation limits may be calculated by multiplying the quantitation limit by the dilution factor.
BQL = Below Quantitation Limit
Quantitation limit elevated due to sample dilution prior to analysis.
Sample diluted due to high concentration of target compounds present.
Adjust quantitation limit for % moisture.
Target compound concentration adjusted for % moisture.
FORM 8080 Rev. 101891

PESTICIDES / PCBs
SW-846 METHOD 8080

IEA Sample Number:	631-309(0)	Date Received:	N/A
Client Name:	Bain & Palmer	Date Sampled:	N/A
Client Project ID:	0121.001	Date Extracted:	11/15/91
Sample Identification:	QC Blank (PB400)	Date Analyzed:	11/20/91
Matrix:	Solid	Analysis By:	Travis
Moisture Correction Factor:	1	Dilution Factor:	1

Number	Compound	Quantitation Limit (ug/kg)	Results Concentration (ug/kg)
1	alpha-BHC	8.0	BQL
2	beta-BHC	8.0	BQL
3	delta-BHC	8.0	BQL
4	gamma-BHC (Lindane)	8.0	BQL
5	Heptachlor	8.0	BQL
6	Aldrin	8.0	BQL
7	Heptachlor epoxide	8.0	BQL
8	Endosulfan I	8.0	BQL
9	Dieldrin	16	BQL
10	4,4'-DDE	16	BQL
11	Endrin	16	BQL
12	Endosulfan II	16	BQL
13	4,4'-DDD	16	BQL
14	Endosulfan sulfate	16	BQL
15	4,4'-DDT	16	BQL
16	Methoxychlor	80	BQL
17	Toxaphene	160	BQL
18	Aroclor 1016	80	BQL
19	Aroclor 1221	80	BQL
20	Aroclor 1232	80	BQL
21	Aroclor 1242	80	BQL
22	Aroclor 1248	80	BQL
23	Aroclor 1254	160	BQL
24	Aroclor 1260	160	BQL
25	Chlordane (technical)	80	BQL
26	Endrin aldehyde	16	BQL

Additional Compounds:

27	Endrin ketone	16	BQL

Comments:
Sample specific quantitation limits may be calculated by multiplying the quantitation limit by the dilution factor.
BQL = Below Quantitation Limit
N/A = Not Applicable

Total Petroleum Hydrocarbon Analysis

IEA Sample No:	631-309	Date Sampled:	N/A
Client Sample No:	QC Blank	Date Received:	N/A
Client Project No:	0121.001	Date Extracted:	11-15-91

Extraction (SW 846 - 3550) / GC-FID analysis (for #2 fuel oil,kerosene,varsol)
Date Analyzed: 11-16-91 Analyzed by: Joaquin

The sample does not contain a petroleum hydrocarbon blend in the distillation range referenced above. The quantitation limit is 2.0 mg/kg.

Comment:
N/A = Not Applicable

==========

Purge and Trap (SW 846 - 5030) / GC-FID analysis (for gasoline only)
Date Analyzed: 11-17-91 Analyzed by: Joaquin

The sample does not contain a petroleum hydrocarbon blend with a distillation range similar to gasoline. The quantitation limit is 2.0 mg/kg.

Comment:
N/A = Not Applicable

Total Petroleum Hydrocarbon Analysis

IEA Sample No:	631-309-1	Date Sampled:	11-08-91
Client Sample No:	GIRSP-1	Date Received:	11-11-91
Client Project No:	0121.001	Date Extracted:	11-15-91

Extraction (SW 846 - 3550) / GC-FID analysis (for #2 fuel oil,kerosene,varsol)
Date Analyzed: 11-17-91 Analyzed by: Joaquin

The sample contains a petroleum hydrocarbon blend with a distillation range similar to varsol. The concentration is 180 mg/kg.
The quantitation limit is 100 mg/kg.

Comment:
Quantitation limit elevated due to extract dilution prior to analysis.
Extract diluted due to the presence of target compounds.

==========

Purge and Trap (SW 846 - 5030) / GC-FID analysis (for gasoline only)
Date Analyzed: 11-17-91 Analyzed by: Joaquin

The sample does not contain a petroleum hydrocarbon blend with a distillation range similar to gasoline. The quantitation limit is 2.0 mg/kg.

Comment:

an environmental testing company
P.O. Box 12846
Research Triangle Park, North Carolina 27709
(919) 677-0090
FAX (919) 677-0427

November 20, 1991

Randy Cavallier
Bain & Palmer, Inc.
2641-G Randleman Road
Greensboro, NC 27406

IEA Project No.: 631309
IEA Reference No.: A9111224
Client Project I.D.: 0121.001

Dear Mr. Cavallier,

Transmitted herewith are the results of analyses on one sample submitted to our laboratory.

Please see the enclosed reports for your results.

Very truly yours,

IEA, Inc.

Linda F. Mitchell
Director, Technical Support Services

State Certification:

Alabama - #40210	Tennessee - #00296	South Carolina - #99021
Georgia - #816	Virginia - #00179	North Carolina - #37720
New Jersey - #67719		#84

MATRIX SPIKE RECOVERY

IEA Project No.: 631-309(1)

Analyte	Analysis Date	Sample I.D.	Sample Result (ppm)	% Recovery	Method
Arsenic	11/25/91	631-309(1)-1	<0.025	99	F
Barium	11/27/91	631-309(1)-1	0.86	96	P
Cadmium	11/27/91	631-309(1)-1	<0.05	77	P
Chromium	11/27/91	631-309(1)-1	<0.15	89	P
Mercury	11/21/91	631-309(1)-1	<0.0025	88	CV
Lead	11/25/91	631-309(1)-1	<0.025	81	F
Selenium	11/24/91	631-309(1)-1	<0.025	86	F
Silver	11/26/91	631-309(1)-1	<0.25	92	P

P = ICP
CV = Cold Vapor
F = Furnace

FORM MASPREC Rev 090991

IEA LABORATORY RESULTS
TCLP

IEA Project #: 631-309(1)
Client Name: Bain & Palmer, Inc.

Client ID	Parameter	Regulatory Level		Results		Date Analyzed
	TCLP METALS:					
TCLP Blank	Arsenic	5.0	mg/L	<0.025	mg/L	11/25/91
Prep Blank	Arsenic	5.0	mg/L	<0.005	mg/L	11/25/91
TCLP Blank	Barium	100	mg/L	0.86	mg/L	11/25/91
Prep Blank	Barium	100	mg/L	<0.10	mg/L	11/25/91
TCLP Blank	Cadmium	1.0	mg/L	<0.05	mg/L	11/25/91
Prep Blank	Cadmium	1.0	mg/L	<0.01	mg/L	11/25/91
TCLP Blank	Chromium	5.0	mg/L	<0.15	mg/L	11/25/91
Prep Blank	Chromium	5.0	mg/L	<0.03	mg/L	11/25/91
TCLP Blank	Mercury	0.2	mg/L	<0.0025	mg/L	11/21/91
Prep Blank	Mercury	0.2	mg/L	<0.0005	mg/L	11/21/91
TCLP Blank	Lead	5.0	mg/L	<0.025	mg/L	11/25/91
Prep Blank	Lead	5.0	mg/L	<0.005	mg/L	11/25/91
TCLP Blank	Selenium	1.0	mg/L	<0.025	mg/L	11/24/91
Prep Blank	Selenium	1.0	mg/L	<0.005	mg/L	11/24/91
TCLP Blank	Silver	5.0	mg/L	<0.25	mg/L	11/26/91
Prep Blank	Silver	5.0	mg/L	<0.05	mg/L	11/26/91

IEA LABORATORY RESULTS
TCLP REGULATED

IEA Project #: 631-309(1)
Client Name: Bain & Palmer, Inc.

Sample #	Client ID	Parameter	Regulatory Level		Results		Date Analyzed
		TCLP METALS:					
1	GIR SP-1	Arsenic	5.0	mg/L	<0.025	mg/L	11/25/91
1	GIR SP-1	Barium	100	mg/L	0.90	mg/L	11/25/91
1	GIR SP-1	Cadmium	1.0	mg/L	<0.06	mg/L	11/25/91
1	GIR SP-1	Chromium	5.0	mg/L	<0.17	mg/L	11/25/91
1	GIR SP-1	Mercury	0.2	mg/L	<0.0028	mg/L	11/21/91
1	GIR SP-1	Lead	5.0	mg/L	<0.031	mg/L	11/25/91
1	GIR SP-1	Selenium	1.0	mg/L	<0.029	mg/L	11/24/91
1	GIR SP-1	Silver	5.0	mg/L	<0.27	mg/L	11/26/91

*The results reported have been corrected for matrix spike recovery as required in the TCLP Method (40 CFR, Part 261, Subpart C, Appendix I).

FORM TCLPM-R Rev. 051691

an environmental testing company
P.O. Box 12846
Research Triangle Park, North Carolina 27709
(919) 677-0090
FAX (919) 677-0427

December 11, 1991

Randy Cavallier
Bain & Palmer, Inc.
2641-G Randleman Road
Greensboro, NC 27406

IEA Project No.: 631309(1)
IEA Reference No.: A9111224
Client Project I.D.: 0121.001

Dear Mr. Cavallier,

Transmitted herewith are the results of analyses on one sample submitted to our laboratory.

Please see the enclosed reports for your results.

Very truly yours,

IEA, Inc.

Linda F. Mitchell
Director, Technical Support Services

State Certification:

Alabama - #40210	Tennessee - #00296	South Carolina - #99021
Georgia - #816	Virginia - #00179	North Carolina - #37720
New Jersey - #67719		#84

BAIN & PALMER, INC.
Environmental Consultants

CHAIN OF CUSTODY RECORD

Project Name Girmes Stockpile
Project Number 0121.001

SAMPLE IDENTIFICATION / ANALYSES REQUESTED

Sample No.	Lab ID No.	Description	Matrix	Date & Time Collected	Container	Preservative	TCLP metals	TPH GC	8270 BN	8240	8040	% moist	TOX	PH Flash Point	602 BTEX
GIRSP-1		Stockpile	S	11/8/91 2:00	1000ml	ice	✓								
"		Soil	"	" "	250	"		✓							
"		"	"	" "	2-40	"		✓							
"		"	"	" "	250	"			✓						
"		"	"	" "	2-40	"				✓					
"		"	"	" "	250	"					✓				
"		"	"	" "	250							✓			
"		"	"	" "	250									✓	
"		"	"	" "	2-250									✓	
"		"	"	" "	2-40										✓

Matrix:
S – soil
W – water
O – oil
DS – drum solids
DL – drum liquids
X – other _____

Special Instructions:

IEA # 631-309
631-309(0)
631-309(1)

Items/Reason	Relinquished By	Received By	Date	Time
All/Shipping	[illegible]		11/11	800
		James Hays	11/11/91	1322

Items/Reason	Relinquished By	Received By	Date	Time

an environmental testing company
P.O. Box 12846
Research Triangle Park, North Carolina 27709
(919) 677-0090
FAX (919) 677-0427

February 7, 1992

FEB 1992
RECEIVED

Randy Cavallier
Bain & Palmer, Inc.
2641-G Randleman Road
Greensboro, NC 27406

IEA Project No.: 631350
IEA Reference No.: W9201551
Client Project I.D.: 0121.001

Dear Mr. Cavallier,

Transmitted herewith are the results of analyses on four samples submitted to our laboratory.

The samples were received chilled and intact.

Analyses were performed according to approved methodologies and meet the requirements of the IEA Quality Assurance Program. Please see the enclosed reports for your results and a copy of the Chain of Custody documentation.

Please do not hesitate to call your Client Account Representative should you have any questions regarding this report.

Very truly yours,

IEA, Inc.

Suzanne L. Kanger for
Linda F. Mitchell
Director, Technical Support Services

State Certification:
Alabama - #40210
Georgia - #816
New Jersey - #67719
Tennessee - #00296
Virginia - #00179
South Carolina - #99
North Carolina - #37
#84

PCB IN SOIL

IEA Sample Number:	631-350-1	Date Received:	01/30/92
Client Name:	Bain & Palmer, Inc.	Date Sampled:	01/28/92
Client Project ID:	0121.001	Date Extracted:	02/03/92
Sample Identification:	SS-2	Date Analyzed:	02/05/92
Matrix:	Soil	Analysis By:	Willey
Moisture Correction Factor:	1.20	Dilution Factor:	10

Number	Compound	Quantitation Limit (ug/kg)	Results Concentration (ug/kg)
1	Aroclor 1016	80	BQL
2	Aroclor 1221	80	BQL
3	Aroclor 1232	80	BQL
4	Aroclor 1242	80	BQL
5	Aroclor 1248	80	BQL
6	Aroclor 1254	160	2,200
7	Aroclor 1260	160	BQL

Comments:
Sample specific quantitation limits may be calculated by multiplying the quantitation limit by the dilution factor.
BQL = Below Quantitation Limit
Quantitation limit elevated due to extract dilution prior to analysis.
Extract diluted due to the presence of target compounds.
Adjust quantitation limit for % moisture.
Target compound concentration adjusted for % moisture.

FORM PCBS Rev. 101591

PCB IN SOIL

IEA Sample Number:	631-350-2	Date Received:	01/30/92
Client Name:	Bain & Palmer, Inc.	Date Sampled:	01/28/92
Client Project ID:	0121.001	Date Extracted:	02/03/92
Sample Identification:	SS-6	Date Analyzed:	02/05/92
Matrix:	Soil	Analysis By:	Willey
Moisture Correction Factor:	1.20	Dilution Factor:	5.0

Number	Compound	Quantitation Limit (ug/kg)	Results Concentration (ug/kg)
1	Aroclor 1016	80	BQL
2	Aroclor 1221	80	BQL
3	Aroclor 1232	80	BQL
4	Aroclor 1242	80	BQL
5	Aroclor 1248	80	BQL
6	Aroclor 1254	160	1,300
7	Aroclor 1260	160	BQL

Comments:
Sample specific quantitation limits may be calculated by multiplying the quantitation limit by the dilution factor.
BQL = Below Quantitation Limit
Quantitation limit elevated due to extract dilution prior to analysis.
Extract diluted due to the presence of target compounds.
Adjust quantitation limit for % moisture.
Target compound concentration adjusted for % moisture.

FORM PCBS Rev. 101591

PCB IN SOIL

IEA Sample Number:	631-350-3	Date Received:	01/30/92
Client Name:	Bain & Palmer, Inc.	Date Sampled:	01/28/92
Client Project ID:	0121.001	Date Extracted:	02/03/92
Sample Identification:	SS-17	Date Analyzed:	02/05/92
Matrix:	Soil	Analysis By:	Willey
Moisture Correction Factor:	1.20	Dilution Factor:	10

Number	Compound	Quantitation Limit (ug/kg)	Results Concentration (ug/kg)
1	Aroclor 1016	80	BQL
2	Aroclor 1221	80	BQL
3	Aroclor 1232	80	BQL
4	Aroclor 1242	80	BQL
5	Aroclor 1248	80	BQL
6	Aroclor 1254	160	3,300
7	Aroclor 1260	160	BQL

Comments:
Sample specific quantitation limits may be calculated by multiplying the quantitation limit by the dilution factor.
BQL = Below Quantitation Limit
Quantitation limit elevated due to extract dilution prior to analysis.
Extract diluted due to the presence of target compounds.
Adjust quantitation limit for % moisture.
Target compound concentration adjusted for % moisture.

FORM PCBS Rev. 101591

PCB IN SOIL

IEA Sample Number:	631-350-4	Date Received:	01/30/92
Client Name:	Bain & Palmer, Inc.	Date Sampled:	01/28/92
Client Project ID:	0121.001	Date Extracted:	02/03/92
Sample Identification:	SS-19	Date Analyzed:	02/05/92
Matrix:	Soil	Analysis By:	Willey
Moisture Correction Factor:	1.20	Dilution Factor:	10

Number	Compound	Quantitation Limit (ug/kg)	Results Concentration (ug/kg)
1	Aroclor 1016	80	BQL
2	Aroclor 1221	80	BQL
3	Aroclor 1232	80	BQL
4	Aroclor 1242	80	BQL
5	Aroclor 1248	80	BQL
6	Aroclor 1254	160	2,200
7	Aroclor 1260	160	BQL

Comments:
Sample specific quantitation limits may be calculated by multiplying the quantitation limit by the dilution factor.
BQL = Below Quantitation Limit
Quantitation limit elevated due to extract dilution prior to analysis.
Extract diluted due to the presence of target compounds.
Adjust quantitation limit for % moisture.
Target compound concentration adjusted for % moisture.

FORM PCBS Rev. 101591

PCB IN SOIL

IEA Sample Number:	631-350	Date Received:	N/A
Client Name:	Bain & Palmer, Inc.	Date Sampled:	N/A
Client Project ID:	0121.001	Date Extracted:	02/03/92
Sample Identification:	QC Blank (PB467)	Date Analyzed:	02/05/92
Matrix:	Solid	Analysis By:	Willey
Moisture Correction Factor:	1.00	Dilution Factor:	1.0

Number	Compound	Quantitation Limit (ug/kg)	Results Concentration (ug/kg)
1	Aroclor 1016	80	BQL
2	Aroclor 1221	80	BQL
3	Aroclor 1232	80	BQL
4	Aroclor 1242	80	BQL
5	Aroclor 1248	80	BQL
6	Aroclor 1254	160	BQL
7	Aroclor 1260	160	BQL

Comments:
Sample specific quantitation limits may be calculated by multiplying the quantitation limit by the dilution factor.
BQL = Below Quantitation Limit
N/A = Not Applicable
Corresponding Samples: 631-350-1 through 4

FORM PCBS Rev. 101591

BAIN & PALMER, INC.
Environmental Consultants

CHAIN OF CUSTODY RECORD

Project Name Girmes
Project Number 121.001

SAMPLE IDENTIFICATION / ANALYSES REQUESTED

Sample No.	Lab ID No.	Description	Matrix	Date & Time Collected	Container	Preservative		RCB #8080						
SS-2		stockpile	S	11:00 1/28/92	250ml amber	ice to 4°C		"						
SS-6		"	S	"	"	"		"						
SS-17		"	S	"	"	"		"						
SS-19		"	S	"	"	"		"						

PH #631-550

Matrix:
(S) soil
W – water
O – oil
DS – drum solids
DL – drum liquids
X – other _____

Special Instructions:

Items/Reason	Relinquished By	Received By	Date	Time
samples/shipping	[illegible]	[illegible]	1/30/92	8:00
		[illegible]	1/30/92	12:08

Items/Reason	Relinquished By	Received By	Date	Time

office's decision could not bind it.

The Associated Press

a box of canned holders at the state port at W

afternoon as he helped U.S. Customs Department inspectors look for drugs. North Carolina will rece...e

more than $2.1 million from the Department of Defense to counter narcotics operations in 1990.

Asheville Hopes To Reduce Flow Through South Swannanoa Sewer Main

BY DAN VOORHIS
Staff Writer

With the possibility of state fines of $10,000 a day looming near, Asheville City Manager Doug Bean announced at Tuesday's City Council meeting a plan to reduce the flow through the South Swannanoa sewer main.

The City Council also unanimously voted Tuesday against appealing a court decision barring creation of the Chestnut-Liberty Hispanic District, leaving the area citizens to press on alone.

Last week, the state mandated the city halt all new sewer hook-ups immediately and begin reducing the flow by Thursday because the crumbling sewer line often overflows, sending raw sewage into nearby creeks and the Swannanoa River. The bans would continue until a new line is installed.

However, Bean said he will ask the state to allow residential taps because their addition to the total flow is "minimal." If new residential taps aren't permitted, he said, many new homes may be forced to install septic tanks, which he said could cause more environmental problems in the long run.

The plan calls for five steps:

- The Metropolitan Sewer District, which runs the pretreatment program for industries, will contact customers to reduce discharge. The two with the greatest impact are Sayles Bleacheries and Girmes of America. Both have tanks that can hold the discharge until there is less demand on the line.
- City staff will talk to other commercial users to reduce their discharges.
- City sewer workers will look for breaks in the line and make daily inspections of the line to measure flow.
- The MSD has tentatively agreed to let the city award the $800,000 contract earlier than planned. The MSD takes over the entire city-county sewer system on July 1.
- The city will award bids May 1, begin construction June 18 and complete the new line by Dec. 18.

Bean said the city is liable for the daily fine after Thursday if the sewer overflows, but he indicated state officials will work with the city to correct the problem.

In its efforts to establish a historic district in the Chestnut-Liberty area, City Council decided to quit while it was behind.

The city, allied with a group of citizens from the area, has lost two court cases since 1986 when it voted to form the district.

"We have had four different judges hear this and not one of them agreed with us," said Councilman Eugene Ellison. "I'm not saying anything about the merits of whether it was a good thing to have the historic district or not, but I think it's in our best interest to cut our losses."

The citizens of the district who originally petitioned to have the district created decided to press on with the case, even though they will, now, have to shoulder the legal fees.

"We have had a large number of residents who have told me they think the district is a good influence," said resident Jeanne Warner.

The citizens have petitioned the state Supreme Court to hear the case.

The county feels bad... damaged more than he thought... "But it was not done maliciously."

In other business, the council heard from Pisgah Legal Services, the government-funded legal agency for the poor, which is concerned about way federal Community Development Block Grant money is being spent.

Pisgah attorney James Barrett said the city's plan to put $500,000 of CDBG money into a downtown business development fund is shortchanging the city's own low-income housing rehabilitation plan.

The council approved the downtown loan pool at that meeting, but did not attach an amount of money pending further discussion of the matter.

Sewer-Tap Moratorium Imposed

Raw Sewage Flowing Into Swannanoa River

By CLARKE MORRISON
Staff Writer

The state has slapped a moratorium on new sewer taps in a section of Asheville drained by a major sewer line because the city hasn't stopped the gush of raw sewage into creeks and the Swannanoa River.

In addition, city officials must find a way by March 1 to decrease the amount of wastewater flowing into the South Swannanoa Interceptor and stop the spilling, according to the order issued Friday by the N.C. Division of Environmental Management.

No new building taps or increase in flow into the interceptor will be permitted until the line is replaced, a major project that probably take months.

The moratorium affects a fast-growing area around River Ridge Mall and the Oakley community that contains hundreds of homes and businesses and several industries.

Roy Davis, regional supervisor of the DEM, said in a letter to City Manager Doug Bean that the "chronic overflows of untreated sewage" into surface waters is a violation of state law.

"As a result and considering the seriousness of the matter, I am requesting that the city of Asheville take all reasonable and proper steps to immediately cause wastewater flows to this line be reduced to the level that this overflow ceases," Davis said. "Additionally, I am informing the city that no new building taps or increase in volume of existing waste flows to the line are to be authorized until the matter is resolved and a replacement sewer constructed."

Davis said in an interview the action was prompted by complaints about the color of the Swannanoa River and Gashes Creek. A visit Wednesday to a manhole next to Gashes Creek off Fairview Road showed a purplish liquid gushing from the manhole into the creek, which feeds the river a few hundred v[illegible]s away. Davis said that is typical [illegible]veral manholes over the inter[illegible]tor.

"Our expectation of the city is that they stop the overflow," he said.

The law provides for fines of up to $10,000 per day, but Davis said the

See SEWER, Page 8A

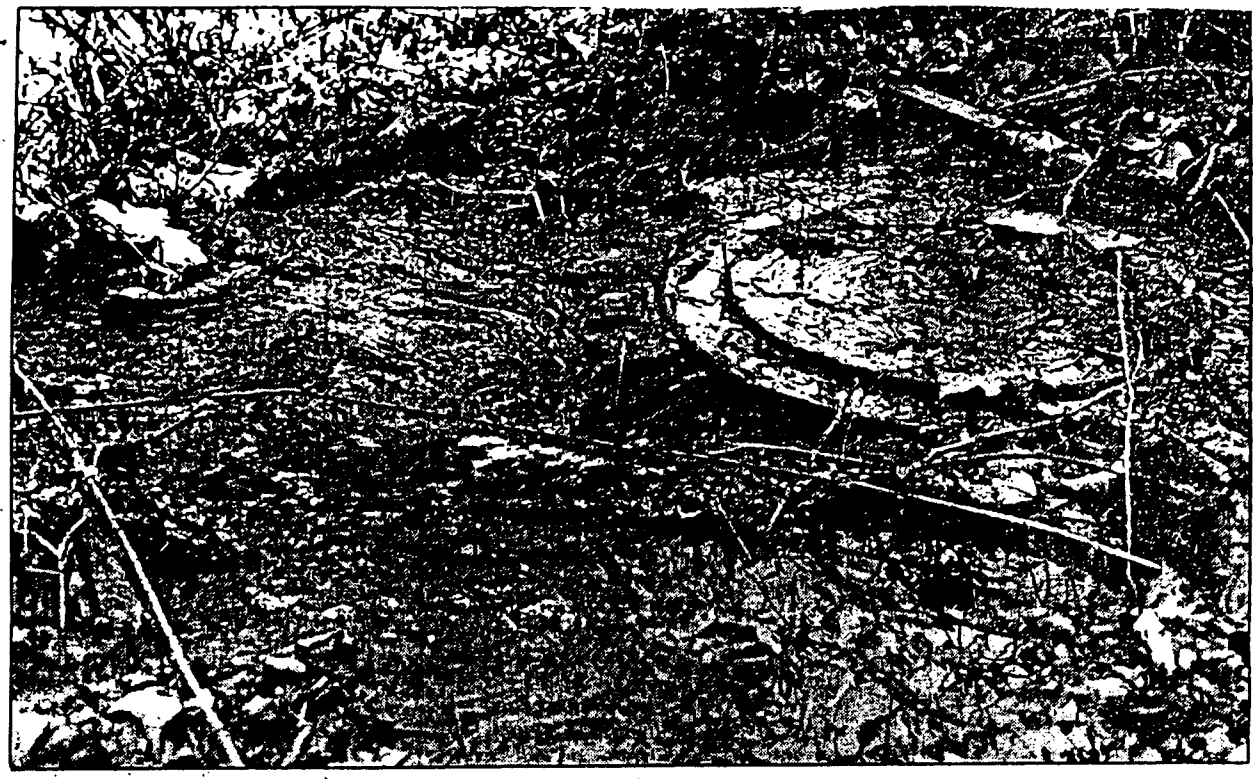

— Photo By CLARKE MORRISON

Spilling Sewage

Raw sewage, purplish in color, was spilling from this manhole into Gashes Creek off Fairview Road Wednesday. State officials have ordered the city to find a way to stop the overflow from this and other manholes along the South Swannanoa Interceptor.

Sewer

From Page 1A

fines usually aren't levied unless the local government is uncooperative.

The city completed design work in December 1988 for replacement of the offending section of the interceptor, which starts along the Swannanoa River near Interstate 240, runs east along the river past River Ridge Mall, then south along Gashes Creek to about the intersection of I-240 and Interstate 40.

Bean said that while the replacement plans were approved by the state in January 1989, the $800,000 project languished in part because of the negotiations over consolidation of all sewer lines in the county and their transfer of their ownership to the Metropolitan Sewerage District. That agreement was signed by the county and its municipalities in November and the transfer is effective July 1.

He said the city will go to bid on the project in about three weeks, probably begin construction in June and it will take about six months to complete.

The moratorium on new sewer taps in the River Ridge and Oakley area should not present a big problem, Bean said. He said he knew of no pending construction activities. The line also drains parts of the county along U.S. 74, including the Reynolds area.

"Since this (project) is ready to go, I'm not nearly so concerned," he said. "We knew it was a problem, we appropriated the funds, we've done the design work and are ready to go to bids."

Bean would not say if or how the city would reduce wastewater flows into the interceptor as the state ordered. Davis suggested in his letter that one way would be for the city to work through MSD to get large water users that are affected to time their releases of wastewater when demand on the system is low.

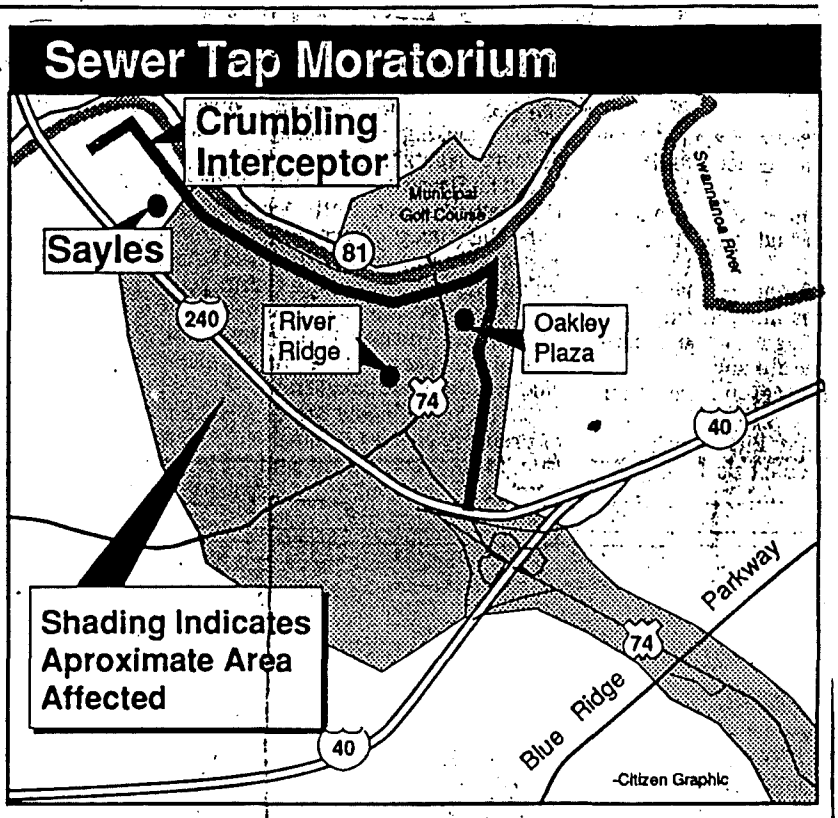

Charlotte, NC
Raleigh, NC
Columbia, SC
Winston-Salem, NC
Asheville, NC
Knoxville, TN
Greenville, SC
Chattanooga, TN
Nashville, TN

SPATCO

August 14, 1991

Bain, Palmer & Associates
2641-G Randleman Road
Greensboro, N C 27406

Attention: Mr. John Stewart

REFERENCE: Tank Test Results @ Girmes of America - Asheville

Dear Sir:

Enclosed is tank test results from Gilbarco for the two(2) 30,000 gallon tanks tested at Girmes. The invoice for their service will be sent a little later.

It appears that both tanks passed the requirement of the test. If you have any questions pertaining to the test results,please call Gilbarco @ 919-547-5000 & refer to the job#321.

Thank you for the opportunity for us to provide this service ans we hope to serve you further.

Cordially,

SPATCO-ASHEVILLE

Ray Allen

Ray Allen
Inside Industrial Sales

RA/emw

Enclosure

P.O. Box 369 / 1880 Smoky Park Highway / Candler, North Carolina 28715-0369 / (704) 667-4536

GILBARCO INC
7300 W. FRIENDLY AVENUE
P. O. BOX 22087
GREENSBORO, N. C. 27420

CABLE ADDRESS "GILBARCO"
PHONE 919/547-5000
FAX 919/292-8871

Gilbarco

08/12/91

SPATCO ASHEVILLE
1880 SMOKY PARK HWY
CHANDLER, NC 28715

Gilbarco performed precision tests 08/08/91 on underground storage tanks located at:

GIRMES OF AMERICA
CHARLOTTE HWY
ASHEVILLE, NC

Job Number: 321

The Gilbarco Precision Test Protocol was strictly adhered to, and complies with USEPA Regulation 40 CFR Part 280 and all applicable State Regulations governing the testing of underground storage tanks. The Gilbarco test of the wetted portion of the tank (Alert 1000 System) is capable of detecting a leak of 0.1 gph or greater with a probability of detection of 99.9% and a probability of false alarm no greater than 0.04%. Both the product line and non-wetted test methods are capable of detecting a leak of 0.1 gph with a probability of detection of 100% and a probability of false alarm of 0.0%.

Test results for this site are summarized as follows:

TANK CONTENTS VOLUME	%FULL	WETTED PORTION	NON-WETTED PORTION	LINE TEST	LEAK DETECTOR	WATER (IN)
#5 OIL 30000 GALLONS	95	PASS 0.020 GPH	PASS	SUCT GPH		0
#5 OIL 30000 GALLONS	95	PASS -0.017 GPH	PASS	SUCT GPH		0
NOT USED GALLONS		GPH		GPH		
NOT USED GALLONS		GPH		GPH		

WATER LEVEL IN THE BACKFILL AREA: 0 INCHES ABOVE TANK BOTTOM

PLEASE REFER TO TEST DATA ATTACHED FOR MORE COMPLETE DETAIL.

TEST DATA REVIEWED BY: Larry A. Gillus
LARRY A. GILLUS

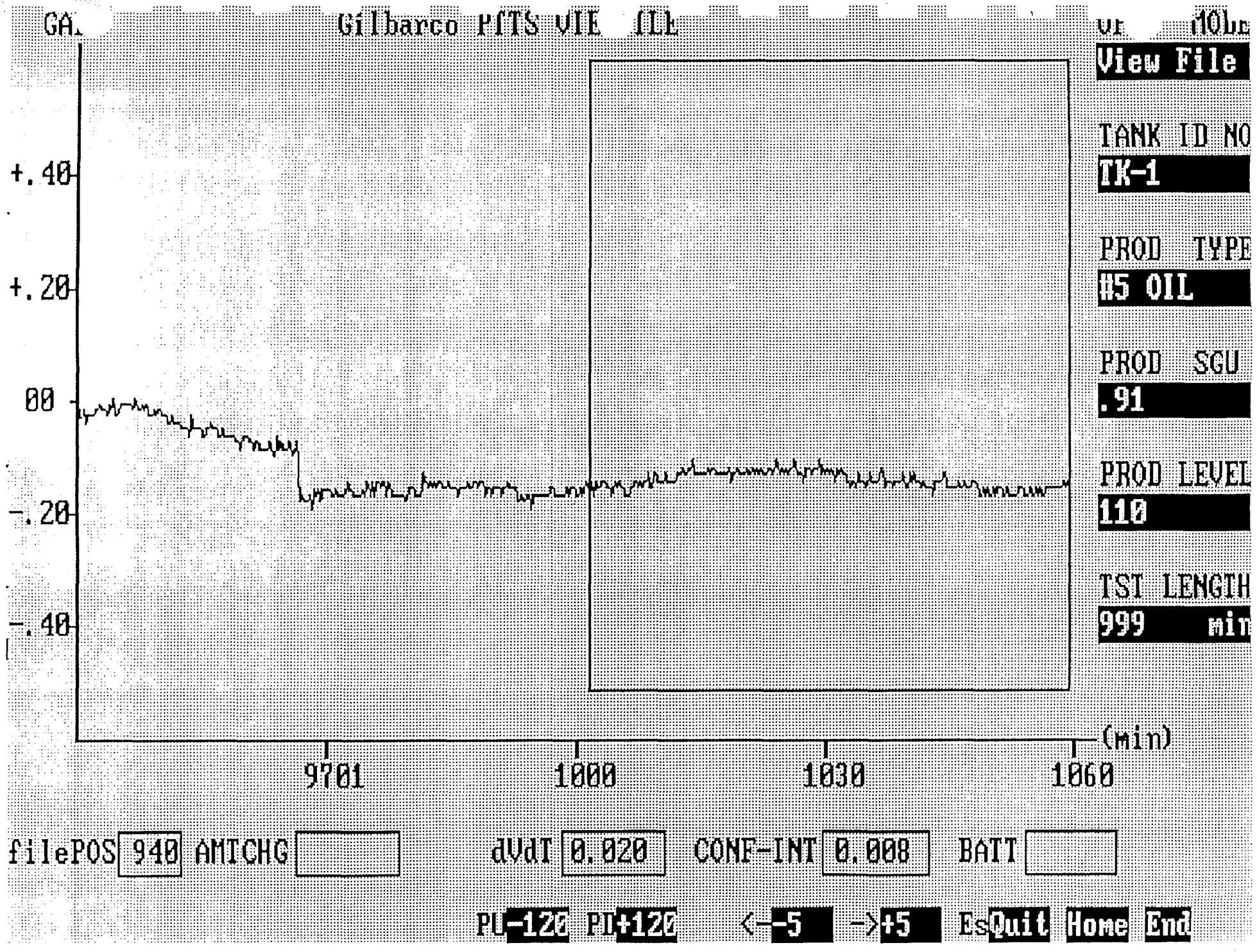
GA
Gilbarco PITS VIE ILE
View File
TANK ID NO
TK-1
PROD TYPE
#5 OIL
PROD SGU
.91
PROD LEVEL
110
TST LENGTH
999 min
+.40
+.20
00
-.20
-.40
(min)
9701
1000
1030
1060
filePOS 940 AMTCHG
dVdT 0.020 CONF-INT 0.008 BATT
PU-120 PD+120 <--5 -->+5 EsQuit Home End

GILBARCO ULLAGE TEST

RATIO OF REFERENCE TO NOISE

GIRMES OF AMERICA
CHARLOTTE HWY
ASHEVILLE, NC

30000 GALLON #5 OIL TANK 1 TANK

P = PASS, F = FAIL

:ME AMPLITUDE RATIO

	12KHZ	25KHZ
	---1---2---3---4---5---6---7--	---1---2---3---4---5---6---7--
	PPPP	PPPP
	PPPP	PPP
	PPP	PPP
1	PPPP	PPP
	PPPP	PPPP
	PPP	PPP
	PPP	PPP
2	PPPP	PPPP
	PPP	PPP
	PPPP	PPP
	PPP	PPP
3	PPP	PPP
	PPP	PPP
	PPP	PPPP
	PPPP	PPPP
	PPP	PP
	PPP	PPP
	PPP	PPP
	PPP	PPPP
	PPP	PPP

AVERAGE DETECTION RATIO: 0.97

RESULT: PASS

AVERAGE DETECTION RATIO: 0.94

RESULT: PASS

TEST RESULT: PASS

DATE AND TIME OF TEST: 8/07/91 6:45PM

BEGINNING BOTTLE PRESSURE = 2500 PSIG ENDING BOTTLE PRESSURE = 2350 PSIG

BEGINNING TANK PRESSURE = 1.5 PSIG ENDING TANK PRESSURE = 1.4 PSIG

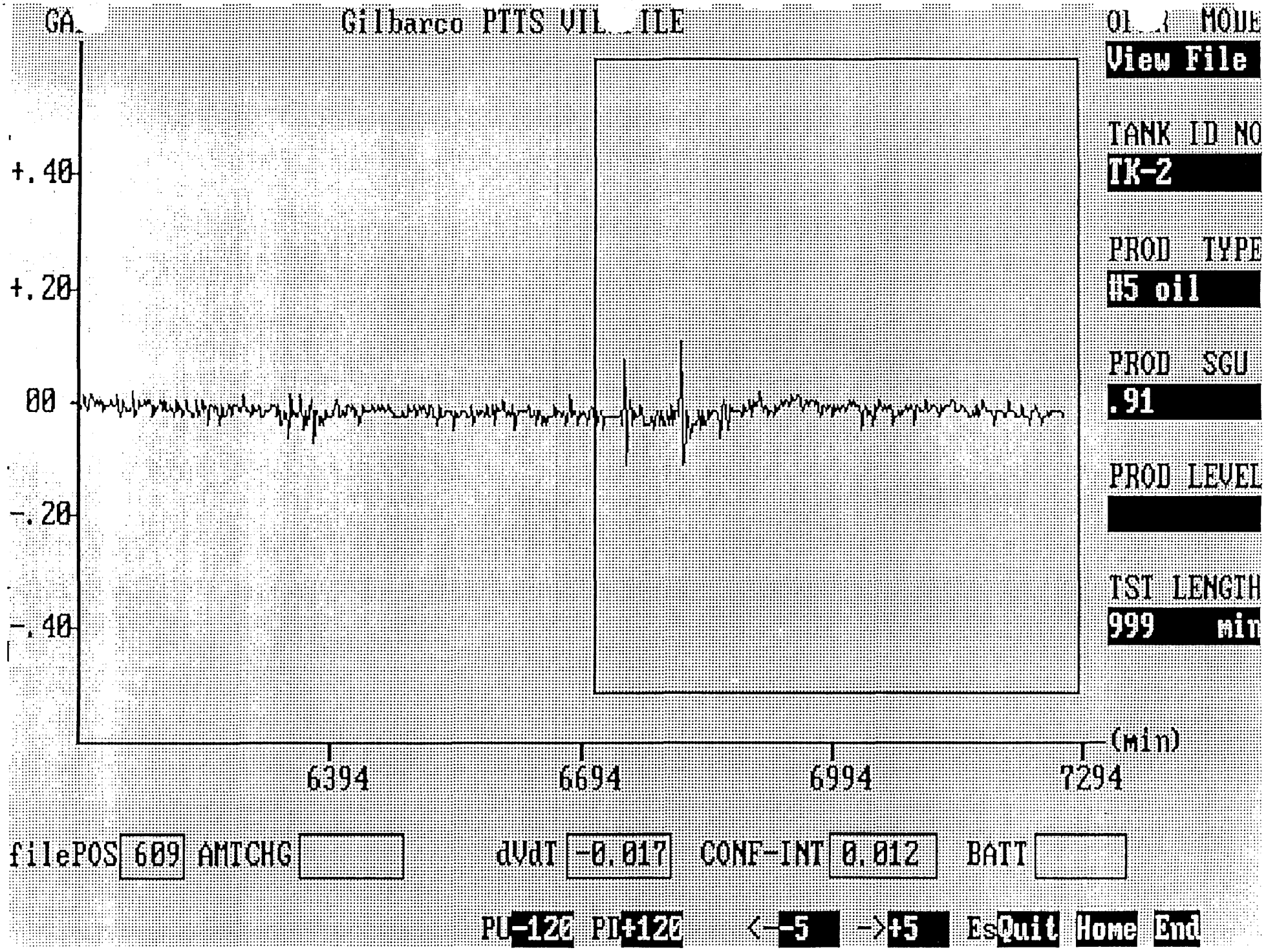
GA
Gilbarco PTTS VIL ILE
OL R MODE
View File
TANK ID NO
TK-2
PROD TYPE
#5 oil
PROD SGU
.91
PROD LEVEL
TST LENGTH
999 min
+.40
+.20
00
-.20
-.40
(min)
6394
6694
6994
7294
filePOS 609 AMTCHG
dVdT -0.017 CONF-INT 0.012 BATT
PU-120 PD+120 <-5 ->+5 EsQuit Home End

GILBARCO ULLAGE TEST

RATIO OF REFERENCE TO NOISE

GIRMES OF AMERICA
CHARLOTTE HWY
ASHEVILLE, NC

30000 GALLON #5 OIL TANK 2 TANK

P = PASS, F = FAIL

_. 4E

AMPLITUDE RATIO

	12KHZ	25KHZ
	---1---2---3---4---5---6---7--	---1---2---3---4---5---6---7--
	PPPP	PPPP
	PPP	PPPP
	PPP	PPP
1	PPPP	PPP
	PPP	PPP
	PPP	PPP
	PPP	PPP
2	PPP	PPP
	PPP	PPPP
	PPP	PPP
	PPP	PPP
	PPP	PPPP
	PPPP	PPP
	PPP	PPP
	PPP	PPP
4	PPP	PPPP
	PPP	PPP
	PPP	PPP
	PPP	PPP
5	PPP	PPPP

AVERAGE DETECTION RATIO: 0.93

RESULT: PASS

AVERAGE DETECTION RATIO: 0.96

RESULT: PASS

TEST RESULT: PASS

DATE AND TIME OF TEST: 8/08/91 12:35PM

BEGINNING BOTTLE PRESSURE = 2500 PSIG

ENDING BOTTLE PRESSURE = 2350 PSIG

BEGINNING TANK PRESSURE = 1.5 PSIG

ENDING TANK PRESSURE = 1.5 PSIG

Statement of Compliance
Gilbarco Precision Tank Test

The Gilbarco Precision Tank Test, when performed by a certified Gilbarco tank test technician in accordance with documented Gilbarco tank test protocol complies with the technical standards for release detection in Section 280.40 and Section 280.43 of U.S. EPA Regulation 40 CFR Part 280. The Gilbarco Precision Tank Test (tested as the Alert 1000 Tank Test System) was tested as capable of detecting a leak of 0.1 gal./hr. or greater with a probability of detection of 99.9% and a probability of false alarm no greater than 0.04% in the wetted portion of the tank. The Gilbarco Ullage Test (tested as the Alert 1050 Ullage System) was tested as capable of detecting a leak of 0.1 gal./hr. or greater with a probability of detection of 100% and a probability of false alarm no greater than 0.0%. The Gilbarco Precision Line Test (tested as the Hasstech Precision Line Test) was tested as capable of detecting a leak of 0.1 gal./hr. with a probability of detection of 100% and a probability of false alarm no greater than 0.0%.

The above performance claims were determined in the following manner:

1. Underfill Test:

The underfill portion of the Gilbarco Precision Tank Test was tested in accordance with the U.S. EPA's "Standard Test Procedure For Evaluating Leak Detection Methods: Volumetric Tank Testing Methods." The tests were performed by Midwest Research Institute under MRI project number 9492-S and documented in a report dated March 22, 1990.

2. Ullage Test:

The ullage portion of the Gilbarco Precision Tank Test was tested in accordance with the U.S. EPA's "Standard Test Procedure for Evaluation Leak Detection Methods: Nonvolumetric Tank Tightness Methods." These tests were performed by Ken Wilcox Associates and presented in a report dated February 3, 1991.

3. Line Test:

The Precision Line Tester was developed by Hasstech, Inc. and was tested in accordance with the U.S. EPA's "Standard Test Procedures for Evaluating Leak Detection Methods: Pipeline Leak Detection Systems." These tests were performed by Lamar University in Beaumont Texas.

Statement of Compliance
Gilbarco Precision Tank Test

The Gilbarco Precision Tank Test, when performed by a certified Gilbarco tank test technician in accordance with documented Gilbarco tank test protocol complies with the technical standards for release detection in Section 280.40 and Section 280.43 of U.S. EPA Regulation 40 CFR Part 280. The Gilbarco Precision Tank Test (tested as the Alert 1000 Tank Test System) was tested as capable of detecting a leak of 0.1 gal./hr. or greater with a probability of detection of 99.9% and a probability of false alarm no greater than 0.04% in the wetted portion of the tank. The Gilbarco Ullage Test (tested as the Alert 1050 Ullage System) was tested as capable of detecting a leak of 0.1 gal./hr. or greater with a probability of detection of 100% and a probability of false alarm no greater than 0.0%. The Gilbarco Precision Line Test (tested as the Hasstech Precision Line Test) was tested as capable of detecting a leak of 0.1 gal./hr. with a probability of detection of 100% and a probability of false alarm no greater than 0.0%.

The above performance claims were determined in the following manner:

1. Underfill Test:

The underfill portion of the Gilbarco Precision Tank Test was tested in accordance with the U.S. EPA's "Standard Test Procedure For Evaluating Leak Detection Methods: Volumetric Tank Testing Methods." The tests were performed by Midwest Research Institute under MRI project number 9492-S and documented in a report dated March 22, 1990.

2. Ullage Test:

The ullage portion of the Gilbarco Precision Tank Test was tested in accordance with the U.S. EPA's "Standard Test Procedure for Evaluation Leak Detection Methods: Nonvolumetric Tank Tightness Methods." These tests were performed by Ken Wilcox Associates and presented in a report dated February 3, 1991.

3. Line Test:

The Precision Line Tester was developed by Hasstech, Inc. and was tested in accordance with the U.S. EPA's "Standard Test Procedures for Evaluating Leak Detection Methods: Pipeline Leak Detection Systems." These tests were performed by Lamar University in Beaumont Texas.

SUPPLEMENTAL ENVIRONMENTAL INVESTIGATION
J.L. de BALL - GIRMES OF AMERICA, INC. ASHEVILLE, N.C. PLANT

Prepared For:
J.L. de BALL-GIRMES OF AMERICA

MARCH 4, 1993

I hereby certify this 4th day of March 1993, that this report was prepared by me or under my direct supervision.

Kenneth B. Vanhoy

Kenneth B. Vanhoy
Geologist

Alan Barry Nelson

Barry Nelson, P.G.
Senior Hydrologist

NORTH CAROLINA
LICENSED
SEAL
165
GEOLOGIST
ALAN BARRY NELSON

TABLE OF CONTENTS

INTRODUCTION 1

PURPOSE AND SCOPE OF WORK 2

SUBSURFACE EXPLORATIONS 3
- Description of Subsurface Explorations 3
- Soil Sampling/Classification 3
- Monitoring Well Installation 4
- Groundwater Sampling Methodology and Laboratory Testing 5

GROUNDWATER TABLE CONDITIONS AND FLOW DIRECTION 6

RESULTS OF GROUNDWATER INVESTIGATION 7

SOIL REMEDIATION 8
- Site Sensitivity Evaluation 8
- Soil Removal and Sampling 8
- Analytical Results 9

TABLES

Table 1	Summary of Groundwater Elevation Data
Table 2	Groundwater Analytical Results
Table 3	Summary of Oil and Grease Results

FIGURES

Figure 1	Site Location Map
Figure 2	Monitoring Well Locations
Figure 3	Potentiometric Surface Map of Water Table (2-12-93)
Figure 4	Trichloroethylene (TCE) Equiconcentration Map
Figure 5	Detailed Site Map of Pump House and Soil Sampling Locations
Figure 6	Detailed Site Map of Oil House and Sampling Locations

APPENDICES

Appendix A	Soil Boring Logs
Appendix B	Well Construction Diagrams
Appendix C	Bain, Palmer & Associates, Inc. Technical Standards (T/S-2, -4, -7, and -9)
Appendix D	Groundwater Sampling Field Data Sheets
Appendix E	Groundwater Laboratory Reports
Appendix F	Summary of Phase II Soil and Groundwater Results (SM&E) and Site Sensitivity Evaluation
Appendix G	Soil Laboratory Reports

INTRODUCTION

J.L. de Ball Girmes is a former textile plant located on the east side of Old U.S. Highway 74 in Asheville, North Carolina. Figure 1 is a location map of the facility. Girmes first retained Bain, Palmer & Associates (BPA) to conduct a Phase I Environmental Site Assessment in conjunction with the sale of the property in April 1991. The assessment identified several areas of possible concern including the following: several chemical storage areas and areas of apparently minor spillage, floor drains and sumps, a small parts degreasing sink, two 30,000 gallon fuel oil tanks, a 30,000 gallon quench oil tank that was reportedly removed in 1972, a 550 gallon gasoline tank that was removed on September 1, 1989, an aboveground propane storage tank, a 550-gallon diesel fuel tank located in the pump house, a wastewater treatment plant, demolition debris located at the baseball field and on the slope to the rear of the main building, and a drainage area on the slope in the rear of the main building where a pipe from the facility discharged. In conjunction with this assessment and the shut down of the facility, the following activities related to environmental remediation were completed at the plant:

- Washdown of drains and sumps.
- Removal of propane tank.
- Removal of demolition debris from the ball field and bank area.
- Shut down and cleaning of the equalization basin at the Wastewater Treatment Plant (WWTP).
- Removal of lint from the WWTP area and soil testing.
- Soil testing at the two 30,000 gallon tanks.
- Leak testing of the two 30,000 gallon tanks
- Soil testing, removal, and disposal along the drainage area.
- Analysis of groundwater from an on-site well.

, a potential buyer of the facility, retained S&ME, Inc. to perform a Phase II Site Assessment to further evaluate potential environmental concerns identified in the Phase I Assessment. In summary, the Phase II Assessment included

performing limited interviews with past employees, the drilling of soil test borings, hand auger borings, backhoe excavated test pits, and the installation of two monitoring wells. Representative groundwater samples were collected and subjected to quantitative laboratory testing. The testing identified the presence of certain compounds in excess of current groundwater standards with the most prevalent compound being Trichloroethylene (TCE) in monitoring well MW-2. Various soil samples containing Total Petroleum Hydrocarbons and Oil and Grease concentrations were detected in excess of allowable concentrations. As a result, two "hot spots" were identified; one next to the pump house and one next to the oil house.

PURPOSE AND SCOPE OF WORK

The purpose of this investigation was to expand the groundwater monitoring system in order to better determine the extent/source of the TCE contamination at the site and to remediate the soil contamination located at the pump and oil houses.

The scope of work performed during this investigation included:

- Installing 5 shallow (<50 feet), 2 inch diameter, 316 stainless steel regolith monitoring wells along the toe of the slope.
- Installing 2 deep (<100 feet) open hole bedrock wells at the top of the slope.
- Screening of soil samples collected during drilling operations with an Organic Vapor Analyzer to evaluate the potential for soil contamination at the monitoring well locations.
- Removing contaminated soil at the oil and pump house and documenting closure through soil sample analysis.
- Surveying well elevations in order to determine groundwater flow direction.
- Preparing a report of findings.

SUBSURFACE EXPLORATIONS

Description of Subsurface Explorations

Seven permanent monitoring wells were installed near the embankment debris area to the northeast of the facility to supplement two existing permanent monitoring wells at the site. A well location diagram is presented as Figure 2.

Two monitoring wells (MW-4 and MW-5) were installed at the top of the debris slope embankment into bedrock at terminating depths of 82 ft. and 73 ft., respectively. These wells were installed using air drilling techniques. The remaining five monitoring wells (MW-6, -7, -8, -9 and -10) were installed at the base of the debris slope within the soil profile (regolith) at depths ranging from 24 to 50 ft. These wells were installed using hollow stem auger drilling techniques.

The monitoring wells were located in the field by our personnel using the existing structures and existing property lines as points of reference. The bedrock monitoring wells were installed with a truck mounted Speed Star SD 300 air rig and the regolith wells were installed with an all terrain Mobile B-57 drill rig. Detailed descriptions of the methods and procedures used to perform soil sampling/classification, monitoring well installation, and groundwater sampling methodology are presented below.

Soil Sampling/Classification

Soil samples were collected from each monitoring well from the auger and drill cuttings brought to the surface while drilling. Auger cuttings were collected every five ft. at the regolith wells. Soil and rock cuttings produced by the air hammer were collected approximately every 10 ft. at the two bedrock wells. Each sample was sealed in a plastic bag and immediately screened for volatile organic vapor with a Century Organic Vapor Analyzer (OVA). The OVA probe was inserted in the bag and a gas vapor concentration was recorded.

The OVA screening results are summarized on the soil boring logs (See Appendix A). The results of the OVA screening did not detect any unusually high organic vapors, therefore, no soil samples were submitted for laboratory analysis.

A field log of the soils encountered in the borings was prepared by an onsite geologist. The geologist classified each soil sample on the basis of texture and plasticity in accordance with the Unified Soil Classification System. A brief description of the soils encountered at the site are presented on the boring logs located in Appendix A of this report. The geologist grouped the various soil types into the major zones noted on the boring logs. The location of the stratification lines designating the interfaces between earth materials on the boring logs and profiles are approximate; in-situ, the contact between material types may be transitional.

The soil samples will be retained in our laboratory for a period of sixty (60) days after the date of this report, after which they will be discarded unless instructions as to their disposition are received.

Monitoring Well Installation

Following completion of soil sampling, seven permanent monitoring wells (MW-4 through MW-10) were installed at the locations indicated in Figure 2. The wells were installed in order to detect the presence of any contaminants which may have migrated through the soils into the water table aquifer. All wells were installed according to State and Federal regulations governing the construction of monitoring wells. All downhole drilling equipment was steam cleaned between borings to prevent the possibility of cross-contamination.

In general, regolith wells MW-6 through MW-10 were constructed of a 10 ft. length of 2-inch (ID) stainless steel screen (Slot size 0.010 inches) connected to a 10 ft. length of 2-inch (ID) stainless steel riser pipe and then 2-inch (ID) PVC riser to the surface. The well screens were located approximately 10 ft. into the water table aquifer to insure the interception of any floating product that may have existed at the site. Stainless steel screens were used, as

opposed to PVC screens, because solvents such as trichloroethylene have been known to react with PVC. A gravel pack of clean silica sand was placed around the screened wells and a bentonite seal was placed immediately above the screen. The wells were then grouted to land surface using neat Portland Cement. Bedrock monitoring wells MW-4 and MW-5 were constructed using 6 1/4 inch ID Schedule 40 PVC riser set approximately 6 ft. into the top of bedrock and extended to land surface. The annular space around the 6 1/4 inch PVC casings were grouted to the land surface to seal off the regolith from the bedrock aquifer. Both regolith and bedrock wells were installed within protective metal vaults and sealed with water proof expansion caps and locks to discourage unauthorized usage and prevent outside contamination. Copies of well construction diagrams for the individual wells are presented in Appendix B.

Groundwater Sampling Methodology and Laboratory Testing

The bedrock monitoring wells (MW-4 and MW-5) were sampled on February 4 and an on-site supply well on February 3, 1993. Regolith monitoring wells MW-1, -2, -6, -7, -8, -9, and -10 were sampled on February 12, 1993. The monitoring wells were sampled according to Bain, Palmer & Associates Technical Standard T/S-7. A copy of the technical standard is located in Appendix C. A log sheet documenting each sampling event has been maintained for the site. The static water (fluid) level of the well and its total depth were determined in the field using an electric measuring tape. The water (fluid) level measurements were recorded to the nearest 0.01 ft. and referenced to the top of the 2-inch or 6-inch well casing. Samples from monitoring wells MW-6, -7, -8, and -10 were split with S&ME, Inc.

The volume of water standing in the regolith wells was determined and the wells were purged by either removing four (4) well volumes or by purging the wells to dryness. It was not feasible to purge 4 well volumes from the supply well, which is over 150 ft. deep and no longer in use. However, six gallons of water were removed by hand bailing prior to sampling. A minimum of two complete well volumes was removed from bedrock wells MW-4 and MW-5 with the use of the air rig prior to pulling out of the hole. In this method the well bore was

blown dry at the completion of drilling, allowed to recover and blown completely dry a second time. Additionally, eight gallons were bailed from MW-4 and ten gallons from MW-5 prior to sampling. Following purging, groundwater samples were taken and the critical field parameters pH, temperature, and conductivity were measured and recorded on the groundwater sampling field sheets. A groundwater sampling data field sheet for each well is provided in Appendix D.

Clear, teflon bailers were used to obtain the sample from each well in order to detect any floating product layer which might have been present. The sampling personnel wore latex gloves which were changed between wells and used separate bailers at each well to prevent the possibility of any cross contamination. Additionally, new nylon bailer cord was used for each purging/sampling event. Teflon bailers were used, as opposed to PVC disposable bailers, in order to determine if previously detected bis (2-ethylhexyl) phthalate was a true groundwater contaminant at the site or a sampling/analytical artifact.

Samples were collected in the appropriate sample containers, labeled and the samples placed on ice according to Technical Standard T/S-4. A chain of custody form was developed for the samples and all pertinent data recorded in a sample collection log book according to Technical Standard T/S-2. The samples were then inventoried, and subsequently transported to an EPA approved laboratory according to Technical Standard T/S-9. A copy of these Technical Standards are provided in Appendix C. A groundwater sample from each well was analyzed for volatile organics using EPA Method 624. Additionally, monitoring wells MW-1 and MW-6 were analyzed for semi-volatiles and base neutrals by EPA Method 625. S&ME, Inc. indicated that they would analyze their split samples using EPA Methods 624 and 625.

GROUNDWATER TABLE CONDITIONS AND FLOW DIRECTION

Water level observations were made shortly after well installation and prior to sampling of the monitoring wells. Figure 3 is a potentiometric surface map of the water table aquifer on February 12, 1993. Flow lines superimposed on the groundwater level contours show that

groundwater flows to the north/northeast. As might be anticipated, the groundwater flow direction generally follows the topographic contour of the land. Table 1 is a summary of the groundwater elevation data collected at the permanent monitoring wells on February 12, 1993.

All the elevation data presented in this report is based on a third order level survey performed by Bain, Palmer & Associates. It should be noted that the elevations presented in this report do not use sea level as the datum plane from which all points are referenced. Instead, these elevations are referenced to a temporary benchmark (TBM) which was assigned an elevation of 100 ft. The TBM is located on the corner of a cement slab that supports an electrical transformer. The TBM was marked with black paint and is located near well MW-5.

RESULTS OF GROUNDWATER INVESTIGATION

As mentioned previously, the bedrock monitoring wells (MW-4 and MW-5) were sampled on February 4 and an on-site supply well on February 3, 1993. Regolith monitoring wells MW-1, -2, -6, -7, -8, -9, and -10 were sampled on February 12, 1993. A groundwater sample from each well was analyzed for volatile organics using EPA Method 624. Additionally, monitoring wells MW-1 and MW-6 were analyzed for semi-volatiles and base neutrals by EPA Method 625 in order to determine if previously detected bis(2-ethylhexyl) phthalate was a true groundwater contaminant at the site. The sample results are summarized in Table 2 and the laboratory results area included in Appendix E.

A review of the laboratory analyses indicates that trichloroethylene was detected above the States Water Quality Standard of 2.8 ppb in monitoring wells MW-2, -4, -5, -7, -9 and -10. The highest level of contamination was found in bedrock well MW-5 at 8020 ppb and the least in regolith well MW-7 at 47 ppb. An equiconcentration map showing the distribution of trichloroethylene at the site is presented as Figure 4. Additionally, 1,2 dichloroethylene was detected in monitoring wells MW-9 and MW-10 at 99 and 1,400 ppb, respectively; and vinyl chloride was detected in monitoring well MW-10 at 18 ppb. No semi-volatile/base

neutral constituents, including bis (2-ethylhexyl) phthalate, were detected in either monitoring wells MW-1 or MW-6 indicating that previous sampling devices may have been the source of this constituent.

Based on groundwater quality data, it appears that the area behind the plant building has a contamination plume that extends at least to the top of the slope with the highest concentrations nearest the top of the slope. It is likely that some remedial actions will be required to meet the North Carolina 2L groundwater standards.

SOIL REMEDIATION

Site Sensitivity Evaluation

A Phase II site assessment performed by S&ME, Inc. in January of 1993 identified five locations at the site where Oil and Grease contamination due to surface spills were located. A summary of the Phase II soil and groundwater results and a well and soil boring location map are presented in Appendix F. In order to establish a clean-up level for Oil and Grease at the site, a Site Sensitivity Evaluation (SSE) was performed. The SSE was completed using the geologic and hydrologic data collected in conjunction with this and previous investigations and the conditions encountered at two locations where soil was removed due to oil and grease contamination. The SSE indicates that an oil and grease clean-up level of 1,400 ppm and a medium boiling point hydrocarbon clean-up level of 480 ppm. Therefore, based on the SSE, the area next to the pump house and an area next to the oil house were targeted for soil remediation. A copy of the SSE Form is located in Appendix F.

Soil Removal and Sampling

On February 11 and 15, 1993 a representative from BPA met with personnel from Garland Brothers Construction, Inc. to excavate and sample soils adjacent to the pump and oil house. Additionally, a representative from SM&E was present to split soil samples. The area of

stained soil at the pump house was removed on February 11. The final excavation encompasses an area approximately 13 ft. long, 5 ft. wide and 4 ft. deep. The area of stained soil at the oil house was removed on February 15. The final excavation encompassed an irregularly shaped area approximately 35 ft. long, 6 ft. wide and 5-6 ft. deep. Due to the low volatility of the oil and grease compounds, soils were excavated on the basis of apparent odors and color exhibited by the soil. All of the excavated soil was stockpiled on and covered with plastic. It was estimated that 2 truck loads or approximately 34 tons were excavated at the pump house and 4 truck loads or approximately 68 tons were excavated at the oil house.

Two samples (B-1 and B-2) were taken approximately 4 ft. from the floor of the excavation at the pump house and three samples (B-3, B-4, and B-5) were taken approximately 6 ft. from the floor of the excavation at the oil house. Additionally, due to the physical appearance and odor of the soil in the sidewall of the oil house excavation, two side wall samples were collected at approximately 4 ft. below ground surface. Soil samples were collected with the use of a hand auger. The sample collector wore clean disposable vinyl gloves for the collection of each sample. The soil samples were immediately placed in clean glass jars and sealed with teflon lined polypropylene lids, packed in a cooler with a chain of custody form, and transported to the laboratory for analysis. The soil samples were analyzed for oil and grease compounds using SW-846 Method 9071. Figures 5 and 6 are detailed site maps of the pump and oil houses, respectively, showing the location of the excavations and soil sampling locations.

Analytical Results

The laboratory results are summarized in Table 3 and a copy of the laboratory reports are located in Appendix G. Laboratory analysis detected 1240 ppm and 28,300 ppm oil and grease in samples B-1 and B-2, respectively. Samples B-3, B-4, and B-5 contained 190, 70, and 160 ppm oil and grease, respectively. Sidewall samples SW-1 and SW-2 contain 2,100 ppm and 250 ppm, respectively. Based on the lab results soil from the area of sample B-2 and sidewall sample SW-2 will require additional excavation.

TABLE 1
SUMMARY OF GROUNDWATER ELEVATION DATA

Elevation of[1]				Depth[2] of Well (ft)	Static Water Levels[3] February 12, 1993	
Well No.	Land Surface	Top of Casing	Top of Screen		Depth (ft)	Elevation
MW-1	99.37	99.20	44.20	70.0	57.00	42.20
MW-2	50.89	50.69	35.69	30.0	20.87	29.82
MW-4	98.72	98.34	-*	82.0	60.00	38.34
MW-5	97.45	97.38	-*	73.0	62.75	34.63
MW-6	75.97	78.37	35.97	52.4	43.10	35.27
MW-7	44.07	47.31	30.07	27.24	18.32	28.99
MW-8	49.48	51.37	31.48	29.89	22.74	28.63
MW-9	45.81	48.43	18.81	39.62	20.70	27.73
MW-10	49.77	52.43	29.77	32.66	22.65	29.78

* Wells completed as open hole in bedrock
[1] Elevations surveyed from an arbitrary 100 ft. mark on corner of transformer cement pad.
[2] Depth of well measured from top of casing
[3] Static water levels measured from the top of casing

Compound	Location										State Standard
	MW-1	MW-2	MW-4	MW-5	MW-6	MW-7	MW-8	MW-9	MW-10	Supply	
Trichloroethylene	BQL	130	3860	8020	BQL	47	BQL	4300	240	BQL	2.8
1,2 dichloroethylene	BQL	BQL	BQL	BQL	BQL	BQL	BQL	99	1400	BQL	MDL
Vinyl Chloride	BQL	BQL	BQL	BQL	BQL	BQL	BQL	BQL	18	BQL	0.015

Notes:

	–	110	1500	5900	–	3.5	–	4200	170
	–	44	850						

Results presented in parts per billion (ppb)
BQL – Below Quantitation Limit
MDL – Method Detection Limit
Shaded areas represent concentrations over State Standard

cis+trans

C:\123R23\GIRMEST2.WK1

TABLE 3
SUMMARY OF OIL AND GREASE RESULTS

Location	Depth ft.	Oil and Grease Analyses	SSE Clean-up Standard
B-1	4.0'	1240	1,400
B-2	4.0'	28,300	1,400
B-3	6.0'	190	1,400
B-4	6.0'	70	1,400
B-5	5.5'	160	1,400
SW-1	4.0'	2,100	1,400
SW-2	4.0'	250	1,400

Notes:

Results presented in parts per million (ppm)
Oil & Grease concentrations determined by SW-846 Method 9071

C:\123R23\GIRMESTB.WK1

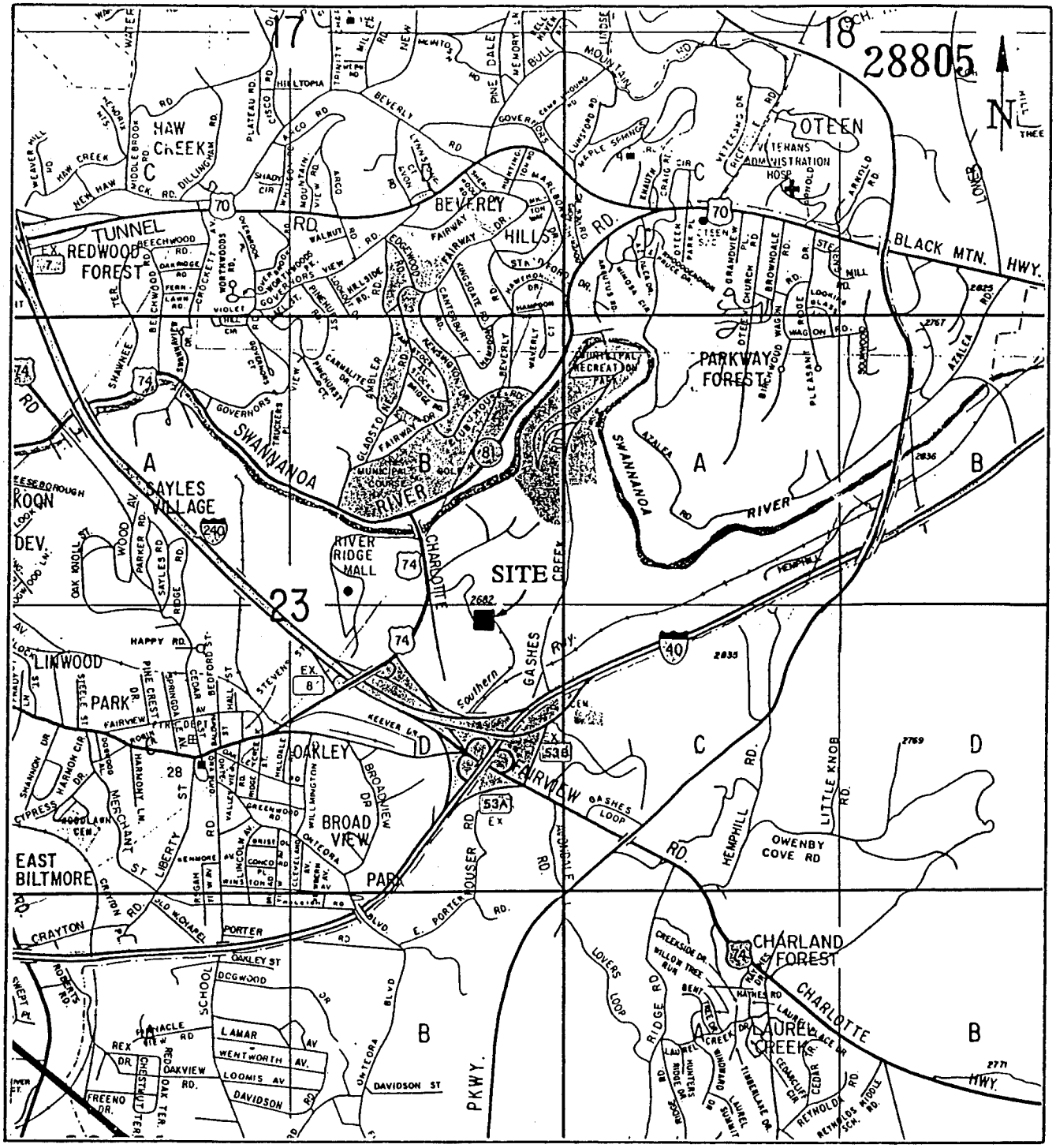

TAKEN FROM ASHEVILLE, NC CITY MAP

1000 0 2000 3000

SCALE IN FEET

J.L. de BALL GIRMES OF AMERICA

BAIN, PALMER & ASSOCIATES, INC.

SITE LOCATION MAP

FIGURE 1

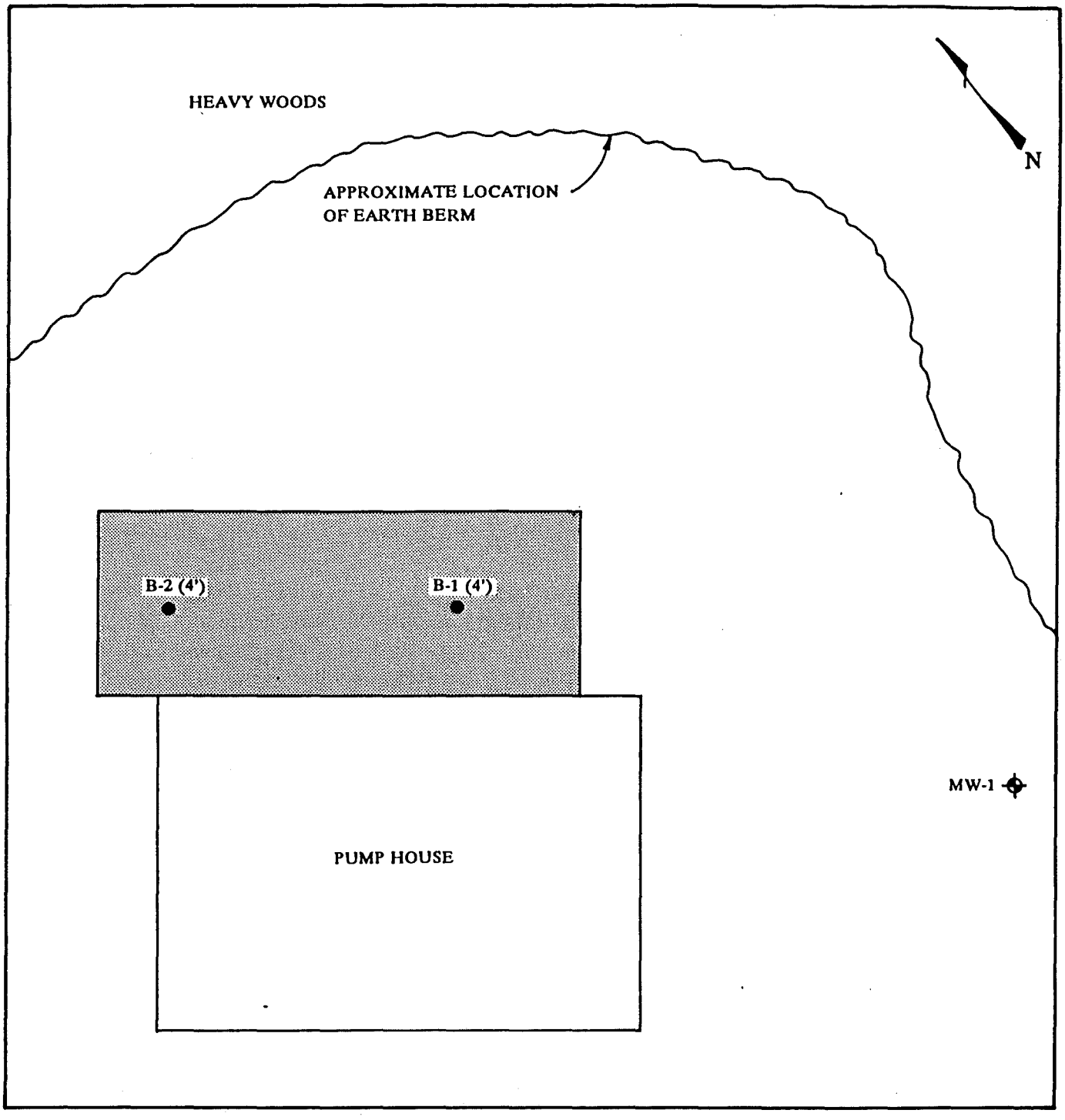

EXPLANATION

- ● BOTTOM SAMPLE
- ⊕ MONITORING WELL
- (3') DEPTH OF SAMPLE
- EXTENT OF EXCAVATION

2 0 4 6
SCALE IN FEET

J.L. de BALL GIRMES OF AMERICA

BAIN, PALMER & ASSOCIATES, INC.

DETAILED SITE MAP OF PUMP HOUSE AND SOIL SAMPLING LOCATIONS

FIGURE 5

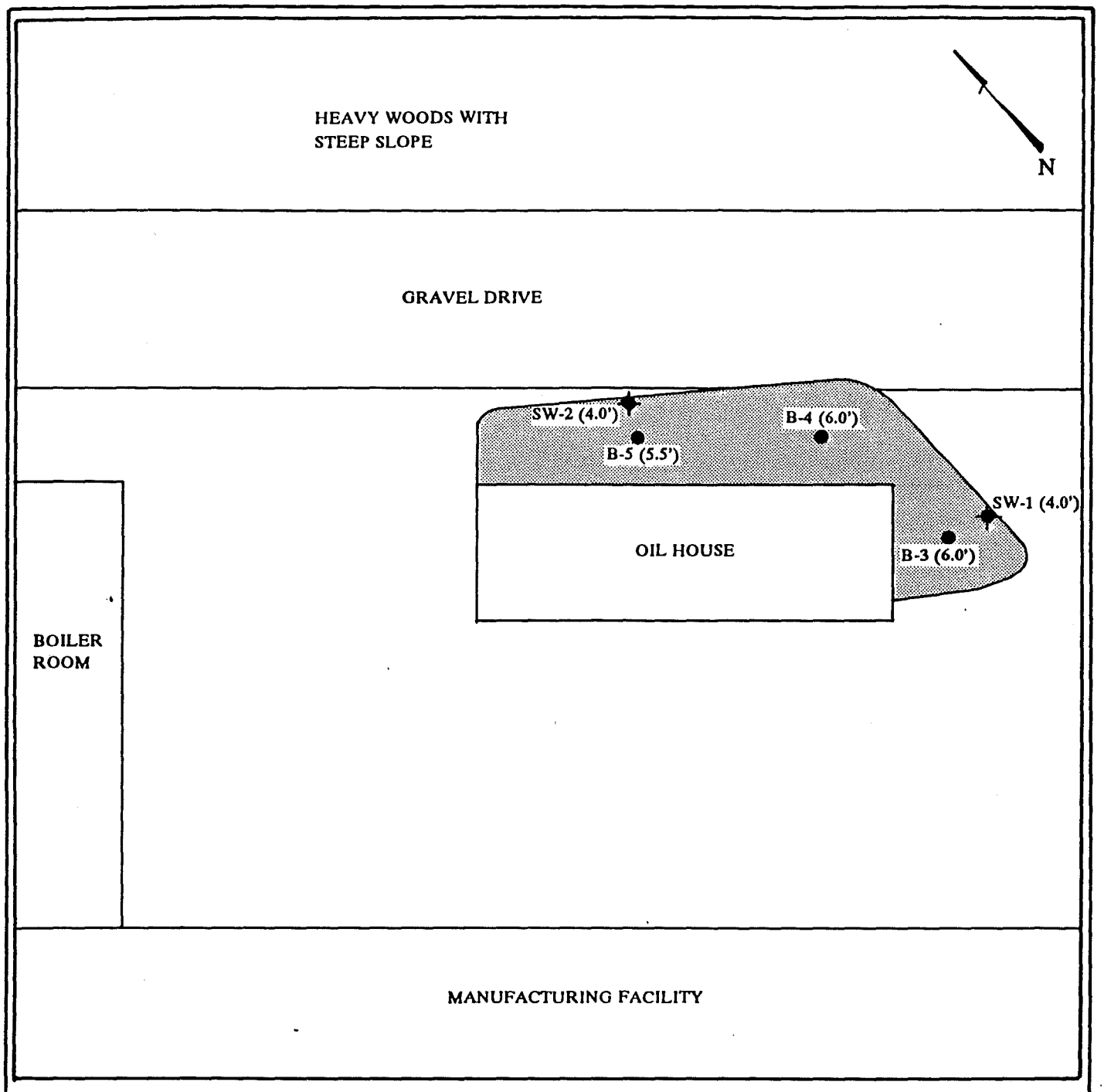

EXPLANATION

SIDE WALL SAMPLE

BOTTOM SAMPLE

(4.0') DEPTH OF SAMPLE

EXTENT OF EXCAVATION

5 0 10 15

SCALE IN FEET

J.L. de BALL GIRMES OF AMERICA

BAIN, PALMER & ASSOCIATES, INC.

DETAILED SITE MAP OF OIL HOUSE AND SAMPLING LOCATIONS

FIGURE 6

APPENDIX A

SOIL BORING LOGS

BAIN, PALMER & ASSOCIATES, INC.
Environmental Consultants

Client J.L. DE BALL GIRMES OF AMERICA, INC. Boring No. MW-4
Project GIRMES/ASHEVILLE Driller GROUNDWATER PROTECTION
Total Depth 82 FT. Elevation 98.72 Boring Type & Size 9 7/8" and 5 7/8 " Air Hammer
Date Started 2-1-93 Date Ended 2-3-93 Logged By KEN VANHOY
Depth to Water 60.4 Date Measured 2-12-93 Water Level Elevation 38.34

DEPTH (FEET)	ELEVATION FT AMSL	BLOWS PER 6 IN.	PERCENT RECOVERY	UNIFIED CLASS.	LITHOLOGIC DESCRIPTION	REMARKS
				ML	1.5 ft of crusher run Brown, micaceous sandy silt with 25% rock fragments, fill?	OVA = 1.0 ppm
5				ML	Brown, micaceous sandy silt with 15-20% rock fragments, fill/saprolite?	OVA = 2.0
10				ML	Same as above	OVA = 1.5
15						
20				ML	Brown, micaceous sandy silt to 24 ft., saprolite Bedrock encountered at 24 ft.	
25				SM	Tan to gray sand with a little silt from 24-30 ft.	
30				SM	Brown, tan silty sand, bedrock	OVA = 1.0
35						
40				SM	Gray, tan sand, bedrock, very dusty	OVA = 0.8
45						
50						

BAIN, PALMER & ASSOCIATES, INC.
Environmental Consultants

Client J.L. DE BALL GIRMES OF AMERICA, INC. Boring No. MW-4
Project GIRMES/ASHEVILLE Driller GROUNDWATER PROTECTION
Total Depth 82 FT. Elevation 98.72 Boring Type & Size 9 7/8" and 5 7/8 " Air Hammer
Date Started 2-1-93 Date Ended 2-3-93 Logged By KEN VANHOY
Depth to Water 60.4 Date Measured 2-12-93 Water Level Elevation 38.34

DEPTH (FEET)	ELEVATION FT AMSL	BLOWS PER 6 IN.	PERCENT RECOVERY	UNIFIED CLASS.	LITHOLOGIC DESCRIPTION	REMARKS
55				SM	Tan, sand with a little silt, bedrock, non dusty	OVA = 0.4
60				SM	Gray, tan, sand, bedrock, non dusty	OVA = 0.4
65						
70				SM	Gray, sand, bedrock, very dusty	OVA = 0.5
75						
80						
85					Note: Boring terminated at 82.0 ft. All samples taken from air hammer cuttings	
90						
95						
100						

BAIN, PALMER & ASSOCIATES, INC.
Environmental Consultants

Client J.L. DE BALL GIRMES OF AMERICA, INC. Boring No. MW-5
Project GIRMES/ASHEVILLE Driller GROUNDWATER PROTECTION
Total Depth 73 FT. Elevation 97.45 Boring Type & Size 9 7/8" and 5 7/8 " Air Hammer
Date Started 2-2-93 Date Ended 2-3-93 Logged By KEN VANHOY
Depth to Water 62.82 Date Measured 2-12-93 Water Level Elevation 34.63

DEPTH (FEET)	ELEVATION FT AMSL	BLOWS PER 6 IN.	PERCENT RECOVERY	UNIFIED CLASS.	LITHOLOGIC DESCRIPTION	REMARKS
				ML	Brown, micaceous sandy silt	
5						
10						
15						
20						
25						
					Bedrock encountered at 28.0 ft.	
30				SM	Tan sand with a little mica and silt bedrock	OVA = 1.0 ppm
35				SM	Same as above	OVA = 1.0
40				SM	Same as above	OVA = 0.6
45						
50						

BAIN, PALMER & ASSOCIATES, INC.
Environmental Consultants

Client J.L. DE BALL GIRMES OF AMERICA, INC. Boring No. MW-5
Project GIRMES/ASHEVILLE Driller GROUNDWATER PROTECTION
Total Depth 73 FT. Elevation 97.45 Boring Type & Size 9 7/8" and 5 7/8 " Air Hammer
Date Started 2-2-93 Date Ended 2-3-93 Logged By KEN VANHOY
Depth to Water 62.82 Date Measured 2-12-93 Water Level Elevation 34.63

DEPTH (FEET)	ELEVATION FT AMSL	BLOWS PER 6 IN.	PERCENT RECOVERY	UNIFIED CLASS.	LITHOLOGIC DESCRIPTION	REMARKS
				SM	Tan sand with a little mica and silt, bedrock	OVA = 0.5
55						
60				SM	Same as above	OVA = 0.3
65						
70				SM	Same as above	OVA = 0.9
75					Note: Boring terminated at 73.0 ft. All samples taken from air hammer cuttings	
80						
85						
90						
95						
100						

BAIN, PALMER & ASSOCIATES, INC.
Environmental Consultants

Client J.L. DE BALL GIRMES OF AMERICA, INC. Boring No. MW-6
Project GIRMES/ASHEVILLE Driller GROUNDWATER PROTECTION
Total Depth 50 FT. Elevation 75.97 Boring Type & Size 4¼ I.D. HSA
Date Started 2-8-93 Date Ended 2-9-93 Logged By KEN VANHOY
Depth to Water 40.7 Date Measured 2-12-93 Water Level Elevation 35.27

DEPTH (FEET)	ELEVATION FT AMSL	BLOWS PER 6 IN.	PERCENT RECOVERY	UNIFIED CLASS.	LITHOLOGIC DESCRIPTION	REMARKS
				ML	Brown, reddish-brown, silt with trace rock fragments, residual soil	OVA = 1.4 ppm
5				ML	Brown, silt with a little mica, residual soil/saprolite	OVA = 0.7
10				ML	Brown, silt with a little mica, saprolite	OVA = 0.8
15				ML	Same as above	OVA = 1.6
20				ML	Same as above	OVA = 1.2
25				ML	Same as above	OVA = 1.5
30				ML	Brown, silt with a little mica, trace schist rock fragments, saprolite	OVA = 1.5
35				ML	Same as above	OVA = 1.8
40				ML	Brown, silt with a little mica, trace schist rock fragments, saprolite, wet	OVA = 0.6
45				ML	Same as above	OVA = 1.4
50					Note: Boring terminated at 50.0 ft. All samples taken from drill cuttings	

BAIN, PALMER & ASSOCIATES, INC.

Environmental Consultants

Client J.L. DE BALL GIRMES OF AMERICA, INC. Boring No. MW-7

Project GIRMES/ASHEVILLE Driller GROUNDWATER PROTECTION

Total Depth 24.0 FT. Elevation 44.07 Boring Type & Size 4¼ I.D. HSA

Date Started 2-9-93 Date Ended 2-9-93 Logged By KEN VANHOY

Depth to Water 15.08 Date Measured 2-12-93 Water Level Elevation 28.99

DEPTH (FEET)	ELEVATION FT AMSL	BLOWS PER 6 IN.	PERCENT RECOVERY	UNIFIED CLASS.	LITHOLOGIC DESCRIPTION	REMARKS
				ML	Brown, silt, residual soil	OVA = 0.6
5				ML	Brown, micaceous silt, residual soil/saprolite	OVA = 0.4
10				ML	Brown, micaceous silt, residual soil/saprolite, very damp	OVA = 0.8
15				ML	Same as above	OVA = 0.3
20				ML	Same as above	OVA = 0.3
25					Note: Boring terminated at 24.0 ft. All samples taken from drill cuttings	
30						
35						
40						
45						
50						

BAIN, PALMER & ASSOCIATES, INC.
Environmental Consultants

Client J.L. DE BALL GIRMES OF AMERICA, INC. Boring No. MW-8
Project GIRMES/ASHEVILLE Driller GROUNDWATER PROTECTION
Total Depth 28 FT. Elevation 49.48 Boring Type & Size 4¼ I.D. HSA
Date Started 2-11-93 Date Ended 2-11-93 Logged By KEN VANHOY
Depth to Water 20.85 Date Measured 2-12-93 Water Level Elevation 28.63

DEPTH (FEET)	ELEVATION FT AMSL	BLOWS PER 6 IN.	PERCENT RECOVERY	UNIFIED CLASS.	LITHOLOGIC DESCRIPTION	REMARKS
				CL/ ML	Tan, sandy, silty clay, residual soil, damp	OVA = 1.2 ppm
5				ML	Tan, micaceous silt, with a little clay and sand, saprolite	OVA = 0.8
10				ML	Same as above	OVA = 1.0
15				ML	Tan, gray, micaceous silt with a little clay and sand, saprolite	OVA = 1.1
20				ML	Same as above	OVA = 0.8
25				ML/ CL	Tan, gray, micaceous clayey silt with a little sand, saprolite, wet	OVA = 0.4
30					Note: Boring terminated at 28.0 ft. All samples taken from drill cuttings	
35						
40						
45						
50						

BAIN, PALMER & ASSOCIATES, INC.

Environmental Consultants

Client J.L. DE BALL GIRMES OF AMERICA, INC. Boring No. MW-9

Project GIRMES/ASHEVILLE Driller GROUNDWATER PROTECTION

Total Depth 37 FT. Elevation 45.81 Boring Type & Size 4¼ I.D. HSA

Date Started 2-11-93 Date Ended 2-11-93 Logged By KEN VANHOY

Depth to Water 18.08 Date Measured 2-12-93 Water Level Elevation 27.73

DEPTH (FEET)	ELEVATION FT AMSL	BLOWS PER 6 IN.	PERCENT RECOVERY	UNIFIED CLASS.	LITHOLOGIC DESCRIPTION	REMARKS
				ML	Brown, clayey sandy silt with a trace of rock fragments, residual soil, damp	OVA = 1.4 ppm
5				ML	Tan, micaceous silt, residual soil/saprolite, damp	OVA = 0.6
10				ML	Tan, sandy silt with a trace of gravel (¼" - ½"), residual soil/ saprolite	OVA = 0.5
15				ML	Tan, sandy silt with 25% gravel, saprolite	OVA = 0.5
20				ML	Same as above	OVA = 0.4
25				ML	Brown, tan, micaceous sandy silt, saprolite	OVA = 0.2
30				ML	Brown, sandy silt, saprolite	OVA = 0.2
35				ML	Brown, micaceous clayey silt, wet	OVA = 0.1
40					Note: Boring terminated at 37.0 ft. All samples taken from drill cuttings	
45						
50						

BAIN, PALMER & ASSOCIATES, INC.

Environmental Consultants

Client J.L. DE BALL GIRMES OF AMERICA, INC. Boring No. MW-10

Project GIRMES/ASHEVILLE Driller GROUNDWATER PROTECTION

Total Depth 30 FT. Elevation 49.97 Boring Type & Size 4¼ I.D. HSA

Date Started 2-11-93 Date Ended 2-11-93 Logged By KEN VANHOY

Depth to Water 20.19 Date Measured 2-12-93 Water Level Elevation 29.78

DEPTH (FEET)	ELEVATION FT AMSL	BLOWS PER 6 IN.	PERCENT RECOVERY	UNIFIED CLASS.	LITHOLOGIC DESCRIPTION	REMARKS
				ML	Brown, tan, micaceous silt, residual soil, damp	OVA = 1.5 ppm
5				ML	Tan, sandy, micaceous silt, with a little gravel/rock fragments, residual soil/saprolite	OVA = 1.0
10				SM	Tan, micaceous silty sand, saprolite	OVA = 2.5
15				SM	Tan, micaceous silty sand with trace rock fragments, saprolite	OVA = 0.6
20				ML	Brown, sandy silt with trace rock fragments, saprolite	OVA = 0.5
25				ML	Same as above	OVA = 0.4
30					Note: Auger refusal at 30.0 ft. All samples taken from drill cuttings	
35						
40						
45						
50						

APPENDIX B

WELL CONSTRUCTION DIAGRAMS

BAIN, PALMER & ASSOCIATES, INC.

MONITORING WELL INSTALLATION SKETCH

Project J.L. de Ball Girmes
Surveyed by Bain, Palmer & Assoc.
Surveyed from Arbitary 100 ft.
Elevation of ground surface 98.72 ft.
Elevation of top of well pipe 98.34 ft.

Well Number MW-4
Constructed on 02/03/93
Depth to water measured from top of well pipe 60.00 ft.
Water level elevation 38.34 ft.
Water level taken on 02/12/93

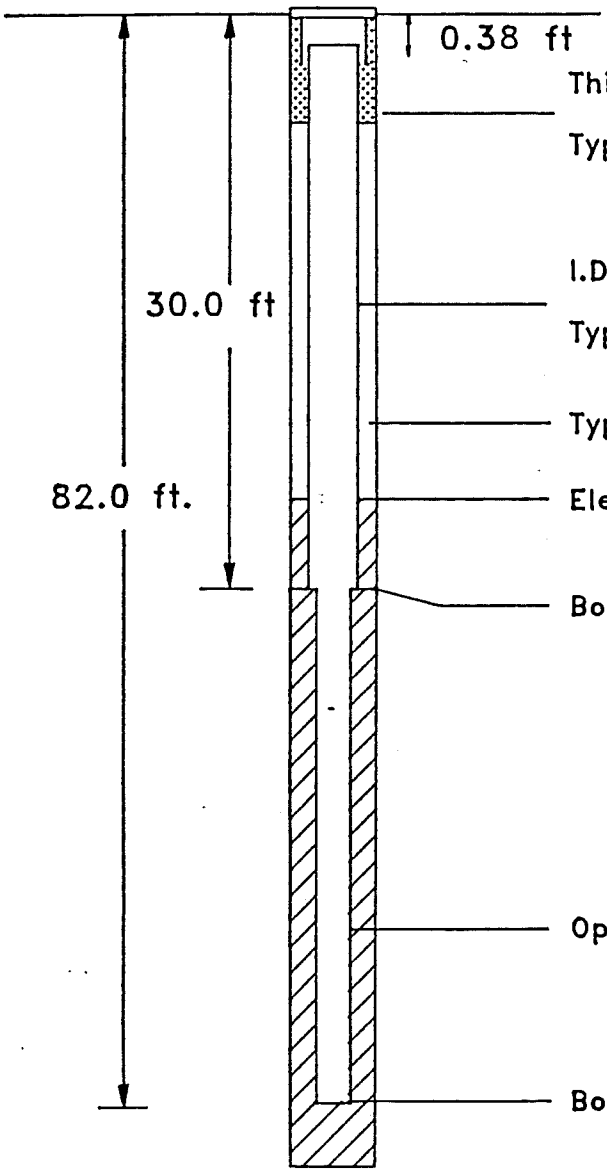

Thickness of surface seal 1.0 ft.
Type of surface seal cement

I.D. of riser pipe 6 1/4 in.
Type of riser pipe PVC

Type of backfill cement/bentonite grout

Elevation of top of rock 74.72 ft.

Bottom elevation of casing 68.72 ft.

Open hole diameter 5 7/8 in.

Bottom elevation of well 16.72 ft.

BAIN, PALMER & ASSOCIATES, INC.

MONITORING WELL INSTALLATION SKETCH

Project J.L. de Ball Girmes
Surveyed by Bain, Palmer & Assoc.
Surveyed from Arbitary 100 ft.
Elevation of ground surface 97.45 ft.
Elevation of top of well pipe 97.38 ft.

Well Number MW-5
Constructed on 02/03/93
Depth to water measured from top of well pipe 62.75 ft.
Water level elevation 34.63 ft.
Water level taken on 02/12/93

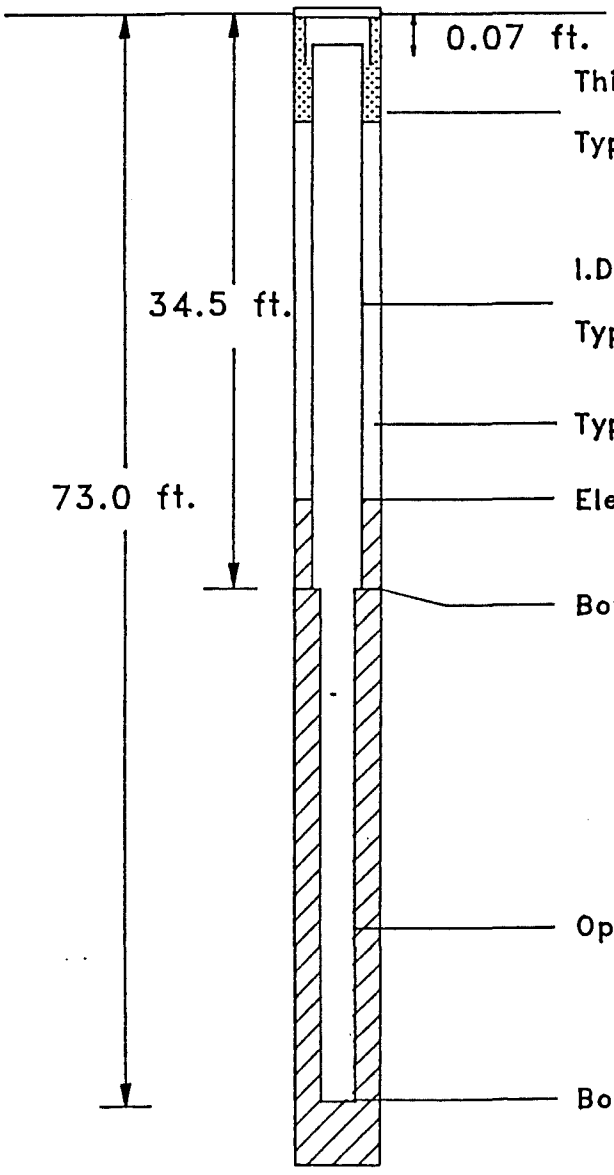

Thickness of surface seal 1.0 ft.
Type of surface seal cement

I.D. of riser pipe 6 1/4 in.
Type of riser pipe PVC

Type of backfill cement/bentonite grout

Elevation of top of rock 69.45 ft.

Bottom elevation of casing 62.95 ft.

Open hole diameter 5 7/8 in.

Bottom elevation of well 24.45 ft.

BAIN, PALMER & ASSOCIATES, INC.

MONITORING WELL INSTALLATION SKETCH*

Project J.L. de Ball Girmes
Surveyed by Bain, Palmer & Assoc.
Surveyed from Arbitary 100 ft.
Elevation of concrete pad reference 75.97 ft.
Elevation of top of well pipe 78.37 ft.

Well Number MW-6
Constructed on 02/09/93
Depth to water measured from top of well pipe 43.10 ft.
Water level elevation 35.27 ft.
Water level taken on 02/12/93

* NOTE: Drawing not to scale.

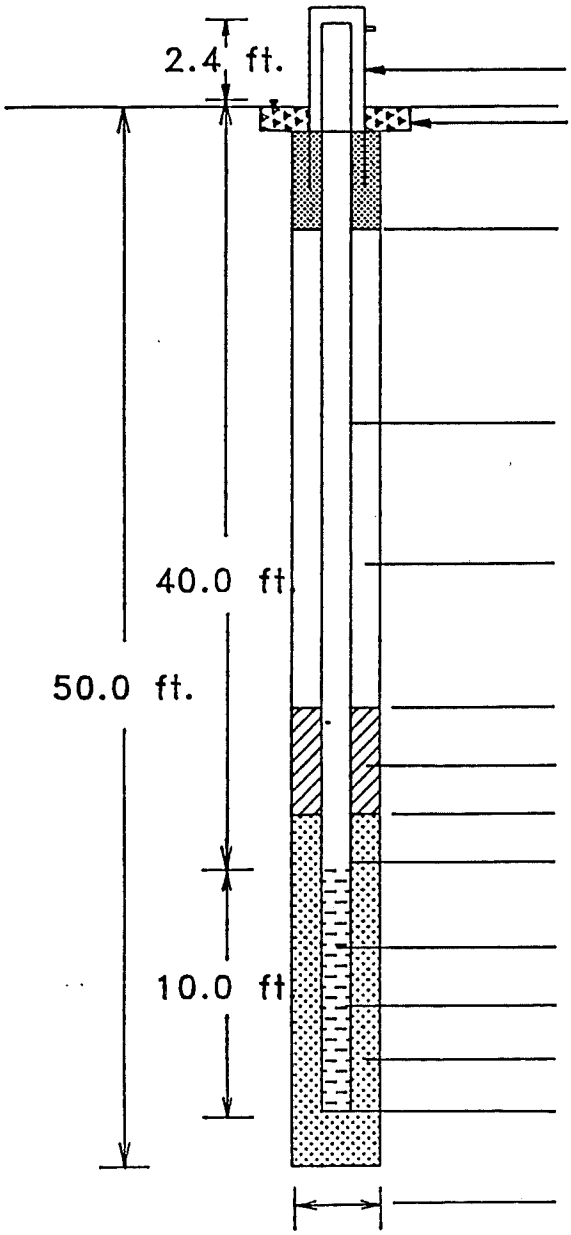

Protective casing	
Concrete pad	
Thickness of surface seal	6 in.
Type of surface seal	concrete
I.D. of riser pipe	2 in.
Type of riser pipe	Stainless steel & PVC
Type of backfill	cement/bentonite grout
Elevation of top of seal	45.97 ft.
Type of seal	bentonite
Top elevation of filter pack	43.97 ft.
Top elevation of screen	35.97 ft.
Size of screen openings	0.010 in.
Well screen diameter	2 in.
Type of filter pack	clean sand
Bottom elevation of well	25.97 ft.
Diameter of borehole	8 in.

BAIN, PALMER & ASSOCIATES, INC.

MONITORING WELL INSTALLATION SKETCH*

Project J.L. de Ball Girmes

Surveyed by Bain, Palmer & Assoc.

Surveyed from Arbitary 100 ft.

Elevation of concrete pad reference 44.07 ft.

Elevation of top of well pipe 47.31 ft.

Well Number MW-7

Constructed on 02/09/93

Depth to water measured from top of well pipe 18.32 ft.

Water level elevation 28.99 ft.

Water level taken on 02/12/93

* NOTE: Drawing not to scale.

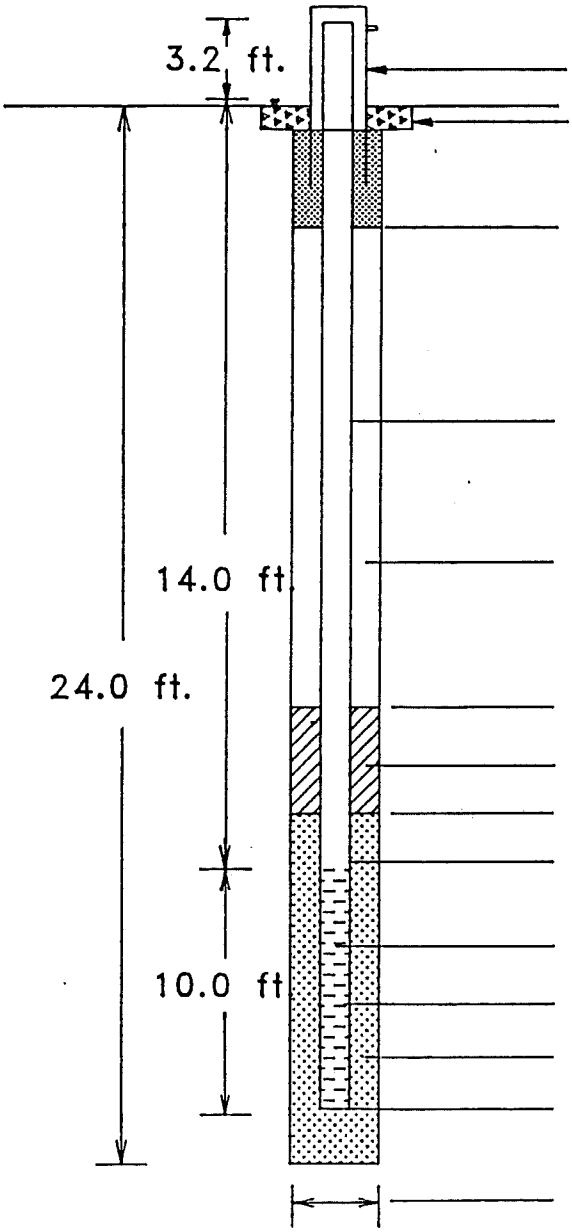

Protective casing	
Concrete pad	
Thickness of surface seal	6 in.
Type of surface seal	concrete
I.D. of riser pipe	2 in.
Type of riser pipe	Stainless steel & PVC
Type of backfill	cement/bentonite grout
Elevation of top of seal	34.07 ft.
Type of seal	bentonite
Top elevation of filter pack	32.07 ft.
Top elevation of screen	30.07 ft.
Size of screen openings	0.010 in.
Well screen diameter	2 in.
Type of filter pack	clean sand
Bottom elevation of well	20.07 ft.
Diameter of borehole	8 in.

BAIN, PALMER & ASSOCIATES, INC.

MONITORING WELL INSTALLATION SKETCH*

Project J.L. de Ball Girmes

Surveyed by Bain, Palmer & Assoc.

Surveyed from Arbitary 100 ft.

Elevation of concrete pad reference 49.48 ft.

Elevation of top of well pipe 51.37 ft.

Well Number MW-8

Constructed on 02/11/93

Depth to water measured from top of well pipe 22.74 ft.

Water level elevation 28.63 ft.

Water level taken on 02/12/93

* NOTE: Drawing not to scale.

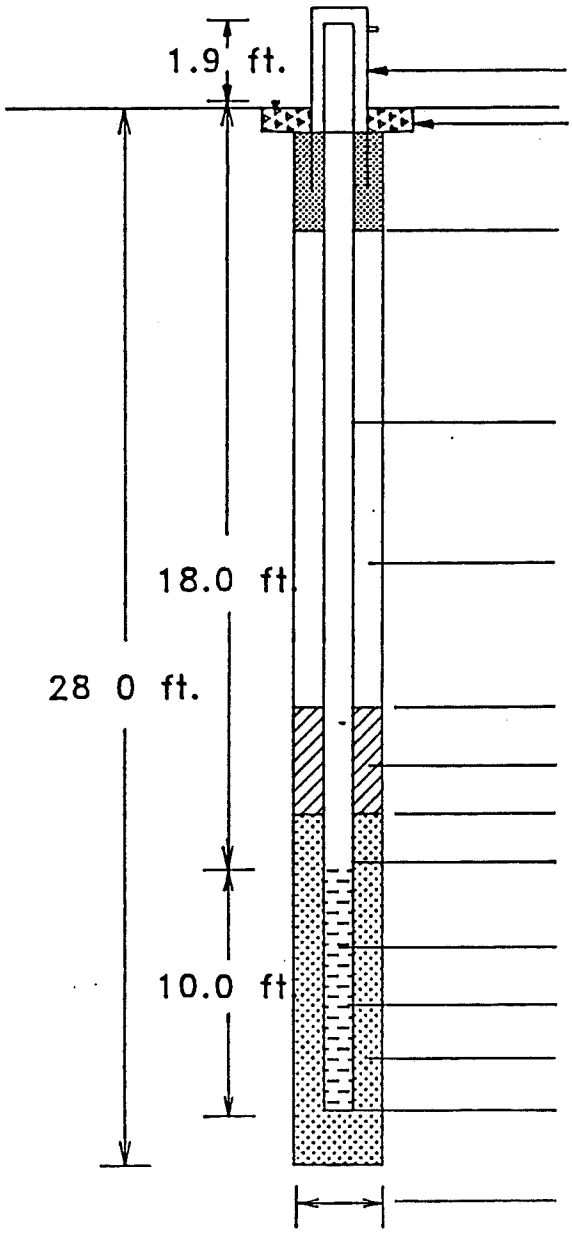

Protective casing

Concrete pad

Thickness of surface seal 6 in.

Type of surface seal concrete

I.D. of riser pipe 2 in.

Type of riser pipe Stainless steel & PVC

Type of backfill cement/bentonite grout

Elevation of top of seal 34.98 ft.

Type of seal bentonite

Top elevation of filter pack 33.48 ft.

Top elevation of screen 31.48 ft.

Size of screen openings 0.010 in.

Well screen diameter 2 in.

Type of filter pack clean sand

Bottom elevation of well 21.48 ft.

Diameter of borehole 8 in.

BAIN, PALMER & ASSOCIATES, INC.

MONITORING WELL INSTALLATION SKETCH*

Project J.L. de Ball Girmes

Surveyed by Bain, Palmer & Assoc.

Surveyed from Arbitary 100 ft.

Elevation of concrete pad reference 45.81 ft.

Elevation of top of well pipe 48.43 ft.

Well Number MW-9

Constructed on 02/11/93

Depth to water measured from top of well pipe 20.70 ft.

Water level elevation 27.73 ft.

Water level taken on 02/12/93

* NOTE: Drawing not to scale.

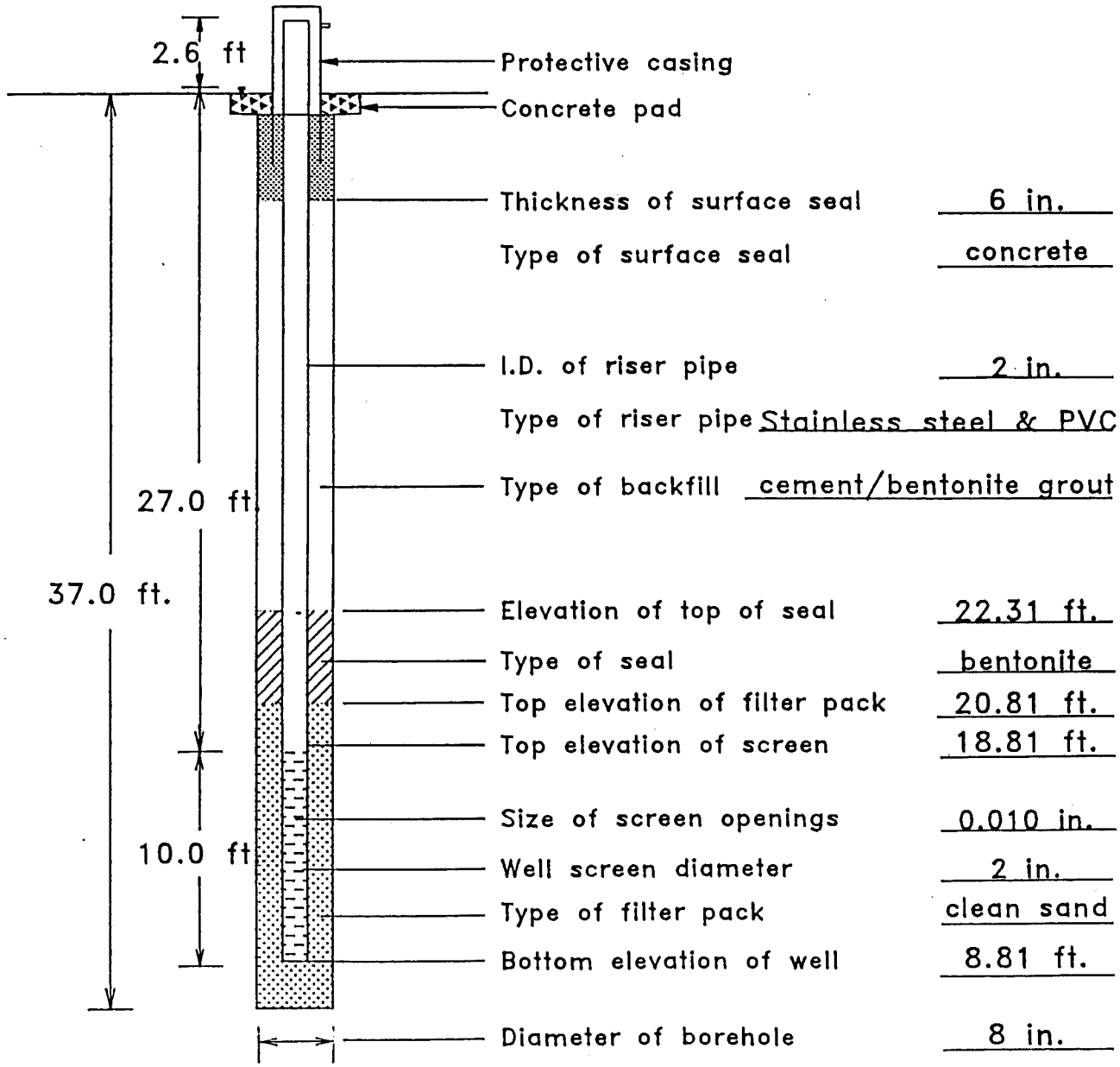

BAIN, PALMER & ASSOCIATES, INC.

MONITORING WELL INSTALLATION SKETCH*

Project J.L. de Ball Girmes
Surveyed by Bain, Palmer & Assoc.
Surveyed from Arbitary 100 ft.
Elevation of concrete pad reference 49.77 ft.
Elevation of top of well pipe 52.43 ft.

Well Number MW-10
Constructed on 02/11/93
Depth to water measured from top of well pipe 22.65 ft.
Water level elevation 29.78 ft.
Water level taken on 02/12/93

* NOTE: Drawing not to scale.

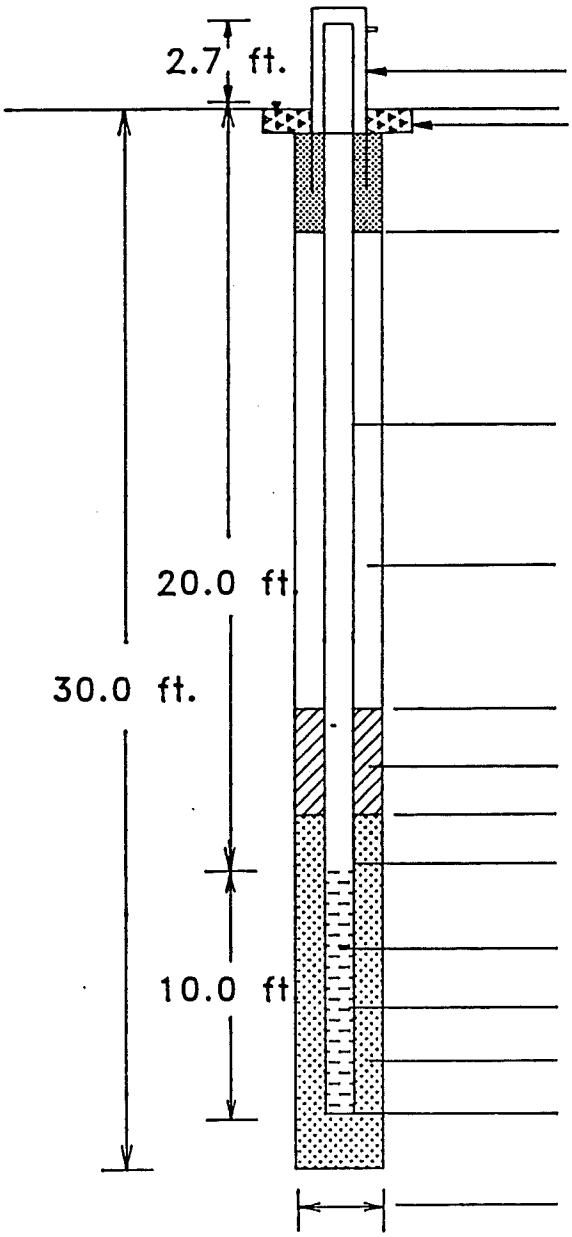

Protective casing	
Concrete pad	
Thickness of surface seal	6 in.
Type of surface seal	concrete
I.D. of riser pipe	2 in.
Type of riser pipe	Stainless steel & PVC
Type of backfill	cement/bentonite grout
Elevation of top of seal	32.77 ft.
Type of seal	bentonite
Top elevation of filter pack	31.77 ft.
Top elevation of screen	29.77 ft.
Size of screen openings	0.010 in.
Well screen diameter	2 in.
Type of filter pack	clean sand
Bottom elevation of well	19.77 ft.
Diameter of borehole	8 in.

APPENDIX C

BAIN, PALMER & ASSOCIATES, INC. TECHNICAL STANDARDS (T/S-2, -4, -7, AND -9)

BAIN & PALMER, INC.

Technical Standard T/S-2

Chain-of-Custody Procedures

TABLE OF CONTENTS

1. PURPOSE 2

2. SCOPE 2

3. RESPONSIBILITY 2

4. SUPPORTING PROCEDURES 2

5. REQUIRED FORMS 2

6. PROCEDURE 2

Chain of Custody Form 3

1. PURPOSE

To provide the program manager with a record of custody for any test pit soil, ground water, bore hole soil, surface water, surface soil, sediment or waste sample from time of collection to final analysis. After a sample has been submitted to the laboratory, a laboratory chain-of-custody will be prepared and the field form filed. When a sample is submitted to an outside laboratory, the original chain-of-custody form will be expected to remain with the samples.

2. SCOPE

This procedure details how a sample can be traced through the Chain-of-Custody Record.

3. RESPONSIBILITY

Project Manager or his designate.

4. SUPPORTING PROCEDURES

None.

5. REQUIRED FORMS

Chain-of-Custody Record.

6. PROCEDURE

This procedure describes the use of the Chain-of-Custody Record to

accompany all sample containers from the time of collection to the time of submission to the analytical laboratory.

Chain-of-Custody Record

A chain of custody record will accompany each group of samples which are collected for laboratory analysis (see attached form). The purpose of this form is to document the transfer of samples from the sampling location to the laboratory and thereby assure that no samples are lost or mislabeled. One person will be responsible for maintaining the samples at any given time. During shipment, both the person relinquishing the samples to the shipper and the person receiving the samples from the shipper will sign the chain-of-custody form and enter the time and date of transfer. Responsibility for the samples will then pass to the receiver.

CHAIN OF CUSTODY FORM

N ...83

PROJECT NO.: 0014.007

PROJECT NAME: West Hill

SAMPLERS (SIGNATURE): John E. Palmer

SAMPLE NO.*	DATE	TIME	COMP	GRAB	NO. OF CONTAINERS	1 Liter Amber Glass PRSV. none	1 Liter Plastic PRSV. HNO_3	40 mL Vial PRSV. Sod. Thio.	PRSV.	PRSV.	PRSV.	REMARKS
NC-MW-15-120385	12/3/85	10:30		✓	6	3	1	2				Filtered 0.45 µm
NC-MW-15D-120385		11:00		✓	6	3	1	2				Filtered 0.45 µm
NC-MW-FB-120385		10:20		✓	6	3	1	2				
NC-SS-2-120385		14:40		✓	2	2						
NC-SS-FB-120385	↓	14:30		✓	2			2				
NC-SS-TB-120385	12/3/85	14:30	–	–	2			2				
NC-SW-6-120385	12/3/85	15:00		✓	6	3	1	2				not Filtered
					30							

*SOURCE CODES: Test Pit Soil...(TP) Boring Hole Soil...(BH) Surface Soil...(SS) Waste...(W) Ground Water...(GW) Surface Water...(SW) Sediment...(SD) Waste Water...(WW)

RELINQUISHED BY (SIGNATURE):	DATE/TIME:	RECEIVED BY (SIGNATURE):	RELINQUISHED BY (SIGNATURE):	DATE/TIME:	RECEIVED BY (SIGNATURE):
John E. Palmer	11/2/87 14:02	Beverly E. Stewarner	Beverly E. Stewarner	12/3/85 16:00	Waybill No. 395 59 6616 Federal Express
RELINQUISHED BY (SIGNATURE):	DATE/TIME:	RECEIVED BY (SIGNATURE):	RELINQUISHED BY (SIGNATURE):	DATE/TIME:	RECEIVED BY (SIGNATURE):
RELINQUISHED BY (SIGNATURE):	DATE/TIME:	RECEIVED FOR LABORATORY BY (SIGNATURE):	DATE/TIME:	REMARKS:	

Distribution: Original accompanies shipment; copy to coordinator field files.

4 of 5

Upon receipt of the samples at an outside laboratory, the original chain-of-custody form will be signed, dated, and returned to B&P for filing. An internal laboratory chain-of-custody form will be initiated which will accompany the samples until they are analyzed and disposed of. The form used for this internal chain-of-custody record will equal or exceed the requirements of that used by B&P.

Prepared by: John E. Palmer

Approved by: George L. Bai

BAIN & PALMER, INC.

Technical Standard T/S-4

Soil and Water Sample Preservation
Procedures

TABLE OF CONTENTS

1. PURPOSE 2

2. SCOPE 2

3. RESPONSIBILITY 2

4. SUPPORTING PROCEDURES 2

5. REQUIRED FORMS 2

6. PROCEDURE 2

TABLE 1 4

TABLE 2 5

TABLE 2 (Continued) 6

TABLE 2 (Continued) 7

Key To Table 2 Superscripts 8

1. PURPOSE

To establish a standard procedure for the collection of water, soil and hazardous waste samples that require chemical analysis.

2. SCOPE

This procedure is established to provide a set of standards which follow recommended EPA preservation techniques and holding times for various chemical groups.

3. RESPONSIBILITY

Field operations manager, field technicians, or their designee.

4. SUPPORTING PROCEDURES

T/S-5, Field Procedures for Collection of Surface Soil Samples.
T/S-6, Field Procedures for Collection of Surface Water and Sediment.
T/S-7, Field Procedures for Collection of Ground Water Samples.
T/S-9, Shipping Procedures for Water and Soil Samples.

5. REQUIRED FORMS

None.

6. PROCEDURE

All sample preservations will be done in the field as soon as possible after sample collection. In some instances, sample containers will be "pre-preserved" so that no additional preservation will be required. In the event that preservation is required, Bain & Palmer will use the following procedure:

1. For water samples requiring priority pollutant analysis, the procedures in Table 1 will be followed.

2. Soil and sediment samples* collected for priority pollutant analysis will be placed in a 1 liter glass jar with Teflon lined cap. All jars will be filled completely to avoid losing volatile organics. Samples will be held in insulated shipping containers and kept cool at a temperature of 4^0C until the time of analysis.
3. When samples are preserved in the field, the type of preservation will be listed on the label.
4. For water samples requiring conventional analysis, the collection, preservation and holding times as listed in Table 2 will be followed. Table 2 is from Methods for Chemical Analysis of Water and Wastes, EPA-600/4-79-020, revised according to Federal Register dated October 26, 1984.

* For additional information, consult the EPA "Test Methods for Evaluating Solid Waste, Physical/Chemical Methods", SW-846, 2nd ed.

TABLE I

RECOMMENDATION FOR SAMPLING AND PRESERVATION OF WATER SAMPLES FOR PRIORITY POLLUTANT ANALYSIS

Parameter	Sample Container	Preservative	Holding Time
Method 625 Base/Neutrals Acid Extractables	1 liter amber glass bottle with Teflon-lined cap	Cool to 4°C (add 80mg Sodium Thiosulfate per liter if residual chlorine is present)	7 days for extraction/40 days after extraction for analysis
Method 608 Organochlorine Pesticides and PCBs	1 liter amber glass bottle with Teflon-lined cap	Cool to 4°C (adjust pH between 5.0 and 9.0 with NaOH or N_2SO_4 if samples will not be extracted in 72 hours)	7 days for extraction/40 days after extraction for analysis
Method 624 Volatile Organics	40 ml glass vial with Teflon-lined septum	Cool to 4°C (If residual chlorine is present, add 10 mg Sodium Thiosulfate to the 40 ml vial before sampling)	7 days with just cooling or 14 days if preserved with HCl to a pH of 2
Flameless AAS Metals	1 liter plastic bottle	HNO_3 to pH <2	6 months
Cold Vapor Mercury	500 ml plastic bottle	HNO_3 to pH <2	28 days
Cyanide EPA 335	1 liter plastic or glass bottle	Cool to 4°C (add 10N NAOH to pH >12) (if residual chlorine is present add 0.6 grams or more of Ascorbic Acid)	ASAP after collection (14 days max)
Phenolics EPA 420	1 liter amber glass bottle with Teflon-lined cap	Cool to 4°C H_3PO_4 to pH <4 1 gram $CuSO_4$/liter	24 hours

TABLE 2

RECOMMENDATION FOR SAMPLING AND PRESERVATION OF SAMPLES ACCORDING TO MEASUREMENT[1]

Measurement	Vol. Req. (ml)	Container[2]	Preservative	Holding Time[3]
Physical Properties				
Color	50	P,G	Cool, 4°C	48 Hrs.
Conductance	100	P,G	Cool, 4°C	28 Days
Hardness	100	P,G	HNO_3 to pH<2	6 Mos.
Odor	200	G only	Cool, 4°C	24 Hrs.
pH	25	P,G	None Req.	Analyze Immediately
Residue				
Filterable	100	P,G	Cool, 4°C	7 Days
Non-Filterable	100	P,G	Cool, 4°C	7 Days
Total	100	P,G	Cool, 4°C	7 Days
Volatile	100	P,G	Cool, 4°C	7 Days
Settleable Matter	1000	P,G	Cool, 4°C	48 Hrs.
Temperature	1000	P,G	None Req.	Analyze Immediately
Turbidity	100	P,G	Cool, 4°C	48 Hrs.
Metals				
Dissolved	200	P,G	Filter on site HNO_3 to pH <2	6 Mos.
Suspended	200	P,G	Filter on site	6 Mos.[3]
Total	100	P,G	HNO_3 to pH <2	6 Mos.[5]
Chromium^{+6}	200	P,G	Cool, 4°C	24 Hrs.
Mercury Dissolved	100	P,G	Filter HNO_3 TO Ph <2	28 Days

TABLE 2 (Continued)

RECOMMENDATION FOR SAMPLING AND PRESERVATION OF SAMPLES ACCORDING TO MEASUREMENT[1]

Measurement	Vol. Req. (ml)	Container[2]	Preservative	Holding Time[3]
Total	100	P,G	HNO_3 to pH <2	28 Days
Inorganics, Non-Metallics				
Acidity	100	P,G	Cool, 4°C	14 Days
Alkalinity	100	P,G	Cool, 4°C	14 Days
Bromide	100	P,G	None Req.	28 Days
Chloride	50	P,G	None Req.	28 Days
Chlorine	200	P,G	None Req.	Analyze Immediately
Cyanides	500	P,G	Cool, 4°C NaOH to pH >12 0.6 q ascorbic acid[6]	14 Days
Fluoride	300	P,G	None Req.	28 Days
Iodide	100	P,G	Cool, 4°C	24 Hrs.
Nitrogen Ammonia	400	P,G	Cool, 4°C	28 Days
Kjeldahl, Total	500	P,G	Cool, 4°C H_2SO_4 to pH <2	28 Days
Nitrate plus Nitrite	100	P,G	Cool, 4°C H_2SO_4 to pH <2	28 Days
Nitrate	100	P,G	Cool, 4°C	48 Hrs.
Nitrite	50	P,G	Cool, 4°C	48 Hrs.
Dissolved Oxygen Probe	300	G bottle and top	None Req.	Analyze Immediately
Winkler	300	G bottle and top	Fix on site and store in dark	8 Hrs.

TABLE 2 (Continued)

RECOMMENDATION FOR SAMPLING AND PRESERVATION OF SAMPLES ACCORDING TO MEASUREMENT[1]

Measurement	Vol. Req. (ml)	Container[2]	Preservative	Holding Time[3]
Phosphorus				
Orthophosphate, Dissolved	50	P,G	Filter on site Cool, 4°C	48 Hrs
Hydrolyzable	50	P,G	Cool, 4°C H_2SO_4 to pH <2	28 Days
Total	50	P,G	Cool, 4°C H_2SO_4 to pH <2	28 Days
Total Dissolved	50	P,G	Filter on site Cool, 4°C H_2SO_4 to pH <2	24 Hrs.
Silica	50	P only	Cool, 4°C	28 Days
Sulfate	50	P,G	Cool, 4oC	28 Days
Sulfide	500	P,G	Cool, 4°C add 2 ml zinc acetate and NaoH to pH >9	7 Days
Sulfite	50	P,G	Not Reg.	Analyze Immediately
Organics				
BOD	1000	P,G	Cool, 4°C	48 Hrs.
COD	50	P,G	Cool, 4°C H_2SO_4 to pH <2	28 Days
Oil & Grease	1000	G only	Cool, 4°C H_2SO_4 to pH <2	28 Days
Organic carbon	25	P,G	Cool, 4°C H_2SO_4 or HCLo to pH <2	28 Days
Phenolics	500	G only	Cool, 4°C H_2SO_4 to pH <2	28 Days
MBAS (Methylene Blue Active Substances-Surfactants)	250	P,G	Cool, 4°C	48 Hrs.
NTA	50	P,G	Cool, 4°C	24 Hrs.

Key To Table 2 Superscripts

(1) More specific instructions for preservation and sampling are found with each procedure as detailed in this manual. A general discussion on sampling water and industrial wastewater may be found in ASTM, Part 31, p. 72-82 (1976), Method D-3370.

(2) Plastic (PL) or Glass (G). For metals, polyethylene with a polypropylene cap (no liner) is preferred.

(3) It should be pointed out that holding times listed above are recommended for properly preserved samples based on currently available data. It is recognized that for some sample types extension of these times may be possible, while for other types these times may be too long. Where shipping regulations prevent the use of the proper preservation technique or the holding time is exceeded, such as the case of a 24-hour composite, the final reported data for these samples should indicate the specific variance.

(4) If the sample is stabilized by cooling, it should be warmed to 25°C for reading, or temperature correction made and results reported at 25°C.

(5) Where HNO_3 cannot be used because of shipping restrictions, the sample may be initially preserved by icing and immediately shipped to the laboratory. Upon receipt in the laboratory, the sample must be acidified to a pH <2 with HNO_3 (normally 3 ml 1:1 HNO_3/liter is sufficient). At the time of analysis, the sample container should be thoroughly rinsed with 1:1 HNO_3 and the washings added to the sample (volume correction may be required).

(6) Data obtained from the National Enforcement Investigations Center-Denver, Colorado, support a four-week holding time for this parameter in Sewerage Systems (SIC 4952).

Prepared by _____ Approved by _____

BAIN & PALMER, INC.

Technical Standard T/S-7

Field Procedures For Collection of
Ground Water Samples

TABLE OF CONTENTS

1. PURPOSE 2

2. SCOPE 2

3. RESPONSIBILITY 2

4. SUPPORTING PROCEDURES 2

5. REQUIRED FORMS 2

6. PROCEDURE 2

6.1 Selection of Sampling Locations 2

6.2 Equipment List 3

6.3 Sample Collection 3

1. PURPOSE

To establish a standard procedure for collection of ground water samples.

2. SCOPE

The following procedure describes the logistics, collection techniques and documentation requirements for collecting ground water samples.

3. RESPONSIBILITY

Field Sampling Technicians, Field Supervisor, and Field Chemist.

4. SUPPORTING PROCEDURES

T/S-3	Cleaning of Glassware and Equipment for Field Sampling Programs.
T/S-2	Chain-of-Custody Procedures.
T/S-4	Recommendations for Water and Soil Sample Volumes, Preservatives and Holding Times.
T/S-8	Filtering of Water for Dissolved Metals Analysis.

5. REQUIRED FORMS

Chain of Custody forms.

6. PROCEDURE

6.1 Selection of Sampling Locations

Groundwater sampling locations in and around a contaminated site are typically existing domestic, production, and groundwater monitoring wells. The location of groundwater sampling points will be based upon the review of existing site geohydrological data, the results of preliminary site surveys, and the initial estimates of the extent of contamination. The groundwater sampling locations will be chosen by the project geologist/engineer. At a minimum, one upgradient and three downgradient samples from the uppermost aquifer will be taken.

6.2 Equipment List

1. Latex gloves and any other personal safety equipment specified in the Site Health and Safety Plan.

2. Sample containers. Number and kind will depend on the analytical requirements.

3. Device to measure water levels in wells to within 0.05 feet. Typically a fiberglass tape with a "plopper" or chalk, or an electronic water level indicator, is used.

4. Field notebook.

5. Sample bottle labels.

6. Chain-of-Custody forms.

7. A large volume bailer or pump to evacuate the wells.

8. Teflon bailer with stainless steel cable or a peristaltic pump with Teflon tubing.

9. 50-foot length of garden hose (needed only when sampling from domestic, production and other wells where the sample will be obtained from the existing well pump).

6.3 Sample Collection

Prior to the evacuation of groundwater from any well, the depth to water shall be measured to the nearest 0.01 feet. A fiberglass or steel tape marked with chalk or an electric water sensing device (e.g., Slope Indicator Water Mark) shall be used for this purpose. The device must be decontaminated to avoid contamination of the well. The depth to water is typically measured from a reference point established on the top of the inner well casing. This value is recorded in the field notebook along with the length of casing stick-up above the ground surface. If both an inner and outer casing are present, the one used as the measurement reference point shall be identified and the vertical distance between the two measured and recorded as well as the stick-up of the outer casing. If the depth of the well is unknown, the bottom shall be sounded and the depth recorded.

To introduce fresh formation water into the well, a minimum of four well volumes must be evacuated from the well prior to sampling. If a well is evacuated dry prior to removing four well volumes, the evacuation is considered complete and the well is allowed to recharge to at least 75% of its original volume prior to sampling. Field parameters (i.e., pH, specific conductance and temperature) may be measured periodically during well evacuation to aid in determining water stabilization. Evacuation is accomplished by bailing with a large volume (1.5 liter) bailer, or by pumping. Whichever method is used, it must be assured that any materials (hose, bailer, tubing, pumps, rope, etc.) entering the well be clean. If the same device is being used to evacuate a number of wells, the device must be cleaned with detergent, water, acetone and deionized water between each well to prevent cross-contamination.

The sampling procedure for groundwater is as follows:

1. Prior to collecting any water samples, place a waterproof sample label on each clean container with the following information:
   a. Bain & Palmer Project No.: _____ e.g. 0012.001
   b. Project Name _____ e.g. XYZ Corporation
   c. Sample No. X-W-10-41884

      where X - site initials, e.g., XYZ Site
      W - water
      10 - sampling location
      41184-date

   d. Analysis Required: _____ e.g. TOC
   e. Preservative: _____ e.g. ICED pH<2 H_2SO_4
   f. Collection Time: _____ e.g. 0930
   g. Date:: _____ e.g. 04-11-84
   h. Initials of Collector: _____e.g. JEP

   Fill in the information with a waterproof ink pen. This will prevent difficulty in filling out labels on a wet jar after it is filled.

2. Collect the groundwater sample using a clean Teflon bailer. latex gloves shall be worn during this procedure. The temperature, pH,

and conductivity of the evacuated water should be determined immediately after sample collection. These measurements should not be taken from any sample bottles being sent to the analytical laboratory for chemical analysis.

3. The vials for volatile organic analysis should always be filled with the initial bailer of water. When filling the 40 ml septum vials, care should be exercised to eliminate the formation of air bubbles. Slightly over-fill the vial, and screw on the cap. Then turn the vial upside down and tap lightly to check for air bubbles. Air bubbles of any size should not rise to the bottom of the vial. (Tiny bubbles can introduce significant error.) If air bubbles are present, empty the vial and repeat the procedure with a fresh bailer of water.

4. Fill all the remaining containers directly from the bailer, unless the well is to be sampled in duplicate. If a duplicate water sample is required, the water should be composited in a large clean container, prior to filling the sample bottles. Samples requiring volatile organic analysis should not be composited, however, an attempt should be made to fill all the vials with the initial bailer of water.

5. Avoid overflow of the bottles or jars already containing preservative (pre-preserved). All samples should be gently mixed after collection and checked for proper preservation with indicator paper (i.e. pH paper).

6. If dissolved metals analysis are required, an extra bottle (no preservative) will be filled and the metals container (pre-preserved with nitric acid) will remain empty. After the water sample is field filtered through a 0.45 micron membrane filter, transfer the water into the pre-preserved metals container. This will constitute a sample for dissolved metals analysis. See Bain & Palmer Technical

Standard No. 8, "Filtering of Water Samples for Dissolved Metals Analysis".

7. If samples have not been pre-preserved, preserve them as soon as possible after collection and preparation.

8. Place all sample containers into a shipping container, cool with ice packs and complete the chain-of-custody form.

9. Detail in the field notebook the following:
   - sample identification number
   - location of the sample
   - time and date of sampling
   - personnel performing task
   - depth to water table, reference mark, casing(s) stick-up, and vertical distance between inner and outer casing
   - Amount evacuated from well and device used for evacuation
   - Visual or sensory description of the sample (color, odor, turbidity, etc.)
   - Weather conditions both present and previous to sampling
   - Other pertinent observations
   - Sign the entry

10. Make sure the well is secured after sampling.

11. If sampling devices are to be dedicated to a particular sample location, they will be placed in a plastic bag after their use and marked or tagged:

    DEDICATED TO PROJECT NO. _____
    SAMPLE LOCATION NO. _____

    The tags should also indicate that the dedicated equipment needs cleaning before next use. Alternatively, the sampling devices can be left hanging in the well.

12. Field investigations requiring more than one sampling event should

12. Field investigations requiring more than one sampling event should include the use of a Master Sample Logbook and a Field Chemistry Notebook. At the end of each day all samples shall be recorded in the Master Logbook. Calibration of field instruments and field chemistry measurements such as pH shall be recorded in the Field Chemistry Notebook.

Prepared by John E. Palmer

Approved by George L. Ba

BAIN & PALMER, INC.

Technical Standard T/S-9

Shipping Procedures for Water and Soil
Samples Collected

TABLE OF CONTENTS

1. PURPOSE 2

2. SCOPE 2

3. RESPONSIBILITY 2

4. SUPPORTING PROCEDURES 2

5. REQUIRED FORMS 2

6. PROCEDURE 2

1. PURPOSE

To establish a standard procedure for the shipment of water, soil, and hazardous waste samples in order to avoid mishandling, shipment delays, and mislabeling of samples collected and shipped from a field site.

2. SCOPE

The procedure details the necessary arrangements required for a timely and safe delivery of samples to the analytical lab.

3. RESPONSIBILITY

Field supervisor or his designated task manager in charge of shipping.

4. SUPPORTING PROCEDURES

T/S-2 Chain-of-Custody Procedures.

5. REQUIRED FORMS

None.

6. PROCEDURE

1. Prior to mobilization to a field site, the field operations manager or his designee will select a shipper to handle the delivery of samples to the contract laboratory.
2. Upon selection of a shipper, the following information will be gathered before any samples are shipped.
   a. Location of the depot nearest the field operation in the case that samples are to be delivered directly to the depot by the field team.
   b. Name and phone number of a contact at the shipper.
   c. Rates of shipping per package size and weight.
   d. Special instructions as to container sizes and weights.
   e. A set of weigh bills for the field team.
   f. A copy of the shipper's brochure which will provide information

on the format for the various types of weigh bills.

g. Lead time necessary for calling in a pick-up from the job-site and normal pick-up times.

3. The B&P field manager will provide the shipper with a street address where samples can be picked up.

4. Once all samples have been collected, preserved and are ready for shipment, the field operations manager will call the shipper to arrange for pick-up of the samples or take to shipper's depot.

5. Unless designated for ground transportation, all samples will be shipped by air express for overnight delivery.

6. The following steps will be followed in the field to prepare the sample shipping containers for pick-up:

   a. A chain-of-custody form will be completed and protected in a ziploc bag, placed inside the shipping container.

   b. The B&P field operations manager or his designee will ensure that all weigh bills have been properly completed for air express and that the courier is informed that the samples must be sent air express. If the contract laboratory is within ground transportation distance for overnight delivery, then the weigh bills should reflect guaranteed overnight delivery.

   c. A copy of all weigh bills must be kept by the field operations manager and the weigh bill number associated with each group of samples logged into the Master Sample Log. The name of the courier must be written in this log, also, in case there is a problem in tracing samples.

7. Once the samples have been shipped, the field operations manager will call the contract laboratory and provide a listing of samples to be delivered, the shipper's name, and the weigh bill numbers. As soon as the samples are delivered, the contract laboratory should inform B&P of their arrival, including any damaged or missing sample containers.

Prepared by: John E. Palmer

Approved by: George T. Bar

APPENDIX D

GROUNDWATER SAMPLING FIELD DATA SHEETS

BAIN, PALMER & ASSOCIATES, INC.

Environmental Consultants

GROUNDWATER SAMPLING FIELD DATA

Location Girmes

Date February 3, 1993

Source/Well Supply Well

Time 1:00 to 1:30

Sampled by Ken Vanhoy

Weather Sunny, 50°

GROUNDWATER ELEVATION

1) Depth to water from measuring point 63.22 ft.

2) Depth to well bottom from measuring point + 150' ft.

3) Height of water column ? ft.

4) Measuring point description Top of Metal Casing

WELL PURGING AND SAMPLE COLLECTION

1) Volume of water in well
   a) 2" well . . . . (v = 0.163 x h)
   b) 4" well . . . . (v = 0.651 x h) ? gal.

2) Volume of water removed prior to sampling 6 gal.

3) Was well pumped DRY? (circle one) YES (NO)

FIELD ANALYSIS

1) Temperature 66.4°F

2) Specific Conductance 210 μMHOs

3) pH 7.50

4) Physical Appearance and Odor Grayish tinge, black specs in water, no noticeable volatile odors

BAIN, PALMER & ASSOCIATES, INC.

Environmental Consultants

GROUNDWATER SAMPLING FIELD DATA

Location Girmes

Date February 12, 1993

Source/Well MW-1

Time 2:00 to 2:15

Sampled by Ken Vanhoy

Weather Cloudy, 45°

GROUNDWATER ELEVATION

1) Depth to water from measuring point 57.06 ft.

2) Depth to well bottom from measuring point 70.0 ft.

3) Height of water column 12.94 ft.

4) Measuring point description Top of 2" PVC Casing

WELL PURGING AND SAMPLE COLLECTION

1) Volume of water in well
   a) 2" well . . . . (v = 0.163 x h)
   b) 4" well . . . . (v = 0.651 x h) 2.1 gal.

2) Volume of water removed prior to sampling 8.4 gal.

3) Was well pumped DRY? (circle one) YES (NO)

FIELD ANALYSIS

1) Temperature 55.8°F

2) Specific Conductance 135 μMHOs

3) pH 7.3

4) Physical Appearance and Odor Very silty, no odor, sample muddy, brown due to silt

BAIN, PALMER & ASSOCIATES, INC.

Environmental Consultants

GROUNDWATER SAMPLING FIELD DATA

Location Girmes

Date February 12, 1993

Source/Well MW-2

Time 2:30 to 3:00

Sampled by Ken Vanhoy

Weather Cloudy, 45°

GROUNDWATER ELEVATION

1) Depth to water from measuring point 20.85 ft.

2) Depth to well bottom from measuring point 30.0 ft.

3) Height of water column 9.15 ft.

4) Measuring point description Top of 2" PVC Casing

WELL PURGING AND SAMPLE COLLECTION

1) Volume of water in well
   a) 2" well . . . . (v = 0.163 x h)
   b) 4" well . . . . (v = 0.651 x h) 1.49 gal.

2) Volume of water removed prior to sampling 5.96 gal.

3) Was well pumped DRY? (circle one) YES NO

FIELD ANALYSIS

1) Temperature 52.7°F

2) Specific Conductance 93 μMHOs

3) pH 6.9

4) Physical Appearance and Odor Muddy, silty, no odor

BAIN, PALMER & ASSOCIATES, INC.

Environmental Consultants

GROUNDWATER SAMPLING FIELD DATA

Location Girmes

Date February 4, 1993

Source/Well MW-4

Time 12:30 to 1:00

Sampled by Ken Vanhoy

Weather Sunny, 50°

GROUNDWATER ELEVATION

1) Depth to water from measuring point 76.35 ft.

2) Depth to well bottom from measuring point 82.00 ft.

3) Height of water column 5.75 ft.

4) Measuring point description Top of 6 ¼ inch PVC Pit Casing

WELL PURGING AND SAMPLE COLLECTION

1) Volume of water in well
   a) 2" well . . . . (v = 0.163 x h)
   b) 4" well . . . . (v = 0.651 x h) 8.45 gal.
   c) 6" well . . . . (1.47 gal/ft)

2) Volume of water removed prior to sampling 25 gal.

3) Was well pumped DRY? (circle one) YES NO
   Twice with Air Rig

FIELD ANALYSIS

1) Temperature 56.4°F

2) Specific Conductance 980 μMHOs

3) pH 7.21

4) Physical Appearance and Odor Slightly cloudy, no odor

BAIN, PALMER & ASSOCIATES, INC.

Environmental Consultants

GROUNDWATER SAMPLING FIELD DATA

Location Girmes

Date February 4, 1993

Source/Well MW-5

Time 9:00 to 9:30

Sampled by Ken Vanhoy

Weather Sunny, 38°

GROUNDWATER ELEVATION

1) Depth to water from measuring point 62.95 ft.

2) Depth to well bottom from measuring point 73.0' ft.

3) Height of water column 10 ft.

4) Measuring point description Top of 6 ¼ inch PVC Pit Casing

WELL PURGING AND SAMPLE COLLECTION

1) Volume of water in well
   a) 2" well . . . . (v = 0.163 x h)
   b) 4" well . . . . (v = 0.651 x h) 15 gal.
   c) 6" well . . . . (1.47 gal/ft)

2) Volume of water removed prior to sampling 40 gal.

3) Was well pumped DRY? (circle one) YES NO
   Twice with Air Rig

FIELD ANALYSIS

1) Temperature 56.0°F

2) Specific Conductance 488 μMHOs

3) pH 6.90

4) Physical Appearance and Odor Slightly cloudy, no odor

BAIN, PALMER & ASSOCIATES, INC.

Environmental Consultants

GROUNDWATER SAMPLING FIELD DATA

Location Girmes

Date February 12, 1993

Source/Well MW-6

Time 3:00 to 3:30

Sampled by Ken Vanhoy

Weather Cloudy, 45°

GROUNDWATER ELEVATION

1) Depth to water from measuring point 43.15 ft.

2) Depth to well bottom from measuring point 52.4 ft.

3) Height of water column 9.25 ft.

4) Measuring point description Top of 2" PVC Casing

WELL PURGING AND SAMPLE COLLECTION

1) Volume of water in well
   a) 2" well . . . . (v = 0.163 x h)
   b) 4" well . . . . (v = 0.651 x h) 1.51 gal.

2) Volume of water removed prior to sampling 6.03 gal.

3) Was well pumped DRY? (circle one) YES (NO)

FIELD ANALYSIS

1) Temperature 52.4°F

2) Specific Conductance 51 μMHOs

3) pH 7.21

4) Physical Appearance and Odor Muddy, silty, no odor

BAIN, PALMER & ASSOCIATES, INC.

Environmental Consultants

GROUNDWATER SAMPLING FIELD DATA

Location Girmes

Date February 12, 1993

Source/Well MW-7

Time 1:00 to 1:15

Sampled by Ken Vanhoy

Weather Sunny, 50°

GROUNDWATER ELEVATION

1) Depth to water from measuring point 18.3 ft.

2) Depth to well bottom from measuring point 27.24 ft.

3) Height of water column 8.9 ft.

4) Measuring point description Top of 2" PVC Casing

WELL PURGING AND SAMPLE COLLECTION

1) Volume of water in well
   a) 2" well . . . . (v = 0.163 x h)
   b) 4" well . . . . (v = 0.651 x h) 1.45 gal.

2) Volume of water removed prior to sampling 5.8 gal.

3) Was well pumped DRY? (circle one) YES (NO)

FIELD ANALYSIS

1) Temperature 55.7°F

2) Specific Conductance 76 μMHOs

3) pH 7.12

4) Physical Appearance and Odor Muddy, silty, no odor

BAIN, PALMER & ASSOCIATES, INC.

Environmental Consultants

GROUNDWATER SAMPLING FIELD DATA

Location Girmes

Date February 12, 1993

Source/Well MW-8

Time 10:00 to 10:30

Sampled by Ken Vanhoy

Weather Cloudy, 45°

GROUNDWATER ELEVATION

1) Depth to water from measuring point 22.74 ft.

2) Depth to well bottom from measuring point 29.89 ft.

3) Height of water column 7.06 ft.

4) Measuring point description Top of 2" PVC Casing

WELL PURGING AND SAMPLE COLLECTION

1) Volume of water in well
   a) 2" well . . . . (v = 0.163 x h)
   b) 4" well . . . . (v = 0.651 x h) 1.15 gal.

2) Volume of water removed prior to sampling 4.60 gal.

3) Was well pumped DRY? (circle one) YES (NO)

FIELD ANALYSIS

1) Temperature 53.4°F

2) Specific Conductance 178 μMHOs

3) pH 6.8

4) Physical Appearance and Odor Cloudy, milky, no odor

BAIN, PALMER & ASSOCIATES, INC.

Environmental Consultants

GROUNDWATER SAMPLING FIELD DATA

Location Girmes

Date February 12, 1993

Source/Well MW-9

Time 11:00 to 11:30

Sampled by Ken Vanhoy

Weather Rain, 45°

GROUNDWATER ELEVATION

1) Depth to water from measuring point 20.7 ft.

2) Depth to well bottom from measuring point 39.62 ft.

3) Height of water column 18.9 ft.

4) Measuring point description Top of 2" PVC Casing

WELL PURGING AND SAMPLE COLLECTION

1) Volume of water in well
   a) 2" well . . . . (v = 0.163 x h)
   b) 4" well . . . . (v = 0.651 x h) 3.08 gal.

2) Volume of water removed prior to sampling 12.32 gal.

3) Was well pumped DRY? (circle one) YES (NO)

FIELD ANALYSIS

1) Temperature 55.6°F

2) Specific Conductance 160 μMHOs

3) pH 7.2

4) Physical Appearance and Odor Muddy, silty, no odor

BAIN, PALMER & ASSOCIATES, INC.

Environmental Consultants

GROUNDWATER SAMPLING FIELD DATA

Location Girmes

Date February 12, 1993

Source/Well MW-10

Time 11:30 to 12:00

Sampled by Ken Vanhoy

Weather Rain, 50°

GROUNDWATER ELEVATION

1) Depth to water from measuring point 22.65 ft.

2) Depth to well bottom from measuring point 32.66 ft.

3) Height of water column 9.95 ft.

4) Measuring point description Top of 2" PVC Casing

WELL PURGING AND SAMPLE COLLECTION

1) Volume of water in well
   a) 2" well . . . . (v = 0.163 x h)
   b) 4" well . . . . (v = 0.651 x h) 1.62 gal.

2) Volume of water removed prior to sampling 6.48 gal.

3) Was well pumped DRY? (circle one) YES NO

FIELD ANALYSIS

1) Temperature 53.4°F

2) Specific Conductance 131 μMHOs

3) pH 6.95

4) Physical Appearance and Odor Cloudy, no odor

APPENDIX E

GROUNDWATER LABORATORY REPORTS

pace INCORPORATED
THE ASSURANCE OF QUALITY

REPORT OF LABORATORY ANALYSIS

February 18, 1993

FEB 1993
RECEIVED

Mr. Ken Vanhoy
Bain & Palmer & Asso.
2641-G Randleman Road
Greensboro, NC 27406

RE: PACE Project No. 630205.504
Client Reference: Girmes

Dear Mr. Vanhoy:

Enclosed is the report of laboratory analyses for samples received February 05, 1993.

Footnotes are given at the end of the report.

If you have any questions concerning this report, please feel free to contact us.

Sincerely,

Jennifer J. Carriker
Project Manager

Enclosures

9800 Kincey Avenue, Suite 100
Huntersville, NC 28078
TEL: 704-875-9092
FAX: 704-875-9091

An Equal Opportunity Employer

pace INCORPORATED
THE ASSURANCE OF QUALITY

REPORT OF LABORATORY ANALYSIS

Bain & Palmer & Asso.
2641-G Randleman Road
Greensboro, NC 27406

February 18, 1993
PACE Project Number: 630205504

Attn: Mr. Ken Vanhoy

Client Reference: Girmes

PACE Sample Number:			92 0183843		
Date Collected:			02/04/93		
Date Received:			02/05/93		
Client Sample ID:			Supply		
Parameter	Units	MDL	Well	METHOD	DATE ANALYZED
ORGANIC ANALYSIS					
VOLATILE ORGANICS-624				624	
Date Analyzed	ug/L		020893		02/08/93
Benzene	ug/L	5.0	ND		02/08/93
Bromodichloromethane	ug/L	5.0	ND		02/08/93
Bromoform	ug/L	5.0	ND		02/08/93
Bromomethane	ug/L	10	ND		02/08/93
Carbon tetrachloride	ug/L	5.0	ND		02/08/93
Chlorobenzene	ug/L	5.0	ND		02/08/93
Chloroethane	ug/L	10	ND		02/08/93
2-Chloroethylvinyl ether	ug/L	10	ND		02/08/93
Chloroform	ug/L	5.0	ND		02/08/93
Chloromethane	ug/L	10	ND		02/08/93
Dibromochloromethane	ug/L	5.0	ND		02/08/93
1,2-Dichlorobenzene	ug/L	5.0	ND		02/08/93
1.3-Dichlorobenzene	ug/L	5.0	ND		02/08/93
1,4-Dichlorobenzene	ug/L	5.0	ND		02/08/93
1,1-Dichloroethane	ug/L	5.0	ND		02/08/93
1,2-Dichloroethane	ug/L	5.0	ND		02/08/93
1,1-Dichloroethylene	ug/L	5.0	ND		02/08/93
Total 1,2-dichloroethylene	ug/L	5.0	ND		02/08/93
1,2-Dichloropropane	ug/L	5.0	ND		02/08/93
Cis-1,3-dichloropropene	ug/L	5.0	ND		02/08/93
Trans-1,3-dichloropropene	ug/L	5.0	ND		02/08/93
Ethyl Benzene	ug/L	5.0	ND		02/08/93
Methylene chloride	ug/L	5.0	ND		02/08/93
1,1,2,2-Tetrachloroethane	ug/L	5.0	ND		02/08/93
Tetrachloroethylene	ug/L	5.0	ND		02/08/93
Toluene	ug/L	5.0	ND		02/08/93
1,1,1-Trichloroethane	ug/L	5.0	ND		02/08/93
1,1,2-Trichloroethane	ug/L	5.0	ND		02/08/93

9800 Kincey Avenue, Suite 100
Huntersville, NC 28078
TEL: 704-875-9092
FAX: 704-875-9091

An Equal Opportunity Employer

pace INCORPORATED
THE ASSURANCE OF QUALITY

REPORT OF LABORATORY ANALYSIS

. Ken Vanhoy
Page 2

February 18, 1993
PACE Project Number: 630205504

Client Reference: Girmes

PACE Sample Number:			92 0183843		
Date Collected:			02/04/93		
Date Received:			02/05/93		
Client Sample ID:			Supply		
Parameter	Units	MDL	Well	METHOD	DATE ANALYZED
ORGANIC ANALYSIS					
VOLATILE ORGANICS-624				624	
Trichloroethylene	ug/L	5.0	ND		02/08/93
Trichlorofluoromethane	ug/L	10	ND		02/08/93
Vinyl Chloride	ug/L	10	ND		02/08/93

9800 Kincey Avenue, Suite 100
Huntersville, NC 28078
TEL: 704-875-9092
FAX: 704-875-9091

An Equal Opportunity Employer

Georgia-Pacific
its subsidiaries and affiliates

AMENDMENT NO. 1 TO CONSULTING SERVICES AGREEMENT

THIS AMENDMENT, made and entered into as of March 31, 2010 by and between, **GP** (as defined below) and **RMT, Inc.** (as defined below).

SUPPLIER (Seller)	GP (Buyer)
NAME **RMT, Inc.**	NAME **Georgia-Pacific LLC** **and their US subsidiaries**
STATE OF INCORPORATION **Wisconsin**	STATE OF INCORPORATION **Delaware**
BUSINESS ADDRESS **30 Patewood Drive, Suite 100**	BUSINESS ADDRESS **133 Peachtree Street, NE**
CITY / STATE / ZIP CODE **Greenville, South Carolina, 29615**	CITY / STATE / ZIP CODE **Atlanta, GA 30303**

This Amendment No. 1 ("Amendment") is made and entered into as of March 31, 2010 by and between RMT, Inc. ("Consultant" or "Contractor"), and Georgia-Pacific LLC and their US subsidiaries ("GP").

WHEREAS, Consultant and GP entered into that certain Environmental Consulting Agreement effective as of May 22, 2008 (the "Agreement"), and desire to amend certain terms of the Agreement as specifically set forth below;

NOW, THEREFORE, the parties agree as follows:

A. **Term:** Article 8, subsection (a) Agreement is replaced and amended as follows:"This Agreement is effective until May 21, 2012 unless terminated by either party in accordance with this section. Completion of Work under any specific Project or GP's failure to order additional Projects hereunder shall not terminate this Agreement unless terminated in writing by either party, it being the intent of the parties to leave this Agreement in effect in the event of future Projects."

B. **Exhibit B:** Exhibit B shall be modified to include Exhibit B Addendum 1.

C. All other terms and conditions of the Agreement shall remain unchanged. This Amendment shall be attached to and become part of the Agreement.

***

IN WITNESS WHEREOF, the parties have executed this Amendment to become effective as of the March 31, 2010.

SUPPLIER(Seller)	GP(Buyer)
NAME RMT, Inc.	NAME Georgia-Pacific LLC and their US subsidiaries
AUTHORIZED SIGNATURE Karen C Saucier	AUTHORIZED SIGNATURE JBP
PRINT NAME KAREN C SAUCIER	PRINT NAME John B. Hartman
TITLE VICE PRESIDENT	TITLE Senior Sourcing Manager

Exhibit B Addendum 1
Auditor Rate Classication and Attribute Definitions/ Auditor Billing Rates

Classification	Characteristic Responsibilities	Education	Experience Level
Principal Auditor	A subject matter expert and lead auditor who acts as an advisor within the organization to other auditors. This professional has significant experience supervising audit teams including serving as lead auditor with full field responsibility. The minimum criteria meeting these requirements will be at least 20 years of total Environmental or Health and Safety experience in addition to a relevant professional certification (CSP, CIH, PE, CPEA, or similar). Qualifying technical experience would include having worked in an EHS role at a large manufacturing facility, or in a corporate organization, or with a regulatory agency, or consulted for industry in technical EHS topics, or a combination of those roles.	Bachelor degree or equivalent required	At least 10 years of environmental and / or health & safety auditing experience
Lead Auditor	Manages/provides technical work direction to a group of auditors on an audit or a number of small to medium audits. Leads audit team during on-site audit activities. Conducts reviews of auditors' work and is responsible for all deliverables for the audit.	Bachelor degree or equivalent required	Extensive previous relevant experience
Project Auditor	Under work direction from a lead auditor, assists in carrying out conventional compliance audit tasks (e.g., program & document review; audit document preparation; field interviews; document & program verification). Assists in completing field audits (e.g., prepare draft findings & final reports; daily summary meetings, etc.).	Bachelor degree or equivalent required	General previous relevant experience
Junior Auditor	Under work direction from the lead auditor, assists in carrying out compliance audit tasks (e.g., program & document review; audit document preparation; protocols and checklists; regulation research and support for auditors) to gain experience required to be a Project Auditor. Assists in completing field audits (e.g., compiles draft findings from other auditors & final reports; attends daily summary meetings, etc.).	Bachelor degree or equivalent required	Education or other relevant experience

Note: Junior auditors shall not be first-time auditors; Suppliers shall pay for any time and expense spent in the training of junior auditors

MP

Exhibit B Addendum 1
Auditor Rate Classication and Attribute Definitions/ Auditor Billing Rates

Audit Location	United States
Currency	US Dollars
Rate Classification	Hourly Rate
Principal Auditor	$143.00
Lead Auditor	$143.00
Project Auditor	$113.00
Junior Auditor	$113.00

Audit Location	European Union
Rate Currency	Euros
Rate Classification	Hourly Rate
Principal Auditor	No Bid
Lead Auditor	No Bid
Project Auditor	No Bid
Junior Auditor	No Bid

Audit Location	Columbia
Currency	COP
Rate Classification	Hourly Rate
Principal Auditor	No Bid
Lead Auditor	No Bid
Project Auditor	No Bid
Junior Auditor	No Bid

Audit Location	Canada
Rate Currency	Canadian Dollars
Rate Classification	Hourly Rate
Principal Auditor	No Bid
Lead Auditor	No Bid
Project Auditor	No Bid
Junior Auditor	No Bid

Audit Location	Singapore
Currency	Singapore Dollar
Rate Classification	Hourly Rate
Principal Auditor	No Bid
Lead Auditor	No Bid
Project Auditor	No Bid
Junior Auditor	No Bid

Audit Location	Japan
Currency	Yen
Rate Classification	Hourly Rate
Principal Auditor	No Bid
Lead Auditor	No Bid
Project Auditor	No Bid
Junior Auditor	No Bid

Audit Location	Mexico
Rate Currency	Pesos
Rate Classification	Hourly Rate
Principal Auditor	No Bid
Lead Auditor	No Bid
Project Auditor	No Bid
Junior Auditor	No Bid

Audit Location	Brazil
Currency	Real
Rate Classification	Hourly Rate
Principal Auditor	No Bid
Lead Auditor	No Bid
Project Auditor	No Bid
Junior Auditor	No Bid

Audit Location	Taiwan
Currency	
Rate Classification	Hourly Rate
Principal Auditor	No Bid
Lead Auditor	No Bid
Project Auditor	No Bid
Junior Auditor	No Bid

Audit Location	United Kingdom
Rate Currency	British Pound
Rate Classification	Hourly Rate
Principal Auditor	No Bid
Lead Auditor	No Bid
Project Auditor	No Bid
Junior Auditor	No Bid

Audit Location	China
Currency	Yuan
Rate Classification	Hourly Rate
Principal Auditor	No Bid
Lead Auditor	No Bid
Project Auditor	No Bid
Junior Auditor	No Bid

Audit Location	Russia
Currency	Ruble
Rate Classification	Hourly Rate
Principal Auditor	No Bid
Lead Auditor	No Bid
Project Auditor	No Bid
Junior Auditor	No Bid

Audit Location	Argentina
Rate Currency	Argentine Peso
Rate Classification	Hourly Rate
Principal Auditor	No Bid
Lead Auditor	No Bid
Project Auditor	No Bid
Junior Auditor	No Bid

Audit Location	South Korea
Rate Currency	Won
Rate Classification	Hourly Rate
Principal Auditor	No Bid
Lead Auditor	No Bid
Project Auditor	No Bid
Junior Auditor	No Bid

Audit Location	Turkey
Rate Currency	Lira
Rate Classification	Hourly Rate
Principal Auditor	No Bid
Lead Auditor	No Bid
Project Auditor	No Bid
Junior Auditor	No Bid

Audit Location	Switzerland
Rate Currency	Swiss Franc
Rate Classification	Hourly Rate
Principal Auditor	No Bid
Lead Auditor	No Bid
Project Auditor	No Bid
Junior Auditor	No Bid

Audit Location	Thailand
Rate Currency	Baht
Rate Classification	Hourly Rate
Principal Auditor	No Bid
Lead Auditor	No Bid
Project Auditor	No Bid
Junior Auditor	No Bid

JP

Rates include all internal expenses include computer, copying, phone, etc. Rates are specified in the currency of the country in which the audit activity is occurring unless otherwise noted. However, all associated invoices will be converted to US Dollars at then prevailing exchange rates. Exceptions that allow local payment of invoices will be handled on a case by case basis subject to the mutual agreement of both parties. Subcontractors will be billed under the same rates and staffing classifications as Contractor. Contractor personnel will be billed according to their respective rate classification qualifications and attributes; even if different from the specific role each person plays in a particular audit.

Invoice Requirements

Consultant shall ensure timely receipt of invoices to GP. If monthly invoices are not submitted to GP within ten (10) business days from the close of the month, then GP shall automatically receive a credit for the specific invoice based on the following credit schedule.

Days Late	Associated Credit
One to five business days late	0%
Six to ten business days late	1%
Eleven business days or more	2%

The late invoice dollar amount will be multiplied by the associated credit.

REPORT OF LABORATORY ANALYSIS

February 18, 1993
PACE Project Number: 630205504

Client Reference: Girmes

PACE Sample Number:			92-0183851		
Date Collected:			02/04/93		
Date Received:			02/05/93		
Client Sample ID:			MW-4		
Parameter	Units	MDL		METHOD	DATE ANALYZED
ORGANIC ANALYSIS					
VOLATILE ORGANICS-624				624	
Date Analyzed			020993		02/08/93
Benzene	ug/L	50	ND		02/08/93
Bromodichloromethane	ug/L	50	ND		02/08/93
Bromoform	ug/L	50	ND		02/08/93
Bromomethane	ug/L	100	ND		02/08/93
Carbon tetrachloride	ug/L	50	ND		02/08/93
Chlorobenzene	ug/L	50	ND		02/08/93
Chloroethane	ug/L	100	ND		02/08/93
2-Chloroethylvinyl ether	ug/L	100	ND		02/08/93
Chloroform	ug/L	50	ND		02/08/93
Chloromethane	ug/L	100	ND		02/08/93
Dibromochloromethane	ug/L	50	ND		02/08/93
1,2-Dichlorobenzene	ug/L	50	ND		02/08/93
1.3-Dichlorobenzene	ug/L	50	ND		02/08/93
1,4-Dichlorobenzene	ug/L	50	ND		02/08/93
1,1-Dichloroethane	ug/L	50	ND		02/08/93
1,2-Dichloroethane	ug/L	50	ND		02/08/93
1,1-Dichloroethylene	ug/L	50	ND		02/08/93
Total 1,2-dichloroethylene	ug/L	50	ND		02/08/93
1,2-Dichloropropane	ug/L	50	ND		02/08/93
Cis-1,3-dichloropropene	ug/L	50	ND		02/08/93
Trans-1,3-dichloropropene	ug/L	50	ND		02/08/93
Ethyl Benzene	ug/L	50	ND		02/08/93
Methylene chloride	ug/L	50	ND		02/08/93
1,1,2,2-Tetrachloroethane	ug/L	50	ND		02/08/93
Tetrachloroethylene	ug/L	50	ND		02/08/93
Toluene	ug/L	50	ND		02/08/93
1,1,1-Trichloroethane	ug/L	50	ND		02/08/93
1,1,2-Trichloroethane	ug/L	50	ND		02/08/93
Trichloroethylene	ug/L	250	3860		02/08/93
Trichlorofluoromethane	ug/L	100	ND		02/08/93

9800 Kincey Avenue, Suite 100
Huntersville, NC 28078
TEL: 704-875-9092
FAX: 704-875-9091

An Equal Opportunity Employer

pace INCORPORATED
THE ASSURANCE OF QUALITY

REPORT OF LABORATORY ANALYSIS

.r. Ken Vanhoy
Page 4

February 18, 1993
PACE Project Number: 630205504

Client Reference: Girmes

PACE Sample Number:			92 0183851		
Date Collected:			02/04/93		
Date Received:			02/05/93		
Client Sample ID:			MW-4		
Parameter	Units	MDL		METHOD	DATE ANALYZED
ORGANIC ANALYSIS					
VOLATILE ORGANICS-624				624	
Vinyl Chloride	ug/L	100	ND		02/08/93

9800 Kincey Avenue, Suite 100
Huntersville, NC 28078
TEL: 704-875-9092
FAX: 704-875-9091

An Equal Opportunity Employer

pace INCORPORATED
THE ASSURANCE OF QUALITY

REPORT OF LABORATORY ANALYSIS

..r. Ken Vanhoy
Page 5

February 18, 1993
PACE Project Number: 630205504

Client Reference: Girmes

PACE Sample Number:			92 0183860		
Date Collected:			02/04/93		
Date Received:			02/05/93		
Client Sample ID:			MW-5		
Parameter	Units	MDL		METHOD	DATE ANALYZED
ORGANIC ANALYSIS					
VOLATILE ORGANICS-624				624	
Date Analyzed			020993		02/08/93
Benzene	ug/L	50	ND		02/08/93
Bromodichloromethane	ug/L	50	ND		02/08/93
Bromoform	ug/L	50	ND		02/08/93
Bromomethane	ug/L	100	ND		02/08/93
Carbon tetrachloride	ug/L	50	ND		02/08/93
Chlorobenzene	ug/L	50	ND		02/08/93
Chloroethane	ug/L	100	ND		02/08/93
2-Chloroethylvinyl ether	ug/L	100	ND		02/08/93
Chloroform	ug/L	50	ND		02/08/93
loromethane	ug/L	100	ND		02/08/93
ıibromochloromethane	ug/L	50	ND		02/08/93
1,2-Dichlorobenzene	ug/L	50	ND		02/08/93
1.3-Dichlorobenzene	ug/L	50	ND		02/08/93
1,4-Dichlorobenzene	ug/L	50	ND		02/08/93
1,1-Dichloroethane	ug/L	50	ND		02/08/93
1,2-Dichloroethane	ug/L	50	ND		02/08/93
1,1-Dichloroethylene	ug/L	50	ND		02/08/93
Total 1,2-dichloroethylene	ug/L	50	ND		02/08/93
1,2-Dichloropropane	ug/L	50	ND		02/08/93
Cis-1,3-dichloropropene	ug/L	50	ND		02/08/93
Trans-1,3-dichloropropene	ug/L	50	ND		02/08/93
Ethyl Benzene	ug/L	50	ND		02/08/93
Methylene chloride	ug/L	50	ND		02/08/93
1,1,2,2-Tetrachloroethane	ug/L	50	ND		02/08/93
Tetrachloroethylene	ug/L	50	ND		02/08/93
Toluene	ug/L	50	ND		02/08/93
1,1,1-Trichloroethane	ug/L	50	ND		02/08/93
1,1,2-Trichloroethane	ug/L	50	ND		02/08/93
Trichloroethylene	ug/L	500	8020		02/08/93
Trichlorofluoromethane	ug/L	10	ND		02/08/93

9800 Kincey Avenue, Suite 100
Huntersville, NC 28078
TEL: 704-875-9092
FAX: 704-875-9091

An Equal Opportunity Employer

pace INCORPORATED
THE ASSURANCE OF QUALITY

REPORT OF LABORATORY ANALYSIS

Mr. Ken Vanhoy
Page 6

February 18, 1993
PACE Project Number: 630205504

Client Reference: Girmes

PACE Sample Number:			92 0183860		
Date Collected:			02/04/93		
Date Received:			02/05/93		
Client Sample ID:			MW-5		
Parameter	Units	MDL		METHOD	DATE ANALYZED
ORGANIC ANALYSIS					
VOLATILE ORGANICS-624				624	
Vinyl Chloride	ug/L	10	ND		02/08/93

These data have been reviewed and are approved for release.

Margaret S. Harding
Manager, Organic Chemistry

9800 Kincey Avenue, Suite 100
Huntersville, NC 28078
TEL: 704-875-9092
FAX: 704-875-9091

An Equal Opportunity Employer

Mr. Ken Vanhoy
Page 7

FOOTNOTES
for pages 1 through 6

February 18, 1993
PACE Project Number: 630205504

Client Reference: Girmes

MDL Method Detection Limit
ND Not detected at or above the MDL.

9800 Kincey Avenue, Suite 100
Huntersville, NC 28078
TEL: 704-875-9092
FAX: 704-875-9091

An Equal Opportunity Employer

Mr. Ken Vanhoy
Page 8

QUALITY CONTROL DATA

February 18, 1993
PACE Project Number: 630205504

Client Reference: Girmes

VOLATILE ORGANICS
Batch: 75 05324
Samples: 92 0183843, 92 0183851, 92 0183860

METHOD BLANK:

Parameter	Units	MDL	Method Blank
1,1,2-Trichlor-1,2,2-trifluoroethane	ug/L	10	ND
Chloromethane	ug/L	10	ND
Vinyl chloride	ug/L	10	ND
Bromomethane	ug/L	10	ND
Chloroethane	ug/L	10	ND
Trichlorofluoromethane	ug/L	10	ND
1,1-Dichloroethene	ug/L	5	ND
Acetone	ug/L	50	ND
Carbon disulfide	ug/L	5	ND
thylene chloride	ug/L	5	ND
ans-1,2-Dichloroethene	ug/L	5	ND
1,1-Dichloroethane	ug/L	5	ND
2-Butanone	ug/L	50	ND
cis-1,2-Dichloroethene	ug/L	5	ND
Chloroform	ug/L	5	ND
1,2-Dichloroethane	ug/L	5	ND
1,1,1-Trichloroethane	ug/L	5	ND
Carbon tetrachloride	ug/L	5	ND
Benzene	ug/L	5	ND
Trichloroethene	ug/L	5	ND
1,2-Dichloropropane	ug/L	5	ND
Bromodichloromethane	ug/L	5	ND
cis-1,3-Dichloropropene	ug/L	5	ND
trans-1,3-Dichloropropene	ug/L	5	ND
1,1,2-Trichloroethane	ug/L	5	ND
Dibromochloromethane	ug/L	5	ND
Bromoform	ug/L	5	ND
4-Methyl-2-pentanone	ug/L	50	ND
Toluene	ug/L	5	ND
2-Hexanone	ug/L	50	ND
1,1,2,2-Tetrachloroethane	ug/L	5	ND
rachloroethene	ug/L	5	ND

REPORT OF LABORATORY ANALYSIS

Mr. Ken Vanhoy
Page 9

QUALITY CONTROL DATA

February 18, 1993
PACE Project Number: 630205504

Client Reference: Girmes

VOLATILE ORGANICS
Batch: 75 05324
Samples: 92 0183843, 92 0183851, 92 0183860

METHOD BLANK:

Parameter	Units	MDL	Method Blank
Chlorobenzene	ug/L	5	ND
Ethylbenzene	ug/L	5	ND
Styrene	ug/L	5	ND
Xylenes (Total)	ug/L	5	ND
1,3-Dichlorobenzene	ug/L	5	ND
1,4-Dichlorobenzene	ug/L	5	ND
1,2-Dichlorobenzene	ug/L	5	ND
1,2-Dichloroethane-d4 (Surrog. Recovery	%		108
Toluene-d8 (Surrog. Recovery	%		96.6
Bromofluorobenzene (Surrog. Recovery	%		103

SPIKE AND SPIKE DUPLICATE:

Parameter	Units	MDL	920183843 Supply Well	Spike	Spike Recv	Spike Dupl Recv	RPD
1,1-Dichloroethene	ug/L	5	ND	50	89%	88%	1%
Benzene	ug/L	5	ND	50	103%	97%	6%
Trichloroethene	ug/L	5	ND	50	108%	105%	2%
Toluene	ug/L	5	ND	50	103%	99%	3%
Chlorobenzene	ug/L	5	ND	50	105%	97%	7%

LABORATORY CONTROL SAMPLE:

Parameter	Units	MDL	Reference Value	Recv
1,1-Dichloroethene	ug/L	5	50	91%
Benzene	ug/L	5	50	103%
Trichloroethene	ug/L	5	50	99%
Toluene	ug/L	5	50	111%
Chlorobenzene	ug/L	5	50	101%

9800 Kincey Avenue, Suite 100
Huntersville, NC 28078
TEL: 704-875-9092
FAX: 704-875-9091

An Equal Opportunity Employer

REPORT OF LABORATORY ANALYSIS

Mr. Ken Vanhoy
Page 10

FOOTNOTES
for pages 8 through 9

February 18, 1993
PACE Project Number: 630205504

Client Reference: Girmes

MDL	Method Detection Limit
ND	Not detected at or above the MDL.
RPD	Relative Percent Difference

9800 Kincey Avenue, Suite 100
Huntersville, NC 28078
TEL: 704-875-9092
FAX: 704-875-9091

An Equal Opportunity Employer

PACE INCORPORATED
THE ASSURANCE OF QUALITY

1 433

CHAIN-OF-CUSTODY RECORD
Analytical Request

Client: Baine & Palmer & Assoc.
Address: 2641-G Randleman Rd
Greensboro, NC, 27406
Phone: 272 - 9713

Report To: Ken Vanhoy
Bill To: Baine & Palmer & Assoc.
P.O. # / Billing Reference: 121.001
Project Name / No.: Girmes

Pace Client No.: 612156
Pace Project Manager: JJC
Pace Project No.: 6302055C
*Requested Due Date:

Sampled By (PRINT): Ken Vanhoy
Kenneth B. Vanhoy 2-4-93
Sampler Signature / Date Sampled

ITEM NO.	SAMPLE DESCRIPTION	TIME	MATRIX	PACE NO.	NO. OF CONTAINERS	UNPRESERVED	H_2SO_4	HNO_3	VOA 40ml		ANALYSES REQUEST: 624	REMARKS
1	Supply Well	2-3-93 1:30	H_2O	18384.3	4				✓		✓	
2	MW-4	2-4-93 1:00	H_2O	18385.1	4				✓		✓	
3	MW-5	2-4-93 9:30	H_2O	18386.0	4				✓		✓	
4												
5												
6												
7												
8												

COOLER NOS.	BAILERS	SHIPMENT METHOD OUT / DATE	RETURNED / DATE
1			

ITEM NUMBER	RELINQUISHED BY / AFFILIATION	ACCEPTED BY / AFFILIATION	DATE	TIME
1,2,3	Ken Vanhoy	Fed Ex	2-4-93	5:45
		Jennifer C. Parrish	2-5	

Additional Comments
Please call if any Ques.
Ken Vanhoy 272-9713

SEE REVERSE SIDE FOR INSTRUCTIONS

pace
INCORPORATED
THE ASSURANCE OF QUALITY

REPORT OF LABORATORY ANALYSIS

FEB 1993
RECEIVED

February 24, 1993

Mr. Barry Nelson
Bain, Palmer & Assoc., Inc.
2641 G Randleman Rd.
Greensboro, NC 27406

RE: PACE Project No. 630216.502
Client Reference: J.L De Ball-Girmes 121.001

Dear Mr. Nelson:

Enclosed is the report of laboratory analyses for samples received February 16, 1993.

Footnotes are given at the end of the report.

If you have any questions concerning this report, please feel free to contact us.

Sincerely,

Jennifer J. Carriker
Project Manager

Enclosures

9800 Kincey Avenue, Suite 100
Huntersville, NC 28078
TEL: 704-875-9092
FAX: 704-875-9091

An Equal Opportunity Employer

pace INCORPORATED
THE ASSURANCE OF QUALITY

REPORT OF LABORATORY ANALYSIS

in, Palmer & Assoc., Inc.
2641 G Randleman Rd.
Greensboro, NC 27406

February 24, 1993
PACE Project Number: 630216502

Attn: Mr. Barry Nelson

Client Reference: J.L De Ball-Girmes 121.001

PACE Sample Number:			92 0188640		
Date Collected:			02/12/93		
Date Received:			02/16/93		
			MW-1		
Parameter	Units	MDL		METHOD	DATE ANALYZED
ORGANIC ANALYSIS					
VOLATILE ORGANICS-624				624	
Date Analyzed			021893		02/18/93
Benzene	ug/L	5.0	ND		02/18/93
Bromodichloromethane	ug/L	5.0	ND		02/18/93
Bromoform	ug/L	5.0	ND		02/18/93
Bromomethane	ug/L	10	ND		02/18/93
Carbon tetrachloride	ug/L	5.0	ND		02/18/93
Chlorobenzene	ug/L	5.0	ND		02/18/93
Chloroethane	ug/L	10	ND		02/18/93
Chloroethylvinyl ether	ug/L	10	ND		02/18/93
Chloroform	ug/L	5.0	ND		02/18/93
Chloromethane	ug/L	10	ND		02/18/93
Dibromochloromethane	ug/L	5.0	ND		02/18/93
1,2-Dichlorobenzene	ug/L	5.0	ND		02/18/93
1.3-Dichlorobenzene	ug/L	5.0	ND		02/18/93
1,4-Dichlorobenzene	ug/L	5.0	ND		02/18/93
1,1-Dichloroethane	ug/L	5.0	ND		02/18/93
1,2-Dichloroethane	ug/L	5.0	ND		02/18/93
1,1-Dichloroethylene	ug/L	5.0	ND		02/18/93
Total 1,2-dichloroethylene	ug/L	5.0	ND		02/18/93
1,2-Dichloropropane	ug/L	5.0	ND		02/18/93
Cis-1,3-dichloropropene	ug/L	5.0	ND		02/18/93
Trans-1,3-dichloropropene	ug/L	5.0	ND		02/18/93
Ethyl Benzene	ug/L	5.0	ND		02/18/93
Methylene chloride	ug/L	5.0	ND		02/18/93
1,1,2,2-Tetrachloroethane	ug/L	5.0	ND		02/18/93
Tetrachloroethylene	ug/L	5.0	ND		02/18/93
Toluene	ug/L	5.0	ND		02/18/93
1,1,1-Trichloroethane	ug/L	5.0	ND		02/18/93
1,1,2-Trichloroethane	ug/L	5.0	ND		02/18/93

9800 Kincey Avenue, Suite 100
Huntersville, NC 28078
TEL: 704-875-9092
FAX: 704-875-9091

An Equal Opportunity Employer

REPORT OF LABORATORY ANALYSIS

Mr. Barry Nelson
Page 2

February 24, 1993
PACE Project Number: 630216502

Client Reference: J.L De Ball-Girmes 121.001

PACE Sample Number:			92 0188640		
Date Collected:			02/12/93		
Date Received:			02/16/93		
Client Sample ID:			MW-1		
Parameter	Units	MDL		METHOD	DATE ANALYZED
ORGANIC ANALYSIS					
VOLATILE ORGANICS-624				624	
Trichloroethylene	ug/L	5.0	ND		02/18/93
Trichlorofluoromethane	ug/L	10	ND		02/18/93
Vinyl Chloride	ug/L	10	ND		02/18/93
BASE/NEUTRAL SEMIVOLATILE ORGANICS-625B				625	
Date Extracted			021793		02/17/93
Acenaphthene	ug/L	10	ND		02/22/93
Acenaphthylene	ug/L	10	ND		02/22/93
Anthracene	ug/L	10	ND		02/22/93
Benzo(a)anthracene	ug/L	10	ND		02/22/93
Benzo(a)pyrene	ug/L	10	ND		02/22/93
Benzo(b)fluoranthene	ug/L	10	ND		02/22/93
Benzo(k)fluoranthene	ug/L	10	ND		02/22/93
Benzo(g,h,i)perylene	ug/L	10	ND		02/22/93
Bis(2-chloroethoxy)methane	ug/L	10	ND		02/22/93
Bis(2-chloroethyl)ether	ug/L	10	ND		02/22/93
Bis(2-chloroisopropyl)ether	ug/L	10	ND		02/22/93
Bis(2-ethylhexyl)phthalate	ug/L	10	ND		02/22/93
4-Bromophenol phenyl ether	ug/L	10	ND		02/22/93
Benzyl butyl phthalate	ug/L	10	ND		02/22/93
2-Chloronaphthalene	ug/L	10	ND		02/22/93
4-Chlorophenyl phenyl ether	ug/L	10	ND		02/22/93
Chrysene	ug/L	10	ND		02/22/93
Dibenzo(a,h)anthracene	ug/L	10	ND		02/22/93
1,2-Dichlorobenzene	ug/L	10	ND		02/22/93
1,3-Dichlorobenzene	ug/L	10	ND		02/22/93
1,4-Dichlorobenzene	ug/L	10	ND		02/22/93
3,3-Dichlorobenzidine	ug/L	20	ND		02/22/93
Diethyl phthalate	ug/L	10	ND		02/22/93
Dimethyl phthalate	ug/L	10	ND		02/22/93
Di-n-butyl phthalate	ug/L	10	ND		02/22/93
2,4-Dinitrotoluene	ug/L	10	ND		02/22/93

pace INCORPORATED
THE ASSURANCE OF QUALITY

REPORT OF LABORATORY ANALYSIS

Mr. Barry Nelson
Page 3

February 24, 1993
PACE Project Number: 630216502

Client Reference: J.L De Ball-Girmes 121.001

PACE Sample Number:			92 0188640		
Date Collected:			02/12/93		
Date Received:			02/16/93		
Client Sample ID:			MW-1		
Parameter	Units	MDL		METHOD	DATE ANALYZED
ORGANIC ANALYSIS					
BASE/NEUTRAL SEMIVOLATILE ORGANICS-625B				625	
2,6-Dinitrotoluene	ug/L	10	ND		02/22/93
Di-n-octylphthalate	ug/L	10	ND		02/22/93
Fluoranthene	ug/L	10	ND		02/22/93
Fluorene	ug/L	10	ND		02/22/93
Hexachlorobenzene	ug/L	10	ND		02/22/93
Hexachlorobutadiene	ug/L	10	ND		02/22/93
Hexachloroethane	ug/L	10	ND		02/22/93
Indeno(1,2,3,-cd)pyrene	ug/L	10	ND		02/22/93
Isophorone	ug/L	10	ND		02/22/93
Naphthalene	ug/L	10	ND		02/22/93
trobenzene	ug/L	10	ND		02/22/93
N-Nitrosodi-n-propylamine	ug/L	10	ND		02/22/93
N-Nitrosodiphenylamine	ug/L	10	ND		02/22/93
Phenanthrene	ug/L	10	ND		02/22/93
Pyrene	ug/L	10	ND		02/22/93
1,2,4-Trichlorobenzene	ug/L	10	ND		02/22/93
Hexachlorocyclopentadiene	ug/L	10	ND		02/22/93
N-Nitrosodi-n-methylamine	ug/L	10	ND		02/22/93

9800 Kincey Avenue, Suite 100
Huntersville, NC 28078
TEL: 704-875-9092
FAX: 704-875-9091

An Equal Opportunity Employer

REPORT OF LABORATORY ANALYSIS

. Barry Nelson
Page 4

February 24, 1993
PACE Project Number: 630216502

Client Reference: J.L De Ball-Girmes 121.001

PACE Sample Number:			92 0188659		
Date Collected:			02/12/93		
Date Received:			02/16/93		
Client Sample ID:			MW-2		
Parameter	Units	MDL		METHOD	DATE ANALYZED
ORGANIC ANALYSIS					
VOLATILE ORGANICS-624				624	
Date Analyzed			021893		02/18/93
Benzene	ug/L	5.0	ND		02/18/93
Bromodichloromethane	ug/L	5.0	ND		02/18/93
Bromoform	ug/L	5.0	ND		02/18/93
Bromomethane	ug/L	10	ND		02/18/93
Carbon tetrachloride	ug/L	5.0	ND		02/18/93
Chlorobenzene	ug/L	5.0	ND		02/18/93
Chloroethane	ug/L	10	ND		02/18/93
2-Chloroethylvinyl ether	ug/L	10	ND		02/18/93
Chloroform	ug/L	5.0	ND		02/18/93
Chloromethane	ug/L	10	ND		02/18/93
Bromochloromethane	ug/L	5.0	ND		02/18/93
1,2-Dichlorobenzene	ug/L	5.0	ND		02/18/93
1.3-Dichlorobenzene	ug/L	5.0	ND		02/18/93
1,4-Dichlorobenzene	ug/L	5.0	ND		02/18/93
1,1-Dichloroethane	ug/L	5.0	ND		02/18/93
1,2-Dichloroethane	ug/L	5.0	ND		02/18/93
1,1-Dichloroethylene	ug/L	5.0	ND		02/18/93
Total 1,2-dichloroethylene	ug/L	5.0	ND		02/18/93
1,2-Dichloropropane	ug/L	5.0	ND		02/18/93
Cis-1,3-dichloropropene	ug/L	5.0	ND		02/18/93
Trans-1,3-dichloropropene	ug/L	5.0	ND		02/18/93
Ethyl Benzene	ug/L	5.0	ND		02/18/93
Methylene chloride	ug/L	5.0	ND		02/18/93
1,1,2,2-Tetrachloroethane	ug/L	5.0	ND		02/18/93
Tetrachloroethylene	ug/L	5.0	ND		02/18/93
Toluene	ug/L	5.0	ND		02/18/93
1,1,1-Trichloroethane	ug/L	5.0	ND		02/18/93
1,1,2-Trichloroethane	ug/L	5.0	ND		02/18/93
Trichloroethylene	ug/L	5.0	130		02/18/93
Trichlorofluoromethane	ug/L	10	ND		02/18/93

pace INCORPORATED
THE ASSURANCE OF QUALITY

REPORT OF LABORATORY ANALYSIS

.r. Barry Nelson
Page 5

February 24, 1993
PACE Project Number: 630216502

Client Reference: J.L De Ball-Girmes 121.001

PACE Sample Number:			92 0188659		
Date Collected:			02/12/93		
Date Received:			02/16/93		
Client Sample ID:			MW-2		
Parameter	Units	MDL		METHOD	DATE ANALYZED
ORGANIC ANALYSIS					
VOLATILE ORGANICS-624				624	
Vinyl Chloride	ug/L	10	ND		02/18/93

9800 Kincey Avenue, Suite 100
Huntersville, NC 28078
TEL: 704-875-9092
FAX: 704-875-9091

An Equal Opportunity Employer

pace INCORPORATED
THE ASSURANCE OF QUALITY

REPORT OF LABORATORY ANALYSIS

February 24, 1993
PACE Project Number: 630216502

Client Reference: J.L De Ball-Girmes 121.001

PACE Sample Number:			92 0188667		
Date Collected:			02/12/93		
Date Received:			02/16/93		
Client Sample ID:			MW-6		
Parameter	Units	MDL		METHOD	DATE ANALYZED
ORGANIC ANALYSIS					
VOLATILE ORGANICS-624				624	
Date Analyzed			021893		02/18/93
Benzene	ug/L	5.0	ND		02/18/93
Bromodichloromethane	ug/L	5.0	ND		02/18/93
Bromoform	ug/L	5.0	ND		02/18/93
Bromomethane	ug/L	10	ND		02/18/93
Carbon tetrachloride	ug/L	5.0	ND		02/18/93
Chlorobenzene	ug/L	5.0	ND		02/18/93
Chloroethane	ug/L	10	ND		02/18/93
2-Chloroethylvinyl ether	ug/L	10	ND		02/18/93
Chloroform	ug/L	5.0	ND		02/18/93
loromethane	ug/L	10	ND		02/18/93
ibromochloromethane	ug/L	5.0	ND		02/18/93
1,2-Dichlorobenzene	ug/L	5.0	ND		02/18/93
1.3-Dichlorobenzene	ug/L	5.0	ND		02/18/93
1,4-Dichlorobenzene	ug/L	5.0	ND		02/18/93
1,1-Dichloroethane	ug/L	5.0	ND		02/18/93
1,2-Dichloroethane	ug/L	5.0	ND		02/18/93
1,1-Dichloroethylene	ug/L	5.0	ND		02/18/93
Total 1,2-dichloroethylene	ug/L	5.0	ND		02/18/93
1,2-Dichloropropane	ug/L	5.0	ND		02/18/93
Cis-1,3-dichloropropene	ug/L	5.0	ND		02/18/93
Trans-1,3-dichloropropene	ug/L	5.0	ND		02/18/93
Ethyl Benzene	ug/L	5.0	ND		02/18/93
Methylene chloride	ug/L	5.0	ND		02/18/93
1,1,2,2-Tetrachloroethane	ug/L	5.0	ND		02/18/93
Tetrachloroethylene	ug/L	5.0	ND		02/18/93
Toluene	ug/L	5.0	ND		02/18/93
1,1,1-Trichloroethane	ug/L	5.0	ND		02/18/93
1,1,2-Trichloroethane	ug/L	5.0	ND		02/18/93
Trichloroethylene	ug/L	5.0	ND		02/18/93
Trichlorofluoromethane	ug/L	10	ND		02/18/93

9800 Kincey Avenue, Suite 100
Huntersville, NC 28078
TEL: 704-875-9092
FAX: 704-875-9091

An Equal Opportunity Employer

REPORT OF LABORATORY ANALYSIS

Mr. Barry Nelson
Page 7

February 24, 1993
PACE Project Number: 630216502

Client Reference: J.L De Ball-Girmes 121.001

PACE Sample Number:			92 0188667		
Date Collected:			02/12/93		
Date Received:			02/16/93		
Client Sample ID:			MW-6		
Parameter	Units	MDL		METHOD	DATE ANALYZED
ORGANIC ANALYSIS					
VOLATILE ORGANICS-624				624	
Vinyl Chloride	ug/L	10	ND		02/18/93
BASE/NEUTRAL SEMIVOLATILE ORGANICS-625B				625	
Date Extracted			021793		02/17/93
Acenaphthene	ug/L	10	ND		02/22/93
Acenaphthylene	ug/L	10	ND		02/22/93
Anthracene	ug/L	10	ND		02/22/93
Benzo(a)anthracene	ug/L	10	ND		02/22/93
Benzo(a)pyrene	ug/L	10	ND		02/22/93
Benzo(b)fluoranthene	ug/L	10	ND		02/22/93
Benzo(k)fluoranthene	ug/L	10	ND		02/22/93
Benzo(g,h,i)perylene	ug/L	10	ND		02/22/93
Bis(2-chloroethoxy)methane	ug/L	10	ND		02/22/93
Bis(2-chloroethyl)ether	ug/L	10	ND		02/22/93
Bis(2-chloroisopropyl)ether	ug/L	10	ND		02/22/93
Bis(2-ethylhexyl)phthalate	ug/L	10	ND		02/22/93
4-Bromophenol phenyl ether	ug/L	10	ND		02/22/93
Benzyl butyl phthalate	ug/L	10	ND		02/22/93
2-Chloronaphthalene	ug/L	10	ND		02/22/93
4-Chlorophenyl phenyl ether	ug/L	10	ND		02/22/93
Chrysene	ug/L	10	ND		02/22/93
Dibenzo(a,h)anthracene	ug/L	10	ND		02/22/93
1,2-Dichlorobenzene	ug/L	10	ND		02/22/93
1,3-Dichlorobenzene	ug/L	10	ND		02/22/93
1,4-Dichlorobenzene	ug/L	10	ND		02/22/93
3,3-Dichlorobenzidine	ug/L	20	ND		02/22/93
Diethyl phthalate	ug/L	10	ND		02/22/93
Dimethyl phthalate	ug/L	10	ND		02/22/93
Di-n-butyl phthalate	ug/L	10	ND		02/22/93
2,4-Dinitrotoluene	ug/L	10	ND		02/22/93
2,6-Dinitrotoluene	ug/L	10	ND		02/22/93
Di-n-octylphthalate	ug/L	10	ND		02/22/93

pace INCORPORATED
THE ASSURANCE OF QUALITY

REPORT OF LABORATORY ANALYSIS

.r. Barry Nelson
Page 8

February 24, 1993
PACE Project Number: 630216502

Client Reference: J.L De Ball-Girmes 121.001

PACE Sample Number:			92 0188667		
Date Collected:			02/12/93		
Date Received:			02/16/93		
Client Sample ID:			MW-6		
Parameter	Units	MDL		METHOD	DATE ANALYZED
ORGANIC ANALYSIS					
BASE/NEUTRAL SEMIVOLATILE ORGANICS-625B				625	
Fluoranthene	ug/L	10	ND		02/22/93
Fluorene	ug/L	10	ND		02/22/93
Hexachlorobenzene	ug/L	10	ND		02/22/93
Hexachlorobutadiene	ug/L	10	ND		02/22/93
Hexachloroethane	ug/L	10	ND		02/22/93
Indeno(1,2,3,-cd)pyrene	ug/L	10	ND		02/22/93
Isophorone	ug/L	10	ND		02/22/93
Naphthalene	ug/L	10	ND		02/22/93
Nitrobenzene	ug/L	10	ND		02/22/93
N-Nitrosodi-n-propylamine	ug/L	10	ND		02/22/93
Nitrosodiphenylamine	ug/L	10	ND		02/22/93
.nenanthrene	ug/L	10	ND		02/22/93
Pyrene	ug/L	10	ND		02/22/93
1,2,4-Trichlorobenzene	ug/L	10	ND		02/22/93
Hexachlorocyclopentadiene	ug/L	10	ND		02/22/93
N-Nitrosodi-n-methylamine	ug/L	10	ND		02/22/93

9800 Kincey Avenue, Suite 100
Huntersville, NC 28078
TEL: 704-875-9092
FAX: 704-875-9091

An Equal Opportunity Employer

pace INCORPORATED
THE ASSURANCE OF QUALITY

REPORT OF LABORATORY ANALYSIS

Mr. Barry Nelson
Page 9

February 24, 1993
PACE Project Number: 630216502

Client Reference: J.L De Ball-Girmes 121.001

PACE Sample Number:			92 0188675		
Date Collected:			02/12/93		
Date Received:			02/16/93		
Client Sample ID:			MW-7		
Parameter	Units	MDL		METHOD	DATE ANALYZED
ORGANIC ANALYSIS					
VOLATILE ORGANICS-624				624	
Date Analyzed			021893		02/18/93
Benzene	ug/L	5.0	ND		02/18/93
Bromodichloromethane	ug/L	5.0	ND		02/18/93
Bromoform	ug/L	5.0	ND		02/18/93
Bromomethane	ug/L	10	ND		02/18/93
Carbon tetrachloride	ug/L	5.0	ND		02/18/93
Chlorobenzene	ug/L	5.0	ND		02/18/93
Chloroethane	ug/L	10	ND		02/18/93
2-Chloroethylvinyl ether	ug/L	10	ND		02/18/93
Chloroform	ug/L	5.0	ND		02/18/93
loromethane	ug/L	10	ND		02/18/93
Dibromochloromethane	ug/L	5.0	ND		02/18/93
1,2-Dichlorobenzene	ug/L	5.0	ND		02/18/93
1.3-Dichlorobenzene	ug/L	5.0	ND		02/18/93
1,4-Dichlorobenzene	ug/L	5.0	ND		02/18/93
1,1-Dichloroethane	ug/L	5.0	ND		02/18/93
1,2-Dichloroethane	ug/L	5.0	ND		02/18/93
1,1-Dichloroethylene	ug/L	5.0	ND		02/18/93
Total 1,2-dichloroethylene	ug/L	5.0	ND		02/18/93
1,2-Dichloropropane	ug/L	5.0	ND		02/18/93
Cis-1,3-dichloropropene	ug/L	5.0	ND		02/18/93
Trans-1,3-dichloropropene	ug/L	5.0	ND		02/18/93
Ethyl Benzene	ug/L	5.0	ND		02/18/93
Methylene chloride	ug/L	5.0	ND		02/18/93
1,1,2,2-Tetrachloroethane	ug/L	5.0	ND		02/18/93
Tetrachloroethylene	ug/L	5.0	ND		02/18/93
Toluene	ug/L	5.0	ND		02/18/93
1,1,1-Trichloroethane	ug/L	5.0	ND		02/18/93
1,1,2-Trichloroethane	ug/L	5.0	ND		02/18/93
Trichloroethylene	ug/L	5.0	47		02/18/93
Trichlorofluoromethane	ug/L	10	ND		02/18/93

9800 Kincey Avenue, Suite 100
Huntersville, NC 28078
TEL: 704-875-9092
FAX: 704-875-9091

An Equal Opportunity Employer

pace INCORPORATED
THE ASSURANCE OF QUALITY

REPORT OF LABORATORY ANALYSIS

Mr. Barry Nelson
Page 10

February 24, 1993
PACE Project Number: 630216502

Client Reference: J.L De Ball-Girmes 121.001

PACE Sample Number:			92 0188675		
Date Collected:			02/12/93		
Date Received:			02/16/93		
Client Sample ID:			MW-7		
Parameter	Units	MDL		METHOD	DATE ANALYZED
ORGANIC ANALYSIS					
VOLATILE ORGANICS-624				624	
Vinyl Chloride	ug/L	10	ND		02/18/93

9800 Kincey Avenue, Suite 100
Huntersville, NC 28078
TEL: 704-875-9092
FAX: 704-875-9091

An Equal Opportunity Employer

pace INCORPORATED
THE ASSURANCE OF QUALITY

REPORT OF LABORATORY ANALYSIS

Mr. Barry Nelson
Page 11

February 24, 1993
PACE Project Number: 630216502

Client Reference: J.L De Ball-Girmes 121.001

PACE Sample Number:			92 0188683		
Date Collected:			02/12/93		
Date Received:			02/16/93		
Client Sample ID:			MW-8		
Parameter	Units	MDL		METHOD	DATE ANALYZED
ORGANIC ANALYSIS					
VOLATILE ORGANICS-624				624	
Date Analyzed			021893		02/18/93
Benzene	ug/L	5.0	ND		02/18/93
Bromodichloromethane	ug/L	5.0	ND		02/18/93
Bromoform	ug/L	5.0	ND		02/18/93
Bromomethane	ug/L	10	ND		02/18/93
Carbon tetrachloride	ug/L	5.0	ND		02/18/93
Chlorobenzene	ug/L	5.0	ND		02/18/93
Chloroethane	ug/L	10	ND		02/18/93
2-Chloroethylvinyl ether	ug/L	10	ND		02/18/93
Chloroform	ug/L	5.0	ND		02/18/93
Chloromethane	ug/L	10	ND		02/18/93
Dibromochloromethane	ug/L	5.0	ND		02/18/93
1,2-Dichlorobenzene	ug/L	5.0	ND		02/18/93
1.3-Dichlorobenzene	ug/L	5.0	ND		02/18/93
1,4-Dichlorobenzene	ug/L	5.0	ND		02/18/93
1,1-Dichloroethane	ug/L	5.0	ND		02/18/93
1,2-Dichloroethane	ug/L	5.0	ND		02/18/93
1,1-Dichloroethylene	ug/L	5.0	ND		02/18/93
Total 1,2-dichloroethylene	ug/L	5.0	ND		02/18/93
1,2-Dichloropropane	ug/L	5.0	ND		02/18/93
Cis-1,3-dichloropropene	ug/L	5.0	ND		02/18/93
Trans-1,3-dichloropropene	ug/L	5.0	ND		02/18/93
Ethyl Benzene	ug/L	5.0	ND		02/18/93
Methylene chloride	ug/L	5.0	ND		02/18/93
1,1,2,2-Tetrachloroethane	ug/L	5.0	ND		02/18/93
Tetrachloroethylene	ug/L	5.0	ND		02/18/93
Toluene	ug/L	5.0	ND		02/18/93
1,1,1-Trichloroethane	ug/L	5.0	ND		02/18/93
1,1,2-Trichloroethane	ug/L	5.0	ND		02/18/93
Trichloroethylene	ug/L	5.0	ND		02/18/93
Trichlorofluoromethane	ug/L	10	ND		02/18/93

9800 Kincey Avenue, Suite 100
Huntersville, NC 28078
TEL: 704-875-9092
FAX: 704-875-9091

An Equal Opportunity Employer

pace INCORPORATED
THE ASSURANCE OF QUALITY

REPORT OF LABORATORY ANALYSIS

February 24, 1993
PACE Project Number: 630216502

Client Reference: J.L De Ball-Girmes 121.001

PACE Sample Number:			92 0188683		
Date Collected:			02/12/93		
Date Received:			02/16/93		
Client Sample ID:			MW-8		
Parameter	Units	MDL		METHOD	DATE ANALYZED
ORGANIC ANALYSIS					
VOLATILE ORGANICS-624				624	
Vinyl Chloride	ug/L	10	ND		02/18/93

9800 Kincey Avenue, Suite 100
Huntersville, NC 28078
TEL: 704-875-9092
FAX: 704-875-9091

An Equal Opportunity Employer

pace INCORPORATED
THE ASSURANCE OF QUALITY

REPORT OF LABORATORY ANALYSIS

Mr. Barry Nelson
Page 13

February 24, 1993
PACE Project Number: 630216502

Client Reference: J.L De Ball-Girmes 121.001

PACE Sample Number:			92 0188691		
Date Collected:			02/12/93		
Date Received:			02/16/93		
Client Sample ID:			MW-9		
Parameter	Units	MDL		METHOD	DATE ANALYZED
ORGANIC ANALYSIS					
VOLATILE ORGANICS-624				624	
Date Analyzed	ug/L		021993		02/19/93
Benzene	ug/L	5.0	ND		02/19/93
Bromodichloromethane	ug/L	5.0	ND		02/19/93
Bromoform	ug/L	5.0	ND		02/19/93
Bromomethane	ug/L	5.0	ND		02/19/93
Carbon tetrachloride	ug/L	5.0	ND		02/19/93
Chlorobenzene	ug/L	5.0	ND		02/19/93
Chloroethane	ug/L	10	ND		02/19/93
2-Chloroethylvinyl ether	ug/L	10	ND		02/19/93
Chloroform	ug/L	5.0	ND		02/19/93
loromethane	ug/L	10	ND		02/19/93
Dibromochloromethane	ug/L	5.0	ND		02/19/93
1,2-Dichlorobenzene	ug/L	5.0	ND		02/19/93
1.3-Dichlorobenzene	ug/L	5.0	ND		02/19/93
1,4-Dichlorobenzene	ug/L	5.0	ND		02/19/93
1,1-Dichloroethane	ug/L	5.0	ND		02/19/93
1,2-Dichloroethane	ug/L	5.0	ND		02/19/93
1,1-Dichloroethylene	ug/L	5.0	ND		02/19/93
Total 1,2-dichloroethylene	ug/L	5.0	99		02/19/93
1,2-Dichloropropane	ug/L	5.0	ND		02/19/93
Cis-1,3-dichloropropene	ug/L	5.0	ND		02/19/93
Trans-1,3-dichloropropene	ug/L	5.0	ND		02/19/93
Ethyl Benzene	ug/L	5.0	ND		02/19/93
Methylene chloride	ug/L	5.0	ND		02/19/93
1,1,2,2-Tetrachloroethane	ug/L	5.0	ND		02/19/93
Tetrachloroethylene	ug/L	5.0	ND		02/19/93
Toluene	ug/L	5.0	ND		02/19/93
1,1,1-Trichloroethane	ug/L	5.0	ND		02/19/93
1,1,2-Trichloroethane	ug/L	5.0	ND		02/19/93
Trichloroethylene	ug/L	250	4300		02/19/93
Trichlorofluoromethane	ug/L	10	ND		02/19/93

9800 Kincey Avenue, Suite 100
Huntersville, NC 28078
TEL: 704-875-9092
FAX: 704-875-9091

An Equal Opportunity Employer

pace INCORPORATED
THE ASSURANCE OF QUALITY

REPORT OF LABORATORY ANALYSIS

Mr. Barry Nelson
Page 14

February 24, 1993
PACE Project Number: 630216502

Client Reference: J.L De Ball-Girmes 121.001

PACE Sample Number:			92 0188691		
Date Collected:			02/12/93		
Date Received:			02/16/93		
Client Sample ID:			MW-9		
Parameter	Units	MDL		METHOD	DATE ANALYZED
ORGANIC ANALYSIS					
VOLATILE ORGANICS-624				624	
Vinyl Chloride	ug/L	10	ND		02/19/93

9800 Kincey Avenue, Suite 100
Huntersville, NC 28078
TEL: 704-875-9092
FAX: 704-875-9091

An Equal Opportunity Employer

REPORT OF LABORATORY ANALYSIS

Mr. Barry Nelson
Page 15

February 24, 1993
PACE Project Number: 630216502

Client Reference: J.L De Ball-Girmes 121.001

PACE Sample Number:			92 0188705		
Date Collected:			02/12/93		
Date Received:			02/16/93		
Client Sample ID:			MW-10		
Parameter	Units	MDL		METHOD	DATE ANALYZED
ORGANIC ANALYSIS					
VOLATILE ORGANICS-624				624	
Date Analyzed	ug/L		021993		02/19/93
Benzene	ug/L	5.0	ND		02/19/93
Bromodichloromethane	ug/L	5.0	ND		02/19/93
Bromoform	ug/L	5.0	ND		02/19/93
Bromomethane	ug/L	5.0	ND		02/19/93
Carbon tetrachloride	ug/L	5.0	ND		02/19/93
Chlorobenzene	ug/L	5.0	ND		02/19/93
Chloroethane	ug/L	10	ND		02/19/93
2-Chloroethylvinyl ether	ug/L	10	ND		02/19/93
Chloroform	ug/L	5.0	ND		02/19/93
Chloromethane	ug/L	10	ND		02/19/93
Dibromochloromethane	ug/L	5.0	ND		02/19/93
1,2-Dichlorobenzene	ug/L	5.0	ND		02/19/93
1,3-Dichlorobenzene	ug/L	5.0	ND		02/19/93
1,4-Dichlorobenzene	ug/L	5.0	ND		02/19/93
1,1-Dichloroethane	ug/L	5.0	ND		02/19/93
1,2-Dichloroethane	ug/L	5.0	ND		02/19/93
1,1-Dichloroethylene	ug/L	5.0	ND		02/19/93
Total 1,2-dichloroethylene	ug/L	100	1400		02/19/93
1,2-Dichloropropane	ug/L	5.0	ND		02/19/93
Cis-1,3-dichloropropene	ug/L	5.0	ND		02/19/93
Trans-1,3-dichloropropene	ug/L	5.0	ND		02/19/93
Ethyl Benzene	ug/L	5.0	ND		02/19/93
Methylene chloride	ug/L	5.0	ND		02/19/93
1,1,2,2-Tetrachloroethane	ug/L	5.0	ND		02/19/93
Tetrachloroethylene	ug/L	5.0	ND		02/19/93
Toluene	ug/L	5.0	ND		02/19/93
1,1,1-Trichloroethane	ug/L	5.0	ND		02/19/93
1,1,2-Trichloroethane	ug/L	5.0	ND		02/19/93
Trichloroethylene	ug/L	100	240		02/19/93
Trichlorofluoromethane	ug/L	10	ND		02/19/93

9800 Kincey Avenue, Suite 100
Huntersville, NC 28078
TEL: 704-875-9092
FAX: 704-875-9091

An Equal Opportunity Employer

pace INCORPORATED
THE ASSURANCE OF QUALITY

REPORT OF LABORATORY ANALYSIS

..r. Barry Nelson
Page 16

February 24, 1993
PACE Project Number: 630216502

Client Reference: J.L De Ball-Girmes 121.001

PACE Sample Number:			92 0188705		
Date Collected:			02/12/93		
Date Received:			02/16/93		
Client Sample ID:			MW-10		
Parameter	Units	MDL		METHOD	DATE ANALYZED
ORGANIC ANALYSIS					
VOLATILE ORGANICS-624				624	
Vinyl Chloride	ug/L	10	18		02/19/93

These data have been reviewed and are approved for release.

Margaret S. Harding
Manager, Organic Chemistry

9800 Kincey Avenue, Suite 100
Huntersville, NC 28078
TEL: 704-875-9092
FAX: 704-875-9091

An Equal Opportunity Employer

Mr. Barry Nelson
Page 17

FOOTNOTES
for pages 1 through 16

February 24, 1993
PACE Project Number: 630216502

Client Reference: J.L De Ball-Girmes 121.001

MDL Method Detection Limit
ND Not detected at or above the MDL.

9800 Kincey Avenue, Suite 100
Huntersville, NC 28078
TEL: 704-875-9092
FAX: 704-875-9091

An Equal Opportunity Employer

QUALITY CONTROL DATA

February 24, 1993
PACE Project Number: 630216502

Client Reference: J.L De Ball-Girmes 121.001

EXTRACTABLE ORGANICS BY EPA 8270 GC/MS
Batch: 60 19391
Samples: 92 0188640, 92 0188667

METHOD BLANK:

Parameter	Units	MDL	Method Blank
Phenol	ug/L	10	ND
Bis(2-Chloroethyl)ether	ug/L	10	ND
2-Chlorophenol	ug/L	10	ND
1,3-Dichlorobenzene	ug/L	10	ND
1,4-Dichlorobenzene	ug/L	10	ND
Benzyl Alcohol	ug/L	10	ND
1,2-Dichlorobenzene	ug/L	10	ND
2-Methylphenol	ug/L	10	ND
Bis(2-Chloroisopropyl)ether	ug/L	10	ND
4-Methylphenol	ug/L	10	ND
N-Nitrosodi-n-Propylamine	ug/L	10	ND
xachloroethane	ug/L	10	ND
Nitrobenzene	ug/L	10	ND
Isophorone	ug/L	10	ND
2-Nitrophenol	ug/L	10	ND
2,4-Dimethylphenol	ug/L	10	ND
Benzoic Acid	ug/L	50	ND
Bis(2-Chloroethoxy)methane	ug/L	10	ND
2,4-Dichlorophenol	ug/L	10	ND
1,2,4-Trichlorobenzene	ug/L	10	ND
Naphthalene	ug/L	10	ND
4-Chloroaniline	ug/L	10	ND
Hexachlorobutadiene	ug/L	10	ND
Parachlorometacresol	ug/L	10	ND
2-Methylnaphthalene	ug/L	10	ND
Hexachlorocyclopentadiene	ug/L	10	ND
2,4,6-Trichlorophenol	ug/L	10	ND
2,4,5-Trichlorophenol	ug/L	10	ND
2-Chloronaphthalene	ug/L	10	ND
2-Nitroaniline	ug/L	50	ND
Dimethyl Phthalate	ug/L	10	ND
Acenaphthylene	ug/L	10	ND

. Barry Nelson
Page 19

QUALITY CONTROL DATA

February 24, 1993
PACE Project Number: 630216502

Client Reference: J.L De Ball-Girmes 121.001

EXTRACTABLE ORGANICS BY EPA 8270 GC/MS
Batch: 60 19391
Samples: 92 0188640, 92 0188667

METHOD BLANK:

Parameter	Units	MDL	Method Blank
2,6-Dinitrotoluene	ug/L	10	ND
3-Nitroaniline	ug/L	50	ND
Acenaphthene	ug/L	10	ND
2,4-Dinitrophenol	ug/L	50	ND
4-Nitrophenol	ug/L	50	ND
Dibenzofuran	ug/L	10	ND
2,4-Dinitrotoluene	ug/L	10	ND
Diethyl phthalate	ug/L	10	ND
4-Chlorophenyl-phenylether	ug/L	10	ND
Fluorene	ug/L	10	ND
4-Nitroaniline	ug/L	50	ND
4,6-Dinitro-o-cresol	ug/L	50	ND
N-Nitrosodiphenylamine	ug/L	10	ND
4-Bromophenyl phenyl ether	ug/L	10	ND
Hexachlorobenzene	ug/L	10	ND
Pentachlorophenol	ug/L	50	ND
Phenanthrene	ug/L	10	ND
Anthracene	ug/L	10	ND
Di-n-butyl phthalate	ug/L	10	ND
Fluoranthene	ug/L	10	ND
Pyrene	ug/L	10	ND
Butyl benzyl phthalate	ug/L	10	ND
3,3'-Dichlorobenzidine	ug/L	20	ND
Benzo(a)anthracene	ug/L	10	ND
Chrysene	ug/L	10	ND
Bis(2-ethylhexyl)phthalate	ug/L	10	ND
Di-n-octyl phthalate	ug/L	10	ND
Benzo(b)fluoranthene	ug/L	10	ND
Benzo(k)fluoranthene	ug/L	10	ND
Benzo(a)pyrene	ug/L	10	ND
Indeno(1,2,3-cd)pyrene	ug/L	10	ND
Dibenzo(a,h)anthracene	ug/L	10	ND

REPORT OF LABORATORY ANALYSIS

. Barry Nelson
.age 20

QUALITY CONTROL DATA

February 24, 1993
PACE Project Number: 630216502

Client Reference: J.L De Ball-Girmes 121.001

EXTRACTABLE ORGANICS BY EPA 8270 GC/MS
Batch: 60 19391
Samples: 92 0188640, 92 0188667

METHOD BLANK:

Parameter	Units	MDL	Method Blank
Benzo(g,h,i)perylene	ug/L	10	ND
Nitrobenzene-D5 (Surrogate)	%		68
2-Fluorobiphenyl (Surrogate)	%		61
Terphenyl-D14 (Surrogate)	%		87
Phenol-D6 (Surrogate)	%		63
2-Fluorophenol (Surrogate)	%		64
2,4,6-Tribromophenol (Surrogate)	%		88

SPIKE AND SPIKE DUPLICATE:

rameter	Units	MDL	920174488	Spike	Spike Recv	Spike Dupl Recv	RPD
Phenol	ug/L	10	25	150	57%	65%	13%
2-Chlorophenol	ug/L	10	ND	150	58%	61%	5%
1,4-Dichlorobenzene	ug/L	10	ND	100	66%	69%	4%
N-Nitrosodi-n-Propylamine	ug/L	10	ND	100	92%	101%	9%
1,2,4-Trichlorobenzene	ug/L	10	ND	100	78%	82%	5%
Parachlorometacresol	ug/L	10	ND	150	83%	91%	9%
Acenaphthene	ug/L	10	ND	100	79%	80%	1%
4-Nitrophenol	ug/L	50	ND	150	135%	157%	15%
2,4-Dinitrotoluene	ug/L	10	ND	100	120%	129%	7%
Pentachlorophenol	ug/L	50	ND				
Pyrene	ug/L	10	ND	100	97%	102%	5%

LABORATORY CONTROL SAMPLE:

Parameter	Units	MDL	Reference Value	Recv
Phenol	ug/L	10	150	60%
2-Chlorophenol	ug/L	10	150	61%
1,4-Dichlorobenzene	ug/L	10	100	68%
N-Nitrosodi-n-Propylamine	ug/L	10	100	96%
1,2,4-Trichlorobenzene	ug/L	10	100	79%
Parachlorometacresol	ug/L	10	150	87%

REPORT OF LABORATORY ANALYSIS

. Barry Nelson
Page 21

QUALITY CONTROL DATA

February 24, 1993
PACE Project Number: 630216502

Client Reference: J.L De Ball-Girmes 121.001

EXTRACTABLE ORGANICS BY EPA 8270 GC/MS
Batch: 60 19391
Samples: 92 0188640, 92 0188667

LABORATORY CONTROL SAMPLE:

Parameter	Units	MDL	Reference Value	Recv
Acenaphthene	ug/L	10	100	76%
4-Nitrophenol	ug/L	50	150	107%
2,4-Dinitrotoluene	ug/L	10	100	127%
Pyrene	ug/L	10	100	102%

REPORT OF LABORATORY ANALYSIS

Mr. Barry Nelson
Page 22

QUALITY CONTROL DATA

February 24, 1993
PACE Project Number: 630216502

Client Reference: J.L De Ball-Girmes 121.001

VOLATILE ORGANICS, EPA METHOD 624
Batch: 60 19386
Samples: 92 0188640, 92 0188659, 92 0188667, 92 0188675, 92 0188683

METHOD BLANK:

Parameter	Units	MDL	Method Blank
Methyl chloride (Chloromethane)	ug/L	10	ND
Methyl bromide (Bromomethane)	ug/L	10	ND
Vinyl Chloride	ug/L	10	ND
Chloroethane	ug/L	10	ND
Methylene Chloride	ug/L	5	ND
1,1-Dichloroethylene	ug/L	5	ND
1,1-Dichloroethane	ug/L	5	ND
1,2-Dichloroethylene (Total)	ug/L	5	ND
Chloroform	ug/L	5	ND
1,2-Dichloroethane	ug/L	5	ND
1,1,1-Trichloroethane	ug/L	5	ND
Carbon Tetrachloride	ug/L	5	ND
Dichlorobromomethane	ug/L	5	ND
1,2-Dichloropropane	ug/L	5	ND
Cis-1,3-Dichloropropene	ug/L	5	ND
Trichloroethylene	ug/L	5	ND
Chlorodibromomethane	ug/L	5	ND
1,1,2-Trichloroethane	ug/L	5	ND
Benzene	ug/L	5	ND
Trans-1,3-Dichloropropene	ug/L	5	ND
Bromoform	ug/L	5	ND
Tetrachloroethylene	ug/L	5	ND
1,1,2,2-Tetrachloroethane	ug/L	5	ND
Toluene	ug/L	5	ND
Chlorobenzene	ug/L	5	ND
Ethylbenzene	ug/L	5	ND
Trichlorofluoromethane	ug/L	5	ND
2-Chloroethylvinyl ether (mixed)	ug/L	5	ND
1,3-Dichlorobenzene	ug/L	5	ND
1,4-Dichlorobenzene	ug/L	5	ND
1,2-Dichlorobenzene	ug/L	5	ND
1,2-Dichloroethane-d4 (Surrogate)	%		86

9800 Kincey Avenue, Suite 100
Huntersville, NC 28078
TEL: 704-875-9092
FAX: 704-875-9091

An Equal Opportunity Employer

QUALITY CONTROL DATA

February 24, 1993
PACE Project Number: 630216502

Client Reference: J.L De Ball-Girmes 121.001

VOLATILE ORGANICS, EPA METHOD 624
Batch: 60 19386
Samples: 92 0188640, 92 0188659, 92 0188667, 92 0188675, 92 0188683

METHOD BLANK:

Parameter	Units	MDL	Method Blank
Toluene-d8 (Surrogate)	%		92
4-Bromofluorobenzene (Surrogate)	%		87

SPIKE AND SPIKE DUPLICATE:

Parameter	Units	MDL	600013713	Spike	Spike Recv	Spike Dupl Recv	RPD
1,1-Dichloroethylene	ug/L	5	ND	50.00	121%	111%	8%
Trichloroethylene	ug/L	5	ND	50.00	103%	103%	0%
Benzene	ug/L	5	ND	50.00	83%	90%	8%
Toluene	ug/L	5	ND	50.00	77%	78%	1%
Chlorobenzene	ug/L	5	ND	50.00	84%	87%	3%

LABORATORY CONTROL SAMPLE:

Parameter	Units	MDL	Reference Value	Recv
Methyl chloride (Chloromethane)	ug/L	10	50	134%
Methyl bromide (Bromomethane)	ug/L	10	50	109%
Vinyl Chloride	ug/L	10	50	117%
Chloroethane	ug/L	10	50	109%
Methylene Chloride	ug/L	5	50	81%
Carbon Disulfide	ug/L	5	50	84%
1,1-Dichloroethylene	ug/L	5	50	87%
1,1-Dichloroethane	ug/L	5	50	88%
1,2-Dichloroethylene (Total)	ug/L	5	100	103%
Chloroform	ug/L	5	50	88%
1,2-Dichloroethane	ug/L	5	50	91%
2-Butanone (MEK)	ug/L	5	50	94%
1,1,1-Trichloroethane	ug/L	5	50	91%
Carbon Tetrachloride	ug/L	5	50	96%
Dichlorobromomethane	ug/L	5	50	94%
1,2-Dichloropropane	ug/L	5	50	94%
Cis-1,3-Dichloropropene	ug/L	5	50	83%

Mr. Barry Nelson
Page 24

QUALITY CONTROL DATA

February 24, 1993
PACE Project Number: 630216502

Client Reference: J.L De Ball-Girmes 121.001

VOLATILE ORGANICS, EPA METHOD 624
Batch: 60 19386
Samples: 92 0188640, 92 0188659, 92 0188667, 92 0188675, 92 0188683

LABORATORY CONTROL SAMPLE:

Parameter	Units	MDL	Reference Value	Recv
Trichloroethylene	ug/L	5	50	98%
Chlorodibromomethane	ug/L	5	50	98%
1,1,2-Trichloroethane	ug/L	5	50	102%
Benzene	ug/L	5	50	80%
Trans-1,3-Dichloropropene	ug/L	5	50	56%
Bromoform	ug/L	5	50	97%
4-Methyl-2-Pentanone (MIBK)	ug/L	5	50	94%
2-Hexanone	ug/L	5	50	135%
Tetrachloroethylene	ug/L	5	50	98%
1,1,2,2-Tetrachloroethane	ug/L	5	50	82%
Toluene	ug/L	5	50	75%
Chlorobenzene	ug/L	5	50	84%
Ethylbenzene	ug/L	5	50	77%
Styrene	ug/L	5	50	80%
Xylenes (Total)	ug/L	5	150	76%

9800 Kincey Avenue, Suite 100
Huntersville, NC 28078
TEL: 704-875-9092
FAX: 704-875-9091

An Equal Opportunity Employer

Mr. Barry Nelson
Page 25

QUALITY CONTROL DATA

February 24, 1993
PACE Project Number: 630216502

Client Reference: J.L De Ball-Girmes 121.001

VOLATILE ORGANICS, EPA METHOD 624
Batch: 60 19401
Samples: 92 0188691, 92 0188705

METHOD BLANK:

Parameter	Units	MDL	Method Blank
Methyl chloride (Chloromethane)	ug/L	10	ND
Methyl bromide (Bromomethane)	ug/L	10	ND
Vinyl Chloride	ug/L	10	ND
Chloroethane	ug/L	10	ND
Methylene Chloride	ug/L	5	ND
1,1-Dichloroethylene	ug/L	5	ND
1,1-Dichloroethane	ug/L	5	ND
1,2-Dichloroethylene (Total)	ug/L	5	ND
Chloroform	ug/L	5	ND
1,2-Dichloroethane	ug/L	5	ND
1,1,1-Trichloroethane	ug/L	5	ND
Carbon Tetrachloride	ug/L	5	ND
Dichlorobromomethane	ug/L	5	ND
1,2-Dichloropropane	ug/L	5	ND
Cis-1,3-Dichloropropene	ug/L	5	ND
Trichloroethylene	ug/L	5	ND
Chlorodibromomethane	ug/L	5	ND
1,1,2-Trichloroethane	ug/L	5	ND
Benzene	ug/L	5	ND
Trans-1,3-Dichloropropene	ug/L	5	ND
Bromoform	ug/L	5	ND
Tetrachloroethylene	ug/L	5	ND
1,1,2,2-Tetrachloroethane	ug/L	5	ND
Toluene	ug/L	5	ND
Chlorobenzene	ug/L	5	ND
Ethylbenzene	ug/L	5	ND
Trichlorofluoromethane	ug/L	5	ND
2-Chloroethylvinyl ether (mixed)	ug/L	5	ND
1,3-Dichlorobenzene	ug/L	5	ND
1,4-Dichlorobenzene	ug/L	5	ND
1,2-Dichlorobenzene	ug/L	5	ND
1,2-Dichloroethane-d4 (Surrogate)	%		96

REPORT OF LABORATORY ANALYSIS

Mr. Barry Nelson
Page 26

QUALITY CONTROL DATA

February 24, 1993
PACE Project Number: 630216502

Client Reference: J.L De Ball-Girmes 121.001

VOLATILE ORGANICS, EPA METHOD 624
Batch: 60 19401
Samples: 92 0188691, 92 0188705

METHOD BLANK:

Parameter	Units	MDL	Method Blank
Toluene-d8 (Surrogate)	%		103
4-Bromofluorobenzene (Surrogate)	%		96

SPIKE AND SPIKE DUPLICATE:

Parameter	Units	MDL	600013713	Spike	Spike Recv	Spike Dupl Recv	RPD
1,1-Dichloroethylene	ug/L	5	ND	50.00	121%	111%	8%
Trichloroethylene	ug/L	5	ND	50.00	103%	103%	0%
Benzene	ug/L	5	ND	50.00	83%	90%	8%
Toluene	ug/L	5	ND	50.00	77%	78%	1%
Chlorobenzene	ug/L	5	ND	50.00	84%	87%	3%

LABORATORY CONTROL SAMPLE:

Parameter	Units	MDL	Reference Value	Recv
Methyl chloride (Chloromethane)	ug/L	10	50	134%
Methyl bromide (Bromomethane)	ug/L	10	50	109%
Vinyl Chloride	ug/L	10	50	117%
Chloroethane	ug/L	10	50	109%
Methylene Chloride	ug/L	5	50	81%
Carbon Disulfide	ug/L	5	50	84%
1,1-Dichloroethylene	ug/L	5	50	87%
1,1-Dichloroethane	ug/L	5	50	88%
1,2-Dichloroethylene (Total)	ug/L	5	100	103%
Chloroform	ug/L	5	50	88%
1,2-Dichloroethane	ug/L	5	50	91%
2-Butanone (MEK)	ug/L	5	50	94%
1,1,1-Trichloroethane	ug/L	5	50	91%
Carbon Tetrachloride	ug/L	5	50	96%
Dichlorobromomethane	ug/L	5	50	94%
1,2-Dichloropropane	ug/L	5	50	94%
Cis-1,3-Dichloropropene	ug/L	5	50	83%

9800 Kincey Avenue, Suite 100
Huntersville, NC 28078
TEL: 704-875-9092
FAX: 704-875-9091

An Equal Opportunity Employer

REPORT OF LABORATORY ANALYSIS

Mr. Barry Nelson
Page 27

QUALITY CONTROL DATA

February 24, 1993
PACE Project Number: 630216502

Client Reference: J.L De Ball-Girmes 121.001

VOLATILE ORGANICS, EPA METHOD 624
Batch: 60 19401
Samples: 92 0188691, 92 0188705

LABORATORY CONTROL SAMPLE:

Parameter	Units	MDL	Reference Value	Recv
Trichloroethylene	ug/L	5	50	98%
Chlorodibromomethane	ug/L	5	50	98%
1,1,2-Trichloroethane	ug/L	5	50	102%
Benzene	ug/L	5	50	80%
Trans-1,3-Dichloropropene	ug/L	5	50	56%
Bromoform	ug/L	5	50	97%
4-Methyl-2-Pentanone (MIBK)	ug/L	5	50	94%
2-Hexanone	ug/L	5	50	135%
Tetrachloroethylene	ug/L	5	50	98%
1,1,2,2-Tetrachloroethane	ug/L	5	50	82%
Toluene	ug/L	5	50	75%
Chlorobenzene	ug/L	5	50	84%
Ethylbenzene	ug/L	5	50	77%
Styrene	ug/L	5	50	80%
Xylenes (Total)	ug/L	5	150	76%

9800 Kincey Avenue, Suite 100
Huntersville, NC 28078
TEL: 704-875-9092
FAX: 704-875-9091

An Equal Opportunity Employer

REPORT OF LABORATORY ANALYSIS

. Barry Nelson
.age 28

FOOTNOTES
for pages 18 through 27

February 24, 1993
PACE Project Number: 630216502

Client Reference: J.L De Ball-Girmes 121.001

MDL	Method Detection Limit
ND	Not detected at or above the MDL.
RPD	Relative Percent Difference

9800 Kincey Avenue, Suite 100
Huntersville, NC 28078
TEL: 704-875-9092
FAX: 704-875-9091

An Equal Opportunity Employer

6305 . 502

Sheet 1 of 1

BAIN, PALMER & ASSOCIATES, INC.
environmental consultants

(919) 272-9713 2641-G Randleman Rd. Greensboro, NC 27406

CHAIN OF CUSTODY RECORD

Sample No.	Description/Location	Date	Time	Grab	Comp	No. of Containers	Preservative	MATRIX soil	MATRIX water	ANALYSES REQUESTED 624	Base Neutrals 625							
mw-1	J.L. De Ball-Girmes	2-12	2:15p			4-40ml 1-litre	Ice		✓	✓	✓							18864
mw-2	" "	2-12	2:30p			4-40ml	Ice		✓	✓								18865
mw-6	" "	2-12	3:00p			4-40ml 1-litre	Ice		✓	✓	✓							18866
mw-7	" "	2-12	1 pm			4-40ml	Ice		✓	✓								18867
mw-8	" "	2-12	1:15p			4-40ml	Ice		✓	✓								18868
mw-9	" "	2-12	1:30p			4-40ml	Ice		✓	✓								18869
mw-10	" "	2-12	1:45p			4-40ml	Ice		✓	✓								18870

SPECIAL INSTRUCTIONS:

* Preliminary Results Due Friday Feb. 19
Call Barry Nelson or Ken Vanhoy if Ques. Problems.

FIELD OBSERVATIONS: no odors detected on water samples

Items/Reason	Relinquished By	Received By	Date	Time
mw 1, 2, 6, 7, 8 9 + 10	Ken Vanhoy	Fed Ex	2/15	7:00

Items/Reason	Relinquished By	Received By	Date	Time
		Jennifer Carick	2/15	

PROJECT QUOTE NO. -

PROJECT RUSH NO. -

PROJECT MANAGER Barry Nelson

PROJECT NAME J.L. De Ball-Girmes

PROJECT NUMBER 121.001

SAMPLER(S) Ken Vanhoy

APPENDIX F

SUMMARY OF PHASE II SOIL AND GROUNDWATER RESULTS (SM&E) AND SITE SENSITIVITY EVALUATION

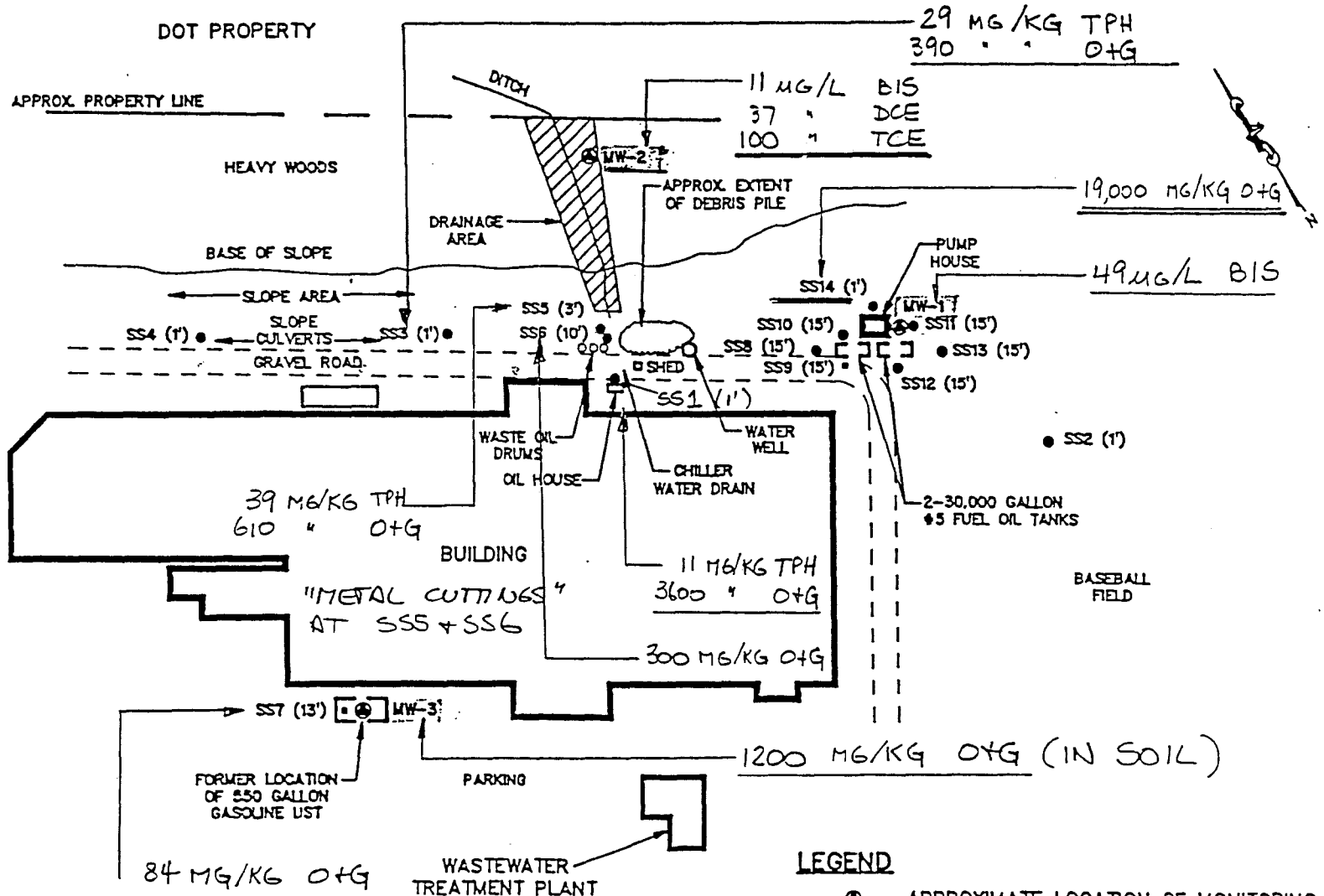

JOB NO.: 1414-92-186
DATE: 12-29-92
SCALE: 0 FEET 150
CAD FILE: 1492186.DWG

S&ME

TITLE: FIGURE 2
SITE PLAN
GIRMES AMERICA, INC.
ASHEVILLE, NORTH CAROLINA

TABLE 1
LABORATORY RESULTS
J. L. DE BALL - GIRMES FACILITY
ASHEVILLE, NORTH CAROLINA
S&ME PROJECT NO. 1414-92-186

Sample Number	ANALYTICAL PARAMETERS				
	TPH (mg/kg)	O&G (mg/kg)	BIS(2-Ethylhexyl) Phthalate (ug/L)	1,2-Dichloro-ethene (ug/L)	Trichloroethene (ug/L)
SS-1 1'	11	3,600	NA	NA	NA
SS-2 1'	BQL	BQL	NA	NA	NA
SS-3 1'	29	390	NA	NA	NA
SS-4 1'	BQL	BQL	NA	NA	NA
SS-5 3'	39	610	NA	NA	NA
SS-6 10'	BQL	300	NA	NA	NA
SS-7 13'	BQL	84	NA	NA	NA
SS-8 15'	NA	BQL	NA	NA	NA
SS-9 15'	NA	BQL	NA	NA	NA
SS-10 15'	NA	BQL	NA	NA	NA
SS-11 15'	NA	BQL	NA	NA	NA
SS-12 15'	NA	BQL	NA	NA	NA
SS-13 15'	NA	BQL	NA	NA	NA
SS-14 1'	NA	19,000	NA	NA	NA
MW-1	BQL	BQL	49	BQL	BQL
MW-2	BQL	BQL	11	37	100
MW-3 5'	BQL	1,200	NA	NA	NA

mg/kg milligrams/kilogram
ug/L micrograms/liter
O&G Oil and Grease
NA Not Analyzed
BQL Below Quantitation Limit
TPH Total Petroleum Hydrocarbons

Table 1

Site Sensitivity Evaluation (SSE)

Site Characteristics Evaluation (Step 1)

Characteristic	Condition	Rating	
Grain Size*	Gravel Sand Silt Clay	150 100 50 0	50
Are relict structures, sedimentary structures, and/or textures present in the zone of contamination and underlying "soils".	Present and intersecting the water table. Present but not intersecting the water table. None present.	10 5 0	0
Distance from location of deepest contaminated soil** to water table.	5 - 10 feet >10 - 40 feet >40 feet	20 10 0	0
Is the top of bedrock or transmissive indurated sediments located above the water table?	Yes No	20 0	20
Artificial conduits present within the zone of contamination.	Present and intersecting the water table. Present but not intersecting the water table. Not present.	10 5 0	5

Total Site Characteristics Score: 75

* Predominant grain size based on Unified Soil Classification System or U.S. Dept. of Agriculture's Soil Classification Method.

** (>10 ppm TPH by Method 5030; >40 ppm TPH by Method 3550; >250 ppm O&G by Method 9071)

Table 2

Site Sensitivity Evaluation (SSE)

Initial Cleanup Level (Step 2) | Final Cleanup Level (Step 3)

Low Boiling Point Hydrocarbons

Total Site Characteristics Score	Initial Cleanup Level TPFH (ppm) EPA Method 5030
>150	≤10
121-150	20
91-120	40
61-90	60
31-60	80
0-30	100

Select Site Category* →

				Final Cleanup Level
Category A & B (Multiply initial cleanup level by 1)	1	x ____	= ____	ppm
Category C & D (Multiply initial cleanup level by 2)	2	x 100	= 120	ppm
Category E (Multiply initial cleanup level by 3)	3	x ____	= ____	ppm

Medium Boiling Point Hydrocarbons

Total Site Characteristics Score	Initial Cleanup Level TPFH (ppm) EPA Method 3550
>150	≤40
121-150	80
91-120	160
61-90	240
31-60	320
0-30	400

Select Site Category* →

				Final Cleanup Level
Category A & B (Multiply initial cleanup level by 1)	1	x ____	= ____	ppm
Category C & D (Multiply initial cleanup level by 2)	2	x 240	= 480	ppm
Category E (Multiply initial cleanup level by 3)	3	x ____	= ____	ppm

Oil & Grease (O&G)

Total Site Characteristics Score	Initial Cleanup Level O&G (ppm) EPA Method 9071
>150	≤250
121-150	400
91-120	550
61-90	700
31-60	850
0-30	1000

Select Site Category* →

				Final Cleanup Level
Category A & B (Multiply initial cleanup level by 1)	1	x ____	= ____	ppm
Category C & D (Multiply initial cleanup level by 2)	2	x 700	= 1400	ppm
Category E (Multiply initial cleanup level by 3)	3	x ____	= ____	ppm

* See Site Category Descriptions

APPENDIX G

SOIL LABORATORY RESULTS

pace INCORPORATED
THE ASSURANCE OF QUALITY

REPORT OF LABORATORY ANALYSIS

Bain, Palmer & Assoc., Inc.
2641 G Randleman Rd.
Greensboro, NC 27406

March 01, 1993
PACE Project Number: 630216500

Attn: Mr. Barry Nelson

Client Reference: J.L. De Bal Girmes 121.001

PACE Sample Number:			92 0188560		
Date Collected:			02/11/93		
Date Received:			02/16/93		
			B-1		
Parameter	Units	MDL	4'	METHOD	DATE ANALYZED
INORGANIC ANALYSIS					
INDIVIDUAL PARAMETERS					
Oils & Grease by Soxhlet Extraction	mg/kg	10	1240	SW846-9071	02/24/93

9800 Kincey Avenue, Suite 100
Huntersville, NC 28078
TEL: 704-875-9092
FAX: 704-875-9091

An Equal Opportunity Employer

pace INCORPORATED
THE ASSURANCE OF QUALITY

REPORT OF LABORATORY ANALYSIS

Mr. Barry Nelson
Page 2

March 01, 1993
PACE Project Number: 630216500

Client Reference: J.L. De Bal Girmes 121.001

PACE Sample Number:			92 0188578		
Date Collected:			02/11/93		
Date Received:			02/16/93		
Client Sample ID:			B-2		
Parameter	Units	MDL	4'	METHOD	DATE ANALYZED
INORGANIC ANALYSIS					
INDIVIDUAL PARAMETERS					
Oils & Grease by Soxhlet Extraction	mg/kg	10	28300	SW846-9071	02/24/93

9800 Kincey Avenue, Suite 100
Huntersville, NC 28078
TEL: 704-875-9092
FAX: 704-875-9091

An Equal Opportunity Employer

pace INCORPORATED
THE ASSURANCE OF QUALITY

REPORT OF LABORATORY ANALYSIS

Mr. Barry Nelson
Page 8

March 01, 1993
PACE Project Number: 630216500

Client Reference: J.L. De Bal Girmes 121.001

PACE Sample Number:			92 0188594		
Date Collected:			02/15/93		
Date Received:			02/16/93		
Client Sample ID:			B-3		
Parameter	Units	MDL	5.5-6'	METHOD	DATE ANALYZED
INORGANIC ANALYSIS					
INDIVIDUAL PARAMETERS					
Oils & Grease by Soxhlet Extraction	mg/kg	10	190	SW846-9071	02/24/93

9800 Kincey Avenue, Suite 100
Huntersville, NC 28078
TEL: 704-875-9092
FAX: 704-875-9091

An Equal Opportunity Employer

pace INCORPORATED
THE ASSURANCE OF QUALITY

REPORT OF LABORATORY ANALYSIS

Mr. Barry Nelson
Page 9

March 01, 1993
PACE Project Number: 630216500

Client Reference: J.L. De Bal Girmes 121.001

PACE Sample Number:			92 0188608		
Date Collected:			02/15/93		
Date Received:			02/16/93		
Client Sample ID:			B-4		
Parameter	Units	MDL	5.5-6'	METHOD	DATE ANALYZED
INORGANIC ANALYSIS					
INDIVIDUAL PARAMETERS					
Oils & Grease by Soxhlet Extraction	mg/kg	10	70	SW846-9071	02/24/93

9800 Kincey Avenue, Suite 100
Huntersville, NC 28078
TEL: 704-875-9092
FAX: 704-875-9091

An Equal Opportunity Employer

pace INCORPORATED
THE ASSURANCE OF QUALITY

REPORT OF LABORATORY ANALYSIS

Mr. Barry Nelson
Page 10

March 01, 1993
PACE Project Number: 630216500

Client Reference: J.L. De Bal Girmes 121.001

PACE Sample Number:			92 0188616		
Date Collected:			02/15/93		
Date Received:			02/16/93		
Client Sample ID:			B-5		
Parameter	Units	MDL	5.5-6'	METHOD	DATE ANALYZED
INORGANIC ANALYSIS					
INDIVIDUAL PARAMETERS					
Oils & Grease by Soxhlet Extraction	mg/kg	10	160	SW846-9071	02/24/93

9800 Kincey Avenue, Suite 100
Huntersville, NC 28078
TEL: 704-875-8002
FAX: 704-875-9091

An Equal Opportunity Employer

pace INCORPORATED
THE ASSURANCE OF QUALITY

REPORT OF LABORATORY ANALYSIS

Mr. Barry Nelson
Page 11

March 01, 1993
PACE Project Number: 630216500

Client Reference: J.L. De Bal Girmes 121.001

PACE Sample Number:			92 0188624		
Date Collected:			02/15/93		
Date Received:			02/16/93		
Client Sample ID:			SW-1		
Parameter	Units	MDL	3.5-4'	METHOD	DATE ANALYZED
INORGANIC ANALYSIS					
INDIVIDUAL PARAMETERS					
Oils & Grease by Soxhlet Extraction	mg/kg	10	2100	SW846-9071	02/24/93

9800 Kincey Avenue, Suite 100
Huntersville, NC 28078
TEL: 704-875-9082
FAX: 704-875-9091

An Equal Opportunity Employer

pace INCORPORATED
THE ASSURANCE OF QUALITY

REPORT OF LABORATORY ANALYSIS

Mr. Barry Nelson
Page 12

March 01, 1993
PACE Project Number: 630216500

Client Reference: J.L. De Bal Girmes 121.001

PACE Sample Number:			92 0188632		
Date Collected:			02/15/93		
Date Received:			02/16/93		
Client Sample ID:			SW-2		
Parameter	Units	MDL	3.5-4'	METHOD	DATE ANALYZED
INORGANIC ANALYSIS					
INDIVIDUAL PARAMETERS					
Oils & Grease by Soxhlet Extraction	mg/kg	10	250	SW846-9071	02/24/93

These data have been reviewed and are approved for release.

Charles M. Cabaniss
Manager, Inorganic Chemistry

Margaret S. Harding
Manager, Organic Chemistry

BAIN, PALMER & ASSOCIATES, INC.
environmental consultants

(919) 272-9713 2641-G Randleman Rd. Greensboro, NC 27406

CHAIN OF CUSTODY RECORD

Sheet 1 of 1

Sample No.	Description/Location	Date	Time	Grab	Comp	No. of Containers	Preservative	MATRIX soil	MATRIX water	ANALYSES REQUESTED 9071	8080	8240	8270					
B-1, 4 ft	J.L. De Ball - Girmes	2-11	4 pm	✓		1	Ice	✓		✓								18856.0
B-2, 4 ft	" "	2-11	4pm	✓		1	Ice	✓		✓								18857.8
Stockpile	" "	2-15	6:30p		✓	3	Ice			✓	✓	✓	✓					18858.6
B-3 5.5-6'	" "	2-15	5:30p	✓		1	"			✓								18859.4
B-4 5.5-6	" "	2-15	5:35p	✓		1	"			✓								18860.8
B-5 5-5.5'	" "	2-15	5:45p	✓		1	"			✓								18861.6
SW-1 3.5-4'	" "	2-15	5:55	✓		1	"			✓								18862.4
SW-2 3.5-4'	" "	2-15	6:05	✓		1	"			✓								18863.2

SPECIAL INSTRUCTIONS:
Fax Preliminary Results ASAP
Call Barry Nelson or Ken Vanhoy for Ques / Problems.

FIELD OBSERVATIONS: Oil & Grease odors noted in soil samples

Items/Reason	Relinquished By	Received By	Date	Time
B-1 to B-5 SW1, SW2, stockpile	Ken Vanhoy	Fed Ex	2-15	7:00
		Jennifer Carter	2-16	1:00

Items/Reason	Relinquished By	Received By	Date	Time

PROJECT QUOTE NO. -

PROJECT RUSH NO. -

PROJECT MANAGER Barry Nelson

PROJECT NAME J.L. De Ball Girmes

PROJECT NUMBER 121.001

SAMPLER(S) Ken Vanhoy

State of North Carolina
Department of Environment, Health, and Natural Resources

Asheville Regional Office

James B. Hunt, Jr., Governor
Jonathan B. Howes, Secretary

DIVISION OF ENVIRONMENTAL MANAGEMENT

Ann B. Orr
Regional Manager

April 21, 1993

CERTIFIED MAIL
RETURN RECEIPT REQUESTED

P 411 632 934

Mr. Allen G. Belenson
SKF USA, Incorporated
1100 First Avenue
King of Prussia, Pennsylvania 19406

Dear Mr. Belenson:

Subject: Notice of Violation for:
1. Oil Pollution and Hazardous Substances Control Act, N.C. General Statutes 143-215.75 et seq. and;
2. Groundwater Classifications and Standards, Title 15A, N.C. Administrative Code, Subchapter 2L.

The Former SKF, Incorporated Plant
Old Highway 74 East, Asheville
Buncombe County, North Carolina

Based upon analytical data from groundwater monitoring at the subject site and sworn statements from former SKF, Incorporated employees, the Division of Environmental Management (the Division) has reason to believe that you are responsible for activities resulting in violations of North Carolina law. This letter is a standard notification to such a violation under North Carolina law.

Chapter 143, North Carolina General Statutes, authorize and directs the Environmental Management Commission and the North Carolina Department of Environment, Health, and Natural Resources (DEHNR) to protect and preserve the water and air resources of the State. The Division has the delegated authority to enforce adopted pollution control rules and regulations.

pace INCORPORATED
THE ASSURANCE OF QUALITY

REPORT OF LABORATORY ANALYSIS

February 18, 1993
PACE Project Number: 630205504

Client Reference: Girmes

PACE Sample Number:			92-0183851		
Date Collected:			02/04/93		
Date Received:			02/05/93		
Client Sample ID:			MW-4		
Parameter	Units	MDL		METHOD	DATE ANALYZED
ORGANIC ANALYSIS					
VOLATILE ORGANICS-624				624	
Date Analyzed			020993		02/08/93
Benzene	ug/L	50	ND		02/08/93
Bromodichloromethane	ug/L	50	ND		02/08/93
Bromoform	ug/L	50	ND		02/08/93
Bromomethane	ug/L	100	ND		02/08/93
Carbon tetrachloride	ug/L	50	ND		02/08/93
Chlorobenzene	ug/L	50	ND		02/08/93
Chloroethane	ug/L	100	ND		02/08/93
2-Chloroethylvinyl ether	ug/L	100	ND		02/08/93
Chloroform	ug/L	50	ND		02/08/93
Chloromethane	ug/L	100	ND		02/08/93
Dibromochloromethane	ug/L	50	ND		02/08/93
1,2-Dichlorobenzene	ug/L	50	ND		02/08/93
1,3-Dichlorobenzene	ug/L	50	ND		02/08/93
1,4-Dichlorobenzene	ug/L	50	ND		02/08/93
1,1-Dichloroethane	ug/L	50	ND		02/08/93
1,2-Dichloroethane	ug/L	50	ND		02/08/93
1,1-Dichloroethylene	ug/L	50	ND		02/08/93
Total 1,2-dichloroethylene	ug/L	50	ND		02/08/93
1,2-Dichloropropane	ug/L	50	ND		02/08/93
Cis-1,3-dichloropropene	ug/L	50	ND		02/08/93
Trans-1,3-dichloropropene	ug/L	50	ND		02/08/93
Ethyl Benzene	ug/L	50	ND		02/08/93
Methylene chloride	ug/L	50	ND		02/08/93
1,1,2,2-Tetrachloroethane	ug/L	50	ND		02/08/93
Tetrachloroethylene	ug/L	50	ND		02/08/93
Toluene	ug/L	50	ND		02/08/93
1,1,1-Trichloroethane	ug/L	50	ND		02/08/93
1,1,2-Trichloroethane	ug/L	50	ND		02/08/93
Trichloroethylene	ug/L	250	3860		02/08/93
Trichlorofluoromethane	ug/L	100	ND		02/08/93

9800 Kincey Avenue, Suite 100
Huntersville, NC 28078
TEL: 704-875-9092
FAX: 704-875-9091

An Equal Opportunity Employer

pace INCORPORATED
THE ASSURANCE OF QUALITY

REPORT OF LABORATORY ANALYSIS

.r. Ken Vanhoy
Page 4

February 18, 1993
PACE Project Number: 630205504

Client Reference: Girmes

PACE Sample Number:			92 0183851		
Date Collected:			02/04/93		
Date Received:			02/05/93		
Client Sample ID:			MW-4		
Parameter	Units	MDL		METHOD	DATE ANALYZED
ORGANIC ANALYSIS					
VOLATILE ORGANICS-624				624	
Vinyl Chloride	ug/L	100	ND		02/08/93

9800 Kincey Avenue, Suite 100
Huntersville, NC 28078
TEL: 704-875-9092
FAX: 704-875-9091

An Equal Opportunity Employer

pace INCORPORATED
THE ASSURANCE OF QUALITY

REPORT OF LABORATORY ANALYSIS

..r. Ken Vanhoy
Page 5

February 18, 1993
PACE Project Number: 630205504

Client Reference: Girmes

PACE Sample Number:			92 0183860		
Date Collected:			02/04/93		
Date Received:			02/05/93		
Client Sample ID:			MW-5		
Parameter	Units	MDL		METHOD	DATE ANALYZED
ORGANIC ANALYSIS					
VOLATILE ORGANICS-624				624	
Date Analyzed			020993		02/08/93
Benzene	ug/L	50	ND		02/08/93
Bromodichloromethane	ug/L	50	ND		02/08/93
Bromoform	ug/L	50	ND		02/08/93
Bromomethane	ug/L	100	ND		02/08/93
Carbon tetrachloride	ug/L	50	ND		02/08/93
Chlorobenzene	ug/L	50	ND		02/08/93
Chloroethane	ug/L	100	ND		02/08/93
2-Chloroethylvinyl ether	ug/L	100	ND		02/08/93
Chloroform	ug/L	50	ND		02/08/93
loromethane	ug/L	100	ND		02/08/93
ibromochloromethane	ug/L	50	ND		02/08/93
1,2-Dichlorobenzene	ug/L	50	ND		02/08/93
1.3-Dichlorobenzene	ug/L	50	ND		02/08/93
1,4-Dichlorobenzene	ug/L	50	ND		02/08/93
1,1-Dichloroethane	ug/L	50	ND		02/08/93
1,2-Dichloroethane	ug/L	50	ND		02/08/93
1,1-Dichloroethylene	ug/L	50	ND		02/08/93
Total 1,2-dichloroethylene	ug/L	50	ND		02/08/93
1,2-Dichloropropane	ug/L	50	ND		02/08/93
Cis-1,3-dichloropropene	ug/L	50	ND		02/08/93
Trans-1,3-dichloropropene	ug/L	50	ND		02/08/93
Ethyl Benzene	ug/L	50	ND		02/08/93
Methylene chloride	ug/L	50	ND		02/08/93
1,1,2,2-Tetrachloroethane	ug/L	50	ND		02/08/93
Tetrachloroethylene	ug/L	50	ND		02/08/93
Toluene	ug/L	50	ND		02/08/93
1,1,1-Trichloroethane	ug/L	50	ND		02/08/93
1,1,2-Trichloroethane	ug/L	50	ND		02/08/93
Trichloroethylene	ug/L	500	8020		02/08/93
Trichlorofluoromethane	ug/L	10	ND		02/08/93

9800 Kincey Avenue, Suite 100
Huntersville, NC 28078
TEL: 704-875-9092
FAX: 704-875-9091

An Equal Opportunity Employer

pace INCORPORATED
THE ASSURANCE OF QUALITY

REPORT OF LABORATORY ANALYSIS

Mr. Ken Vanhoy
Page 6

February 18, 1993
PACE Project Number: 630205504

Client Reference: Girmes

PACE Sample Number:			92 0183860		
Date Collected:			02/04/93		
Date Received:			02/05/93		
Client Sample ID:			MW-5		
Parameter	Units	MDL		METHOD	DATE ANALYZED
ORGANIC ANALYSIS					
VOLATILE ORGANICS-624				624	
Vinyl Chloride	ug/L	10	ND		02/08/93

These data have been reviewed and are approved for release.

Margaret S. Harding
Manager, Organic Chemistry

9800 Kincey Avenue, Suite 100
Huntersville, NC 28078
TEL: 704-875-9092
FAX: 704-875-9091

An Equal Opportunity Employer

r. Ken Vanhoy
rage 7

FOOTNOTES
for pages 1 through 6

February 18, 1993
PACE Project Number: 630205504

Client Reference: Girmes

MDL Method Detection Limit
ND Not detected at or above the MDL.

9800 Kincey Avenue, Suite 100
Huntersville, NC 28078
TEL: 704-875-9092
FAX: 704-875-9091

An Equal Opportunity Employer

Mr. Ken Vanhoy
Page 8

QUALITY CONTROL DATA

February 18, 1993
PACE Project Number: 630205504

Client Reference: Girmes

VOLATILE ORGANICS
Batch: 75 05324
Samples: 92 0183843, 92 0183851, 92 0183860

METHOD BLANK:

Parameter	Units	MDL	Method Blank
1,1,2-Trichlor-1,2,2-trifluoroethane	ug/L	10	ND
Chloromethane	ug/L	10	ND
Vinyl chloride	ug/L	10	ND
Bromomethane	ug/L	10	ND
Chloroethane	ug/L	10	ND
Trichlorofluoromethane	ug/L	10	ND
1,1-Dichloroethene	ug/L	5	ND
Acetone	ug/L	50	ND
Carbon disulfide	ug/L	5	ND
[illegible]thylene chloride	ug/L	5	ND
[illegible]ans-1,2-Dichloroethene	ug/L	5	ND
1,1-Dichloroethane	ug/L	5	ND
2-Butanone	ug/L	50	ND
cis-1,2-Dichloroethene	ug/L	5	ND
Chloroform	ug/L	5	ND
1,2-Dichloroethane	ug/L	5	ND
1,1,1-Trichloroethane	ug/L	5	ND
Carbon tetrachloride	ug/L	5	ND
Benzene	ug/L	5	ND
Trichloroethene	ug/L	5	ND
1,2-Dichloropropane	ug/L	5	ND
Bromodichloromethane	ug/L	5	ND
cis-1,3-Dichloropropene	ug/L	5	ND
trans-1,3-Dichloropropene	ug/L	5	ND
1,1,2-Trichloroethane	ug/L	5	ND
Dibromochloromethane	ug/L	5	ND
Bromoform	ug/L	5	ND
4-Methyl-2-pentanone	ug/L	50	ND
Toluene	ug/L	5	ND
2-Hexanone	ug/L	50	ND
1,1,2,2-Tetrachloroethane	ug/L	5	ND
[illegible]rachloroethene	ug/L	5	ND

REPORT OF LABORATORY ANALYSIS

Mr. Ken Vanhoy
Page 9

QUALITY CONTROL DATA

February 18, 1993
PACE Project Number: 630205504

Client Reference: Girmes

VOLATILE ORGANICS
Batch: 75 05324
Samples: 92 0183843, 92 0183851, 92 0183860

METHOD BLANK:

Parameter	Units	MDL	Method Blank
Chlorobenzene	ug/L	5	ND
Ethylbenzene	ug/L	5	ND
Styrene	ug/L	5	ND
Xylenes (Total)	ug/L	5	ND
1,3-Dichlorobenzene	ug/L	5	ND
1,4-Dichlorobenzene	ug/L	5	ND
1,2-Dichlorobenzene	ug/L	5	ND
1,2-Dichloroethane-d4 (Surrog. Recovery	%		108
Toluene-d8 (Surrog. Recovery	%		96.6
Bromofluorobenzene (Surrog. Recovery	%		103

SPIKE AND SPIKE DUPLICATE:

Parameter	Units	MDL	920183843 Supply Well	Spike	Spike Recv	Spike Dupl Recv	RPD
1,1-Dichloroethene	ug/L	5	ND	50	89%	88%	1%
Benzene	ug/L	5	ND	50	103%	97%	6%
Trichloroethene	ug/L	5	ND	50	108%	105%	2%
Toluene	ug/L	5	ND	50	103%	99%	3%
Chlorobenzene	ug/L	5	ND	50	105%	97%	7%

LABORATORY CONTROL SAMPLE:

Parameter	Units	MDL	Reference Value	Recv
1,1-Dichloroethene	ug/L	5	50	91%
Benzene	ug/L	5	50	103%
Trichloroethene	ug/L	5	50	99%
Toluene	ug/L	5	50	111%
Chlorobenzene	ug/L	5	50	101%

9800 Kincey Avenue, Suite 100
Huntersville, NC 28078
TEL: 704-875-9092
FAX: 704-875-9091

An Equal Opportunity Employer

Mr. Ken Vanhoy
Page 10

FOOTNOTES
for pages 8 through 9

February 18, 1993
PACE Project Number: 630205504

Client Reference: Girmes

MDL	Method Detection Limit
ND	Not detected at or above the MDL.
RPD	Relative Percent Difference

9800 Kincey Avenue, Suite 100
Huntersville, NC 28078
TEL: 704-875-9092
FAX: 704-875-9091

An Equal Opportunity Employer

PACE INCORPORATED
THE ASSURANCE OF QUALITY

1 433

CHAIN-OF-CUSTODY RECORD
Analytical Request

Client: Bain & Palmer & Assoc.
Address: 2641-G Randleman Rd
Greensboro, NC, 27406
Phone: 272 - 9713

Report To: Ken Vanhoy
Bill To: Bain & Palmer & Assoc.
P.O. # / Billing Reference: 121.001
Project Name / No.: Girmes

Pace Client No.: 112156
Pace Project Manager: JJC
Pace Project No.: 6302055CC
*Requested Due Date:

Sampled By (PRINT): Ken Vanhoy
Kenneth B. Vanhoy 2-4-93
Sampler Signature / Date Sampled

ITEM NO.	SAMPLE DESCRIPTION	TIME	MATRIX	PACE NO.	NO. OF CONTAINERS	PRESERVATIVES: UNPRESERVED	H_2SO_4	HNO_3	VOA 40 ml	ANALYSES REQUEST: 624	REMARKS
1	Supply Well	2-3-93 1:30	H_2O	18384.3	4				✓	✓	
2	MW-4	2-4-93 1:00	H_2O	18385.1	4				✓	✓	
3	MW-5	2-4-93 9:30	H_2O	18386.0	4				✓	✓	
4											
5											
6											
7											
8											

COOLER NOS.	BAILERS	SHIPMENT METHOD OUT / DATE	RETURNED / DATE
1			

ITEM NUMBER	RELINQUISHED BY / AFFILIATION	ACCEPTED BY / AFFILIATION	DATE	TIME
112 3	Ken Vanhoy	Fed Ex	2-4-93	5:45
		Kenneth G. Carrolu	2-5	

Additional Comments
Please call if any Ques.
Ken Vanhoy 272-9713

SEE REVERSE SIDE FOR INSTRUCTIONS

pace
INCORPORATED
THE ASSURANCE OF QUALITY

REPORT OF LABORATORY ANALYSIS

FEB 1993
RECEIVED

February 24, 1993

Mr. Barry Nelson
Bain, Palmer & Assoc., Inc.
2641 G Randleman Rd.
Greensboro, NC 27406

RE: PACE Project No. 630216.502
Client Reference: J.L De Ball-Girmes 121.001

Dear Mr. Nelson:

Enclosed is the report of laboratory analyses for samples received February 16, 1993.

Footnotes are given at the end of the report.

If you have any questions concerning this report, please feel free to contact us.

Sincerely,

Jennifer J. Carriker
Project Manager

Enclosures

9800 Kincey Avenue, Suite 100
Huntersville, NC 28078
TEL: 704-875-9092
FAX: 704-875-9091

An Equal Opportunity Employer

pace INCORPORATED
THE ASSURANCE OF QUALITY

REPORT OF LABORATORY ANALYSIS

.in, Palmer & Assoc., Inc.
2641 G Randleman Rd.
Greensboro, NC 27406

February 24, 1993
PACE Project Number: 630216502

Attn: Mr. Barry Nelson

Client Reference: J.L De Ball-Girmes 121.001

PACE Sample Number:			92 0188640		
Date Collected:			02/12/93		
Date Received:			02/16/93		
			MW-1		
Parameter	Units	MDL		METHOD	DATE ANALYZED
ORGANIC ANALYSIS					
VOLATILE ORGANICS-624				624	
Date Analyzed			021893		02/18/93
Benzene	ug/L	5.0	ND		02/18/93
Bromodichloromethane	ug/L	5.0	ND		02/18/93
Bromoform	ug/L	5.0	ND		02/18/93
Bromomethane	ug/L	10	ND		02/18/93
Carbon tetrachloride	ug/L	5.0	ND		02/18/93
Chlorobenzene	ug/L	5.0	ND		02/18/93
Chloroethane	ug/L	10	ND		02/18/93
Chloroethylvinyl ether	ug/L	10	ND		02/18/93
Chloroform	ug/L	5.0	ND		02/18/93
Chloromethane	ug/L	10	ND		02/18/93
Dibromochloromethane	ug/L	5.0	ND		02/18/93
1,2-Dichlorobenzene	ug/L	5.0	ND		02/18/93
1.3-Dichlorobenzene	ug/L	5.0	ND		02/18/93
1,4-Dichlorobenzene	ug/L	5.0	ND		02/18/93
1,1-Dichloroethane	ug/L	5.0	ND		02/18/93
1,2-Dichloroethane	ug/L	5.0	ND		02/18/93
1,1-Dichloroethylene	ug/L	5.0	ND		02/18/93
Total 1,2-dichloroethylene	ug/L	5.0	ND		02/18/93
1,2-Dichloropropane	ug/L	5.0	ND		02/18/93
Cis-1,3-dichloropropene	ug/L	5.0	ND		02/18/93
Trans-1,3-dichloropropene	ug/L	5.0	ND		02/18/93
Ethyl Benzene	ug/L	5.0	ND		02/18/93
Methylene chloride	ug/L	5.0	ND		02/18/93
1,1,2,2-Tetrachloroethane	ug/L	5.0	ND		02/18/93
Tetrachloroethylene	ug/L	5.0	ND		02/18/93
Toluene	ug/L	5.0	ND		02/18/93
1,1,1-Trichloroethane	ug/L	5.0	ND		02/18/93
1,1,2-Trichloroethane	ug/L	5.0	ND		02/18/93

REPORT OF LABORATORY ANALYSIS

Mr. Barry Nelson
Page 2

February 24, 1993
PACE Project Number: 630216502

Client Reference: J.L De Ball-Girmes 121.001

PACE Sample Number:			92 0188640		
Date Collected:			02/12/93		
Date Received:			02/16/93		
Client Sample ID:			MW-1		
Parameter	Units	MDL		METHOD	DATE ANALYZED
ORGANIC ANALYSIS					
VOLATILE ORGANICS-624				624	
Trichloroethylene	ug/L	5.0	ND		02/18/93
Trichlorofluoromethane	ug/L	10	ND		02/18/93
Vinyl Chloride	ug/L	10	ND		02/18/93
BASE/NEUTRAL SEMIVOLATILE ORGANICS-625B				625	
Date Extracted			021793		02/17/93
Acenaphthene	ug/L	10	ND		02/22/93
Acenaphthylene	ug/L	10	ND		02/22/93
Anthracene	ug/L	10	ND		02/22/93
Benzo(a)anthracene	ug/L	10	ND		02/22/93
Benzo(a)pyrene	ug/L	10	ND		02/22/93
Benzo(b)fluoranthene	ug/L	10	ND		02/22/93
Benzo(k)fluoranthene	ug/L	10	ND		02/22/93
Benzo(g,h,i)perylene	ug/L	10	ND		02/22/93
Bis(2-chloroethoxy)methane	ug/L	10	ND		02/22/93
Bis(2-chloroethyl)ether	ug/L	10	ND		02/22/93
Bis(2-chloroisopropyl)ether	ug/L	10	ND		02/22/93
Bis(2-ethylhexyl)phthalate	ug/L	10	ND		02/22/93
4-Bromophenol phenyl ether	ug/L	10	ND		02/22/93
Benzyl butyl phthalate	ug/L	10	ND		02/22/93
2-Chloronaphthalene	ug/L	10	ND		02/22/93
4-Chlorophenyl phenyl ether	ug/L	10	ND		02/22/93
Chrysene	ug/L	10	ND		02/22/93
Dibenzo(a,h)anthracene	ug/L	10	ND		02/22/93
1,2-Dichlorobenzene	ug/L	10	ND		02/22/93
1,3-Dichlorobenzene	ug/L	10	ND		02/22/93
1,4-Dichlorobenzene	ug/L	10	ND		02/22/93
3,3-Dichlorobenzidine	ug/L	20	ND		02/22/93
Diethyl phthalate	ug/L	10	ND		02/22/93
Dimethyl phthalate	ug/L	10	ND		02/22/93
Di-n-butyl phthalate	ug/L	10	ND		02/22/93
2,4-Dinitrotoluene	ug/L	10	ND		02/22/93

pace INCORPORATED
THE ASSURANCE OF QUALITY

REPORT OF LABORATORY ANALYSIS

Mr. Barry Nelson
Page 3

February 24, 1993
PACE Project Number: 630216502

Client Reference: J.L De Ball-Girmes 121.001

PACE Sample Number:			92 0188640		
Date Collected:			02/12/93		
Date Received:			02/16/93		
Client Sample ID:			MW-1		
Parameter	Units	MDL		METHOD	DATE ANALYZED
ORGANIC ANALYSIS					
BASE/NEUTRAL SEMIVOLATILE ORGANICS-625B				625	
2,6-Dinitrotoluene	ug/L	10	ND		02/22/93
Di-n-octylphthalate	ug/L	10	ND		02/22/93
Fluoranthene	ug/L	10	ND		02/22/93
Fluorene	ug/L	10	ND		02/22/93
Hexachlorobenzene	ug/L	10	ND		02/22/93
Hexachlorobutadiene	ug/L	10	ND		02/22/93
Hexachloroethane	ug/L	10	ND		02/22/93
Indeno(1,2,3,-cd)pyrene	ug/L	10	ND		02/22/93
Isophorone	ug/L	10	ND		02/22/93
Naphthalene	ug/L	10	ND		02/22/93
trobenzene	ug/L	10	ND		02/22/93
N-Nitrosodi-n-propylamine	ug/L	10	ND		02/22/93
N-Nitrosodiphenylamine	ug/L	10	ND		02/22/93
Phenanthrene	ug/L	10	ND		02/22/93
Pyrene	ug/L	10	ND		02/22/93
1,2,4-Trichlorobenzene	ug/L	10	ND		02/22/93
Hexachlorocyclopentadiene	ug/L	10	ND		02/22/93
N-Nitrosodi-n-methylamine	ug/L	10	ND		02/22/93

9800 Kincey Avenue, Suite 100
Huntersville, NC 28078
TEL: 704-875-9092
FAX: 704-875-9091

An Equal Opportunity Employer

REPORT OF LABORATORY ANALYSIS

. Barry Nelson
Page 4

February 24, 1993
PACE Project Number: 630216502

Client Reference: J.L De Ball-Girmes 121.001

PACE Sample Number:			92 0188659		
Date Collected:			02/12/93		
Date Received:			02/16/93		
Client Sample ID:			MW-2		
Parameter	Units	MDL		METHOD	DATE ANALYZED
ORGANIC ANALYSIS					
VOLATILE ORGANICS-624				624	
Date Analyzed			021893		02/18/93
Benzene	ug/L	5.0	ND		02/18/93
Bromodichloromethane	ug/L	5.0	ND		02/18/93
Bromoform	ug/L	5.0	ND		02/18/93
Bromomethane	ug/L	10	ND		02/18/93
Carbon tetrachloride	ug/L	5.0	ND		02/18/93
Chlorobenzene	ug/L	5.0	ND		02/18/93
Chloroethane	ug/L	10	ND		02/18/93
2-Chloroethylvinyl ether	ug/L	10	ND		02/18/93
Chloroform	ug/L	5.0	ND		02/18/93
Chloromethane	ug/L	10	ND		02/18/93
Bromochloromethane	ug/L	5.0	ND		02/18/93
1,2-Dichlorobenzene	ug/L	5.0	ND		02/18/93
1.3-Dichlorobenzene	ug/L	5.0	ND		02/18/93
1,4-Dichlorobenzene	ug/L	5.0	ND		02/18/93
1,1-Dichloroethane	ug/L	5.0	ND		02/18/93
1,2-Dichloroethane	ug/L	5.0	ND		02/18/93
1,1-Dichloroethylene	ug/L	5.0	ND		02/18/93
Total 1,2-dichloroethylene	ug/L	5.0	ND		02/18/93
1,2-Dichloropropane	ug/L	5.0	ND		02/18/93
Cis-1,3-dichloropropene	ug/L	5.0	ND		02/18/93
Trans-1,3-dichloropropene	ug/L	5.0	ND		02/18/93
Ethyl Benzene	ug/L	5.0	ND		02/18/93
Methylene chloride	ug/L	5.0	ND		02/18/93
1,1,2,2-Tetrachloroethane	ug/L	5.0	ND		02/18/93
Tetrachloroethylene	ug/L	5.0	ND		02/18/93
Toluene	ug/L	5.0	ND		02/18/93
1,1,1-Trichloroethane	ug/L	5.0	ND		02/18/93
1,1,2-Trichloroethane	ug/L	5.0	ND		02/18/93
Trichloroethylene	ug/L	5.0	130		02/18/93
Trichlorofluoromethane	ug/L	10	ND		02/18/93

pace INCORPORATED
THE ASSURANCE OF QUALITY

REPORT OF LABORATORY ANALYSIS

.r. Barry Nelson
Page 5

February 24, 1993
PACE Project Number: 630216502

Client Reference: J.L De Ball-Girmes 121.001

PACE Sample Number:			92 0188659		
Date Collected:			02/12/93		
Date Received:			02/16/93		
Client Sample ID:			MW-2		
Parameter	Units	MDL		METHOD	DATE ANALYZED
ORGANIC ANALYSIS					
VOLATILE ORGANICS-624				624	
Vinyl Chloride	ug/L	10	ND		02/18/93

9800 Kincey Avenue, Suite 100
Huntersville, NC 28078
TEL: 704-875-9092
FAX: 704-875-9091

An Equal Opportunity Employer

pace INCORPORATED
THE ASSURANCE OF QUALITY

REPORT OF LABORATORY ANALYSIS

February 24, 1993
PACE Project Number: 630216502

Client Reference: J.L De Ball-Girmes 121.001

PACE Sample Number:			92 0188667		
Date Collected:			02/12/93		
Date Received:			02/16/93		
Client Sample ID:			MW-6		
Parameter	Units	MDL		METHOD	DATE ANALYZED
ORGANIC ANALYSIS					
VOLATILE ORGANICS-624				624	
Date Analyzed			021893		02/18/93
Benzene	ug/L	5.0	ND		02/18/93
Bromodichloromethane	ug/L	5.0	ND		02/18/93
Bromoform	ug/L	5.0	ND		02/18/93
Bromomethane	ug/L	10	ND		02/18/93
Carbon tetrachloride	ug/L	5.0	ND		02/18/93
Chlorobenzene	ug/L	5.0	ND		02/18/93
Chloroethane	ug/L	10	ND		02/18/93
2-Chloroethylvinyl ether	ug/L	10	ND		02/18/93
Chloroform	ug/L	5.0	ND		02/18/93
loromethane	ug/L	10	ND		02/18/93
ibromochloromethane	ug/L	5.0	ND		02/18/93
1,2-Dichlorobenzene	ug/L	5.0	ND		02/18/93
1.3-Dichlorobenzene	ug/L	5.0	ND		02/18/93
1,4-Dichlorobenzene	ug/L	5.0	ND		02/18/93
1,1-Dichloroethane	ug/L	5.0	ND		02/18/93
1,2-Dichloroethane	ug/L	5.0	ND		02/18/93
1,1-Dichloroethylene	ug/L	5.0	ND		02/18/93
Total 1,2-dichloroethylene	ug/L	5.0	ND		02/18/93
1,2-Dichloropropane	ug/L	5.0	ND		02/18/93
Cis-1,3-dichloropropene	ug/L	5.0	ND		02/18/93
Trans-1,3-dichloropropene	ug/L	5.0	ND		02/18/93
Ethyl Benzene	ug/L	5.0	ND		02/18/93
Methylene chloride	ug/L	5.0	ND		02/18/93
1,1,2,2-Tetrachloroethane	ug/L	5.0	ND		02/18/93
Tetrachloroethylene	ug/L	5.0	ND		02/18/93
Toluene	ug/L	5.0	ND		02/18/93
1,1,1-Trichloroethane	ug/L	5.0	ND		02/18/93
1,1,2-Trichloroethane	ug/L	5.0	ND		02/18/93
Trichloroethylene	ug/L	5.0	ND		02/18/93
Trichlorofluoromethane	ug/L	10	ND		02/18/93

9800 Kincey Avenue, Suite 100
Huntersville, NC 28078
TEL: 704-875-9092
FAX: 704-875-9091

An Equal Opportunity Employer

REPORT OF LABORATORY ANALYSIS

Mr. Barry Nelson
Page 7

February 24, 1993
PACE Project Number: 630216502

Client Reference: J.L De Ball-Girmes 121.001

PACE Sample Number:			92 0188667		
Date Collected:			02/12/93		
Date Received:			02/16/93		
Client Sample ID:			MW-6		
Parameter	Units	MDL		METHOD	DATE ANALYZED
ORGANIC ANALYSIS					
VOLATILE ORGANICS-624				624	
Vinyl Chloride	ug/L	10	ND		02/18/93
BASE/NEUTRAL SEMIVOLATILE ORGANICS-625B				625	
Date Extracted			021793		02/17/93
Acenaphthene	ug/L	10	ND		02/22/93
Acenaphthylene	ug/L	10	ND		02/22/93
Anthracene	ug/L	10	ND		02/22/93
Benzo(a)anthracene	ug/L	10	ND		02/22/93
Benzo(a)pyrene	ug/L	10	ND		02/22/93
Benzo(b)fluoranthene	ug/L	10	ND		02/22/93
Benzo(k)fluoranthene	ug/L	10	ND		02/22/93
Benzo(g,h,i)perylene	ug/L	10	ND		02/22/93
Bis(2-chloroethoxy)methane	ug/L	10	ND		02/22/93
Bis(2-chloroethyl)ether	ug/L	10	ND		02/22/93
Bis(2-chloroisopropyl)ether	ug/L	10	ND		02/22/93
Bis(2-ethylhexyl)phthalate	ug/L	10	ND		02/22/93
4-Bromophenol phenyl ether	ug/L	10	ND		02/22/93
Benzyl butyl phthalate	ug/L	10	ND		02/22/93
2-Chloronaphthalene	ug/L	10	ND		02/22/93
4-Chlorophenyl phenyl ether	ug/L	10	ND		02/22/93
Chrysene	ug/L	10	ND		02/22/93
Dibenzo(a,h)anthracene	ug/L	10	ND		02/22/93
1,2-Dichlorobenzene	ug/L	10	ND		02/22/93
1,3-Dichlorobenzene	ug/L	10	ND		02/22/93
1,4-Dichlorobenzene	ug/L	10	ND		02/22/93
3,3-Dichlorobenzidine	ug/L	20	ND		02/22/93
Diethyl phthalate	ug/L	10	ND		02/22/93
Dimethyl phthalate	ug/L	10	ND		02/22/93
Di-n-butyl phthalate	ug/L	10	ND		02/22/93
2,4-Dinitrotoluene	ug/L	10	ND		02/22/93
2,6-Dinitrotoluene	ug/L	10	ND		02/22/93
Di-n-octylphthalate	ug/L	10	ND		02/22/93

pace INCORPORATED
THE ASSURANCE OF QUALITY

REPORT OF LABORATORY ANALYSIS

.r. Barry Nelson
Page 8

February 24, 1993
PACE Project Number: 630216502

Client Reference: J.L De Ball-Girmes 121.001

PACE Sample Number:			92 0188667		
Date Collected:			02/12/93		
Date Received:			02/16/93		
Client Sample ID:			MW-6		
Parameter	Units	MDL		METHOD	DATE ANALYZED
ORGANIC ANALYSIS					
BASE/NEUTRAL SEMIVOLATILE ORGANICS-625B				625	
Fluoranthene	ug/L	10	ND		02/22/93
Fluorene	ug/L	10	ND		02/22/93
Hexachlorobenzene	ug/L	10	ND		02/22/93
Hexachlorobutadiene	ug/L	10	ND		02/22/93
Hexachloroethane	ug/L	10	ND		02/22/93
Indeno(1,2,3,-cd)pyrene	ug/L	10	ND		02/22/93
Isophorone	ug/L	10	ND		02/22/93
Naphthalene	ug/L	10	ND		02/22/93
Nitrobenzene	ug/L	10	ND		02/22/93
N-Nitrosodi-n-propylamine	ug/L	10	ND		02/22/93
Nitrosodiphenylamine	ug/L	10	ND		02/22/93
.henanthrene	ug/L	10	ND		02/22/93
Pyrene	ug/L	10	ND		02/22/93
1,2,4-Trichlorobenzene	ug/L	10	ND		02/22/93
Hexachlorocyclopentadiene	ug/L	10	ND		02/22/93
N-Nitrosodi-n-methylamine	ug/L	10	ND		02/22/93

9800 Kincey Avenue, Suite 100
Huntersville, NC 28078
TEL: 704-875-9092
FAX: 704-875-9091

An Equal Opportunity Employer

pace INCORPORATED
THE ASSURANCE OF QUALITY

REPORT OF LABORATORY ANALYSIS

Mr. Barry Nelson
Page 9

February 24, 1993
PACE Project Number: 630216502

Client Reference: J.L De Ball-Girmes 121.001

PACE Sample Number:			92 0188675		
Date Collected:			02/12/93		
Date Received:			02/16/93		
Client Sample ID:			MW-7		
Parameter	Units	MDL		METHOD	DATE ANALYZED
ORGANIC ANALYSIS					
VOLATILE ORGANICS-624				624	
Date Analyzed			021893		02/18/93
Benzene	ug/L	5.0	ND		02/18/93
Bromodichloromethane	ug/L	5.0	ND		02/18/93
Bromoform	ug/L	5.0	ND		02/18/93
Bromomethane	ug/L	10	ND		02/18/93
Carbon tetrachloride	ug/L	5.0	ND		02/18/93
Chlorobenzene	ug/L	5.0	ND		02/18/93
Chloroethane	ug/L	10	ND		02/18/93
2-Chloroethylvinyl ether	ug/L	10	ND		02/18/93
Chloroform	ug/L	5.0	ND		02/18/93
loromethane	ug/L	10	ND		02/18/93
Dibromochloromethane	ug/L	5.0	ND		02/18/93
1,2-Dichlorobenzene	ug/L	5.0	ND		02/18/93
1.3-Dichlorobenzene	ug/L	5.0	ND		02/18/93
1,4-Dichlorobenzene	ug/L	5.0	ND		02/18/93
1,1-Dichloroethane	ug/L	5.0	ND		02/18/93
1,2-Dichloroethane	ug/L	5.0	ND		02/18/93
1,1-Dichloroethylene	ug/L	5.0	ND		02/18/93
Total 1,2-dichloroethylene	ug/L	5.0	ND		02/18/93
1,2-Dichloropropane	ug/L	5.0	ND		02/18/93
Cis-1,3-dichloropropene	ug/L	5.0	ND		02/18/93
Trans-1,3-dichloropropene	ug/L	5.0	ND		02/18/93
Ethyl Benzene	ug/L	5.0	ND		02/18/93
Methylene chloride	ug/L	5.0	ND		02/18/93
1,1,2,2-Tetrachloroethane	ug/L	5.0	ND		02/18/93
Tetrachloroethylene	ug/L	5.0	ND		02/18/93
Toluene	ug/L	5.0	ND		02/18/93
1,1,1-Trichloroethane	ug/L	5.0	ND		02/18/93
1,1,2-Trichloroethane	ug/L	5.0	ND		02/18/93
Trichloroethylene	ug/L	5.0	47		02/18/93
Trichlorofluoromethane	ug/L	10	ND		02/18/93

9800 Kincey Avenue, Suite 100
Huntersville, NC 28078
TEL: 704-875-9092
FAX: 704-875-9091

An Equal Opportunity Employer

pace INCORPORATED
THE ASSURANCE OF QUALITY

REPORT OF LABORATORY ANALYSIS

Mr. Barry Nelson
Page 10

February 24, 1993
PACE Project Number: 630216502

Client Reference: J.L De Ball-Girmes 121.001

PACE Sample Number:			92 0188675		
Date Collected:			02/12/93		
Date Received:			02/16/93		
Client Sample ID:			MW-7		
Parameter	Units	MDL		METHOD	DATE ANALYZED
ORGANIC ANALYSIS					
VOLATILE ORGANICS-624				624	
Vinyl Chloride	ug/L	10	ND		02/18/93

9800 Kincey Avenue, Suite 100
Huntersville, NC 28078
TEL: 704-875-9092
FAX: 704-875-9091

An Equal Opportunity Employer

pace INCORPORATED
THE ASSURANCE OF QUALITY

REPORT OF LABORATORY ANALYSIS

Mr. Barry Nelson
Page 11

February 24, 1993
PACE Project Number: 630216502

Client Reference: J.L De Ball-Girmes 121.001

PACE Sample Number:			92 0188683		
Date Collected:			02/12/93		
Date Received:			02/16/93		
Client Sample ID:			MW-8		
Parameter	Units	MDL		METHOD	DATE ANALYZED
ORGANIC ANALYSIS					
VOLATILE ORGANICS-624				624	
Date Analyzed			021893		02/18/93
Benzene	ug/L	5.0	ND		02/18/93
Bromodichloromethane	ug/L	5.0	ND		02/18/93
Bromoform	ug/L	5.0	ND		02/18/93
Bromomethane	ug/L	10	ND		02/18/93
Carbon tetrachloride	ug/L	5.0	ND		02/18/93
Chlorobenzene	ug/L	5.0	ND		02/18/93
Chloroethane	ug/L	10	ND		02/18/93
2-Chloroethylvinyl ether	ug/L	10	ND		02/18/93
Chloroform	ug/L	5.0	ND		02/18/93
Chloromethane	ug/L	10	ND		02/18/93
Dibromochloromethane	ug/L	5.0	ND		02/18/93
1,2-Dichlorobenzene	ug/L	5.0	ND		02/18/93
1,3-Dichlorobenzene	ug/L	5.0	ND		02/18/93
1,4-Dichlorobenzene	ug/L	5.0	ND		02/18/93
1,1-Dichloroethane	ug/L	5.0	ND		02/18/93
1,2-Dichloroethane	ug/L	5.0	ND		02/18/93
1,1-Dichloroethylene	ug/L	5.0	ND		02/18/93
Total 1,2-dichloroethylene	ug/L	5.0	ND		02/18/93
1,2-Dichloropropane	ug/L	5.0	ND		02/18/93
Cis-1,3-dichloropropene	ug/L	5.0	ND		02/18/93
Trans-1,3-dichloropropene	ug/L	5.0	ND		02/18/93
Ethyl Benzene	ug/L	5.0	ND		02/18/93
Methylene chloride	ug/L	5.0	ND		02/18/93
1,1,2,2-Tetrachloroethane	ug/L	5.0	ND		02/18/93
Tetrachloroethylene	ug/L	5.0	ND		02/18/93
Toluene	ug/L	5.0	ND		02/18/93
1,1,1-Trichloroethane	ug/L	5.0	ND		02/18/93
1,1,2-Trichloroethane	ug/L	5.0	ND		02/18/93
Trichloroethylene	ug/L	5.0	ND		02/18/93
Trichlorofluoromethane	ug/L	10	ND		02/18/93

9800 Kincey Avenue, Suite 100
Huntersville, NC 28078
TEL: 704-875-9092
FAX: 704-875-9091

An Equal Opportunity Employer

pace INCORPORATED
THE ASSURANCE OF QUALITY

REPORT OF LABORATORY ANALYSIS

February 24, 1993
PACE Project Number: 630216502

Client Reference: J.L De Ball-Girmes 121.001

PACE Sample Number:			92 0188683		
Date Collected:			02/12/93		
Date Received:			02/16/93		
Client Sample ID:			MW-8		
Parameter	Units	MDL		METHOD	DATE ANALYZED
ORGANIC ANALYSIS					
VOLATILE ORGANICS-624				624	
Vinyl Chloride	ug/L	10	ND		02/18/93

9800 Kincey Avenue, Suite 100
Huntersville, NC 28078
TEL: 704-875-9092
FAX: 704-875-9091

An Equal Opportunity Employer

pace INCORPORATED
THE ASSURANCE OF QUALITY

REPORT OF LABORATORY ANALYSIS

Mr. Barry Nelson
Page 13

February 24, 1993
PACE Project Number: 630216502

Client Reference: J.L De Ball-Girmes 121.001

PACE Sample Number:			92 0188691		
Date Collected:			02/12/93		
Date Received:			02/16/93		
Client Sample ID:			MW-9		
Parameter	Units	MDL		METHOD	DATE ANALYZED
ORGANIC ANALYSIS					
VOLATILE ORGANICS-624				624	
Date Analyzed	ug/L		021993		02/19/93
Benzene	ug/L	5.0	ND		02/19/93
Bromodichloromethane	ug/L	5.0	ND		02/19/93
Bromoform	ug/L	5.0	ND		02/19/93
Bromomethane	ug/L	5.0	ND		02/19/93
Carbon tetrachloride	ug/L	5.0	ND		02/19/93
Chlorobenzene	ug/L	5.0	ND		02/19/93
Chloroethane	ug/L	10	ND		02/19/93
2-Chloroethylvinyl ether	ug/L	10	ND		02/19/93
Chloroform	ug/L	5.0	ND		02/19/93
loromethane	ug/L	10	ND		02/19/93
Dibromochloromethane	ug/L	5.0	ND		02/19/93
1,2-Dichlorobenzene	ug/L	5.0	ND		02/19/93
1.3-Dichlorobenzene	ug/L	5.0	ND		02/19/93
1,4-Dichlorobenzene	ug/L	5.0	ND		02/19/93
1,1-Dichloroethane	ug/L	5.0	ND		02/19/93
1,2-Dichloroethane	ug/L	5.0	ND		02/19/93
1,1-Dichloroethylene	ug/L	5.0	ND		02/19/93
Total 1,2-dichloroethylene	ug/L	5.0	99		02/19/93
1,2-Dichloropropane	ug/L	5.0	ND		02/19/93
Cis-1,3-dichloropropene	ug/L	5.0	ND		02/19/93
Trans-1,3-dichloropropene	ug/L	5.0	ND		02/19/93
Ethyl Benzene	ug/L	5.0	ND		02/19/93
Methylene chloride	ug/L	5.0	ND		02/19/93
1,1,2,2-Tetrachloroethane	ug/L	5.0	ND		02/19/93
Tetrachloroethylene	ug/L	5.0	ND		02/19/93
Toluene	ug/L	5.0	ND		02/19/93
1,1,1-Trichloroethane	ug/L	5.0	ND		02/19/93
1,1,2-Trichloroethane	ug/L	5.0	ND		02/19/93
Trichloroethylene	ug/L	250	4300		02/19/93
Trichlorofluoromethane	ug/L	10	ND		02/19/93

9800 Kincey Avenue, Suite 100
Huntersville, NC 28078
TEL: 704-875-9092
FAX: 704-875-9091

An Equal Opportunity Employer

pace INCORPORATED
THE ASSURANCE OF QUALITY

REPORT OF LABORATORY ANALYSIS

Mr. Barry Nelson
Page 14

February 24, 1993
PACE Project Number: 630216502

Client Reference: J.L De Ball-Girmes 121.001

PACE Sample Number:			92 0188691		
Date Collected:			02/12/93		
Date Received:			02/16/93		
Client Sample ID:			MW-9		
Parameter	Units	MDL		METHOD	DATE ANALYZED
ORGANIC ANALYSIS					
VOLATILE ORGANICS-624				624	
Vinyl Chloride	ug/L	10	ND		02/19/93

9800 Kincey Avenue, Suite 100
Huntersville, NC 28078
TEL: 704-875-9092
FAX: 704-875-9091

An Equal Opportunity Employer

pace INCORPORATED
THE ASSURANCE OF QUALITY

REPORT OF LABORATORY ANALYSIS

Mr. Barry Nelson
Page 15

February 24, 1993
PACE Project Number: 630216502

Client Reference: J.L De Ball-Girmes 121.001

PACE Sample Number:			92 0188705		
Date Collected:			02/12/93		
Date Received:			02/16/93		
Client Sample ID:			MW-10		
Parameter	Units	MDL		METHOD	DATE ANALYZED
ORGANIC ANALYSIS					
VOLATILE ORGANICS-624				624	
Date Analyzed	ug/L		021993		02/19/93
Benzene	ug/L	5.0	ND		02/19/93
Bromodichloromethane	ug/L	5.0	ND		02/19/93
Bromoform	ug/L	5.0	ND		02/19/93
Bromomethane	ug/L	5.0	ND		02/19/93
Carbon tetrachloride	ug/L	5.0	ND		02/19/93
Chlorobenzene	ug/L	5.0	ND		02/19/93
Chloroethane	ug/L	10	ND		02/19/93
2-Chloroethylvinyl ether	ug/L	10	ND		02/19/93
Chloroform	ug/L	5.0	ND		02/19/93
Chloromethane	ug/L	10	ND		02/19/93
Dibromochloromethane	ug/L	5.0	ND		02/19/93
1,2-Dichlorobenzene	ug/L	5.0	ND		02/19/93
1,3-Dichlorobenzene	ug/L	5.0	ND		02/19/93
1,4-Dichlorobenzene	ug/L	5.0	ND		02/19/93
1,1-Dichloroethane	ug/L	5.0	ND		02/19/93
1,2-Dichloroethane	ug/L	5.0	ND		02/19/93
1,1-Dichloroethylene	ug/L	5.0	ND		02/19/93
Total 1,2-dichloroethylene	ug/L	100	1400		02/19/93
1,2-Dichloropropane	ug/L	5.0	ND		02/19/93
Cis-1,3-dichloropropene	ug/L	5.0	ND		02/19/93
Trans-1,3-dichloropropene	ug/L	5.0	ND		02/19/93
Ethyl Benzene	ug/L	5.0	ND		02/19/93
Methylene chloride	ug/L	5.0	ND		02/19/93
1,1,2,2-Tetrachloroethane	ug/L	5.0	ND		02/19/93
Tetrachloroethylene	ug/L	5.0	ND		02/19/93
Toluene	ug/L	5.0	ND		02/19/93
1,1,1-Trichloroethane	ug/L	5.0	ND		02/19/93
1,1,2-Trichloroethane	ug/L	5.0	ND		02/19/93
Trichloroethylene	ug/L	100	240		02/19/93
Trichlorofluoromethane	ug/L	10	ND		02/19/93

9800 Kincey Avenue, Suite 100
Huntersville, NC 28078
TEL: 704-875-9092
FAX: 704-875-9091

An Equal Opportunity Employer

pace INCORPORATED
THE ASSURANCE OF QUALITY

REPORT OF LABORATORY ANALYSIS

Mr. Barry Nelson
Page 16

February 24, 1993
PACE Project Number: 630216502

Client Reference: J.L De Ball-Girmes 121.001

PACE Sample Number:			92 0188705		
Date Collected:			02/12/93		
Date Received:			02/16/93		
Client Sample ID:			MW-10		
Parameter	Units	MDL		METHOD	DATE ANALYZED
ORGANIC ANALYSIS					
VOLATILE ORGANICS-624				624	
Vinyl Chloride	ug/L	10	18		02/19/93

These data have been reviewed and are approved for release.

Margaret S. Harding
Manager, Organic Chemistry

9800 Kincey Avenue, Suite 100
Huntersville, NC 28078
TEL: 704-875-9092
FAX: 704-875-9091

An Equal Opportunity Employer

REPORT OF LABORATORY ANALYSIS

Mr. Barry Nelson
Page 17

FOOTNOTES
for pages 1 through 16

February 24, 1993
PACE Project Number: 630216502

Client Reference: J.L De Ball-Girmes 121.001

MDL Method Detection Limit
ND Not detected at or above the MDL.

9800 Kincey Avenue, Suite 100
Huntersville, NC 28078
TEL: 704-875-9092
FAX: 704-875-9091

An Equal Opportunity Employer

QUALITY CONTROL DATA

February 24, 1993
PACE Project Number: 630216502

Client Reference: J.L De Ball-Girmes 121.001

EXTRACTABLE ORGANICS BY EPA 8270 GC/MS
Batch: 60 19391
Samples: 92 0188640, 92 0188667

METHOD BLANK:

Parameter	Units	MDL	Method Blank
Phenol	ug/L	10	ND
Bis(2-Chloroethyl)ether	ug/L	10	ND
2-Chlorophenol	ug/L	10	ND
1,3-Dichlorobenzene	ug/L	10	ND
1,4-Dichlorobenzene	ug/L	10	ND
Benzyl Alcohol	ug/L	10	ND
1,2-Dichlorobenzene	ug/L	10	ND
2-Methylphenol	ug/L	10	ND
Bis(2-Chloroisopropyl)ether	ug/L	10	ND
4-Methylphenol	ug/L	10	ND
N-Nitrosodi-n-Propylamine	ug/L	10	ND
xachloroethane	ug/L	10	ND
Nitrobenzene	ug/L	10	ND
Isophorone	ug/L	10	ND
2-Nitrophenol	ug/L	10	ND
2,4-Dimethylphenol	ug/L	10	ND
Benzoic Acid	ug/L	50	ND
Bis(2-Chloroethoxy)methane	ug/L	10	ND
2,4-Dichlorophenol	ug/L	10	ND
1,2,4-Trichlorobenzene	ug/L	10	ND
Naphthalene	ug/L	10	ND
4-Chloroaniline	ug/L	10	ND
Hexachlorobutadiene	ug/L	10	ND
Parachlorometacresol	ug/L	10	ND
2-Methylnaphthalene	ug/L	10	ND
Hexachlorocyclopentadiene	ug/L	10	ND
2,4,6-Trichlorophenol	ug/L	10	ND
2,4,5-Trichlorophenol	ug/L	10	ND
2-Chloronaphthalene	ug/L	10	ND
2-Nitroaniline	ug/L	50	ND
Dimethyl Phthalate	ug/L	10	ND
Acenaphthylene	ug/L	10	ND

REPORT OF LABORATORY ANALYSIS

QUALITY CONTROL DATA

February 24, 1993
PACE Project Number: 630216502

Client Reference: J.L De Ball-Girmes 121.001

EXTRACTABLE ORGANICS BY EPA 8270 GC/MS
Batch: 60 19391
Samples: 92 0188640, 92 0188667

METHOD BLANK:

Parameter	Units	MDL	Method Blank
2,6-Dinitrotoluene	ug/L	10	ND
3-Nitroaniline	ug/L	50	ND
Acenaphthene	ug/L	10	ND
2,4-Dinitrophenol	ug/L	50	ND
4-Nitrophenol	ug/L	50	ND
Dibenzofuran	ug/L	10	ND
2,4-Dinitrotoluene	ug/L	10	ND
Diethyl phthalate	ug/L	10	ND
4-Chlorophenyl-phenylether	ug/L	10	ND
Fluorene	ug/L	10	ND
4-Nitroaniline	ug/L	50	ND
4,6-Dinitro-o-cresol	ug/L	50	ND
N-Nitrosodiphenylamine	ug/L	10	ND
4-Bromophenyl phenyl ether	ug/L	10	ND
Hexachlorobenzene	ug/L	10	ND
Pentachlorophenol	ug/L	50	ND
Phenanthrene	ug/L	10	ND
Anthracene	ug/L	10	ND
Di-n-butyl phthalate	ug/L	10	ND
Fluoranthene	ug/L	10	ND
Pyrene	ug/L	10	ND
Butyl benzyl phthalate	ug/L	10	ND
3,3'-Dichlorobenzidine	ug/L	20	ND
Benzo(a)anthracene	ug/L	10	ND
Chrysene	ug/L	10	ND
Bis(2-ethylhexyl)phthalate	ug/L	10	ND
Di-n-octyl phthalate	ug/L	10	ND
Benzo(b)fluoranthene	ug/L	10	ND
Benzo(k)fluoranthene	ug/L	10	ND
Benzo(a)pyrene	ug/L	10	ND
Indeno(1,2,3-cd)pyrene	ug/L	10	ND
Dibenzo(a,h)anthracene	ug/L	10	ND

9800 Kincey Avenue, Suite 100
Huntersville, NC 28078
TEL: 704-875-9092
FAX: 704-875-9091

An Equal Opportunity Employer

REPORT OF LABORATORY ANALYSIS

. Barry Nelson
Page 20

QUALITY CONTROL DATA

February 24, 1993
PACE Project Number: 630216502

Client Reference: J.L De Ball-Girmes 121.001

EXTRACTABLE ORGANICS BY EPA 8270 GC/MS
Batch: 60 19391
Samples: 92 0188640, 92 0188667

METHOD BLANK:

Parameter	Units	MDL	Method Blank
Benzo(g,h,i)perylene	ug/L	10	ND
Nitrobenzene-D5 (Surrogate)	%		68
2-Fluorobiphenyl (Surrogate)	%		61
Terphenyl-D14 (Surrogate)	%		87
Phenol-D6 (Surrogate)	%		63
2-Fluorophenol (Surrogate)	%		64
2,4,6-Tribromophenol (Surrogate)	%		88

SPIKE AND SPIKE DUPLICATE:

rameter	Units	MDL	920174488	Spike	Spike Recv	Spike Dupl Recv	RPD
Phenol	ug/L	10	25	150	57%	65%	13%
2-Chlorophenol	ug/L	10	ND	150	58%	61%	5%
1,4-Dichlorobenzene	ug/L	10	ND	100	66%	69%	4%
N-Nitrosodi-n-Propylamine	ug/L	10	ND	100	92%	101%	9%
1,2,4-Trichlorobenzene	ug/L	10	ND	100	78%	82%	5%
Parachlorometacresol	ug/L	10	ND	150	83%	91%	9%
Acenaphthene	ug/L	10	ND	100	79%	80%	1%
4-Nitrophenol	ug/L	50	ND	150	135%	157%	15%
2,4-Dinitrotoluene	ug/L	10	ND	100	120%	129%	7%
Pentachlorophenol	ug/L	50	ND				
Pyrene	ug/L	10	ND	100	97%	102%	5%

LABORATORY CONTROL SAMPLE:

Parameter	Units	MDL	Reference Value	Recv
Phenol	ug/L	10	150	60%
2-Chlorophenol	ug/L	10	150	61%
1,4-Dichlorobenzene	ug/L	10	100	68%
N-Nitrosodi-n-Propylamine	ug/L	10	100	96%
1,2,4-Trichlorobenzene	ug/L	10	100	79%
Parachlorometacresol	ug/L	10	150	87%

REPORT OF LABORATORY ANALYSIS

. Barry Nelson
rage 21

QUALITY CONTROL DATA

February 24, 1993
PACE Project Number: 630216502

Client Reference: J.L De Ball-Girmes 121.001

EXTRACTABLE ORGANICS BY EPA 8270 GC/MS
Batch: 60 19391
Samples: 92 0188640, 92 0188667

LABORATORY CONTROL SAMPLE:

Parameter	Units	MDL	Reference Value	Recv
Acenaphthene	ug/L	10	100	76%
4-Nitrophenol	ug/L	50	150	107%
2,4-Dinitrotoluene	ug/L	10	100	127%
Pyrene	ug/L	10	100	102%

9800 Kincey Avenue, Suite 100
Huntersville, NC 28078
TEL: 704-875-9092
FAX: 704-875-9091

An Equal Opportunity Employer

REPORT OF LABORATORY ANALYSIS

Mr. Barry Nelson
Page 22

QUALITY CONTROL DATA

February 24, 1993
PACE Project Number: 630216502

Client Reference: J.L De Ball-Girmes 121.001

VOLATILE ORGANICS, EPA METHOD 624
Batch: 60 19386
Samples: 92 0188640, 92 0188659, 92 0188667, 92 0188675, 92 0188683

METHOD BLANK:

Parameter	Units	MDL	Method Blank
Methyl chloride (Chloromethane)	ug/L	10	ND
Methyl bromide (Bromomethane)	ug/L	10	ND
Vinyl Chloride	ug/L	10	ND
Chloroethane	ug/L	10	ND
Methylene Chloride	ug/L	5	ND
1,1-Dichloroethylene	ug/L	5	ND
1,1-Dichloroethane	ug/L	5	ND
1,2-Dichloroethylene (Total)	ug/L	5	ND
Chloroform	ug/L	5	ND
1,2-Dichloroethane	ug/L	5	ND
1,1,1-Trichloroethane	ug/L	5	ND
Carbon Tetrachloride	ug/L	5	ND
Dichlorobromomethane	ug/L	5	ND
1,2-Dichloropropane	ug/L	5	ND
Cis-1,3-Dichloropropene	ug/L	5	ND
Trichloroethylene	ug/L	5	ND
Chlorodibromomethane	ug/L	5	ND
1,1,2-Trichloroethane	ug/L	5	ND
Benzene	ug/L	5	ND
Trans-1,3-Dichloropropene	ug/L	5	ND
Bromoform	ug/L	5	ND
Tetrachloroethylene	ug/L	5	ND
1,1,2,2-Tetrachloroethane	ug/L	5	ND
Toluene	ug/L	5	ND
Chlorobenzene	ug/L	5	ND
Ethylbenzene	ug/L	5	ND
Trichlorofluoromethane	ug/L	5	ND
2-Chloroethylvinyl ether (mixed)	ug/L	5	ND
1,3-Dichlorobenzene	ug/L	5	ND
1,4-Dichlorobenzene	ug/L	5	ND
1,2-Dichlorobenzene	ug/L	5	ND
1,2-Dichloroethane-d4 (Surrogate)	%		86

9800 Kincey Avenue, Suite 100
Huntersville, NC 28078
TEL: 704-875-9092
FAX: 704-875-9091

An Equal Opportunity Employer

. Barry Nelson
Page 23

QUALITY CONTROL DATA

February 24, 1993
PACE Project Number: 630216502

Client Reference: J.L De Ball-Girmes 121.001

VOLATILE ORGANICS, EPA METHOD 624
Batch: 60 19386
Samples: 92 0188640, 92 0188659, 92 0188667, 92 0188675, 92 0188683

METHOD BLANK:

Parameter	Units	MDL	Method Blank
Toluene-d8 (Surrogate)	%		92
4-Bromofluorobenzene (Surrogate)	%		87

SPIKE AND SPIKE DUPLICATE:

Parameter	Units	MDL	600013713	Spike	Spike Recv	Spike Dupl Recv	RPD
1,1-Dichloroethylene	ug/L	5	ND	50.00	121%	111%	8%
Trichloroethylene	ug/L	5	ND	50.00	103%	103%	0%
Benzene	ug/L	5	ND	50.00	83%	90%	8%
Toluene	ug/L	5	ND	50.00	77%	78%	1%
Chlorobenzene	ug/L	5	ND	50.00	84%	87%	3%

LABORATORY CONTROL SAMPLE:

Parameter	Units	MDL	Reference Value	Recv
Methyl chloride (Chloromethane)	ug/L	10	50	134%
Methyl bromide (Bromomethane)	ug/L	10	50	109%
Vinyl Chloride	ug/L	10	50	117%
Chloroethane	ug/L	10	50	109%
Methylene Chloride	ug/L	5	50	81%
Carbon Disulfide	ug/L	5	50	84%
1,1-Dichloroethylene	ug/L	5	50	87%
1,1-Dichloroethane	ug/L	5	50	88%
1,2-Dichloroethylene (Total)	ug/L	5	100	103%
Chloroform	ug/L	5	50	88%
1,2-Dichloroethane	ug/L	5	50	91%
2-Butanone (MEK)	ug/L	5	50	94%
1,1,1-Trichloroethane	ug/L	5	50	91%
Carbon Tetrachloride	ug/L	5	50	96%
Dichlorobromomethane	ug/L	5	50	94%
1,2-Dichloropropane	ug/L	5	50	94%
Cis-1,3-Dichloropropene	ug/L	5	50	83%

Mr. Barry Nelson
Page 24

QUALITY CONTROL DATA

February 24, 1993
PACE Project Number: 630216502

Client Reference: J.L De Ball-Girmes 121.001

VOLATILE ORGANICS, EPA METHOD 624
Batch: 60 19386
Samples: 92 0188640, 92 0188659, 92 0188667, 92 0188675, 92 0188683

LABORATORY CONTROL SAMPLE:

Parameter	Units	MDL	Reference Value	Recv
Trichloroethylene	ug/L	5	50	98%
Chlorodibromomethane	ug/L	5	50	98%
1,1,2-Trichloroethane	ug/L	5	50	102%
Benzene	ug/L	5	50	80%
Trans-1,3-Dichloropropene	ug/L	5	50	56%
Bromoform	ug/L	5	50	97%
4-Methyl-2-Pentanone (MIBK)	ug/L	5	50	94%
2-Hexanone	ug/L	5	50	135%
Tetrachloroethylene	ug/L	5	50	98%
1,1,2,2-Tetrachloroethane	ug/L	5	50	82%
Toluene	ug/L	5	50	75%
Chlorobenzene	ug/L	5	50	84%
Ethylbenzene	ug/L	5	50	77%
Styrene	ug/L	5	50	80%
Xylenes (Total)	ug/L	5	150	76%

9800 Kincey Avenue, Suite 100
Huntersville, NC 28078
TEL: 704-875-9092
FAX: 704-875-9091

An Equal Opportunity Employer

Mr. Barry Nelson
Page 25

QUALITY CONTROL DATA

February 24, 1993
PACE Project Number: 630216502

Client Reference: J.L De Ball-Girmes 121.001

VOLATILE ORGANICS, EPA METHOD 624
Batch: 60 19401
Samples: 92 0188691, 92 0188705

METHOD BLANK:

Parameter	Units	MDL	Method Blank
Methyl chloride (Chloromethane)	ug/L	10	ND
Methyl bromide (Bromomethane)	ug/L	10	ND
Vinyl Chloride	ug/L	10	ND
Chloroethane	ug/L	10	ND
Methylene Chloride	ug/L	5	ND
1,1-Dichloroethylene	ug/L	5	ND
1,1-Dichloroethane	ug/L	5	ND
1,2-Dichloroethylene (Total)	ug/L	5	ND
Chloroform	ug/L	5	ND
1,2-Dichloroethane	ug/L	5	ND
1,1,1-Trichloroethane	ug/L	5	ND
Carbon Tetrachloride	ug/L	5	ND
Dichlorobromomethane	ug/L	5	ND
1,2-Dichloropropane	ug/L	5	ND
Cis-1,3-Dichloropropene	ug/L	5	ND
Trichloroethylene	ug/L	5	ND
Chlorodibromomethane	ug/L	5	ND
1,1,2-Trichloroethane	ug/L	5	ND
Benzene	ug/L	5	ND
Trans-1,3-Dichloropropene	ug/L	5	ND
Bromoform	ug/L	5	ND
Tetrachloroethylene	ug/L	5	ND
1,1,2,2-Tetrachloroethane	ug/L	5	ND
Toluene	ug/L	5	ND
Chlorobenzene	ug/L	5	ND
Ethylbenzene	ug/L	5	ND
Trichlorofluoromethane	ug/L	5	ND
2-Chloroethylvinyl ether (mixed)	ug/L	5	ND
1,3-Dichlorobenzene	ug/L	5	ND
1,4-Dichlorobenzene	ug/L	5	ND
1,2-Dichlorobenzene	ug/L	5	ND
1,2-Dichloroethane-d4 (Surrogate)	%		96

pace INCORPORATED
THE ASSURANCE OF QUALITY

REPORT OF LABORATORY ANALYSIS

Mr. Barry Nelson
Page 26

QUALITY CONTROL DATA

February 24, 1993
PACE Project Number: 630216502

Client Reference: J.L De Ball-Girmes 121.001

VOLATILE ORGANICS, EPA METHOD 624
Batch: 60 19401
Samples: 92 0188691, 92 0188705

METHOD BLANK:

Parameter	Units	MDL	Method Blank
Toluene-d8 (Surrogate)	%		103
4-Bromofluorobenzene (Surrogate)	%		96

SPIKE AND SPIKE DUPLICATE:

Parameter	Units	MDL	600013713	Spike	Spike Recv	Spike Dupl Recv	RPD
1,1-Dichloroethylene	ug/L	5	ND	50.00	121%	111%	8%
Trichloroethylene	ug/L	5	ND	50.00	103%	103%	0%
Benzene	ug/L	5	ND	50.00	83%	90%	8%
Toluene	ug/L	5	ND	50.00	77%	78%	1%
Chlorobenzene	ug/L	5	ND	50.00	84%	87%	3%

LABORATORY CONTROL SAMPLE:

Parameter	Units	MDL	Reference Value	Recv
Methyl chloride (Chloromethane)	ug/L	10	50	134%
Methyl bromide (Bromomethane)	ug/L	10	50	109%
Vinyl Chloride	ug/L	10	50	117%
Chloroethane	ug/L	10	50	109%
Methylene Chloride	ug/L	5	50	81%
Carbon Disulfide	ug/L	5	50	84%
1,1-Dichloroethylene	ug/L	5	50	87%
1,1-Dichloroethane	ug/L	5	50	88%
1,2-Dichloroethylene (Total)	ug/L	5	100	103%
Chloroform	ug/L	5	50	88%
1,2-Dichloroethane	ug/L	5	50	91%
2-Butanone (MEK)	ug/L	5	50	94%
1,1,1-Trichloroethane	ug/L	5	50	91%
Carbon Tetrachloride	ug/L	5	50	96%
Dichlorobromomethane	ug/L	5	50	94%
1,2-Dichloropropane	ug/L	5	50	94%
Cis-1,3-Dichloropropene	ug/L	5	50	83%

9800 Kincey Avenue, Suite 100
Huntersville, NC 28078
TEL: 704-875-9092
FAX: 704-875-9091

An Equal Opportunity Employer

REPORT OF LABORATORY ANALYSIS

Mr. Barry Nelson
Page 27

QUALITY CONTROL DATA

February 24, 1993
PACE Project Number: 630216502

Client Reference: J.L De Ball-Girmes 121.001

VOLATILE ORGANICS, EPA METHOD 624
Batch: 60 19401
Samples: 92 0188691, 92 0188705

LABORATORY CONTROL SAMPLE:

Parameter	Units	MDL	Reference Value	Recv
Trichloroethylene	ug/L	5	50	98%
Chlorodibromomethane	ug/L	5	50	98%
1,1,2-Trichloroethane	ug/L	5	50	102%
Benzene	ug/L	5	50	80%
Trans-1,3-Dichloropropene	ug/L	5	50	56%
Bromoform	ug/L	5	50	97%
4-Methyl-2-Pentanone (MIBK)	ug/L	5	50	94%
2-Hexanone	ug/L	5	50	135%
Tetrachloroethylene	ug/L	5	50	98%
1,1,2,2-Tetrachloroethane	ug/L	5	50	82%
Toluene	ug/L	5	50	75%
Chlorobenzene	ug/L	5	50	84%
Ethylbenzene	ug/L	5	50	77%
Styrene	ug/L	5	50	80%
Xylenes (Total)	ug/L	5	150	76%

9800 Kincey Avenue, Suite 100
Huntersville, NC 28078
TEL: 704-875-9092
FAX: 704-875-9091

An Equal Opportunity Employer

. Barry Nelson
.age 28

FOOTNOTES
for pages 18 through 27

February 24, 1993
PACE Project Number: 630216502

Client Reference: J.L De Ball-Girmes 121.001

MDL	Method Detection Limit
ND	Not detected at or above the MDL.
RPD	Relative Percent Difference

9800 Kincey Avenue, Suite 100
Huntersville, NC 28078
TEL: 704-875-9092
FAX: 704-875-9091

An Equal Opportunity Employer

630 . 502

Sheet 1 of 1

BAIN, PALMER & ASSOCIATES, INC.
environmental consultants

(919) 272-9713 2641-G Randleman Rd. Greensboro, NC 27406

CHAIN OF CUSTODY RECORD

Sample No.	Description/Location	Date	Time	Grab	Comp	No. of Containers	Preservative	MATRIX soil	MATRIX water	ANALYSES REQUESTED 624	Base Neutrals 625							
mw-1	J.L. De Ball-Girmes	2-12	2:15p			4-40ml 1-litre	Ice		✓	✓	✓							18864
mw-2	" "	2-12	2:30p			4-40ml	Ice		✓	✓								18865
mw-6	" "	2-12	3:00p			4-40ml 1-litre	Ice		✓	✓	✓							18866
mw-7	" "	2-12	1 pm			4-40ml	Ice		✓	✓								18867
mw-8	" "	2-12	1:15p			4-40ml	Ice		✓	✓								18868
mw-9	" "	2-12	1:30p			4-40ml	Ice		✓	✓								18869
mw-10	" "	2-12	1:45p			4-40ml	Ice		✓	✓								18870

SPECIAL INSTRUCTIONS:

* Preliminary Results Due Friday Feb. 19
Call Barry Nelson or Ken Vanhoy if Ques. Problems.

FIELD OBSERVATIONS: No odors detected on water samples

Items/Reason	Relinquished By	Received By	Date	Time
mw 1, 2, 6, 7, 8 9 + 10	Ken Vanhoy	Fed Ex	2/15	7:00

Items/Reason	Relinquished By	Received By	Date	Time
		Jennifer Carick	2/15	

PROJECT QUOTE NO. -

PROJECT RUSH NO. -

PROJECT MANAGER Barry Nelson

PROJECT NAME J.L. De Ball-Girmes

PROJECT NUMBER 121.001

SAMPLER(S) Ken Vanhoy

APPENDIX F

SUMMARY OF PHASE II SOIL AND GROUNDWATER RESULTS (SM&E) AND SITE SENSITIVITY EVALUATION

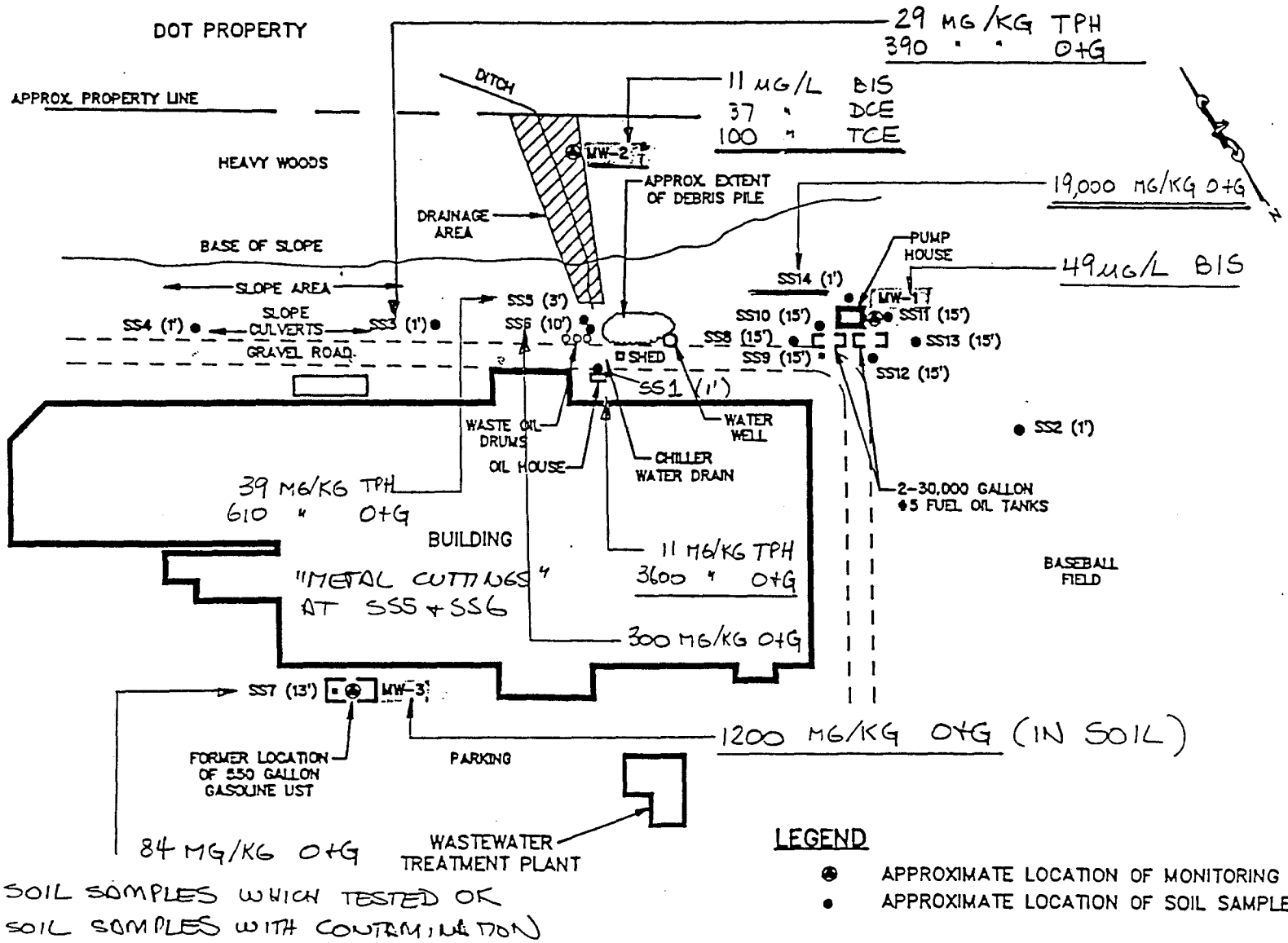

JOB NO.:	1414-92-186
DATE:	12-29-92
SCALE:	0 FEET 150
CAD FILE:	1492186.DWG

S&ME

TITLE: FIGURE 2
SITE PLAN

GIRMES AMERICA, INC.
ASHEVILLE, NORTH CAROLINA

TABLE 1
LABORATORY RESULTS
J. L. DE BALL - GIRMES FACILITY
ASHEVILLE, NORTH CAROLINA
S&ME PROJECT NO. 1414-92-186

Sample Number	ANALYTICAL PARAMETERS				
	TPH (mg/kg)	O&G (mg/kg)	BIS(2-Ethylhexyl) Phthalate (ug/L)	1,2-Dichloro-ethene (ug/L)	Trichloroethene (ug/L)
SS-1 1'	11	3,600	NA	NA	NA
SS-2 1'	BQL	BQL	NA	NA	NA
SS-3 1'	29	390	NA	NA	NA
SS-4 1'	BQL	BQL	NA	NA	NA
SS-5 3'	39	610	NA	NA	NA
SS-6 10'	BQL	300	NA	NA	NA
SS-7 13'	BQL	84	NA	NA	NA
SS-8 15'	NA	BQL	NA	NA	NA
SS-9 15'	NA	BQL	NA	NA	NA
SS-10 15'	NA	BQL	NA	NA	NA
SS-11 15'	NA	BQL	NA	NA	NA
SS-12 15'	NA	BQL	NA	NA	NA
SS-13 15'	NA	BQL	NA	NA	NA
SS-14 1'	NA	19,000	NA	NA	NA
MW-1	BQL	BQL	49	BQL	BQL
MW-2	BQL	BQL	11	37	100
MW-3 5'	BQL	1,200	NA	NA	NA

mg/kg milligrams/kilogram
ug/L micrograms/liter
O&G Oil and Grease

NA Not Analyzed
BQL Below Quantitation Limit
TPH Total Petroleum Hydrocarbons

Table 1

Site Sensitivity Evaluation (SSE)

Site Characteristics Evaluation (Step 1)

Characteristic	Condition	Rating	
Grain Size*	Gravel Sand Silt Clay	150 100 50 0	50
Are relict structures, sedimentary structures, and/or textures present in the zone of contamination and underlying "soils".	Present and intersecting the water table. Present but not intersecting the water table. None present.	10 5 0	0
Distance from location of deepest contaminated soil** to water table.	5 - 10 feet >10 - 40 feet >40 feet	20 10 0	0
Is the top of bedrock or transmissive indurated sediments located above the water table?	Yes No	20 0	20
Artificial conduits present within the zone of contamination.	Present and intersecting the water table. Present but not intersecting the water table. Not present.	10 5 0	5

Total Site Characteristics Score: 75

* Predominant grain size based on Unified Soil Classification System or U.S. Dept. of Agriculture's Soil Classification Method.

** (>10 ppm TPH by Method 5030; >40 ppm TPH by Method 3550; >250 ppm O&G by Method 9071)

Table 2

Site Sensitivity Evaluation (SSE)

Initial Cleanup Level (Step 2) | Final Cleanup Level (Step 3)

Low Boiling Point Hydrocarbons

Total Site Characteristics Score	Initial Cleanup Level TPFH (ppm) EPA Method 5030
>150	≤10
121-150	20
91-120	40
61-90	60
31-60	80
0-30	100

Select Site Category* →

				Final Cleanup Level
Category A & B (Multiply initial cleanup level by 1)	1	x ____	= ____	ppm
Category C & D (Multiply initial cleanup level by 2)	2	x 100	= 120	ppm
Category E (Multiply initial cleanup level by 3)	3	x ____	= ____	ppm

Medium Boiling Point Hydrocarbons

Total Site Characteristics Score	Initial Cleanup Level TPFH (ppm) EPA Method 3550
>150	≤40
121-150	80
91-120	160
61-90	240
31-60	320
0-30	400

Select Site Category* →

				Final Cleanup Level
Category A & B (Multiply initial cleanup level by 1)	1	x ____	= ____	ppm
Category C & D (Multiply initial cleanup level by 2)	2	x 240	= 480	ppm
Category E (Multiply initial cleanup level by 3)	3	x ____	= ____	ppm

Oil & Grease (O&G)

Total Site Characteristics Score	Initial Cleanup Level O&G (ppm) EPA Method 9071
>150	≤250
121-150	400
91-120	550
61-90	700
31-60	850
0-30	1000

Select Site Category* →

				Final Cleanup Level
Category A & B (Multiply initial cleanup level by 1)	1	x ____	= ____	ppm
Category C & D (Multiply initial cleanup level by 2)	2	x 700	= 1400	ppm
Category E (Multiply initial cleanup level by 3)	3	x ____	= ____	ppm

* See Site Category Descriptions

APPENDIX G

SOIL LABORATORY RESULTS

pace INCORPORATED
THE ASSURANCE OF QUALITY

REPORT OF LABORATORY ANALYSIS

Bain, Palmer & Assoc., Inc.
2641 G Randleman Rd.
Greensboro, NC 27406

March 01, 1993
PACE Project Number: 630216500

Attn: Mr. Barry Nelson

Client Reference: J.L. De Bal Girmes 121.001

PACE Sample Number:			92 0188560		
Date Collected:			02/11/93		
Date Received:			02/16/93		
			B-1		
Parameter	Units	MDL	4'	METHOD	DATE ANALYZED
INORGANIC ANALYSIS					
INDIVIDUAL PARAMETERS					
Oils & Grease by Soxhlet Extraction	mg/kg	10	1240	SW846-9071	02/24/93

9800 Kincey Avenue, Suite 100
Huntersville, NC 28078
TEL: 704-875-9092
FAX: 704-875-9091

An Equal Opportunity Employer

pace INCORPORATED
THE ASSURANCE OF QUALITY

REPORT OF LABORATORY ANALYSIS

Mr. Barry Nelson
Page 2

March 01, 1993
PACE Project Number: 630216500

Client Reference: J.L. De Bal Girmes 121.001

PACE Sample Number:			92 0188578		
Date Collected:			02/11/93		
Date Received:			02/16/93		
Client Sample ID:			B-2		
Parameter	Units	MDL	4'	METHOD	DATE ANALYZED
INORGANIC ANALYSIS					
INDIVIDUAL PARAMETERS					
Oils & Grease by Soxhlet Extraction	mg/kg	10	28300	SW846-9071	02/24/93

9800 Kincey Avenue, Suite 100
Huntersville, NC 28078
TEL: 704-875-9092
FAX: 704-875-9091

An Equal Opportunity Employer

pace INCORPORATED
THE ASSURANCE OF QUALITY

REPORT OF LABORATORY ANALYSIS

Mr. Barry Nelson
Page 8

March 01, 1993
PACE Project Number: 630216500

Client Reference: J.L. De Bal Girmes 121.001

PACE Sample Number:			92 0188594		
Date Collected:			02/15/93		
Date Received:			02/16/93		
Client Sample ID:			B-3		
Parameter	Units	MDL	5.5-6'	METHOD	DATE ANALYZED
INORGANIC ANALYSIS					
INDIVIDUAL PARAMETERS					
Oils & Grease by Soxhlet Extraction	mg/kg	10	190	SW846-9071	02/24/93

9800 Kincey Avenue, Suite 100
Huntersville, NC 28078
TEL: 704-875-9092
FAX: 704-875-9091

An Equal Opportunity Employer

pace INCORPORATED
THE ASSURANCE OF QUALITY

REPORT OF LABORATORY ANALYSIS

Mr. Barry Nelson
Page 9

March 01, 1993
PACE Project Number: 630216500

Client Reference: J.L. De Bal Girmes 121.001

PACE Sample Number:			92 0188608		
Date Collected:			02/15/93		
Date Received:			02/16/93		
Client Sample ID:			B-4		
Parameter	Units	MDL	5.5-6'	METHOD	DATE ANALYZED
INORGANIC ANALYSIS					
INDIVIDUAL PARAMETERS					
Oils & Grease by Soxhlet Extraction	mg/kg	10	70	SW846-9071	02/24/93

9800 Kincey Avenue, Suite 100
Huntersville, NC 28078
TEL: 704-875-9092
FAX: 704-875-9091

An Equal Opportunity Employer

pace INCORPORATED
THE ASSURANCE OF QUALITY

REPORT OF LABORATORY ANALYSIS

Mr. Barry Nelson
Page 10

March 01, 1993
PACE Project Number: 630216500

Client Reference: J.L. De Bal Girmes 121.001

PACE Sample Number:			92 0188616		
Date Collected:			02/15/93		
Date Received:			02/16/93		
Client Sample ID:			B-5		
Parameter	Units	MDL	5.5-6'	METHOD	DATE ANALYZED
INORGANIC ANALYSIS					
INDIVIDUAL PARAMETERS					
Oils & Grease by Soxhlet Extraction	mg/kg	10	160	SW846-9071	02/24/93

9800 Kincey Avenue, Suite 100
Huntersville, NC 28078
TEL: 704-875-8002
FAX: 704-875-9091

An Equal Opportunity Employer

pace INCORPORATED
THE ASSURANCE OF QUALITY

REPORT OF LABORATORY ANALYSIS

Mr. Barry Nelson
Page 11

March 01, 1993
PACE Project Number: 630216500

Client Reference: J.L. De Bal Girmes 121.001

PACE Sample Number:			92 0188624		
Date Collected:			02/15/93		
Date Received:			02/16/93		
Client Sample ID:			SW-1		
Parameter	Units	MDL	3.5-4'	METHOD	DATE ANALYZED
INORGANIC ANALYSIS					
INDIVIDUAL PARAMETERS					
Oils & Grease by Soxhlet Extraction	mg/kg	10	2100	SW846-9071	02/24/93

9800 Kincey Avenue, Suite 100
Huntersville, NC 28078
TEL: 704-875-9082
FAX: 704-875-9091

An Equal Opportunity Employer

pace INCORPORATED
THE ASSURANCE OF QUALITY

REPORT OF LABORATORY ANALYSIS

Mr. Barry Nelson
Page 12

March 01, 1993
PACE Project Number: 630216500

Client Reference: J.L. De Bal Girmes 121.001

PACE Sample Number:			92 0188632		
Date Collected:			02/15/93		
Date Received:			02/16/93		
Client Sample ID:			SW-2		
Parameter	Units	MDL	3.5-4'	METHOD	DATE ANALYZED
INORGANIC ANALYSIS					
INDIVIDUAL PARAMETERS					
Oils & Grease by Soxhlet Extraction	mg/kg	10	250	SW846-9071	02/24/93

These data have been reviewed and are approved for release.

Charles M. Cabaniss
Manager, Inorganic Chemistry

Margaret S. Harding
Manager, Organic Chemistry

BAIN, PALMER & ASSOCIATES, INC.
environmental consultants

(919) 272-9713 2641-G Randleman Rd. Greensboro, NC 27406

CHAIN OF CUSTODY RECORD

Sheet 1 of 1

Sample No.	Description/Location	Date	Time	Grab	Comp	No. of Containers	Preservative	MATRIX soil	MATRIX water	ANALYSES REQUESTED 9071	8080	8240	8270					
B-1, 4ft	J.L. De Ball-Girmes	2-11	4pm	✓		1	Ice	✓		✓								18856.0
B-2, 4ft	" "	2-11	4pm	✓		1	Ice	✓		✓								18857.8
Stockpile	" "	2-15	6:30p		✓	3	Ice			✓	✓	✓	✓					18858.6
B-3 5.5-6'	" "	2-15	5:30p	✓		1	"			✓								18859.4
B-4 5.5-6	" "	2-15	5:35p	✓		1	"			✓								18860.8
B-5 5-5.5'	" "	2-15	5:45p	✓		1	"			✓								18861.6
SW-1 3.5-4'	" "	2-15	5:55	✓		1	"			✓								18862.4
SW-2 3.5-4'	" "	2-15	6:05	✓		1	"			✓								18863.2

SPECIAL INSTRUCTIONS:
Fax Preliminary Results ASAP
Call Barry Nelson or Ken Vanhoy for Ques / Problems.

FIELD OBSERVATIONS: Oil & Grease odors noted in soil samples

Items/Reason	Relinquished By	Received By	Date	Time
B-1 to B-5 SW1, SW2, stockpile	Ken Vanhoy	Fed Ex	2-15	7:00
		Jennifer Carter	2-16	1:00

Items/Reason	Relinquished By	Received By	Date	Time

PROJECT QUOTE NO. -

PROJECT RUSH NO. -

PROJECT MANAGER Barry Nelson

PROJECT NAME J.L. De Ball Girmes

PROJECT NUMBER 121.001

SAMPLER(S) Ken Vanhoy

State of North Carolina
Department of Environment, Health, and Natural Resources

Asheville Regional Office

James B. Hunt, Jr., Governor
Jonathan B. Howes, Secretary

DIVISION OF ENVIRONMENTAL MANAGEMENT

Ann B. Orr
Regional Manager

April 21, 1993

CERTIFIED MAIL
RETURN RECEIPT REQUESTED

P 411 632 934

Mr. Allen G. Belenson
SKF USA, Incorporated
1100 First Avenue
King of Prussia, Pennsylvania 19406

Dear Mr. Belenson:

Subject: Notice of Violation for:
1. Oil Pollution and Hazardous Substances Control Act, N.C. General Statutes 143-215.75 et seq. and;
2. Groundwater Classifications and Standards, Title 15A, N.C. Administrative Code, Subchapter 2L.

The Former SKF, Incorporated Plant
Old Highway 74 East, Asheville
Buncombe County, North Carolina

Based upon analytical data from groundwater monitoring at the subject site and sworn statements from former SKF, Incorporated employees, the Division of Environmental Management (the Division) has reason to believe that you are responsible for activities resulting in violations of North Carolina law. This letter is a standard notification to such a violation under North Carolina law.

Chapter 143, North Carolina General Statutes, authorize and directs the Environmental Management Commission and the North Carolina Department of Environment, Health, and Natural Resources (DEHNR) to protect and preserve the water and air resources of the State. The Division has the delegated authority to enforce adopted pollution control rules and regulations.

Under G.S. 143-215.83(a), the unlawful discharge of oil or other hazardous substances into or upon any water or lands within this State is prohibited. The release of varsol and trichloroethylene at the subject site establishes a violation of G.S. 143-215.83(a) of the Oil Pollution and Hazardous Substances Control Act.

The presence of trichloroethylene; 1,2 dichloroethylene; and vinyl chloride in the groundwater establishes a violation of NCAC Title 15A, Subchapter 2L, Classifications and Water Quality Standards Applicable to the Groundwaters of North Carolina.

As described in G.S. 143-215.84(a), any person having control over oil or other hazardous substances unlawfully discharged into or upon any water or lands within this State shall immediately undertake to collect and remove the discharge and to restore the area affected by the discharge as nearly as may be to the condition existing prior to the discharge. If it is not feasible to collect and remove the discharge, the person responsible shall take all practicable actions to contain, treat, and disperse the discharge; but no chemicals or other dispersants or treatment material which will be detrimental to the environment or natural resources shall be used for such purposes unless they shall have been previously approved by the Environmental Management Commission.

Upon any violations of established deadlines, no further notice may be sent and this office may immediately request that enforcement measures be commenced. Therefore, it is important that all deadlines be met, or an extension of time be requested for good cause. Failure to respond within the times specified may result in the recommendation for one or more of the following enforcement actions:

1. Assessment of a civil penalty assessment under authority of G.S. 143-215.88A of not more than $5,000 for each violation of the Oil Pollution and Hazardous Substances Control Act;

2. Assessment of a civil penalty assessment under authority of G.S. 143-215.6A of not more than $10,000 per day if any action or failure to act is continuous; issuance of a special order against you under the authority of G.S. 143-215.2; or a request to the Attorney General to institute an action for injunctive relief for violations of the North Carolina Groundwater Standards;

3. Criminal action, including penalty assessments may be commenced against any person who knowingly and willfully violates any groundwater standard, cleanup requirement or UST technical requirement.

Within two weeks of the receipt of this notice, you are to submit to this office a written response as to your intentions for conducting a comprehensive site assessment (CSA Guidelines enclosed). The CSA shall be completed, and a report provided to the office by December 31, 1993.

Your response should be directed to Kay Dechant at the following address: NC DEHNR, DEM, Groundwater Section, 59 Woodfin Place, Asheville, North Carolina 28801. If you have any questions, please feel free to call Kay Dechant at (704) 251-6208.

Sincerely,

Roy M. Davis
Regional Supervisor

RMD/LKD/gc

Enclosure

cc: Paul R. Flay
Robert Alan Cohen
Arthur Mouberry
Burrie Boshoff
Buncombe County Health Department

6/11/92

Comprehensive Site Assessment (CSA) Report Guidelines

CSA Goal:

To sufficiently characterize the extent of soil and groundwater contamination such that a corrective action plan can be developed

Trigger mechanisms for CSA requirement:

- substances exceeding the 15A NCAC 2L groundwater standards
- free product on the water table
- contaminated soil in contact with groundwater
- requested by Division of Environmental Management

Minimum elements of CSA report:

1. Table of Contents (please number all pages of text)
2. Site History and Source Characterization
   - history of property ownership and usage (e.g. UST owners and operators, operating practices at site, list of chemicals used at the facility, etc.)
   - summary of previous release information or known contamination including dates, sources, contaminants and quantities
   - summary of previous environmental investigations
   - release scenario and/or means of contaminant discovery
   - summary of initial assessments
   - summary of corrective actions to date
   - site map shown on segment of 7 1/2-minute topographic map or county highway map
   - base map showing location of all known and potential contaminant sources, property lines, relevant physical features (e.g. buildings, roads, structures, on-site wastewater treatment plants, etc.), scale, north arrow
   - base or site map showing potential off-site contaminant sources

3. Potential Receptors and Migration Pathways

   - map showing location of all water supply wells, surface water intakes for public water supply and property owners within 1500 feet of the contamination

   - table showing name and address from tax records of property owners adjacent to contamination site

   - subsurface utilities, structures and underground lines superimposed on base map

   - discussion of proximity and availability of municipal water lines

   - designation on base map of structures potentially at risk from free product and/or vapors

   - direction of surface drainage superimposed on base map

4. Soils Investigation

   - soil boring locations superimposed on base map

   - delineation on base map showing approximate horizontal extent of areas containing contaminants in the unsaturated zone at concentrations above the action level established for soil remediation

   - minimum of two cross sections through the unsaturated zone preferably intersecting at right angles and extending across the site exhibiting the subsurface profile and the approximate vertical extent of the contamination as determined by the soil borings

   - table listing field screening and laboratory results (Note: No composite samples), units of measure, date of sample collection, sample depth and sample identification referencing sample points shown on base map

5. Groundwater Investigation

   - location of monitor and recovery wells superimposed on base map

- discussion of monitor well locations which includes pre-installation screening methods used, number of wells, and construction of wells in terms of the nature of the contaminants and the aquifer contaminated (i.e. floaters vs. sinkers, placement of the screened interval, contaminated groundwater in saprolite vs. bedrock, upgradient vs. downgradient wells, etc.)

- table showing static water level measurements referenced to a common datum for all monitor wells to include depth to static water level, relative elevations of points from which depth is measured, relative static water level, date of measurement, and reference to wells shown on base map

- water table contour map and flow lines superimposed on the base map which exhibit direction(s) of groundwater flow with static water level measurements used in the flow net construction printed next to the well locations

- table of analytical results of samples collected from water supply wells at risk of becoming contaminated or from the influent and effluent from point-of-entry filter systems including date(s) of sample collection, units of measure, and reference to supply well(s) shown on site or base map

- table of analytical results for all monitor wells including comparison to 15A NCAC 2L standards, date(s) collected, units of measure, and reference to monitor well shown on base map

- free product map superimposed on the base map showing the extent of free product, the thickness, and date measured

- isoconcentration map superimposed on the base map showing at a minimum the complete horizontal extent of the most widespread contaminant and the contaminant present at the most highly elevated levels (Note: Ring of wells with contaminant levels near or below the 2L groundwater standards must be installed and sampled to complete this map.)

- minimum of two aquifer cross sections intersecting at approximate right angles and extending across the contamination site exhibiting major hydrogeologic units (e.g. gravel, sand, fill, bedrock, etc.) as determined by the boring logs, a vertical and horizontal scale, static water level measurements, date measured, screened interval in monitor wells, and contaminant level at sampling points (Note: A minimum of one deeper well with contaminant levels near or below 2L groundwater standards must be installed and sampled to complete the cross sections.)

- discussion of plume characteristics and significant features or mechanisms which could affect local groundwater flow patterns and plume migration

6. Recommendations

   - discussion of preliminary corrective action to be evaluated for the development of the corrective action plan

7. References

   - interviews

   - file reviews

   - resource material cited

8. Appendices

   - standard operating procedures used at site for sampling, equipment decontamination, well construction, etc.

   - boring logs and soil descriptions

   - well construction records

   - chain-of-custody forms

   - laboratory reports for all samples

   - list of permits received, permitting agency, permit number and date issued

   - other documentation (e.g. tank tightness results)