003_Navy_Clean_HPDTA_GBCCover.indd

Final

Remedial Investigation Report
Towers Road Disposal Areas

Harvey Point Defense Testing Activity
Hertford, North Carolina

Prepared for

Department of the Navy
Naval Facilities Engineering Command
Mid-Atlantic

April 2016

Final

Remedial Investigation Report
Towers Road Disposal Areas

Harvey Point Defense Testing Activity
Hertford, North Carolina

Contract Task Order 0020

April 2016

Prepared for

Department of the Navy
Naval Facilities Engineering Command
Mid-Atlantic

Under the

Navy Multimedia Contract
N62470-10-D-3009

Prepared by

CH2M HILL, Inc.
14120 Ballantyne Corporate Place, Suite 200
Charlotte, North Carolina
NC Engineering License #F-0699

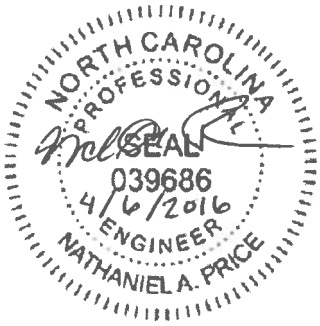

REC PROGRAM DOCUMENT CERTIFICATION FORM - PAGE 1 OF 2
IHSB SITE NAME Towers Road Disposal Areas, Site ID NONCD0002893
DATE & NAME OF DOCUMENT April 2016 Remedial Investigation Report
TYPE OF SUBMITTAL (circle all that apply): Report, Work plan, Work Phase Comp. Statement, Schedule Change

REMEDIATING PARTY DOCUMENT CERTIFICATION STATEMENT (.0306(B)(2))

"I certify under penalty of law that I have personally examined and am familiar with the information contained in this submittal, including any and all documents accompanying this certification, and that, based on my inquiry of those individuals immediately responsible for obtaining the information, the material and information contained herein is, to the best of my knowledge and belief, true, accurate and complete. I am aware that there are significant penalties for willfully submitting false, inaccurate or incomplete information."

Harvey Point Defense Testing Activity
Name of Remediating Party

Brian Lee
Signature of Remediating Party

4/6/2016
Date

NOTARIZATION

North Carolina (Enter State)

Perquimans **COUNTY**

I, Deborah Lyman, a Notary Public of said County and State, do hereby certify that Brian Lee did personally appear and sign before me this day, produced proper identification in the form of Drivers License, was duly sworn or affirmed, and declared that, to the best of his or her knowledge and belief, after thorough investigation, the information contained in the above certification is true and accurate, and he or she then signed this Certification in my presence.

WITNESS my hand and official seal this 6 day of April, 2016.

Deborah O. Lyman
Notary Public (signature)

(OFFICIAL SEAL)

DEBORAH O LYMAN NOTARY PUBLIC PERQUIMANS COUNTY, NC MY COMMISSION EXPIRES 24 July 2020

My commission expires: 24 July 2020.

Document Certification Form No. DC - I
(Revised 8/11)

REC PROGRAM DOCUMENT CERTIFICATION FORM - PAGE 2 OF 2
IHSB SITE NAME Towers Road Disposal Areas, Site ID NONCD0002893
DATE & NAME OF DOCUMENT April 2016 Remedial Investigation Report
TYPE OF SUBMITTAL (circle all that apply): Report, Work plan, Work Phase Comp. Statement, Schedule Change

REGISTERED SITE MANAGER CERTIFICATION OF SIGNATURES

As the Registered Environmental Consultant for the Site for which this filing is made, I certify that the signatures included herewith are genuine and authentic original handwritten signatures and/or true, accurate, and complete copies of the genuine and authentic original handwritten signatures of the persons who purport to sign for this filing. I further certify that I have collected through reliable means the originals and/or copies of said signatures from the persons authorized to sign for this filing who, in fact, signed the originals thereof. Those persons and I understand and agree that any copies of signatures have the same legally binding effect as original handwritten signatures, and I certify that any person for whom I am submitting a copy of their signature has provided me with their express consent to submit said copy. Additionally, I certify that I am authorized to attest to the genuineness and authenticity of the signatures, both originals and any copies, being submitted herewith and that by signing below, I do in fact attest to the genuineness and authenticity of all the signatures, both originals and copies, being submitted for this filing.

Kim Henderson
Name of Registered Site Manager

Signature of Registered Site Manager

4·6·16
Date

REGISTERED SITE MANAGER DOCUMENT CERTIFICATION STATEMENT (.0306(b)(1))

"I certify under penalty of law that I am personally familiar with the information contained in this submittal, including any and all supporting documents accompanying this certification, and that the material and information contained herein is, to the best of my knowledge and belief, true, accurate and complete and complies with the Inactive Hazardous Sites Response Act N.C.G.S. 130A-310, et seq, and the remedial action program Rules 15A NCAC 13C .0300. I am aware that there are significant penalties for willfully submitting false, inaccurate or incomplete information."

Kim Henderson
Name of Registered Site Manager

Signature of Registered Site Manager

4·6·16
Date

NOTARIZATION

Virginia (Enter State)

Virginia Beach COUNTY

I, Rebecca Singleton, a Notary Public of said County and State, do hereby certify that Kim Henderson did personally appear and sign before me this day, produced proper identification in the form of Drivers License, was duly sworn or affirmed, and declared that, he or she is the duly authorized environmental consultant of the remediating party of the property referenced above and that, to the best of his or her knowledge and belief, after thorough investigation, the information contained in the above certifications is true and accurate, and he or she then signed these Certifications in my presence.

WITNESS my hand and official seal this 6th day of April, 2016

(OFFICIAL SEAL)

Notary Public (signature)

My commission expires: 12/31/16

REBECCA S SINGLETON NOTARY PUBLIC MY COMMISSION NUMBER 180890 COMMONWEALTH OF VIRGINIA

Document Certification Form No. DC - II
(Revised 8/11)

REMEDIAL INVESTIGATION COMPLETION CERTIFICATION
15A NCAC 13C.0306(b)(5)(B)

Media (check all that apply): ☐ All Media ☑ Soil ☑ Ground water ☐ Surface water ☐ Sediment

REC is in compliance with both 15A NCAC 13C .0305(b)(2) and .0305(b)(3): [check] ☑

Site Name: Towers Road Disposal Areas
County: Perquimans
Site ID No.: NONCD0002893

Street Address: 2835 Harvey Point Road
Hertford, NC 27944

The remedial investigation, which is the subject of this certification has, to the best of my knowledge, been completed in compliance with the Inactive Hazardous Sites Response Act N.C.G.S. 130A-310, et seq. and the remedial action program Rules 15A NCAC 13C .0300. I am aware that there are significant penalties for willfully submitting false, inaccurate or incomplete information.

RSM Signature

4·6·16
Date

Kim Henderson
RSM Name

CH2M HILL, Inc/Kim Henderson
REC Name

00006
REC No.

5701 Cleveland Street, Suite 200
Mailing Address

Virginia Beach, VA 23462
City, State, ZIP

NOTARIZATION

Virginia (Enter State)

Virginia Beach **COUNTY**

I, Rebecca Singleton, a Notary Public of said County and State, do hereby certify that Kim Henderson did personally appear and sign before me this day, produced proper identification in the form of Drivers License, was duly sworn or affirmed, and declared that, he or she is the duly authorized environmental consultant of the remediating party of the property referenced above and that, to the best of his or her knowledge and belief, after thorough investigation, the information contained in the above certification is true and accurate, and he or she then signed this Certification in my presence.

WITNESS my hand and official seal this 6th day of April, 2016

Notary Public (signature)

(OFFICIAL SEAL)

REBECCA S SINGLETON
NOTARY PUBLIC
MY COMMISSION NUMBER 180890
COMMONWEALTH OF VIRGINIA

My commission expires: 12/31/16

Work Phase Completion Form No. WPC – II
(Revised 12/13)

Contents

Acronyms and Abbreviations ..... **viii**

1 Introduction **1-1**
1.1 Objectives and Scope 1-1
1.2 Report Content 1-2

2 Site Background **2-1**
2.1 Facility Description and History 2-1
2.2 Site Description and History 2-2

3 Field Activities **3-1**
3.1 Phase I and Phase II Remedial Investigation - Background Investigation 3-1
3.1.1 Soil Sampling 3-1
3.1.2 Groundwater Sampling 3-2
3.2 Phase I Remedial Investigation Activities 3-2
3.2.1 Geophysical Survey 3-2
3.2.2 Test Pitting 3-2
3.2.3 Soil Sampling 3-3
3.2.4 Groundwater Sampling and Water Level Measuring 3-3
3.2.5 IDW Management 3-4
3.3 Waste and Soil Remedial Action 3-5
3.4 Phase II Remedial Investigation Activities 3-5
3.4.1 Soil Sampling 3-5
3.4.2 Groundwater Sampling 3-6
3.4.3 Investigation-Derived Waste Management 3-9
3.4.4 Surveying 3-9
3.5 Deviations from the Work Plans 3-9
3.6 Quality Assurance and Quality Control 3-11

4 Geology/Hydrogeology **4-1**
4.1 Site Geology 4-1
4.2 Site Hydrogeology 4-1

5 Nature and Extent of Contamination **5-1**
5.1 Data Evaluation 5-1
5.2 2nd Street Disposal Area 5-2
5.2.1 Extent of Waste 5-2
5.2.2 Soil 5-2
5.2.3 Groundwater 5-2
5.3 5th Street Disposal Area 5-3
5.3.1 Extent of Waste 5-3
5.3.2 Soil 5-3
5.3.3 Groundwater 5-5
5.3.4 Summary 5-6

6 Contaminant Fate and Transport **6-1**
6.1 VOCs 6-1
6.1.1 Chlorinated Aliphatic VOCs 6-2
6.1.2 Chlorobenzenes 6-3
6.1.3 Fuel Compounds 6-3

6.2 Metals 6-4
6.2.1 Iron and Manganese 6-4
6.2.2 Cobalt 6-4
6.2.3 Vanadium 6-5
6.3 Natural Attenuation Evaluation 6-5
6.3.1 Dissolved Oxygen 6-5
6.3.2 Oxidation-reduction Potential 6-5
6.3.3 Nitrate/Nitrite 6-5
6.3.4 Ferric Iron/Ferrous Iron 6-6
6.3.5 Sulfate/Sulfide 6-6
6.3.6 Methane 6-6
6.3.7 Total Organic Carbon 6-6
6.3.8 Temperature 6-7
6.3.9 Natural Attenuation Summary 6-7
6.4 Risk Receptors 6-7
6.4.1 Human Health 6-7
6.4.2 Ecological 6-7
6.5 Summary 6-7

7 Conclusions and Recommendations 7-1
7.1 Conclusions 7-1
7.2 Recommendations 7-2

8 References 8-1

Attachments

A Soil Boring Logs and Well Completion Diagrams
B Analytical Data
C Topographic Surveys
D Laboratory Reports

Tables

1 Crosswalk to Required Information
2 Background Soil Sample Summary
3 Background Groundwater Sample Summary
4 Monitoring Well Construction Summary
5 Groundwater Field Parameters Summary
6 Water Level Measurements Summary
7 Site-specific Surface Soil Sample Summary
8 Site-specific Subsurface Soil Sample Summary
9 Site-specific Monitoring Well Groundwater Sample Summary
10 Site-specific DPT Groundwater Sample Summary
11 Site-specific Confirmation Sample Summary
12 Surficial Aquifer Properties
13 Background Soil Sample Results Summary (Metals Only)
14 Background Groundwater Sample Results Summary (Metals Only)
15 Remaining Soil Samples Detections and Exceedances – 2nd Street Disposal Area
16 Groundwater Samples Detections and Exceedances – 2nd Street Disposal Area
17 Summary of Chemicals of Concern and Preliminary Cleanup Levels

18 Remaining Soil Samples Detections and Exceedances – 5th Street Disposal Area
19 Groundwater Samples Detections and Exceedances – 5th Street Disposal Area
20 VOC COC Properties
21 Natural Attenuation Evaluation Parameters Summary

Figures

1 HPDTA Location
2 TRDA REC Program RI/RA Timeline
3 Water Supply Well Locations
4 Site Location
5 TRDA REC Program Milestones
6 2nd Street Disposal Area Sample Locations
7 5th Street Disposal Areas Sample Locations
8 TRDA Background Sample Locations
9 Groundwater Contour Map
10 Location of Geological Cross Sections
11 Geological Cross Sections
12 2nd Street Disposal Area Remaining Soil Sample Results – Exceedances Only
13 2nd Street Disposal Area Groundwater Sample Results – Exceedances Only
14 2nd Street Disposal Area Groundwater COC Results – VOCs
15 2nd Street Disposal Area Groundwater COC Results – Metals
16 5th Street Disposal Area Remaining Soil Sample Results – Exceedances Only
17 5th Street Disposal Area Groundwater Sample Results – Exceedances Only
18 5th Street Disposal Area Groundwater COC Results – VOCs
19 5th Street Disposal Area Groundwater COC Results – Metals
20 2nd Street Disposal Area Current Extent of Groundwater Contamination
21 5th Street Disposal Area Current Extent of Groundwater Contamination

Acronyms and Abbreviations

°C	degrees Celsius
µg/L	micrograms per liter
APP	Accident Prevention Plan
ASTM	American Society for Testing and Materials
atm-m^3/M	atmosphere-cubic meter per mole
ATS	ATS International, Inc.
bgs	below ground surface
C4	Composition 4 Explosive
CH2M	CH2M HILL, Inc.
CLEAN	Comprehensive Long-term Environmental Action, Navy
COC	chemical of concern
COPC	constituent of potential concern
DO	dissolved oxygen
DoD	Department of Defense
DPT	direct push technology
DR	Determination Request
EM31	Geonics, Ltd., EM31-MK2
ESS	Explosives Safety Submission
f_{oc}	fraction of organic carbon
FQM	field quality manager
ft/day	feet per day
ft/ft	foot per foot
GPS	global positioning system
HPDTA	Harvey Point Defense Testing Activity
HSA	hollow-stem auger
IDW	investigation derived waste
INRMP	Integrated Natural Resources Management Plan
IRAP	Interim Remedial Action Plan
K_d	distribution coefficient
K_h	Henry's Law Constant
K_{oc}	soil organic carbon partition coefficient
L/min	liters per minute.
mg/kg	milligrams per kilogram
mg/L	milligrams per liter
mL/g	milliliters per gram
MPPEH	material potentially presenting an explosive hazard
msl	mean sea level
MTBE	methyl tert-butyl ether
mV	millivolt
Navy	United States Department of the Navy
NC GW-IMAC	North Carolina Groundwater-Interim Maximum Allowable Concentration
NC2LGW	North Carolina Administrative Code 15A-2L Standard

NCDENR	North Carolina Department of Environment and Natural Resources
NCDEQ	North Carolina Department of Environmental Quality
OHM	OHM Remediation Services Corp.
ORP	oxidation-reduction potential
PA	Preliminary Assessment
PAH	polycyclic aromatic hydrocarbon
PCB	polychlorinated biphenyl
PCE	tetrachloroethene
PID	photoionization detector
PSRG	preliminary soil remediation goal
PVC	polyvinyl chloride
QA	quality assurance
QAPP	Quality Assurance Project Plan
QC	quality control
RA	Remedial Action
RAP	Remedial Action Plan
REC	Registered Environmental Consultant
RI	Remedial Investigation
SOP	standard operating procedure
SVOC	semivolatile compound
TAL	target analyte list
TCL	target compound list
TIC	tentatively identified compound
TOC	total organic carbon
TRDA	Towers Road Disposal Areas
USEPA	United States Environmental Protection Agency
VOC	volatile organic compound

SECTION 1

Introduction

This report summarizes the Remedial Investigation (RI) that was conducted at the Towers Road Disposal Areas (TRDA), Harvey Point Defense Testing Activity (HPDTA) in Hertford, North Carolina (**Figure 1**). Field activities were initiated in May 2013 and completed in February 2016.

The RI was performed under Department of the Navy (Navy) Multimedia Contract Number N62470-10-D-3009, Contract Task Order 0020 and the Comprehensive Long-term Environmental Action, Navy (CLEAN) Contract Number N62470-08-D-8012, Contract Task Order 0017 for submittal to Naval Facilities Engineering Command Atlantic and HPDTA.

1.1 Objectives and Scope

In accordance with the Registered Environmental Consultant (REC) guidance (NCDEQ, 2015), the RI purposes are to identify all releases of hazardous substances to the environment, identify potential exposure pathways, characterize the chemical nature of such releases and collect sufficient sampling data to support a cleanup-level determination, delineate the aerial and vertical extent of contamination, and characterize site conditions sufficiently to conduct a Feasibility Study of remedial alternatives and to support a proposed remedy.

The TRDA RI was conducted in two phases to achieve the REC Program RI purpose. The objectives of the Phase I RI were to identify waste disposal areas, characterize the chemical nature of releases/disposal activities, and collect sufficient data to establish preliminary remediation goals. The objectives of the Phase II RI were to further evaluate soil and groundwater background conditions to aid in the evaluation of potential releases to environmental media, delineate the lateral and vertical extent of contamination in each area of concern, and characterize the site conditions sufficiently to conduct a Feasibility Study to support a proposed remedy.

To achieve the objectives, the following general activities were conducted:

- Collected soil and groundwater samples to establish site-specific background values
- Completed a geophysical survey to determine the extent of buried debris
- Conducted test pitting to evaluate the horizontal and vertical extents and nature of buried debris
- Installed monitoring wells to provide groundwater data collection points
- Measured groundwater levels at the site to develop a potentiometric surface map
- Collected soil and groundwater samples to evaluate the nature and extent of chemical releases
- Completed a civil survey of site conditions

The RI was conducted in accordance with the following guidance and documents:

- *Registered Environmental Consultant Program Implementation Guidance* (NCDEQ, 2015)
- *Remedial Investigation Work Plan, Towers Road Disposal Areas* (CH2M, 2013a), herein referred to as the Phase I RI work plan
- *Remedial Investigation Work Plan Addendum, Towers Road Disposal Areas* (CH2M, 2013b), herein referred to as the Phase I RI work plan addendum
- *Explosives Safety Submission Determination Request for Towers Road Disposal Areas 5th Street Disposal Area* (CH2M, 2014d), herein referred to as the 5th Street Disposal Area Explosives Safety Submission (ESS) Determination Request (DR)

- *Phase II Remedial Investigation Work Plan, Towers Road Disposal Areas* (CH2M, 2014b), herein referred to as the Phase II RI work plan
- *Explosives Safety Submission for Towers Road Disposal Areas 2nd Street Disposal Area* (CH2M, 2015b), herein referred to as the 2nd Street Disposal Area ESS
- *Phase II Remedial Investigation Work Plan Addendum* (CH2M, 2015d), herein referred to as the Phase II RI work plan addendum
- *Explosives Safety Submission Determination Request for Towers Road Disposal Areas 2nd Street Disposal Area* (CH2M, 2016a), herein referred to as the 2nd Street Disposal Area ESS DR

To expedite site remediation and closure, a Remedial Action (RA) was conducted during the RI phase to remove waste and soil, which were the presumed sources of contamination to groundwater. The RA was conducted in accordance with the Remedial Action Plan (RAP)[1] (CH2M, 2014c) and RAP addendum (CH2M, 2015c). **Figure 2** presents a detailed timeline of RI and RA activities.

1.2 Report Content

This report provides site background information; summarizes the investigation activities; presents the results of the investigations, including the site data, nature and extent of contamination, and fate and transport; and presents conclusions and recommendations. The Phase I RI was previously reported (CH2M, 2014a); therefore, this documents summarizes the Phase I RI information. In addition, as a result of the RA, site conditions changed significantly between the start of the Phase I RI and the completion of the Phase II RI. This report presents all site investigation results, but data evaluation focuses on information representative of the current site conditions remaining in-place following completion of the RA to remove waste and soil (for example, data from sample locations removed during the RA are excluded from the nature and extent of contamination discussion). A crosswalk table (**Table 1**) provides the location in this report of information required by the REC guidance (NCDEQ, 2015).

[1] The Interim Remedial Action Plan (IRAP) and Preconstruction Report document was submitted to the REC Program in April 2014. Following submittal, because the remedy was designed to remove waste and meet the remedial goals for soil, the IRAP subsequently was changed to remove “interim” and is now considered the RA for waste and soil.

SECTION 2

Site Background

2.1 Facility Description and History

A brief description of HPDTA (**Figure 1**) is provided as follows.

Operational History: The facility was commissioned in 1943 as a Navy seaplane pilot training installation until the end of World War II. Since 1961, HPDTA has been an active Department of Defense (DoD) facility, which currently tests and evaluates ordnance and ballistic materials and conducts related training.

Location: The facility is located at 2835 Harvey Point Road, Hertford, Perquimans County, North Carolina (36°06'13.02" N and 76°19'59.03"W) and is bounded by surface water on three sides: the Perquimans River to the north and the Albemarle Sound to the south and east. Land west of the facility is mostly agricultural land with some residential properties.

Ownership: The DoD currently owns HPDTA. The original purchase of the Harvey Point property occurred as a result of a condemnation civil suit in March 1943, which conveyed 1,264.5 acres to the United States Government. Between 1958 and 2007, more than 1,600 additional acres were acquired through subsequent transactions; however, details on the dates, areas, and former property ownership are not currently available.

Acreage: 2,914 acres.

Environmental Setting: The facility is composed of upland forests, wetlands, grass fields, and urban/developed land (HPDTA, 2013).

Natural Resources: The extensive shoreline along the Perquimans River and the Albemarle Sound, bottomland hardwood swamps, and pine forests are the most significant natural resources at HPDTA.

Geology and Topography: HPDTA lies within the Outer Atlantic Coastal Plain physiographic province. The Coastal Plain consists of surficial deposits, undivided sand, clay, gravel, and peat deposited in marine, fluvial, eolian, and lacustrine environments. The surficial sediments are generally underlain by the Yorktown Formation, which consists of fossiliferous clay with varying amounts of fine-grained sand and bluish-gray shell material commonly concentrated in lenses north of the Neuse River. More than 50 percent of the Outer Coastal Plain is gently sloping, with relief of less than 30 feet above mean sea level (msl). The topography of HPDTA is largely flat and undifferentiated with elevations ranging from sea level along the shoreline of the Albemarle Sound and the Perquimans River to 9 feet above msl, with the higher elevations primarily occurring along Towers Boulevard, which traverses the center of the property from east to west, and at Harvey Point, the far eastern tip of the facility. A United States Geological Survey topographic map displaying the area within a 1-mile radius of the disposal area is included in the Phase I RI work plan (CH2M, 2013a). Soil types at the facility consist of Chowan silt loam, Dogue fine sandy loam, Roanoke silt loam, Tomotley fine sandy loam, and loamy Udorthents (HPDTA, 2013).

Hydrogeology: HPDTA is located on a low-lying peninsula that is part of the Albemarle-Pamlico Drainage Basin. In general, surface and groundwater flow directions are controlled by topographic contours of land forms in the Coastal Plain, with flow occurring perpendicular to the contours from high to low elevations. A small portion of HPDTA drains into the Perquimans River, with the majority flowing into the Albemarle Sound. Because of the area's flat terrain, much of the land is poorly drained. Sluggish streams, marshes, and swamps are common. The natural hydrology at HPDTA has been altered by ditches to improve drainage. Extensive drainage systems and relic furrows are visible on land that was previously drained and used for agriculture (HPDTA, 2013).

Land Usage: Major land uses at the facility include administration, an airfield/runway, training and test ranges, areas of undeveloped forested and agricultural land, and station roads that connect the various buildings.

Water Supply: HPDTA uses four supply wells, ranging in depth from 80 to 120 feet below ground surface (bgs) to meet the water needs for the facility (**Figure 3**). Groundwater from the supply wells is pumped into a vertical aboveground storage tank, treated with chlorine, then pumped into an elevated water tower for distribution into the HPDTA water system.

Environmental Investigation: From 1991 through 1994, a Preliminary Assessment (PA) was conducted at HPDTA to identify potential sources of contamination, excluding those related to munitions operations, and to determine compliance with environmental laws and regulations (Potomac-Hudson Engineering, 1994). The conclusions indicated that activities conducted during the 1960s and 1970s resulted in the release of polychlorinated biphenyls (PCBs) to surface soil in three confined locations totaling less than 0.4 acre; the limited release of petroleum, oil, and lubricants to surface soil in two locations totaling less than 0.1 acre; and a scrap metal disposal area approximately 0.2 acre in size. These six areas of potential contamination were identified and remediated, and no other significant contaminant releases through air, soil, or surface water pathways were identified. Potential releases to groundwater were identified from former scrap metal land filling and drum storage areas; however, there were no threats identified as Comprehensive Environmental Response, Compensation, and Liability Act “primary targets” (Potomac-Hudson Engineering, 1994). Electronic correspondence from the United States Environmental Protection Agency (USEPA) indicates that the sites identified in the 1994 PA had been classified “No Further Remedial Action Planned”.

2.2 Site Description and History

TRDA consists of the 2nd Street Disposal Area and 5th Street Disposal Area, both located in the northern portion of HPDTA (**Figure 1**). The 2nd Street Disposal Area is an approximately 2.5-acre area in the northeastern and southeastern quadrants of the intersection of 2nd Street and Flat Run Road and is primarily a grassy field (**Figure 4**). The 5th Street Disposal Area is an approximately 2.7-acrea area north and south of Flat Run Road approximately 1,000 feet east of the 2nd Street Disposal Area and contains a concrete pad (**Figure 4**). The ground surface at both areas is relatively flat, ranging from 4 to 6 feet above msl at the 2nd Street Disposal Area and 5 feet to 7.5 feet above msl at the 5th Street Disposal Area. Neither the 2nd Street Disposal Area nor 5th Street Disposal Area is currently used, and the reasonably anticipated future land use of the areas is not expected to change.

The 5th Street Disposal Area is one of the areas identified within the facility-wide PA as having had a PCB release. The removal action to address the PCB-impacted area of the 5th Street Disposal Area was conducted in 1996. It consisted of excavation and offsite disposal of 2,544 tons of PCB-contaminated soil within the 5th Street Disposal Area. The removal action was conducted adjacent to the concrete pad at the 5th Street Disposal Area, but a survey of the removal action extent is not available. Confirmation samples from the removal action indicated that PCBs remained in place after the completion of the removal action (OHM, 1997).

The 2nd Street Disposal Area was discovered by HPDTA on September 20, 2011. During follow-up interviews, employees indicated the 5th Street Disposal Area had also been used for disposal operations. Interviews with facility personnel indicated trash disposal occurred at TRDA until the 1980s. The contents of the waste disposal areas were not fully documented but were reported to include paper, utensils, computer disks, broken dishes, glass, and ordnance items (not to include ammunition) and drums at the 2nd Street Disposal Area; and safes, metal cars, and PCBs at the 5th Street Disposal Area. Anecdotal information from the facility indicated that the concrete pad on the northern side of the 5th Street Disposal Area was used to destroy mock ups of typical breaching activities using various explosive charges, including Composition 4 Explosive (C4).

In 2011, geophysical surveys were conducted at the 2nd Street Disposal Area and 5th Street Disposal Area to evaluate the potential presence of buried waste. Buried waste was identified at both disposal areas, but not fully delineated (ATS, 2011a, 2011b). Following the surveys, in November 2011, TRDA was reported to the North Carolina Department of Environment and Natural Resources (NCDENR), now known as the North Carolina Department of Environmental Quality (NCDEQ).

In 2012, soil and groundwater samples were collected at four locations at the 2nd Street Disposal Area and four locations at the 5th Street Disposal Area. Each sample was collected from a geoprobe boring at a depth of 8 to 12 feet bgs. The samples were analyzed for target compound list (TCL) volatile organic compounds (VOCs) and target analyte list (TAL) metals. The sampling was required by NCDENR after the site was reported in order for the state to determine whether or not the site could be entered into the REC Program. This report incorporates the results from the 2012 sampling event.

TRDA was established as Site Identification Number NONCD0002893 under the REC Program when an Administrative Agreement for REC-directed voluntary assessment and RA was signed in April 2013 (NCDENR, 2013). The agreement specifies that HPDTA (the remediating party) is responsible for assessing and remediating the areas contaminated through previous disposal practices. HPDTA selected CH2M HILL (CH2M) as the REC for TRDA. The REC Program establishes mandatory work phase completion deadlines for the site. **Figure 5** shows a timeline of site activities, reporting, and key milestones within the REC Program.

SECTION 3

Field Activities

This section summarizes the Phase I and Phase II RI activities and the RA field activities, which were conducted during the RI phase. Investigation and RA location information is compiled on **Figure 6** (2nd Street Disposal Area) and **Figure 7** (5th Street Disposal Area). Based on the site location within the secure facility boundary and the protective measures that were implemented, as described in the Phase I RI Accident Prevention Plan (APP) (CH2M, 2013a) and the RA/Phase II RI APP (CH2M, 2015a), there were no impacts to the surrounding community from exposure to site contaminants during the RI and RA field activities. Photographs taken during Phase I activities are included the Phase I RI Report (CH2M, 2014a). Site photographs were not taken during Phase II activities because of facility restrictions.

3.1 Phase I and Phase II Remedial Investigation - Background Investigation

Soil and groundwater sampling was performed during both Phase I (June 2013) and Phase II (May 2014) of the RI to establish site-specific background values to support evaluation of whether detected constituents of potential concern (COPCs) are associated with the disposal activities or other potential anthropogenic sources (**Figure 8**). Samples were collected primarily from areas within the Dogue Fine Sandy Loam soil type, consistent with the soil type at TRDA. Background samples were collected upgradient, sidegradient, and downgradient[2] of TRDA.

During Phase I, the background samples were analyzed for TAL metals, excluding mercury except at HPDTA-BG-SS03 (most upgradient sample) and hexavalent chromium at HPDTA-BG-SS03 (most upgradient sample). During Phase II, the background samples were analyzed for polycyclic aromatic hydrocarbons (PAHs). A summary of the background soil and groundwater samples is included in **Table 2** and **Table 3**, respectively.

Dibenzofuran was inadvertently included with the list of analytes and reported along with the background PAH results for soil and groundwater; however, since dibenzofuran is not a PAH, the associated soil and groundwater background results are not used for comparison of site-specific sampling results to background concentrations.

3.1.1 Soil Sampling

Discrete surface and subsurface soil samples were collected at five locations to establish a background data set. The surface soil samples were collected below the topsoil layer at a depth of 6 to 12 inches bgs. The surface samples were collected using disposal trowels. Subsurface soil samples were collected using a direct-push technology (DPT) rig. During the Phase I RI, the subsurface soil samples were collected from two depth intervals: 6 to 12 inches bgs and the 2-foot interval above the water table (encountered at 5 to 8 feet bgs), to be consistent with the planned site-specific subsurface soil sample depth intervals. During the Phase II RI, because the background shallow subsurface depth interval was consistent with the background surface soil sample depth interval, the subsurface sample was only collected at one depth interval, the 2-foot interval above the water table (encountered at approximately 4 feet bgs). Continuous soil cores were retrieved from each boring using an open core barrel and piston DPT sampling device along with 4- and 5-foot disposable acetate liners. Excess soil from sampling activities was returned to the sample location.

[2] Although downgradient background locations are not typical, this location was believed to be outside of the area of impact TRDA. If concentrations of metals and PAHs were noticeably different in this soil sample location than the others, the location would not be included in the background data set

3.1.2 Groundwater Sampling

Groundwater samples were collected from four monitoring wells installed during the Phase I RI to establish a background data set. A North Carolina-licensed driller conducted the drilling and monitoring well installation activities in accordance with the North Carolina Well Construction Standards. Monitoring well construction details are summarized in **Table 4**. The well completion diagrams and soil boring logs are included in **Attachment A**.

Groundwater was sampled using a peristaltic pump and following low-flow sampling protocol. Before sampling, the pump intake was positioned at the midpoint of the screened interval (approximately 17 feet bgs), and groundwater was extracted at a low rate (between 0.2 and 0.5 liter per minute [L/min]) while periodic measurements, including pH, specific conductance, dissolved oxygen (DO), oxidation-reduction potential (ORP) and temperature, were recorded until the parameters stabilized. Additionally, Hach field test kits were used to analyze for ferrous iron and DO at the time of sample collection. The water-level indicator probes and cable were decontaminated between each sample location, and the decontamination fluids and purge water were contained in 55-gallon drums for staging and subsequent disposal. Water quality parameters at the time of the sample collection are presented in **Table 5**, and water level measurements are presented in **Table 6**.

3.2 Phase I Remedial Investigation Activities

The Phase I RI activities were conducted from May 2013 to August 2013 and included geophysical surveying, test pitting, collecting and analyzing surface and subsurface soil samples, collecting and analyzing groundwater samples, measuring groundwater levels, and managing and disposing of investigation-derived waste (IDW). Test pit and sample locations are shown on **Figure 6** and **Figure 7**. Support activities included performing utility location prior to intrusive activities, installing erosion and sediment controls, clearing vegetation, installing monitoring wells, and performing a topographic survey, and are documented in the Phase I RI Report (CH2M, 2014a).

3.2.1 Geophysical Survey

A geophysical survey was conducted to determine the lateral extent (that is, footprint) of suspected buried debris. The geophysical investigation at the 2nd Street Disposal Area and 5th Street Disposal Area was completed using the Geonics, Ltd., EM31-MK2 (EM31) terrain conductivity meter based on its capability to identify metallic and non-metallic debris. EM31 data were collected along parallel survey lines spaced approximately 5 feet apart and extending across the accessible portions of each investigation area. This relatively tight survey lane spacing is appropriate for delineating the lateral extent of suspected disposal areas. The EM31 was operated in the vertical dipole orientation, which provides an effective depth of investigation of approximately 18 feet. NAEVA Geophysics Inc. used real-time kinematic global positioning systems (GPSs) to record the locations of the survey lines and subsequently translate the EM31 data into geo-referenced coordinates. At the time of the geophysical investigation, the types and quantities of suspected debris at each site were not known. Details of the geophysical survey approach, including equipment, survey execution, and quality control (QC) measures, are provided in the final geophysical report (CH2M, 2014a).

3.2.2 Test Pitting

Following completion of the geophysical survey, test pits were excavated at the 2nd Street Disposal Area and 5th Street Disposal Area to evaluate what types of waste are present, aid in selecting soil sample locations, and assist with waste characterization for anticipated future disposal (**Figure 6** and **Figure 7**). Test pitting continued vertically until the water table was encountered (generally 4 to 6 feet bgs), with the exception of one test pit that was excavated below the water based on evidence from the facility that drums were buried at that specific location (Test Pit 60). In total, 30 test pits were excavated at each disposal area. Test pitting materials were placed back into the excavation area, and the excavation area was restored by applying a permanent seed mix. Heavy equipment used to excavate the test pits

was decontaminated using dry methods consisting of removing excess dirt from the equipment following completion of each test pit.

3.2.3 Soil Sampling

Soil sampling was conducted to characterize the chemical nature of releases/disposal activities (**Figure 6** and **Figure 7**). The soil sampling was conducted in accordance with the Quality Assurance Protection Plan (QAPP) (CH2M, 2013a). Summaries of the RI soil samples are provided in **Table 7** (surface soil) and **Table 8** (subsurface soil).

3.2.3.1 Surface Soil

Five surface soil samples were collected from each disposal area using a hand auger. Samples were collected from 0 to 6 inches bgs, with the exception of samples for VOCs analysis, which were collected at 6 to 12 inches bgs.

The following parameters were analyzed and reported for each sample:

- TCL VOCs (grab sample) including tentatively identified compounds (TICs)
- TCL semivolatile organic compounds (SVOCs) (four-point composite sample) including TICs
- TCL Pesticides/PCBs (four-point composite sample)
- TAL metals (excluding mercury) (four-point composite sample)

Additionally, three samples (two samples from the 2nd Street Disposal Area and one sample from the 5th Street Disposal Area) were selected based on their proximity to the elevated chromium and mercury detections during the 2012 sampling event and analyzed for the following additional parameters:

- Mercury
- Hexavalent chromium

3.2.3.2 Subsurface Soil

Thirteen soil borings were advanced using the DPT rig: seven at locations within the 2nd Street Disposal Area and six at locations within the 5th Street Disposal Area (**Figure 6** and **Figure 7**). Continuous soil cores were retrieved from each boring using an open core barrel and piston DPT sampling device along with 4-foot-long disposable acetate liners. All of the borings were advanced to the water table. Soil samples were collected at two depth intervals: 0.5 to 1 foot bgs and the 2-foot interval above the water table (encountered at 5 to 8 feet bgs at the 2nd Street Disposal Area and 4 to 6 feet bgs at the 5th Street Disposal Area). The field team used the photoionization detector (PID) to screen each soil core. There was no elevated responses; therefore, composite samples were collected across the depth interval, with the exception of VOC samples, which were not homogenized. The following parameters were analyzed and reported for each sample:

- TCL VOCs including TICs
- TCL SVOCs including TICs
- TCL pesticides/PCBs
- TAL metals (excluding mercury)

Additionally, two sample locations from each disposal area were selected based on their proximity to the elevated chromium and mercury detections during the 2012 sampling event and were analyzed for the following additional parameters:

- Mercury
- Hexavalent chromium

3.2.4 Groundwater Sampling and Water Level Measuring

Groundwater sampling was conducted to characterize the chemical nature of releases/disposal activities and characterize the site conditions sufficiently to conduct a Feasibility Study. Groundwater samples

were collected from monitoring wells installed during the Phase I RI[3] and DPT sample locations (**Figure 6** and **Figure 7**). A North Carolina-licensed driller conducted drilling and monitoring well installation activities in accordance with the North Carolina Well Construction Standards and the applicable standard operating procedure (SOP), and are documented in the Phase I RI Report (CH2M, 2014a). Monitoring well construction details are summarized in **Table 4**. The well completion diagrams and soil boring logs are included in **Attachment A**. Monitoring well construction permits are not included for the wells, as permits were not obtained based on information provided to CH2M from the North Carolina Division of Water Quality Washington Regional Office that well permits are not required for installation by government entities installing wells on government property.

The following parameters were analyzed/reported by the laboratory for monitoring well groundwater samples within the disposal areas, as summarized in **Table 9**:

- TCL VOCs including TICs
- TCL SVOCs including TICs
- TCL pesticides/PCBs
- TAL metals (excluding mercury)
- *Dehalococcoides* (one sample per disposal area)
- Alkalinity
- Chloride
- Dissolved gases; methane
- Nitrate/Nitrite
- Sulfate/Sulfide
- Total organic carbon (TOC)

Groundwater grab samples were collected from three locations at the 2nd Street Disposal Area and four locations at the 5th Street Disposal Area to provide spatial coverage of areas where monitoring wells were not installed. Groundwater grab samples were collected from the top of the water table to 4 feet below the water table at all of the DPT soil boring locations that were not co-located with a monitoring well. The groundwater grab samples were analyzed in the laboratory and reported for TCL VOCs and SVOCs including TICs, as summarized in **Table 10**.

Groundwater was sampled using a peristaltic pump and following low-flow sampling protocol. Before sampling, the pump intake was positioned at the midpoint of the screened interval (approximately 17 feet bgs) and groundwater was extracted at a low rate (between 0.2 and 0.5 L/min) while periodic measurements, including pH, specific conductance, DO, ORP and temperature, were recorded until the parameters stabilized. Additionally, Hach field test kits were used to analyze for ferrous iron and DO at the time of sample collection. The water-level indicator probes and cable were decontaminated between each sample location and the decontamination fluids and purge water were contained in 55-gallon drums for staging and subsequent disposal. Water quality parameters at the time of the sample collection are presented in **Table 5**, and water level measurements are presented in **Table 6**.

3.2.5 IDW Management

Phase I RI IDW consisting of soil cuttings from the monitoring well installation, purged/excess groundwater from monitoring well development and sampling, and decontamination fluids was placed in 55-gallon drums. As required by the disposal facility, the contents of the drums were sampled for VOCs, SVOCs, metals, herbicides, and pesticides using the toxicity characteristic leaching procedure method, and ignitability and corrosivity. The results characterized the IDW as nonhazardous. During the Phase I RI, 17 solid and 12 aqueous 55-gallon drums were transported as nonhazardous waste to a permitted

[3] Monitoring well construction details are summarized in Table 4. The well completion diagrams and soil boring logs are included in Attachment A.

disposal facility (The Environmental Quality Company – Atlanta). Personal protective equipment and disposable sampling equipment were placed in black, non-translucent garbage bags and disposed of in an onsite dumpster at the HPDTA Recycling Center.

3.3 Waste and Soil Remedial Action

To expedite site remediation and closure, the RA was conducted before completing the RI to remove waste and soil, which were the presumed sources of contamination to groundwater. The RA was conducted from May 2014 to November 2015. The long duration was the result of the discovery of material potentially presenting an explosive hazard (MPPEH) at the 2nd Street Disposal Area in August 2014. There was a break in the fieldwork from August 2014 to October 2015 for plan revisions to address the potential explosive hazard. RA activities were conducted in accordance with the RAP (CH2M, 2014c), RAP addendum (CH2M, 2015c), 5th Street Disposal Area ESS DR (CH2M, 2014d), and 2nd Street Disposal Area ESS (CH2M, 2015b). The preliminary extent of impacted soil was determined based on the results of Phase I soil samples and additional delineation samples collected during Phase II soil sampling (**Section 3.4.1**). The final extent of waste and impacted soil were excavated based on visual inspections, digital geophysical mapping surveys, and confirmation soil (floor and wall) sampling; and disposed offsite.

The excavation extent at the 2nd Street Disposal Area was approximately 0.7 acre. The majority of the excavation ranged in depth from surficial to approximately 5 feet bgs; however, there were isolated areas excavations up to 10 feet bgs. The excavation extent at the 5th Street Disposal Area was approximately 0.9 acre, and included removal of waste in trenches to approximately 8 feet bgs (CH2M, 2016b). The excavation boundaries are presented on **Figure 6** and **Figure 7**. Following completion of RA excavation activities, confirmation sampling was conducted to verify the horizontal and vertical extents of the excavations were sufficient. A summary of the RA confirmation samples is provided in **Table 11**, and the analytical results are included in **Attachment B**. Confirmation sampling included collecting wall samples approximately every 75 linear feet along the excavation perimeters and floor samples from approximately 50- by 50-foot grids (excluding areas where the excavation floor was below the water table) (**Figure 6** and **Figure 7**). A detailed description of the RA site activities and results are discussed in the Remedial Action Construction Completion/Remedial Action Completion Report (CH2M, 2016b) and the results are summarized in **Section 5.2.2** and **Section 5.3.2**.

3.4 Phase II Remedial Investigation Activities

The Phase II RI was initiated in May 2014 and completed in March 2016. The duration of the investigation is a result of delays associated with the discovery of MPPEH and implementation of the RA; actual investigation field activities were conducted in May 2014 and from December 2015 to March 2016. Investigation activities included collecting and analyzing surface and subsurface soil samples, collecting and analyzing groundwater samples, measuring groundwater levels, and managing and disposing of IDW. Sample locations are shown on **Figure 6** and **Figure 7.** Support activities included utility location prior to intrusive activities, monitoring well installation, and performing a topographic survey. The Phase II RI was conducted in accordance with the work planning documents (CH2M, 2014b, 2015d), except as noted in **Section 3.5**.

3.4.1 Soil Sampling

Before the RA, surface and subsurface soil samples were collected along the perimeter of the estimated extent of waste and impacted soil to delineate the horizontal and vertical extent of the soil contamination prior to RA excavation. In addition, subsurface soil samples were collected within the estimated extent of waste and impacted soil to further characterize the nature of releases/disposal activities. Soil sampling was conducted in accordance with the QAPP (CH2M, 2014b). Summaries of the Phase II RI soil samples provided in **Table 7** (surface soil) and **Table 8** (subsurface soil).

Surface soil samples were collected using disposal trowels. Subsurface soil samples were collected using a DPT rig. Continuous soil cores were retrieved from each boring using an open core barrel and piston DPT sampling device along with 4- and 5-foot-long disposable acetate liners. All borings were advanced to 6 feet bgs or the water table (depending on which was encountered first). Subsurface soil samples were collected from two depth intervals: 1 to 3 feet bgs and the 1- to 2-foot interval about the water table (encountered at 4 to 5 feet bgs). Excess soil from sampling activities was returned to the sample location.

2nd Street Disposal Area:

Delineation samples were collected from nine co-located surface/subsurface soil sample locations (**Figure 5**) for analysis as summarized in **Table 7** and **Table 8** based on the surface and subsurface soil COPCs identified during the Phase I RI (CH2M, 2014a). Analysis of the delineation samples included the following:

- Select VOCs (subsurface only)
- Select SVOCs
- Select PCBs
- Select metals

Additional characterization subsurface soil samples were collected at two locations and analyzed for 1,4-dioxane because of the detection of chlorinated VOCs in subsurface soil during the Phase I RI, per REC guidance (NCDEQ, 2015). Sample locations were based on Phase I RI VOC results and biased towards areas with the highest detections of chlorinated VOCs.

5th Street Disposal Area:

Delineation samples were collected from 12 co-located surface/subsurface soil sample locations (**Figure 8**) for analysis as summarized in **Table 7** and **Table 8** based on the surface and subsurface soil COPCs identified during the Phase I RI (CH2M, 2014a). Analysis of the delineation samples included the following:

- Select VOCs
- Select SVOCs
- One pesticide
- Select PCBs
- Select metals

Five additional characterization surface soil samples were collected around the 5th Street Disposal Area concrete pad to evaluate the potential for explosives residues (nitroaromatics/nitroamines plus pentaerythritol tetranitrate, nitroglycerin, and perchlorate) based on anecdotal information provided by the facility following the Phase I RI, indicating explosives had been used on the concrete pad.

Additional characterization subsurface soil samples were collected at two locations and analyzed for 1,4-dioxane because of the detection of chlorinated VOCs in subsurface soil during the Phase I RI, per REC guidance (NCDEQ, 2015). Sample locations were selected based on the highest VOC COPC concentrations from Phase I RI groundwater grab samples.

3.4.2 Groundwater Sampling

3.4.2.1 Groundwater Grab Sampling

Groundwater grab samples were collected to determine the vertical and horizontal extent of TCL VOCs. Groundwater grab samples were collected using a DPT rig and a 4-foot retractable stainless steel screen. The samples were collected by advancing the retractable screen to the prescribed sample depths and retracting the screen cover, resulting in exposure of 4 feet of the screen. Samples collected for VOC analysis utilized the “straw” method. Groundwater grab sampling is summarized in **Table 10**.

2nd Street Disposal Area:

Ten shallow grab groundwater samples were collected and analyzed for TCL VOCs (**Figure 6**, **Table 10**). Shallow groundwater samples were collected from the shallowest 4-foot interval that provided sufficient groundwater for sample collection. The top of the sample interval ranged from 10 to 12 feet bgs.

Four deep grab groundwater samples were collected and analyzed for TCL VOCs (**Figure 6, Table 10**). Deep groundwater samples were collected from 25 to 29 feet bgs.

5th Street Disposal Area:

Twelve shallow grab groundwater samples were collected and analyzed for TCL VOCs (**Figure 7, Table 10**). Shallow groundwater samples were collected from the shallowest 4-foot interval that provided sufficient groundwater for sample collection. The top of the sample interval ranged from 4 to 10 feet bgs.

Five deep groundwater grab samples were collected and analyzed for TCL VOCs (**Figure 7**, **Table 10**). Deep groundwater samples were collected from 25 to 29 feet bgs.

3.4.2.2 Monitoring Well Installation

Five monitoring wells were installed within the 2nd Street Disposal Area (**Figure 6**), and five monitoring wells were installed within the 5th Street Disposal Area (**Figure 7**) to characterize the nature and extent of releases. The well locations described below were selected based on the results of the Phase I RI groundwater sample results and Phase II RI groundwater grab sample results in an effort to establish a monitoring well network upgradient, sidegradient, downgradient, and within the former disposal areas.

A North Carolina-licensed driller conducted drilling and well installation activities in accordance with the North Carolina Well Construction Standards and the applicable SOP (CH2M, 2014b) as detailed below. Monitoring well construction details are summarized in **Table 4**. The well completion diagrams and soil boring logs are included in **Attachment A**.

The monitoring wells were generally constructed as follows:

- Boreholes were created using a 4.25-inch inner diameter hollow-stem auger (HSA) to approximately 28 feet bgs. The drill cuttings were contained in 55-gallon drums for staging and subsequent disposal.
- Upon completion of the borehole, approximately 1 foot of sand filter pack was placed on the bottom of the borehole.
- The monitoring wells were constructed within the HSA casing. Each well was constructed using a 10-foot section of 2-inch inner diameter, 0.010-inch machine slotted Schedule 40 polyvinyl chloride (PVC) screen with a bottom cap from approximately 17 to 27 feet bgs.
- The annular space around the well screens was filled with #1 sand consisting of well-graded; fine- to medium-grained silica sand filter pack (thoroughly washed, round, durable, siliceous, material containing less than 5 percent silt or clay). During placement of the filter pack, the bottom cap of the well screen was suspended above the bottom of the borehole. The well casing and screen remained suspended until placement of the filter pack and transition seal (silica sand and bentonite) was completed and set. The top of the casing had a temporary cap during installation of the annulus materials. The sand filter pack extended to approximately 2 feet above the top of the screened interval. The filter pack was installed in approximately 2-foot lifts to prevent bridging. The HSA casing was moved upward as the annulus was filled. The depth to the top of the sand filter pack was measured periodically using a weighted measuring tape.

- Sodium bentonite pellets were placed above the sand pack to form a seal of approximately 3 feet thick. The bentonite was hydrated with potable water, as necessary. The depth to the top of the bentonite seal was measured periodically using a weighted measuring tape.
- After hydration of the bentonite for at least 30 minutes, the remaining borehole annular space was completed with a cement-bentonite grout seal using a tremie pipe method. The grout seal extend from the top of the bentonite seal to approximately 1 foot bgs. The grout seal consisted of Portland cement conforming to American Society for Testing and Materials (ASTM) C-150, Type 1 and was allowed to cure a minimum of 12 hours before well completion.
- For the four stickup wells, the riser casing was installed approximately 2 feet above the ground surface inside a lockable, steel protective stickup cover pad and a 3-foot-diameter by 4-inch-thick concrete pad. A concrete-filled steel bollard was placed at three locations on the concrete pad. A watertight, locking, expansion cap was installed on top of the PVC well casing. Bollards extended at least 2 feet into the ground and 3 feet above the ground. The protective casing and guard posts were painted with a bright yellow epoxy paint to prevent rust. A well identification plate was placed on the monitoring well.
- For the six flush-mount wells, the watertight steel cover was installed flush to the ground surface with a 3-foot-diameter by 4-inch-thick concrete pad. A watertight, locking, expansion cap was installed on top of the PVC well casing. A well identification plate was placed inside the watertight steel cover.
- Drill rigs, drill tools, and associated equipment were steam-cleaned with live steam, using high-pressure low-volume steam cleaning, at the designated staging area before commencing drilling at each well location.

Monitoring wells were developed using a submersible whale pump and surge block. The development water was contained in 55-gallon drums for staging and subsequent disposal. Development pumping and surging was started after the last grout pumped into the well was given 24 hours to cure. Field parameters (conductivity, temperature, pH, DO, ORP, and turbidity) were monitored during development. Wells were developed until a minimum of 3 volumes were removed, groundwater field parameters were stabilized, and turbidity was reduced to the maximum practicable extent.

Following the completion of monitoring well installation, groundwater elevations within the monitoring wells were measured to define the groundwater flow patterns. The groundwater potentiometric map is shown on **Figure 9**, and the water level data is shown on **Table 6**.

3.4.2.3 Monitoring Well Groundwater Sampling

Following completion of monitoring well installation and development activities as well as the collection of groundwater elevations, groundwater samples were collected using a peristaltic pump and following low-flow sampling protocol from the new and existing monitoring wells to characterize the nature and extent of releases. Samples collected for VOC analysis utilized the “straw” method. Before sampling, the pump intake was positioned at the midpoint of the screened interval (approximately 22 feet bgs for the groundwater monitoring wells except TR-5TH-MW02, which was approximately 17 feet bgs). Groundwater was extracted at a low rate (between 0.2 and 0.5 L/min) while pH, specific conductance, DO, ORP, turbidity, and temperature were measure periodically until the parameters stabilized. Hach field test kits were used to analyze for ferrous iron and DO at the time of sample collection. The water-level indicator probes and cable were decontaminated, and the decontamination fluids and purge water were contained in 55-gallon drums for staging and subsequent disposal. Water quality parameters at the time of the sample collection are presented in **Table 5**.

2nd Street Disposal Area:

Five groundwater samples were collected (**Figure 6**) for analysis as summarized in **Table 9** based on the exceedances observed during the Phase I RI and Phase II groundwater grab sampling. Analysis included the following:

- Select VOCs
- Select SVOCs
- Explosives residues (because of the discovery of MPPEH)
- Select metals
- Wet chemistry parameters

Additional characterization groundwater samples were collected at two locations and analyzed for 1,4-dioxane because of the detection of chlorinated VOCs in groundwater during the Phase I RI, per REC guidance (NCDEQ, 2015). Sample locations were based on Phase I RI VOC results and biased towards areas with the highest detections of chlorinated VOCs.

5th Street Disposal Area:

Six groundwater samples were collected (**Figure 7**) for analysis summarized in **Table 9** based on the exceedances observed during the Phase I RI and Phase II groundwater grab sampling. Analysis included the following:

- Select VOCs
- Select SVOCs
- Select metals
- Wet chemistry parameters

Additional characterization groundwater samples were collected at two locations and analyzed for 1,4-dioxane because of the detection of chlorinated VOCs in groundwater during the Phase I RI, per REC guidance (NCDEQ, 2015). Sample locations were based on Phase I RI VOC results and biased towards areas with the highest detections of chlorinated VOCs.

3.4.3 Investigation-Derived Waste Management

Phase II RI IDW consisting of soil cuttings from the monitoring well installation, purged/excess groundwater from monitoring well development and sampling, and decontamination fluids was placed in 55-gallon drums. As required by the disposal facility, the contents of the drums were sampled for VOCs, SVOCs, metals, herbicides, and pesticides using the toxicity characteristic leaching procedure method, and ignitability and corrosivity. A total of 20 solid and 27 aqueous 55-gallon drums were transported as nonhazardous waste to a permitted disposal facility (Clearfield MMG, Inc., Chesapeake, Virginia). Personal protective equipment and disposable sampling equipment were placed in black, non-translucent garbage bags and disposed of in an onsite dumpster at the HPDTA Recycling Center.

3.4.4 Surveying

Following completion of the post-RA groundwater sampling, a North Carolina-registered professional land surveyor completed a topographic survey of the site to capture the post-RA site conditions, including the locations of the groundwater grab samples and the site monitoring wells (**Attachment C**). The horizontal and vertical datums for the coordinates are the North American Datum of 1983, North Carolina State Plane, U.S. Survey Feet and the North American Vertical Datum of 1988, U.S. Survey Feet, respectively.

3.5 Deviations from the Work Plans

The investigations were conducted in accordance with the work plans, with limited exceptions. In the case of variation between a work plan and associated addendum (that is, Phase I RI work plan/Phase I RI

work plan addendum; Phase II RI work plan/Phase II RI work plan addendum), content of the addendum superseded content of the original plan.

Variations from the Phase I RI work plan/Phase I RI work plan addendum (CH2M 2013a, 2013b) include the following:

- Background surface soil samples collected from 6 to 12 inches bgs instead of 0 to 6 inches bgs. The variation from the work plan was to comply with REC guidance (NCDEQ, 2015), which requires samples be collected below the topsoil level (that is, from 6 to 12 inches bgs).
- One surface/subsurface background soil sample was collected and one background monitoring well was installed approximately 235 feet downgradient of the 2nd Street Disposal Area (HPDTA-BG-MW02/SS02/SB02); although downgradient background locations are not typical, this location was believed to be outside the area of impact from 2nd Street Disposal Area and selected to verify the groundwater flow pattern (**Figure 9**).
- One test pit, Test Pit 60, was excavated below the water table based on evidence from the facility that drums were buried at that specific location (**Figure 6**).
- Subsurface soil samples were collected from seven locations within the 2nd Street Disposal Area and six locations within the 5th Street Disposal Area (**Figure 6** and **Figure 7**). The total number of subsurface soil samples was the same as the work plan; however, the number of samples per disposal area was reversed based on the results of the geophysical survey and test pitting, which identified a larger waste/debris area at the 2nd Street Disposal Area.
- Groundwater grab samples were collected from three locations at the 2nd Street Disposal Area and four locations at the 5th Street Disposal Area to provide more spatial coverage of the areas where monitoring wells were not installed (**Figure 6** and **Figure 7**).

Variations from the Phase II RI work plan/Phase II RI work plan addendum (CH2M 2014b, 2015d) include the following:

- Similar to the Phase I RI, background surface soil samples collected from 6 to 12 inches bgs instead of 0 to 6 inches bgs. The variation from the work plan was to comply with REC guidance (NCDEQ, 2015), which requires samples be collected below the topsoil level (that is, from 6 to 12 inches bgs).
- Background soil samples were collected as discrete samples instead of composite samples. This is consistent with the Phase I WP addendum.
- As discussed in **Section 3.1**, dibenzofuran was included in the list of PAHs for background sample analysis. However, because dibenzofuran is not a PAH, a dibenzofuran background value was not established, and the sample results were not used to evaluate site data.
- Shallow groundwater grab samples were collected at the most shallow 4-foot interval that produced sufficient groundwater to collect a sample. The Phase II RI work plan called for collecting the samples at 0 to 4 feet bgs rather than 0 to 4 feet below the water table.
- The monitoring well screen lengths were 10 feet instead of 20 feet to refine characterization of the depth of contamination identified during the Phase I RI.
- Soil cores to facilitate the logging of subsurface geology were not collected during monitoring well installation; however, subsurface soil geology was logged at all of the groundwater grab sample locations and provides adequate spatial coverage of the site.

3.6 Quality Assurance and Quality Control

Quality assurance (QA) and QC samples were collected in accordance with the work plans (CH2M, 2013a, 2014b), Navy, and CH2M protocols. Field QA/QC samples were collected at the following frequency:

- Trip blank – one per cooler with VOC samples sent to the laboratory to document contamination attributable to shipping and field handling procedures
- Duplicate samples – one per ten samples of similar matrix to assess precision of the field sampling process
- Equipment blank – one per day when equipment was decontaminated or one per lot for disposable equipment using ASTM Type II water to monitor the effectiveness of the decontamination process
- Temperature blank – one per cooler containing samples requiring preservation at approximately 4 degrees Celsius (°C) to verify the temperature of the samples contained in the cooler; all sample coolers arrived to the laboratory within appropriate temperature conditions

Laboratory QA/QC was performed in accordance with the wok plans (CH2M, 2013a, 2014b) and the laboratories Quality Control Plan. **Attachment D** contains the Laboratory reports. Examples of laboratory QA/QC samples include the following:

- Method blank – One per twenty samples of similar matrix (or for each analytical batch, whichever was more frequent) to monitor laboratory performance and check for contamination introduced during the preparation and analytical procedures
- Laboratory control samples – one per preparation and analytical batch to evaluate precision and accuracy of the analytical method
- Interference check samples – for inductively coupled plasma analysis only to verify background and inter-element correction factors
- Internal standards – added after preparation or extraction of a sample to assess precision and accuracy of the analytical method
- Dilution test (for metals analysis) – used to determine if a chemical or physical interference effect (that is, a matrix interferent) is suspected
- Post-spike (for metals analysis) – used to determine if a matrix effect is suspected
- Surrogates – surrogate spike recoveries are used to assess accuracy of laboratory methods and matrix interferences

The field quality manager (FQM) conducted and documented routine field inspections and observations to ensure compliance. In addition to ensuring all components of the fieldwork were performed in accordance with the project plans, applicable subcontractor scopes of work, and applicable regulations, the FQM inspected material and equipment as they arrived onsite to ensure compliance with project plans and specifications, ensured testing was performed in accordance with the QAPP, inspected the IDW staging area, and documented the completion of daily inspections of all heavy equipment (for example, drill rig and skid steer) and sampling equipment (for example, peristaltic pump, water quality meter, submersible pump, PID, and GPS) before beginning work each day. Detailed records of subcontractor activities were maintained in the field logbooks and other supporting forms of documentation as the work dictated.

Data quality concerns were identified and summarized in the RAP Addendum (CH2M, 2015c) associated with VOC analysis performed by the analytical laboratory contracted under the Phase I WP QAPP, RAP

QAPP, and Phase II WP QAPP (CH2M, 2013a, 2014b, 2014c). As a result, there was uncertainty with the detected constituents and reported concentrations of VOCs in soil and groundwater at TRDA.

To address the uncertainty at the 2nd Street Disposal Area, confirmation soil samples collected during the waste and soil RA were analyzed for TCL VOCs rather than the select VOCs identified in the RAP QAPP (CH2M, 2014c). Confirmation soil sampling during the waste and soil RA at the 5th Street Disposal Area was completed before identifying the data quality concerns. To address the uncertainty, the soil VOCs data were reprocessed and initially reported in the Remedial Action Construction Completion/ Remedial Action Completion Report (CH2M, 2016b). Tables contained within this report reflect the reprocessed data, and the laboratory reports are contained in **Attachment D**. A new analytical laboratory was procured for subsequent sample analysis (CH2M, 2015d).

SECTION 4

Geology/Hydrogeology

4.1 Site Geology

Site-specific geological information is available from boring logs from soil sample borings, groundwater grab sample borings, and monitoring wells. The soil borings were collected to depths of up to 40 feet bgs at the 2nd Street Disposal Area and 32 feet bgs at the 5th Street Disposal Area from within the unconfined surficial aquifer. Soil boring logs are provided in **Attachment A**. **Figure 10** shows the location of the two geological cross-sections depicted on **Figure 11**.

During the Phase I RI, the vadose zone was observed to consist primarily of fine- to medium-grained silty sand at both disposal areas, with variable amounts of clay observed at the 5th Street Disposal Area. Following the RA excavations, both disposal areas were backfilled from an onsite borrow source. As a result, during the Phase II RI, the vadose zone was observed to consist primarily of general fill and clay. In the 2nd Street Disposal Area, the saturated zone soil consists primarily of clay (to depths of approximately 12 to 16 feet bgs) underlain by fine- to coarse-grained silty sand. In the 5th Street Disposal Area, the saturated zone soil consists primarily of clay with silt and fine- to medium-grained sands (to depths of approximately 10 to 12 feet bgs) underlain by fine- to coarse-grained silty sand. During the Phase I RI, a clay layer was encountered at approximately 29 feet bgs; however, the clay layer was not encountered in all soil borings collected during the RI and is not continuous across the site.

4.2 Site Hydrogeology

Site-specific hydrogeologic information was derived from 15 monitoring wells screened in the unconfined surficial aquifer, consisting of 5 monitoring wells at the 2nd Street Disposal Area (TR-2ND-MW03 through TR-2ND-MW07), 6 monitoring wells at the 5th Street Disposal Area (TR-5TH-MW02 through TR-5TH-MW07), and 4 background monitoring wells (HPDTA-BG-MW01 through HPDTA-BG-MW04). Water table elevations ranged from 0.85 to 4.24 feet (**Table 6**). Groundwater in the surficial aquifer appears to flow to the north towards the Perquimans River (**Figure 9**).

Tidal fluctuations in the Perquimans River are expected to have minimal impact on the groundwater levels based on the relative proximity of the site to the Perquimans River, which has minimal (less than 0.5 foot) fluctuations in tide. Recorded water levels have varied during soil sampling, well installation, and excavation activities. The variation is most likely a result of the clay content in the soil slowing down groundwater seepage within the upper portions of the groundwater table, making it difficult to accurately determine the groundwater elevation before measuring the elevations from the site monitoring wells.

Horizontal hydraulic gradients were calculated between monitoring wells TR-2ND-MW03 and TR-2ND-MW07 (0.0008 foot per foot [ft/ft]), TR-2ND-MW04 and TR-2ND-MW05 (0.0010 ft/ft), TR-5TH-MW03 and TR-5TH-MW05 (0.0012 ft/ft), and HPDTA-BG-MW01 and TR-5TH-MW06 (0.0002 ft/ft) (**Table 12**). As shown on **Figure 9**, these monitoring well pairs are located approximately parallel to the direction of groundwater flow. The geometric mean hydraulic gradient for the 2nd Street Disposal Area and 5th Street Disposal Area are 0.0009 ft/ft and 0.0005 ft/ft, respectively (**Table 12**).

The general soil type was used to approximate the hydraulic conductivity for the disposal areas. Based on predominately silty sand being present in each disposal area the estimated hydraulic conductivity ranges from 1.2 to 4 feet per day (ft/day) with a geometric mean of 0.22 ft/day (**Table 12**).

Assuming an effective porosity of 0.35 for this material, seepage velocities were calculated based on the geometric mean hydraulic gradients and hydraulic conductivities for each disposal area. The seepage velocities for the 2nd Street Disposal Area and 5th Street Disposal Area are 0.006 ft/day and 0.003 ft/day, respectively (**Table 12**).

SECTION 5

Nature and Extent of Contamination

This section presents an evaluation of the nature and extent of contamination at TRDA, in consideration of the data collected to date and current site conditions. The analytical results for all of the samples discussed in **Section 3** are provided in **Attachment B**. However, as indicated in **Section 3.3**, an RA was conducted within the RI phase and resulted in removing waste and contaminated soil at both the 2nd Street Disposal Area and 5th Street Disposal Area. Therefore, this section focuses on site conditions following the RA. Data from soil sample locations that were removed during the RA are excluded from the following tables, figures, and evaluation. Because the majority of groundwater samples were collected at a depth interval below the bottom of the RA excavation, all groundwater data are included within this section.

An explanation of how the data is evaluated is provided, followed by a separate summary for each of the disposal areas, then an overall summary of nature and extent of contamination. The disposal area summaries are organized by media (soil then groundwater). Within each media summary, the following information is presented: a summary of detected constituents, a summary and evaluation of constituents that exceed data evaluation criterion, identification of chemicals of concern (COCs) (if applicable), and a discussion of the nature and extent of the COCs (if applicable).

5.1 Data Evaluation

For the evaluation of data, soil results were compared to background values, protection of groundwater preliminary soil remediation goals (PSRGs), and/or residential health-based PSRGs, as applicable, and available at the time of this report. Groundwater results were compared to the current regulatory standard at the time of this report, which are either the North Carolina Administrative Code 15A-2L Standard (NC2LGW) or the North Carolina Groundwater-Interim Maximum Allowable Concentrations (NC GW-IMAC). No criteria are available for 1,2,3-trichlorobenzene and the explosives residues; therefore, they have been requested from NCDEQ. An addendum to the RI will be provided when screening values are provided.

Background data were collected for metals (TAL metals and hexavalent chromium) and PAHs only; therefore, background values are not applicable to other constituents. The protection of groundwater PSRGs is only applicable for constituents in soil that were also detected in groundwater at concentrations exceeding regulatory criteria. This exception is allowed because of the age of the disposal areas (more than 20 years ago) according to REC guidance (NCDEQ, 2015). When a criterion does not apply, it is noted in the data tables as not applicable.

Background values used in the evaluation data are the maximum detected background concentration for each constituent. Before using the maximum concentration, a qualitative evaluation of the data was conducted and did not identify any outliers. Summaries of soil and groundwater background data, including the minim and maximum detected concentrations, are presented in **Table 13** and **Table 14**, respectively. PAHs were not detected in any of the background samples; therefore, they are excluded from the tables.

In evaluating soil, a chemical is considered to be potential concerns if it exceeds both its background value (if applicable) and either the protection of groundwater PSRG (if applicable) or the health-based PSRG. In evaluating groundwater, a chemical is considered to be a potential concern if it exceeds both its background value (if applicable) and regulatory criterion. Additional factors in determining the list of COCs include consideration of common laboratory contaminants, duplicate sample results, and averaging in accordance with REC guidance (NCDEQ, 2015), as described in the following subsections.

5.2 2nd Street Disposal Area

5.2.1 Extent of Waste

RA activities completed in November 2015 removed approximately 3,905 tons of waste and impacted soil, which accounted for approximately 0.7 acre and ranged in depth from surficial to approximately 10 feet bgs. The waste consisted of both metallic and non-metallic materials, including metal pipes, scrap metal, bottles, bricks, logs, and drum carcasses. The waste and soil were characterized and determined to be nonhazardous. A total of 607 MPPEH items were found co-mingled with the waste; the most common items consisted of 3.5-inch M29 practice rockets, 5-inch folding fin aerial rockets (fins only), 40-mm expended cartridge cases, expended smoke hand grenades, and 75-mm expended recoilless cartridge cases. The items were inspected and documented as “material documented as safe” and recycled offsite. Following the excavation, visible inspection, a geophysical survey, and confirmation sampling were used to verify the RA met its objectives. As a result of the RA, waste is no longer present at 2nd Street Disposal Area, as documented in the RA Report (CH2M, 2016b).

5.2.2 Soil

All of the 2nd Street Disposal Area surface and subsurface soil sample analytical results are compiled in **Attachment B**. Soil sample locations remaining after the RA consist of one surface soil sample location (TR-2ND-SS05) and several subsurface soil sample locations (one 2012 subsurface soil sample [2ND-4], one Phase I RI subsurface soil sample [TR-2ND-SB07], and the RA floor and wall confirmation samples) (**Table 15, Figure 12**). Considering only those sample locations, four VOCs, five SVOCs, two PCBs, and 21 metals were detected in one or more sample (**Table 15**). With the exception of two metals (arsenic and cobalt), no chemicals were detected at concentrations that exceeded both their background value (if applicable), and either the protection of groundwater PSRG (if applicable) or the residential health-based PSRG (**Table 15, Figure 12**). As discussed in the RA Report (CH2M, 2016b):

- Arsenic: Several post-RA confirmation samples exceeded the human health risk-based PSRG (0.68 milligram per kilogram [mg/kg]) but were below the protection of groundwater PSRG (5.8 mg/kg). All arsenic results (maximum detection 5.49 mg/kg) were similar in magnitude to the background value (3.74 mg/kg) and detected at similar concentrations across the site (minimum 0.86 mg/kg; maximum 5.49 mg/kg).
- Cobalt: Several post-RA confirmation samples exceeded the protection of groundwater PSRG (0.9 mg/kg) but were below the human health risk-based PSRG (4.6 mg/kg). One cobalt concentration (4.78 mg/kg) slightly exceeded the human health risk-based PSRG (4.6 mg/kg) but was similar in magnitude to the background value (4.64 mg/kg). In accordance with Appendix E, Section E.3 of the REC guidance (NCDEQ, 2015), cobalt data from samples collected within the 10,000-square-foot (0.23-acre) area surrounding the location of the exceedance were averaged to demonstrate attainment of the human health risk-based PSRG for cobalt. Nondetects were included at the value of the reporting limit. The average concentration (4.38 mg/kg) was below the human health risk-based PSRG.

Therefore, there is no remaining contamination in soil at the 2nd Street Disposal Area.

5.2.3 Groundwater

The 2nd Street Disposal Area groundwater data are compiled in **Attachment B**. Fourteen VOCs, one SVOC, four explosives residues, and seventeen metals were detected (**Table 16**). Of those detected, two VOCs (tetrachloroethene [PCE] and vinyl chloride), one SVOC (bis(2-ethylhexyl)phthalate), and two metals (cobalt and manganese) were detected in groundwater at concentrations exceeding their respective regulatory standard and background value (if applicable) (**Figure 13**).

Bis(2-ethylhexyl)phthalate is a common laboratory contaminant that was only detected at concentrations exceeding the regulatory criteria in two grab samples. Upon review, QC concerns were

identified with the associated laboratory deliverable that indicate there is uncertainty with the data, as the calibration criteria were not met. Considering this QC deficiency, the associated sample detections should be considered as estimated. Bis(2-ethylhexyl)phthalate was not detected at concentrations exceeding the regulatory criteria in subsequent samples collected from monitoring wells, and no data QC deficiencies were identified for those samples. Therefore, considering the fact that bis(2-ethylhexyl) phthalate is a common laboratory contaminant, there are data quality concerns with the grab samples, and the chemical was not detected in subsequent samples, bis(2-ethylhexyl)phthalate should not be considered as a COC.

The COCs for groundwater, their background levels, and their regulatory criteria are summarized in **Table 17**. Chemicals in groundwater reflective of potential impacts from the 2nd Street Disposal Area historical activities were VOCs and metals.

The primary VOC COC is a chlorinated aliphatic VOC (PCE) that was detected throughout, sidegradient to the southeast, and just downgradient of the former waste disposal area, primarily at the deeper sample intervals, at concentrations ranging from 0.348 J to 3.41 micrograms per liter (µg/L). The plume where a COC concentration exceeds its regulatory criteria extends over a 0.7-acre area (**Figure 11** and **Figure 14**).The highest concentration of PCE (3.41 µg/L) was measured in the southwestern and northern portions of the site (within and immediately downgradient of the former disposal area).

There is limited uncertainty with the horizontal and vertical extents of PCE, based on the detections at concentrations exceeding the regulatory standard(s) at the perimeter sample locations and at the deepest interval sampled (25 to 29 feet bgs). However, because of the low magnitude of detection, it is not expected that the extent of PCE is significantly greater than currently delineated.

Vinyl chloride was only detected at a low concentration (0.18 J µg/L) in comparison to its regulatory standard of 0.03 µg/L, in one sample (2ND-3), which was collected in 2012 within the disposal area; it was not detected in any of the Phase I (2013) or Phase II (2016) RI groundwater samples.

The metal COCs (cobalt and/or manganese) were detected sporadically across and downgradient of the former waste disposal area, with the highest concentrations in the central portion (**Figure 15**). The highest detected cobalt concentration (7.72 µg/L) only slightly exceeds its background value (6.75 µg/L). The highest detected manganese concentration (1,080 µg/L) is approximately three times its background value (367 µg/L).

5.3 5th Street Disposal Area

5.3.1 Extent of Waste

RA activities completed in November 2015 removed approximately 4,970 tons of waste and impacted soil, which accounted for approximately 0.9 acre and ranged in depth from surficial to approximately 8 feet bgs. The waste consisted of both metallic and non-metallic materials, including metal pipes, scrap metal, bottles, bricks, logs, tires, compressed gas cylinders, safes, and one motor from a 3.5-inch M29 practice rocket. The waste and soil were characterized and determined to be nonhazardous, with one exception: approximately 0.16 ton of soil had total PCB concentrations exceeding regulatory criteria, requiring management in accordance with Toxic Substances Control Act and the PCB regulations of 40 Code of Federal Regulations 761. Following the excavation, visible inspection, a geophysical survey, and confirmation sampling were used to verify the RA met its objectives. As a result of the RA, waste is no longer present at 5th Street Disposal Area, as documented in the RA Report (CH2M, 2016b).

5.3.2 Soil

All of the 5th Street Disposal Area surface and subsurface soil sample analytical results are compiled in **Attachment B**. Soil sample locations remaining after the RA consist of six surface soil sample locations (TR-5TH-SS05, TR-5TH-SS14, and TR-5TH-SS18 to TR-5TH-SS21) and several subsurface soil sample locations (one 2012 subsurface soil sample [5TH-2], one, Phase I RI subsurface soil sample [TR-5TH-

SB06], and most RA floor and wall confirmation samples) (**Table 18, Figure 16**). Considering only those sample locations, 8 VOCs, 16 SVOCs, 2 PCBs (Aroclor-1254 and Aroclor-1260), and 21 metals were detected in the sample (**Table 18**). The majority did not exceed both the background value (if applicable) and either the protection of groundwater PSRG (if applicable) or the health-based PSRG. However, one or more of five SVOCs (benzo(a)anthracene, benzo(a)pyrene benzo(b)fluorantene, dibenz(a,h)anthracene, and indeno(1,2,3-cd)pyrene) exceeded both the background value and the health-based PSRG at three sample locations (**Figure 16**). The sample collected from one of the sample locations (TR-5TH-SS05) was a composite sample that was followed by grab delineation samples (TR-5TH-SS18 to SS21). Therefore, the composite location is excluded from consideration, replaced by the grab sample locations.

In accordance with Appendix E, Section E.3 of the REC guidance (NCDEQ, 2015), data collected from samples located within a 0.25-acre sector may be averaged for unrestricted use levels:

- Two of the sample locations with results that exceed criteria are south of Flat Run Road (TR-5TH-SB06 and TR-5TH-SS21) Considering all of the grab samples collected south of Flat Run Road (TR-5TH-SS18 to SS21 and TR-5TH-SB06) and evaluating nondetect results at half of their reporting limit:
  - The average concentration of benzo(a)anthracene, benzo(b)fluoranthene, dibenz(a,h)anthracene, and indeno(1,2,3-cd)pyrene are less than or equal to their health-based PSRGs as follows:
    - Benzo(a)anthracene: average of 0.05 mg/kg is less than health-based PSRG of 0.16 mg/kg.
    - Benzo(b)fluoranthene; average of 0.04 mg/kg is less than health-based PSRG of 0.16 mg/kg.
    - Dibenz(a,h)anthracene: the average concentration of 0.016 mg/kg is equal to the health-based PSRG of 0.016 mg/kg.
    - Indeno(1,2,3-cd)pyrene: average of 0.03 mg/kg is less than health-based PSRG of 0.16 mg/kg.
  - The average concentrations of benzo(a)pyrene is similar to its health-based PSRG, infrequently detected, and biased high by reporting limits as follows:
    - Benzo(a)pyrene: the average concentration is 0.03 mg/kg, in comparison to the health-based PSRG of 0.016 mg/kg; however, the chemical was detected in only one of five discrete samples, and the reporting limits of the four nondetect samples (0.031 to 0.037 mg/kg) are greater than the health-based PSRG, driving the average to above the PSRG.
- One of the sample locations is on the western boundary of the RA (TR-5TH-CSW11); however, only one chemical (benzo(a)pyrene) slightly exceeded (0.018 J mg/kg) the health-based PSRG (0.016 mg/kg) and:
  - The average concentration of benzo(a)pyrene in the wall sample collected from that sample and the locations adjacent to it (TR-5TH-CSW12) (0.016 mg/kg) is equal to the health-based PSRG.
  - In the duplicate sample location collected at TR-5TH-CSW11, benzo(a)pyrene was not detected.

In addition, one metal (arsenic) exceed both the background value and health-based PSRG at four sample locations (**Figure 16**). As discussed in the RA Report (CH2M, 2016b):

- Arsenic: Several post-RA confirmation samples exceeded the human health risk-based PSRG (0.68 mg/kg) but were below the protection of groundwater PSRG (5.8 mg/kg). All arsenic results (maximum detection of 5.10 mg/kg) were similar in magnitude to the background value (3.74 mg/kg) and detected at similar concentrations across the site (minimum 0.486 J mg/kg; maximum 5.49 mg/kg.

Therefore, there is no remaining contamination in soil at the 5th Street Disposal Area.

5.3.3 Groundwater

The 5th Street Disposal Area groundwater data are compiled in **Attachment B**. Seventeen VOCs, five SVOCs, and eighteen metals were detected (**Table 19**). Seven VOCs (1,2,3-trichlorobenzene, 1,2-dichlorobenzene, 1,4-dichlorobenzene, benzene, methyl tert-butyl ether [MTBE], PCE, and vinyl chloride), one SVOC (bis(2-ethylhexyl)phthalate), and four metals (cobalt, iron, manganese, and vanadium) were detected in groundwater at concentrations exceeding their respective regulatory standard and background value (if applicable) (**Figure 17**).

Bis(2-ethylhexyl)phthalate is a common laboratory contaminant that was only detected at concentrations exceeding the regulatory criteria in three grab samples. Upon review, QC concerns were identified with the associated laboratory deliverable that indicate there is uncertainty with the data, as the calibration criteria were not met. Considering this QC deficiency, the associated sample detections should be considered as estimated. Bis(2-ethylhexyl)phthalate was not detected at concentrations exceeding the regulatory criteria in subsequent samples collected from monitoring wells, and no data QC deficiencies were identified for those samples. Therefore, considering the fact that bis(2-ethylhexyl) phthalate is a common laboratory contaminant, there are data quality concerns with the grab samples, and the chemical was not detected in subsequent samples, bis(2-ethylhexyl)phthalate should not be considered as a COC.

The COCs for groundwater, their background levels, and their regulatory criteria are summarized in **Table 17.** Chemicals in groundwater reflective of potential impacts from the 5th Street Disposal Area historical activities were VOCs and metals.

VOC COCs are classified into three separate categories: chlorinated aliphatic VOCs (tetrachloroethene and vinyl chloride), aromatic chlorobenzenes (1,2,4-trichlorobenzene, 1,2-dichlorobenzene, and 1,4-dichlorobenzene), and fuel compounds (benzene and MTBE), which are depicted on **Figure 11** and **Figure 18.** The plumes are overlapping in the north central portion of the former disposal area and downgradient of it, with the aromatic chlorobenzenes and fuel compounds slightly more downgradient than the chlorinated aliphatic VOCs. A summary is as follows:

- Chlorinated aliphatic VOCs were detected at all sample intervals. One or more of the COCs exceeded its regulatory criterion over a 0.1-acre area. PCE was detected in only one location, at a concentration of 1.92 DB µg/L. Vinyl chloride was detected at multiple locations downgradient of the PCE detection, with concentrations ranging from 1.3 DJ to 13.6 µg/L.
- Aromatic chlorobenzenes were detected at the deeper sample intervals. One or more of the COCs exceeded its regulatory criterion over a 0.2-acre area. Considering the most recent data, concentrations ranged from 0.7 J to 669 XD µg/L.
- Fuel compounds were detected at the deeper sample interval. One or more of the COCs exceeded its regulatory criterion over a 0.1-acre area. MTBE was detected at concentrations ranging from 0.59 J to 552 XD µg/L, while benzene was detected at concentrations ranging from 0.357 DJ to 2.28 DJ µg/L.

The VOC COC (1,2,4-trichlorobenzene, 1,2-dichlorobenzene, 1,4-dichlorobenzene, benzene, and MTBE) concentrations were detected in the central portion and downgradient of the former waste disposal area, primarily in the deep groundwater samples. The highest concentrations were detected in the samples collected from TR-5TH-MW05 and TR-5TH-GW13, which are co-located in the northern portion of the site in the deeper interval sampled (25 to 29 feet bgs) (**Figure 18**). Concentrations of the VOCs significantly drop off to the north (downgradient). At the most downgradient sample location (TR-5TH-GW17), the concentration of 1,4-dichlorobenzene and MTBE slightly exceed their regulatory criteria. There is limited uncertainty with the horizontal and vertical extents of the VOCs based on the detections

at concentrations exceeding the regulatory standard(s) at the most downgradient location and at the deepest interval sampled (25 to 29 feet bgs). In parts of the site, a clay layer is present and would limit downward mobility of VOCs; however, the clay layer is not continuous across the site.

The metals COCs concentrations exceeded regulatory and background criteria at samples collected from five of the monitoring wells (TR-5TH-MW02, TR-5TH-MW03, TR-5TH-MW04, TR-5TH-MW06, and TR-5TH-MW07), which were all within former extent of waste (**Figure 19**). The highest detected cobalt concentration (20.9 µg/L) is approximately three times its background value (6.75 µg/L). The highest detected iron concentration (1,550 µg/L) is approximately two times its background value (629 µg/L). The highest detected manganese concentration (1,330 µg/L) is approximately three times its background value (367 µg/L). The highest detected vanadium concentration (5.28 µg/L) is approximately four times its background value (1.24 µg/L).

TR-5TH-MW02 was installed and initially sampled in 2013, then resampled in 2016 following the RA. Concentrations of VOCs decreased significantly and concentrations of metals generally decreased between the two sampling events, indicating the RA may have positively affected groundwater quality within the extent of waste.

5.3.4 Summary

The nature and extent of releases has been determined as follows:

- **2nd Street Disposal Area:**
  - Soil: Following the RA, there is no remaining contamination in soil.
  - Groundwater:
    - VOC COCs (PCE and vinyl chloride) have been identified in the surficial aquifer. PCE is the most prevalent VOC COC, whereas vinyl chloride was only detected at a low concentration in one sample (2012). PCE was detected at low concentrations exceeding the regulatory standard over an area of 0.7 acre throughout, sidegradient to the southeast, and just downgradient of the former waste disposal area, primarily at the deeper sample intervals. There is limited uncertainty with the horizontal and vertical extents of PCE, based on the detections at concentrations exceeding the regulatory standard(s) at the perimeter sample locations and at the deepest interval sampled. However, because of the low magnitude of detection, it is not expected that the extent of PCE is significantly greater than currently delineated.
    - Metal COCs (cobalt and/or manganese) have been identified in the surficial aquifer, with the highest concentrations in the central portion of the site. Concentrations across the site have the same order of magnitude to background values; therefore, there is uncertainty whether the metal COCs are site related.
- **5th Street Disposal Area**
  - Soil: Following the RA, there is no remaining contamination in soil.
  - Groundwater:
    - VOC COCs (chlorinated aliphatic VOCs, aromatic chlorobenzenes, and fuel compounds) have been identified in the surficial aquifer. Concentrations exceeding regulatory criteria were detected in north-central portion and downgradient of former waste disposal area, covering 0.4 acre, primarily in the deeper sample intervals. The plumes are overlapping, with the aromatic chlorobenzenes and fuel compounds slightly more downgradient than the chlorinated aliphatic VOCs. There is limited uncertainty with the horizontal and vertical extents of the VOCs, based on the detections at concentrations exceeding the regulatory

standard(s) at the perimeter sample locations and at the deepest interval sampled. However, because of the low magnitude of detections at the most downgradient sample location, it is not expected that the extent of VOCs is significantly greater than currently delineated.

- Metal COCs (cobalt, iron, manganese, and vanadium) have been identified in the surficial aquifer, with the highest concentrations in the central portion of the site. Concentrations across the site have the same order of magnitude to background values; therefore, there is uncertainty whether the metal COCs are site related.

Preliminary cleanup levels were developed in consideration of background values and regulatory standards, and are presented in **Table 17**.

SECTION 6

Contaminant Fate and Transport

This section discusses the fate and transport of chemicals identified as COCs (**Table 17**) and potential human health and ecological receptors and risk pathways. No COCs were identified in soil. Chemical groups identified as groundwater COCs include chlorinated VOCs (PCE and vinyl chloride) and metals (cobalt and manganese) at the 2nd Street Disposal Area and aromatic chlorinated VOCs (1,2,4-trichlorobenzene, 1,4-dichlorobenzene, 1-2-dichlorobenzene), chlorinated aliphatic VOCs (PCE and vinyl chloride), fuel compounds (benzene, MTBE) and metals (cobalt, iron, manganese, vanadium) at the 5th Street Disposal Area. Fate and transport characteristics for each group of COCs are described below.

The probable behavior of COCs in groundwater is determined by their physical, chemical, and biological interactions with the environment. The mobility and persistence of the COCs in the environment are two key characteristics in determining probable behavior. Mobility is the potential for a COC to migrate from a site, and persistence is a measure of how long a chemical will remain in the environment. Mobility and persistence depend both on chemical and physical and those of the hydrogeologic unit. One important aspect of understanding the mobility and persistence of COCs (particularly VOCs) is the extent to which natural attenuation is occurring.

While aquifer testing has not been conducted at TRDA, the physical mechanisms of advection and dispersion are recognized as important properties in determining the distribution of COCs. Advection is the transport of dissolved contaminants by the bulk motion of flowing groundwater. It is the primary transport mechanism for dissolved contamination along the hydraulic gradient. Advection controls the rate and direction of contaminant migration. Dispersion is the spreading of dissolved contaminants from the path they would be expected to follow during advection. It results from the spatial variation in aquifer permeability, fluid mixing, and diffusion. Dispersion primarily controls the concentration of the contaminant at any point in the flow system. Within the shallow groundwater system where COCs have been identified at TRDA, advection can be interpreted from the potentiometric surface maps (**Figure 9**), indicating groundwater (and COCs dissolved in groundwater) would be expected to migrate along a flat gradient in a northerly direction.

Sections 6.1 and **6.2** describe the physical and chemical properties related to mobility and persistence of VOCs and metals respectively. **Section 6.3** presents an evaluation of natural attenuation.

6.1 VOCs

Fate and transport of VOCs can be significantly influenced by the potential for volatilization, potential for sorption onto aquifer solids, solubility in water, density, and degradation rates. These fate and transport mechanisms are described below, then these mechanisms are discussed in relation to site-specific classes of COCs.

Volatilization

Volatilization occurs when a compound transfers from the aqueous phase to the gas phase. Measures of a chemical's tendency to volatilize from water include its vapor pressure and Henry's Law Constant (K_h). Compounds with K_h values higher than 10^{-3} atmosphere-cubic meter per mole (atm-m^3/M) are expected to volatilize readily from water to air, whereas those with K_h values lower than 10^{-5} atm-m^3/M are relatively nonvolatile.

Volatilization tends to occur more readily from surface water, sediment, or shallow soil than from deeper soil or groundwater. In groundwater, volatilization can occur only at the air/water interface between the saturated and unsaturated zones, and movement of aqueous-phase contaminants from

bulk groundwater to the interface is largely diffusion-limited. In unsaturated shallow soil, the soil gas pressure generally approximates the ambient air pressure. With depth, the soil gas pressure tends to increase and it becomes more difficult for the gas to escape and equalize with the ambient air pressure. Values of vapor pressure and K_h for the site COCs are presented in **Table 20**.

Sorption

Sorption occurs when a compound adheres to and becomes associated with solid particles in the aquifer. The subsurface materials likely to sorb chemicals typically are clays and organic material, both of which have been observed at TRDA.

The conventional measure of sorption is the distribution coefficient (K_d). The K_d for organic chemicals is the product of the soil organic carbon partition coefficient (K_{oc}) of the chemical and the fraction of organic carbon (f_{oc}) in soil. In general, chemicals with a K_{oc} greater than 10,000 milliliters per gram (mL/g) have high degrees of adsorption and consequentially low mobility, whereas chemicals with a K_{oc} lower than 1,000 mL/g have lower degrees of adsorption and consequentially higher mobility. The K_{oc} values for the site COCs are presented in **Table 20**.

Solubility

Solubility is a measure of the degree to which a constituent will dissolve in water. Highly soluble chemicals are more likely to be leached from soil by precipitation or runoff that infiltrates into the subsurface and less likely to volatilize. The solubilities of site COCs are presented in **Table 20**.

Density

The density of a substance relative to water determines the likelihood of that substance to accumulate at the top or bottom of an aquifer before it dissolves into groundwater. The densities of site COCs are presented in **Table 20**.

Biodegradation

Degradation is the deterioration or destruction of a chemical either biologically (biodegradation) or abiotically through such processes as hydrolysis and photolysis. Biodegradation of chemicals by microbial organisms occurs through metabolic or enzymatic processes. Hydrolysis is the reaction of a chemical with water and photolysis is the result of exposing the chemical to light. The rate of degradation can be expressed as a half-life and is dependent on the existing chemical, biological, and physical conditions of the medium in which the contaminant is located.

6.1.1 Chlorinated Aliphatic VOCs

The chemical and physical properties of the chlorinated aliphatic VOCs identified as COCs at the 2nd Street Disposal Area (PCE) and 5th Street Disposal Area (PCE and vinyl chloride) are summarized below:

- Vapor pressure and K_h values are indicative of moderate to high volatility. However, the volatilization pathway is not significant in groundwater at TRDA because the concentrations of VOCs are relatively low resulting in a relatively low gradient, unfavorable to volatilization.
- High mobility is expected due to low K_{oc} values (less than 10,000 mL/g).
- PCE is moderately soluble in water whereas vinyl chloride is very soluble in water.
- The downward migration of undissolved PCE would be expected (density of 1.6 grams per cubic centimeter) if undissolved PCE were present. However, at TRDA, downward migration of PCE is not likely to be density-driven because nonaqueous phase liquid is not likely present based on the concentrations which are approximately 1 percent of the aqueous solubility. Instead, any vertical migration would be attributed to the vertical hydraulic gradients present near TRDA. Vertical migration of vinyl chloride (which is a daughter breakdown product of other chlorinated ethenes) is

also expected to mimic the overall movement of groundwater, as the vinyl chloride likely only exists in the dissolved phase.

- Chlorinated aliphatic VOCs (such as PCE) typically undergo biodegradation through use as an electron acceptor (reductive dechlorination), and less commonly through co-metabolism. Reductive dechlorination occurs in a series of reactions in which the parent compound is reduced to daughter compounds; each reaction forms a daughter compound with sequentially fewer chlorine atoms. The dominant reductive degradation pathway for PCE is as follows:

  PCE →trichloroethene → cis-1,2-dichloroethene →vinyl chloride → ethene

  This reaction is often limited by the amount of an available carbon source (electron donor) in the groundwater system. Additionally, the rate of reductive dechlorination appears to decrease as the degree of chlorination decreases. Generally, the absence of DO, nitrate, and sulfate coupled with sufficient organic carbon and negative ORP indicate conditions are favorable for reductive dechlorination. The reduced daughter products of PCE (especially vinyl chloride) can also be biodegraded via aerobic degradation pathways. The low concentrations of vinyl chloride detected in groundwater samples provide evidence that reductive dechlorination can occur and that intermediate daughter products (TCE and cis-1,2-dichloroethene) have not accumulated in the groundwater.

6.1.2 Chlorobenzenes

The chemical and physical properties of the aromatic chlorobenzenes identified as COCs at the 5th Street Disposal Area (1,2,4-trichlorobenzene, 1,4-dichlorobenzene, and 1-2-dichlorobenzene) are summarized below:

- Vapor pressure and K_h values are indicative of moderate volatility. Coupled with the relatively low concentrations, the volatilization pathway is not significant.
- The mobility of 1,2,4-trichlorobenzene is likely to be inhibited because of sorption (K_{oc} of 10715 mL/g), while moderate mobility is expected for 1,4-dichlorobenzene and 1,2-dichlorobenzene.
- Chlorobenzenes have low solubility in water (156 milligrams per liter [mg/L] or less).
- The densities of the chlorobenzenes identified as COCs are all greater than that of water; therefore, downward migration would be expected if undissolved chlorobenzene were present. However, at TRDA downward migration of chlorobenzene is not likely to be density-driven because no nonaqueous phase liquid is likely based on the concentrations which are approximately 1 percent of the aqueous solubilities. Instead, any vertical migration would be attributed to the vertical hydraulic gradients present near TRDA.
- Chlorobenzene is readily degraded under aerobic conditions by the common gram negative bacteria, *Pseudomonas***.** DO concentrations and ORP measurements can be used to estimate the potential for aerobic biodegradation. Generally, DO concentrations above 1 mg/L indicate aerobic conditions necessary to facilitate biodegradation of chlorobenzene. The ORP of aerobic degradation is most efficient when ORP is at high, positive levels.

6.1.3 Fuel Compounds

The chemical and physical properties of the fuel compounds identified as COCs at the 5th Street Disposal Area (benzene and MTBE) are summarized below:

- Vapor pressure and K_h values are indicative of moderate to high volatility, but coupled with the low concentrations and subsequent low gradients, the volatilization pathway is not significant.
- High mobility is expected because of low K_{oc} values (less than 10,000 mL/g).

- Benzene is highly solubile in water and MTBE is nearly miscible in water.
- The densities of benzene and MTBE are both similar to water; therefore, downward migration is not expected.
- Petroleum hydrocarbons such as benzene are relatively rapidly degraded through aerobic biodegradation and through a kinetically slower anaerobic mechanism. Generally, DO concentrations above 1 mg/L indicate aerobic conditions necessary to facilitate biodegradation of benzene. The ORP of aerobic degradation is most efficient when ORP is at high, positive levels. The fuel oxygenate MTBE is relatively recalcitrant to biodegradation.

6.2 Metals

Fate and transport of metals is influenced by the solubility, sorption potential, and transformation potential.

Solubility and Sorption

The solubilities of metals are highly dependent on several variable factors, mainly pH and the oxidation state of the metal constituent. The solubility of cations decreases as pH increases. Some cations may complex with oxygen and hydroxide, forming insoluble oxyhydroxides, or phosphate, sulfate, and carbonate, forming insoluble mineral precipitates. Metal sulfide complexes, which form in reducing environments, are extremely insoluble and tend to reduce the total metals concentrations (USEPA, 1979).

The potential for sorption (K_d) for inorganic chemicals is also a complex function of pH, organic content, oxide coatings, and other factors; therefore, K_d is not easily estimated by methods other than site-specific testing. Generally, metal adsorption increases with pH. Inorganics most often sorb to clay minerals, organic matter, and iron and manganese oxyhydroxides. Metals may be sorbed on the surface of the soil or fixed to the interior of soil, where they are unavailable for release to water. After available sorption sites are filled, most metals are incorporated into the structures of major mineral precipitates, as coprecipitates.

Transformation

Transformation occurs when the valence state of metals is increased (oxidation) or decreased (reduction). It can be caused by changes in Eh (oxidation potential) and/or pH and by microbial or nonmicrobial (abiotic) processes. Transformation may have a significant effect on the mobility of a metal, either increasing or decreasing it.

6.2.1 Iron and Manganese

The solid forms of iron (iron hydroxides) and manganese (manganese oxides) are usually present in the natural soil matrix. If sufficient amounts of oxygen and nitrate are not present in the subsurface, iron hydroxides and manganese oxides can be used during reductive dechlorination as electron acceptors and reductively dissolved into soluble forms. Sulfides present in groundwater can also reductively dissolve iron hydroxides.

Geochemical indicators for TRDA are generally indicative of aerobic groundwater conditions, which limits the mobility of iron and manganese. Iron in the reduced form (ferrous) is relatively soluble; whereas, the oxidized species (ferric) is insoluble. Therefore, variations in the redox conditions of the aquifer result in changes to the mobility of iron and manganese.

6.2.2 Cobalt

Cobalt forms insoluble metal sulfides in anaerobic environments and tends to sorb and be transported in water primarily with suspended colloidal particles (ERG, 2003). The concentrations of cobalt are isolated and sporadic and are likely the result of localized suspended colloidal particles.

6.2.3 Vanadium

In oxidizing environments, vanadium primarily exist as an oxyanion (hard anions that contain oxygen) and is relatively mobile. However, it can be adsorbed by clays, iron hydroxides, aluminum hydroxides, manganese compounds, and organic material at acidic and neutral pHs. Vanadium is a naturally occurring metal usually present in the natural soil matrix. In the slightly aerobic conditions at TRDA, isolated estimated detections of vanadium are within an order of magnitude of background values and may be present based on variability of soil and aquifer solid composition.

6.3 Natural Attenuation Evaluation

Natural attenuation occurs through physical dispersion, but also through biotic and abiotic process that can change the chemical composition of compounds. While natural attenuation for metals can occur based on natural changes in pH and redox conditions, the biodegradation of organic compounds is most commonly considered natural attenuation process. The following evaluation focuses on conditions suitable for the aerobic biodegradation of petroleum hydrocarbons such as benzene and chlorobenzenes, as well as the anaerobic biodegradation of chlorinated aliphatic VOCs. The parameters used in the natural attenuation evaluation are summarized in **Table 21**.

6.3.1 Dissolved Oxygen

DO is the most thermodynamically favored electron acceptor used by microbes for the aerobic biodegradation of organic carbon. Generally, DO concentrations above 1 mg/L indicate aerobic conditions necessary to facilitate biodegradation of benzene and chlorobenzene. In contrast, anaerobic reductive dechlorination ideally proceeds when DO is less than 0.5 mg/L, but can still occur at DO levels below 5 mg/L.

At the 2nd Street Disposal Area, DO concentrations ranged from 0.98 to 8.19 mg/L (**Table 21**). The lower DO concentrations (less than 1.15 mg/L) observed along the southern edge of the investigation area are indicative of mildly favorable conditions for reductive dechlorination. At the 5th Street Disposal Area, DO concentrations ranged from 1.58 to 4.73 mg/L (**Table 21**). The lowest concentration was measured at TR-5TH-MW02. Generally, it appears that DO variability across the site is a function of infiltration which allows for rainwater containing relatively elevated levels of DO to raise DO levels in localized areas. Aerobic biodegradation of benzene and chlorobenzene would be favorable in the elevated DO areas.

6.3.2 Oxidation-reduction Potential

The ORP of groundwater is a measure of electron activity and is an indicator of the relative tendency of a solution to accept or transfer electrons. Reductive dechlorination is most efficient in the ORP range corresponding to sulfate reduction and methanogenesis (less than -100 millivolts [mV]) whereas aerobic degradation is most favorable in ORP ranges above 100 mV.

At the 2nd Street Disposal Area, ORP values ranged from 80.4 to 153.6 mV (**Table 21**). At the 5th Street Disposal Area, ORP values ranged from 70.1 to 133.8 mV (**Table 21**). These results are indicative of mildly oxidizing conditions and are not favorable for reductive dechlorination but somewhat favorable for aerobic degradation.

6.3.3 Nitrate/Nitrite

After DO has been depleted, nitrate may be used as an electron acceptor during anaerobic biodegradation of organic carbon via denitrification. In this process, nitrate is reduced and nitrite is produced. The nitrite/nitrate ratio is another indication of the overall redox characteristic of the site with the presence of nitrate suggesting aerobic conditions.

At the 2nd Street Disposal Area, nitrate results ranged from 89.6 to 253 µg/L (**Table 21**). Nitrate was not detected at two monitoring wells and nitrite was not detected in all of the monitoring wells. At the 5th Street Disposal Area, nitrate was detected at two monitoring wells at concentrations of 56.6 and

339 µg/L, and nitrite was only detected in one monitoring well at a concentration of 89.9 µg/L (**Table 21**). These results indicate nitrate reduction does not appear to be a significant electron acceptor process at the 2nd Street Disposal Area and 5th Street Disposal Area, again supporting the mildly oxidizing conditions at the site.

6.3.4 Ferric Iron/Ferrous Iron

In some cases, ferric iron (iron III) is used as an electron acceptor during anaerobic degradation. During this process ("iron reduction"), ferric iron is reduced to iron (II) or ferrous iron. As a result, measurable concentrations of ferrous iron are an indicator of iron reduction. In general, ferrous iron concentrations greater than 1 mg/L are considered to be an indicator of iron reduction.

At the 2nd Street Disposal Area and 5th Street Disposal Area, dissolved iron concentrations were below 1 mg/L (**Table 21**). While overall the total iron content at the site is below 1 mg/L, the absence of dissolved iron suggests iron reduction is not a significant electron acceptor process and that overall, the aerobic redox conditions at the site do not favor formation of ferrous iron.

6.3.5 Sulfate/Sulfide

After DO and nitrate have been depleted, sulfate may be used as the electron acceptor in anaerobic degradation. This process is termed "sulfate reduction" and results in the production of sulfide. Sulfide concentrations generally increase within the aquifer when sulfate reduction is occurring. However, in some instances, particularly in areas of high iron concentrations, sulfide minerals, when generated, react with iron to form iron sulfide minerals and precipitate out and are therefore, not detected in groundwater. The presence of sulfides are strong indicators of highly anaerobic conditions.

At the 2nd Street Disposal Area, sulfate concentrations ranged from 23,900 to 97,400 µg/L, while sulfide was undetected at all monitoring wells (**Table 21**). Similarly, at the 5th Street Disposal Area, sulfate concentrations ranged from 38,000 to 158,000 µg/L, while sulfide was undetected at all monitoring wells (**Table 21**). These results indicate sulfate reduction does not appear to be a significant electron acceptor process at the 2nd Street Disposal Area and 5th Street Disposal Area and confirms the aerobic redox conditions across the site.

6.3.6 Methane

Methanogenesis is generally an indicator that reducing conditions are conducive to anaerobic degradation of chlorinated VOCs; however, reductive dechlorination can occur under conditions that are not methanogenic.

At the 2nd Street Disposal Area, methane was measured at concentrations ranging from 1.13 to 243 µg/L (**Table 21**). At the 5th Street Disposal Area, methane was measured at concentrations ranging from 1.07 to 253 µg/L (Table 21). Overall, these results indicate methane is present at relatively low levels, further confirming the mildly aerobic conditions across the site; however, limited methane generation appears to occur at the site at least under some conditions.

6.3.7 Total Organic Carbon

Organic carbon is used as an electron donor (or may produce hydrogen, which can serve as the electron donor) in the reductive dechlorination process. The presence of TOC at concentrations greater than 20 mg/L indicates ideal conditions for reductive dechlorination.

At the 2nd Street Disposal Area, the maximum TOC measured was 3.35 mg/L (**Table 21**). At the 5th Street Disposal Area, the maximum TOC measured was 3.13 mg/L (**Table 21**). These results are not favorable for reductive dechlorination, but do suggest a possible source for the low methane concentrations mentioned above.

6.3.8 Temperature

Groundwater temperature directly affects the solubility of oxygen and other geochemical species. Biological activity can occur at groundwater temperatures between 5 and 20 °C, while temperatures greater than 20 °C are considered ideal for microbially mediated reactions.

At the 2nd Street Disposal Area, groundwater temperatures ranged from 15 to 17 °C (**Table 21**). Similar temperatures (16 to 18 °C) were observed at the 5th Street Disposal Area (**Table 21**).

6.3.9 Natural Attenuation Summary

Overall, geochemical conditions, such as DO concentrations around 1 mg/L, the presence of nitrate and sulfate, the absence of ferrous iron, and the positive ORP values, are favorable for aerobic biodegradation pathways, which have been well characterized for benzene and chlorobenzenes. To a lesser degree, these mildly aerobic conditions tend to limit reductive dechlorination of chlorinated aliphatic compounds (such as PCE) as conditions are less than ideal for this anaerobic process (presence of DO, limited TOC, low methane, absence of sulfides). However, since vinyl chloride has been detected, the biodegradation of PCE may occur low rates.

6.4 Risk Receptors

An evaluation was conducted to identify potential human health and ecological receptors based on the nature and extent of COCs. The results of this evaluation are presented below.

6.4.1 Human Health

Based on the current and reasonably anticipated future land use, adult visitors are the only expected human receptors for TRDA. However, for conservativeness, unlimited use and unrestricted exposure was evaluated through comparison to residential health-based PSRGs (see **Sections 5.1.3** and **5.2.3**). Following completion of the RA which addressed waste and impacted soil, exposure to contaminants in groundwater have been identified as potential concerns. The current extents of groundwater contamination are provided on **Figure 20** and **Figure 21**, and will be maintained in the facility geographic information system for use during environmental review of proposed construction projects. There are currently no buildings on or within 100 feet of TRDA; therefore, vapor intrusion is not a currently complete exposure pathway and an evaluation of subsurface vapor intrusion is not required by the REC guidance (NCDEQ, 2015). However, if new construction were to take place within 100 feet of the VOC plume, potential vapor intrusion pathways should be evaluated. Therefore, the extents of contamination presented on **Figure 20** and **Figure 21** include 100-foot buffers for land use planning.

6.4.2 Ecological

Information gathered from the sensitive environment contacts listed in Appendix C of the REC guidance (NCDEQ, 2015) and the Integrated Natural Resources Management Plan (INRMP) (HPDTA, 2007) did not identify any documented occurrences of federal or state listed rare, threatened, or endangered species at HPDTA. Results of the INRMP assessment indicated HPDTA does not contain suitable habitat for any federally listed endangered or threatened species known to occur in the area. The INRMP identified approximately 860 acres of wetlands at HPDTA, and the closest wetland is approximately 700 feet from the 2nd Street Disposal Area. Therefore, there are no ecological receptors that require consideration.

6.5 Summary

The primary contaminant migration pathway is through groundwater flow. Groundwater (and COCs dissolved in groundwater) would be expected to migrate along a flat hydraulic gradient in a northerly direction.

The primary mechanisms of attenuation of the organic COCs are dilution, dispersion, and biodegradation. Conditions are favorable for aerobic degradation of benzene and chlorobenzenes.

However, conditions are generally unfavorable for reductive dechlorination of chlorinated aliphatic compounds (such as PCE) based on suboptimal natural attenuation indicator parameters. However, since vinyl chloride has been detected, the biodegradation of PCE may occur at low rates.

For human health, adult visitors are the only expected human receptors. However, for conservativeness, unlimited use and unrestricted exposure is considered as a possibility. There are currently no buildings on or within 100 feet of TRDA; therefore, vapor intrusion is not a currently complete exposure pathway. There are no ecological receptors that require consideration.

SECTION 7

Conclusions and Recommendations

The following presents the conclusions and recommendations for TRDA based on the current, post-RA conditions:

7.1 Conclusions

The following conclusions summarize the results of the RI in consideration of the REC Program RI phase purpose:

- The potential source of site contamination is from historical waste disposal activities. However, the waste and impacted soil, including MPPEH, was removed during the RA.
- The nature and extent of releases has been determined as follows:
  - 2nd Street Disposal Area:
    - Soil: Following the RA, there is no remaining contamination in soil.
    - Groundwater:
      - VOC COCs (PCE and vinyl chloride) have been identified in the surficial aquifer. PCE is the most prevalent VOC COC, whereas vinyl chloride was only detected at a low concentration in one sample (2012). PCE was detected at low concentrations exceeding the regulatory standard over an area of 0.7 acre throughout, sidegradient to the southeast, and just downgradient of the former waste disposal area, primarily at the deeper sample intervals. There is limited uncertainty with the horizontal and vertical extents of PCE, based on the detections at concentrations exceeding the regulatory standard(s) at the perimeter sample locations and at the deepest interval sampled. However, because of the low magnitude of detection, it is not expected that the extent of PCE is significantly greater than currently delineated.
      - Metal COCs (cobalt and/or manganese) have been identified in the surficial aquifer, with the highest concentrations in the central portion of the site. Concentrations across the site have the same order of magnitude to background values; therefore, there is uncertainty whether the metal COCs are site related.
  - 5th Street Disposal Area
    - Soil: Following the RA, there is no remaining contamination in soil.
    - Groundwater:
      - VOC COCs (chlorinated aliphatic VOCs, aromatic chlorobenzenes, and fuel compounds) have been identified in the surficial aquifer. Concentrations were detected in the north-central portion and downgradient of the former waste disposal area, covering 0.4 acre, primarily in the deeper sample intervals. The plumes are overlapping, with the aromatic chlorobenzenes and fuel compounds slightly more downgradient than the chlorinated aliphatic VOCs. There is limited uncertainty with the horizontal and vertical extent of the VOCs based on the detections at concentrations exceeding the regulatory standard(s) at the perimeter sample locations and at the deepest interval sampled. However, because of the low magnitude of detections at the most downgradient sample location, it is not expected that the extent of VOCs is significantly greater than currently delineated.

    - Metal COCs (cobalt, iron, manganese, and vanadium) have been identified in the surficial aquifer, with the highest concentrations in the central portion of the site. Concentrations across the site have the same order of magnitude to background values; therefore, there is uncertainty whether the metal COCs are site related.
    - There is uncertainty with evaluation of 1,2,3-trichlorobenzene and the explosives residues because there are no available evaluation criteria. Support from NCDEQ has been requested.

- Primary fate and transport pathways have been identified as follows:
  - Groundwater (and COCs dissolved in groundwater) would be expected to migrate along a flat hydraulic gradient in a northerly direction with groundwater flow.
  - Attenuation of the organic COCs would be expected through dilution, dispersion, and biodegradation. Conditions are favorable for aerobic degradation of benzene and chlorobenzenes. Conditions are generally unfavorable for reductive dechlorination of chlorinated aliphatic compounds (such as PCE) based on suboptimal natural attenuation indicator parameters. However, since vinyl chloride has been detected, the biodegradation of PCE may occur at low rates.
  - For human health, adult visitors are the only expected human receptors. However, for conservativeness, unlimited use and unrestricted exposure is considered as a possibility. There are currently no buildings on or within 100 feet of TRDA; therefore, vapor intrusion is not a currently complete exposure pathway.
  - There are no ecological receptors that require consideration.

7.2 Recommendations

Based on the conclusions above, no further action is recommended for surface and subsurface soil at TRDA. The following recommendations apply for groundwater:

- Prepare an addendum to the RI to address the uncertainty associated with the 1,2,3-trichlorobenzene and the explosives residues in groundwater at the 5th Street Disposal Area.
- Conduct a Feasibility Study to develop and evaluate potential remedial alternatives to mitigate the TRDA groundwater COCs. In support of the Feasibility Study, limited horizontal and vertical refinement of VOCs in groundwater at both the 2nd Street Disposal Area and 5th Street Disposal Area is recommended. In addition, preliminary cleanup levels for 2nd Street Disposal Area and 5th Street Disposal Area were developed in consideration of background values[4] and regulatory standards, and are presented in **Table 17.**

[4] Additional background studies are ongoing for the facility and the results should be considered with respect to refinement of metals COCs.

SECTION 8

References

ATS. 2011a. *Geophysical Survey for the Second Street Trash Site, Harvey Point Defense Testing Activity, Hertford, North Carolina*. November.

ATS. 2011b. *Geophysical Survey for the Fifth Street Trash Site, Harvey Point Defense Testing Activity, Hertford, North Carolina*. November.

CH2M. 2013a. *Remedial Investigation Work Plan, Towers Road Disposal Areas, Harvey Point Defense Testing Activity, Hertford, North Carolina*. April.

CH2M. 2013b. *Remedial Investigation Work Plan Addendum, Towers Road Disposal Areas, Harvey Point Defense Testing Activity, Hertford, North Carolina*. May.

CH2M. 2014a. *Phase I Remedial Investigation Report, Towers Road Disposal Area, Harvey Point Defense Testing Activity, Hertford, North Carolina*. March.

CH2M. 2014b. *Phase II Remedial Investigation Work Plan, Towers Road Disposal Areas, Harvey Point Defense Testing Activity, Hertford, North Carolina. April.*

CH2M. 2014c. *Interim Remedial Action Plan and Preconstruction Report, Towers Road Disposal Areas – Waste and Soil, Harvey Point Defense Testing Activity, Hertford, North Carolina*. April.

CH2M. 2014d. *Explosives Safety Submission Determination Request for Towers Road Disposal Areas 5th Street Disposal Area, Harvey Point Defense Training Activity, Hertford, North Carolina.* November.

CH2M. 2015a. *Accident Prevention Plan*, *Remedial Investigation and Interim Remedial Action Plan, Towers Road Disposal Area, Harvey Point Defense Testing Activity, Hertford, North Carolina.* August.

CH2M. 2015b. *Explosives Safety Submission for Towers Road Disposal Areas 2nd Street Disposal Area, Harvey Point Defense Training Activity, Hertford, North Carolina.* September.

CH2M. 2015c. *Remedial Action Plan and Preconstruction Report Addendum, Towers Road Disposal Areas, Harvey Point Defense Testing Activity, Hertford, North Carolina*. October.

CH2M. 2015d. *Phase II Remedial Investigation Work Plan Addendum, Towers Road Disposal Areas, Harvey Point Defense Testing Activity, Hertford, North Carolina*. December.

CH2M. 2016a. *Explosives Safety Submission Determination Request for Groundwater Sampling and Monitoring Well Installation at the Second Street Disposal Area, Harvey Point Testing Activity, Hertford, North Carolina*. January.

CH2M. 2016b. *Remedial Action Construction Completion, Remedial Action Completion Report, Harvey Point Defense Testing Activity, Hertford, North Carolina.* February.

ERG. 2003. *Draft Issue Paper on the Environmental Chemistry of Metals*. Prepared for U.S. EPA. August

HPDTA. 2007. *Integrated Natural Resources Management Plan, Harvey Point Defense Testing Activity, Hertford, North Carolina*. May.

HPDTA. 2013. *Integrated Natural Resources Management Plan 2012-2017, Harvey Point Defense Testing Activity, Hertford, North Carolina.* June.

NCDENR. 2013. *Executed REC Administrative Agreement, Towers Road Disposal Area*. April.

NCDEQ. 2015. *Registered Environmental Consultant Program Implementation Guidance*. October.

OHM. 1997. *Contractor's Closeout Report for Remediation of PCB-Contaminated Soil at Range Areas A, B and D, Harvey Point Defense Testing Activity, Hertford, North Carolina*. May.

Potomac-Hudson Engineering. 1994. *Preliminary Assessment for the Harvey Point Defense Testing Activity*, Hertford, North Carolina. March.

USEPA. 1979. *Water-related Environmental Fate of 129 Priority Pollutants. Volume 1: Introduction and Technical Background, Metals, Inorganics, Pesticides, and PCBs.* Office of Water Planning and Standards, Office of Water and Waste Management, Washington, D.C. December.

Tables

TABLE 1

Crosswalk to Required Information

TRDA Remedial Investigation Report

Harvey Point Defense Testing Activity

Hertford, North Carolina

REC Program Rules	Required Information	Location in this RI Report
15A NCAC 13C .0306(h)(1)	Description of Investigation including work plan variances	Section 3
15A NCAC 13C .0306(h)(2)	Groundwater monitoring well design and installation procedures*	Attachment A; Section 3.4.2.2
15A NCAC 13C .0306(h)(3)	Monitoring well and sample locations	Section 3.4.2; Figure 6; Figure 7; Figure 8
15A NCAC 13C .0306(h)(4)	Field and laboratory QA/QC	Section 3.6
15A NCAC 13C .0306(h)(5)	Management of investigation-derived waste	Section 3.2.5; Section 3.4.3
15A NCAC 13C .0306(h)(6)	Site geologic conditions	Section 2.1; Section 4; Figure 10; Figure 11; Attachment A
15A NCAC 13C .0306(h)(7)	Site hydrogeologic conditions	Section 2.1; Section 4.2; Table 12; Figure 9; Figure 10; Figure 11; Table 6; Attachment A
15A NCAC 13C .0306(h)(8)	Sample analytical results	Section 5; Table 13; Table 14; Table 15; Table 16; Table 18; Table 19; Table 20; Attachment B; Attachment D
15A NCAC 13C .0306(h)(9)	Sample results figures and cross sections	Figure 10; Figure 11; Figure 12; Figure 13; Figure 14; Figure 15; Figure 16; Figure 17; Figure 18; Figure 19; Figure 20; Figure 21
15A NCAC 13C .0306(h)(10)	Procedures and results of special assessments (i.e., geophysical survey and test pitting)	Section 3.2.1; Section 3.2.2; Figure 6; Figure 7
15A NCAC 13C .0306(h)(11)	Color copies of site photographs	Not Included (Site photographs were not taken during Phase II activities due to base restrictions. Photographs taken during Phase I activities are included in the Phase I RI Report (CH2M, 2014a)

Notes:

*Monitoring well construction permits are not included for the wells, as permits were not obtained based on information provided to CH2M from the North Carolina Division of Water Quality Washington Regional Office that well permits are not required for installation by government entities installing wells on government property.

TABLE 2

Background Soil Sample Summary

TRDA Remedial Investigation Report

Harvey Point Defense Testing Activity

Hertford, North Carolina

Station ID	Soil Description	Sample ID	Date Sampled	Sampling Intervals (feet bgs)	Analytes
Background Surface Soil					
HPDTA-BG-SS01	silt	HPDTA-BG-SS01-0514	6/10/2013	0.5-1	TAL Metals (excluding mercury)
		HPDTA-BG-SS01-0514	5/5/2014	0.5-1	PAHs, dibenzofuran
HPDTA-BG-SS02	silt	HPDTA-BG-SS02-0514	6/12/2013	0.5-1	TAL Metals (excluding mercury)
		HPDTA-BG-SS02-0514	5/5/2014	0.5-1	PAHs, dibenzofuran
HPDTA-BG-SS03	silt	HPDTA-BG-SS03-0514	6/12/2013	0.5-1	TAL Metals (including mercury) and hexavalent chromium
		HPDTA-BG-SS03-0514	5/5/2014	0.5-1	PAHs, dibenzofuran
HPDTA-BG-SS04	clayey silt	HPDTA-BG-SS04-0514	6/12/2013	0.5-1	TAL Metals (excluding mercury)
		HPDTA-BG-SS04-0514	5/5/2014	0.5-1	PAHs, dibenzofuran
HPDTA-BG-SS05	sand	HPDTA-BG-SS05-0514	6/12/2013	0.5-1	TAL Metals (excluding mercury)
		HPDTA-BG-SS05-0514	5/5/2014	0.5-1	PAHs, dibenzofuran
Background Subsurface Soil					
HPDTA-BG-SB01	clay	HPTDA-BG-SB01-0.5-01-0613	6/12/2013	0.5-1	TAL Metals (excluding mercury)
		HPTDA-BG-SB01-04-06-0613	6/12/2013	4-6	
		HPDTA-BG-SB01-02-04-0514	5/6/2014	2-4	PAHs, dibenzofuran
HPDTA-BG-SB02	silty clay	HPDTA-BG-SB02-0.5-01-0613	6/13/2013	0.5-1	TAL Metals (excluding mercury)
		HPDTA-BG-SB02-03-05-0613	6/13/2013	3-5	TAL Metals (including mercury) and hexavalent chromium
		HPDTA-BG-SB02-02-04-0514	5/6/2014	2-4	PAHs, dibenzofuran
HPDTA-BG-SB03	clay	HPDTA-BG-SB03-0.5-01-0613	6/19/2013	0.5-1	TAL Metals (including mercury) and hexavalent chromium
		HPDTA-BG-SB03-04-06-0613	6/19/2013	4-6	
		HPDTA-BG-SB03-02-04-0514	5/6/2014	2-4	PAHs, dibenzofuran
HPDTA-BG-SB04	clay	HPDTA-BG-SB04-0.5-01-0613	6/19/2013	0.5-1	TAL Metals (including mercury)
		HPDTA-BG-SB04-03-05-0613	6/19/2013	3-5	
		HPDTA-BG-SB04-02-04-0514	5/6/2014	2-4	PAHs, dibenzofuran
HPDTA-BG-SB05	sand	HPDTA-BG-SB05-0.5-01-0613	6/18/2013	0.5-1	TAL Metals (excluding mercury)
		HPDTA-BG-SB05-06-08-0613	6/18/2013	6-8	
		HPDTA-BG-SB05-02-04-0514	5/6/2014	2-4	PAHs, dibenzofuran

Notes:

bgs - below ground surface

PAH - Polycyclic aromatic hydrocarbon

TABLE 3

Background Groundwater Sample Summary

TRDA Remedial Investigation Report

Harvey Point Defense Testing Activity

Hertford, North Carolina

Station ID	Sample ID	Date Sampled	Sampling Intervals (feet bgs)	Analytes
Background Groundwater Sampling				
HPDTA-BG-MW01	HPDTA-BG-MW01-0613	6/21/2013	Mid-point of screen interval (7-27)	Total and Dissolved TAL Metals
	HPDTA-BG-MW01-0514	5/9/2014		PAHs, Dibenzofuran
HPDTA-BG-MW02	HPDTA-BG-MW02-0613	6/21/2013		Total and Dissolved TAL Metals
	HPDTA-BG-MW02-0514	5/9/2014		PAHs, Dibenzofuran
HPDTA-BG-MW03	HPDTA-BG-MW03-0613	6/21/2013		Total and Dissolved TAL Metals
	HPDTA-BG-MW03-0514	5/9/2014		PAHs, Dibenzofuran
HPDTA-BG-MW04	HPDTA-BG-MW04-0613	6/21/2013		Total and Dissolved TAL Metals
	HPDTA-BG-MW04-0514	5/9/2014		PAHs, Dibenzofuran

Notes:

bgs - below ground surface

PAH - Polycyclic aromatic hydrocarbon

TABLE 4

Monitoring Well Construction Summary

TRDA Remedial Investigation Report

Harvey Point Defense Testing Activity

Hertford, North Carolina

Monitoring Well	Installation Date	Well Type	Ground Elevation (ft)	Top of Casing Elevation (ft)	Total Well Depth (ft bgs)	Length of Screen (ft)	Depth of Top of Screen (ft bgs)	Depth of Bottom of Screen (ft bgs)	Elevation of Top of Screen (ft)	Elevation of Bottom of Screen (ft)	Northing	Easting
Background												
HPDTA-BG-MW01	6/12/2013	Flushmount	6.93	6.62	27	20	7	27	-0.07	-20.07	866867.00	2788309.60
HPDTA-BG-MW02	6/13/2013	Flushmount	NM	5.68	27	20	7	27	-1.32	-21.32	867840.11	2787247.22
HPDTA-BG-MW03	6/14/2013	Flushmount	6.30	6.08	27	20	7	27	-0.7	-20.7	866665.64	2786754.44
HPDTA-BG-MW04	6/14/2013	Flushmount	6.29	5.92	27	20	7	27	-0.71	-20.71	866381.07	2787624.29
2nd Street Disposal Area												
TR-2ND-MW01	6/11/2013	Flushmount	6.29	6.14	27	20	7	27	-0.71	-20.71	867530.12	2787183.62
TR-2ND-MW02	6/11/2013	Flushmount	6.06	5.76	27	20	7	27	-0.94	-20.94	867497.18	2787097.60
TR-2ND-MW03	1/28/2016	Flushmount	5.96	5.90	27	10	17	27	-11.10	-21.10	867462.91	2787030.83
TR-2ND-MW04	1/29/2016	Flushmount	6.34	6.24	27	10	17	27	-10.76	-20.76	867428.43	2787118.95
TR-2ND-MW05	2/1/2016	Flushmount	5.17	5.03	27	10	17	27	-11.97	-21.97	867514.26	2787222.86
TR-2ND-MW06	2/2/2016	Stickup	6.36	9.39	27	10	17	27	-7.61	-17.61	867433.43	2787242.97
TR-2ND-MW07	2/2/2016	Stickup	6.18	9.03	27	10	17	27	-7.97	-17.97	867646.20	2787151.99
5th Street Disposal Area												
TR-5TH-MW01	6/12/2013	Flushmount	6.94	6.78	27	20	7	27	-0.06	-20.06	867102.48	2788448.03
TR-5TH-MW02	6/13/2013	Stickup	5.74	8.61	27	20	7	27	1.61	-18.39	867226.57	2788363.96
TR-5TH-MW03	1/26/2016	Flushmount	6.63	6.55	27	10	17	27	-10.45	-20.45	867167.15	2788301.23
TR-5TH-MW04	1/26/2016	Stickup	5.16	7.60	27	10	17	27	-9.40	-19.40	867276.53	2788283.98
TR-5TH-MW05	1/27/2016	Stickup	5.98	8.62	27	10	17	27	-8.38	-18.38	867272.72	2788400.94
TR-5TH-MW06	1/27/2016	Flushmount	6.63	6.41	27	10	17	27	-10.59	-20.59	867194.56	2788424.38
TR-5TH-MW07	1/28/2016	Flushmount	6.40	6.31	27	10	17	27	-10.69	-20.69	867151.62	2788480.40

Notes:

bgs - below ground surface

btoc - below top of casing

ft - feet

msl - mean sea level

NM - not measured

TABLE 5

Groundwater Field Parameters Summary

TRDA Remedial Investigation Report

Harvey Point Defense Testing Activity

Hertford, North Carolina

Sample ID	Date Sampled	Depth to Water from Measuring Point (ft)*	Flow Rate (L/min)	Volume Purged (L)	PH (pH)	Specific Conductivity (mS/cm)	Turbidity (NTU)	Dissolved Oxygen (mg/L)	Dissolved Oxygen by Chemets (mg/L)	Temperature (deg_C)	Oxidation Reduction Potential (mV)	Salinity (ppt)	Ferrous Iron (mg/L)
Background													
HPDTA-BG-MW01	6/21/2013	5.84	0.30	6.00	5.65	0.27	4.51	2.79	5.00	17.85	169.20	0.13	0.00
	5/914	3.66	0.25	7.50	5.02	0.18	2.65	0.25	0.20	16.46	137.10	NM	0.20
HPDTA-BG-MW02	6/21/2013	5.04	0.30	10.30	5.74	0.14	31.80	0.55	0.90	17.86	155.70	0.07	0.00
	5/9/2014	2.73	0.20	6.00	5.06	0.13	2.77	0.28	0.80	17.51	125.10	NM	0.10
HPDTA-BG-MW03	6/21/2013	4.91	0.25	4.00	5.74	0.19	7.97	1.12	1.00	16.95	172.30	0.09	0.00
	5/9/2014	3.03	0.30	9.00	5.25	0.10	8.06	2.93	1.00	16.10	138.20	NM	0.10
HPDTA-BG-MW04	6/21/2013	4.69	0.30	6.00	5.73	0.13	2.09	1.00	1.00	17.94	130.40	0.06	0.00
	5/9/2014	2.86	0.30	9.00	5.17	0.14	3.79	1.06	0.50	16.74	124.30	NM	0.20
2nd Street Disposal Area													
TR-2ND-MW01**	6/20/2013	5.27	0.50	16.00	5.99	0.57	12.00	0.61	1.00	16.69	-172.70	0.28	0.00
TR-2ND-MW02**	6/20/2013	4.78	0.30	16.00	5.92	0.32	26.40	3.15	1.00	18.15	121.30	0.15	0.00
TR-2ND-MW03	2/10/2016	5.02	0.50	3.33	5.67	0.21	1.44	1.04	1.00	17.41	95.50	NM	0.00
TR-2ND-MW04	2/10/2016	5.18	0.50	3.14	5.48	0.33	2.06	1.15	1.00	17.34	101.60	NM	0.00
TR-2ND-MW05	2/12/2016	1.55	0.50	3.49	6.06	0.68	1.29	8.19	1.00	15.70	80.40	NM	0.00
TR-2ND-MW06	2/10/2016	5.57	0.50	3.14	5.42	0.25	2.34	0.98	0.80	16.19	129.10	NM	0.00
TR-2ND-MW07	2/12/2016	5.65	0.50	3.28	5.45	0.46	2.82	5.93	0.60	15.83	153.60	NM	0.00
5th Street Disposal Area													
TR-5TH-MW01**	6/20/2013	5.69	0.25	9.75	6.00	0.45	16.80	0.83	1.00	17.53	61.60	0.22	1.20
TR-5TH-MW02***	6/20/2013	7.53	0.30	5.50	5.66	0.46	49.20	3.51	2.00	17.30	139.20	0.22	1.10
	2/11/2016	5.27	0.50	3.33	5.92	0.30	7.26	1.58	1.00	16.94	103.30	NM	0.00
TR-5TH-MW03	2/9/2016	2.64	0.50	3.38	5.82	0.26	3.63	NM	0.80	18.00	70.10	NM	0.00
TR-5TH-MW04	2/16/2016	4.60	0.50	3.35	5.81	0.43	2.91	4.23	1.00	16.56	79.50	NM	0.00
TR-5TH-MW05	2/11/2016	5.60	0.50	3.40	5.47	0.47	1.67	3.09	0.60	16.17	133.80	NM	0.00
TR-5TH-MW06	2/11/2016	3.65	0.50	2.96	5.52	0.31	2.86	1.89	0.80	17.11	129.50	NM	0.00
TR-5TH-MW07	2/11/2016	3.26	0.50	3.33	5.98	0.63	2.12	4.73	1.00	17.45	84.90	NM	0.00

Notes:

deg_C - Degrees centigrade
ft - Feet
L - Liters
L/min - Liters per minute
mg/L - Milligrams per liter
mS/cm - Millisiemens per centimeter
mV - Millivolts
NM - Not Measured
NTU - Nephlometric turbidity unit
pH - PH units
ppt - parts per trillion
* Indicates value from just before sample collection
** Well was abandoned during Remedial Action excavation activities

TABLE 6

Water Level Measurements Summary

TRDA Remedial Investigation Report

Harvey Point Defense Testing Activity

Hertford, North Carolina

Well ID	Date	Ground Elevation (ft)	TOC Elevation (ft)	Total Well Depth (ft bgs)	Depth to Water (ft BTOC)	Groundwater Elevation* (ft)
Background						
HPDTA-BG-MW01	06/20/2013	6.93	6.62	27.00	5.34	1.28
	02/17/2016	6.93	6.62	27.00	3.01	3.61
HPDTA-BG-MW02	06/20/2013	NM	5.68	27.00	4.83	0.85
	02/17/2016	NM	5.68	27.00	2.57	3.11
HPDTA-BG-MW03	06/20/2013	6.30	6.08	27.00	4.82	1.26
	02/17/2016	6.30	6.08	27.00	2.58	3.50
HPDTA-BG-MW04	06/20/2013	6.29	5.92	27.00	4.62	1.30
	02/17/2016	6.29	5.92	27.00	2.08	3.84
2nd Street Disposal Area						
TR-2ND-MW01**	06/20/2013	6.29	6.14	27.00	5.10	1.04
TR-2ND-MW02**	06/20/2013	6.06	5.76	27.00	4.66	1.10
TR-2ND-MW03	02/17/2016	5.96	5.90	27.00	1.95	3.95
TR-2ND-MW04	02/17/2016	6.34	6.24	27.00	2.17	4.07
TR-2ND-MW05	02/17/2016	5.17	5.03	27.00	1.09	3.94
TR-2ND-MW06	02/17/2016	6.36	9.39	30.00	5.37	4.02
TR-2ND-MW07	02/17/2016	6.18	9.03	30.00	5.26	3.77
5th Street Disposal Area						
TR-5TH-MW01**	06/20/2013	6.94	6.78	27.00	5.42	1.36
TR-5TH-MW02	06/20/2013	5.74	8.61	30.00	7.42	1.19
	02/17/2016	5.74	8.61	30.00	4.96	3.65
TR-5TH-MW03	02/17/2016	6.63	6.55	27.00	2.82	3.73
TR-5TH-MW04	02/17/2016	5.16	7.60	27.00	4.02	3.58
TR-5TH-MW05	02/17/2016	5.98	8.62	30.00	5.07	3.55
TR-5TH-MW06	02/17/2016	6.63	6.41	27.00	2.74	3.67
TR-5TH-MW07	02/17/2016	6.40	6.31	27.00	2.63	3.68

Notes:

BTOC - below top of casing

ft - feet

NM - Not Measured (measured during previous sampling events)

TOC - top of casing

* Groundwater Elevation = TOC Elevation - Depth to Water

** Well was installed during the Phase I RI and abandoned during Remedial Action excavation activities

TABLE 7

Site-Specific Surface Soil Sample Summary

TRDA Remedial Investigation Report

Harvey Point Defense Testing Activity

Hertford, North Carolina

Station ID	Sample ID	Soil Description	Date Sampled	Sampling Intervals (feet bgs)	Analytes
Phase I RI					
2nd Street Disposal Area					
TR-2ND-SS01	TR-2ND-SS01-0613*	topsoil	6/11/2013	0.0-0.5/0.5-1.0**	- TCL VOCs (and 1,4-dioxane) - TCL SVOCs - TCL Pesticides/Polychlorinated Biphenyls - TAL Metals ***Note: Exceptions identified in Sample ID column.***
TR-2ND-SS02	TR-2ND-SS02-0613*	topsoil	6/11/2013	0.0-0.5/0.5-1.0**	
TR-2ND-SS03	TR-2ND-SS03-0613***	topsoil	6/11/2013	0.0-0.5/0.5-1.0**	
TR-2ND-SS04	TR-2ND-SS04-0613***	topsoil	6/11/2013	0.0-0.5/0.5-1.0**	
TR-2ND-SS05	TR-2ND-SS05-0613***	topsoil	6/11/2013	0.0-0.5/0.5-1.0**	
5th Street Disposal Area					
TR-5TH-SS01	TR-5TH-SS01-0613***	topsoil	6/20/2013	0.0-0.5/0.5-1.0**	
TR-5TH-SS02	TR-5TH-SS02-0613***	topsoil	6/20/2013	0.0-0.5/0.5-1.0**	
TR-5TH-SS03	TR-5TH-SS03-0613*	topsoil	6/19/2013	0.0-0.5/0.5-1.0**	
TR-5TH-SS04	TR-5TH-SS04-0613***	topsoil	6/19/2013	0.0-0.5/0.5-1.0**	
TR-5TH-SS05	TR-5TH-SS05-0613***	topsoil	6/19/2013	0.0-0.5/0.5-1.0**	
Phase II RI					
2nd Street Disposal Area					
TR-2ND-SS06	TR-2ND-SS06-0514	silt, silty clay	5/5/2014	0-0.5	- Select SVOCs (2-Methylnaphthalene, Acenaphthene, Acenaphthylene, Anthracene, Benzo(a)anthracene, Benzo(a)pyrene, Benzo(b)fluoranthene, Benzo(g,h,i)perylene, Benzo(k)fluoranthene, Chrysene, Dibenz(a,h)anthracene, Fluoranthene, Fluorene, Indeno(1,2,3-cd)pyrene, Naphthalene, Phenanthrene, Pyrene) - Select Polychlorinated Biphenyls (Aroclor-1254, Aroclor-1260) - Select Metals (Antimony, Arsenic, Barium, Cadmium, Chromium, Cobalt, Copper, Iron, Lead, Mercury, Nickel, Silver, Zinc)
TR-2ND-SS07	TR-2ND-SS07-0514	gravel, sand, silty clay	5/5/2014	0-0.5	
TR-2ND-SS08	TR-2ND-SS08-0514	sandy silt (debris present)	5/5/2014	0-0.5	
TR-2ND-SS09	TR-2ND-SS09-0514	silt, silty clay	5/5/2014	0-0.5	
TR-2ND-SS10	TR-2ND-SS10-0514	clayey silt	5/5/2014	0-0.5	
TR-2ND-SS11	TR-2ND-SS11-0514	silt, clayey silt	5/5/2014	0-0.5	
TR-2ND-SS12	TR-2ND-SS12-0514	clayey silt	5/5/2014	0-0.5	
TR-2ND-SS13	TR-2ND-SS13-0514	clayey silt	5/5/2014	0-0.5	
TR-2ND-SS14	TR-2ND-SS14-0514	clayey silt	5/5/2014	0-0.5	
5th Street Disposal Area					
TR-5TH-SS06	TR-5TH-SS06-0514	silt	5/5/2014	0.0-0.5/0.5-1.0**	- Select VOCs (Benzene, Styrene) - Select SVOCs (Acenaphthene, Acenaphthylene, Anthracene, Benzo(a)anthracene, Benzo(a)pyrene, Benzo(b)fluoranthene, Benzo(g,h,i)perylene, Benzo(k)fluoranthene, Carbazole, Chrysene, Dibenz(a,h)anthracene, Dibenzofuran, Fluoranthene, Fluorene, Indeno(1,2,3-cd)pyrene, Phenanthrene, Pyrene) - Select Polychlorinated Biphenyls (Aroclor-1254, Aroclor-1260) - Select Metals (Antimony, Arsenic, Cadmium, Iron, Lead, Mercury, Zinc)
TR-5TH-SS07	TR-5TH-SS07-0514	silt and sand (debris present)	5/5/2014	0.0-0.5/0.5-1.0**	
TR-5TH-SS08	TR-5TH-SS08-0514	silt	5/5/2014	0.0-0.5/0.5-1.0**	
TR-5TH-SS09	TR-5TH-SS09-0514	silt (wet)	5/5/2014	0.0-0.5/0.5-1.0**	
TR-5TH-SS10	TR-5TH-SS10-0514	silt	5/5/2014	0.0-0.5/0.5-1.0**	
TR-5TH-SS11	TR-5TH-SS11-0514	silt	5/5/2014	0.0-0.5/0.5-1.0**	
TR-5TH-SS12	TR-5TH-SS12-0514	silt	5/5/2014	0.0-0.5/0.5-1.0**	
TR-5TH-SS13	TR-5TH-SS13-0514	silty sand	5/5/2014	0.0-0.5/0.5-1.0**	
TR-5TH-SS14	TR-5TH-SS14-0514	silty sand	5/5/2014	0.0-0.5/0.5-1.0**	
TR-5TH-SS15	TR-5TH-SS15-0514	clayey silt	5/5/2014	0.0-0.5/0.5-1.0**	
TR-5TH-SS16	TR-5TH-SS16-0514	clayey silt	5/5/2014	0.0-0.5/0.5-1.0**	
TR-5TH-SS17	TR-5TH-SS17-0514	silt	5/5/2014	0.0-0.5/0.5-1.0**	
TR-5TH-SS18	TR-5TH-SS18-0514	sandy silt	5/5/2014	0.0-0.5/0.5-1.0**	
TR-5TH-SS19	TR-5TH-SS19-0514	sandy silt	5/5/2014	0.0-0.5/0.5-1.0**	
TR-5TH-SS20	TR-5TH-SS20-0514	sandy silt	5/5/2014	0.0-0.5/0.5-1.0**	
TR-5TH-SS21	TR-5TH-SS21-0514	sandy silt	5/5/2014	0.0-0.5/0.5-1.0**	
TR-5TH-SS22	TR-5TH-SS22-0514	silt	5/5/2014	0-0.5	- Explosives residues
TR-5TH-SS23	TR-5TH-SS23-0514	silt	5/5/2014	0-0.5	
TR-5TH-SS24	TR-5TH-SS24-0514	silt	5/5/2014	0-0.5	
TR-5TH-SS25	TR-5TH-SS25-0514	silt	5/5/2014	0-0.5	
TR-5TH-SS26	TR-5TH-SS26-0514	silty sand	5/5/2014	0-0.5	

Notes:

bgs - below ground surface

SVOC - Semivolatile organic compound

TAL - Target Analyte List

TCL - Target Compound List

VOC - Volatile organic compound

* Sample was analyzed for hexavalent chromium

** Sample depth is 0.0 to 0.5 foot bgs for all analytes except VOCs, for which the sample depth is 0.5 to 1 foot bgs.

*** Samples were not analyzed for mercury

TABLE 8

Site-specific Subsurface Soil Sample Summary

TRDA Remedial Investigation Report

Harvey Point Defense Testing Activity

Hertford, North Carolina

Station ID	Sample ID	Soil Description	Date Sampled	Sampling Intervals (feet bgs)	Analytes
Phase I RI					
2nd Street Disposal Area					
TR-2ND-SB01	TR-2ND-SB01-0.5-01-0613*+	silty sand	6/11/2013	0.5-1	- TCL VOCs (and 1,4-Dioxane) - TCL SVOCs - TCL Pesticides/Polychlorinated Biphenyls - TAL Metals ***Note: Exceptions identified in Sample ID column.***
	TR-2ND-SB01-06-08-0613*+	clay with sand, silty sand	6/11/2013	6-8	
TR-2ND-SB02	TR-2ND-SB02-0.5-1-0613*	silty sand with gravel	6/19/2013	0.5-1	
	TR-2ND-SB02-06-08-0613*	silt	6/19/2013	6-8	
TR-2ND-SB03	TR-2ND-SB03-0.5-01-0613	silty sand	6/19/2013	0.5-1	
	TR-2ND-SB03-04-06-0613	silty sand	6/19/2013	4-6	
TR-2ND-SB04	TR-2ND-SB04-0.5-01-0613	silty sand	6/19/2013	0.5-1	
	TR-2ND-SB04-04-06-0613	silty sand	6/19/2013	4-6	
TR-2ND-SB05	TR-2ND-SB05-0.5-01-0613	silty sand with gravel	6/19/2013	0.5-1	
	TR-2ND-SB05-03-05-0613	silt with sand	6/19/2013	3-5	
TR-2ND-SB06	TR-2ND-SB06-0.5-01-0613*	silty sand with gravel	6/19/2013	0.5-1	
	TR-2ND-SB06-05-07-0613*	clay with silt	6/19/2013	5-7	
TR-2ND-SB07	TR-2ND-SB07-0.5-01-0613	silty sand	6/19/2013	0.5-1	
	TR-2ND-SB07-04-06-0613	silt, silty sand	6/19/2013	4-6	
5th Street Disposal Area					
TR-5TH-SB01	TR-5TH-SB01-0.5-01-0613*	silty sand	6/12/2013	0.5-1	
	TR-5TH-SB01-02-04-0613*	silty sand	6/12/2013	2-4	
TR-5TH-SB02	TR-5TH-SB02-0.5-01-0613*	clayey sand	6/13/2013	0.5-1	
	TR-5TH-SB02-02-04-0613*	sandy clay with silt	6/13/2013	2-4	
TR-5TH-SB03	TR-5TH-SB03-0.5-01-0613**	silty sand	6/17/2013	0.5-1	
	TR-5TH-SB03-02-04-0613**	silty sand	6/17/2013	2-4	
TR-5TH-SB04	TR-5TH-SB04-0.5-01-0613**	silty sand	6/17/2013	0.5-1	
	TR-5TH-SB04-04-06-0613**	silt with sand	6/17/2013	4-6	
TR-5TH-SB05	TR-5TH-SB05-0.5-01-0613**	silty sand with gravel	6/18/2013	0.5-1	
	TR-5TH-SB05-02-04-0613**	silty sand	6/18/2013	2-4	
TR-5TH-SB06	TR-5TH-SB06-0.5-01-0613**	silty sand	6/18/2013	0.5-1	
	TR-5TH-SB06-04-06-0613**	sandy clay	6/18/2013	4-6	
Phase II RI					
2nd Street Disposal Area					
TR-2ND-SB08	TR-2ND-SB08-01-03-0514	clay	5/7/2014	1-3	- Select VOCs (Benzene, Bromomethane, Chloroform, Chloromethane, Dichlorodifluoromethane (Freon-12), Ethylbenzene, Isopropylbenzene, m- and p-Xylene, o-Xylene, Styrene, Toluene, Trichlorofluoromethane (Freon-11), Xylene, total) - Select SVOCs (2-Methylnaphthalene, Acenaphthene, Acenaphthylene, Anthracene, Benzo(a)anthracene, Benzo(a)pyrene, Benzo(b)fluoranthene, Benzo(g,h,i)perylene, Benzo(k)fluoranthene, Chrysene, Dibenz(a,h)anthracene, Dibenzofuran, Fluoranthene, Fluorene, Indeno(1,2,3-cd)pyrene, Naphthalene, Phenanthrene, Pyrene) - Select Polychlorinated Biphenyls (Aroclor-1254, Aroclor-1260) - Select Metals (Antimony, Arsenic, Barium, Cadmium, Chromium, Cobalt, Iron, Lead, Manganese, Mercury, Nickel, Silver, Vanadium, Zinc)
	TR-2ND-SB08-03-04-0514	silty clay	5/7/2014	3-4	
TR-2ND-SB09	TR-2ND-SB09-01-03-0514	clay	5/7/2014	1-3	
	TR-2ND-SB09-03-04-0514	clay	5/7/2014	3-4	
TR-2ND-SB10	TR-2ND-SB10-01-03-0514	clayey silt	5/7/2014	1-3	
	TR-2ND-SB10-03-05-0514	clay	5/7/2014	3-5	
TR-2ND-SB11	TR-2ND-SB11-01-03-0514	silty clay	5/7/2014	1-3	
	TR-2ND-SB11-03-05-0514	clay	5/7/2014	3-5	
TR-2ND-SB12	TR-2ND-SB12-01-03-0514	silty clay	5/7/2014	1-3	
TR-2ND-SB13	TR-2ND-SB13-01-03-0514	clay, silty clay	5/7/2014	1-3	
TR-2ND-SB14	TR-2ND-SB14-01-02-0514	silty clay	5/7/2014	1-2	
TR-2ND-SB15	TR-2ND-SB15-01-02-0514	silty clay	5/7/2014	1-2	
TR-2ND-SB16	TR-2ND-SB16-01-02-0514	silty clay	5/7/2014	1-2	
TR-2ND-SB17	TR-2ND-SB17-01-03-0514	silt	5/6/2014	1-3	- 1,4-Dioxane
	TR-2ND-SB17-03-05-0514	silty clay	5/6/2014	3-5	
TR-2ND-SB18	TR-2ND-SB18-01-03-0514	clay	5/6/2014	1-3	
	TR-2ND-SB18-03-05-0514	clay	5/6/2014	3-5	
5th Street Disposal Area					
TR-5TH-SB07	TR-5TH-SB07-01-03-0514	clay, sand, clay	5/7/2014	1-3	- Select VOCs (1,2,3-Trichlorobenzene, 1,2,4-Trichlorobenzene, 1,3-Dichlorobenzene, 1,4-Dichlorobenzene, Benzene, Carbon disulfide, Chlorobenzene, Cyclohexane, Dichlorodifluoromethane (Freon-12), Ethylbenzene, Isopropylbenzene, m- and p-Xylene, Methyl acetate, Methylene chloride, Toluene) - Select SVOCs (Acenaphthene, Acenaphthylene, Anthracene, Benzo(a)anthracene, Benzo(a)pyrene, Benzo(b)fluoranthene, Benzo(g,h,i)perylene, Benzo(k)fluoranthene, Chrysene, Dibenz(a,h)anthracene, Fluoranthene, Fluorene, Indeno(1,2,3-cd)pyrene, Phenanthrene, Pyrene) - One Pesticide (4,4'-DDD) - Select Polychlorinated Biphenyls (Aroclor-1254, Aroclor-1260) - Select Metals (Antimony, Arsenic, Barium, Cadmium, Chromium, Cobalt, Iron, Lead, Mercury, Nickel, Silver, Zinc)
	TR-5TH-SB07-03-04-0514	clay	5/7/2014	3-4	
TR-5TH-SB08	TR-5TH-SB08-01-03-0514	clay	5/7/2014	1-3	
	TR-5TH-SB08-03-05-0514	clay	5/7/2014	3-5	
TR-5TH-SB09	TR-5TH-SB09-01-03-0514	clay	5/7/2014	1-3	
	TR-5TH-SB09-03-05-0514	clay	5/7/2014	3-5	
TR-5TH-SB10	TR-5TH-SB10-01-03-0514	clay	5/7/2014	1-3	
	TR-5TH-SB10-03-04-0514	clay	5/7/2014	3-4	
TR-5TH-SB11	TR-5TH-SB11-01-03-0514	clay	5/7/2014	1-3	
	TR-5TH-SB11-03-05-0514	clay	5/7/2014	3-5	
TR-5TH-SB12	TR-5TH-SB12-01-03-0514	silty clay	5/7/2014	1-3	
	TR-5TH-SB12-03-05-0514	silty clay, clay	5/7/2014	3-5	
TR-5TH-SB13	TR-5TH-SB13-01-03-0514	silty clay, clay	5/7/2014	1-3	
	TR-5TH-SB13-03-05-0514	clay	5/7/2014	3-5	
TR-5TH-SB14	TR-5TH-SB14-01-03-0514	clay	5/7/2014	1-3	
	TR-5TH-SB14-03-05-0514	clay	5/7/2014	3-5	
TR-5TH-SB15	TR-5TH-SB15-01-03-0514	sand, fine particles and gravel, clay	5/7/2014	1-3	
TR-5TH-SB16	TR-5TH-SB16-01-03-0514	silt, sand, gravel pieces, clay	5/7/2014	1-3	
	TR-5TH-SB16-03-04-0514	clay	5/7/2014	3-4	
TR-5TH-SB17	TR-5TH-SB17-01-03-0514	silty clay, clay	5/7/2014	1-3	
TR-5TH-SB18	TR-5TH-SB18-01-03-0514	silty clay, clay, gravel	5/7/2014	1-3	
	TR-5TH-SB18-03-05-0514	clay	5/7/2014	3-5	
TR-5TH-SB19	TR-5TH-SB19-01-03-0514	clay	5/7/2014	1-3	- 1,4-Dioxane
	TR-5TH-SB19-03-04-0514	clay	5/7/2014	3-4	
TR-5TH-SB20	TR-5TH-SB20-01-03-0514	silt, silty clay	5/7/2014	1-3	
	TR-5TH-SB20-03-05-0514	clay	5/7/2014	3-5	

Notes:

bgs - below ground surface

SVOC - Semivolatile organic compound

TAL - Target Analyte List

TCL - Target Compound List

VOC - Volatile organic compound

* Sample was analyzed for hexavalent chromium

** Sample was not analyzed for mercury

+ Sample was not analyzed for alpha-chlordane

TABLE 9

Site-specific Monitoring Well Groundwater Sample Summary

TRDA Remedial Investigation Report

Harvey Point Defense Testing Activity

Hertford, North Carolina

Station ID	Sample ID	Soil Description	Date Sampled	Sampling Intervals (feet bgs)	Analytes
Phase I RI					
2nd Street Disposal Area					
TR-2ND-MW01*	TR-2ND-MW01-0613**	See boring logs in **Attachment A**	6/20/2013	Mid-point of screen interval (7-27)	- TCL VOCs (and 1,4-Dioxane, Ethane, Ethene, and Methane) - TCL SVOCs - TCL Pesticides/Polychlorinated Biphenyls - TAL Metals - Wet Chemistry ***Note: Exceptions identified in Sample ID column.***
TR-2ND-MW02*	TR-2ND-MW02-0613***		6/20/2013		
5th Street Disposal Area					
TR-5TH-MW01*	TR-5TH-MW01-0613**	See boring logs in **Attachment A**	6/20/2013	Mid-point of screen interval (7-27)	
TR-5TH-MW02	TR-5TH-MW02-0613***		6/20/2013		
Phase II RI					
2nd Street Disposal Area					
TR-2ND-MW03	TR-2ND-MW03-0216	Lithology was not recorded during well installation	2/10/2016	Mid-point of screen interval (17-27)	- Select VOCs (1,1,2-Trichloro-1,2,2-trifluoroethane (Freon-113), 1,1-Dichloroethane, 1,1-Dichloroethene, 1,2,3-Trichlorobenzene, 1,2,4-Trichlorobenzene, 1,2-Dichloroethane, Acetone, cis-1,2-Dichloroethene, Dichlorodifluoromethane (Freon-12), Isopropylbenzene, Methylene chloride, Methyl-tert-Butyl Ether (MTBE), Tetrachloroethene, Toluene, trans-1,2-Dichloroethene, Trichloroethene, Trichlorofluoromethane (Freon-11), Vinyl chloride) - Select SVOCs (1,4-Dioxane, Bis(2-ethylhexyl)phthalate) - Select Metals (Antimony, Arsenic, Cobalt, Manganese, Zinc) - Explosives residues
TR-2ND-MW04	TR-2ND-MW04-0216		2/10/2016		
TR-2ND-MW05	TR-2ND-MW05-0216		2/12/2016		
TR-2ND-MW06	TR-2ND-MW06-0216		2/10/2016		
TR-2ND-MW07	TR-2ND-MW07-0216		2/12/2016		
5th Street Disposal Area					
TR-5TH-MW02	TR-5TH-MW02-0216	Lithology was not recorded during well installation	2/11/2016	Mid-point of screen interval (7-27)	- Select VOCs (1,1-Dichloroethene, 1,2,3-Trichlorobenzene, 1,2,4-Trichlorobenzene, 1,2-Dichlorobenzene, 1,2-Dichloroethane, 1,3-Dichlorobenzene, 1,4-Dichlorobenzene, Acetone, Benzene, Chlorobenzene, cis-1,2-Dichloroethene, Dichlorodifluoromethane (Freon-12), Isopropylbenzene, Methylene chloride, Methyl-tert-Butyl Ether (MTBE), Tetrachloroethene, Toluene, trans-1,2-Dichloroethene, Trichloroethene, Trichlorofluoromethane (Freon-11), Vinyl chloride) - Select SVOCs (1,4-Dioxane, Anthracene, Bis(2-ethylhexyl)phthalate, Fluorene, Naphthalene) - Select Metals (Arsenic, Barium, Beryllium, Chromium, Cobalt, Copper, Iron, Lead, Manganese, Nickel, Vanadium, Zinc) - Wet Chemistry (and Ethane, Ethene, Methane)
TR-5TH-MW03	TR-5TH-MW03-0216		2/9/2016	Mid-point of screen interval (17-27)	
TR-5TH-MW04	TR-5TH-MW04-0216		2/16/2016		
TR-5TH-MW05	TR-5TH-MW05-0216		2/11/2016		
TR-5TH-MW06	TR-5TH-MW06-0216		2/11/2016		
TR-5TH-MW07	TR-5TH-MW07-0216		2/11/2016		

Notes:

bgs - below ground surface

MTBE - Methyl-tert-Butyl Ether

SVOC - Semivolatile organic compound

TAL - Target Analyte List

TCL - Target Compound List

VOC - Volatile organic compound

* Well was abandoned during Remedial Action excavation activities

** Analysis included General Microbial Analysis (Dehalococcoides)

*** Sample was not analyzed for Mercury

Wet Chemistry: Alkalinity, Chloride, Nitrate, Nitrite, Sulfate, Sulfide, Total organic carbon (TOC)

TABLE 10

Site-Specific DPT Groundwater Sample Summary

TRDA Remedial Investigation Report

Harvey Point Defense Testing Activity

Hertford, North Carolina

Station ID	Sample ID	Soil Description	Date Sampled	Sampling Intervals (feet bgs)	Analytes
Phase I RI					
2nd Street Disposal Area					
TR-2ND-SB04	TR-2ND-SB04-GW-0613	See boring logs in **Attachment A**	6/19/2013	12-16	- TCL VOCs (and 1,4-Dioxane) - TCL SVOCs
TR-2ND-SB06	TR-2ND-SB06-GW-0613		6/19/2013	12-16	
TR-2ND-SB07	TR-2ND-SB07-GW-0613		6/19/2013	12-16	
5th Street Disposal Area					
TR-5TH-SB03	TR-5TH-SB03-GW-0613	See boring logs in **Attachment A**	6/17/2013	4-8	
TR-5TH-SB04	TR-5TH-SB04-GW-0613		6/17/2013	10-14	
TR-5TH-SB05	TR-5TH-SB05-GW-0613		6/18/2013	12-16	
TR-5TH-SB06	TR-5TH-SB06-GW-0613		6/18/2013	12-16	
Phase II RI					
2nd Street Disposal Area					
TR-2ND-GW01	TR-2ND-GW01-10-14-0116	See boring logs in **Attachment A**	1/14/2016	10-14	- TCL VOCs
TR-2ND-GW02	TR-2ND-GW02-12-16-0116		1/19/2016	12-16	
TR-2ND-GW03	TR-2ND-GW03-11-15-0116		1/15/2016	11-15	
	TR-2ND-GW03-25-29-0116		1/15/2016	25-29	
TR-2ND-GW04	TR-2ND-GW04-10-14-0116		1/14/2016	10-14	
TR-2ND-GW05	TR-2ND-GW05-15-19-0116		1/15/2016	15-19	
	TR-2ND-GW05-25-29-0116		1/15/2016	25-29	
TR-2ND-GW06	TR-2ND-GW06-11-15-0116		1/19/2016	11-15	
TR-2ND-GW07	TR-2ND-GW07-11-15-0116		1/19/2016	11-15	
TR-2ND-GW08	TR-2ND-GW08-11-15-0116		1/19/2016	11-15	
	TR-2ND-GW08-25-29-0116		1/19/2016	25-29	
TR-2ND-GW09	TR-2ND-GW09-12-16-0116		1/19/2016	12-16	
TR-2ND-GW10*	--		--	--	
TR-2ND-GW11	TR-2ND-GW11-10-14-0116		1/20/2016	10-14	
	TR-2ND-GW11-25-29-0116		1/20/2016	25-29	
TR-2ND-GW12*	--		--	--	
5th Street Disposal Area					
TR-5TH-GW01	TR-5TH-GW01-10-14-0116	See boring logs in **Attachment A**	1/12/2016	10-14	
	TR-5TH-GW01-25-29-0116		1/12/2016	25-29	
TR-5TH-GW02	TR-5TH-GW02-06-10-0116		1/12/2016	6-10	
	TR-5TH-GW02-25-29-0116		1/12/2016	25-29	
TR-5TH-GW03	TR-5TH-GW03-10-14-0116		1/12/2016	10-14	
TR-5TH-GW04	TR-5TH-GW04-06-10-0116		1/12/2016	6-10	
TR-5TH-GW05	TR-5TH-GW05-06-10-0116		1/12/2016	6-10	
TR-5TH-GW06	TR-5TH-GW06-10-14-0116		1/12/2016	10-14	
TR-5TH-GW07	TR-5TH-GW07-10-14-0116		1/12/2016	10-14	
TR-5TH-GW08	TR-5TH-GW08-10-14-0116		1/13/2016	10-14	
	TR-5TH-GW08-25-29-0116		1/13/2016	25-29	
TR-5TH-GW09	TR-5TH-GW09-04-08-0116		1/13/2016	4-8	
TR-5TH-GW10	TR-5TH-GW10-10-14-0116		1/13/2016	10-14	
TR-5TH-GW11	TR-5TH-GW11-10-14-0116		1/14/2016	10-14	
	TR-5TH-GW11-25-29-0116		1/13/2016	25-29	
TR-5TH-GW12	TR-5TH-GW12-25-29-0216		2/4/2016	25-29	
TR-5TH-GW13	TR-5TH-GW13-05-09-0116		1/14/2016	5-9	
	TR-5TH-GW13-25-29-0116		1/14/2016	25-29	
TR-5TH-GW14	TR-5TH-GW14-25-29-0216		2/4/2016	25-29	
TR-5TH-GW15*	--		--	--	
TR-5TH-GW16*	--		--	--	
TR-5TH-GW17	TR-5TH-GW17-25-29-0216		2/3/2016	25-29	

Notes:

bgs - below ground surface

SVOC - Semivolatile organic compound

TCL - Target compound list

VOC - Volatile organic compound

* Contingency sample location. Contingency grab groundwater samples were collected and held for analysis pending the results of the initial samples; based on the initial sample results, this contingency sample was not analyzed.

TABLE 11

Site-specific Confirmation Sample Summary

TRDA Remedial Investigation Report

Harvey Point Defense Testing Activity

Hertford, North Carolina

Station ID	Sample ID	Soil Description	Date Sampled	Sample Type*	Analytes
Confirmation Sampling					
2nd Street Disposal Area					
TR-2ND-CSF01	TR-2ND-CSF01-1015	Lithology was not collected during sampling	10/23/2015	Floor	- TCL VOCs (and 1,4-Dioxane) - Select SVOCs (Benzo(a)anthracene, Benzo(a)pyrene, Benzo(b)fluoranthene, Dibenz(a,h)anthracene, Indeno(1,2,3-cd)pyrene, Naphthalene) - Select Polychlorinated Biphenyls (Aroclor-1254, Aroclor-1260) - Select Metals (Antimony, Arsenic, Cadmium, Cobalt, Copper, Iron, Lead, Manganese, Mercury, Silver, Vanadium, Zinc) - Explosives Residues
TR-2ND-CSF02	TR-2ND-CSF02-1015		10/23/2015	Floor	
TR-2ND-CSF03	TR-2ND-CSF03-1015		10/23/2015	Floor	
TR-2ND-CSF04	TR-2ND-CSF04-1015**		10/23/2015	Floor	
TR-2ND-CSF04A	TR-2ND-CSF04A-1015***		10/26/2015	Floor	
TR-2ND-CSF05	TR-2ND-CSF05-1015		10/23/2015	Floor	
TR-2ND-CSF06	TR-2ND-CSF06-1015		10/23/2015	Floor	
TR-2ND-CSF07	TR-2ND-CSF07-1015		10/23/2015	Floor	
TR-2ND-CSF08	TR-2ND-CSF08-1015		10/23/2015	Floor	
TR-2ND-CSF09	TR-2ND-CSF09-1015		10/23/2015	Floor	
TR-2ND-CSF10	TR-2ND-CSF10-1015		10/23/2015	Floor	
TR-2ND-CSF11	TR-2ND-CSF11-1015		10/23/2015	Floor	
TR-2ND-CSF12	TR-2ND-CSF12-1015		10/23/2015	Floor	
TR-2ND-CSW01	TR-2ND-CSW01-1015		10/23/2015	Wall	
TR-2ND-CSW02	TR-2ND-CSW02-1015		10/23/2015	Wall	
TR-2ND-CSW03	TR-2ND-CSW03-1015		10/23/2015	Wall	
TR-2ND-CSW04	TR-2ND-CSW04-1015		10/23/2015	Wall	
TR-2ND-CSW05	TR-2ND-CSW05-1015		10/23/2015	Wall	
TR-2ND-CSW06	TR-2ND-CSW06-1015		10/23/2015	Wall	
TR-2ND-CSW07	TR-2ND-CSW07-1015		10/23/2015	Wall	
TR-2ND-CSW08	TR-2ND-CSW08-1015		10/23/2015	Wall	
TR-2ND-CSW09	TR-2ND-CSW09-1015		10/23/2015	Wall	
5th Street Disposal Area					
TR-5TH-CSF01	TR-5TH-CSF01-0814	Lithology was not collected during sampling	8/1/2014	Floor	- TCL VOCs (and 1,4-Dioxane) - Select SVOCs (Benzo(a)pyrene) - Select Polychlorinated Biphenyls (Aroclor-1254, Aroclor-1260) - Select Metals (Antimony, Arsenic, Cobalt, Iron, Lead, Zinc)
TR-5TH-CSF02	TR-5TH-CSF02-0814		8/1/2014	Floor	
TR-5TH-CSF03	TR-5TH-CSF03-0814		8/1/2014	Floor	
TR-5TH-CSF04	TR-5TH-CSF04-0814		8/1/2014	Floor	
TR-5TH-CSF05	TR-5TH-CSF05-0814		8/1/2014	Floor	
TR-5TH-CSF06	TR-5TH-CSF06-0814		8/1/2014	Floor	
TR-5TH-CSF07	TR-5TH-CSF07-0814		8/1/2014	Floor	
TR-5TH-CSF08	TR-5TH-CSF08-0814		8/1/2014	Floor	
TR-5TH-CSF09	TR-5TH-CSF09-0814		8/1/2014	Floor	
TR-5TH-CSW01	TR-5TH-CSW01-0814		8/1/2014	Wall	
TR-5TH-CSW02	TR-5TH-CSW02-0814		8/1/2014	Wall	
TR-5TH-CSW03	TR-5TH-CSW03-0814		8/1/2014	Wall	
TR-5TH-CSW04	TR-5TH-CSW04-0814		8/1/2014	Wall	
TR-5TH-CSW05	TR-5TH-CSW05-0814		8/1/2014	Wall	
TR-5TH-CSW06	TR-5TH-CSW06-0814		8/1/2014	Wall	
TR-5TH-CSW07	TR-5TH-CSW07-0814		8/1/2014	Wall	
TR-5TH-CSW08	TR-5TH-CSW08-0814		8/1/2014	Wall	
TR-5TH-CSW09	TR-5TH-CSW09-0814		8/1/2014	Wall	
TR-5TH-CSW10	TR-5TH-CSW10-0814		8/1/2014	Wall	
TR-5TH-CSW11	TR-5TH-CSW11-0814		8/1/2014	Wall	
TR-5TH-CSW12	TR-5TH-CSW12-0814		8/1/2014	Wall	
TR-5TH-CSW13	TR-5TH-CSW13-0814		8/1/2014	Wall	
TR-5TH-CSW14	TR-5TH-CSW14-0814		8/1/2014	Wall	
TR-5TH-CSW15	TR-5TH-CSW15-0814		8/1/2014	Wall	

Notes:

HMX - Octogen

PETN - Pentaerythritol

RDX - Cyclotrimethylenetrinitramine

SVOC - Semivolatile organic compound

VOC - Volatile organic compound

* Floor samples were collected along the base of the perimeter of the excavation extent. Wall samples were collected on the vertical surface along the perimeter of the excavation extent.

** Sample was not analyzed for TCL VOCs

*** Sample was not analyzed for Select SVOCs, Select Polychlorinated Biphenlys, Explosives residues, and Select Metals

TABLE 12

Surficial Aquifer Properties

TRDA Remedial Investigation Report

Harvey Point Defense Testing Activity

Hertford, North Carolina

Monitoring Well	Depth to Water (ft BTOC)[1]	Top of Casing Elevation (ft)	Water Elevation (ft)	Distance Apart (ft)	Hydraulic Gradient (ft/ft)	Geometric Mean Hydraulic Gradient (ft/ft)	Geometric Mean K (ft/day)[2]	Assumed Effective Porosity[3]	V_s (ft/day)
2nd Street Disposal Area									
TR-2ND-MW03	1.95	5.90	3.95	215	0.0008	0.0009	2.19	0.35	0.006
TR-2ND-MW07	5.26	9.03	3.77						
TR-2ND-MW04	2.17	6.24	4.07	135	0.0010				
TR-2ND-MW05	1.09	5.03	3.94						
5th Street Disposal Area									
TR-5TH-MW03	2.82	6.55	3.73	145	0.0012	0.0005	2.19	0.35	0.003
TR-5TH-MW05	5.07	8.62	3.55						
HPDTA-BG-MW01	3.01	6.62	3.61	310	0.0002				
TR-5TH-MW06	2.74	6.41	3.67						

Notes:

ft - feet

ft/ft - foot per foot

ft/day - feet per day

BTOC - below top of casing

K=hydraulic conductivity (ft/day)

V_s = seepage velocity (ft/day)

(1) Depth to water based on 02/17/2016 water level survey

(2) Hydraulic conductivity based on range for silty sand (1.2-4 ft/day); USDA Saturated Hydraulic Conductivity in Relation to Soil Texture http://www.nrcs.usda.gov/wps/portal/nrcs/detail/soils/survey/office/ssr10/tr/?cid=nrcs144p2_074846

(3) Assumed effective porosity respresents geometric mean of effective porosity range for silty sand (0.25-0.49); Soil Porosity Geotechdata.Info. http://www.geotechdata.info/parameter/soil-porosity.html

TABLE 13

Background Soil Sample Results Summary (Metals Only)

TRDA Remedial Investigation Report

Harvey Point Defense Testing Activity

Hertford, North Carolina

Sample ID	Minimum Detected Concentration	Maximum Detected Concentration (Background Value)	HPDTA-BG-SS01-0613	HPDTA-BG-SS02-0613	HPDTA-BG-SS03-0613	HPDTA-BG-SS04-0613	HPDTA-BG-SS05-0613	HPDTA-BG-SB01-0.5-01-0613	HPDTA-BG-SB01-04-06-0613	HPDTA-BG-SB02-0.5-01-0613	HPDTA-BG-SB02-03-05-0613
Sample Date			6/10/13	6/12/13	6/12/13	6/12/13	6/12/13	6/12/13	6/12/13	6/13/13	6/13/13
Sample Depth (ft bgs)			0.5 - 1	0.5 - 1	0.5 - 1	0.5 - 1	0.5 - 1	0.5 - 1	4 - 6	0.5 - 1	3 - 5
Chemical Name											
Total Metals (MG/KG)											
Aluminum	951	32,000	9,090	16,500	14,200	20,800	5,070	6,990	18,100	4,570	22,700
Antimony	ND	ND	2.1 U	1.57 U	1.62 U	1.23 U	1.49 U	1.45 U	1.73 U	1.93 U	1.49 U
Arsenic	1.2	3.74	3.46 J	2.24 J	2.75 J	3.59	1.83 J	2.4 J	3.74	3.44 J	3.12
Barium	3.08	134	89.9	71.4	65.6	133	47.2	43.3	51.9	7.89	65.3
Beryllium	0.064	0.636	0.404	0.406	0.321	0.636	0.208	0.268	0.374	0.115	0.45
Cadmium	0.039	0.878	0.878	0.0787 U	0.081 U	0.0613 U	0.115 J	0.483	0.0865 U	0.0967 U	0.0744 U
Calcium	158	3,600	3,600	1,810	886	1,320	1,720	1,390	1,020	627	454
Chromium	3.77	38.5	14	21.9	17.7	26.5	8.1	11	22.9	7.94	29
Chromium (hexavalent)	0.85	2.11	NS	NS	2.11	NS	NS	NS	NS	NS	1.48
Cobalt	0.328	4.64	3.07	3	3.04	4.21	1.53	1.96	3.21	0.328 J	3.68
Copper	0.604	441	441	5.38	4.82	7.24	6.01	21.6	8.35	1.44	9.14
Iron	1,680	14,100	6,450	8,140	8,680	10,100	3,680	5,120	8,500	7,390	9,790
Lead	1.53	47.9	47.9	8.09	6.13	11.3	23.4	46.5	6.02	4.09	6.67
Magnesium	103	2,600	1,200	1,520	1,120	1,400	629	725	2,120	184	2,310
Manganese	7.98	412	388	108	315	412	175	98.4	67.8	7.98	69.7
Mercury	0.006	0.037	NS	NS	0.019	NS	NS	NS	NS	NS	0.00609 J
Nickel	0.645	16.8	7.78	9.49	7.38	10.5	3.5	5.59	10.7	0.69 J	12.1
Potassium	87.5	765	389	450	317	438	233	268	717	265	676
Selenium	ND	ND	2.1 U	1.57 U	1.62 U	1.23 U	1.49 U	1.45 U	1.73 U	1.93 U	1.49 U
Silver	ND	ND	0.524 U	0.393 U	0.405 U	0.306 U	0.372 U	0.362 U	0.432 U	0.483 U	0.372 U
Sodium	8.36	136	38.7 J	55.1	83.8	56.2	24.3 J	24.9 J	59	8.36 J	102
Thallium	0.314	1.29	2.1 U	0.493 J	1.62 U	1.23 U	1.49 U	1.45 U	0.473 J	1.93 U	1.49 U
Vanadium	4.51	31.9	12	19.8	16.6	21.7	8.21	9.96	20.2	12.5	26.6
Zinc	2.5	87.3	87.3	19.8	13	17.1	22.5	60.7	18.8	4.34	22.1

Notes:

Shading indicates detection

bgs - below ground surface

J - Analyte present below the reporting limit

MG/KG - Milligrams per kilogram

ND - Not detected

NS - Not sampled

U - The material was analyzed for, but not detected

TABLE 13

Background Soil Sample Results Summary (Metals Only)

TRDA Remedial Investigation Report

Harvey Point Defense Testing Activity

Hertford, North Carolina

Sample ID	Minimum Detected Concentration	Maximum Detected Concentration (Background Value)	HPDTA-BG-SB03-0.5-01-0613	HPDTA-BG-SB03-04-06-0613	HPDTA-BG-SB04-0.5-01-0613	HPDTA-BG-SB04-03-05-0613	HPDTA-BG-SB05-0.5-01-0613	HPDTA-BG-SB05-06-08-0613
Sample Date			6/19/13	6/19/13	6/19/13	6/19/13	6/18/13	6/18/13
Sample Depth (ft bgs)			0.5 - 1	4 - 6	0.5 - 1	3 - 5	0.5 - 1	6 - 8
Chemical Name								
Total Metals (MG/KG)								
Aluminum	951	32,000	8,420	19,400	32,000	14,800	11,400	951
Antimony	ND	ND	1.44 U	1.77 U	1.72 U	1.61 U	1.11 U	1.57 U
Arsenic	1.2	3.74	2.05 J	2.65 J	2.6 J	3.09 J	1.83 J	1.2 J
Barium	3.08	134	41.7	53.5	134	45.2	49.9	3.08
Beryllium	0.064	0.636	0.275	0.44	0.593	0.338	0.291	0.0642 J
Cadmium	0.039	0.878	0.0722 U	0.0884 U	0.0862 U	0.0803 U	0.0557 U	0.0389 J
Calcium	158	3,600	722	535	1,630	576	810	158
Chromium	3.77	38.5	12.6	23.7	38.5	20.9	15	3.77
Chromium (hexavalent)	0.85	2.11	0.85	1.07	NS	NS	NS	NS
Cobalt	0.328	4.64	2	3.36	4.64	3.14	1.92	0.538 J
Copper	0.604	441	3.55	5.49	8.08	6.68	3.78	0.604 J
Iron	1,680	14,100	6,240	9,350	14,100	8,210	5,730	1,680
Lead	1.53	47.9	7.97	6.58	12.2	4.67	6.93	1.53 J
Magnesium	103	2,600	861	2,090	2,600	2,370	945	103
Manganese	7.98	412	131	70.9	114	66.2	94.2	12.7
Mercury	0.006	0.037	0.0281	0.00623 U	0.0366	0.00571 J	NS	NS
Nickel	0.645	16.8	4.94	10.4	16.8	10.4	6.14	0.645 J
Potassium	87.5	765	219	614	765	725	300	87.5
Selenium	ND	ND	1.44 U	1.77 U	1.72 U	1.61 U	1.11 U	1.57 U
Silver	ND	ND	0.361 U	0.442 U	0.431 U	0.401 U	0.279 U	0.393 U
Sodium	8.36	136	63.2	136	75	76.8	32.9	8.81 J
Thallium	0.314	1.29	1.44 U	0.519 J	1.29 J	0.489 J	0.314 J	1.57 U
Vanadium	4.51	31.9	13.6	23.5	31.9	21.4	13.7	4.51
Zinc	2.5	87.3	12.4	21.4	27.1	19.6	11.4	2.5

Notes:

Shading indicates detection

bgs - below ground surface

J - Analyte present below the reporting limit

MG/KG - Milligrams per kilogram

ND - Not detected

NS - Not sampled

U - The material was analyzed for, but not detected

TABLE 14

Background Groundwater Sample Results Summary (Metals Only)

TRDA Phase II RI Report

Harvey Point Defense Testing Activity

Hertford, North Carolina

Sample ID	Minimum Detected Concentration	Maximum Detected Concentration (Background Value)	HPDTA-BG-MW01-0613	HPDTA-BG-MW02-0613	HPDTA-BG-MW03-0613	HPDTA-BG-MW04-0613
Sample Date			6/21/2013	6/21/2013	6/21/2013	6/21/2013
Sample Depth (feet bgs)			7-27	7-27	7-27	7-27
Chemical Name						
Total Metals (µg/L)						
Aluminum	47	601	158	601	255	47.4 J
Antimony	ND	ND	0.44 U	0.44 U	0.44 U	0.44 U
Arsenic	ND	ND	10 U	10 U	10 U	10 U
Barium	4	34	34	3.93 J	4.22 J	7.8 J
Beryllium	0.0976	0.0976	0.37 U	0.37 U	0.0976 J	0.37 U
Cadmium	ND	ND	4 U	4 U	4 U	4 U
Calcium	6,000	29,000	29,000 D	6,000	8,420	6,100
Chromium	0.75	1.29	3 U	1.29 JQ	0.75 J	3 U
Cobalt	2	7	6.2	3.89	6.75	1.83
Copper	1	3	0.767 J	0.66 J	2.39	3.44
Iron	89	629	119	629	272	89
Lead	0.271	0.271	0.6 U	0.271 J	0.6 U	0.6 U
Magnesium	3,300	9,450	9,450	3,300	4,420	3,420
Manganese	81	367	367 D	80.6	260 D	120 D
Nickel	2	6	3.33	2.56	6.48	2.32 J
Potassium	844	1,870	1,870 J	1,120 J	1,070 J	844 J
Silver		NA	0.116 U	0.116 U	0.116 U	0.116 U
Sodium	11,400	23,400	11,400 D	17,000 D	23,400 D	17,600 D
Thallium		NA	0.23 U	0.23 U	0.23 U	0.23 U
Vanadium	1	1	0.716 J	1.24 Q	1.22	0.72 J
Zinc	3	8	7.42 J	4.55 JQ	7.65 J	2.75 J
Dissolved Metals (µg/L)						
Aluminum	7.2	15.2	15.2 J	8.63 JQ	25 U	7.16 J
Antimony	ND	ND	0.44 U	0.44 U	0.44 U	0.44 U
Arsenic	ND	ND	10 U	10 U	10 U	10 U
Barium	3.9	33.6	33.6	8 U	3.88 J	7.65 J
Beryllium	ND	ND	0.37 U	0.37 U	0.37 U	0.37 U
Cadmium	ND	ND	4 U	4 U	4 U	4 U
Calcium	5,890	28,600	28,600 D	5,890 Q	8,180	6,200
Chromium	ND	ND	3 U	3 U	3 U	3 U
Cobalt	2	6	6.13	3.54 Q	6.48	1.82
Copper	1	3	3.22	1.27 Q	1.1	0.891 J
Iron	6.6	51.2	12.1 J	15 U	6.63 J	51.2
Magnesium	3,200	9,190	9,190	3,200	4,440	3,410
Manganese	73	370	370 D	73.4	260 D	122 D
Nickel	2	6	3.32	2.13 JQ	6.16	2.37 J
Potassium	841	1,850	1,850 J	1,050 J	1,050 J	841 J
Silver	ND	ND	0.116 U	0.116 U	0.116 U	0.116 U
Sodium	11,900	23,400	11,900 D	16,000 D	23,400 D	16,800 D
Thallium	ND	ND	0.23 U	0.23 U	0.23 U	0.23 U
Vanadium	0.402	0.582	0.402 J	0.8 U	0.492 J	0.582 J
Zinc	2.9	7.22	7.22 J	2.9 J	7 J	4.33 J

Notes:

Shading indicates

ND - not detected

D - Compound identified in an analysis at a secondary dilution factor

bgs - below ground surface

J - Analyte present below the reporting limit

Q - One or more quality control criteria failed.

U - The material was analyzed for, but not detected

mg/L - Milligrams per

µg/L - Micrograms per

TABLE 15

Remaining Soil Samples Detections and Exceedances - 2nd Street Disposal Area

TRDA Remedial Investigation Report

Harvey Point Defense Testing Activity

Hertford, North Carolina

Sample ID	**Background Value[1]**	**Protection of Groundwater PSRG[2]**	**Residential Health-Based PSRG[2]**	2nd-4	TR-2ND-SS05-0613	TR-2ND-SB07-0.5-01-0613	TR-2ND-SB07-04-06-0613	TR-2ND-CSF01-1015	TR-2ND-CSF02-1015	TR-2ND-CSF03-1015	TR-2ND-CSF03D-1015	TR-2ND-CSF04-1015	TR-2ND-CSF05-1015
Sample Date				1/10/12	6/11/13	6/19/13	6/19/13	10/23/15	10/23/15	10/23/15	10/23/15	10/23/15	10/23/15
Sample Depth (feet bgs)				8-12	0.0-0.5/0.5-1[3]	0.5-1	4-6	floor	floor	floor	floor	floor	floor
Chemical Name													
Volatile Organic Compounds (mg/kg)													
2-Butanone	NA	NA[4]	5,400	0.00998 J	0.0029 U	0.0022 U	0.0025 U	0.00556 U	0.00606 U	0.00569 U	0.00582 U	0.00521 U	0.00544 U
Acetone	NA	NA[4]	12,000	0.0274 J	0.012 J	0.011 U	0.013 U	0.00865 J	0.00929 J	0.00879 J	0.0163 J	0.015 J	0.0105 J
Ethylbenzene	NA	NA[4]	5.8	0.00749 J	0.0012 U	0.0009 U	0.001 U	0.00278 U	0.00303 U	0.00284 U	0.00291 U	0.00261 U	0.00272 U
Methylene Chloride	NA	NA[4]	57	0.0024 J	0.0058 U	0.0044 U	0.0051 U	0.00556 U	0.00606 U	0.00569 U	0.00582 U	0.00521 U	0.00544 U
Semivolatile Organic Compounds (mg/kg)													
Benzo(a)anthracene	ND	NA[4]	0.16	NS	0.029 U	0.03 U	0.031 U	0.00314 J	0.00412 U	0.00401 U	0.00401 U	0.00391 U	0.0022 J
Benzo(a)pyrene	ND	NA[4]	0.016	NS	0.029 U	0.03 U	0.031 U	0.00288 J	0.00412 U	0.00401 U	0.00401 U	0.00391 U	0.004 U
Benzo(b)fluoranthene	ND	NA[4]	0.16	NS	0.029 U	0.03 U	0.031 U	0.00437 J	0.00412 U	0.00401 U	0.00401 U	0.00391 U	0.004 U
bis(2-Ethylhexyl)phthalate	NA	7.2	39	NS	0.12 U	0.51	0.12 U	NS	NS	NS	NS	NS	NS
Indeno(1,2,3-cd)pyrene	ND	NA[4]	0.16	NS	0.029 U	0.03 U	0.031 U	0.00273 J	0.00412 U	0.00401 U	0.00401 U	0.00391 U	0.004 U
Pesticide/Polychlorinated Biphenyls (mg/kg)													
Aroclor-1254	NA	NC	1	NS	0.084	0.1 P(	0.025 U	0.0103 U	0.0105 U	0.0104 U	0.0103 U	0.00995 U	0.0101 U
Aroclor-1260	NA	NC	1	NS	0.091	0.14	0.025 U	0.0103 U	0.0105 U	0.0104 U	0.0103 U	0.00995 U	0.0101 U
Total Metals (mg/kg)													
Aluminum	32,000	NC	15,000	**18,800**	11,500	13,000	**17,800**	NS	NS	NS	NS	NS	NS
Arsenic	3.74	NA[4]	0.68	**0.862**	**2.82 J**	**2.29 J**	**3.09**	**3.67**	**4.7**	**4.13**	**4.29**	**3.81**	**3.55**
Barium	134	NA[4]	3,000	60.3	68.6	63	69.5	NS	NS	NS	NS	NS	NS
Beryllium	0.64	NA[4]	32	0.0448 J	0.455	0.409	0.428	NS	NS	NS	NS	NS	NS
Cadmium	0.88	NA[4]	14	0.0336 J	0.0792 U	0.0665 U	0.0696 U	0.131 U	0.128 U	0.125 U	0.127 U	0.122 U	0.124 U
Calcium	3,600	NC	NC	1,010	1,090	576	594	NS	NS	NS	NS	NS	NS
Chromium	38.5	NA[4]	24,000	36.1	16.9	19.4	23.3	NS	NS	NS	NS	NS	NS
Cobalt	4.64	0.9	4.6	4.37	2.86	2.85	3.53	3.3	4.32	4.32	4.22	4.07	4.12
Copper	441	NA[4]	620	10.2	6.84	5.43	7.24	10.7	10.5	11.2	10.5	9.89	9.79
Iron	14,100	NA[4]	11,000	10,400	6,940	6,620	8,470	9,460	9,910	10,500	10,100	10,300	10,200
Lead	47.9	NA[4]	400	5.36	10.5	6.65	6.07	4.65 E	4.97	6.64	5.7	5.95	5.5
Magnesium	2,600	NC	NC	3,090	1,360	1,630	2,130	NS	NS	NS	NS	NS	NS
Manganese	412	65	360	89.3	298	189	124	87.9 N	88.4 N	91 N	92.7 N	91.1 N	81.8 N
Mercury	0.037	NA[4]	1.9	0.038	NS	0.0326	0.0271	0.0168 J	0.0337 U	0.0333 U	0.0286 J	0.0213 J	0.0246 J
Nickel	16.8	NA[4]	300	23.2	7.79	8.41	10.8	NS	NS	NS	NS	NS	NS
Potassium	765	NC	NC	1,240	403	579	732	NS	NS	NS	NS	NS	NS
Silver	ND	NA[4]	78	0.0224 J	0.396 U	0.333 U	0.348 U	0.131 MU	0.128 MU	0.125 MU	0.127 MU	0.122 MU	0.124 MU

TABLE 15

Remaining Soil Samples Detections and Exceedances - 2nd Street Disposal Area

TRDA Remedial Investigation Report

Harvey Point Defense Testing Activity

Hertford, North Carolina

Sample ID	**Background Value[1]**	**Protection of Groundwater PSRG[2]**	**Residential Health-Based PSRG[2]**	2nd-4	TR-2ND-SS05-0613	TR-2ND-SB07-0.5-01-0613	TR-2ND-SB07-04-06-0613	TR-2ND-CSF01-1015	TR-2ND-CSF02-1015	TR-2ND-CSF03-1015	TR-2ND-CSF03D-1015	TR-2ND-CSF04-1015	TR-2ND-CSF05-1015
Sample Date				1/10/12	6/11/13	6/19/13	6/19/13	10/23/15	10/23/15	10/23/15	10/23/15	10/23/15	10/23/15
Sample Depth (feet bgs)				8-12	0.0-0.5/0.5-1[3]	0.5-1	4-6	floor	floor	floor	floor	floor	floor
Chemical Name													
Sodium	136	NC	NC	85.2	41.4	55.6	76.3	NS	NS	NS	NS	NS	NS
Thallium	1.29	NA[4]	0.16	0.101 J	1.58 U	**0.489 J**	**0.542 J**	NS	NS	NS	NS	NS	NS
Vanadium	31.9	NA[4]	78	34.5	17.2	17.1	21.9	22.7	24.4	26.2	25.2	25.6	25.9
Zinc	87.3	NA[4]	4,600	27.2	25.7	17.4	20.4	22.6 EN	26.1 N	29.4 N	25.9 N	25.7 N	24.5 N

Notes:

[1] Values are from the maximum values for the background samples (Table 13)

[2] Values are from the Inactive Hazardous Sites Branch Preliminary Soil Remediation Goals (PSRG) Table (NCDEQ, September 2015). For carcinogenic PAHs without PSRG, the PSRG for benzo(a)pyrene was used. For non-carcinogenic PAHs without PSRG, the PSRG for pyrene was used. For PCBs, the unrestricted use residential/industrial PSRG of 1 mg/kg was used.

[3] Sample depth is 0.0 to 0.5 foot bgs for all analytes except VOCs, for which the sample depth is 0.5 to 1 foot bgs.

[4] Protection of Groundwater PSRG does not apply because chemical is not a COC in groundwater.

Underlined text indicates exceedance of the Protection of Groundwater PSRG criteria

Bold text indicates exceedance of Residential Health-Based PSRGs

Shading indicates detection.

Blue text indicates exceedance of maximum background value

bgs - below ground surface

D - Compound identified in an analysis at a secondary dilution factor

E - Concentration exceeds calibration range

J - Analyte present below the reporting limit

M - Sample matrix interfered with the quantitation of the analyte; DL/LOD/LOQ have been raised.

mg/kg - Milligrams per kilogram

N - MS/MSD accuracy and/or precision are outside acceptance limits

NA - Not applicable

NC - No criteria

ND - Non-detect

NS - Not sampled

P - Indicates a greater than 25% difference of detection between the primary and secondary column.

Q - One or more quality control criteria failed

U - The material was analyzed for, but not detected

Y - Potential negative bias due to an ICV or CCV exceedance

*The highest concentration of the parent sample and duplicate sample

TABLE 15

Remaining Soil Samples Detections and Exceedances - 2nd Street Disposal Area

TRDA Remedial Investigation Report

Harvey Point Defense Testing Activity

Hertford, North Carolina

Sample ID	Background Value[1]	Protection of Groundwater PSRG[2]	Residential Health-Based PSRG[2]	TR-2ND-CSF06-1015	TR-2ND-CSF07-1015	TR-2ND-CSF08-1015	TR-2ND-CSF09-1015	TR-2ND-CSF10-1015	TR-2ND-CSF10D-1015	TR-2ND-CSF11-1015	TR-2ND-CSF12-1015	TR-2ND-CSW01-1015	TR-2ND-CSW02-1015
Sample Date				10/23/15	10/23/15	10/23/15	10/23/15	10/23/15	10/23/15	10/23/15	10/23/15	10/23/15	10/23/15
Sample Depth (feet bgs)				floor	floor	floor	floor	floor	floor	floor	floor	wall	wall
Chemical Name													
Volatile Organic Compounds (mg/kg)													
2-Butanone	NA	NA[4]	5,400	0.00561 U	0.00566 U	0.00625 U	0.0062 U	0.00585 U	0.00618 U	0.00575 U	0.00563 U	0.00517 U	0.00537 U
Acetone	NA	NA[4]	12,000	0.00971 J	0.00852 J	0.00952 J	0.0117 J	0.0114 J	0.00962 J	0.00924 J	0.00819 J	0.00886 J	0.00829 YJ
Ethylbenzene	NA	NA[4]	5.8	0.00281 U	0.00283 U	0.00312 U	0.0031 U	0.00292 U	0.00309 U	0.00287 U	0.00281 U	0.00259 U	0.00268 U
Methylene Chloride	NA	NA[4]	57	0.00561 U	0.00566 U	0.00625 U	0.0062 U	0.00585 U	0.00618 U	0.00575 U	0.00563 U	0.00517 U	0.00537 U
Semivolatile Organic Compounds (mg/kg)													
Benzo(a)anthracene	ND	NA[4]	0.16	0.00411 U	0.00419 U	0.00414 U	0.00413 U	0.00407 U	0.00414 U	0.00406 U	0.00406 U	0.00407 U	0.00236 J
Benzo(a)pyrene	ND	NA[4]	0.016	0.00411 U	0.00419 U	0.00414 U	0.00413 U	0.00407 U	0.00414 U	0.00406 U	0.00406 U	0.00407 U	0.00408 U
Benzo(b)fluoranthene	ND	NA[4]	0.16	0.00411 U	0.00419 U	0.00414 U	0.00413 U	0.00407 U	0.00414 U	0.00406 U	0.00406 U	0.00407 U	0.00255 J
bis(2-Ethylhexyl)phthalate	NA	7.2	39	NS	NS	NS	NS	NS	NS	NS	NS	NS	NS
Indeno(1,2,3-cd)pyrene	ND	NA[4]	0.16	0.00411 U	0.00419 U	0.00414 U	0.00413 U	0.00407 U	0.00414 U	0.00406 U	0.00406 U	0.00407 U	0.00408 U
Pesticide/Polychlorinated Biphenyls (mg/kg)													
Aroclor-1254	NA	NC	1	0.0104 U	0.0101 U	0.00995 U	0.0102 U	0.0102 U	0.0104 U	0.0105 U	0.00981 U	0.0101 U	0.00997 U
Aroclor-1260	NA	NC	1	0.0104 U	0.0101 U	0.00995 U	0.0102 U	0.0102 U	0.0104 U	0.0105 U	0.00981 U	0.0101 U	0.00997 U
Total Metals (mg/kg)													
Aluminum	32,000	NC	15,000	NS	NS	NS	NS	NS	NS	NS	NS	NS	NS
Arsenic	3.74	NA[4]	0.68	4	**3.66**	**3.63**	4.3	4.26	3.96	3.89	4.21	4.66	4.06
Barium	134	NA[4]	3,000	NS	NS	NS	NS	NS	NS	NS	NS	NS	NS
Beryllium	0.64	NA[4]	32	NS	NS	NS	NS	NS	NS	NS	NS	NS	NS
Cadmium	0.88	NA[4]	14	0.129 U	0.126 U	0.126 U	0.127 U	0.127 U	0.124 U	0.128 U	0.124 U	0.124 U	0.124 U
Calcium	3,600	NC	NC	NS	NS	NS	NS	NS	NS	NS	NS	NS	NS
Chromium	38.5	NA[4]	24,000	NS	NS	NS	NS	NS	NS	NS	NS	NS	NS
Cobalt	4.64	0.9	4.6	4.11	3.96	4.28	4.24	4.15	4.21	3.99	4.58	2.89	4.5
Copper	441	NA[4]	620	13.8	10	10.2	9.61	9.96	9.72	9.7	11	7.67	11.8
Iron	14,100	NA[4]	11,000	10,200	9,430	10,100	10,500	10,500	10,000	9,650	**11,700**	9,440	**12,000**
Lead	47.9	NA[4]	400	5.79	5.21	5.73	5.45	6.14	5.89	5.51	6.99	4.03 E	7.38
Magnesium	2,600	NC	NC	NS	NS	NS	NS	NS	NS	NS	NS	NS	NS
Manganese	412	65	360	82.7 N	91.3 N	91.9 N	86 N	89 N	81.8 N	80 N	87 N	79.2 N	89.2 N
Mercury	0.037	NA[4]	1.9	0.0302 J	0.022 J	0.0221 J	0.0201 J	0.0429 J	0.0371 J	0.029 J	0.0215 J	0.0314 U	0.0235 J
Nickel	16.8	NA[4]	300	NS	NS	NS	NS	NS	NS	NS	NS	NS	NS
Potassium	765	NC	NC	NS	NS	NS	NS	NS	NS	NS	NS	NS	NS
Silver	ND	NA[4]	78	0.129 U	0.126 MU	0.126 MU	0.127 MU	0.127 MU	0.124 U	0.128 MU	0.124 MU	0.124 MU	0.124 MU

TABLE 15

Remaining Soil Samples Detections and Exceedances - 2nd Street Disposal Area

TRDA Remedial Investigation Report

Harvey Point Defense Testing Activity

Hertford, North Carolina

Sample ID	**Background Value[1]**	**Protection of Groundwater PSRG[2]**	**Residential Health-Based PSRG[2]**	TR-2ND-CSF06-1015	TR-2ND-CSF07-1015	TR-2ND-CSF08-1015	TR-2ND-CSF09-1015	TR-2ND-CSF10-1015	TR-2ND-CSF10D-1015	TR-2ND-CSF11-1015	TR-2ND-CSF12-1015	TR-2ND-CSW01-1015	TR-2ND-CSW02-1015
Sample Date				10/23/15	10/23/15	10/23/15	10/23/15	10/23/15	10/23/15	10/23/15	10/23/15	10/23/15	10/23/15
Sample Depth (feet bgs)				floor	floor	floor	floor	floor	floor	floor	floor	wall	wall
Chemical Name													
Sodium	136	NC	NC	NS	NS	NS	NS	NS	NS	NS	NS	NS	NS
Thallium	1.29	NA[4]	0.16	NS	NS	NS	NS	NS	NS	NS	NS	NS	NS
Vanadium	31.9	NA[4]	78	25.1	24.8	25.3	25	26.2	25.1	24.3	29.6	23.8	30
Zinc	87.3	NA[4]	4,600	26.3 N	23.7 N	26.4 N	25 N	24.6 N	25.6 N	24.3 N	33.1 N	17.5 EN	27.3 N

Notes:

[1] Values are from the maximum values for the background samples (Table 13)

[2] Values are from the Inactive Hazardous Sites Branch Preliminary Soil Remediation Goals (PSRG) Table (NCDEQ, September 2015). For carcinogenic PAHs without PSRG, the PSRG for benzo(a)pyrene was used. For non-carcinogenic PAHs without PSRG, the PSRG for pyrene was used. For PCBs, the unrestricted use residential/industrial PSRG of 1 mg/kg was used.

[3] Sample depth is 0.0 to 0.5 foot bgs for all analytes except VOCs, for which the sample depth is 0.5 to 1 foot bgs.

[4] Protection of Groundwater PSRG does not apply because chemical is not a COC in groundwater.

Underlined text indicates exceedance of the Protection of Groundwater PSRG criteria

Bold text indicates exceedance of Residential Health-Based PSRGs

Shading indicates detection.

Blue text indicates exceedance of maximum background value

bgs - below ground surface

D - Compound identified in an analysis at a secondary dilution factor

E - Concentration exceeds calibration range

J - Analyte present below the reporting limit

M - Sample matrix interfered with the quantitation of the analyte; DL/LOD/LOQ have been raised.

mg/kg - Milligrams per kilogram

N - MS/MSD accuracy and/or precision are outside acceptance limits

NA - Not applicable

NC - No criteria

ND - Non-detect

NS - Not sampled

P - Indicates a greater than 25% difference of detection between the primary and secondary column.

Q - One or more quality control criteria failed

U - The material was analyzed for, but not detected

Y - Potential negative bias due to an ICV or CCV exceedance

*The highest concentration of the parent sample and duplicate sample

TABLE 15

Remaining Soil Samples Detections and Exceedances - 2nd Street Disposal Area

TRDA Remedial Investigation Report

Harvey Point Defense Testing Activity

Hertford, North Carolina

Sample ID	Background Value[1]	Protection of Groundwater PSRG[2]	Residential Health-Based PSRG[2]	TR-2ND-CSW02D-1015	TR-2ND-CSW03-1015	TR-2ND-CSW04-1015	TR-2ND-CSW05-1015	TR-2ND-CSW06-1015	TR-2ND-CSW07-1015	TR-2ND-CSW08-1015	TR-2ND-CSW09-1015
Sample Date				10/23/15	10/23/15	10/23/15	10/23/15	10/23/15	10/23/15	10/23/15	10/23/15
Sample Depth (feet bgs)				wall	wall	wall	wall	wall	wall	wall	wall
Chemical Name											
Volatile Organic Compounds (mg/kg)											
2-Butanone	NA	NA[4]	5,400	0.00551 U	0.00538 U	0.00509 U	0.00559 U	0.00556 U	0.00559 U	0.00679 U	0.00561 U
Acetone	NA	NA[4]	12,000	0.0107 YJ	0.00834 YJ	0.00946 YJ	0.0107 YJ	0.0114 YJ	0.00937 YJ	0.01 YJ	0.0101 YJ
Ethylbenzene	NA	NA[4]	5.8	0.00275 U	0.00269 U	0.00255 U	0.00279 U	0.00278 U	0.00279 U	0.00339 U	0.0028 U
Methylene Chloride	NA	NA[4]	57	0.00551 U	0.00538 U	0.00509 U	0.00559 U	0.00556 U	0.00559 U	0.00679 U	0.00561 U
Semivolatile Organic Compounds (mg/kg)											
Benzo(a)anthracene	ND	NA[4]	0.16	0.00411 U	0.00401 U	0.0026 J	0.00416 U	0.004 U	0.00396 U	0.00432 U	0.00405 U
Benzo(a)pyrene	ND	NA[4]	0.016	0.00411 U	0.00401 U	0.004 U	0.00416 U	0.004 U	0.00396 U	0.00432 U	0.00405 U
Benzo(b)fluoranthene	ND	NA[4]	0.16	0.00411 U	0.00401 U	0.00328 J	0.00416 U	0.004 U	0.00396 U	0.00432 U	0.00405 U
bis(2-Ethylhexyl)phthalate	NA	7.2	39	NS	NS	NS	NS	NS	NS	NS	NS
Indeno(1,2,3-cd)pyrene	ND	NA[4]	0.16	0.00411 U	0.00401 U	0.00237 J	0.00416 U	0.004 U	0.00396 U	0.00432 U	0.00405 U
Pesticide/Polychlorinated Biphenyls (mg/kg)											
Aroclor-1254	NA	NC	1	0.0101 U	0.00981 U	0.0102 U	0.0101 U	0.0101 U	0.0102 U	0.0105 U	0.0104 U
Aroclor-1260	NA	NC	1	0.0101 U	0.00981 U	0.0102 U	0.0101 U	0.0101 U	0.0102 U	0.0105 U	0.0104 U
Total Metals (mg/kg)											
Aluminum	32,000	NC	15,000	NS	NS	NS	NS	NS	NS	NS	NS
Arsenic	3.74	NA[4]	0.68	**5.49**	**5**	**4.3**	**3.35**	**4.24**	**4.64**	**4.37**	**4.38**
Barium	134	NA[4]	3,000	NS	NS	NS	NS	NS	NS	NS	NS
Beryllium	0.64	NA[4]	32	NS	NS	NS	NS	NS	NS	NS	NS
Cadmium	0.88	NA[4]	14	0.129 U	0.123 U	0.126 U	0.131 U	0.13 U	0.128 U	0.132 U	0.13 U
Calcium	3,600	NC	NC	NS	NS	NS	NS	NS	NS	NS	NS
Chromium	38.5	NA[4]	24,000	NS	NS	NS	NS	NS	NS	NS	NS
Cobalt	4.64	0.9	4.6	4.45	4.31	4.14	**4.78**	4.13	4.24	4.24	4.06
Copper	441	NA[4]	620	9.58	10.1	10.6	12	10.4	9.75	9.58	10.1
Iron	14,100	NA[4]	11,000	10,900	11,000	10,300	**12,000**	10,000	9,690	9,700	9,740
Lead	47.9	NA[4]	400	5.42	5.67	6.37	7.51	5.87	4.63	4.95	4.98
Magnesium	2,600	NC	NC	NS	NS	NS	NS	NS	NS	NS	NS
Manganese	412	65	360	81.5 N	81.8 N	81.5 N	107 N	92.6 N	90.3 N	88.7 N	85.6 N
Mercury	0.037	NA[4]	1.9	0.0211 J	0.0231 J	0.0773	0.036 J	0.0374 J	0.0353 U	0.0185 J	0.0182 J
Nickel	16.8	NA[4]	300	NS	NS	NS	NS	NS	NS	NS	NS
Potassium	765	NC	NC	NS	NS	NS	NS	NS	NS	NS	NS
Silver	ND	NA[4]	78	0.129 MU	0.123 MU	0.126 MU	0.131 MU	0.13 MU	0.128 MU	0.132 MU	0.13 MU

TABLE 15

Remaining Soil Samples Detections and Exceedances - 2nd Street Disposal Area

TRDA Remedial Investigation Report

Harvey Point Defense Testing Activity

Hertford, North Carolina

Sample ID	**Background Value[1]**	**Protection of Groundwater PSRG[2]**	**Residential Health-Based PSRG[2]**	TR-2ND-CSW02D-1015	TR-2ND-CSW03-1015	TR-2ND-CSW04-1015	TR-2ND-CSW05-1015	TR-2ND-CSW06-1015	TR-2ND-CSW07-1015	TR-2ND-CSW08-1015	TR-2ND-CSW09-1015
Sample Date				10/23/15	10/23/15	10/23/15	10/23/15	10/23/15	10/23/15	10/23/15	10/23/15
Sample Depth (feet bgs)				wall	wall	wall	wall	wall	wall	wall	wall
Chemical Name											
Sodium	136	NC	NC	NS	NS	NS	NS	NS	NS	NS	NS
Thallium	1.29	NA[4]	0.16	NS	NS	NS	NS	NS	NS	NS	NS
Vanadium	31.9	NA[4]	78	26.6	27.2	25.7	29.6	25.5	23.6	23.4	23.4
Zinc	87.3	NA[4]	4,600	25.5 N	25.5 N	26.9 N	33.4 N	32.8 N	24 N	25 N	25.6 N

Notes:

[1] Values are from the maximum values for the background samples (Table 13)

[2] Values are from the Inactive Hazardous Sites Branch Preliminary Soil Remediation Goals (PSRG) Table (NCDEQ, September 2015). For carcinogenic PAHs without PSRG, the PSRG for benzo(a)pyrene was used. For non-carcinogenic PAHs without PSRG, the PSRG for pyrene was used. For PCBs, the unrestricted use residential/industrial PSRG of 1 mg/kg was used.

[3] Sample depth is 0.0 to 0.5 foot bgs for all analytes except VOCs, for which the sample depth is 0.5 to 1 foot bgs.

[4] Protection of Groundwater PSRG does not apply because chemical is not a COC in groundwater.

Underlined text indicates exceedance of the Protection of Groundwater PSRG criteria

Bold text indicates exceedance of Residential Health-Based PSRGs

Shading indicates detection.

Blue text indicates exceedance of maximum background value

bgs - below ground surface

D - Compound identified in an analysis at a secondary dilution factor

E - Concentration exceeds calibration range

J - Analyte present below the reporting limit

M - Sample matrix interfered with the quantitation of the analyte; DL/LOD/LOQ have been raised.

mg/kg - Milligrams per kilogram

N - MS/MSD accuracy and/or precision are outside acceptance limits

NA - Not applicable

NC - No criteria

ND - Non-detect

NS - Not sampled

P - Indicates a greater than 25% difference of detection between the primary and secondary column.

Q - One or more quality control criteria failed

U - The material was analyzed for, but not detected

Y - Potential negative bias due to an ICV or CCV exceedance

*The highest concentration of the parent sample and duplicate sample

TABLE 16

Groundwater Samples Detections and Exceedances - 2nd Street Disposal Area

TRDA Remedial Investigation Report

Harvey Point Defense Testing Activity

Hertford, North Carolina

Sample ID	Criteria	Source	Background Value[1]	2nd-1	2nd-2	2nd-3	2nd-4	TR-2ND-SB04-GW-0613	TR-2ND-SB06-GW-0613	TR-2ND-SB07-GW-0613	TR-2ND-GW01-10-14-0116	TR-2ND-GW02-12-16-0116	TR-2ND-GW03-11-15-0116
Sample Type				Grab	Grab	Grab	Grab	Grab	Grab	Grab	Grab	Grab	Grab
Sample Date				1/10/12	1/10/12	1/10/12	1/10/12	6/19/13	6/19/13	6/19/13	1/14/16	1/19/16	1/15/16
Chemical Name													
Volatile Organic Compounds (UG/L)													
1,1,2-Trichloro-1,2,2-trifluoroethane (Freon-113)	200000	NC2LGW	NA	NS	NS	NS	NS	1 U	1 U	1 U	2 U	1 U	2 U
1,1-Dichloroethane	6	NC2LGW	NA	0.210 J	ND	ND	ND	1 U	1 U	1 U	1 U	0.5 U	1 U
1,2,3-Trichlorobenzene	NC	NA	NA	ND	ND	ND	ND	2.2 Q	1 U	1 U	1 U	0.5 U	1 U
1,2,4-Trichlorobenzene	70	NA	NA	ND	ND	ND	ND	6.4 Q	1 U	1 U	1 U	0.5 U	1 U
Acetone	6000	NC2LGW	NA	1.55 J	2.15 J	1.63 J	1.34 J	12 U	12 U	12 U	10 QU	12.3 Q	7.91 QDJ
Dichlorodifluoromethane (Freon-12)	1000	NC2LGW	NA	ND	ND	4.50 J	ND	1 U	1 U	1 U	2 U	1.37 J	2 U
Isopropylbenzene	70	NC2LGW	NA	0.110 J	ND	ND	ND	1 U	1 U	1 U	1 U	0.5 U	1 U
Methane	NC	NA	NA	ND	ND	ND	ND	NS	NS	NS			
Methylene chloride	5	NC2LGW	NA	0.540 J	0.680 J	0.550 J	0.690 J	5 U	5 U	5 U	2 U	1 U	2 U
Methyl-tert-butyl ether (MTBE)	20	NC2LGW	NA	1.03	ND	ND	ND	1 U	1 U	1 U	1 U	0.5 U	1 U
Tetrachloroethene	0.7	NC2LGW	NA	ND	ND	ND	ND	1 U	1 U	1 U	0.4 U	0.2 U	0.4 U
Toluene	600	NC2LGW	NA					1 U	1 U	1 U	1 U	0.5 U	1 U
Trichlorofluoromethane (Freon-11)	2000	NC2LGW	NA	ND	ND	0.680 J	ND	1 U	1 U	1 U	2 U	1 U	2 U
Vinyl Chloride	0.03	NC2LGW	NA	ND	ND	**0.180 J**	ND	1 U	1 U	1 U	1 U	0.5 U	1 U
Semivolatile Organic Compounds (UG/L)													
Bis(2-ethylhexyl)phthalate	3	NC2LGW	NA	NS	NS	NS	NS	**22**	6 U	**8.9 J**	NS	NS	NS
Explosives (UG/L)													
3-Nitrotoluene	NC	NA	NA	NS	NS	NS	NS	NS	NS	NS	NS	NS	NS
HMX	NC	NA	NA	NS	NS	NS	NS	NS	NS	NS	NS	NS	NS
Nitrobenzene	NC	NA	NA	NS	NS	NS	NS	NS	NS	NS	NS	NS	NS
RDX	NC	NA	NA	NS	NS	NS	NS	NS	NS	NS	NS	NS	NS
Total Metals (UG/L)													
Aluminum	NC	NA	601	NR	NR	NR	NR	NS	NS	NS	NS	NS	NS
Antimony	1	NC GW-IMAC	ND	NR	NR	NR	NR	NS	NS	NS	NS	NS	NS
Arsenic	10	NC2LGW	ND	NR	NR	NR	NR	NS	NS	NS	NS	NS	NS
Barium	700	NC2LGW	34	NR	NR	NR	NR	NS	NS	NS	NS	NS	NS
Calcium	NA	NA	29,000	NR	NR	NR	NR	NS	NS	NS	NS	NS	NS
Chromium	10	NC2LGW	1.29	NR	NR	NR	NR	NS	NS	NS	NS	NS	NS
Cobalt	1	NC GW-IMAC	6.75	NR	NR	NR	NR	NS	NS	NS	NS	NS	NS
Copper	1,000	NC2LGW	3.44	NR	NR	NR	NR	NS	NS	NS	NS	NS	NS
Iron	300	NC2LGW	629	NR	NR	NR	NR	NS	NS	NS	NS	NS	NS
Lead	15	NC2LGW	0.271	NR	NR	NR	NR	NS	NS	NS	NS	NS	NS
Magnesium	NC	NA	9,450	NR	NR	NR	NR	NS	NS	NS	NS	NS	NS
Manganese	50	NC2LGW	367	NR	NR	NR	NR	NS	NS	NS	NS	NS	NS
Nickel	100	NC2LGW	6.48	NR	NR	NR	NR	NS	NS	NS	NS	NS	NS
Potassium	NC	NA	1,870	NR	NR	NR	NR	NS	NS	NS	NS	NS	NS
Sodium	NC	NA	23,400	NR	NR	NR	NR	NS	NS	NS	NS	NS	NS
Vanadium	0.3	NC GW-IMAC	1.24	NR	NR	NR	NR	NS	NS	NS	NS	NS	NS
Zinc	1000	NC2LGW	7.65	NR	NR	NR	NR	NS	NS	NS	NS	NS	NS

TABLE 16

Groundwater Samples Detections and Exceedances - 2nd Street Disposal Area

TRDA Remedial Investigation Report

Harvey Point Defense Testing Activity

Hertford, North Carolina

Sample ID	**Criteria**	**Source**	**Background Value[1]**	2nd-1	2nd-2	2nd-3	2nd-4	TR-2ND-SB04-GW-0613	TR-2ND-SB06-GW-0613	TR-2ND-SB07-GW-0613	TR-2ND-GW01-10-14-0116	TR-2ND-GW02-12-16-0116	TR-2ND-GW03-11-15-0116
Sample Type				Grab	Grab	Grab	Grab	Grab	Grab	Grab	Grab	Grab	Grab
Sample Date				1/10/12	1/10/12	1/10/12	1/10/12	6/19/13	6/19/13	6/19/13	1/14/16	1/19/16	1/15/16
Chemical Name													
Wet Chemistry (UG/L)													
Alkalinity	NC	NA	NA	NS	NS	NS	NS	NS	NS	NS	NS	NS	NS
Methane	NC	NA	NA	NS	NS	NS	NS	NS	NS	NS	NS	NS	NS
Nitrate	10000	NC2LGW	NA	NS	NS	NS	NS	NS	NS	NS	NS	NS	NS
Sulfate	250000	NC2LGW	NA	NS	NS	NS	NS	NS	NS	NS	NS	NS	NS
Total Organic Carbon (TOC)	NC	NA	NA	NS	NS	NS	NS	NS	NS	NS	NS	NS	NS

Notes:

[1] Values are from the maximum values for the background samples (Table 14)

Shading indicates detection

Bold text indicates exceedance of the NC2LGW or NC GW-IMAC

Blue text indicates exceedance of maximum background value

B - Analyte also detected in an associated laboratory blank

D - Compound identified in an analysis at a secondary dilution factor

J - Analyte present. Value may or may not be accurate or precise

N - The MS/MSD accuracy and/or precision are outside criteria

NA - Not available

NC - No criteria

NR - Not Reported. 2012 groundwater samples, collected from temporary sample points by others, excluded from this report due to data uncertainty associated with the sample method of collecting metals data from a geoprobe rig. The results were noticeably higher in those DPT points than in the metals samples collected from the monitoring wells.

NS - Not sampled

P - Estimated result. There is greater than a 40% difference between the two GC columns for the detected concentrations.

Q -The relative percent difference (RPD) and/or percent recovery exceeded limits in the associated Blank Spike and/or Blank Spike Duplicate.

U - The material was analyzed for, but not detected

mg/L - Milligrams per liter

UG/L - Micrograms per liter

TABLE 16

Groundwater Samples Detections and Exceedances - 2nd Street Disposal Area

TRDA Remedial Investigation Report

Harvey Point Defense Testing Activity

Hertford, North Carolina

Sample ID	Criteria	Source	Background Value[1]	TR-2ND-GW03-25-29-0116	TR-2ND-GW04-10-14-0116	TR-2ND-GW05-15-19-0116	TR-2ND-GW05-25-29-0116	TR-2ND-GW05D-25-29-0116	TR-2ND-GW06-11-15-0116	TR-2ND-GW07-11-15-0116
Sample Type				Grab	Grab	Grab	Grab	Grab	Grab	Grab
Sample Date				1/15/16	1/14/16	1/15/16	1/15/16	1/15/16	1/19/16	1/19/16
Chemical Name										
Volatile Organic Compounds (UG/L)										
1,1,2-Trichloro-1,2,2-trifluoroethane (Freon-113)	200000	NC2LGW	NA	4.22 D	2 U	2 U	1 U	1 U	1 U	1 U
1,1-Dichloroethane	6	NC2LGW	NA	1 U	1 U	1 U	0.5 U	0.5 U	0.5 U	0.5 U
1,2,3-Trichlorobenzene	NC	NA	NA	1 U	1 U	1 U	0.5 U	0.5 U	0.5 U	0.5 U
1,2,4-Trichlorobenzene	70	NA	NA	1 U	1 U	1 U	0.5 U	0.5 U	0.5 U	0.5 U
Acetone	6000	NC2LGW	NA	10 QU	10 QU	10 Q	5 QU	5 QU	9.86 QJ	5.57 QJ
Dichlorodifluoromethane (Freon-12)	1000	NC2LGW	NA	43.3 D	2 U	108 D	35	35.2	1 U	1 U
Isopropylbenzene	70	NC2LGW	NA	1 U	1 U	1 U	0.5 U	0.5 U	0.338 J	0.5 U
Methane	NC	NA	NA							
Methylene chloride	5	NC2LGW	NA	2 U	2 U	2 U	1 U	1 U	1 U	1 U
Methyl-tert-butyl ether (MTBE)	20	NC2LGW	NA	1 U	1 U	1 U	0.5 U	0.5 U	0.5 U	0.5 U
Tetrachloroethene	0.7	NC2LGW	NA	**0.804 DJ**	0.4 U	**2.16 D**	0.397 J	0.454 J	0.2 U	0.2 U
Toluene	600	NC2LGW	NA	1 U	1 U	1 U	0.5 U	0.5 U	0.5 U	0.5 U
Trichlorofluoromethane (Freon-11)	2000	NC2LGW	NA	67.3 D	2 U	516 D	144	145	1 U	1 U
Vinyl Chloride	0.03	NC2LGW	NA	1 U	1 U	1 U	0.5 U	0.5 U	0.5 U	0.5 U
Semivolatile Organic Compounds (UG/L)										
Bis(2-ethylhexyl)phthalate	3	NC2LGW	NA	NS	NS	NS	NS	NS	NS	NS
Explosives (UG/L)										
3-Nitrotoluene	NC	NA	NA	NS	NS	NS	NS	NS	NS	NS
HMX	NC	NA	NA	NS	NS	NS	NS	NS	NS	NS
Nitrobenzene	NC	NA	NA	NS	NS	NS	NS	NS	NS	NS
RDX	NC	NA	NA	NS	NS	NS	NS	NS	NS	NS
Total Metals (UG/L)										
Aluminum	NC	NA	601	NS	NS	NS	NS	NS	NS	NS
Antimony	1	NC GW-IMAC	ND	NS	NS	NS	NS	NS	NS	NS
Arsenic	10	NC2LGW	ND	NS	NS	NS	NS	NS	NS	NS
Barium	700	NC2LGW	34	NS	NS	NS	NS	NS	NS	NS
Calcium	NA	NA	29,000	NS	NS	NS	NS	NS	NS	NS
Chromium	10	NC2LGW	1.29	NS	NS	NS	NS	NS	NS	NS
Cobalt	1	NC GW-IMAC	6.75	NS	NS	NS	NS	NS	NS	NS
Copper	1,000	NC2LGW	3.44	NS	NS	NS	NS	NS	NS	NS
Iron	300	NC2LGW	629	NS	NS	NS	NS	NS	NS	NS
Lead	15	NC2LGW	0.271	NS	NS	NS	NS	NS	NS	NS
Magnesium	NC	NA	9,450	NS	NS	NS	NS	NS	NS	NS
Manganese	50	NC2LGW	367	NS	NS	NS	NS	NS	NS	NS
Nickel	100	NC2LGW	6.48	NS	NS	NS	NS	NS	NS	NS
Potassium	NC	NA	1,870	NS	NS	NS	NS	NS	NS	NS
Sodium	NC	NA	23,400	NS	NS	NS	NS	NS	NS	NS
Vanadium	0.3	NC GW-IMAC	1.24	NS	NS	NS	NS	NS	NS	NS
Zinc	1000	NC2LGW	7.65	NS	NS	NS	NS	NS	NS	NS

TABLE 16

Groundwater Samples Detections and Exceedances - 2nd Street Disposal Area

TRDA Remedial Investigation Report

Harvey Point Defense Testing Activity

Hertford, North Carolina

Sample ID	**Criteria**	**Source**	**Background Value[1]**	TR-2ND-GW03-25-29-0116	TR-2ND-GW04-10-14-0116	TR-2ND-GW05-15-19-0116	TR-2ND-GW05-25-29-0116	TR-2ND-GW05D-25-29-0116	TR-2ND-GW06-11-15-0116	TR-2ND-GW07-11-15-0116
Sample Type				Grab	Grab	Grab	Grab	Grab	Grab	Grab
Sample Date				1/15/16	1/14/16	1/15/16	1/15/16	1/15/16	1/19/16	1/19/16
Chemical Name										
Wet Chemistry (UG/L)										
Alkalinity	NC	NA	NA	NS	NS	NS	NS	NS	NS	NS
Methane	NC	NA	NA	NS	NS	NS	NS	NS	NS	NS
Nitrate	10000	NC2LGW	NA	NS	NS	NS	NS	NS	NS	NS
Sulfate	250000	NC2LGW	NA	NS	NS	NS	NS	NS	NS	NS
Total Organic Carbon (TOC)	NC	NA	NA	NS	NS	NS	NS	NS	NS	NS

Notes:

[1] Values are from the maximum values for the background samples (Table 14)

Shading indicates detection

Bold text indicates exceedance of the NC2LGW or NC GW-IMAC

Blue text indicates exceedance of maximum background value

B - Analyte also detected in an associated laboratory blank

D - Compound identified in an analysis at a secondary dilution factor

J - Analyte present. Value may or may not be accurate or precise

N - The MS/MSD accuracy and/or precision are outside criteria

NA - Not available

NC - No criteria

NR - Not Reported. 2012 groundwater samples, collected from temporary sample points by others, excluded from this report due to data uncertainty associated with the sample method of collecting metals data from a geoprobe rig. The results were noticeably higher in those DPT points than in the metals samples collected from the monitoring wells.

NS - Not sampled

P - Estimated result. There is greater than a 40% difference between the two GC columns for the detected concentrations.

Q -The relative percent difference (RPD) and/or percent recovery exceeded limits in the associated Blank Spike and/or Blank Spike Duplicate.

U - The material was analyzed for, but not detected

mg/L - Milligrams per liter

UG/L - Micrograms per liter

TABLE 16

Groundwater Samples Detections and Exceedances - 2nd Street Disposal Area

TRDA Remedial Investigation Report

Harvey Point Defense Testing Activity

Hertford, North Carolina

Sample ID	Criteria	Source	Background Value[1]	TR-2ND-GW08-11-15-0116	TR-2ND-GW08-25-29-0116	TR-2ND-GW09-12-16-0116	TR-2ND-GW09D-12-16-0116	TR-2ND-GW11-10-14-0116	TR-2ND-GW11-25-29-0116	TR-2ND-MW01-0613	TR-2ND-MW02-0613
Sample Type				Grab	Grab	Grab	Grab	Grab	Grab	Monitoring Well	Monitoring Well
Sample Date				1/19/16	1/19/16	1/19/16	1/19/16	1/20/16	1/20/16	6/20/13	6/20/13
Chemical Name											
Volatile Organic Compounds (UG/L)											
1,1,2-Trichloro-1,2,2-trifluoroethane (Freon-113)	200000	NC2LGW	NA	1 U	10.9	1.09 J	1.51 J	2 U	25.1	69	1 U
1,1-Dichloroethane	6	NC2LGW	NA	0.5 U	0.5 U	0.5 U	0.5 U	1 U	0.5 U	1 U	1 U
1,2,3-Trichlorobenzene	NC	NA	NA	0.5 U	0.5 U	0.5 U	0.5 U	1 U	0.5 U	1 U	1 U
1,2,4-Trichlorobenzene	70	NA	NA	0.5 U	0.5 U	0.5 U	0.5 U	1 U	0.5 U	1 U	1 U
Acetone	6000	NC2LGW	NA	5 QU	5 Q	8.72 QJ	11 Q	15 QDJ	5 Q	12 U	12 U
Dichlorodifluoromethane (Freon-12)	1000	NC2LGW	NA	1 U	68.3	8.53	15	26.6 D	175	140	12
Isopropylbenzene	70	NC2LGW	NA	0.5 U	0.5 U	0.5 U	0.5 U	1 U	0.5 U	1 U	1 U
Methane	NC	NA	NA							25.7	6.58
Methylene chloride	5	NC2LGW	NA	1 U	1 U	1 U	1 U	2 U	1 U	5 U	5 U
Methyl-tert-butyl ether (MTBE)	20	NC2LGW	NA	0.5 U	0.5 U	0.5 U	0.5 U	1 U	0.5 U	1 U	1 U
Tetrachloroethene	0.7	NC2LGW	NA	0.2 U	0.348 J	0.2 U	0.2 U	0.4 U	**3.18**	**2.3**	1 U
Toluene	600	NC2LGW	NA	0.5 U	0.5 U	1.81	1.49	1 U	0.5 U	1 U	1 U
Trichlorofluoromethane (Freon-11)	2000	NC2LGW	NA	1 U	99.5	16.3	28.6	6.2 D	298 D	580 D	18
Vinyl Chloride	0.03	NC2LGW	NA	0.5 U	0.5 U	0.5 U	0.5 U	1 U	0.5 U	1 U	1 U
Semivolatile Organic Compounds (UG/L)											
Bis(2-ethylhexyl)phthalate	3	NC2LGW	NA	NS	NS	NS	NS	NS	NS	6 U	6 U
Explosives (UG/L)											
3-Nitrotoluene	NC	NA	NA	NS	NS	NS	NS	NS	NS	NS	NS
HMX	NC	NA	NA	NS	NS	NS	NS	NS	NS	NS	NS
Nitrobenzene	NC	NA	NA	NS	NS	NS	NS	NS	NS	NS	NS
RDX	NC	NA	NA	NS	NS	NS	NS	NS	NS	NS	NS
Total Metals (UG/L)											
Aluminum	NC	NA	601	NS	NS	NS	NS	NS	NS	204	328 Q
Antimony	1	NC GW-IMAC	ND	NS	NS	NS	NS	NS	NS	0.122 J	0.44 U
Arsenic	10	NC2LGW	ND	NS	NS	NS	NS	NS	NS	0.895 J	10 U
Barium	700	NC2LGW	34	NS	NS	NS	NS	NS	NS	19.1	16.4 Q
Calcium	NA	NA	29,000	NS	NS	NS	NS	NS	NS	44,100 D	25,700 D
Chromium	10	NC2LGW	1.29	NS	NS	NS	NS	NS	NS	3 U	0.996 JQ
Cobalt	1	NC GW-IMAC	6.75	NS	NS	NS	NS	NS	NS	**7.72**	**4.68 Q**
Copper	1,000	NC2LGW	3.44	NS	NS	NS	NS	NS	NS	0.665 J	0.831 JQ
Iron	300	NC2LGW	629	NS	NS	NS	NS	NS	NS	**351**	**310**
Lead	15	NC2LGW	0.271	NS	NS	NS	NS	NS	NS	0.6 U	0.174 J
Magnesium	NC	NA	9,450	NS	NS	NS	NS	NS	NS	20,100 D	11,700 D
Manganese	50	NC2LGW	367	NS	NS	NS	NS	NS	NS	**1,080 D**	**422 D**
Nickel	100	NC2LGW	6.48	NS	NS	NS	NS	NS	NS	5.87	3.92
Potassium	NC	NA	1,870	NS	NS	NS	NS	NS	NS	3,210 J	2,130 J
Sodium	NC	NA	23,400	NS	NS	NS	NS	NS	NS	46,800 D	21,200 D
Vanadium	0.3	NC GW-IMAC	1.24	NS	NS	NS	NS	NS	NS	**1.11**	**1.03 Q**
Zinc	1000	NC2LGW	7.65	NS	NS	NS	NS	NS	NS	10.9 J	9.45 J

TABLE 16

Groundwater Samples Detections and Exceedances - 2nd Street Disposal Area

TRDA Remedial Investigation Report

Harvey Point Defense Testing Activity

Hertford, North Carolina

Sample ID	**Criteria**	**Source**	**Background Value[1]**	TR-2ND-GW08-11-15-0116	TR-2ND-GW08-25-29-0116	TR-2ND-GW09-12-16-0116	TR-2ND-GW09D-12-16-0116	TR-2ND-GW11-10-14-0116	TR-2ND-GW11-25-29-0116	TR-2ND-MW01-0613	TR-2ND-MW02-0613
Sample Type				Grab	Grab	Grab	Grab	Grab	Grab	Monitoring Well	Monitoring Well
Sample Date				1/19/16	1/19/16	1/19/16	1/19/16	1/20/16	1/20/16	6/20/13	6/20/13
Chemical Name											
Wet Chemistry (UG/L)											
Alkalinity	NC	NA	NA	NS	NS	NS	NS	NS	NS	150	99000
Methane	NC	NA	NA	NS	NS	NS	NS	NS	NS	17	4000 J
Nitrate	10000	NC2LGW	NA	NS	NS	NS	NS	NS	NS	0.21 U	270 J
Sulfate	250000	NC2LGW	NA	NS	NS	NS	NS	NS	NS	100 D	45000
Total Organic Carbon (TOC)	NC	NA	NA	NS	NS	NS	NS	NS	NS	3	1500

Notes:

[1] Values are from the maximum values for the background samples (Table 14)

Shading indicates detection

Bold text indicates exceedance of the NC2LGW or NC GW-IMAC

Blue text indicates exceedance of maximum background value

B - Analyte also detected in an associated laboratory blank

D - Compound identified in an analysis at a secondary dilution factor

J - Analyte present. Value may or may not be accurate or precise

N - The MS/MSD accuracy and/or precision are outside criteria

NA - Not available

NC - No criteria

NR - Not Reported. 2012 groundwater samples, collected from temporary sample points by others, excluded from this report due to data uncertainty associated with the sample method of collecting metals data from a geoprobe rig. The results were noticeably higher in those DPT points than in the metals samples collected from the monitoring wells.

NS - Not sampled

P - Estimated result. There is greater than a 40% difference between the two GC columns for the detected concentrations.

Q -The relative percent difference (RPD) and/or percent recovery exceeded limits in the associated Blank Spike and/or Blank Spike Duplicate.

U - The material was analyzed for, but not detected

mg/L - Milligrams per liter

UG/L - Micrograms per liter

TABLE 16

Groundwater Samples Detections and Exceedances - 2nd Street Disposal Area

TRDA Remedial Investigation Report

Harvey Point Defense Testing Activity

Hertford, North Carolina

Sample ID	Criteria	Source	Background Value[1]	TR-2ND-MW03-0216	TR-2ND-MW03D-0216	TR-2ND-MW04-0216	TR-2ND-MW05-0216	TR-2ND-MW06-0216	TR-2ND-MW07-0216
Sample Type				Monitoring Well	Monitoring Well	Monitoring Well	Monitoring Well	Monitoring Well	Monitoring Well
Sample Date				2/10/16	2/10/16	2/10/16	2/12/16	2/10/16	2/12/16
Chemical Name									
Volatile Organic Compounds (UG/L)									
1,1,2-Trichloro-1,2,2-trifluoroethane (Freon-113)	200000	NC2LGW	NA	1 U	1 U	1 U	24.2 D	42.9	3.56 DJ
1,1-Dichloroethane	6	NC2LGW	NA	0.5 U	0.5 U	0.5 U	1 U	0.5 U	1 U
1,2,3-Trichlorobenzene	NC	NA	NA	0.5 U	0.5 U	0.5 U	1 U	0.5 U	1 U
1,2,4-Trichlorobenzene	70	NA	NA	0.5 U	0.5 U	0.5 U	1 U	0.5 U	1 U
Acetone	6000	NC2LGW	NA	5 QU	5 QU	5 QU	16.7 DJ	4.54 QJ	14.2 DJ
Dichlorodifluoromethane (Freon-12)	1000	NC2LGW	NA	86.1	87	4.44	22.7 D	114	41.5 D
Isopropylbenzene	70	NC2LGW	NA	0.5 U	0.5 U	0.5 U	1 U	0.5 U	1 U
Methane	NC	NA	NA	NS	NS	NS	NS	NS	NS
Methylene chloride	5	NC2LGW	NA	1 U	1 U	1 U	2 U	1 U	2 U
Methyl-tert-butyl ether (MTBE)	20	NC2LGW	NA	0.5 U	0.5 U	0.5 U	1 U	0.5 U	1 U
Tetrachloroethene	0.7	NC2LGW	NA	**3.13 B**	**3.41 B**	0.4 U	0.324 DJ	**0.832**	0.634 DJ
Toluene	600	NC2LGW	NA	0.493 JB	0.552 JB	0.5 U	1 U	0.5 U	1 U
Trichlorofluoromethane (Freon-11)	2000	NC2LGW	NA	325 D	333 D	2.94	53.7 D	199	65.4 D
Vinyl Chloride	0.03	NC2LGW	NA	0.5 U	0.5 U	0.5 U	1 U	0.5 U	1 U
Semivolatile Organic Compounds (UG/L)									
Bis(2-ethylhexyl)phthalate	3	NC2LGW	NA	0.186 U	0.2 U	0.194 U	0.114 JB	0.186 U	0.348 JB
Explosives (UG/L)									
3-Nitrotoluene	NC	NA	NA	0.152 U	0.152 U	0.154 U	0.155 U	0.151 U	0.14 PJ
HMX	NC	NA	NA	0.152 U	0.152 U	0.154 U	0.155 U	0.151 U	1.26
Nitrobenzene	NC	NA	NA	1.19 P	0.898	0.823 P	0.155 U	0.151 U	0.152 U
RDX	NC	NA	NA	0.152 U	0.152 U	0.154 U	0.155 U	0.151 U	3.23
Total Metals (UG/L)									
Aluminum	NC	NA	601	NS	NS	NS	NS	NS	NS
Antimony	1	NC GW-IMAC	ND	1 U	1 U	1 U	1 U	1 U	1 U
Arsenic	10	NC2LGW	ND	NS	NS	NS	NS	NS	NS
Barium	700	NC2LGW	34	NS	NS	NS	NS	NS	NS
Calcium	NA	NA	29,000	NS	NS	NS	NS	NS	NS
Chromium	10	NC2LGW	1.29	NS	NS	NS	NS	NS	NS
Cobalt	1	NC GW-IMAC	6.75	0.914 J	1.5 U	1.5 U	0.828 J	0.772 J	0.758 J
Copper	1,000	NC2LGW	3.44	NS	NS	NS	NS	NS	NS
Iron	300	NC2LGW	629	NS	NS	NS	NS	NS	NS
Lead	15	NC2LGW	0.271	NS	NS	NS	NS	NS	NS
Magnesium	NC	NA	9,450	**2.39 J**	**2.52 J**	**2.03 J**	**5.08**	2.5 U	**3.94**
Manganese	50	NC2LGW	367	**179**	**174**	**121**	**695 N**	**91.8**	**385 N**
Nickel	100	NC2LGW	6.48	NS	NS	NS	NS	NS	NS
Potassium	NC	NA	1,870	NS	NS	NS	NS	NS	NS
Sodium	NC	NA	23,400	NS	NS	NS	NS	NS	NS
Vanadium	0.3	NC GW-IMAC	1.24	NS	NS	NS	NS	NS	NS
Zinc	1000	NC2LGW	7.65	3.42 J	2.88 J	6.11	3.12 J	5.25	5.99

TABLE 16

Groundwater Samples Detections and Exceedances - 2nd Street Disposal Area

TRDA Remedial Investigation Report

Harvey Point Defense Testing Activity

Hertford, North Carolina

Sample ID	**Criteria**	**Source**	**Background Value[1]**	TR-2ND-MW03-0216	TR-2ND-MW03D-0216	TR-2ND-MW04-0216	TR-2ND-MW05-0216	TR-2ND-MW06-0216	TR-2ND-MW07-0216
Sample Type				Monitoring Well	Monitoring Well	Monitoring Well	Monitoring Well	Monitoring Well	Monitoring Well
Sample Date				2/10/16	2/10/16	2/10/16	2/12/16	2/10/16	2/12/16
Chemical Name									
Wet Chemistry (UG/L)									
Alkalinity	NC	NA	NA	91,800	NS	72,100	290,000	64,200	96,200
Methane	NC	NA	NA	1.45 J	1.1 J	1.55 J	34.5	1.13 J	243
Nitrate	10000	NC2LGW	NA	89.6 J	NS	173 J	100 U	253	100 U
Sulfate	250000	NC2LGW	NA	23,900	NS	55,800	97,400	38,100	74,900
Total Organic Carbon (TOC)	NC	NA	NA	2500 U	NS	2500 U	2,880 J	2500 U	3,350

Notes:

[1] Values are from the maximum values for the background samples (Table 14)

Shading indicates detection

Bold text indicates exceedance of the NC2LGW or NC GW-IMAC

Blue text indicates exceedance of maximum background value

B - Analyte also detected in an associated laboratory blank

D - Compound identified in an analysis at a secondary dilution factor

J - Analyte present. Value may or may not be accurate or precise

N - The MS/MSD accuracy and/or precision are outside criteria

NA - Not available

NC - No criteria

NR - Not Reported. 2012 groundwater samples, collected from temporary sample points by others, excluded from this report due to data uncertainty associated with the sample method of collecting metals data from a geoprobe rig. The results were noticeably higher in those DPT points than in the metals samples collected from the monitoring wells.

NS - Not sampled

P - Estimated result. There is greater than a 40% difference between the two GC columns for the detected concentrations.

Q -The relative percent difference (RPD) and/or percent recovery exceeded limits in the associated Blank Spike and/or Blank Spike Duplicate.

U - The material was analyzed for, but not detected

mg/L - Milligrams per liter

UG/L - Micrograms per liter

TABLE 17

Summary of Chemicals of Concern and Preliminary Cleanup Levels

TRDA Remedial Investigation Report

Harvey Point Defense Testing Activity

Hertford, North Carolina

2nd Street Disposal Area					
Media	**Chemical of Concern**	**Regulatory Criteria**	**Source***	**Background Value****	**Preliminary Cleanup Level**
Surface Soil	**None**	--	--	--	--
Subsurface Soil	**None**	--	--	--	--
Groundwater	**VOCs**				
	Tetrachloroethene	0.7	NC2LGW	NA	0.7
	Vinyl chloride	0.03	NC2LGW	NA	0.03
	Metals				
	Cobalt	1	NC GW-IMAC	6.75	6.75
	Manganese	50	NC2LGW	367	367
5th Street Disposal Area					
Media	**Chemical of Concern**	**Regulatory Criteria**	**Source***	**Background Value****	**Preliminary Cleanup Level**
Surface Soil	**None**	--	--	--	--
Subsurface Soil	**None**	--	--	--	--
Groundwater	**VOCs**				
	1,2,4-Trichlorobenzene	70	NC2LGW	NA	70
	1,2-Dichlorobenzene	20	NC2LGW	NA	20
	1,4-Dichlorobenzene	6	NC2LGW	NA	6
	Benzene	1	NC2LGW	NA	1
	Methyl-tert-Butyl ether (MTBE)	20	NC2LGW	NA	20
	Tetrachloroethene	0.7	NC2LGW	NA	0.7
	Vinyl chloride	0.03	NC2LGW	NA	0.03
	Metals				
	Cobalt	1	NC GW-IMAC	6.75	6.75
	Iron	300	NC2LGW	629	629
	Manganese	50	NC2LGW	367	367
	Vanadium	0.3	NC GW-IMAC	1	1

Notes:

* NC2LGW values are from the North Carolina Groundwater Quality Standards; NC GW-IMAC values are the Interim Maximum Allowable Concentrations (April 2013).

**Values are from the maximum values for the background samples (Table 14)

TABLE 18

Remaining Soil Samples Detections and Exceedances - 5th Street Disposal Area

TRDA Remedial Investigation Report

Harvey Point Defense Testing Activity

Hertford, North Carolina

Sample ID	Background Value[1]	Protection of Groundwater PSRG[2]	Residential Health-Based PSRG[2]	5th-1	TR-5TH-SS05-0613*	TR-5TH-SB06-04-06-0613	TR-5th-SS14-0514	TR-5th-SB15-01-03-0514	TR-5th-SS18-0514	TR-5th-SS19-0514	TR-5th-SS20-0514	TR-5th-SS21-0514	TR-5TH-CSF01-0814
Sample Date				1/10/12	6/10/13	6/18/13	5/5/14	5/7/14	5/5/14	5/5/14	5/5/14	5/5/14	8/1/14
Sample Depth (feet bgs)				8-12	0.0-0.5/0.5-1[3]	4-6	0.0-0.5	3-5	0.0-0.5	0.0-0.5	0.0-0.5	0.0-0.5	floor
Chemical Name													
Volatile Organic Compounds (mg/kg)													
2-Butanone	NA	NA[4]	5,900	0.0243	0.0024 U	0.0025 U	NS	NS	NS	NS	NS	NS	0.0027 U
Acetone	NA	NA[4]	12,000	0.0856	0.012 U	0.013 U	NS	NS	NS	NS	NS	NS	0.014 JBQ
Carbon disulfide	NA	NA[4]	150	0.000812 J	0.0048 U	0.0051 U	NS	0.0066 U	NS	NS	NS	NS	0.0053 U
m- and p-Xylene	NA	NC	NA	ND	0.0019 U	0.002 U	NS	0.0026 U	NS	NS	NS	NS	0.0021 U
Methyl acetate	NA	NC	16,000	ND	0.0048 U	0.0051 U	NS	0.0066 U	NS	NS	NS	NS	0.0053 UQ
Methylene chloride	NA	NA[4]	57	0.00179 J	0.0048 U	0.0051 U	NS	0.0066 U	NS	NS	NS	NS	0.0011 JBQ
Toluene	NA	NA[4]	820	ND	0.001 U	0.001 U	NS	0.0017 J	NS	NS	NS	NS	0.0011 U
Xylene, total	NA	NA[4]	130	ND	0.0019 U	0.002 U	NS	NS	NS	NS	NS	NS	0.0021 U
Semivolatile Organic Compounds (mg/kg)													
Acenaphthene	ND	NA[4]	720	NA	0.087	0.032 U	0.03 U	0.036 U	0.031 U	0.032 U	0.037 U	0.023 J	NS
Acenaphthylene	ND	NA[4]	NC	NA	0.034 J	0.032 U	0.03 U	0.036 U	0.031 U	0.032 U	0.037 U	0.031 U	NS
Anthracene	ND	NA[4]	3,600	NA	0.53	0.032 U	0.03 U	0.036 U	0.031 U	0.032 U	0.037 U	0.067	NS
Benzo(a)anthracene	ND	NA[4]	0.16	NA	**1.8**	0.032 U	0.022 J	0.036 U	0.03 J	0.033 J	0.03 J	0.16	NS
Benzo(a)pyrene	ND	NA[4]	0.016	NA	**1**	0.032 U	0.03 U	0.036 U	0.031 U	0.032 U	0.037 U	**0.091**	0.029 U
Benzo(b)fluoranthene	ND	NA[4]	0.16	NA	**1.4**	0.032 U	0.03 U	0.036 U	0.031 U	0.032 U	0.037 U	0.15	NS
Benzo(g,h,i)perylene	ND	NA[4]	NC	NA	0.33	0.032 U	0.03 U	0.037 J	0.031 U	0.032 U	0.037 U	0.072	NS
Benzo(k)fluoranthene	ND	NA[4]	1.6	NA	0.69	0.032 U	0.03 U	0.036 U	0.031 U	0.032 U	0.037 U	0.06	NS
bis(2-Ethylhexyl)phthalate	NA	7.2	39	NA	0.18 J	0.13 U	NS	0.036 U	NS	NS	NS	NS	NS
Chrysene	ND	NA[4]	16	NA	1.6	0.032 U	0.03 U	0.036 U	0.031 U	0.032 U	0.037 U	0.13	NS
Dibenz(a,h)anthracene	ND	NA[4]	0.016	NA	**0.094**	0.032 U	0.03 U	0.036 U	0.031 U	0.032 U	0.037 U	0.031 U	NS
Fluoranthene	ND	NA[4]	480	NA	3.4	0.032 U	0.03 U	0.036 U	0.031 U	0.023 J	0.037 U	0.31	NS
Fluorene	ND	NA[4]	480	NA	0.14	0.032 U	0.03 U	0.036 U	0.031 U	0.032 U	0.037 U	0.033 J	NS
Indeno(1,2,3-cd)pyrene	ND	NA[4]	0.16	NA	**0.29**	0.032 U	0.03 U	0.036 U	0.031 UQ	0.032 UQ	0.037 UQ	0.06 Q	NS
Phenanthrene	ND	NA[4]	NC	NA	1.9	0.032 U	0.03 U	0.036 U	0.031 U	0.032 U	0.037 U	0.27	NS
Pyrene	ND	NA[4]	360	NA	2.8	0.032 U	0.03 U	0.036 U	0.031 U	0.019 J	0.037 U	0.23	NS
Pesticide/Polychlorinated Biphenyls (mg/kg)													
Aroclor-1254	NA	NC	1	NA	0.31 DPQ	0.025 U	0.022 UQ	0.026 U	0.021 JPQ	0.021 JPQ	0.027 JPQ	0.089 PQ	0.021 U
Aroclor-1260	NA	NC	1	NA	0.62 D	0.025 UQ	0.044	0.026 U	0.25	0.23	0.12	0.71	0.012 J
Total Metals (mg/kg)													
Aluminum	32,000	NC	15,000	11,300	4,550	**20,900**	NS	NS	NS	NS	NS	NS	NS
Antimony	ND	NA[4]	6.2	ND	1.36 U	2.01 U	0.876 U	1.06 U	0.927 U	0.939 U	1.08 U	0.918 U	2.83 U
Arsenic	3.74	NA[4]	0.68	**1.03**	**1.74 J**	**1.65 J**	1.5 U	**1.34 J**	**2.03 J**	**1.97 J**	**2.53 J**	**1.55 J**	1.41 U
Barium	134	NA[4]	3,000	35.3	30.3	60.9	NS	1.07	NS	NS		NS	NS
Beryllium	0.64	NA[4]	32	0.0358 J	0.177	0.391	NS	NS	NS	NS	NS	NS	NS
Cadmium	0.88	NA[4]	14	0.0307 J	0.285	0.101 U	0.0392 J	0.0492 J	0.279	0.191 J	0.291 J	0.277 J	NS
Calcium	3,600	NC	NC	891	1,060	1,140	NS	NS	NS	NS	NS	NS	NS
Chromium	38.5	NA[4]	24,000	15.6	7.53	26.6	NS	2.66	NS	NS	NS	NS	NS
Cobalt	4.64	0.9	4.6	2.47	1.64	3.29	NS	0.773	NS	NS	NS	NS	0.353 U
Copper	441	NA[4]	620	4.8	12.9	7.66	NS	NS	NS	NS	NS	NS	NS
Iron	14,100	150	11,000	6,050	4,190	8,990	721	1,410	5,050	7,500	7,720	3,830	425
Lead	47.9	NA[4]	400	6.51	23.8	7.31	6.27	2.64	23.4	14.3	22.9	24.4	1.62 J
Magnesium	2,600	NC	NC	1,250	864	2,280	NS	NS	NS	NS	NS	NS	NS
Manganese	412	65	360	53.2	125	108	NS	NS	NS	NS	NS	NS	NS
Mercury	0.037	NA[4]	1.9	0.0143	NS	NS	0.0248	0.0123 J	0.182	0.116	0.129	0.911	NS
Nickel	16.8	NA[4]	300	7.51	3.63	11.1	NS	1.64	NS	NS	NS	NS	NS
Potassium	765	NC	NC	487	617	677	NS	NS	NS	NS	NS	NS	NS
Sodium	102	NC	NC	46.5	23.1 J	64.8	NS	NS	NS	NS	NS	NS	NS

TABLE 18

Remaining Soil Samples Detections and Exceedances - 5th Street Disposal Area

TRDA Remedial Investigation Report

Harvey Point Defense Testing Activity

Hertford, North Carolina

Sample ID	**Background Value[1]**	**Protection of Groundwater PSRG[2]**	**Residential Health-Based PSRG[2]**	5th-1	TR-5TH-SS05-0613*	TR-5TH-SB06-04-06-0613	TR-5th-SS14-0514	TR-5th-SB15-01-03-0514	TR-5th-SS18-0514	TR-5th-SS19-0514	TR-5th-SS20-0514	TR-5th-SS21-0514	TR-5TH-CSF01-0814
Sample Date				1/10/12	6/10/13	6/18/13	5/5/14	5/7/14	5/5/14	5/5/14	5/5/14	5/5/14	8/1/14
Sample Depth (feet bgs)				8-12	0.0-0.5/0.5-1[3]	4-6	0.0-0.5	3-5	0.0-0.5	0.0-0.5	0.0-0.5	0.0-0.5	floor
Chemical Name													
Thallium	1.29	NA[4]	0.16	0.0715 J	1.36 U	2.01 U	NS	NS	NS	NS	NS	NS	NS
Vanadium	31.9	6	78	16.1	8.2	22.6	NS	NS	NS	NS	NS	NS	NS
Zinc	87.3	NA[4]	4,600	17.6	32.1	20.8	5.07	4.59	38.1	24.4	77.3	36.6	1.36 J

Notes:

[1] Values are from the maximum values for the background samples (Table 13)

[2] Values are from the Inactive Hazardous Sites Branch Preliminary Soil Remediation Goals (PSRG) Table (NCDEQ, September 2015). For carcinogenic PAHs without PSRG, the PSRG for benzo(a)pyrene was used. For non-carcinogenic PAHs without PSRG, the PSRG for pyrene was used. For PCBs, the unrestricted use residential/industrial PSRG of 1 mg/kg was used.

[3] Sample depth is 0.0 to 0.5 foot bgs for all analytes except VOCs, for which the sample depth is 0.5 to 1 foot bgs

[4] Protection of Groundwater PSRG does not apply because chemical is not a COC in groundwater

Underlined text indicates exceedance of the Protection of Groundwater PSRG criteria

Bold text indicates exceedance of Preliminary Residential Health-Based Soil Remediation

Shading indicates detection.

Blue text indicates exceedance of maximum background value.

bgs - below ground surface

D - Compound identified in an analysis at a secondary dilution factor

J - Analyte present below the reporting limit

mg/kg - Milligrams per kilogram

NA - Not applicable

NS - Not sampled

P - Indicates a greater than 25% difference of detection between the primary and secondary

Q - One or more quality control criteria failed

U - The material was analyzed for, but not

*The highest concentration of the parent sample and duplicate sample.

TABLE 18

Remaining Soil Samples Detections and Exceedances - 5th Street Disposal Area

TRDA Remedial Investigation Report

Harvey Point Defense Testing Activity

Hertford, North Carolina

Sample ID	Background Value[1]	Protection of Groundwater PSRG[2]	Residential Health-Based PSRG[2]	TR-5TH-CSF02-0814	TR-5TH-CSF03-0814	TR-5TH-CSF04-0814	TR-5TH-CSF05-0814	TR-5TH-CSF05D-0814	TR-5TH-CSF06-0814	TR-5TH-CSF07-0814	TR-5TH-CSF08-0814	TR-5TH-CSF09-0814	TR-5TH-CSW01-0814	TR-5TH-CSW03-0814
Sample Date				8/1/14	8/1/14	8/1/14	8/1/14	8/1/14	8/1/14	8/1/14	8/1/14	8/1/14	8/1/14	8/1/14
Sample Depth (feet bgs)				floor	floor	floor	floor	floor	floor	floor	floor	floor	wall	wall
Chemical Name														
Volatile Organic Compounds (mg/kg)														
2-Butanone	NA	NA[4]	5,900	0.0031 U	0.0027 UQ	0.0026 U	0.0032 U	0.003 U	0.0026 U	0.0025 U	0.003 U	0.0031 UQ	0.0026 U	0.0032 U
Acetone	NA	NA[4]	12,000	0.016 UQ	0.023 JBQ	0.0019 JBQ	0.0054 JBQ	0.013 JBQ	0.0032 JQ	0.0028 JQ	0.0071 JQ	0.024 JBQ	0.022 JBQ	0.0097 JBQ
Carbon disulfide	NA	NA[4]	150	0.0063 U	0.0054 UQ	0.0051 U	0.0064 U	0.006 U	0.0053 UQ	0.0051 UQ	0.006 UQ	0.0063 U	0.0052 U	0.0064 U
m- and p-Xylene	NA	NC	NA	0.0025 U	0.0021 UQ	0.002 U	0.0026 U	0.0024 U	0.0021 U	0.002 U	0.0024 U	0.0025 UQ	0.0021 U	0.0026 U
Methyl acetate	NA	NC	16,000	0.0063 UQ	0.0054 UQ	0.0051 UQ	0.0064 UQ	0.006 UQ	0.0053 U	0.0051 U	0.006 U	0.0063 UQ	0.0052 U	0.0064 U
Methylene chloride	NA	NA[4]	57	0.0063 UQ	8.00E-04 J	0.0051 UQ	0.0064 UQ	0.006 UQ	0.0053 UQ	9.00E-04 JBQ	0.006 UQ	0.0014 JBQ	7.00E-04 J	0.0064 U
Toluene	NA	NA[4]	820	0.0013 U	0.0011 UQ	0.001 U	0.0013 U	0.0012 U	0.0011 U	0.001 U	0.0012 U	0.0013 U	8.00E-04 J	0.0013 U
Xylene, total	NA	NA[4]	130	0.0025 U	0.0021 UQ	0.002 U	0.0026 U	0.0024 U	0.0021 U	0.002 U	0.0024 U	0.0025 U	0.0021 U	0.0026 U
Semivolatile Organic Compounds (mg/kg)														
Acenaphthene	ND	NA[4]	720	NS	NS	NS	NS	NS	NS	NS	NS	NS	NS	NS
Acenaphthylene	ND	NA[4]	NC	NS	NS	NS	NS	NS	NS	NS	NS	NS	NS	NS
Anthracene	ND	NA[4]	3,600	NS	NS	NS	NS	NS	NS	NS	NS	NS	NS	NS
Benzo(a)anthracene	ND	NA[4]	0.16	NS	NS	NS	NS	NS	NS	NS	NS	NS	NS	NS
Benzo(a)pyrene	ND	NA[4]	0.016	0.027 U	0.029 U	0.034 U	0.027 U	0.027 U	0.028 U	0.027 U	0.027 U	0.027 U	0.033 U	0.035 U
Benzo(b)fluoranthene	ND	NA[4]	0.16	NS	NS	NS	NS	NS	NS	NS	NS	NS	NS	NS
Benzo(g,h,i)perylene	ND	NA[4]	NC	NS	NS	NS	NS	NS	NS	NS	NS	NS	NS	NS
Benzo(k)fluoranthene	ND	NA[4]	1.6	NS	NS	NS	NS	NS	NS	NS	NS	NS	NS	NS
bis(2-Ethylhexyl)phthalate	NA	7.2	39	NS	NS	NS	NS	NS	NS	NS	NS	NS	NS	NS
Chrysene	ND	NA[4]	16	NS	NS	NS	NS	NS	NS	NS	NS	NS	NS	NS
Dibenz(a,h)anthracene	ND	NA[4]	0.016	NS	NS	NS	NS	NS	NS	NS	NS	NS	NS	NS
Fluoranthene	ND	NA[4]	480	NS	NS	NS	NS	NS	NS	NS	NS	NS	NS	NS
Fluorene	ND	NA[4]	480	NS	NS	NS	NS	NS	NS	NS	NS	NS	NS	NS
Indeno(1,2,3-cd)pyrene	ND	NA[4]	0.16	NS	NS	NS	NS	NS	NS	NS	NS	NS	NS	NS
Phenanthrene	ND	NA[4]	NC	NS	NS	NS	NS	NS	NS	NS	NS	NS	NS	NS
Pyrene	ND	NA[4]	360	NS	NS	NS	NS	NS	NS	NS	NS	NS	NS	NS
Pesticide/Polychlorinated Biphenyls (mg/kg)														
Aroclor-1254	NA	NC	1	0.02 U	0.03 JPQ	0.025 UQ	0.017 JPQ	0.02 U	0.021 U	0.02 U	0.032 JPQ	0.02 U	0.024 U	0.026 U
Aroclor-1260	NA	NC	1	0.014 J	0.13	0.035 J	0.047	0.02 UQ	0.023 J	0.02 UQ	0.1	0.02 UQ	0.024 U	0.026 U
Total Metals (mg/kg)														
Aluminum	32,000	NC	15,000	NS	NS	NS	NS	NS	NS	NS	NS	NS	NS	NS
Antimony	ND	NA[4]	6.2	2.01 U	2.14 U	3.23 U	2.7 U	2.39 U	3.09 U	2.03 U	2.57 U	2.72 U	3.4 U	3.09 U
Arsenic	3.74	NA[4]	0.68	0.571 J	**1.12 J**	**2.69 J**	**0.721 J**	**1.06 J**	**1.48 J**	0.486 J	0.673 J	1.36 U	**4.84**	**4.43**
Barium	134	NA[4]	3,000	NS	NS	NS	NS	NS	NS	NS	NS	NS	NS	NS
Beryllium	0.64	NA[4]	32	NS	NS	NS	NS	NS	NS	NS	NS	NS	NS	NS
Cadmium	0.88	NA[4]	14	NS	NS	NS	NS	NS	NS	NS	NS	NS	NS	NS
Calcium	3,600	NC	NC	NS	NS	NS	NS	NS	NS	NS	NS	NS	NS	NS
Chromium	38.5	NA[4]	24,000	NS	NS	NS	NS	NS	NS	NS	NS	NS	NS	NS
Cobalt	4.64	0.9	4.6	0.0935 J	0.738	2.62	0.289 J	1.04	1.08	0.145 J	0.329 J	0.129 J	3.57	3.28
Copper	441	NA[4]	620	NS	NS	NS	NS	NS	NS	NS	NS	NS	NS	NS
Iron	14,100	150	11,000	517	1,650	5,850	1,760	2,570	2,920	657	1,050	689 Q	8,750	7,590
Lead	47.9	NA[4]	400	2.16	2.16	10.7	22.3	10.8	9.15	2.01 J	7.58	2.07 J	5.52	6.33
Magnesium	2,600	NC	NC	NS	NS	NS	NS	NS	NS	NS	NS	NS	NS	NS
Manganese	412	65	360	NS	NS	NS	NS	NS	NS	NS	NS	NS	NS	NS
Mercury	0.037	NA[4]	1.9	NS	NS	NS	NS	NS	NS	NS	NS	NS	NS	NS
Nickel	16.8	NA[4]	300	NS	NS	NS	NS	NS	NS	NS	NS	NS	NS	NS
Potassium	765	NC	NC	NS	NS	NS	NS	NS	NS	NS	NS	NS	NS	NS
Sodium	102	NC	NC	NS	NS	NS	NS	NS	NS	NS	NS	NS	NS	NS

TABLE 18

Remaining Soil Samples Detections and Exceedances - 5th Street Disposal Area

TRDA Remedial Investigation Report

Harvey Point Defense Testing Activity

Hertford, North Carolina

Sample ID	**Background Value[1]**	**Protection of Groundwater PSRG[2]**	**Residential Health-Based PSRG[2]**	TR-5TH-CSF02-0814	TR-5TH-CSF03-0814	TR-5TH-CSF04-0814	TR-5TH-CSF05-0814	TR-5TH-CSF05D-0814	TR-5TH-CSF06-0814	TR-5TH-CSF07-0814	TR-5TH-CSF08-0814	TR-5TH-CSF09-0814	TR-5TH-CSW01-0814	TR-5TH-CSW03-0814
Sample Date				8/1/14	8/1/14	8/1/14	8/1/14	8/1/14	8/1/14	8/1/14	8/1/14	8/1/14	8/1/14	8/1/14
Sample Depth (feet bgs)				floor	floor	floor	floor	floor	floor	floor	floor	floor	wall	wall
Chemical Name														
Thallium	1.29	NA[4]	0.16	NS	NS	NS	NS	NS	NS	NS	NS	NS	NS	NS
Vanadium	31.9	6	78	NS	NS	NS	NS	NS	NS	NS	NS	NS	NS	NS
Zinc	87.3	NA[4]	4,600	1.45	8.32	20.6	10	15.9	20.2	1.68	6.97	1.68	20.6	21.4

Notes:

[1] Values are from the maximum values for the background samples (Table 13)

[2] Values are from the Inactive Hazardous Sites Branch Preliminary Soil Remediation Goals (PSRG) Table (NCDEQ, September 2015). For carcinogenic PAHs without PSRG, the PSRG for benzo(a)pyrene was used. For non-carcinogenic PAHs without PSRG, the PSRG for pyrene was used. For PCBs, the unrestricted use residential/industrial PSRG of 1 mg/kg was used.

[3] Sample depth is 0.0 to 0.5 foot bgs for all analytes except VOCs, for which the sample depth is 0.5 to 1 foot bgs

[4] Protection of Groundwater PSRG does not apply because chemical is not a COC in groundwater

Underlined text indicates exceedance of the Protection of Groundwater PSRG criteria

Bold text indicates exceedance of Preliminary Residential Health-Based Soil Remediation

Shading indicates detection.

Blue text indicates exceedance of maximum background value.

bgs - below ground surface

D - Compound identified in an analysis at a secondary dilution factor

J - Analyte present below the reporting limit

mg/kg - Milligrams per kilogram

NA - Not applicable

NS - Not sampled

P - Indicates a greater than 25% difference of detection between the primary and secondary

Q - One or more quality control criteria failed

U - The material was analyzed for, but not

*The highest concentration of the parent sample and duplicate sample.

TABLE 18

Remaining Soil Samples Detections and Exceedances - 5th Street Disposal Area

TRDA Remedial Investigation Report

Harvey Point Defense Testing Activity

Hertford, North Carolina

Sample ID	**Background Value[1]**	**Protection of Groundwater PSRG[2]**	**Residential Health-Based PSRG[2]**	TR-5TH-CSW07-0814	TR-5TH-CSW07D-0814	TR-5TH-CSW08-0814	TR-5TH-CSW09-0814	TR-5TH-CSW11-0814	TR-5TH-CSW11D-0814	TR-5TH-CSW12-0814	TR-5TH-CSW13-0814	TR-5TH-CSW14-0814	TR-5TH-CSW15-0814
Sample Date				8/1/14	8/1/14	8/1/14	8/1/14	8/1/14	8/1/14	8/1/14	8/1/14	8/1/14	8/1/14
Sample Depth (feet bgs)				wall	wall	wall	wall	wall	wall	wall	wall	wall	wall
Chemical Name													
Volatile Organic Compounds (mg/kg)													
2-Butanone	NA	NA[4]	5,900	0.0028 U	0.003 U	0.0028 U	0.0029 U	0.0025 U	0.0025 U	0.0026 U	0.0025 U	0.0027 U	0.0032 U
Acetone	NA	NA[4]	12,000	0.014 UQ	0.0038 JBQ	0.0025 JBQ	0.015 UQ	0.013 UQ	0.031 BQ	0.013 UQ	0.013 UQ	0.0067 JBQ	0.0066 JBQ
Carbon disulfide	NA	NA[4]	150	0.0055 U	0.0059 U	0.0057 U	0.0059 U	0.005 U	0.0051 U	0.0052 U	0.005 U	0.0053 U	0.0063 U
m- and p-Xylene	NA	NC	NA	0.0022 U	0.0024 U	0.0023 U	0.0024 U	0.002 U	0.002 U	0.0021 U	1.00E-03 J	0.0021 U	0.0025 U
Methyl acetate	NA	NC	16,000	0.0055 UQ	0.0059 UQ	0.0057 UQ	0.0059 UQ	0.005 UQ	0.021 Q	0.0052 UQ	0.005 UQ	0.0053 UQ	0.0063 UQ
Methylene chloride	NA	NA[4]	57	0.0055 UQ	9.00E-04 JBQ	8.00E-04 JBQ	0.0059 UQ	7.00E-04 JBQ	9.00E-04 JBQ	0.0052 UQ	0.005 UQ	0.0053 UQ	0.0063 UQ
Toluene	NA	NA[4]	820	0.0011 U	0.0012 U	0.0011 U	0.0012 U	0.001 U	0.001 U	0.001 U	0.001 U	0.0011 U	7.00E-04 J
Xylene, total	NA	NA[4]	130	0.0022 U	0.0024 U	0.0023 U	0.0024 U	0.002 U	0.002 U	0.0021 U	1.00E-03 J	0.0021 U	0.0025 U
Semivolatile Organic Compounds (mg/kg)													
Acenaphthene	ND	NA[4]	720	NS	NS	NS	NS	NS	NS	NS	NS	NS	NS
Acenaphthylene	ND	NA[4]	NC	NS	NS	NS	NS	NS	NS	NS	NS	NS	NS
Anthracene	ND	NA[4]	3,600	NS	NS	NS	NS	NS	NS	NS	NS	NS	NS
Benzo(a)anthracene	ND	NA[4]	0.16	NS	NS	NS	NS	NS	NS	NS	NS	NS	NS
Benzo(a)pyrene	ND	NA[4]	0.016	0.03 U	0.027 U	0.027 U	0.027 U	0.018 J	0.027 U	0.028 U	0.027 U	0.034 U	0.034 U
Benzo(b)fluoranthene	ND	NA[4]	0.16	NS	NS	NS	NS	NS	NS	NS	NS	NS	NS
Benzo(g,h,i)perylene	ND	NA[4]	NC	NS	NS	NS	NS	NS	NS	NS	NS	NS	NS
Benzo(k)fluoranthene	ND	NA[4]	1.6	NS	NS	NS	NS	NS	NS	NS	NS	NS	NS
bis(2-Ethylhexyl)phthalate	NA	7.2	39	NS	NS	NS	NS	NS	NS	NS	NS	NS	NS
Chrysene	ND	NA[4]	16	NS	NS	NS	NS	NS	NS	NS	NS	NS	NS
Dibenz(a,h)anthracene	ND	NA[4]	0.016	NS	NS	NS	NS	NS	NS	NS	NS	NS	NS
Fluoranthene	ND	NA[4]	480	NS	NS	NS	NS	NS	NS	NS	NS	NS	NS
Fluorene	ND	NA[4]	480	NS	NS	NS	NS	NS	NS	NS	NS	NS	NS
Indeno(1,2,3-cd)pyrene	ND	NA[4]	0.16	NS	NS	NS	NS	NS	NS	NS	NS	NS	NS
Phenanthrene	ND	NA[4]	NC	NS	NS	NS	NS	NS	NS	NS	NS	NS	NS
Pyrene	ND	NA[4]	360	NS	NS	NS	NS	NS	NS	NS	NS	NS	NS
Pesticide/Polychlorinated Biphenyls (mg/kg)													
Aroclor-1254	NA	NC	1	0.022 U	0.02 U	0.02 U	0.02 UQ	0.02 U	0.02 U	0.021 UQ	0.02 U	0.025 U	0.025 U
Aroclor-1260	NA	NC	1	0.014 J	0.02 U	0.011 J	0.02 J	0.02 U	0.02 U	0.02 J	0.02 U	0.025 U	0.025 U
Total Metals (mg/kg)													
Aluminum	32,000	NC	15,000	NS	NS	NS	NS	NS	NS	NS	NS	NS	NS
Antimony	ND	NA[4]	6.2	2.55 U	2.48 U	2.54 U	2.56 U	2.72 U	2.47 U	0.458 J	2.26 U	2.92 U	2.53 U
Arsenic	3.74	NA[4]	0.68	**1.48 J**	**1.15 J**	1.27 U	1.28 U	1.36 U	0.645 J	0.544 J	1.13 U	**5.10**	**4.31**
Barium	134	NA[4]	3,000	NS	NS	NS	NS	NS	NS	NS	NS	NS	NS
Beryllium	0.64	NA[4]	32	NS	NS	NS	NS	NS	NS	NS	NS	NS	NS
Cadmium	0.88	NA[4]	14	NS	NS	NS	NS	NS	NS	NS	NS	NS	NS
Calcium	3,600	NC	NC	NS	NS	NS	NS	NS	NS	NS	NS	NS	NS
Chromium	38.5	NA[4]	24,000	NS	NS	NS	NS	NS	NS	NS	NS	NS	NS
Cobalt	4.64	0.9	4.6	1.03	0.768	0.318 U	0.161 J	0.17 J	0.0999 J	0.887	0.0841 J	3.67	3.87
Copper	441	NA[4]	620	NS	NS	NS	NS	NS	NS	NS	NS	NS	NS
Iron	14,100	150	11,000	2,870	2,190	505	662	796	536	779	412	7,770	9,250
Lead	47.9	NA[4]	400	9.36	8.47	2.03 J	3.44	3.45	2.12 J	6.82	12.1	4.96	7.26
Magnesium	2,600	NC	NC	NS	NS	NS	NS	NS	NS	NS	NS	NS	NS
Manganese	412	65	360	NS	NS	NS	NS	NS	NS	NS	NS	NS	NS
Mercury	0.037	NA[4]	1.9	NS	NS	NS	NS	NS	NS	NS	NS	NS	NS
Nickel	16.8	NA[4]	300	NS	NS	NS	NS	NS	NS	NS	NS	NS	NS
Potassium	765	NC	NC	NS	NS	NS	NS	NS	NS	NS	NS	NS	NS
Sodium	102	NC	NC	NS	NS	NS	NS	NS	NS	NS	NS	NS	NS

TABLE 18

Remaining Soil Samples Detections and Exceedances - 5th Street Disposal Area

TRDA Remedial Investigation Report

Harvey Point Defense Testing Activity

Hertford, North Carolina

Sample ID	**Background Value[1]**	**Protection of Groundwater PSRG[2]**	**Residential Health-Based PSRG[2]**	TR-5TH-CSW07-0814	TR-5TH-CSW07D-0814	TR-5TH-CSW08-0814	TR-5TH-CSW09-0814	TR-5TH-CSW11-0814	TR-5TH-CSW11D-0814	TR-5TH-CSW12-0814	TR-5TH-CSW13-0814	TR-5TH-CSW14-0814	TR-5TH-CSW15-0814
Sample Date				8/1/14	8/1/14	8/1/14	8/1/14	8/1/14	8/1/14	8/1/14	8/1/14	8/1/14	8/1/14
Sample Depth (feet bgs)				wall	wall	wall	wall	wall	wall	wall	wall	wall	wall
Chemical Name													
Thallium	1.29	NA[4]	0.16	NS	NS	NS	NS	NS	NS	NS	NS	NS	NS
Vanadium	31.9	6	78	NS	NS	NS	NS	NS	NS	NS	NS	NS	NS
Zinc	87.3	NA[4]	4,600	15.5	10.2	1.22 J	2.95	2.3	1.42	8.44	1.96	22.4	24.1

Notes:

[1] Values are from the maximum values for the background samples (Table 13)

[2] Values are from the Inactive Hazardous Sites Branch Preliminary Soil Remediation Goals (PSRG) Table (NCDEQ, September 2015). For carcinogenic PAHs without PSRG, the PSRG for benzo(a)pyrene was used. For non-carcinogenic PAHs without PSRG, the PSRG for pyrene was used. For PCBs, the unrestricted use residential/industrial PSRG of 1 mg/kg was used.

[3] Sample depth is 0.0 to 0.5 foot bgs for all analytes except VOCs, for which the sample depth is 0.5 to 1 foot bgs

[4] Protection of Groundwater PSRG does not apply because chemical is not a COC in groundwater

Underlined text indicates exceedance of the Protection of Groundwater PSRG criteria

Bold text indicates exceedance of Preliminary Residential Health-Based Soil Remediation

Shading indicates detection.

Blue text indicates exceedance of maximum background value.

bgs - below ground surface

D - Compound identified in an analysis at a secondary dilution factor

J - Analyte present below the reporting limit

mg/kg - Milligrams per kilogram

NA - Not applicable

NS - Not sampled

P - Indicates a greater than 25% difference of detection between the primary and secondary

Q - One or more quality control criteria failed

U - The material was analyzed for, but not

*The highest concentration of the parent sample and duplicate sample.

TABLE 19

Groundwater Samples Detections and Exceedances - 5th Street Disposal Area

TRDA Remedial Investigation Report

Harvey Point Defense Testing Activity

Hertford, North Carolina

Sample ID	Criteria	Source	Background Value[1]	5th-1	5th-2	5th-3	5th-4	TR-5TH-SB03-GW-0613	TR-5TH-SB04-GW-0613	TR-5TH-SB05-GW-0613*	TR-5TH-SB06-GW-0613	TR-5TH-GW01-10-14-0116	TR-5TH-GW01-25-29-0116
Sample Type				Grab	Grab	Grab	Grab	Grab	Grab	Grab	Grab	Grab	Grab
Sample Date				1/10/12	1/10/12	1/10/12	1/10/12	6/17/13	6/17/13	6/18/13	6/18/13	1/12/16	1/12/16
Chemical Name													
Volatile Organic Compounds (UG/L)													
1,2,3-Trichlorobenzene	NC	NA	NA	ND	ND	ND	ND	1 U	1 U	1 U	1 U	1 U	0.5 DJB
1,2,4-Trichlorobenzene	70	NC2LGW	NA	ND	0.160 J	ND	ND	1 U	1 U	1 U	1 U	1 U	1.24 DJ
1,2-Dichlorobenzene	20	NC2LGW	NA	ND	0.700 J	ND	ND	1 U	3.6	1 U	1 U	1 U	0.665 DJ
1,2-Dicholroethane	0.4	NC2LGW	NA	NA	NA	NA	NA	1 U	1 U	1 U	1 U	0.4 U	0.4 U
1,3-Dichlorobenzene	200	NC2LGW	NA	ND	ND	ND	ND	1 U	1 U	1 U	1 U	1 U	1 U
1,4-Dichlorobenzene	6	NC2LGW	NA	ND	ND	ND	ND	1 U	1 U	1 U	1 U	1 U	0.898 DJ
Acetone	6000	NC2LGW	NA	1.33 J	1.34	1.22 J	1.15 J	12 U	12 U	12 U	12 U	7.67 DJ	7.42 DJ
Benzene	1	NC2LGW	NA	ND	0.25	ND	ND	1 U	1 U	1 U	1 U	0.4 U	0.4 U
Chlorobenzene	50	NC2LGW	NA	ND	0.52	ND	ND	1 U	1.3 J	1 U	1 U	1 U	1 U
cis-1,2-Dichloroethene	70	NC2LGW	NA	1 U	NR	NR	NR	1 U	1 U	1 U	1 U	1 U	1 U
Dichlorodifluoromethane (Freon-12)	1000	NC2LGW	NA	ND	45.6	ND	ND	1 U	0.78 J	1 U	1 U	2 U	2 U
Isopropylbenzene	70	NC2LGW	NA	ND	ND	ND	ND	1 U	1 U	1 U	1 U	1 U	1 U
Methane	NC	NA	NA	NA	NA	NA	NA	NS	NS	NS	NS	NS	NS
Methylene chloride	5	NC2LGW	NA	0.240 J	0.79	0.610 J	0.620 J	5 U	5 U	5 U	5 U	2 U	2 U
Methyl-tert-Butyl Ether (MTBE)	20	NC2LGW	NA	ND	9.96	0.590 J	2.01	1 U	10	1 U	1 U	0.709 DJ	2.78 D
Tetrachloroethene	0.7	NC2LGW	NA	1 U	NR	NR	NR	1 U	1 U	1 U	1 U	1 U	1 U
Toluene	600	NC2LGW	NA	1 U	NR	NR	NR	1 U	1 U	1 U	1 U	1 U	1 U
Vinyl chloride	0.03	NC2LGW	NA	ND	**13.6**	ND	ND	1 U	1 U	1 U	1 U	1 U	1 U
Semivolatile Organic Compounds (UG/L)													
1,4-Dioxane	3	NC2LGW	NA	NS	NS	NS	NS	NS	NS	NS	NS	NS	NS
Anthracene	2000	NC2LGW	ND	NA	NA	NA	NA	0.08 U	0.2	0.08 U	0.08 U	NS	NS
Bis(2-ethylhexyl)phthalate	3	NC2LGW	NA	NA	NA	NA	NA	6 U	**4.9 J**	**11**	**10**	NS	NS
Fluorene	300	NC2LGW	ND	NA	NA	NA	NA	0.076 J	0.08 U	0.08 U	0.08 U	NS	NS
Naphthalene	6	NC2LGW	ND	NA	NA	NA	NA	0.08 U	0.08 U	0.08 U	0.08 U	NS	NS
Total Metals (UG/L)													
Aluminum	NC	NA	601	NR	NR	NR	NR	NS	NS	NS	NS		
Arsenic	10	NC2LGW	ND	NR	NR	NR	NR	NS	NS	NS	NS	NS	NS
Barium	700	NC2LGW	34	NR	NR	NR	NR	NS	NS	NS	NS	NS	NS
Beryllium	4	NC GW-IMAC	0.0976	NR	NR	NR	NR	NS	NS	NS	NS	NS	NS
Cadmium	2	NC2LGW	ND	NR	NR	NR	NR	NS	NS	NS	NS	NS	NS
Calcium	NC	NA	29000	NR	NR	NR	NR	NS	NS	NS	NS	NS	NS
Chromium	10	NC2LGW	1.29	NR	NR	NR	NR	NS	NS	NS	NS	NS	NS
Cobalt	1	NC GW-IMAC	6.75	NR	NR	NR	NR	NS	NS	NS	NS	NS	NS
Copper	1000	NC2LGW	3.44	NR	NR	NR	NR	NS	NS	NS	NS	NS	NS
Iron	300	NC2LGW	629	NR	NR	NR	NR	NS	NS	NS	NS	NS	NS
Lead	15	NC2LGW	0.271	NR	NR	NR	NR	NS	NS	NS	NS	NS	NS
Magnesium	NC	NA	9450	NR	NR	NR	NR	NS	NS	NS	NS	NS	NS
Manganese	50	NC2LGW	367	NR	NR	NR	NR	NS	NS	NS	NS	NS	NS
Nickel	100	NC2LGW	6.48	NR	NR	NR	NR	NS	NS	NS	NS	NS	NS
Potassium	NC	NA	1,870	NR	NR	NR	NR	NS	NS	NS	NS	NS	NS
Sodium	0.3	NC GW-IMAC	23,400	NR	NR	NR	NR	NS	NS	NS	NS	NS	NS
Vanadium	0.3	NC GW-IMAC	1.24	NR	NR	NR	NR	NS	NS	NS	NS	NS	NS
Zinc	1000	NC2LGW	7.65	NR	NR	NR	NR	NS	NS	NS	NS	NS	NS

TABLE 19

Groundwater Samples Detections and Exceedances - 5th Street Disposal Area

TRDA Remedial Investigation Report

Harvey Point Defense Testing Activity

Hertford, North Carolina

Sample ID	**Criteria**	**Source**	**Background Value[1]**	5th-1	5th-2	5th-3	5th-4	TR-5TH-SB03-GW-0613	TR-5TH-SB04-GW-0613	TR-5TH-SB05-GW-0613*	TR-5TH-SB06-GW-0613	TR-5TH-GW01-10-14-0116	TR-5TH-GW01-25-29-0116
Sample Type				Grab	Grab	Grab	Grab	Grab	Grab	Grab	Grab	Grab	Grab
Sample Date				1/10/12	1/10/12	1/10/12	1/10/12	6/17/13	6/17/13	6/18/13	6/18/13	1/12/16	1/12/16
Chemical Name													
Wet Chemistry (UG/L)													
Alkalinity	NC	NA	NA	NA	NA	NA	NA	NS	NS	NS	NS	NS	NS
Chloride	250000	NC2LGW	NA	NA	NA	NA	NA	NS	NS	NS	NS	NS	NS
Methane	NC	NA	NA	NA	NA	NA	NA	NS	NS	NS	NS	NS	NS
Nitrate	10000	NC2LGW	NA	NA	NA	NA	NA	NS	NS	NS	NS	NS	NS
Nitrite	1000	NC2LGW	NA	NA	NA	NA	NA	NS	NS	NS	NS	NS	NS
Sulfate	250000	NA	NA	NA	NA	NA	NA	NS	NS	NS	NS	NS	NS
Total Organic Carbon (TOC)	NC	NA	NA	NA	NA	NA	NA	NS	NS	NS	NS	NS	NS

Notes:

[1] Values are from the maximum values for the background samples (Table 14)

Shading indicates detection

Bold text indicates exceedance of the NC2LGW or NC GW-IMAC

Blue text indicates exceedance of background criteria

B - Analyte also detected in an associated laboratory blank

D - Compound identified in an analysis at a secondary dilution factor

J - Analyte present. Value may or may not be accurate or precise

mg/L - Milligrams per liter

N - The MS/MSD accuracy and/or precision are outside criteria

NA - Not available

NC - No criteria

ND - The material was analyzed for, but not detected. Sampled by others and reported as ND

NR - Not Reported. 2012 groundwater samples, collected from temporary sample points by others, excluded from this report due to data uncertainty associated with sample method of collecting metals data from a geoprobe rig. The results were noticeably higher in those DPT points than in the metals samples collected from the monitoring wells.

NS - Not sampled

P - Estimated result. There is greater than a 40% difference between the two GC columns for the detected concentrations.

Q -The relative percent difference (RPD) and/or percent recovery exceeded limits in the associated Blank Spike and/or Blank Spike Duplicate.

U - The material was analyzed for, but not detected

UG/L - Micrograms per liter

X - The parameter shows a potential positive bias on a reported concentration due to an ICV or CCV exceedance.

*The highest concentration of the parent sample and duplicate sample/Indicates value from just before sample collection (Field Parameters)

TABLE 19

Groundwater Samples Detections and Exceedances - 5th Street Disposal Area

TRDA Remedial Investigation Report

Harvey Point Defense Testing Activity

Hertford, North Carolina

Sample ID	**Criteria**	**Source**	**Background Value[1]**	TR-5TH-GW02-06-10-0116	TR-5TH-GW02-25-29-0116	TR-5TH-GW03-10-14-0116	TR-5TH-GW03D-10-14-0116	TR-5TH-GW04-06-10-0116	TR-5TH-GW05-06-10-0116	TR-5TH-GW06-10-14-0116	TR-5TH-GW07-10-14-0116
Sample Type				Grab	Grab	Grab	Grab	Grab	Grab	Grab	Grab
Sample Date				1/12/16	1/12/16	1/12/16	1/12/16	1/12/16	1/12/16	1/12/16	1/12/16
Chemical Name											
Volatile Organic Compounds (UG/L)											
1,2,3-Trichlorobenzene	NC	NA	NA	1 U	1 U	1 U	1 U	1 U	10.8 DB	1 U	1 U
1,2,4-Trichlorobenzene	70	NC2LGW	NA	1 U	1 U	1 U	1 U	1 U	15.9 D	1 U	1 U
1,2-Dichlorobenzene	20	NC2LGW	NA	1 U	1 U	1 U	1 U	1 U	19.1 D	1 U	1.03 DJ
1,2-Dicholroethane	0.4	NC2LGW	NA	0.4 U	0.4 U	0.4 U	0.4 U	0.4 U	0.4 U	0.4 U	0.4 U
1,3-Dichlorobenzene	200	NC2LGW	NA	1 U	1 U	1 U	1 U	1 U	1 U	1 U	1 U
1,4-Dichlorobenzene	6	NC2LGW	NA	1 U	1 U	1 U	1 U	1 U	3.46 D	1 U	1 U
Acetone	6000	NC2LGW	NA	9.02 DJ	7.4 DJ	10 U	6.32 DJ	10 U	16.9 DJ	10.7 DJ	10 U
Benzene	1	NC2LGW	NA	0.4 U	0.4 U	0.4 U	0.4 U	0.4 U	0.4 U	0.4 U	0.4 U
Chlorobenzene	50	NC2LGW	NA	1 U	1 U	1 U	1 U	1 U	0.909 DJ	1 U	0.515 DJ
cis-1,2-Dichloroethene	70	NC2LGW	NA	1 U	1 U	1 U	1 U	1 U	1 U	1 U	1 U
Dichlorodifluoromethane (Freon-12)	1000	NC2LGW	NA	2 U	2 U	2 U	2 U	2 U	2 U	2 U	16.2 D
Isopropylbenzene	70	NC2LGW	NA	1 U	1 U	1 U	1 U	1 U	1 U	1 U	1 U
Methane	NC	NA	NA	NS	NS	NS	NS	NS	NS	NS	NS
Methylene chloride	5	NC2LGW	NA	2 U	2 U	2 U	2 U	2 U	2 U	2 U	2 U
Methyl-tert-Butyl Ether (MTBE)	20	NC2LGW	NA	1 U	1 U	1 U	1 U	1 U	5.75 D	1 U	1.67 DJ
Tetrachloroethene	0.7	NC2LGW	NA	1 U	1 U	1 U	1 U	1 U	1 U	1 U	1 U
Toluene	600	NC2LGW	NA	1 U	1 U	0.777 DJ	0.567 DJ	1 U	0.696 DJ	1 U	1 U
Vinyl chloride	0.03	NC2LGW	NA	1 U	1 U	1 U	1 U	1 U	1 U	1 U	**1.41 DJ**
Semivolatile Organic Compounds (UG/L)											
1,4-Dioxane	3	NC2LGW	NA	NS	NS	NS	NS	NS	NS	NS	NS
Anthracene	2000	NC2LGW	ND	NS	NS	NS	NS	NS	NS	NS	NS
Bis(2-ethylhexyl)phthalate	3	NC2LGW	NA	NS	NS	NS	NS	NS	NS	NS	NS
Fluorene	300	NC2LGW	ND	NS	NS	NS	NS	NS	NS	NS	NS
Naphthalene	6	NC2LGW	ND	NS	NS	NS	NS	NS	NS	NS	NS
Total Metals (UG/L)											
Aluminum	NC	NA	601								
Arsenic	10	NC2LGW	ND	NS	NS	NS	NS	NS	NS	NS	NS
Barium	700	NC2LGW	34	NS	NS	NS	NS	NS	NS	NS	NS
Beryllium	4	NC GW-IMAC	0.0976	NS	NS	NS	NS	NS	NS	NS	NS
Cadmium	2	NC2LGW	ND	NS	NS	NS	NS	NS	NS	NS	NS
Calcium	NC	NA	29000	NS	NS	NS	NS	NS	NS	NS	NS
Chromium	10	NC2LGW	1.29	NS	NS	NS	NS	NS	NS	NS	NS
Cobalt	1	NC GW-IMAC	6.75	NS	NS	NS	NS	NS	NS	NS	NS
Copper	1000	NC2LGW	3.44	NS	NS	NS	NS	NS	NS	NS	NS
Iron	300	NC2LGW	629	NS	NS	NS	NS	NS	NS	NS	NS
Lead	15	NC2LGW	0.271	NS	NS	NS	NS	NS	NS	NS	NS
Magnesium	NC	NA	9450	NS	NS	NS	NS	NS	NS	NS	NS
Manganese	50	NC2LGW	367	NS	NS	NS	NS	NS	NS	NS	NS
Nickel	100	NC2LGW	6.48	NS	NS	NS	NS	NS	NS	NS	NS
Potassium	NC	NA	1,870	NS	NS	NS	NS	NS	NS	NS	NS
Sodium	0.3	NC GW-IMAC	23,400	NS	NS	NS	NS	NS	NS	NS	NS
Vanadium	0.3	NC GW-IMAC	1.24	NS	NS	NS	NS	NS	NS	NS	NS
Zinc	1000	NC2LGW	7.65	NS	NS	NS	NS	NS	NS	NS	NS

TABLE 19

Groundwater Samples Detections and Exceedances - 5th Street Disposal Area

TRDA Remedial Investigation Report

Harvey Point Defense Testing Activity

Hertford, North Carolina

Sample ID	**Criteria**	**Source**	**Background Value[1]**	TR-5TH-GW02-06-10-0116	TR-5TH-GW02-25-29-0116	TR-5TH-GW03-10-14-0116	TR-5TH-GW03D-10-14-0116	TR-5TH-GW04-06-10-0116	TR-5TH-GW05-06-10-0116	TR-5TH-GW06-10-14-0116	TR-5TH-GW07-10-14-0116
Sample Type				Grab	Grab	Grab	Grab	Grab	Grab	Grab	Grab
Sample Date				1/12/16	1/12/16	1/12/16	1/12/16	1/12/16	1/12/16	1/12/16	1/12/16
Chemical Name											
Wet Chemistry (UG/L)											
Alkalinity	NC	NA	NA	NS	NS	NS	NS	NS	NS	NS	NS
Chloride	250000	NC2LGW	NA	NS	NS	NS	NS	NS	NS	NS	NS
Methane	NC	NA	NA	NS	NS	NS	NS	NS	NS	NS	NS
Nitrate	10000	NC2LGW	NA	NS	NS	NS	NS	NS	NS	NS	NS
Nitrite	1000	NC2LGW	NA	NS	NS	NS	NS	NS	NS	NS	NS
Sulfate	250000	NA	NA	NS	NS	NS	NS	NS	NS	NS	NS
Total Organic Carbon (TOC)	NC	NA	NA	NS	NS	NS	NS	NS	NS	NS	NS

Notes:

[1] Values are from the maximum values for the background samples (Table 14)

Shading indicates detection

Bold text indicates exceedance of the NC2LGW or NC GW-IMAC

Blue text indicates exceedance of background criteria

B - Analyte also detected in an associated laboratory blank

D - Compound identified in an analysis at a secondary dilution factor

J - Analyte present. Value may or may not be accurate or precise

mg/L - Milligrams per liter

N - The MS/MSD accuracy and/or precision are outside criteria

NA - Not available

NC - No criteria

ND - The material was analyzed for, but not detected. Sampled by others and reported as ND

NR - Not Reported. 2012 groundwater samples, collected from temporary sample points by others, excluded from this report due to data uncertainty associated with sample method of collecting metals data from a geoprobe rig. The results were noticeably higher in those DPT points than in the metals samples collected from the monitoring wells.

NS - Not sampled

P - Estimated result. There is greater than a 40% difference between the two GC columns for the detected concentrations.

Q -The relative percent difference (RPD) and/or percent recovery exceeded limits in the associated Blank Spike and/or Blank Spike Duplicate.

U - The material was analyzed for, but not detected

UG/L - Micrograms per liter

X - The parameter shows a potential positive bias on a reported concentration due to an ICV or CCV exceedance.

*The highest concentration of the parent sample and duplicate sample/Indicates value from just before sample collection (Field Parameters)

TABLE 19

Groundwater Samples Detections and Exceedances - 5th Street Disposal Area

TRDA Remedial Investigation Report

Harvey Point Defense Testing Activity

Hertford, North Carolina

Sample ID	**Criteria**	**Source**	**Background Value[1]**	TR-5TH-GW08-10-14-0116	TR-5TH-GW08-25-29-0116	TR-5TH-GW08D-25-29-0116	TR-5TH-GW09-04-08-0116	TR-5TH-GW10-10-14-0116	TR-5TH-GW11-10-14-0116	TR-5TH-GW11-25-29-0116	TR-5TH-GW12-25-29-0216
Sample Type				Grab	Grab	Grab	Grab	Grab	Grab	Grab	Grab
Sample Date				1/13/16	1/13/16	1/13/16	1/13/16	1/13/16	1/14/16	1/13/16	2/4/16
Chemical Name											
Volatile Organic Compounds (UG/L)											
1,2,3-Trichlorobenzene	NC	NA	NA	1 U	0.5 U	0.5 U	1 U	1 U	1 U	0.5 U	5.78 D
1,2,4-Trichlorobenzene	70	NC2LGW	NA	1 U	0.5 U	0.5 U	1 U	1 U	1 U	0.5 U	11.6 D
1,2-Dichlorobenzene	20	NC2LGW	NA	1 U	0.5 U	0.5 U	1 U	1 U	1 U	0.5 U	**34.2 D**
1,2-Dicholroethane	0.4	NC2LGW	NA	0.4 U	0.2 U	0.2 U	0.4 U	0.4 U	0.4 U	0.2 U	0.302 DJ
1,3-Dichlorobenzene	200	NC2LGW	NA	1 U	0.5 U	0.5 U	1 U	1 U	1 U	0.5 U	1.64 DJ
1,4-Dichlorobenzene	6	NC2LGW	NA	1 U	0.5 U	0.5 U	1 U	1 U	1 U	0.5 U	**11.3 D**
Acetone	6000	NC2LGW	NA	5.74 DJ	5 U	5 U	10 U	10 U	10 QU	5 U	14.1 DJ
Benzene	1	NC2LGW	NA	0.4 U	0.2 U	0.2 U	0.4 U	0.4 U	0.4 U	0.2 U	0.357 DJ
Chlorobenzene	50	NC2LGW	NA	1 U	0.5 U	0.5 U	1 U	1 U	1 U	0.5 U	8.61 D
cis-1,2-Dichloroethene	70	NC2LGW	NA	1 U	0.5 U	0.5 U	1 U	1 U	1 U	0.5 U	1 U
Dichlorodifluoromethane (Freon-12)	1000	NC2LGW	NA	2 U	1 U	1 U	2 U	2 U	2 U	1 U	2 U
Isopropylbenzene	70	NC2LGW	NA	1 U	0.5 U	0.5 U	1 U	1 U	1 U	0.5 U	1 U
Methane	NC	NA	NA	NS	NS	NS	NS	NS	NS	NS	NS
Methylene chloride	5	NC2LGW	NA	2 U	1 U	1 U	2 U	2 U	2 U	1 U	2 U
Methyl-tert-Butyl Ether (MTBE)	20	NC2LGW	NA	1 U	6.46	6.06	1 U	1 U	1 U	0.5 U	19.4 D
Tetrachloroethene	0.7	NC2LGW	NA	1 U	0.5 U	0.5 U	1 U	1 U	1 U	0.5 U	1 U
Toluene	600	NC2LGW	NA	1 U	0.5 U	0.5 U	0.749 DJ	1 U	1.59 DJ	0.5 U	1 U
Vinyl chloride	0.03	NC2LGW	NA	1 U	0.5 U	0.5 U	1 U	1 U	1 U	0.5 U	1 U
Semivolatile Organic Compounds (UG/L)											
1,4-Dioxane	3	NC2LGW	NA	NS	NS	NS	NS	NS	NS	NS	NS
Anthracene	2000	NC2LGW	ND	NS	NS	NS	NS	NS	NS	NS	NS
Bis(2-ethylhexyl)phthalate	3	NC2LGW	NA	NS	NS	NS	NS	NS	NS	NS	NS
Fluorene	300	NC2LGW	ND	NS	NS	NS	NS	NS	NS	NS	NS
Naphthalene	6	NC2LGW	ND	NS	NS	NS	NS	NS	NS	NS	NS
Total Metals (UG/L)											
Aluminum	NC	NA	601								
Arsenic	10	NC2LGW	ND	NS	NS	NS	NS	NS	NS	NS	NS
Barium	700	NC2LGW	34	NS	NS	NS	NS	NS	NS	NS	NS
Beryllium	4	NC GW-IMAC	0.0976	NS	NS	NS	NS	NS	NS	NS	NS
Cadmium	2	NC2LGW	ND	NS	NS	NS	NS	NS	NS	NS	NS
Calcium	NC	NA	29000	NS	NS	NS	NS	NS	NS	NS	NS
Chromium	10	NC2LGW	1.29	NS	NS	NS	NS	NS	NS	NS	NS
Cobalt	1	NC GW-IMAC	6.75	NS	NS	NS	NS	NS	NS	NS	NS
Copper	1000	NC2LGW	3.44	NS	NS	NS	NS	NS	NS	NS	NS
Iron	300	NC2LGW	629	NS	NS	NS	NS	NS	NS	NS	NS
Lead	15	NC2LGW	0.271	NS	NS	NS	NS	NS	NS	NS	NS
Magnesium	NC	NA	9450	NS	NS	NS	NS	NS	NS	NS	NS
Manganese	50	NC2LGW	367	NS	NS	NS	NS	NS	NS	NS	NS
Nickel	100	NC2LGW	6.48	NS	NS	NS	NS	NS	NS	NS	NS
Potassium	NC	NA	1,870	NS	NS	NS	NS	NS	NS	NS	NS
Sodium	0.3	NC GW-IMAC	23,400	NS	NS	NS	NS	NS	NS	NS	NS
Vanadium	0.3	NC GW-IMAC	1.24	NS	NS	NS	NS	NS	NS	NS	NS
Zinc	1000	NC2LGW	7.65	NS	NS	NS	NS	NS	NS	NS	NS

TABLE 19

Groundwater Samples Detections and Exceedances - 5th Street Disposal Area

TRDA Remedial Investigation Report

Harvey Point Defense Testing Activity

Hertford, North Carolina

Sample ID	**Criteria**	**Source**	**Background Value[1]**	TR-5TH-GW08-10-14-0116	TR-5TH-GW08-25-29-0116	TR-5TH-GW08D-25-29-0116	TR-5TH-GW09-04-08-0116	TR-5TH-GW10-10-14-0116	TR-5TH-GW11-10-14-0116	TR-5TH-GW11-25-29-0116	TR-5TH-GW12-25-29-0216
Sample Type				Grab	Grab	Grab	Grab	Grab	Grab	Grab	Grab
Sample Date				1/13/16	1/13/16	1/13/16	1/13/16	1/13/16	1/14/16	1/13/16	2/4/16
Chemical Name											
Wet Chemistry (UG/L)											
Alkalinity	NC	NA	NA	NS	NS	NS	NS	NS	NS	NS	NS
Chloride	250000	NC2LGW	NA	NS	NS	NS	NS	NS	NS	NS	NS
Methane	NC	NA	NA	NS	NS	NS	NS	NS	NS	NS	NS
Nitrate	10000	NC2LGW	NA	NS	NS	NS	NS	NS	NS	NS	NS
Nitrite	1000	NC2LGW	NA	NS	NS	NS	NS	NS	NS	NS	NS
Sulfate	250000	NA	NA	NS	NS	NS	NS	NS	NS	NS	NS
Total Organic Carbon (TOC)	NC	NA	NA	NS	NS	NS	NS	NS	NS	NS	NS

Notes:

[1] Values are from the maximum values for the background samples (Table 14)

Shading indicates detection

Bold text indicates exceedance of the NC2LGW or NC GW-IMAC

Blue text indicates exceedance of background criteria

B - Analyte also detected in an associated laboratory blank

D - Compound identified in an analysis at a secondary dilution factor

J - Analyte present. Value may or may not be accurate or precise

mg/L - Milligrams per liter

N - The MS/MSD accuracy and/or precision are outside criteria

NA - Not available

NC - No criteria

ND - The material was analyzed for, but not detected. Sampled by others and reported as ND

NR - Not Reported. 2012 groundwater samples, collected from temporary sample points by others, excluded from this report due to data uncertainty associated with sample method of collecting metals data from a geoprobe rig. The results were noticeably higher in those DPT points than in the metals samples collected from the monitoring wells.

NS - Not sampled

P - Estimated result. There is greater than a 40% difference between the two GC columns for the detected concentrations.

Q -The relative percent difference (RPD) and/or percent recovery exceeded limits in the associated Blank Spike and/or Blank Spike Duplicate.

U - The material was analyzed for, but not detected

UG/L - Micrograms per liter

X - The parameter shows a potential positive bias on a reported concentration due to an ICV or CCV exceedance.

*The highest concentration of the parent sample and duplicate sample/Indicates value from just before sample collection (Field Parameters)

TABLE 19

Groundwater Samples Detections and Exceedances - 5th Street Disposal Area

TRDA Remedial Investigation Report

Harvey Point Defense Testing Activity

Hertford, North Carolina

Sample ID	Criteria	Source	Background Value[1]	TR-5TH-GW13-05-09-0116	TR-5TH-GW13-25-29-0116	TR-5TH-GW14-25-29-0216	TR-5TH-GW17-25-29-0216	TR-5TH-MW01-0613	TR-5TH-MW02-0613	TR-5TH-MW02-0216	TR-5TH-MW02D-0216	TR-5TH-MW03-0216
Sample Type				Grab	Grab	Grab	Grab	Monitoring Well	Monitoring Well	Monitoring Well	Monitoring Well	Monitoring Well
Sample Date				1/14/16	1/14/16	2/4/16	2/3/16	6/20/13	6/20/13	2/11/16	2/11/16	2/9/16
Chemical Name												
Volatile Organic Compounds (UG/L)												
1,2,3-Trichlorobenzene	NC	NA	NA	1 XU	200 XDB	1 U	3.11 D	1 U	330 D	4.33 D	4 D	1 U
1,2,4-Trichlorobenzene	70	NC2LGW	NA	0.713 XDJ	**669 XD**	1 U	8.75 D	1 U	**1,300 D**	12.6 D	11.8 D	0.625 DJ
1,2-Dichlorobenzene	20	NC2LGW	NA	3.49 XD	**204 XD**	1 U	8.24 D	1 U	**210 D**	9.35 D	8.58 D	1 U
1,2-Dicholroethane	0.4	NC2LGW	NA	0.4 XU	1 XU	0.4 U	0.4 U	1 U	1 U	0.4 U	0.4 U	0.4 U
1,3-Dichlorobenzene	200	NC2LGW	NA	1 U	39.8 D	1 U	1.6 DJ	1 U	52	0.713 DJ	0.634 DJ	1 U
1,4-Dichlorobenzene	6	NC2LGW	NA	1 U	**168 D**	1 U	**6.28 D**	1 U	**260 D**	4.06 D	3.74 D	1 U
Acetone	6000	NC2LGW	NA	284 XD	25 XU	11.6 DJ	21.3 D	12 U	12 U	14.5 DJ	15.7 DJ	6.09 QDJ
Benzene	1	NC2LGW	NA	0.4 U	**2.28 DJ**	0.4 U	0.498 DJ	1 U	**1.8 J**	1 U	1 U	1 U
Chlorobenzene	50	NC2LGW	NA	1.26 DJ	24.7 D	1 U	1.51 DJ	1 U	30	1.77 DJ	1.63 DJ	1 U
cis-1,2-Dichloroethene	70	NC2LGW	NA	1 XU	2.5 XU	1 U	1 U	1 U	1 U	1 U	1 U	1 U
Dichlorodifluoromethane (Freon-12)	1000	NC2LGW	NA	2 XU	5 XU	2 U	2 U	1 U	1 U	2 U	2 U	2 U
Isopropylbenzene	70	NC2LGW	NA	1 XU	2.5 XU	1 U	1 U	1 U	0.96 J	1 U	1 U	1 U
Methane	NC	NA	NA	NS	NS	NS	NS	38.6	48.8	NS	NS	NS
Methylene chloride	5	NC2LGW	NA	2 U	5 U	2 U	2 U	5 U	5 U	2 U	2 U	2 U
Methyl-tert-Butyl Ether (MTBE)	20	NC2LGW	NA	2.8 XD	**552 XD**	8.3 D	**32.1 D**	3.1	**270 D**	3.77 D	3.23 D	1.11 DJ
Tetrachloroethene	0.7	NC2LGW	NA	1 XU	2.5 XU	1 U	1 U	1 U	1 U	1 U	1 U	**1.92 DB**
Toluene	600	NC2LGW	NA	10.1 D	2.5 U	1 U	1 U	1 U	1 U	1 U	1 U	0.971 DJB
Vinyl chloride	0.03	NC2LGW	NA	1 U	2.5 U	1 U	1 U	1 U	1 U	**1.3 DJ**	**1.25 DJ**	1 U
Semivolatile Organic Compounds (UG/L)												
1,4-Dioxane	3	NC2LGW	NA	NS	NS	NS	NS	NS	NS	0.245 U	0.24 U	NS
Anthracene	2000	NC2LGW	ND	NS	NS	NS	NS	0.08 U	0.08 U	0.098 U	0.0962 U	0.093 U
Bis(2-ethylhexyl)phthalate	3	NC2LGW	NA	NS	NS	NS	NS	6 U	6 U	0.166 J	0.142 J	0.114 JB
Fluorene	300	NC2LGW	ND	NS	NS	NS	NS	0.08 U	0.08 U	0.098 U	0.0962 U	0.093 U
Naphthalene	6	NC2LGW	ND	NS	NS	NS	NS	0.08 U	0.084 J	0.098 U	0.0962 U	0.093 U
Total Metals (UG/L)												
Aluminum	NC	NA	601					170	2,000 D			
Arsenic	10	NC2LGW	ND	NS	NS	NS	NS	3.11 J	1.47 J	1.5 U	1.5 U	1.56 J
Barium	700	NC2LGW	34	NS	NS	NS	NS	51.3	54.9	26.3	26	29.3
Beryllium	4	NC GW-IMAC	0.0976	NS	NS	NS	NS	0.37 U	0.128 J	NS	NS	NS
Cadmium	2	NC2LGW	ND	NS	NS	NS	NS	4 U	0.169 J	NS	NS	NS
Calcium	NC	NA	29000	NS	NS	NS	NS	45,600 D	39,600 D	NS	NS	NS
Chromium	10	NC2LGW	1.29	NS	NS	NS	NS	3 U	3.13 J	0.938 J	0.873 J	1.16 J
Cobalt	1	NC GW-IMAC	6.75	NS	NS	NS	NS	**9.18**	**7.71**	**9.98**	**10**	**8.21**
Copper	1000	NC2LGW	3.44	NS	NS	NS	NS	0.621 J	4.72	NS	NS	NS
Iron	300	NC2LGW	629	NS	NS	NS	NS	**1,300 D**	**1,550 D**	270 Q	243 Q	**615 Q**
Lead	15	NC2LGW	0.271	NS	NS	NS	NS	0.6 U	0.874 J	0.75 U	0.75 U	0.521 J
Magnesium	NC	NA	9450	NS	NS	NS	NS	19,500 D	15,000 D	NS	NS	NS
Manganese	50	NC2LGW	367	NS	NS	NS	NS	**561 D**	**383 D**	**473**	**480**	**489**
Nickel	100	NC2LGW	6.48	NS	NS	NS	NS	4.34	6.59	2.64	2.67	2.28 J
Potassium	NC	NA	1,870	NS	NS	NS	NS	3,770	3,570	NS	NS	NS
Sodium	0.3	NC GW-IMAC	23,400	NS	NS	NS	NS	21,100 D	35,000 D	NS	NS	NS
Vanadium	0.3	NC GW-IMAC	1.24	NS	NS	NS	NS	**1.08**	**5.28**	**1.83 J**	**1.71 J**	**2.35 J**
Zinc	1000	NC2LGW	7.65	NS	NS	NS	NS	25.3	11.7 J	1.57 J	1.4 J	6.28 Q

TABLE 19

Groundwater Samples Detections and Exceedances - 5th Street Disposal Area

TRDA Remedial Investigation Report

Harvey Point Defense Testing Activity

Hertford, North Carolina

Sample ID	**Criteria**	**Source**	**Background Value[1]**	TR-5TH-GW13-05-09-0116	TR-5TH-GW13-25-29-0116	TR-5TH-GW14-25-29-0216	TR-5TH-GW17-25-29-0216	TR-5TH-MW01-0613	TR-5TH-MW02-0613	TR-5TH-MW02-0216	TR-5TH-MW02D-0216	TR-5TH-MW03-0216
Sample Type				Grab	Grab	Grab	Grab	Monitoring Well	Monitoring Well	Monitoring Well	Monitoring Well	Monitoring Well
Sample Date				1/14/16	1/14/16	2/4/16	2/3/16	6/20/13	6/20/13	2/11/16	2/11/16	2/9/16
Chemical Name												
Wet Chemistry (UG/L)												
Alkalinity	NC	NA	NA	NS	NS	NS	NS	120,000	62000	107,000	NS	72,100
Chloride	250000	NC2LGW	NA	NS	NS	NS	NS	6200	23000	NS	NS	NS
Methane	NC	NA	NA	NS	NS	NS	NS	NS	NS	253	56.2	6.28
Nitrate	10000	NC2LGW	NA	NS	NS	NS	NS	210 U	210 U	100 U	NS	339
Nitrite	1000	NC2LGW	NA	NS	NS	NS	NS	70 U	70 U	100 U	NS	89.9 J
Sulfate	250000	NA	NA	NS	NS	NS	NS	95000	120,000 D	38,000	NS	39,400
Total Organic Carbon (TOC)	NC	NA	NA	NS	NS	NS	NS	2800	4400	3,090	NS	2,970 J

Notes:

[1] Values are from the maximum values for the background samples (Table 14)

Shading indicates detection

Bold text indicates exceedance of the NC2LGW or NC GW-IMAC

Blue text indicates exceedance of background criteria

B - Analyte also detected in an associated laboratory blank

D - Compound identified in an analysis at a secondary dilution factor

J - Analyte present. Value may or may not be accurate or precise

mg/L - Milligrams per liter

N - The MS/MSD accuracy and/or precision are outside criteria

NA - Not available

NC - No criteria

ND - The material was analyzed for, but not detected. Sampled by others and reported as ND

NR - Not Reported. 2012 groundwater samples, collected from temporary sample points by others, excluded from this report due to data uncertainty associated with sample method of collecting metals data from a geoprobe rig. The results were noticeably higher in those DPT points than in the metals samples collected from the monitoring wells.

NS - Not sampled

P - Estimated result. There is greater than a 40% difference between the two GC columns for the detected concentrations.

Q -The relative percent difference (RPD) and/or percent recovery exceeded limits in the associated Blank Spike and/or Blank Spike Duplicate.

U - The material was analyzed for, but not detected

UG/L - Micrograms per liter

X - The parameter shows a potential positive bias on a reported concentration due to an ICV or CCV exceedance.

*The highest concentration of the parent sample and duplicate sample/Indicates value from just before sample collection (Field Parameters)

TABLE 19

Groundwater Samples Detections and Exceedances - 5th Street Disposal Area

TRDA Remedial Investigation Report

Harvey Point Defense Testing Activity

Hertford, North Carolina

Sample ID	**Criteria**	**Source**	**Background Value[1]**	TR-5TH-MW04-0216	TR-5TH-MW05-0216	TR-5TH-MW06-0216	TR-5TH-MW07-0216
Sample Type				Monitoring Well	Monitoring Well	Monitoring Well	Monitoring Well
Sample Date				2/16/16	2/11/16	2/11/16	2/11/16
Chemical Name							
Volatile Organic Compounds (UG/L)							
1,2,3-Trichlorobenzene	NC	NA	NA	0.974 DJ	195 D	2.08 D	1 U
1,2,4-Trichlorobenzene	70	NC2LGW	NA	2.7 D	**588 DB**	6.33 D	1 U
1,2-Dichlorobenzene	20	NC2LGW	NA	1.28 DJ	**182 D**	5.16 D	1 U
1,2-Dicholroethane	0.4	NC2LGW	NA	0.4 U	0.288 DJ	0.4 U	0.4 U
1,3-Dichlorobenzene	200	NC2LGW	NA	1 U	39.8 D	1 U	1 U
1,4-Dichlorobenzene	6	NC2LGW	NA	2.17 D	**173 D**	1.37 DJ	1 U
Acetone	6000	NC2LGW	NA	15.2 DJ	23.4 D	11.5 DJ	14.1 DJ
Benzene	1	NC2LGW	NA	1 U	**2.09 D**	1 U	0.4 U
Chlorobenzene	50	NC2LGW	NA	1 U	29.3 D	0.765 DJ	1 U
cis-1,2-Dichloroethene	70	NC2LGW	NA	1.08 DJ	1 U	1 U	1 U
Dichlorodifluoromethane (Freon-12)	1000	NC2LGW	NA	2 U	2 U	2 U	2 U
Isopropylbenzene	70	NC2LGW	NA	1 U	0.65 DJ	1 U	1 U
Methane	NC	NA	NA	NS	NS	NS	NS
Methylene chloride	5	NC2LGW	NA	2 U	2 U	2 U	2 U
Methyl-tert-Butyl Ether (MTBE)	20	NC2LGW	NA	1.41 DJ	**345 D**	**86.1 D**	1 U
Tetrachloroethene	0.7	NC2LGW	NA	1 U	1 U	1 U	1 U
Toluene	600	NC2LGW	NA	0.66 DJ	1 U	1 U	1 U
Vinyl chloride	0.03	NC2LGW	NA	1 U	1 U	1 U	1 U
Semivolatile Organic Compounds (UG/L)							
1,4-Dioxane	3	NC2LGW	NA	NS	0.26 J	NS	NS
Anthracene	2000	NC2LGW	ND	0.0962 U	0.0663 J	0.098 U	0.0952 U
Bis(2-ethylhexyl)phthalate	3	NC2LGW	NA	0.126 JB	0.384 J	0.146 J	0.101 J
Fluorene	300	NC2LGW	ND	0.0962 U	0.066 J	0.098 U	0.0952 U
Naphthalene	6	NC2LGW	ND	0.0962 U	0.0575 J	0.098 U	0.0952 U
Total Metals (UG/L)							
Aluminum	NC	NA	601				
Arsenic	10	NC2LGW	ND	1.58 J	1.5 U	1.5 U	1.5 U
Barium	700	NC2LGW	34	50.8	51.1	39.5	51
Beryllium	4	NC GW-IMAC	0.0976	NS	NS	NS	NS
Cadmium	2	NC2LGW	ND	NS	NS	NS	NS
Calcium	NC	NA	29000	NS	NS	NS	NS
Chromium	10	NC2LGW	1.29	0.597 J	1 U	1.78 J	0.9 J
Cobalt	1	NC GW-IMAC	6.75	**20.9**	**6.56**	**9.04**	**11.9**
Copper	1000	NC2LGW	3.44	NS	NS	NS	NS
Iron	300	NC2LGW	629	**486**	114 Q	**681 Q**	142 Q
Lead	15	NC2LGW	0.271	0.75 U	0.75 U	0.52 J	0.75 U
Magnesium	NC	NA	9450	NS	NS	NS	NS
Manganese	50	NC2LGW	367	**902**	**210**	**472**	**1,330**
Nickel	100	NC2LGW	6.48	4.69	3.88	3.59	3.39
Potassium	NC	NA	1,870	NS	NS	NS	NS
Sodium	0.3	NC GW-IMAC	23,400	NS	NS	NS	NS
Vanadium	0.3	NC GW-IMAC	1.24	**1.32 J**	2.5 U	**2.95 J**	2.5 U
Zinc	1000	NC2LGW	7.65	5.34	7	8.33	2.72 J

TABLE 19

Groundwater Samples Detections and Exceedances - 5th Street Disposal Area

TRDA Remedial Investigation Report

Harvey Point Defense Testing Activity

Hertford, North Carolina

Sample ID	**Criteria**	**Source**	**Background Value[1]**	TR-5TH-MW04-0216	TR-5TH-MW05-0216	TR-5TH-MW06-0216	TR-5TH-MW07-0216
Sample Type				Monitoring Well	Monitoring Well	Monitoring Well	Monitoring Well
Sample Date				2/16/16	2/11/16	2/11/16	2/11/16
Chemical Name							
Wet Chemistry (UG/L)							
Alkalinity	NC	NA	NA	139,000	69,100	71,200	162,000
Chloride	250000	NC2LGW	NA	NS	NS	NS	NS
Methane	NC	NA	NA	12.3	21.1	1.07 J	17.7
Nitrate	10000	NC2LGW	NA	100 U	100 U	56.6 J	100 U
Nitrite	1000	NC2LGW	NA	100 U	100 U	100 U	100 U
Sulfate	250000	NA	NA	54,100	117,000	66,300	158,000
Total Organic Carbon (TOC)	NC	NA	NA	2,820 J	2,680 J	2,400 J	3,130

Notes:

[1] Values are from the maximum values for the background samples (Table 14)

Shading indicates detection

Bold text indicates exceedance of the NC2LGW or NC GW-IMAC

Blue text indicates exceedance of background criteria

B - Analyte also detected in an associated laboratory blank

D - Compound identified in an analysis at a secondary dilution factor

J - Analyte present. Value may or may not be accurate or precise

mg/L - Milligrams per liter

N - The MS/MSD accuracy and/or precision are outside criteria

NA - Not available

NC - No criteria

ND - The material was analyzed for, but not detected. Sampled by others and reported as ND

NR - Not Reported. 2012 groundwater samples, collected from temporary sample points by others, excluded from this report due to data uncertainty associated with sample method of collecting metals data from a geoprobe rig. The results were noticeably higher in those DPT points than in the metals samples collected from the monitoring wells.

NS - Not sampled

P - Estimated result. There is greater than a 40% difference between the two GC columns for the detected concentrations.

Q -The relative percent difference (RPD) and/or percent recovery exceeded limits in the associated Blank Spike and/or Blank Spike Duplicate.

U - The material was analyzed for, but not detected

UG/L - Micrograms per liter

X - The parameter shows a potential positive bias on a reported concentration due to an ICV or CCV exceedance.

*The highest concentration of the parent sample and duplicate sample/Indicates value from just before sample collection (Field Parameters)

TABLE 20

VOC COC Properties

TRDA Remedial Investigation Report

Harvey Point Testing Activity

Hertford, North Carolina

Chemical	Molecular Weight (g/mole)	Density (g/cm^3)	Water Solubility (mg/L)	Vapor Pressure (mm Hg)	K_h atm-m^3/mole	K_{oc} (mL/g)	K_d (mL/g)	Log K_{ow} (--)	Log BCF (--)
Volatile Organic Compounds									
1,2,4-Trichlorobenzene	181.5	1.5	49.0	0.5	1.4E-03	10715.0	53.6	4.0	2.7
1,4-Dichlorobenzene	147.0	1.2	79.0	1.7	2.7E-03	390.0	2.0	3.4	2.9
1,2-Dichlorobenzene	147.0	1.3	156.0	1.4	1.5E-02	320.0	1.6	3.4	2.7
Benzene	78.1	0.9	1790.0	94.8	5.6E-03	85.0	0.4	2.1	1.3
Methyl-tert-Butyl ether (MTBE)	88.1	0.7	51000.0	250.0	5.87E-04	12.0	0.1	0.9	0.2
Tetrachloroethene	165.8	1.6	206.0	18.5	1.77E-02	237.0	1.2	3.4	2.1
Vinyl chloride	62.6	0.9	8800.0	2980.0	2.78E-02	57.0	0.3	1.6	1.0

Data source: Hazardous Substances Data Bank [Internet]. Bethesda (MD): National Library of Medicine (US); [Last Revision Date 2015; cited 2011]. Available from: http://toxnet.nlm.nih.gov/cgi-bin/sis/htmlgen?HSDB

Notes:

atm-m^3/mole - atmosphere cubic meters per mole

foc - fraction organic carbon = 0.005 (Assumption based on similar sites)

g/mole - Grams per mole

g/m^3 - Grams per cubic meter

K_d - soil-water partition coefficient = $K_{oc} \times f_{oc}$ for organics

K_h - Henry's Law Constant

K_{oc} - Organic carbon partition coefficient

K_{ow} - Octanol-water partition coefficient

mg/L - Milligrams per liter

mL/g - Milliliters per gram

mm Hg - Millimeter of mercury

n_e - Effective porosity = 0.2 (assumed, typical of silty sand)

p_b - Soil bulk density = 1.7 grams per cubic centimeter (assumption)

TABLE 21

Natural Attenuation Evaluation Parameters Summary

TRDA Remedial Investigation Report

Harvey Point Defense Testing Activity

Hertford, North Carolina

Sample ID	Date Sampled	Dissolved Oxygen (mg/L)	Oxidation Reduction Potential (mV)	Nitrate (ug/L)	Nitrite (ug/L)	Ferrous Iron (mg/L)	Sulfate (ug/L)	Sulfide (ug/L)	Methane (ug/L)	Total Organic Carbon (mg/L)	Temperature (deg_C)
2nd Street Disposal Area											
TR-2ND-MW03	2/10/2016	1.04	95.5	89.6 J	ND	0.00	23900	ND	1.45* J	ND	17.41
TR-2ND-MW04	2/10/2016	1.15	101.6	173 J	ND	0.00	55800	ND	1.55 J	ND	17.34
TR-2ND-MW05	2/12/2016	8.19	80.4	ND	ND	0.00	97400	ND	34.5	2.88 J	15.70
TR-2ND-MW06	2/10/2016	0.98	129.1	253	ND	0.00	38100	ND	1.13 J	ND	16.19
TR-2ND-MW07	2/12/2016	5.93	153.6	ND	ND	0.00	74900	ND	243	3.35	15.83
Minimum		0.98	80.4	89.6	--	0.00	23,900	--	1.13	2.88	15.70
Maximum		8.19	153.6	253.0	--	0.00	97,400	--	243	3.35	17.41
5th Street Disposal Area											
TR-5TH-MW02**	2/11/2016	1.58	103.3	ND	ND	0.00	38000	ND	253*	3.09	16.94
TR-5TH-MW03	2/9/2016	NM	70.1	339	89.9 J	0.00	39400	ND	6.28	2.97 J	18.00
TR-5TH-MW04	2/16/2016	4.23	79.5	ND	ND	0.00	54100	ND	12.3	2.92 J	16.56
TR-5TH-MW05	2/11/2016	3.09	133.8	ND	ND	0.00	117000	ND	21.1	2.68 J	16.17
TR-5TH-MW06	2/11/2016	1.89	129.5	56.6 J	ND	0.00	66300	ND	1.07 J	2.4 J	17.11
TR-5TH-MW07	2/11/2016	4.73	84.9	ND	ND	0.00	158000	ND	17.7	3.13	17.45
Minimum		1.58	70.1	56.6	--	0.00	38,000	--	1.07	2.40	16.17
Maximum		4.73	134	339	--	0.00	158,000	--	253.0	3.13	18.00

Notes:

deg_C - Degrees centigrade

J - Analyte present. Value may or may not be accurate or precise

mg/L - Milligrams per liter

mV - Millivolts

ND - Not detected

NM - Not measured

ug/L - Micrograms per liter

* The highest concentration of the parent sample and duplicate sample

** Well was installed during Phase I RI.

Figures

V:\NACFACENGCOMLANT\439611SecuredAccess\GIS\MapFiles\439611_TRDA_RI\Figure 1 - HPDTA Location.mxd3/30/2016bmailhes

Legend

- HPDTA Boundary
- Initial Site Boundary

N
W E
S

0 6,000 12,000 Feet

Imagery Source: ©2016 Esri

Figure 1
HPDTA Location
TRDA Remedial Investigation Report
Harvey Point Defense Testing Activity
Hertford, North Carolina

ch2m

ID	Task Name	Start	Finish
1	**Remedial Investigation**	**Mon 4/29/13**	**Fri 4/8/16**
2	**Phase I Remedial Investigation**	**Mon 4/29/13**	**Mon 3/24/14**
3	WP to NCDENR	Mon 4/29/13	Mon 4/29/13
4	Field Work (Geophysical Survey, Test Pits)	Mon 5/20/13	Fri 5/31/13
5	WP Addendum to NCDENR	Fri 5/31/13	Fri 5/31/13
6	Field Work (Sampling, Surveying, IDW)	Mon 6/10/13	Fri 8/2/13
7	Report to NCDENR	Mon 3/24/14	Mon 3/24/14
8	**Phase II Remedial Investigation**	**Mon 4/21/14**	**Fri 4/8/16**
9	Work Plan to NCDENR	Mon 4/21/14	Mon 4/21/14
10	Field Work (Pre-RA)	Mon 5/5/14	Fri 5/9/14
11	Work Plan Addendum to NCDENR	Mon 12/7/15	Mon 12/7/15
12	Field Work (Post-RA)	Tue 1/5/16	Thu 2/18/16
13	Report to NCDENR	Fri 4/8/16	Fri 4/8/16
14	**Remedial Action**	**Mon 4/21/14**	**Wed 3/16/16**
15	RAP to NCDENR	Mon 4/21/14	Mon 4/21/14
16	RA Field Work (Pre MPPEH)	Tue 5/6/14	Fri 8/8/14
17	RAP Addendum to NCDENR	Fri 10/2/15	Fri 10/2/15
18	RA Field Work (Post MPPEH)	Tue 10/13/15	Fri 11/20/15
19	RA Completion Report to NCDEQ	Wed 3/16/16	Wed 3/16/16

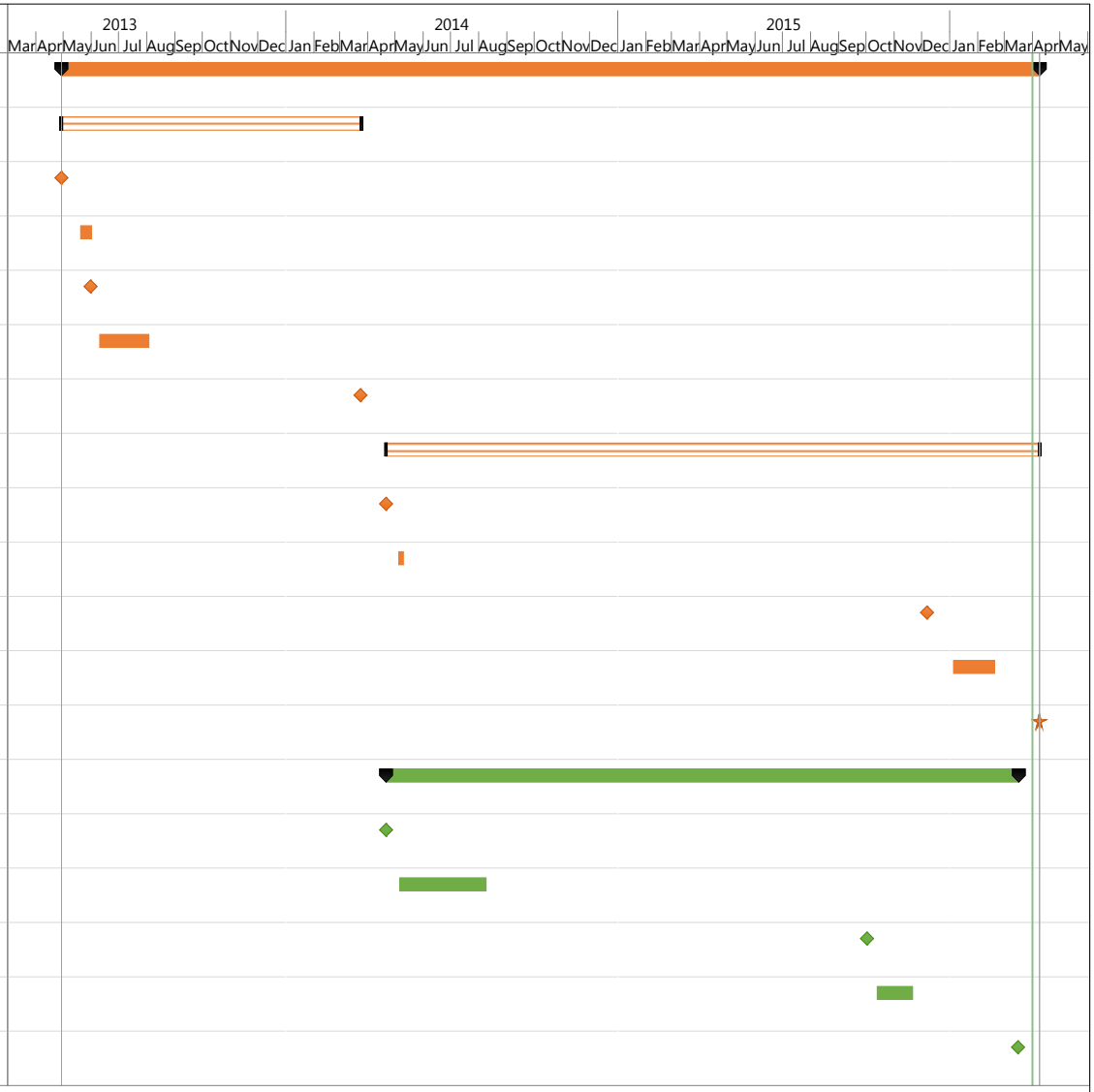

Figure 2: TRDA REC Program RI/RA Timeline
TRDA Remedial Investigation Report
Harvey Point Defense Testing Activity, Hertford, North Carolina

V:\NACFACENGCOMLANT\439611SecuredAccess\GIS\MapFiles\439611_TRDA_RI\Figure 3 - WSW Locations.mxd3/30/2016bmailhes

Legend

- Water Supply Well
- Initial Site Boundary
- Installation Boundary

N
W E
S

0 200 400
Feet

Figure 3
Water Supply Well Locations
TRDA Remedial Investigation Report
Harvey Point Defense Testing Activity
Hertford, North Carolina

ch2m

V:\NACFACENGCOMLANT\439611SecuredAccess\GIS\MapFiles\439611_TRDA_RI\Figure 4 - Site Location.mxd3/30/2016bmailhes

Legend

Initial Site Boundary

Installation Boundary

N
W E
S

0 100 200
Feet

Figure 4
Site Location
TRDA Remedial Investigation Report
Harvey Point Defense Testing Activity
Hertford, North Carolina

ch2m

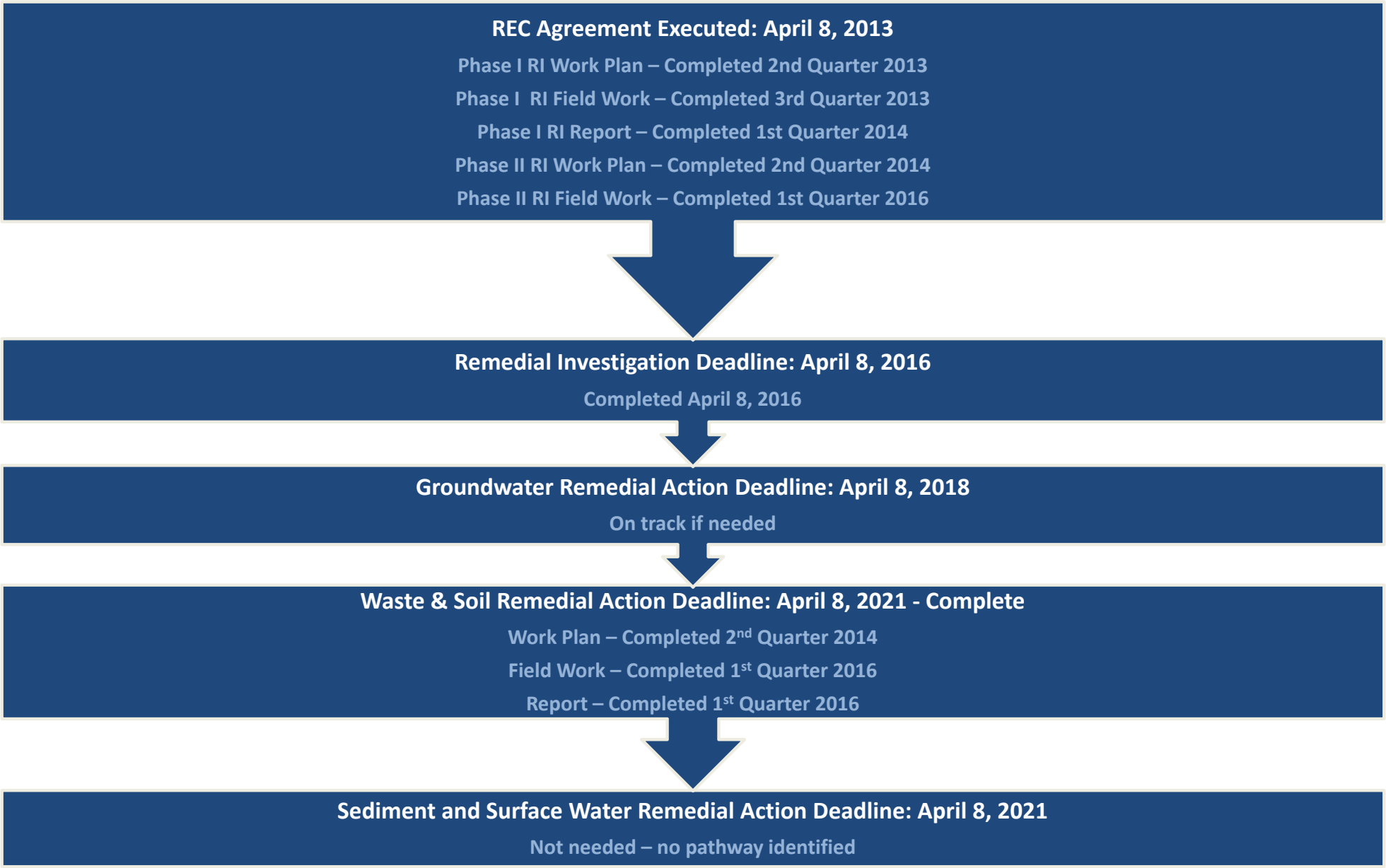

Notes:
Quarters reflect calendar year quarters (e.g., first quarter is January through March)
Quarterly reports must be submitted on or before the 15th day of January, April, July, and October of each year.

Figure 5
TRDA REC Program Milestones Timeline
TRDA Remedial Investigation Report
Harvey Point Defense Testing Activity
Hertford, North Carolina

V:\NACFACENGCOMLANT\439611SecuredAccess\GIS\MapFiles\439611_TRDA_RI\Figure 6 - 2nd Street Sample Locations.mxd4/4/2016bmailhes

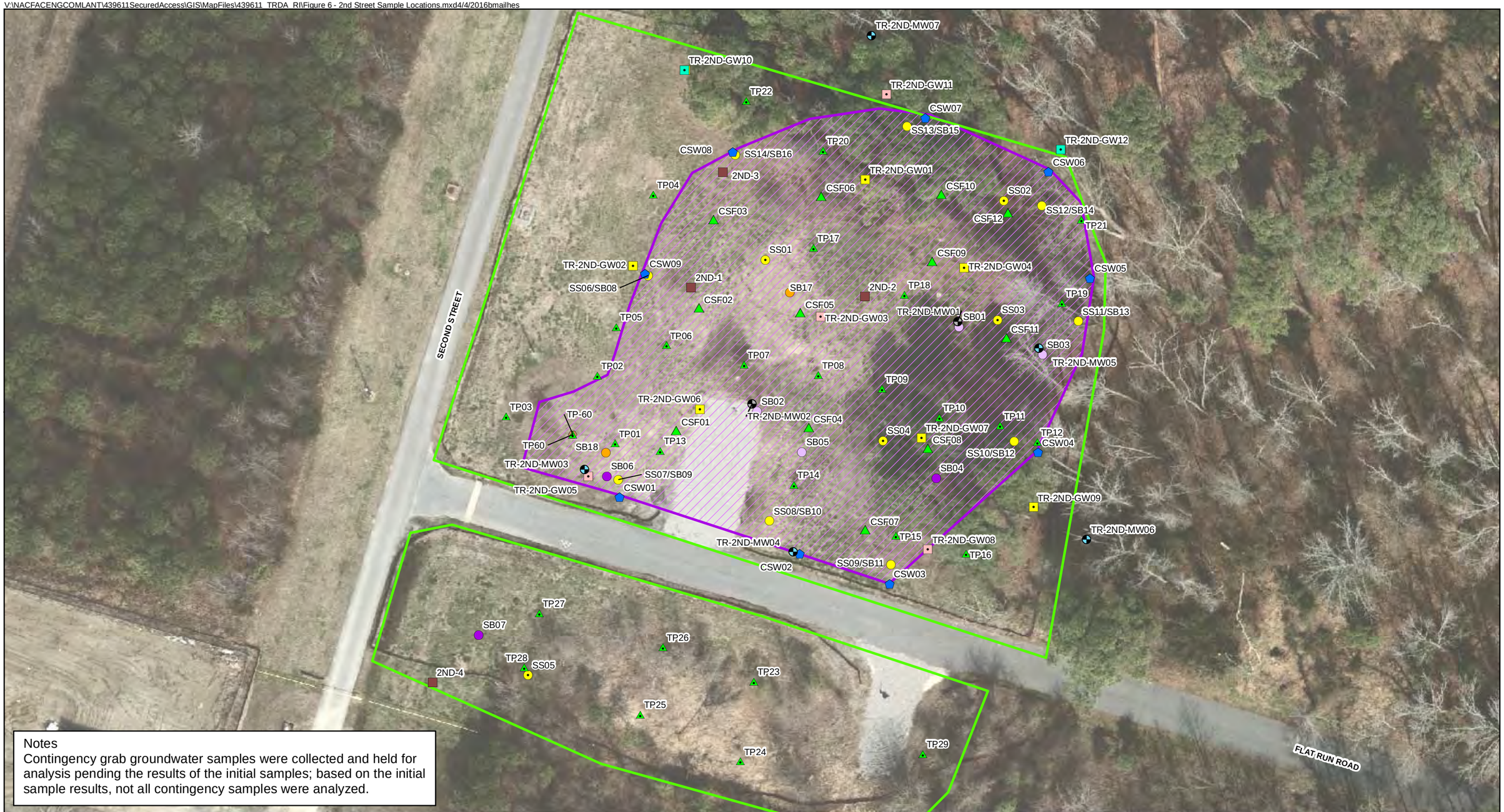

Notes
Contingency grab groundwater samples were collected and held for analysis pending the results of the initial samples; based on the initial sample results, not all contingency samples were analyzed.

Legend

Phase I Sample Locations
- Composite Surface Soil Sample Location
- Geophysical Location
- 2012 Grab Sample Location
- Subsurface Soil Sample Location
- Subsurface Soil/Grab Groundwater Sample Location
- Abandoned Monitoring Well Location
- Test Pit

RA Locations
- Floor Sample Location
- Wall Sample Location

Phase II Sample Locations
- Contingency Grab Groundwater Sample
- Shallow/Deep Grab Groundwater Sample
- Shallow Grab Groundwater Sample
- Surface/Subsurface Soil Sample Location
- Subsurface Soil Sample Location
- Monitoring Well Location

- RA Excavation Extent
- 2013 Geophysical Survey Extent

N W E S

0 20 40 Feet

Figure 6
2nd Street Disposal Area Sample Locations
TRDA Remedial Investigation Report
Harvey Point Defense Testing Activity
Hertford, North Carolina

ch2m

V:\NACFACENGCOMLANT\439611SecuredAccess\GIS\MapFiles\439611_TRDA_RI\Figure 7 - 5th Street Sample Locations.mxd4/4/2016bmailhes

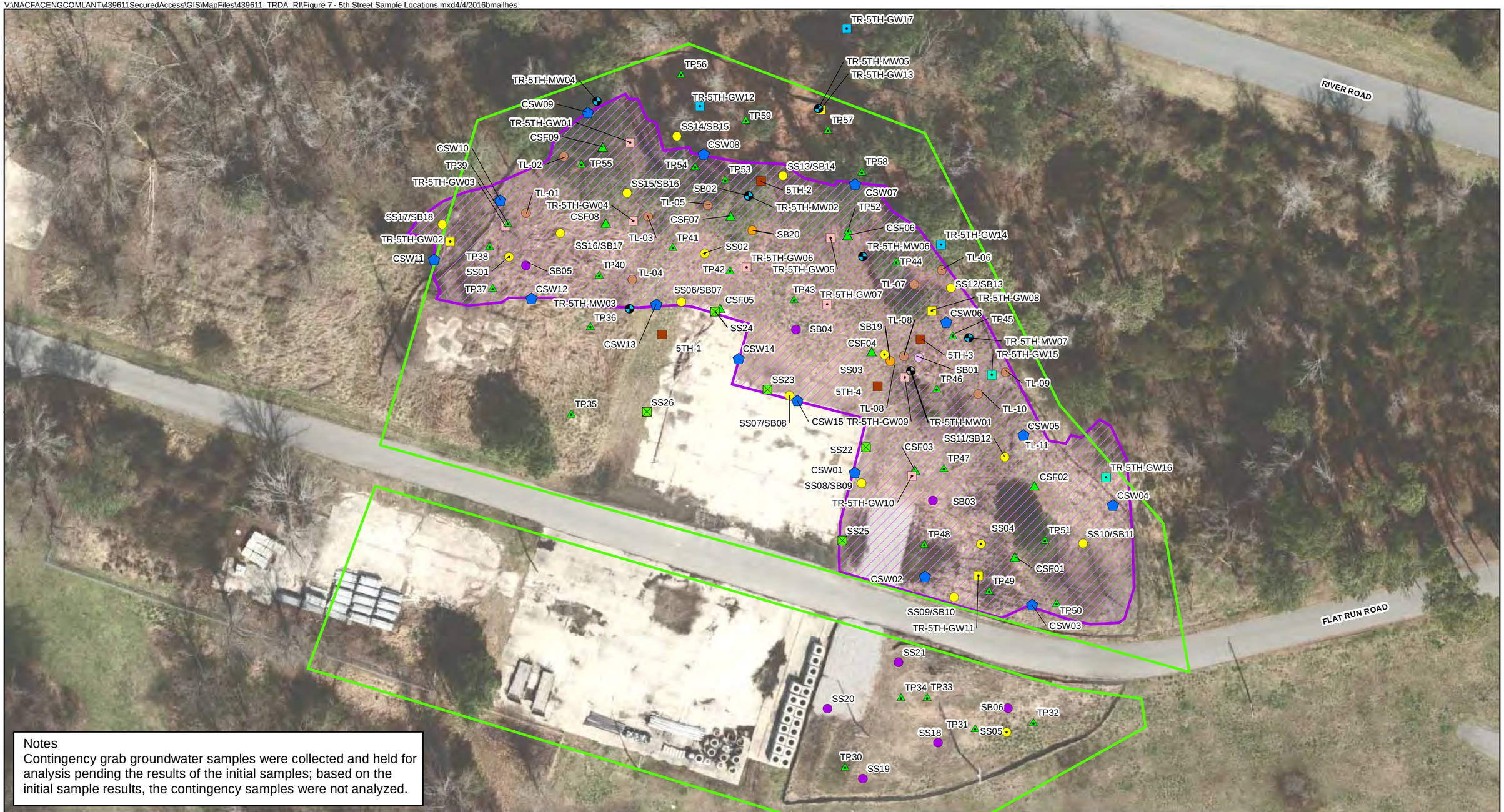

Notes
Contingency grab groundwater samples were collected and held for analysis pending the results of the initial samples; based on the initial sample results, the contingency samples were not analyzed.

Legend

Phase I Sample Locations
- Composite Surface Soil Sample Location
- Geophysical Location
- 2012 Grab Sample Location
- Subsurface Soil Sample Location
- Subsurface Soil/Grab Groundwater Sample Location
- Test Pit
- Abandoned Monitoring Well Location

RA Locations
- Floor Sample Location
- Wall Sample Location

Phase II Sample Locations
- Contingency Grab Groundwater Sample
- Shallow Grab Groundwater Sample Location
- Shallow/Deep Grab Groundwater Sample Location
- Deep Grab Groundwater Sample
- Surface/Subsurface Soil Sample Location
- Subsurface Soil Sample Location
- Monitoring Well

- Surface Soil Sample Location
- RA Excavation Extent
- 2013 Geophysical Survey Extent

N
W E
S

0 25 50
Feet

Figure 7
5th Street Disposal Area Sample Locations
TRDA Remedial Investigation Report
Harvey Point Defense Testing Activity
Hertford, North Carolina

ch2m

V:\NACFACENGCOMLANT\439611SecuredAccess\GIS\MapFiles\439611_TRDA_RI\Figure 8 - TRDA Background Sample Locations.mxd3/30/2016bmailhes

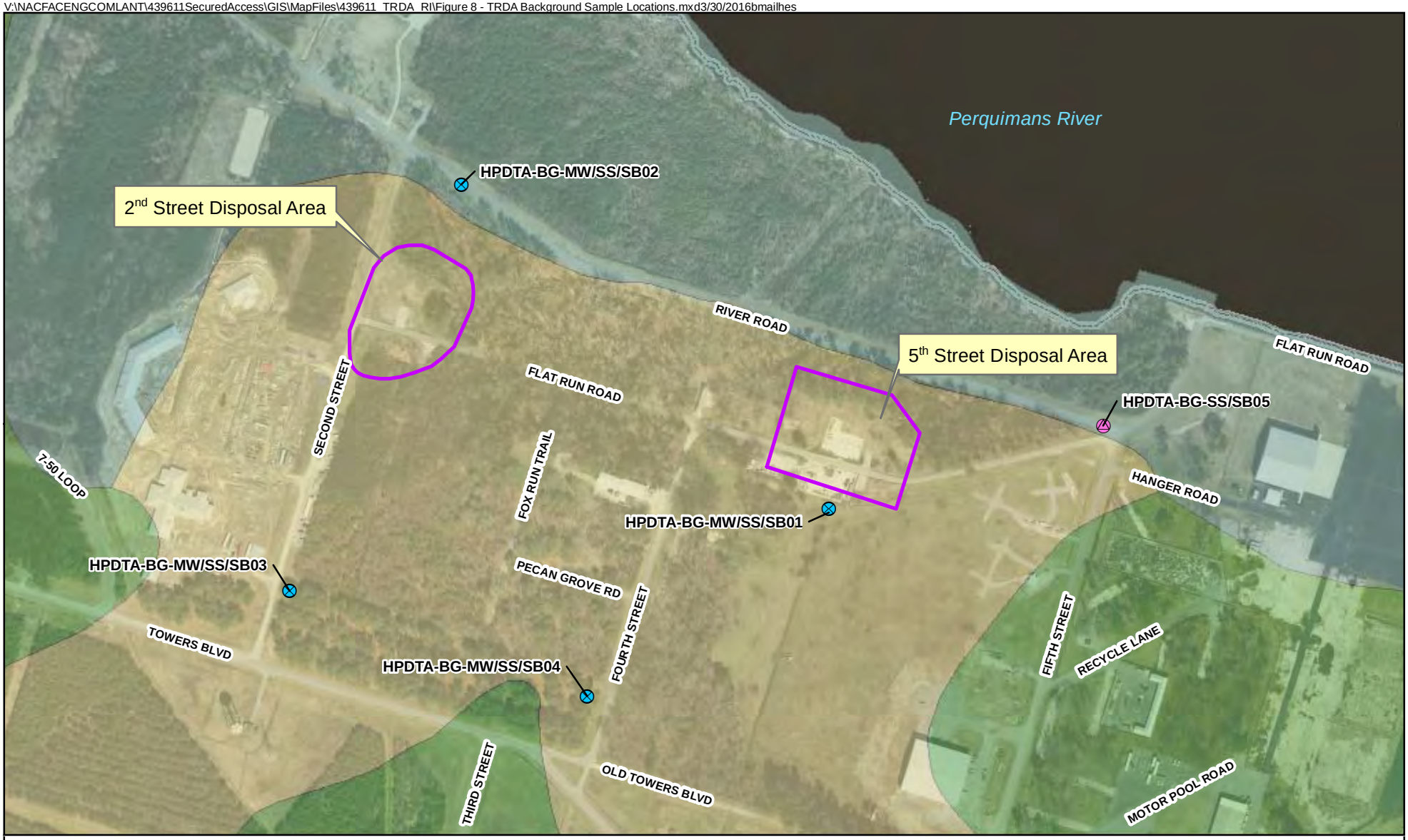

Legend

- Background Groundwater, Surface Soil, and Subsurface Soil Sample Location
- Background Surface Soil and Subsurface Soil Sample Location
- Initial Site Boundary
- Installation Boundary
- Dogue Fine Sandy Loam
- Roanoke Fine Sandy Loam
- Udorthents, Loamy

N
W E
S

0 200 400
Feet

Figure 8
TRDA Background Sample Locations
TRDA Remedial Investigation Report
Harvey Point Defense Testing Activity
Hertford, North Carolina

ch2m

V:\NACFACENGCOMLANT\439611SecuredAccess\GIS\MapFiles\439611_TRDA_RI\Figure 9 - GW Contour Map.mxd3/30/2016bmailhes

Legend

- Background Monitoring Well Location
- Monitoring Well Location
- Initial Site Boundary
- Groundwater Contour (dashed where inferred)
- Groundwater Flow Direction
- Installation Boundary

Notes:
Monitoring wells gauged on February 17, 2016
Potentiometric surface contours have been interpolated between monitoring well locations. Actual conditions may differ from those shown on this figure.

N
W E
S

0 100 200
Feet

Figure 9
Groundwater Contour Map
TRDA Remedial Investigation
Harvey Point Defense Testing Activity
Hertford, North Carolina

ch2m

V:\NACFACENGCOMLANT\439611SecuredAccess\GIS\MapFiles\439611_TRDA_RI\Figure 10 - Location of Geological Cross Sections.mxd4/4/2016bmailhes

Legend

- Abandoned Monitoring Well Location
- Monitoring Well Location
- Grab Groundwater Sample Location
- RA Excavation Extent
- Cross Section
- Groundwater Contour (dashed where inferred)
- Groundwater Flow Direction
- Installation Boundary

N
W E
S

0 75 150
Feet

Figure 10
Location of Geological Cross Sections
TRDA Remedial Investigation Report
Harvey Point Defense Testing Activity
Hertford, North Carolina

ch2m

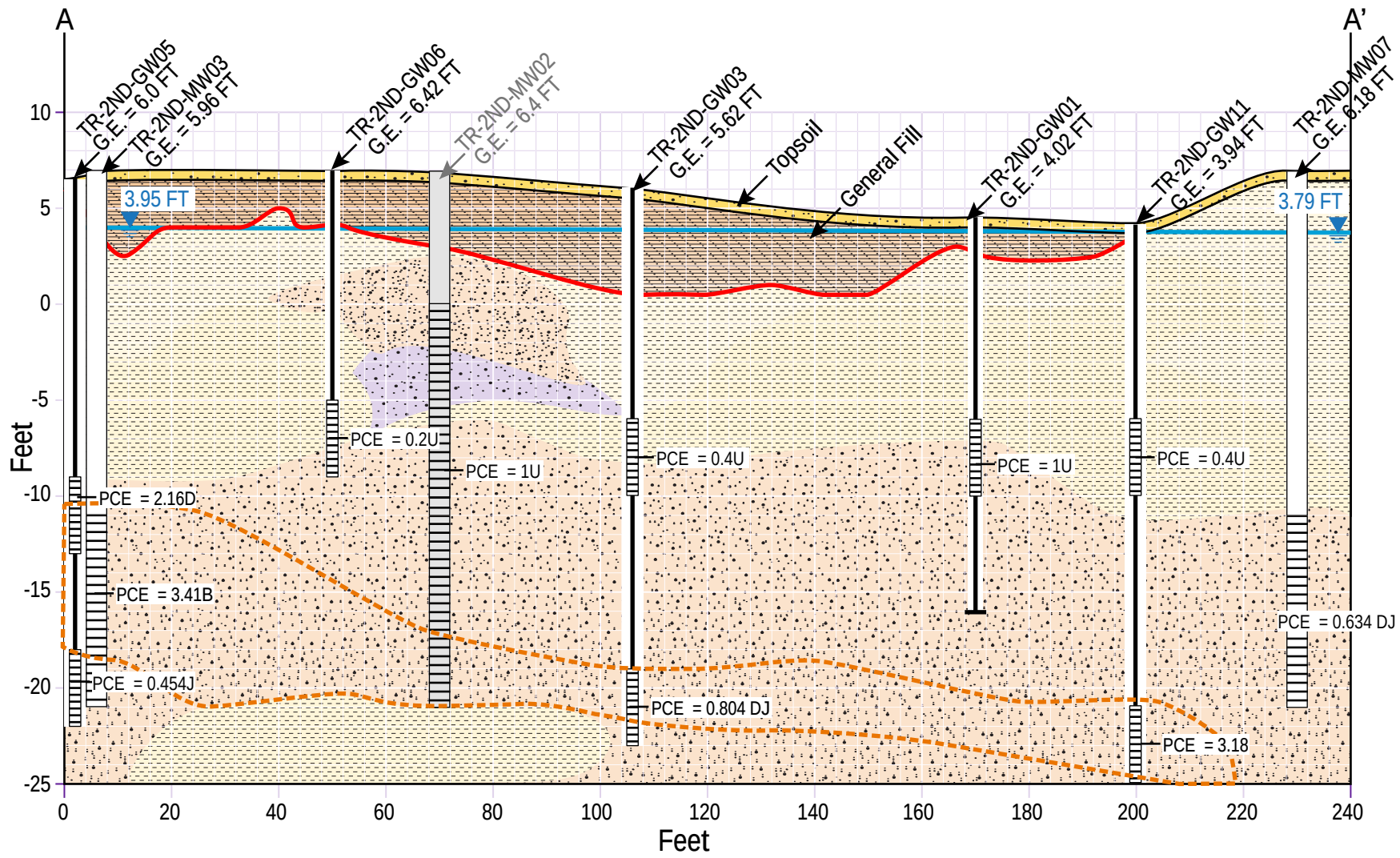

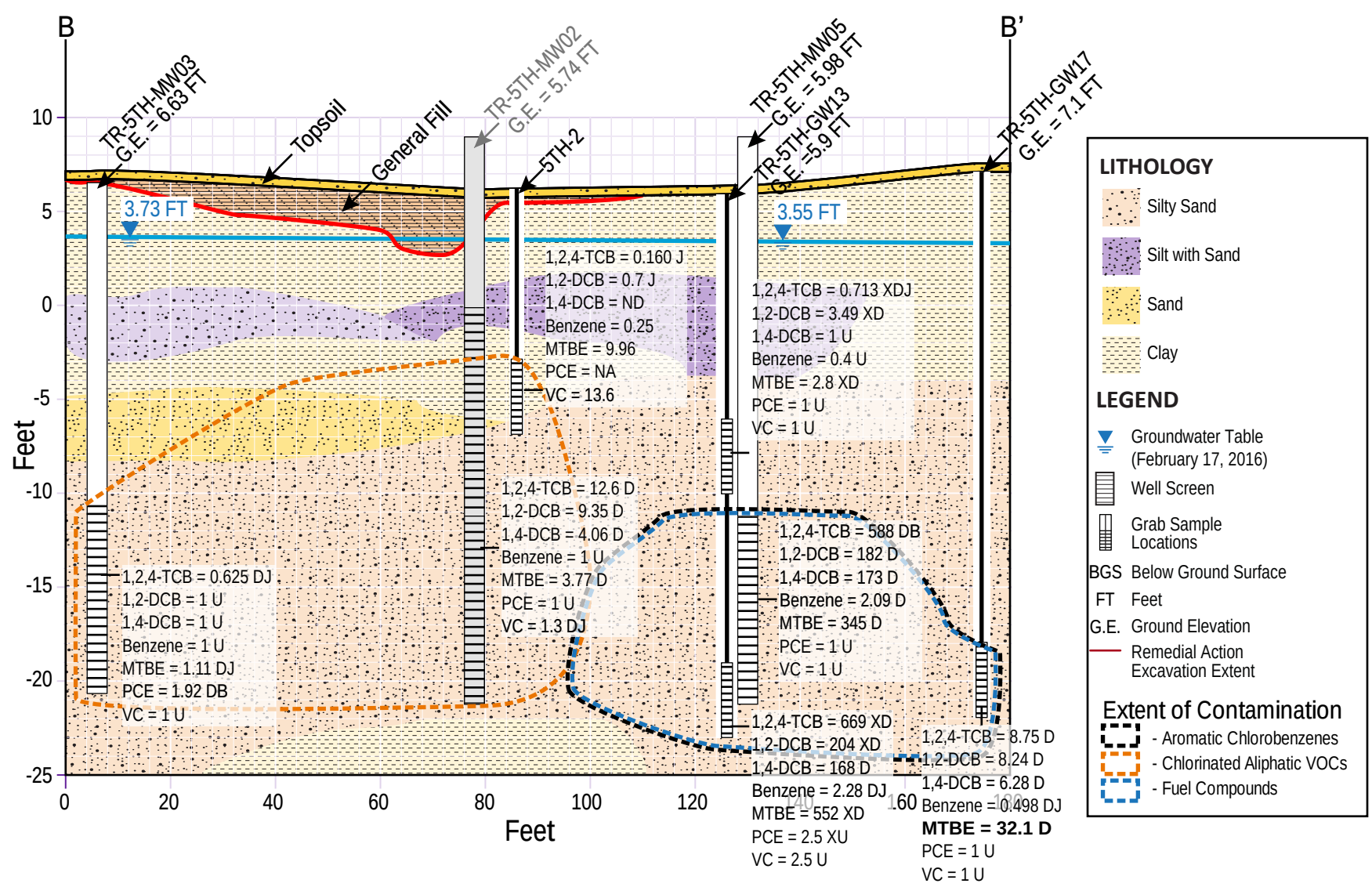

Notes:
Bold text indicates exceedance of the NC2LGW criteria or the NC GW-IMAC criteria
TCB - Trichlorobenzene
DCB - Dichlorobenzene
MTBE - Methyl-tert-Butyl Ether
PCE - Tetrachloroethene
VC - Vinyl chloride
B - Analyte also detected in an associated laboratory blank.
D - Compound identified in an analysis at a secondary dilution factor.
J - Analyte present. Value may or may not be accurate or precise.
NA - Not available
ND - The material was analyzed for, but not detected. Sampled by others and reported as ND
U - The material was analyzed for, but not detected.
X - The parameter shows a potential positive bias on a reported concentration due to an ICV or CCV exceedance.
Monitoring well samples were collected at the midpoint of the screen interval.
Concentrations shown in micrograms per liter (UG/L)
This cross-section is interpretive and was prepared by interpolation between monitoring well borings and test pit locations. Actual conditions between monitoring well borings and test pit locations may differ from this figure. Vertical elevations in US Survey Feet (NAVD88 Vertical Datum).

100_MWHPDTA_1_DEN

Figure 11
Geological Cross-Sections
TRDA Remedial Investigation Report
Harvey Point Defense Testing Activity
Hertford, North Carolina

EN0310161126VBO

ch2m

V:\NACFACENGCOMLANT\439611SecuredAccess\GIS\MapFiles\439611_TRDA_RI\Figure 12 - 2nd Street Remaining Soil Sampling Results – Exceedances Only.mxd4/4/2016bmailhes

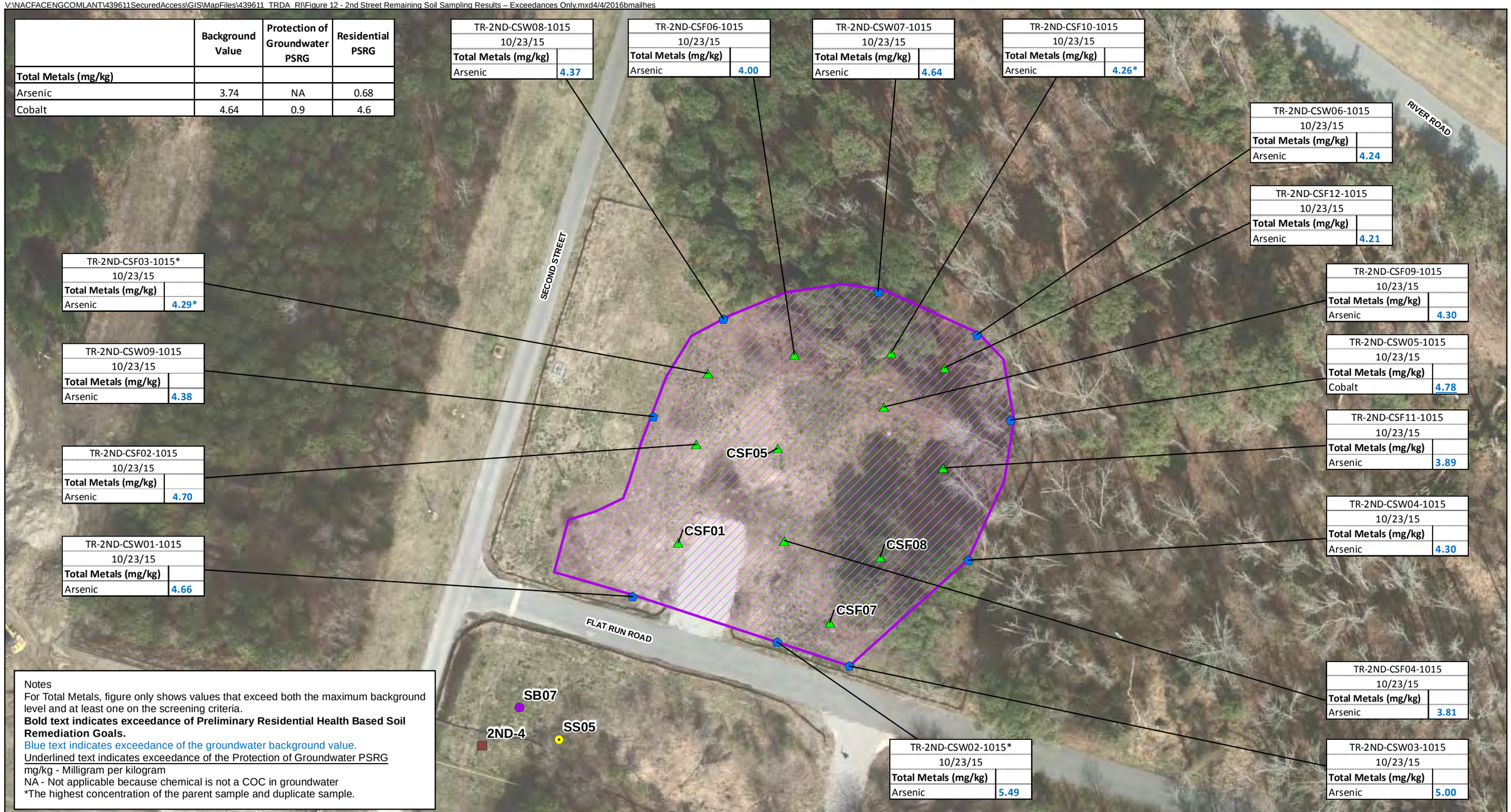

	Background Value	Protection of Groundwater PSRG	Residential PSRG
Total Metals (mg/kg)			
Arsenic	3.74	NA	0.68
Cobalt	4.64	0.9	4.6

Notes
For Total Metals, figure only shows values that exceed both the maximum background level and at least one on the screening criteria.
Bold text indicates exceedance of Preliminary Residential Health Based Soil Remediation Goals.
Blue text indicates exceedance of the groundwater background value.
Underlined text indicates exceedance of the Protection of Groundwater PSRG
mg/kg - Milligram per kilogram
NA - Not applicable because chemical is not a COC in groundwater
*The highest concentration of the parent sample and duplicate sample.

Legend
- Floor Confirmation Sample Location (RA)
- Wall Confirmation Sample Location (RA)
- Surface Soil Sample Location (Phase I)
- Subsurface Soil Sample Location (Phase I)
- 2012 Subsurface Soil Sample Location
- RA Excavation Extent

N W E S

0 25 50 Feet

Figure 12
2nd Street Disposal Area Remaining Soil Sample Results - Exceedances Only
TRDA Remedial Investigation Report
Harvey Point Defense Testing Activity
Hertford, North Carolina

ch2m

V:\NACFACENGCOMLANT\439611SecuredAccess\GIS\MapFiles\439611_TRDA_RI\Figure 13 - 2nd Street Groundwater Results - Exceedances Only.mxd4/4/2016bmailhes

	Background Value	Regulatory Standard	Screening Criteria
Volatile Organic Compounds (UG/L)			
Tetrachloroethene	NA	0.7	NC2LGW
Vinyl Chloride	NA	0.03	NC2LGW
Semivolatile Organic Compounds (UG/L)			
Bis(2-Ethylhexyl)phthalate	NA	3	NC2LGW
Total Metals (UG/L)			
Cobalt	6.75	1	NC GW-IMAC
Manganese	367	50	NC2LGW

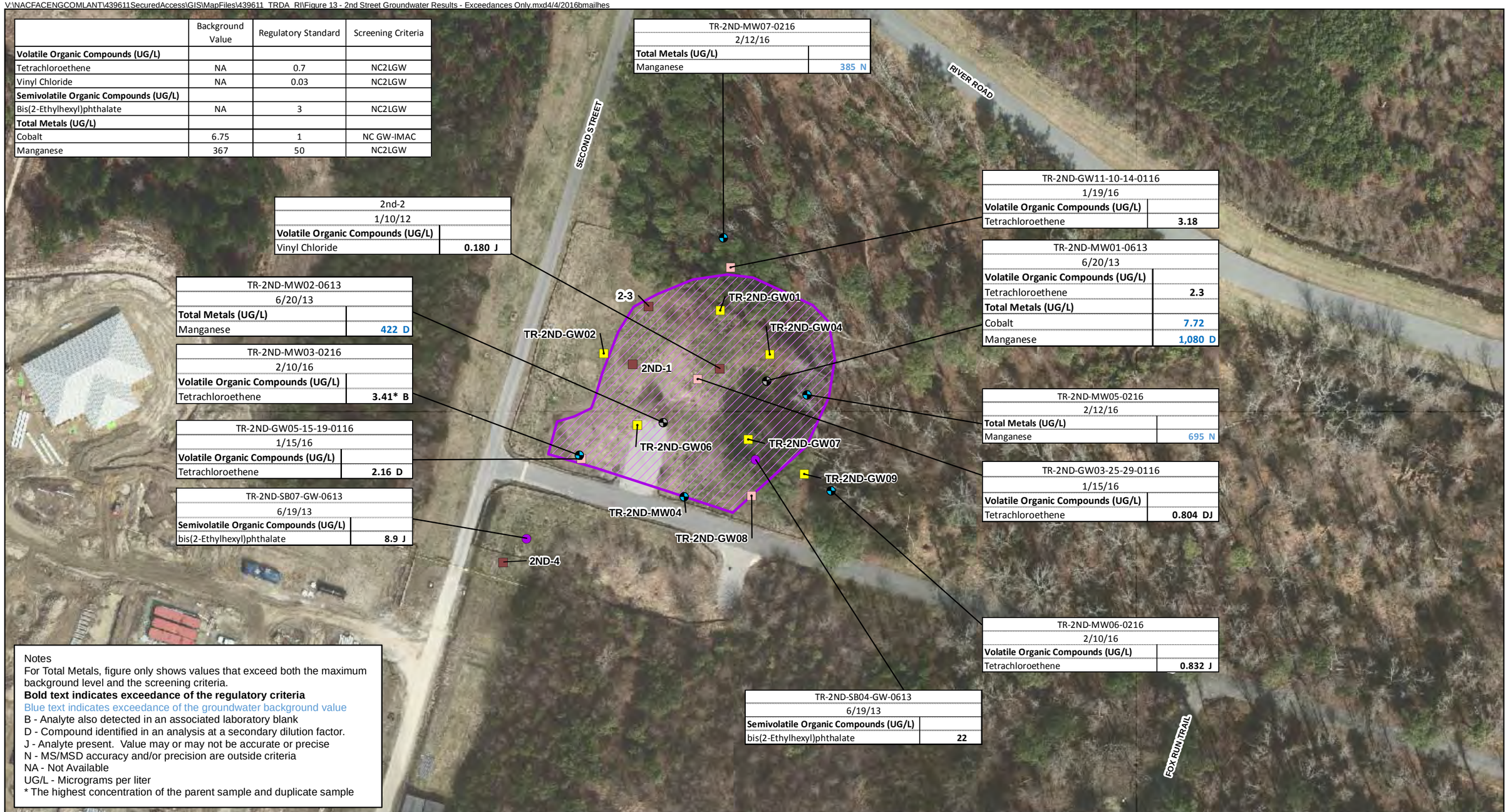

TR-2ND-MW07-0216	
2/12/16	
Total Metals (UG/L)	
Manganese	385 N

2nd-2	
1/10/12	
Volatile Organic Compounds (UG/L)	
Vinyl Chloride	**0.180 J**

TR-2ND-MW02-0613	
6/20/13	
Total Metals (UG/L)	
Manganese	422 D

TR-2ND-MW03-0216	
2/10/16	
Volatile Organic Compounds (UG/L)	
Tetrachloroethene	**3.41* B**

TR-2ND-GW05-15-19-0116	
1/15/16	
Volatile Organic Compounds (UG/L)	
Tetrachloroethene	**2.16 D**

TR-2ND-SB07-GW-0613	
6/19/13	
Semivolatile Organic Compounds (UG/L)	
bis(2-Ethylhexyl)phthalate	**8.9 J**

TR-2ND-GW11-10-14-0116	
1/19/16	
Volatile Organic Compounds (UG/L)	
Tetrachloroethene	**3.18**

TR-2ND-MW01-0613	
6/20/13	
Volatile Organic Compounds (UG/L)	
Tetrachloroethene	**2.3**
Total Metals (UG/L)	
Cobalt	7.72
Manganese	1,080 D

TR-2ND-MW05-0216	
2/12/16	
Total Metals (UG/L)	
Manganese	695 N

TR-2ND-GW03-25-29-0116	
1/15/16	
Volatile Organic Compounds (UG/L)	
Tetrachloroethene	**0.804 DJ**

TR-2ND-MW06-0216	
2/10/16	
Volatile Organic Compounds (UG/L)	
Tetrachloroethene	**0.832 J**

TR-2ND-SB04-GW-0613	
6/19/13	
Semivolatile Organic Compounds (UG/L)	
bis(2-Ethylhexyl)phthalate	**22**

Notes
For Total Metals, figure only shows values that exceed both the maximum background level and the screening criteria.
Bold text indicates exceedance of the regulatory criteria
Blue text indicates exceedance of the groundwater background value
B - Analyte also detected in an associated laboratory blank
D - Compound identified in an analysis at a secondary dilution factor.
J - Analyte present. Value may or may not be accurate or precise
N - MS/MSD accuracy and/or precision are outside criteria
NA - Not Available
UG/L - Micrograms per liter
* The highest concentration of the parent sample and duplicate sample

Legend
- Abandoned Monitoring Well Location
- Monitoring Well Location
- Shallow/Deep Grab Groundwater Sample (TCL VOCs Analysis Only)
- Shallow Grab Groundwater Sample (TCL VOCs Analysis Only)
- Grab Groundwater Sample (TCL VOCs and TCL SVOCs Analysis Only)
- 2012 Grab Groundwater Sample Location
- RA Excavation Extent

N W E S

0 40 80 Feet

Figure 13
2nd Street Disposal Area Groundwater Sample Results - Exceedances Only
TRDA Remedial Investigation Report
Harvey Point Defense Testing Activity
Hertford, North Carolina

ch2m

V:\NACFACENGCOMLANT\439611SecuredAccess\GIS\MapFiles\439611_TRDA_RI\Figure 14 - 2nd Street Disposal Area GW COC Results - VOCs - All Aquifers.mxd4/4/2016bmailhes

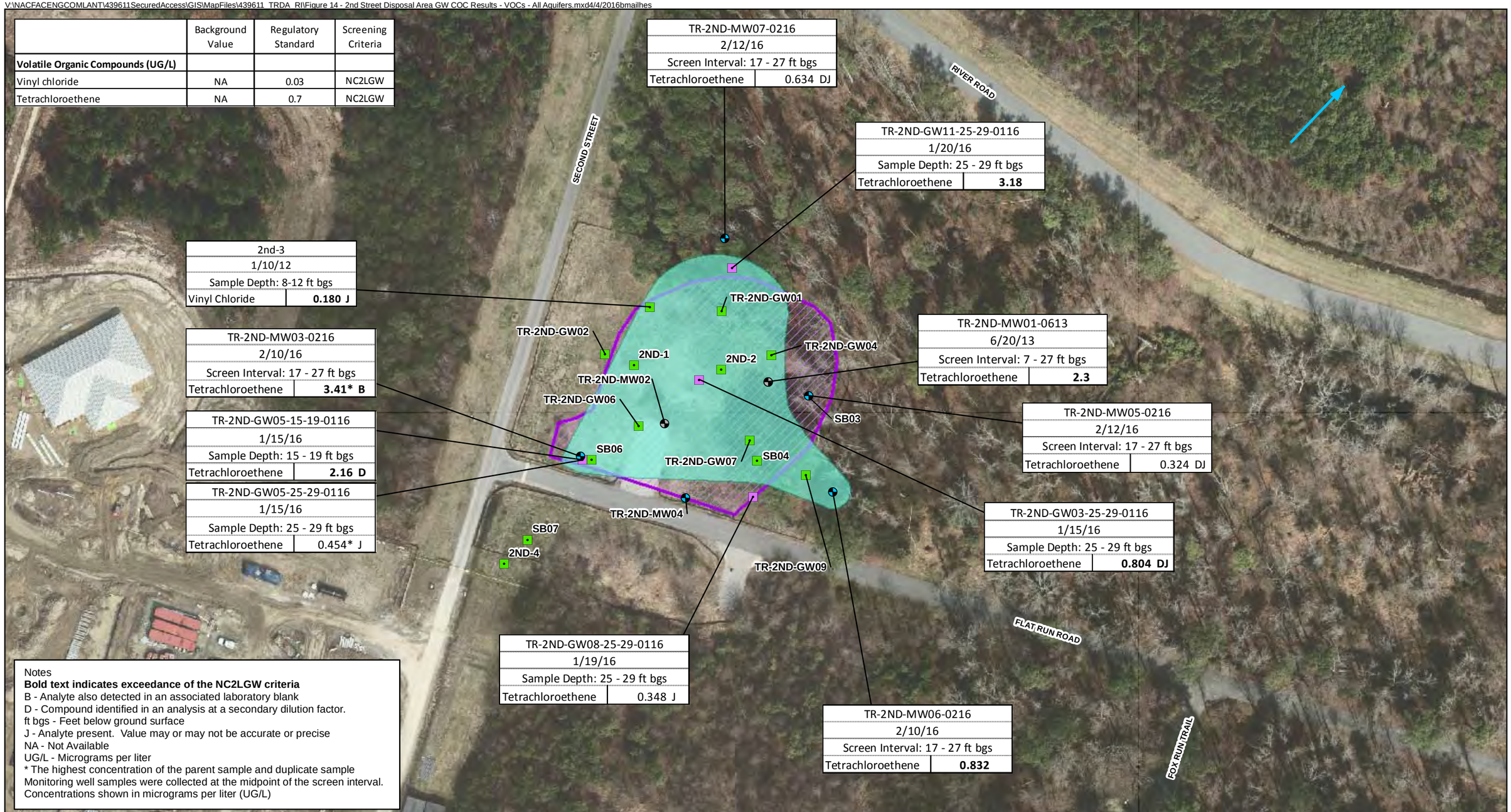

	Background Value	Regulatory Standard	Screening Criteria
Volatile Organic Compounds (UG/L)			
Vinyl chloride	NA	0.03	NC2LGW
Tetrachloroethene	NA	0.7	NC2LGW

TR-2ND-MW07-0216	
2/12/16	
Screen Interval: 17 - 27 ft bgs	
Tetrachloroethene	0.634 DJ

TR-2ND-GW11-25-29-0116	
1/20/16	
Sample Depth: 25 - 29 ft bgs	
Tetrachloroethene	**3.18**

2nd-3	
1/10/12	
Sample Depth: 8-12 ft bgs	
Vinyl Chloride	**0.180 J**

TR-2ND-MW03-0216	
2/10/16	
Screen Interval: 17 - 27 ft bgs	
Tetrachloroethene	**3.41* B**

TR-2ND-MW01-0613	
6/20/13	
Screen Interval: 7 - 27 ft bgs	
Tetrachloroethene	**2.3**

TR-2ND-GW05-15-19-0116	
1/15/16	
Sample Depth: 15 - 19 ft bgs	
Tetrachloroethene	**2.16 D**

TR-2ND-MW05-0216	
2/12/16	
Screen Interval: 17 - 27 ft bgs	
Tetrachloroethene	0.324 DJ

TR-2ND-GW05-25-29-0116	
1/15/16	
Sample Depth: 25 - 29 ft bgs	
Tetrachloroethene	0.454* J

TR-2ND-GW03-25-29-0116	
1/15/16	
Sample Depth: 25 - 29 ft bgs	
Tetrachloroethene	**0.804 DJ**

TR-2ND-GW08-25-29-0116	
1/19/16	
Sample Depth: 25 - 29 ft bgs	
Tetrachloroethene	0.348 J

TR-2ND-MW06-0216	
2/10/16	
Screen Interval: 17 - 27 ft bgs	
Tetrachloroethene	**0.832**

Notes
Bold text indicates exceedance of the NC2LGW criteria
B - Analyte also detected in an associated laboratory blank
D - Compound identified in an analysis at a secondary dilution factor.
ft bgs - Feet below ground surface
J - Analyte present. Value may or may not be accurate or precise
NA - Not Available
UG/L - Micrograms per liter
* The highest concentration of the parent sample and duplicate sample
Monitoring well samples were collected at the midpoint of the screen interval.
Concentrations shown in micrograms per liter (UG/L)

Legend
- Abandoned Monitoring Well Location
- Monitoring Well Location
- Shallow Grab Groundwater Sample
- Shallow/Deep Grab Groundwater Sample
- RA Excavation Extent
- VOC Exceedances Plume
- Groundwater Flow Direction

N
W E
S

0 40 80
Feet

Figure 14
2nd Street Disposal Area Groundwater COC Results - VOCs
TRDA Remedial Investigation Report
Harvey Point Defense Testing Activity
Hertford, North Carolina

ch2m

V:\NACFACENGCOMLANT\439611SecuredAccess\GIS\MapFiles\439611_TRDA_RI\Figure 15 - 2nd Street Disposal Area GW COC Results - Total Metals.mxd4/4/2016bmailhes

	Background Value	Regulatory Standard	Screening Criteria
Total Metals (UG/L)			
Cobalt	6.75	1	NC GW-IMAC
Manganese	367	50	NC2LGW

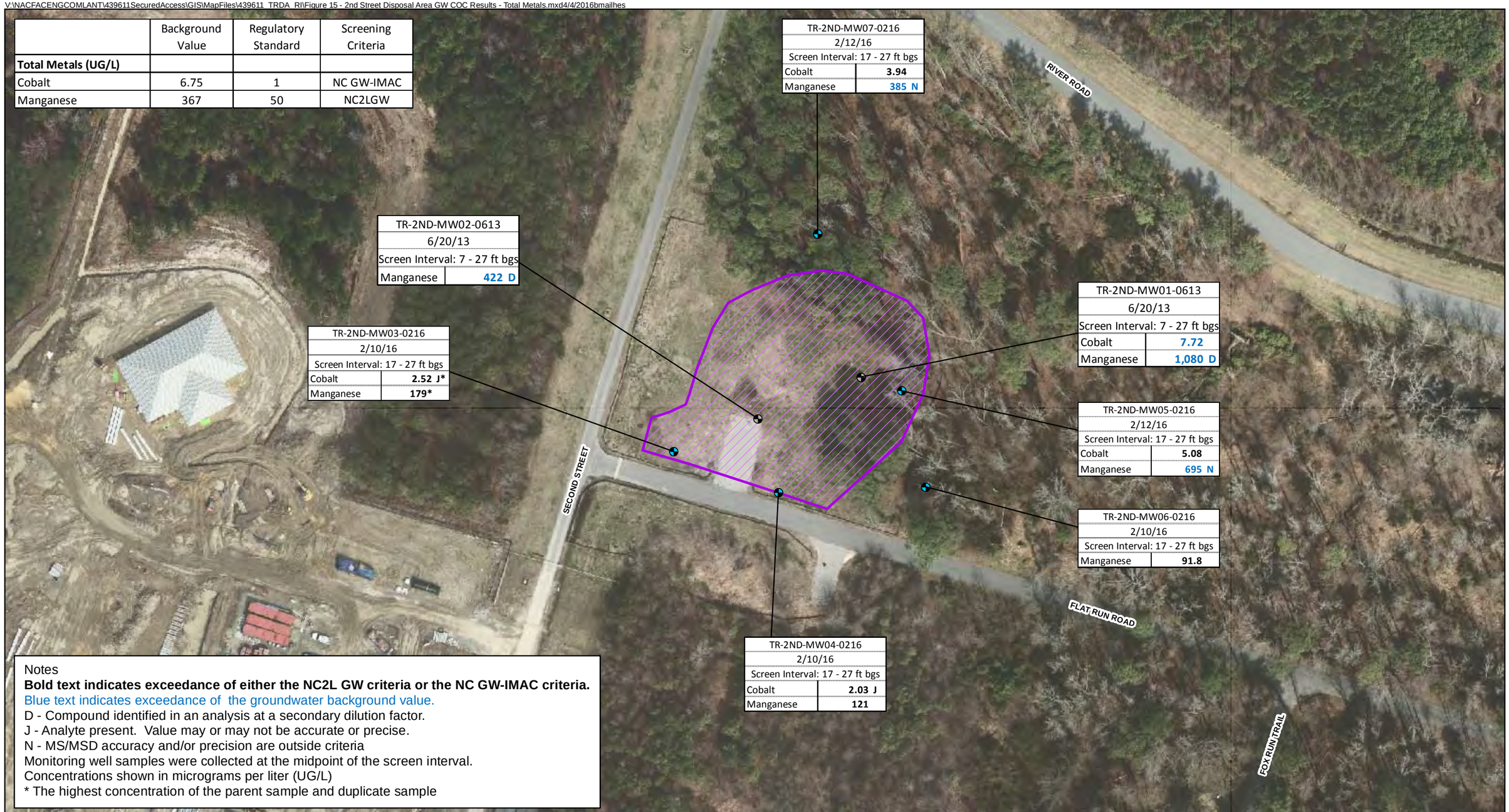

Notes
Bold text indicates exceedance of either the NC2L GW criteria or the NC GW-IMAC criteria.
Blue text indicates exceedance of the groundwater background value.
D - Compound identified in an analysis at a secondary dilution factor.
J - Analyte present. Value may or may not be accurate or precise.
N - MS/MSD accuracy and/or precision are outside criteria
Monitoring well samples were collected at the midpoint of the screen interval.
Concentrations shown in micrograms per liter (UG/L)
* The highest concentration of the parent sample and duplicate sample

Legend
- Abandoned Monitoring Well Location
- Monitoring Well Location
- RA Excavation Extent

N
W E
S

0 40 80
Feet

Figure 15
2nd Street Disposal Area Groundwater COC Results - Metals
TRDA Remedial Investigation Report
Harvey Point Defense Testing Activity
Hertford, North Carolina

ch2m

V:\NACFACENGCOMLANT\439611SecuredAccess\GIS\MapFiles\439611_TRDA_RI\Figure 16 - 5th Street Remaining Soil Sampling Results - Exceedances Only.mxd4/4/2016bmailhes

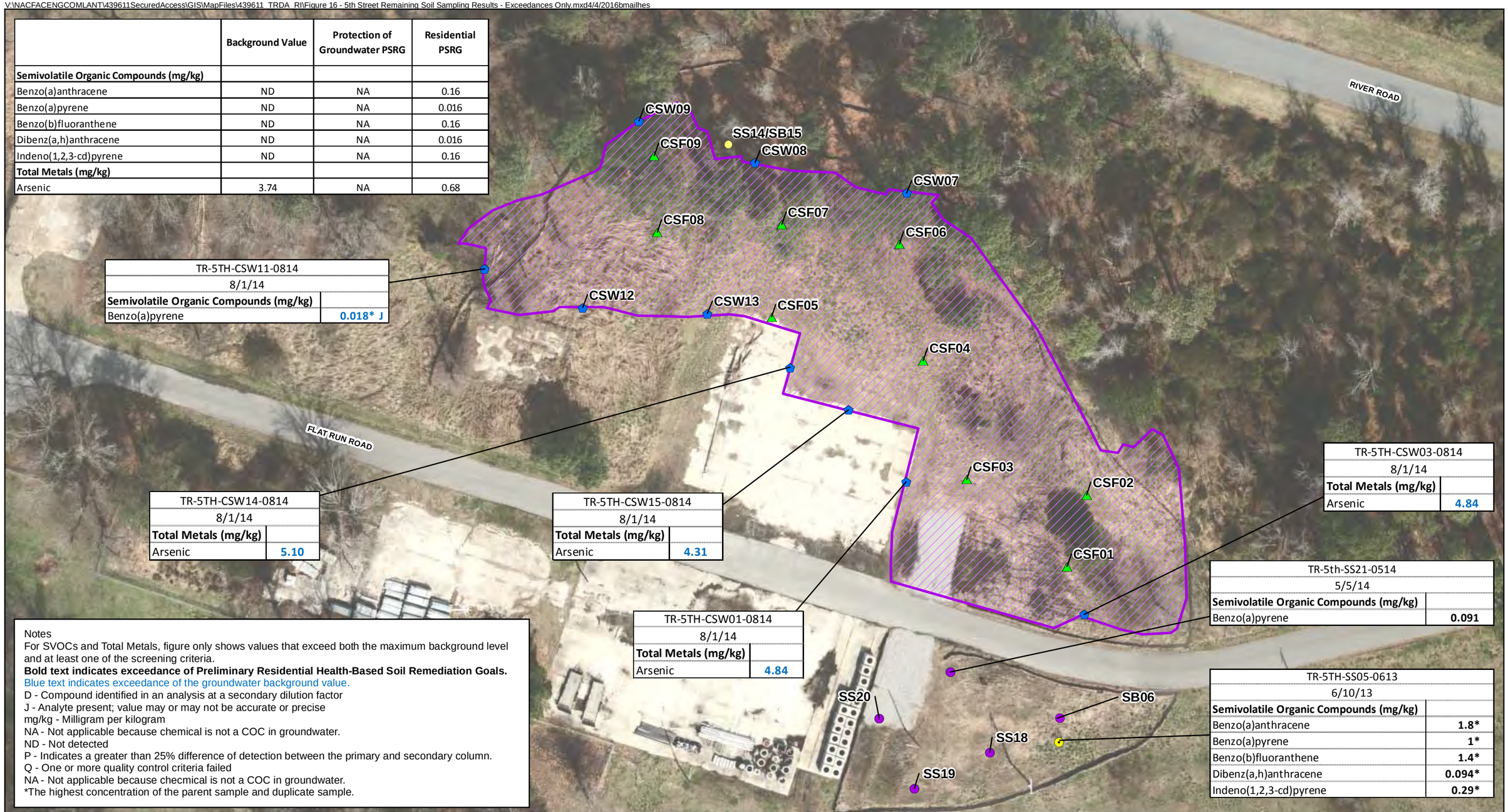

	Background Value	Protection of Groundwater PSRG	Residential PSRG
Semivolatile Organic Compounds (mg/kg)			
Benzo(a)anthracene	ND	NA	0.16
Benzo(a)pyrene	ND	NA	0.016
Benzo(b)fluoranthene	ND	NA	0.16
Dibenz(a,h)anthracene	ND	NA	0.016
Indeno(1,2,3-cd)pyrene	ND	NA	0.16
Total Metals (mg/kg)			
Arsenic	3.74	NA	0.68

TR-5TH-CSW11-0814	
8/1/14	
Semivolatile Organic Compounds (mg/kg)	
Benzo(a)pyrene	**0.018* J**

TR-5TH-CSW14-0814	
8/1/14	
Total Metals (mg/kg)	
Arsenic	**5.10**

TR-5TH-CSW15-0814	
8/1/14	
Total Metals (mg/kg)	
Arsenic	**4.31**

TR-5TH-CSW01-0814	
8/1/14	
Total Metals (mg/kg)	
Arsenic	**4.84**

TR-5TH-CSW03-0814	
8/1/14	
Total Metals (mg/kg)	
Arsenic	**4.84**

TR-5th-SS21-0514	
5/5/14	
Semivolatile Organic Compounds (mg/kg)	
Benzo(a)pyrene	**0.091**

TR-5TH-SS05-0613	
6/10/13	
Semivolatile Organic Compounds (mg/kg)	
Benzo(a)anthracene	**1.8***
Benzo(a)pyrene	**1***
Benzo(b)fluoranthene	**1.4***
Dibenz(a,h)anthracene	**0.094***
Indeno(1,2,3-cd)pyrene	**0.29***

Notes
For SVOCs and Total Metals, figure only shows values that exceed both the maximum background level and at least one of the screening criteria.
Bold text indicates exceedance of Preliminary Residential Health-Based Soil Remediation Goals.
Blue text indicates exceedance of the groundwater background value.
D - Compound identified in an analysis at a secondary dilution factor
J - Analyte present; value may or may not be accurate or precise
mg/kg - Milligram per kilogram
NA - Not applicable because chemical is not a COC in groundwater.
ND - Not detected
P - Indicates a greater than 25% difference of detection between the primary and secondary column.
Q - One or more quality control criteria failed
NA - Not applicable because checmical is not a COC in groundwater.
*The highest concentration of the parent sample and duplicate sample.

Legend
- Surface Soil Sample Location (Phase I)
- Surface Soil Sample Location (Phase II)
- Subsurface Soil Sample Location (Phase I)
- Surface/Subsurface Sample Location (Phase II)
- Floor Confirmation Sample Location (RA)
- Wall Confirmation Sample Location (RA)
- RA Excavation Extent

N
W E
S

0 25 50
Feet

Figure 16
5th Street Disposal Area Remaining Soil Sample Results - Exceedances Only
TRDA Remedial Investigation Report
Harvey Point Defense Testing Activity
Hertford, North Carolina

ch2m

V:\NACFACENGCOMLANT\439611SecuredAccess\GIS\MapFiles\439611_TRDA_RI\Figure 17 - 5th Street Disposal Area Groundwater Results - Exceedances Only.mxd4/4/2016bmailhes

	Background Values	Regulatory Standard	Screening Criteria
Volatile Organic Compounds (UG/L)			
1,2,4-Trichlorobenzene	NA	70	NC2LGW
1,2-Dichlorobenzene	NA	20	NC2LGW
1,4-Dichlorobenzene	NA	6	NC2LGW
Benzene	NA	1	NC2LGW
Methyl-tert-Butyl Ether (MTBE)	NA	20	NC2LGW
Tetrachloroethene	NA	0.7	NC2LGW
Vinyl chloride	NA	0.03	NC2LGW
Semivolatile Organic Compounds (UG/L)			
bis(2-Ethylhexyl)phthalate	ND	3	NC2LGW
Total Metals (UG/L)			
Cobalt	6.75	1	NC GW-IMAC
Iron	629	300	NC2LGW
Manganese	367	50	NC2LGW
Vanadium	1	0.3	NC GW-IMAC

TR-5TH-GW12-25-29-0216	
2/4/16	
Volatile Organic Compounds (UG/L)	
1,2-Dichlorobenzene	**34.2 D**
1,4-Dichlorobenzene	**11.3 D**

TR-5TH-GW17-25-29-0216	
2/3/16	
Volatile Organic Compounds (UG/L)	
1,4-Dichlorobenzene	**6.28 D**
Methyl-tert-Butyl Ether (MTBE)	**32.1 D**

TR-5TH-MW05-0216	
2/11/16	
Volatile Organic Compounds (UG/L)	
1,2,4-Trichlorobenzene	**588 DB**
1,2-Dichlorobenzene	**182 D**
1,4-Dichlorobenzene	**173 D**
Benzene	**2.09 D**
Methyl-tert-Butyl Ether (MTBE)	**345 D**

5th-2	
1/10/12	
Volatile Organic Compounds (UG/L)	
Vinyl Chloride	**13.6**

TR-5TH-GW13-25-29-0116	
1/14/16	
Volatile Organic Compounds (UG/L)	
1,2,4-Trichlorobenzene	**669 XD**
1,2-Dichlorobenzene	**204 XD**
1,4-Dichlorobenzene	**168 D**
Benzene	**2.28 DJ**
Methyl-tert-Butyl Ether (MTBE)	**552 XD**

TR-5TH-MW04-0216	
2/16/16	
Total Metals (UG/L)	
Cobalt	20.9
Manganese	902
Vanadium	1.32 J

TR-5TH-MW06-0216	
2/11/16	
Volatile Organic Compounds (UG/L)	
Methyl-tert-Butyl Ether (MTBE)	**86.1 D**
Total Metals (UG/L)	
Cobalt	9.04
Iron	681 Q
Manganese	472
Vanadium	2.95 J

TR-5TH-MW07-0216	
2/11/16	
Total Metals (UG/L)	
Cobalt	11.9
Manganese	1,330

TR-5TH-SB05-GW-0613	
6/18/13	
Semivolatile Organic Compounds (UG/L)	
bis(2-Ethylhexyl)phthalate	**11**

TR-5TH-MW03-0216	
2/9/16	
Volatile Organic Compounds (UG/L)	
Tetrachloroethene	**1.92 DB**
Total Metals (UG/L)	
Cobalt	8.21
Manganese	489
Vanadium	2.35 J

TR-5TH-SB04-GW-0613	
6/17/13	
Semivolatile Organic Compounds (UG/L)	
bis(2-Ethylhexyl)phthalate	**4.9 J**

TR-5TH-MW01-0613	
6/20/13	
Total Metals (UG/L)	
Cobalt	9.18
Iron	1,300 D
Manganese	561 D

TR-5TH-MW02-0216		
Volatile Organic Compounds (UG/L)	6/20/2013	2/11/16
1,2,4-Trichlorobenzene	**1,300 D**	12.6* D
1,2-Dichlorobenzene	**210 D**	9.35* D
1,4-Dichlorobenzene	**260 D**	4.06* D
Benzene	**1.8 J**	1 U
Methyl-tert-Butyl Ether (MTBE)	**270 D**	3.77* D
Vinyl chloride	1 U	**1.3* DJ**
Total Metals (UG/L)		
Cobalt	7.71	10*
Iron	1,550 D	270* Q
Manganese	383 D	480*
Vanadium	5.28	1.83* J

TR-5TH-SB06-GW-0613	
6/18/13	
Semivolatile Organic Compounds (UG/L)	
bis(2-Ethylhexyl)phthalate	**10**

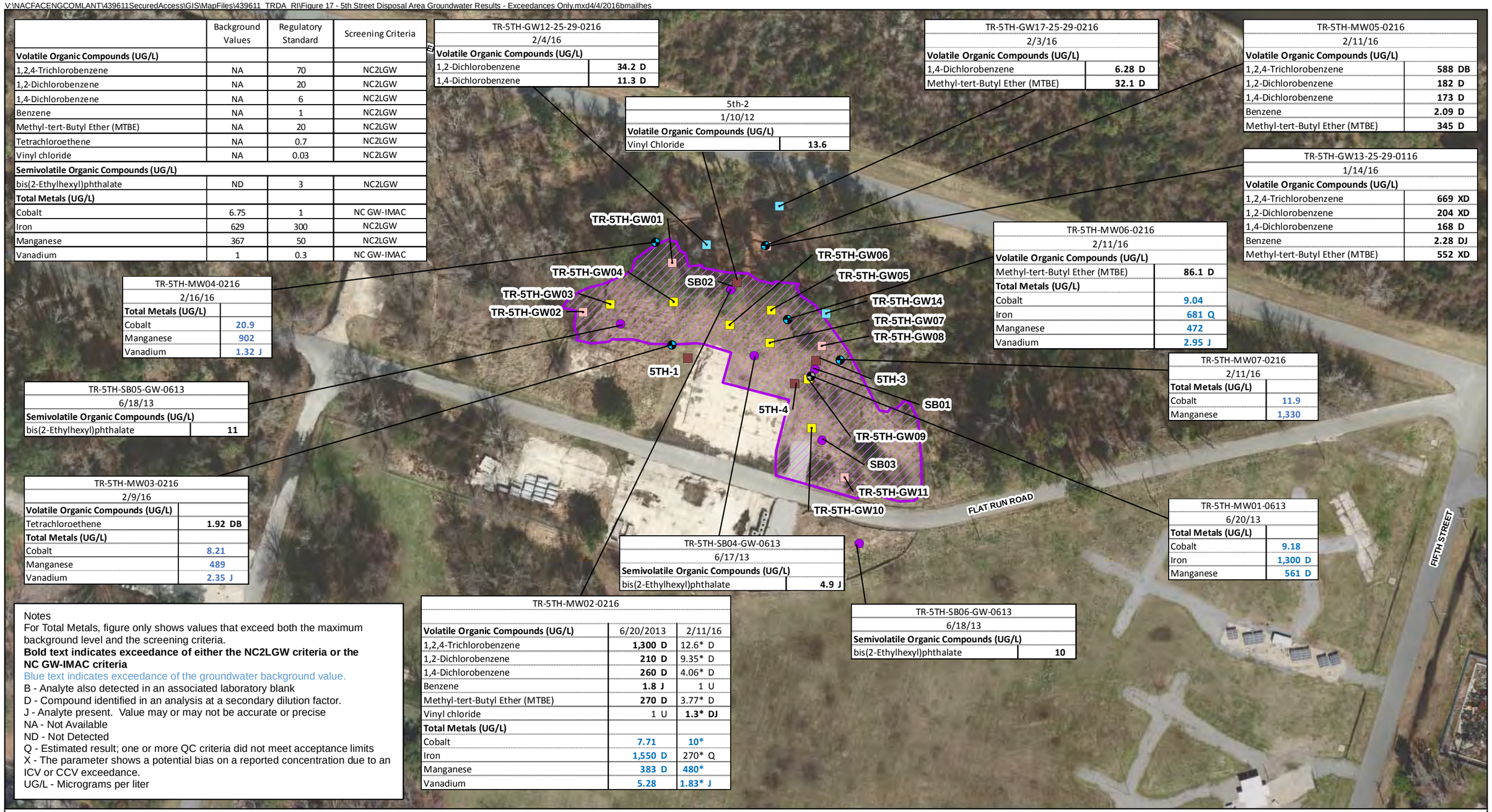

Notes
For Total Metals, figure only shows values that exceed both the maximum background level and the screening criteria.
Bold text indicates exceedance of either the NC2LGW criteria or the NC GW-IMAC criteria
Blue text indicates exceedance of the groundwater background value.
B - Analyte also detected in an associated laboratory blank
D - Compound identified in an analysis at a secondary dilution factor.
J - Analyte present. Value may or may not be accurate or precise
NA - Not Available
ND - Not Detected
Q - Estimated result; one or more QC criteria did not meet acceptance limits
X - The parameter shows a potential bias on a reported concentration due to an ICV or CCV exceedance.
UG/L - Micrograms per liter

Legend
- Abandoned Monitoring Well Location
- Monitoring Well Location
- Shallow Grab Groundwater Sample (VOCs Analysis Only)
- Shallow/Deep Grab Groundwater Sample (VOCs Analysis Only)
- Deep Grab Groundwater Sample (VOCs Analysis Only)
- Grab Groundwater Sample
- 2012 Grab Groundwater Sample
- RA Excavation Extent

N W E S
0 50 100 Feet

Figure 17
5th Street Disposal Area Groundwater Sample Results - Exceedances Only
TRDA Remedial Investigation Report
Harvey Point Defense Testing Activity
Hertford, North Carolina

ch2m

V:\NACFACENGCOMLANT\439611SecuredAccess\GIS\MapFiles\439611_TRDA_RI\Figure 18 - 5th Street Disposal Area GW COC Results - VOCs - All Aquifers.mxd4/5/2016bmailhes

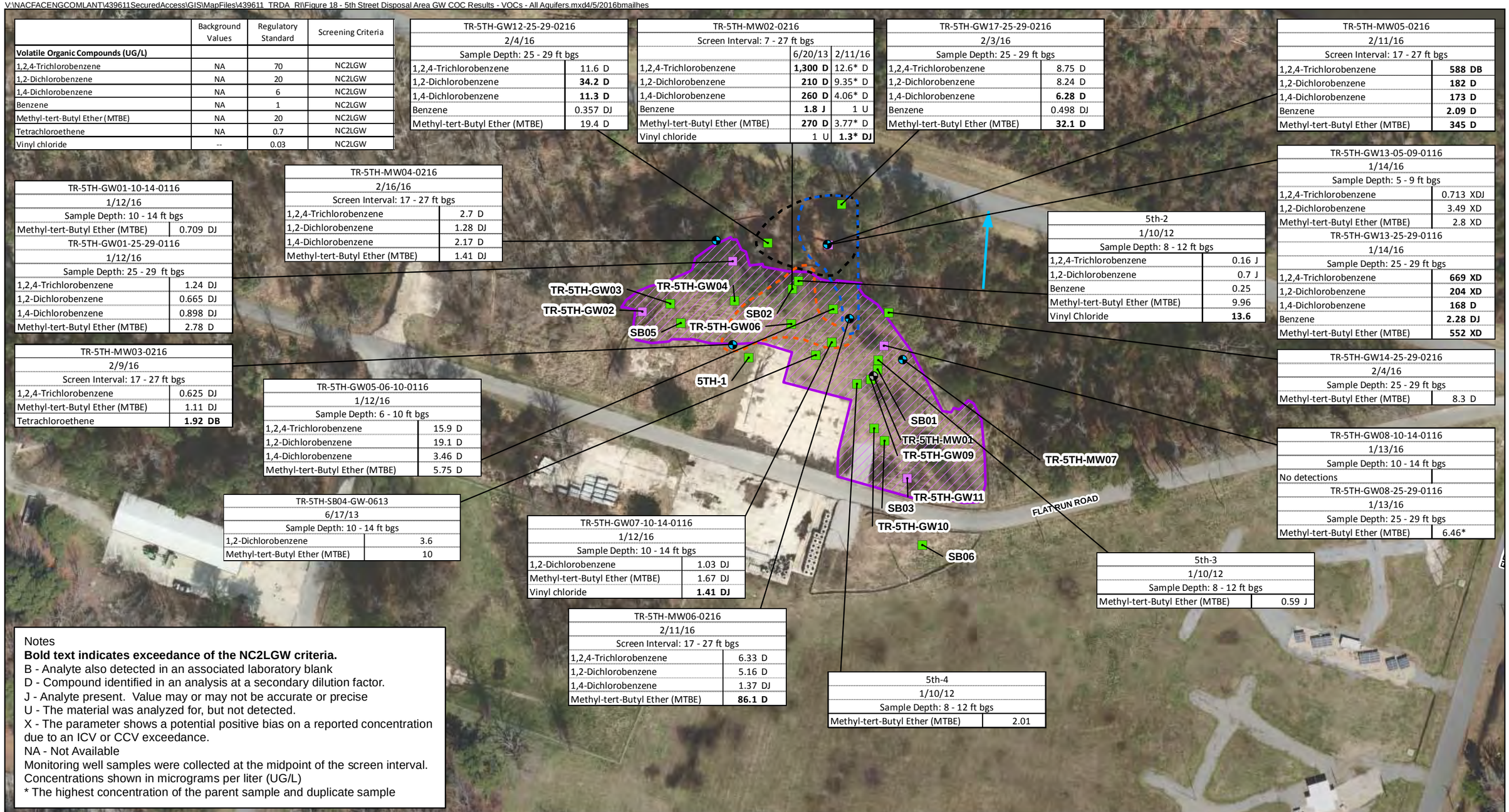

	Background Values	Regulatory Standard	Screening Criteria
Volatile Organic Compounds (UG/L)			
1,2,4-Trichlorobenzene	NA	70	NC2LGW
1,2-Dichlorobenzene	NA	20	NC2LGW
1,4-Dichlorobenzene	NA	6	NC2LGW
Benzene	NA	1	NC2LGW
Methyl-tert-Butyl Ether (MTBE)	NA	20	NC2LGW
Tetrachloroethene	NA	0.7	NC2LGW
Vinyl chloride	--	0.03	NC2LGW

TR-5TH-GW12-25-29-0216	
2/4/16	
Sample Depth: 25 - 29 ft bgs	
1,2,4-Trichlorobenzene	11.6 D
1,2-Dichlorobenzene	**34.2 D**
1,4-Dichlorobenzene	**11.3 D**
Benzene	0.357 DJ
Methyl-tert-Butyl Ether (MTBE)	19.4 D

TR-5TH-MW02-0216		
Screen Interval: 7 - 27 ft bgs		
	6/20/13	2/11/16
1,2,4-Trichlorobenzene	**1,300 D**	12.6* D
1,2-Dichlorobenzene	**210 D**	9.35* D
1,4-Dichlorobenzene	**260 D**	4.06* D
Benzene	**1.8 J**	1 U
Methyl-tert-Butyl Ether (MTBE)	**270 D**	3.77* D
Vinyl chloride	1 U	**1.3* DJ**

TR-5TH-GW17-25-29-0216	
2/3/16	
Sample Depth: 25 - 29 ft bgs	
1,2,4-Trichlorobenzene	8.75 D
1,2-Dichlorobenzene	8.24 D
1,4-Dichlorobenzene	**6.28 D**
Benzene	0.498 DJ
Methyl-tert-Butyl Ether (MTBE)	**32.1 D**

TR-5TH-MW05-0216	
2/11/16	
Screen Interval: 17 - 27 ft bgs	
1,2,4-Trichlorobenzene	**588 DB**
1,2-Dichlorobenzene	**182 D**
1,4-Dichlorobenzene	**173 D**
Benzene	**2.09 D**
Methyl-tert-Butyl Ether (MTBE)	**345 D**

TR-5TH-GW01-10-14-0116	
1/12/16	
Sample Depth: 10 - 14 ft bgs	
Methyl-tert-Butyl Ether (MTBE)	0.709 DJ

TR-5TH-GW01-25-29-0116	
1/12/16	
Sample Depth: 25 - 29 ft bgs	
1,2,4-Trichlorobenzene	1.24 DJ
1,2-Dichlorobenzene	0.665 DJ
1,4-Dichlorobenzene	0.898 DJ
Methyl-tert-Butyl Ether (MTBE)	2.78 D

TR-5TH-MW04-0216	
2/16/16	
Screen Interval: 17 - 27 ft bgs	
1,2,4-Trichlorobenzene	2.7 D
1,2-Dichlorobenzene	1.28 DJ
1,4-Dichlorobenzene	2.17 D
Methyl-tert-Butyl Ether (MTBE)	1.41 DJ

5th-2	
1/10/12	
Sample Depth: 8 - 12 ft bgs	
1,2,4-Trichlorobenzene	0.16 J
1,2-Dichlorobenzene	0.7 J
Benzene	0.25
Methyl-tert-Butyl Ether (MTBE)	9.96
Vinyl Chloride	**13.6**

TR-5TH-GW13-05-09-0116	
1/14/16	
Sample Depth: 5 - 9 ft bgs	
1,2,4-Trichlorobenzene	0.713 XDJ
1,2-Dichlorobenzene	3.49 XD
Methyl-tert-Butyl Ether (MTBE)	2.8 XD
TR-5TH-GW13-25-29-0116	
1/14/16	
Sample Depth: 25 - 29 ft bgs	
1,2,4-Trichlorobenzene	**669 XD**
1,2-Dichlorobenzene	**204 XD**
1,4-Dichlorobenzene	**168 D**
Benzene	**2.28 DJ**
Methyl-tert-Butyl Ether (MTBE)	**552 XD**

TR-5TH-MW03-0216	
2/9/16	
Screen Interval: 17 - 27 ft bgs	
1,2,4-Trichlorobenzene	0.625 DJ
Methyl-tert-Butyl Ether (MTBE)	1.11 DJ
Tetrachloroethene	**1.92 DB**

TR-5TH-GW14-25-29-0216	
2/4/16	
Sample Depth: 25 - 29 ft bgs	
Methyl-tert-Butyl Ether (MTBE)	8.3 D

TR-5TH-GW05-06-10-0116	
1/12/16	
Sample Depth: 6 - 10 ft bgs	
1,2,4-Trichlorobenzene	15.9 D
1,2-Dichlorobenzene	19.1 D
1,4-Dichlorobenzene	3.46 D
Methyl-tert-Butyl Ether (MTBE)	5.75 D

TR-5TH-GW08-10-14-0116	
1/13/16	
Sample Depth: 10 - 14 ft bgs	
No detections	
TR-5TH-GW08-25-29-0116	
1/13/16	
Sample Depth: 25 - 29 ft bgs	
Methyl-tert-Butyl Ether (MTBE)	6.46*

TR-5TH-SB04-GW-0613	
6/17/13	
Sample Depth: 10 - 14 ft bgs	
1,2-Dichlorobenzene	3.6
Methyl-tert-Butyl Ether (MTBE)	10

TR-5TH-GW07-10-14-0116	
1/12/16	
Sample Depth: 10 - 14 ft bgs	
1,2-Dichlorobenzene	1.03 DJ
Methyl-tert-Butyl Ether (MTBE)	1.67 DJ
Vinyl chloride	**1.41 DJ**

5th-3	
1/10/12	
Sample Depth: 8 - 12 ft bgs	
Methyl-tert-Butyl Ether (MTBE)	0.59 J

TR-5TH-MW06-0216	
2/11/16	
Screen Interval: 17 - 27 ft bgs	
1,2,4-Trichlorobenzene	6.33 D
1,2-Dichlorobenzene	5.16 D
1,4-Dichlorobenzene	1.37 DJ
Methyl-tert-Butyl Ether (MTBE)	**86.1 D**

5th-4	
1/10/12	
Sample Depth: 8 - 12 ft bgs	
Methyl-tert-Butyl Ether (MTBE)	2.01

Notes
Bold text indicates exceedance of the NC2LGW criteria.
B - Analyte also detected in an associated laboratory blank
D - Compound identified in an analysis at a secondary dilution factor.
J - Analyte present. Value may or may not be accurate or precise
U - The material was analyzed for, but not detected.
X - The parameter shows a potential positive bias on a reported concentration due to an ICV or CCV exceedance.
NA - Not Available
Monitoring well samples were collected at the midpoint of the screen interval.
Concentrations shown in micrograms per liter (UG/L)
* The highest concentration of the parent sample and duplicate sample

Legend
- Abandoned Monitoring Well Location
- Monitoring Well Location
- Shallow Grab Groundwater Sample
- Shallow/Deep Grab Groundwater Sample
- RA Excavation Extent
- Groundwater Flow Direction

Extent of Contamination
- Aromatic Chlorobenzenes
- Chlorinated Aliphatic VOCs
- Fuel Compounds

N W E S

0 50 100 Feet

Figure 18
5th Street Disposal Area Groundwater COC Results – VOCs
TRDA Remedial Investigation Report
Harvey Point Defense Testing Activity
Hertford, North Carolina

ch2m

V:\NACFACENGCOMLANT\439611SecuredAccess\GIS\MapFiles\439611_TRDA_RI\Figure 19 - 5th Street Disposal Area GW COC Results - Total Metals.mxd4/4/2016bmailhes

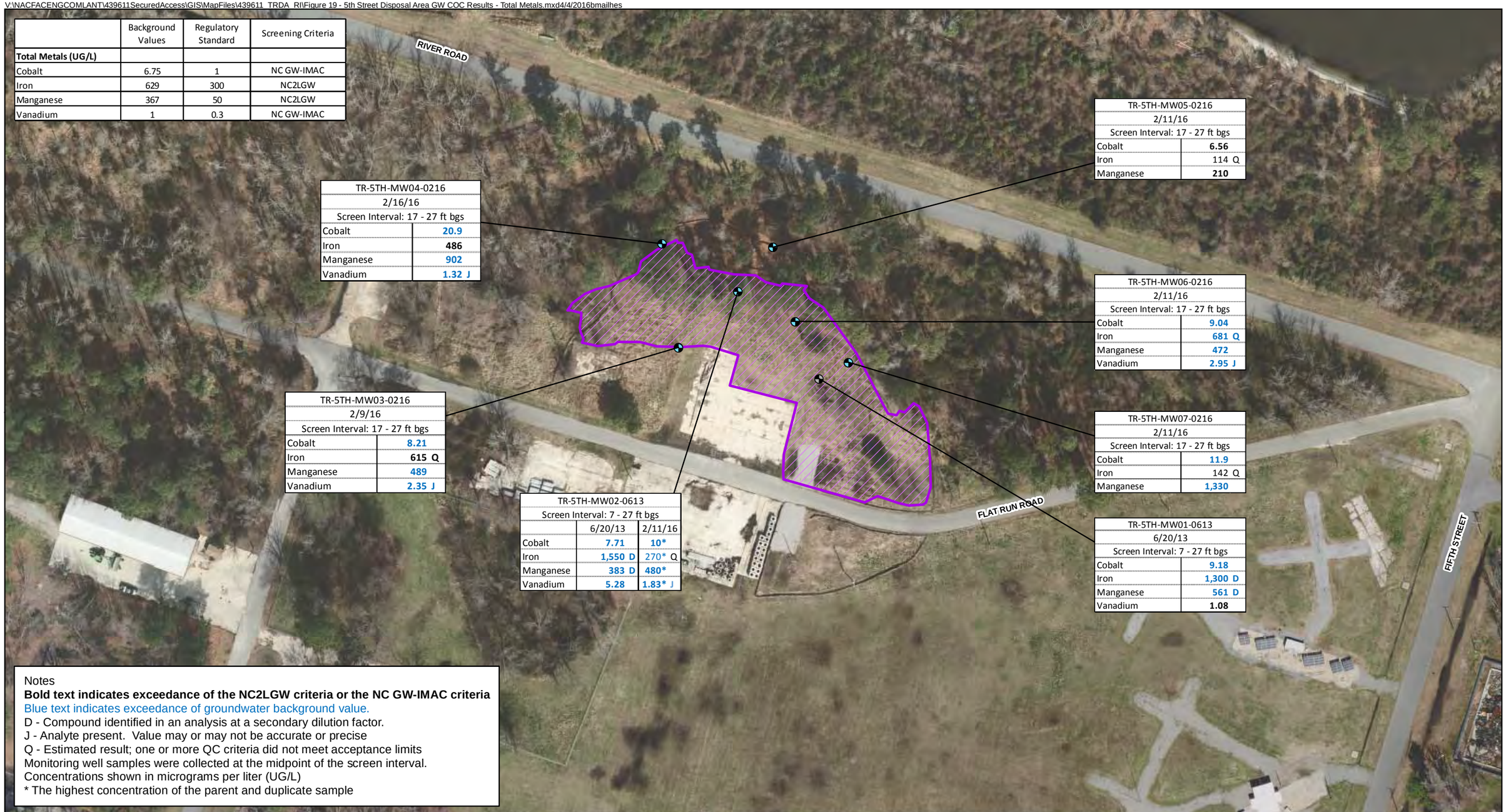

	Background Values	Regulatory Standard	Screening Criteria
Total Metals (UG/L)			
Cobalt	6.75	1	NC GW-IMAC
Iron	629	300	NC2LGW
Manganese	367	50	NC2LGW
Vanadium	1	0.3	NC GW-IMAC

Notes
Bold text indicates exceedance of the NC2LGW criteria or the NC GW-IMAC criteria
Blue text indicates exceedance of groundwater background value.
D - Compound identified in an analysis at a secondary dilution factor.
J - Analyte present. Value may or may not be accurate or precise
Q - Estimated result; one or more QC criteria did not meet acceptance limits
Monitoring well samples were collected at the midpoint of the screen interval.
Concentrations shown in micrograms per liter (UG/L)
* The highest concentration of the parent and duplicate sample

Legend
- Abandoned Monitoring Well Location
- Monitoring Well Location
- RA Excavation Extent

N W E S

0 50 100 Feet

Figure 19
5th Street Disposal Area Groundwater COC Results - Metals
TRDA Remedial Investigation Report
Harvey Point Defense Testing Activity
Hertford, North Carolina

ch2m

V:\NACFACENGCOMLANT\439611SecuredAccess\GIS\MapFiles\439611_TRDA_RI\Figure 20 - 2nd Street GW Contamination Extent.mxd4/4/2016bmailhes

Notes:
The current extent of groundwater contamination is based on locations with VOC concentrations in exceedance of regulatory standards and 100-foot buffer. Metals exceedances are included within the extent.
Yellow highlighting indicates a COC exceedance

Legend

- Abandoned Monitoring Well Location
- Monitoring Well Location
- Shallow Grab Groundwater Sample
- Shallow/Deep Grab Groundwater Sample
- VOC Exceedances Plume
- VOC Exeedances Plume 100-ft Buffer

N
W E
S

0 40 80
Feet

Figure 20
2nd Street Disposal Area Current Extent of Groundwater Contamination
TRDA Remedial Investigation Report
Harvey Point Defense Testing Activity
Hertford, North Carolina

ch2m

V:\NACFACENGCOMLANT\439611SecuredAccess\GIS\MapFiles\439611_TRDA_RI\Figure 21 - 5th Street GW Contamination.mxd4/4/2016bmailhes

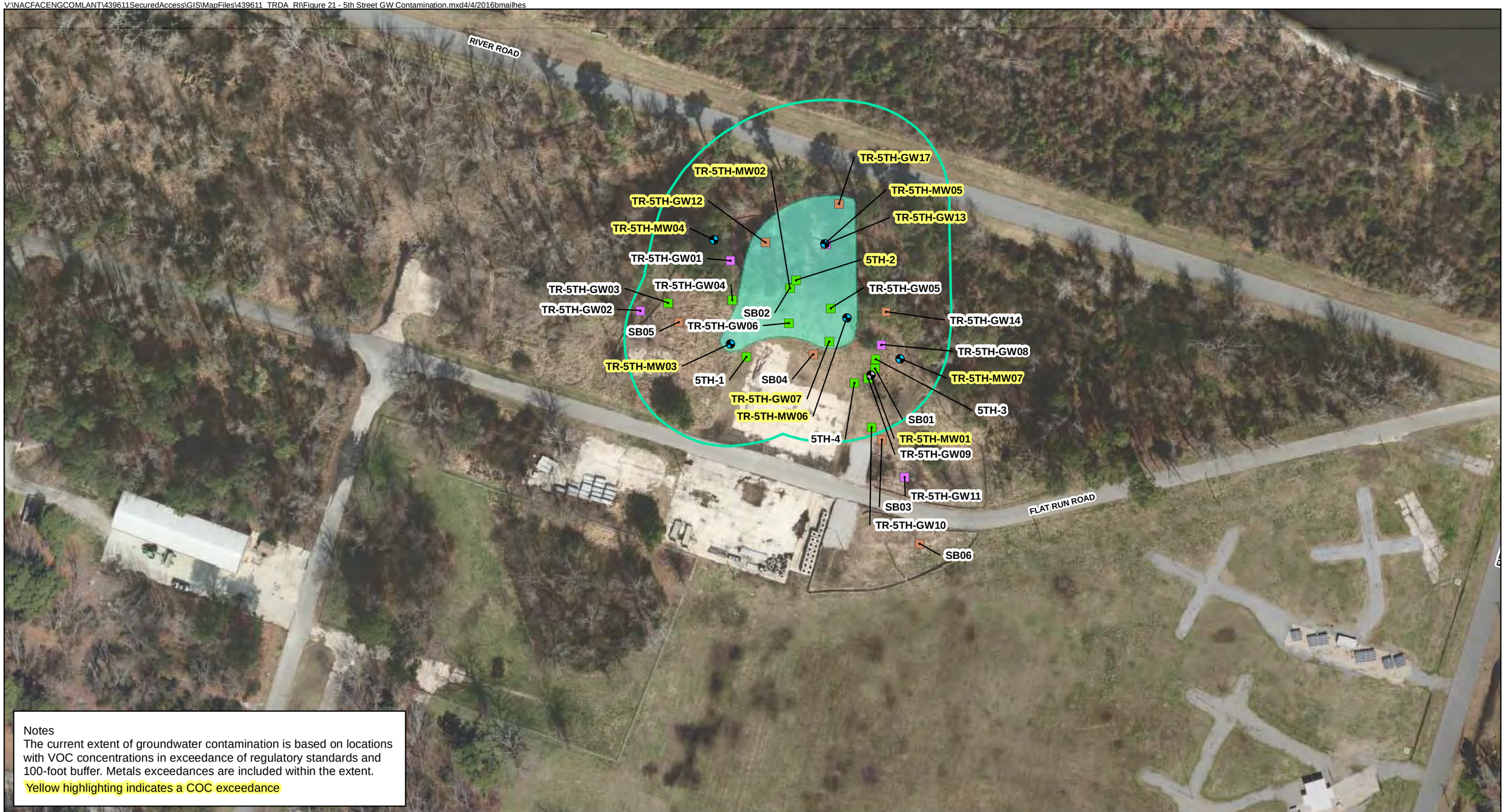

Notes
The current extent of groundwater contamination is based on locations with VOC concentrations in exceedance of regulatory standards and 100-foot buffer. Metals exceedances are included within the extent.
Yellow highlighting indicates a COC exceedance

Legend

- Abandoned Monitoring Well Location
- Monitoring Well Location
- Shallow Grab Groundwater Sample
- Shallow/Deep Grab Groundwater Sample
- Deep Grab Groundwater Sample
- VOC Exceedances Plume
- VOC Exeedances Plume 100-ft Buffer

N
W E
S

0 50 100
Feet

Figure 21
5th Street Disposal Area Current Extent of Groundwater Contamination
TRDA Remedial Investigation Report
Harvey Point Defense Testing Activity
Hertford, North Carolina

ch2m

Attachment A
Soil Boring Logs and Well Completion Diagrams

Soil Boring Logs

CH2MHILL	PROJECT NUMBER 439611.01.RI	BORING NUMBER HPDTA-BG-MW01	SHEET 1 OF 2

SOIL BORING LOG

PROJECT :	Towers Road Disposal Area Phase I RI	DRILLING CONTRACTOR AND DRILLER :	Parratt Wolff/J. Ellingworth, J. Terry
LOCATION/SITE :	HPDTA Hertford, NC/Background	DRILLING METHOD AND EQUIPMENT USED :	IRA300, HAS 4.25" ID, 4' Macrocore Sampler
DATE :	6/11/2013 & 6/12/2013	WATER LEVEL :	5.8' bgs
START TIME :	1620	GROUND SURFACE CONDITIONS :	Grass Cover (South of concrete slab)
END TIME :	0935	LOGGER :	T. Stewart/VBO

DEPTH (FT)	SAMPLE INTERVAL (FT)	SAMPLE RECORVERY (FT)	SAMPLE COLLECTION TIME	SOIL DESCRIPTION SOIL NAME, USCS GROUP SYMBOL, COLOR, MOISTURE CONTENT, RELATIVE DENSITY, OR CONSISTENCY, SOIL STRUCTURE, MINERALOGY	COMMENTS DEPTH OF CASING, DRILLING RATE, DRILLING FLUID LOSS, TESTS, AND INSTRUMENTATION. PID (ppm)
	0-4	4.0/4.0	NOT SAMPLED (NS)	0.0-1.8: Silty SAND (SM) dark gray to dark greenish brown (10YR 4/1-2), moist, loose, fine to medium grain, abundant organics, trace gravel (road base) at 8" bgs, fill sand lense from 1.6 to 1.8' (pale brown, SP) 1.8-4.0: CLAY (CL) yellowish brown (10YR 5/4), dry, stiff to very stiff, medium to high plasticity, trace silt and very fine grain sand, trace brownish yellow mottling	2.4 2.0
5	4-8	4.0/4.0	NS	4.0-8.0: SILT (ML)/silty sand (SM) dark greenish gray and greenish gray (Gley 1 5/10Y and Gley 2 6/10G), wet at 5.8' bgs, medium dense, low plastic fines, high silt content, very fine grain sands, high mica content, black organics very fine grain particles at 5.5-6.3' bgs, strong	3.1 4.4
10	8-12	4.0/4.0	NS	8.0-11.4: SILT (ML)/silty sand (SM) dark greenish gray and greenish gray (Gley 1 5/10Y and Gley 2 6/10G), wet, medium dense, low plastic fines, high silt content, very fine grain sands, high mica content, strong brown mottling 11.4-12.0: Silty SAND (SM) pale brown (2.5Y 7/3), wet, loose, nonplastic, medium to coarse sands	3.4 2.7
15	12-16	4.0/4.0	NS	12.0-12.7: Clayey SAND (SC) pale brown (2.5Y 7/3) w/strong brown banding, wet, medium to high plasticity, medium to coarse sands 12.7-16.0: Silty SAND (SM) pale brown to light gray (2.5Y 7/2-3), wet, loose, nonplastic, medium to coarse sands	4.5 4.5
20	16-20	4.0/4.0	NS	16.0-20.0: Silty SAND (SM) pale brown to light gray (2.5Y 7/2-3), wet, loose, nonplastic, medium to coarse sands	3.1 3.3
	20-24	4.0/4.0	NS	20.0-24.0: Silty SAND (SM) pale brown to light gray (2.5Y 7/2-3), wet, loose, nonplastic, medium to coarse sands, yellowish brown discoloration from 20-23' bgs w/intense reddish brown organic staining	2.8 2.5
25	24-28	4.0/4.0	NS	24.0-28.0: Silty SAND (SM) light gray (2.5Y 7/2), wet, loose, nonplastic, medium to coarse sands	1.6 1.8
30	28-32	4.0/4.0	NS	28.0-32.0: Silty to poorly graded SAND (SM-SP) pale brown (2.5Y 7/4), wet, very loose to loose, nonplastic fines, low silt content, medium to coarse sand	1.2

CH2MHILL	PROJECT NUMBER 439611.01.RI	BORING NUMBER HPDTA-BG-MW01	SHEET 2 OF 2

SOIL BORING LOG

PROJECT :	Towers Road Disposal Area Phase I RI	DRILLING CONTRACTOR AND DRILLER :	Parratt Wolff/J. Ellingworth, J. Terry
LOCATION/SITE :	HPDTA Hertford, NC/Background	DRILLING METHOD AND EQUIPMENT USED :	IRA300, HAS 4.25" ID, 4' Macrocore Sampler
DATE :	6/11/2013 & 6/12/2013	WATER LEVEL :	5.8' bgs
START TIME :	1620	GROUND SURFACE CONDITIONS :	Grass Cover (South of concrete slab)
END TIME :	0935	LOGGER :	T. Stewart/VBO

DEPTH (FT)	SAMPLE INTERVAL (FT)	SAMPLE RECORVERY (FT)	SAMPLE COLLECTION TIME	SOIL DESCRIPTION SOIL NAME, USCS GROUP SYMBOL, COLOR, MOISTURE CONTENT, RELATIVE DENSITY, OR CONSISTENCY, SOIL STRUCTURE, MINERALOGY	COMMENTS DEPTH OF CASING, DRILLING RATE, DRILLING FLUID LOSS, TESTS, AND INSTRUMENTATION. PID (ppm)
	28-32	4.0/4.0	NS		1.4
	32-36	4.0/4.0	NS	32.0-36.0: Silty to poorly graded SAND (SM-SP) pale brown (2.5Y 7/4) from 32-34.3' bgs and light gray (2.5Y 7/2) from 34.3-36' bgs, wet, very loose to loose, nonplastic fines, low silt content, very coarse sands w/granules and pebbles (up to 9mm) from 32.5-34.3' bgs, coarse sand from 34.3-36' bgs, clay seams (<1/4") at 35.4' and 35.7' light gray low	1.5
35					1.2
				End Boring at 36' bgs	
40					
45					
50					
55					

CH2MHILL	PROJECT NUMBER 439611.01.RI	BORING NUMBER HPDTA-BG-MW02	SHEET 1 OF 2

SOIL BORING LOG

PROJECT :	Towers Road Disposal Area Phase I RI	DRILLING CONTRACTOR AND DRILLER :	Parratt Wolff/J. Ellingworth, J. Terry
LOCATION/SITE :	HPDTA Hertford, NC/Background	DRILLING METHOD AND EQUIPMENT USED :	IRA300, HAS 4.25" ID, 4' Macrocore Sampler
DATE :	6/13/2013	WATER LEVEL :	4.8' bgs
START TIME :	0840	GROUND SURFACE CONDITIONS :	Grass Cover (Adjacent to River Road)
END TIME :	0935	LOGGER :	T. Stewart/VBO

DEPTH (FT)	SAMPLE INTERVAL (FT)	SAMPLE RECORVERY (FT)	SAMPLE COLLECTION TIME	SOIL DESCRIPTION SOIL NAME, USCS GROUP SYMBOL, COLOR, MOISTURE CONTENT, RELATIVE DENSITY, OR CONSISTENCY, SOIL STRUCTURE, MINERALOGY	COMMENTS DEPTH OF CASING, DRILLING RATE, DRILLING FLUID LOSS, TESTS, AND INSTRUMENTATION. PID (ppm)
	0-4	4.0/4.0	NOT SAMPLED (NS)	0.0-0.3: CLAY w/sand (CL) very dark gray (10YR 3/1), moist, stiff, low plasticity, very fine grain to fine grain sands, roots 0.3-1.8: Silty SAND (SM) yellowish brown (10YR 5/8), moist, dense, medium to coarse sands, non to low plastic fines 1.8-2.1: Silty SAND/poorly sorted SAND (SM-SP), gray to light gray (2.5Y 6-7/1), moist, low silt content, nonplastic, medium dense, laminated pale yellow and very dark gray (<1/8")	7.6 6.6
5	4-8	4.0/4.0	NS	2.1-8.0: SILT w/sand / silty SAND (SM) bluish gray (Gley 2 5-6/1) grading to light greenish gray (Gley 1 7/1), moist to wet (wet at 4.8' bgs), tight pore spaces, mottled yellowish brown, non to low plastic fines, very fine grain sands	5.6 5.3
10	8-12	4.0/4.0	NS	8.0-12.0: SILT w/sand / silty sand (SM) bluish gray (Gley 2 5-6/1) grading to light greenish gray (Gley 1 7/1), wet, tight pore spaces, mottled yellowish brown, non to low plastic fines, very fine grain sands	7.4 5.8
15	12-16	4.0/4.0	NS	12.0-16.0: Silty SAND (SM) light olive gray (5Y 6/2) from 12-15' bgs and pale brown (2.5Y 7/4) from 15-16' bgs, wet, discolored strong brown concentrations from 15-15.3' bgs, medium grain	10.8 5.3
20	16-20	4.0/4.0	NS	16.0-20.0: Silty SAND (SM) pale brown (2.5Y 7/4), wet, strong brown mottling, medium to coarse grain	6.5 7.9
	20-24	4.0/4.0	NS	20.0-21.0: Silty SAND (SM) pale brown (2.5Y 7/4), wet, strong brown mottling, medium to coarse grain 21.0-21.5: CLAY (CL) grayish brown (2.5Y 5/2), moist, trace strong brown mottling, stiff, nonplastic, some coarse sand seams, reddish brown concentrations 22.5-24: Silty SAND (SM) pale yellow (2.5Y 8/2), wet, coarse to medium grain, very loose to loose	12.9 10.1
25	24-28	4.0/4.0	NS	24.0-28.0: Sitly SAND (SM) yellow (10YR 7/6), wet, coarse to medium grain, very loose to loose, clay stringers, very coarse to coarse sand seams w/weakly concentrated reddish brown sands	10.8 7.0
30	28-32	4.0/4.0	NS	28.0-32.0: Sitly SAND (SM) yellow (10YR 7/6), wet, coarse to medium grain, very loose to loose, micro black and reddish brown laminations	5.6

CH2MHILL	PROJECT NUMBER 439611.01.RI	BORING NUMBER HPDTA-BG-MW02	SHEET 2 OF 2

SOIL BORING LOG

PROJECT :	Towers Road Disposal Area Phase I RI	DRILLING CONTRACTOR AND DRILLER :	Parratt Wolff/J. Ellingworth, J. Terry
LOCATION/SITE :	HPDTA Hertford, NC/Background	DRILLING METHOD AND EQUIPMENT USED :	IRA300, HAS 4.25" ID, 4' Macrocore Sampler
DATE :	6/13/2013	WATER LEVEL :	4.8' bgs
START TIME :	0840	GROUND SURFACE CONDITIONS :	Grass Cover (Adjacent to River Road)
END TIME :	0935	LOGGER :	T. Stewart/VBO

DEPTH (FT)	SAMPLE INTERVAL (FT)	SAMPLE RECORVERY (FT)	SAMPLE COLLECTION TIME	SOIL DESCRIPTION SOIL NAME, USCS GROUP SYMBOL, COLOR, MOISTURE CONTENT, RELATIVE DENSITY, OR CONSISTENCY, SOIL STRUCTURE, MINERALOGY	COMMENTS DEPTH OF CASING, DRILLING RATE, DRILLING FLUID LOSS, TESTS, AND INSTRUMENTATION. PID (ppm)
	28-32	4.0/4.0	NS		4.5
				End Boring at 32' bgs	
35					
40					
45					
50					
55					

CH2MHILL	PROJECT NUMBER 439611.01.RI	BORING NUMBER HPDTA-BG-MW03	SHEET 1 OF 2

SOIL BORING LOG

PROJECT :	Towers Road Disposal Area Phase I RI	DRILLING CONTRACTOR AND DRILLER :	Parratt Wolff/J. Ellingworth, J. Terry
LOCATION/SITE :	HPDTA Hertford, NC/Background	DRILLING METHOD AND EQUIPMENT USED :	IRA300, HAS 4.25" ID, 4' Macrocore Sampler
DATE :	6/19/2013	WATER LEVEL :	6.1' bgs
START TIME :	0915	GROUND SURFACE CONDITIONS :	Grass Cover
END TIME :	0950	LOGGER :	T. Stewart/VBO

DEPTH (FT)	SAMPLE INTERVAL (FT)	SAMPLE RECORVERY (FT)	SAMPLE COLLECTION TIME	SOIL DESCRIPTION SOIL NAME, USCS GROUP SYMBOL, COLOR, MOISTURE CONTENT, RELATIVE DENSITY, OR CONSISTENCY, SOIL STRUCTURE, MINERALOGY	COMMENTS DEPTH OF CASING, DRILLING RATE, DRILLING FLUID LOSS, TESTS, AND INSTRUMENTATION. PID (ppm)
	0-4	4.0/4.0	NOT SAMPLED (NS)	0.0-0.2: Topsoil 0.2-2.1: Silty SAND (SM) light gray (7.5YR 7/1), dry, medium dense to dense, fine grain, roots, strong brown discoloration as blotches, low 2.1-3.7: CLAY w/silt (CL) pale brown (10YR 6/3), moist to dry, stiff, medium to high plasticity, very little to no sand 3.7-4.0: SILT (ML) pale brown, moist, loose to medium dense, non plastic, slightly cohesive, strong brown mottling	0.3 0.3
5	4-8	4.0/4.0	NS	4.0-5.0: SILT (ML) pale brown, moist, loose to medium dense, non plastic, slightly cohesive, strong brown mottling 5.0-8.0: Silt/silty SAND (ML-SM) very pale brown and light yellowish brown mottled from 5-6.8' bgs (10YR 7/4 & 5/6) grading to light gray (2.5Y 7/2) from 6.8-12' bgs, wet at 6.1' bgs, non to low plastic fines, fine grain to very fine grain sand	1.3 0.2
10	8-12	4.0/4.0	NS	8.0-12.0: CLAY w/sand (CL-CH) light gray (2.5Y 7/2), moist to wet, stiff, mottled strong brown in pockets, root structures/borrows/bioturbation throughout	1.1 0.9
15	12-16	4.0/4.0	NS	12.0-12.3: Silty SAND (SM) yellowish red (5YR 4/6), wet, non plastic, loose to medium dense, coarse 12.3-16: Silty SAND (SM) light brownish yellow (10YR 6/4), wet, loose to very loose, coarse sands	0.6 0.6
20	16-20	4.0/4.0	NS	16.0-20.0: Silty SAND (SM) light gray (2.5Y 7/2), wet, loose to very loose, coarse sands, brownish black organic discoloration	1.0 0.7
	20-24	4.0/4.0	NS	20.0-24.0: Silty SAND (SM) light gray (2.5Y 7/2), wet, loose to very loose, coarse sands, brownish black organic discoloration, very coarse fraction from 22-23' bgs	0.8 0.2
25	24-28	4.0/4.0	NS	24.0-28.0: Silty SAND (SM) light gray to very pale brown (10YR 7/2-3) from 24-27' bgs and brownish yellow (10YR 6/6) from 27-28' bgs, wet, loose to very loose, non plastic fines, coarse to medium sands	0.2 0.2
30				End Boring at 28' bgs	

CH2MHILL	PROJECT NUMBER 439611.01.RI	BORING NUMBER HPDTA-BG-MW03	SHEET 2 OF 2

SOIL BORING LOG

PROJECT :	Towers Road Disposal Area Phase I RI	DRILLING CONTRACTOR AND DRILLER :	Parratt Wolff/J. Ellingworth, J. Terry
LOCATION/SITE :	HPDTA Hertford, NC/Background	DRILLING METHOD AND EQUIPMENT USED :	IRA300, HAS 4.25" ID, 4' Macrocore Sampler
DATE :	6/19/2013	WATER LEVEL :	6.1' bgs
START TIME :	0915	GROUND SURFACE CONDITIONS :	Grass Cover
END TIME :	0950	LOGGER :	T. Stewart/VBO

DEPTH (FT)	SAMPLE INTERVAL (FT)	SAMPLE RECORVERY (FT)	SAMPLE COLLECTION TIME	SOIL DESCRIPTION SOIL NAME, USCS GROUP SYMBOL, COLOR, MOISTURE CONTENT, RELATIVE DENSITY, OR CONSISTENCY, SOIL STRUCTURE, MINERALOGY	COMMENTS DEPTH OF CASING, DRILLING RATE, DRILLING FLUID LOSS, TESTS, AND INSTRUMENTATION. PID (ppm)
35					
40					
45					
50					
55					

CH2MHILL	PROJECT NUMBER 439611.01.RI	BORING NUMBER HPDTA-BG-MW04	SHEET 1 OF 2

SOIL BORING LOG

PROJECT :	Towers Road Disposal Area Phase I RI	DRILLING CONTRACTOR AND DRILLER :	Parratt Wolff/J. Ellingworth, J. Terry
LOCATION/SITE :	HPDTA Hertford, NC/Background	DRILLING METHOD AND EQUIPMENT USED :	IRA300, HAS 4.25" ID, 4' Macrocore Sampler
DATE :	6/19/2013	WATER LEVEL :	5.3' bgs
START TIME :	0800	GROUND SURFACE CONDITIONS :	Grass Cover
END TIME :	0840	LOGGER :	T. Stewart/VBO

DEPTH (FT)	SAMPLE INTERVAL (FT)	SAMPLE RECORVERY (FT)	SAMPLE COLLECTION TIME	SOIL DESCRIPTION SOIL NAME, USCS GROUP SYMBOL, COLOR, MOISTURE CONTENT, RELATIVE DENSITY, OR CONSISTENCY, SOIL STRUCTURE, MINERALOGY	COMMENTS DEPTH OF CASING, DRILLING RATE, DRILLING FLUID LOSS, TESTS, AND INSTRUMENTATION. PID (ppm)
	0-4	4.0/4.0	NOT SAMPLED (NS)	0.0-0.3: Topsoil 0.3-2.3: Silty SAND w/ clay (SM) light gray (7.5YR 7/1) w/ brownish yellow mottling, dry, dense, non to low plastic fines, trace roots, high silt content, very fine to fine grain sands 2.3-4.0: SILT (ML)-silty SAND (SM) light gray to pale brown (10YR 6/3), moist, non to low plasticity fines, high silt content, very fine to fine	1.7 3.3
5	4-8	4.0/4.0	NS	4.0-5.3: SILT (ML)-silty SAND (SM) light gray (7.5YR 7/1) to pale brown (10YR 6/3), moist, non to low plasticity fines, high silt content, very fine to fine grain sands 5.3-8.0: Silty SAND (SM) pale brown (10YR 6/3) w/light gray mottling, low plasticity, wet at 5.3' bgs, very fine to fine grain sands, tight pore	0.2 0.2
10	8-12	4.0/4.0	NS	8.0-8.8: Silty SAND (SM) pale brown (10YR 6/3) w/light gray mottling, low plasticity, wet at 5.3' bgs, very fine to fine grain sands, tight pore 8.8-11.2: CLAY w/sand (CL) pale brown (10YR 6/3) w/light gray mottling, moist, abundant medium to coarse grain black organics, medium to high plasticity, fine to medium sands 11.2-12.0: Silty SAND (SM) light yellowish brown (2.5Y 6/3), wet, low plasticity fines, discolored strong brown from 11.5-11.7' bgs, coarse to medium sands	0.2 0.2
15	12-16	4.0/4.0	NS	12.0-16.0: Silty SAND (SM) light yellowish brown (2.5Y 6/3), wet, low plasticity fines, coarse to medium sands	0.6 0.5
20	16-20	4.0/4.0	NS	16.0-20.0: Silty SAND (SM) light yellowish brown (2.5Y 6/3) from 16-17' bgs and light gray (2.5Y 7/2) from 17-20' bgs w/strong brown mottling, coarse sands	0.7 0.3
	20-24	4.0/4.0	NS	20.0-24.0: Silty SAND (SM) light gray (2.5Y 7/2) w/strong brown mottling, coarse sands	1.2 0.6
25	24-28	4.0/4.0	NS	24.0-26.0: Silty SAND (SM) light gray (2.5Y 7/2) w/strong brown mottling, coarse sands 26.0-26.4: CLAY (CL) w/sand light brownish gray (10YR 6/2), moist to wet, medium to high plasticity, stiff, medium grain sands, laminated strong brown sections throughout 26.4-28.0: Silty SAND (SM)-well graded sand (SW) pale brown-yellow (2.5Y 5/4-6), wet, loose to very loose, discolored strong brown section	0.7 0.5
30				End Boring at 28' bgs	

CH2MHILL	PROJECT NUMBER	BORING NUMBER	SHEET 2 OF 2
	439611.01.RI	HPDTA-BG-MW04	

SOIL BORING LOG

PROJECT :	Towers Road Disposal Area Phase I RI	DRILLING CONTRACTOR AND DRILLER :	Parratt Wolff/J. Ellingworth, J. Terry
LOCATION/SITE :	HPDTA Hertford, NC/Background	DRILLING METHOD AND EQUIPMENT USED :	IRA300, HAS 4.25" ID, 4' Macrocore Sampler
DATE :	6/19/2013	WATER LEVEL :	5.3' bgs
START TIME :	0800	GROUND SURFACE CONDITIONS :	Grass Cover
END TIME :	0840	LOGGER :	T. Stewart/VBO

DEPTH (FT)	SAMPLE INTERVAL (FT)	SAMPLE RECORVERY (FT)	SAMPLE COLLECTION TIME	SOIL DESCRIPTION SOIL NAME, USCS GROUP SYMBOL, COLOR, MOISTURE CONTENT, RELATIVE DENSITY, OR CONSISTENCY, SOIL STRUCTURE, MINERALOGY	COMMENTS DEPTH OF CASING, DRILLING RATE, DRILLING FLUID LOSS, TESTS, AND INSTRUMENTATION. PID (ppm)
35					
40					
45					
50					
55					

CH2MHILL	PROJECT NUMBER 439611.01.RI	BORING NUMBER HPDTA-BG-SB05	SHEET 1 OF 1

SOIL BORING LOG

PROJECT :	Towers Road Disposal Area Phase I RI	DRILLING CONTRACTOR AND DRILLER :	Parratt Wolff/J. Ellingworth, J. Terry
LOCATION/SITE :	HPDTA Hertford, NC/Background	DRILLING METHOD AND EQUIPMENT USED :	IRA300, HAS 4.25" ID, 4' Macrocore Sampler
DATE :	6/18/2013	WATER LEVEL :	9' bgs
START TIME :	1400	GROUND SURFACE CONDITIONS :	Grass Cover
END TIME :	1430	LOGGER :	T. Stewart/VBO

DEPTH (FT)	SAMPLE INTERVAL (FT)	SAMPLE RECORVERY (FT)	SAMPLE COLLECTION TIME	SOIL DESCRIPTION SOIL NAME, USCS GROUP SYMBOL, COLOR, MOISTURE CONTENT, RELATIVE DENSITY, OR CONSISTENCY, SOIL STRUCTURE, MINERALOGY	COMMENTS DEPTH OF CASING, DRILLING RATE, DRILLING FLUID LOSS, TESTS, AND INSTRUMENTATION. PID (ppm)
	0-4	4.0/4.0	1410	0.0-0.2: Silty SAND (SM), brownish gray, dry, very loose, roots, non- 0.2-1.5: Silty sand (SM), light brownish gray-pale brown (10YR6/2), dry to moist, fine to medium grain, loose to medium dense, low to non-plastic fines, trace roots, trace coarse sand fraction 1.5-4.0: Well graded SAND to silty SAND (SW-SM), pale brown (2.5Y 8/2), dry, very loose, angular-sub angular, fine-medium grain, clear to translucent, very low silt percentage, non-plastic	0.7 2.7
5	4-8	4.0/4.0	1420	4.0-8.0: Well graded SAND to silty SAND (SW-SM), pale brown (2.5Y 8/2), dry, very loose, angular-sub angular, fine-medium grain, clear to translucent, very low silt percentage, non-plastic	2.1 2.7
10	8-12	4.0/4.0	NS	8.0-9.0: Well graded SAND to silty SAND (SW-SM), pale brown (2.5Y 8/2), dry, very loose, angular-sub angular, fine-medium grain, clear to translucent, very low silt percentage, non-plastic, grades to light 9.0-9.9: Silty sand-poorly graded sand (SM-SP), wet @ 9' bgs, pale brown (2.5Y 8/2), very loose-loose, very coarse-coarse grain 9.9-10.8: CLAY w/silt and sand (CL), light olive brown (2.5Y 5/3), wet, stiff, non-plastic, cohesive, trace light greenish gray mottling 10.8-12.0: Silty SAND (SM), very pale brown-yellow (10YR 7/4), wet, medium dense, non-plastic	2.3 1.8
15				End of Boring at 12' bgs	
20					
25					
30					

CH2MHILL	PROJECT NUMBER 439611.01.RI	BORING NUMBER TR-2ND-MW01	SHEET 1 OF 2

SOIL BORING LOG

PROJECT :	Towers Road Disposal Area Phase I RI	DRILLING CONTRACTOR AND DRILLER :	Parratt Wolff/J. Ellingworth, J. Terry
LOCATION/SITE :	HPDTA Hertford, NC/2nd Street Disposal Area	DRILLING METHOD AND EQUIPMENT USED :	IRA300, HAS 4.25" ID, 4' Macrocore Sampler
DATE :	6/10/2013	WATER LEVEL :	5.4' bgs
START TIME :	1340	GROUND SURFACE CONDITIONS :	Grass Cover
END TIME :	1545	LOGGER :	T. Stewart/VBO

DEPTH (FT)	SAMPLE INTERVAL (FT)	SAMPLE RECORVERY (FT)	SAMPLE COLLECTION TIME	SOIL DESCRIPTION SOIL NAME, USCS GROUP SYMBOL, COLOR, MOISTURE CONTENT, RELATIVE DENSITY, OR CONSISTENCY, SOIL STRUCTURE, MINERALOGY	COMMENTS DEPTH OF CASING, DRILLING RATE, DRILLING FLUID LOSS, TESTS, AND INSTRUMENTATION. PID (ppm)
	0-4	2.4/4.0	NOT SAMPLED (NS)	0.0 - 1.0: Silty SAND (SM) dark reddish brown (5YR 3/2), moist, loose, very fine sand, broken glass, ceramic debris 1.0 - 2.3: Silty SAND (SM) light yellowish brown (10YR 6/4), dry-moist, nonplastic, very fine sand, mottled 10% yellowish red (5YR 5/8), trace very fine gravel, debris 2.3 - 2.4: Silty SAND with glass gravel (SM-GM), black (5YR 2.5/1), moist, nonplastic, very fine grain 2.4 - 4.0: No Recovery (NR)	1.3 0.3
5	4-8	1.8/4.0	NS	4.0 - 4.4: Silty SAND (SM) black and light yellowish brown (2.5Y 6/4), moist, non-low plastic, debris, large (3") metal debris 4.4 - 5.8: CLAY w/sand silty sand (SM), dark greenish gray (Gley 1 5/5GY), wet @5.4', mottled light greenish gray (Gley 1 7/10Y), high silt content, fine grain sands 5.8 - 8.0: NR	0.7 2.3
10	8-12	3.0/4.0	NS	8.0 - 11.0: CLAY w/silt and sand (CL) mottled light gray, yellowish brown, and strong brown, moist, stiff, very fine grain sands, higher sand content from 10-11' bgs 11.0 - 12.0: NR	0.9 1.0
15	12-16	4.0/4.0	NS	12.0-16.0: Silty SAND (SM) pale brown-light yellowish brown (10YR 6/3-4), wet @ 12.8' bgs, medium to fine grain from 12-15.5' bgs, fine to medium grain from 15.5-16' bgs	1.4 2.0
20	16-20	4.0/4.0	NS	16.0-20.0: Silty SAND (SM) pale brown-light yellowish brown (10YR 6/3-4), wet, grades to pale brown (2.5Y 7/4) @ 17' bgs, fine to medium	0.9 0.5
	20-24	4.0/4.0	NS	20.0-23.0: Silty SAND (SM) pale brown (2.5Y 7/4), fine to medium 23.0-24.0: Silty sand (SM) discolored yellowish brown (10YR 5/8, wet, very loose to loose, medium to fine grain sands	0.9 0.8
25	24-28	4.0/4.0	NS	24.0-26.4: Silty SAND (SM) discolored yellowish brown (10YR 5/8), wet, very loose to loose, medium to fine grain sands 26.4-28.0: Silty SAND (SM) light yellowish brown (2.5Y 6/3), wet, loose, trace strong brown laminations, medium grain, non plastic	1.5 1.0
30	28-32	4.0/4.0	NS	28.0-29.4: Silty SAND (SM) light yellowish brown w/very dark greenish brow 29.4-29.7: CLAY (CL) brown (10YR 5/3), moist to dry, medium plasticity, stiff to very stiff, trace silt micas	0.8

CH2MHILL	PROJECT NUMBER 439611.01.RI	BORING NUMBER TR-2ND-MW01	SHEET 2 OF 2

SOIL BORING LOG

PROJECT :	Towers Road Disposal Area Phase I RI	DRILLING CONTRACTOR AND DRILLER :	Parratt Wolff/J. Ellingworth, J. Terry
LOCATION/SITE :	HPDTA Hertford, NC/2nd Street Disposal Area	DRILLING METHOD AND EQUIPMENT USED :	IRA300, HAS 4.25" ID, 4' Macrocore Sampler
DATE :	6/10/2013	WATER LEVEL :	5.4' bgs
START TIME :	1340	GROUND SURFACE CONDITIONS :	Grass Cover
END TIME :	1545	LOGGER :	T. Stewart/VBO

DEPTH (FT)	SAMPLE INTERVAL (FT)	SAMPLE RECORVERY (FT)	SAMPLE COLLECTION TIME	SOIL DESCRIPTION SOIL NAME, USCS GROUP SYMBOL, COLOR, MOISTURE CONTENT, RELATIVE DENSITY, OR CONSISTENCY, SOIL STRUCTURE, MINERALOGY	COMMENTS DEPTH OF CASING, DRILLING RATE, DRILLING FLUID LOSS, TESTS, AND INSTRUMENTATION. PID (ppm)
	28-32	4.0/4.0	NS	29.7-30.8: CLAY (CL) w/silt and sand greenish gray (Gley 1 5/10GY), moist to dry, stiff, medium plasticity, trace to very fine grain sand 30.8-32.0: Silty SAND (SM) discolored strong brown (7.5YR 5/6), moist to dry, stiff, medium plasticity, fine to coarse grain	1.1
	32-36	4.0/4.0	NS	31.0-33.0: Silty SAND (SM) yellow (2.5Y 8/6), moist to dry, stiff, medium plasticity, fine to coarse grain 33.0-36.0: Silty SAND (SM) yellow (2.5Y 8/6), non-plastic, black laminations, medium to coarse grain	0.6
35					0.5
	36-40	4.0/4.0	NS	36.0-40.0: Silty SAND (SM) yellow (2.5Y 8/6), non-plastic, black laminations, medium grain w/trace coarse sand component	0.4
					0.3
40					
				End Boring at 40' bgs	
45					
50					
55					

CH2MHILL	PROJECT NUMBER 439611.01.RI	BORING NUMBER TR-2ND-MW02	SHEET 1 OF 2

SOIL BORING LOG

PROJECT :	Towers Road Disposal Area Phase I RI	DRILLING CONTRACTOR AND DRILLER :	Parratt Wolff/J. Ellingworth, J. Terry
LOCATION/SITE :	HPDTA Hertford, NC/2nd Street Disposal Area	DRILLING METHOD AND EQUIPMENT USED :	IRA300, HAS 4.25" ID, 4' Macrocore Sampler
DATE :	6/11/2013	WATER LEVEL :	4.3' bgs
START TIME :	1120	GROUND SURFACE CONDITIONS :	Grass Cover (Adjacent to Construction Entrance)
END TIME :	1215	LOGGER :	T. Stewart/VBO

DEPTH (FT)	SAMPLE INTERVAL (FT)	SAMPLE RECORVERY (FT)	SAMPLE COLLECTION TIME	SOIL DESCRIPTION SOIL NAME, USCS GROUP SYMBOL, COLOR, MOISTURE CONTENT, RELATIVE DENSITY, OR CONSISTENCY, SOIL STRUCTURE, MINERALOGY	COMMENTS DEPTH OF CASING, DRILLING RATE, DRILLING FLUID LOSS, TESTS, AND INSTRUMENTATION. PID (ppm)
	0-4	2.0/4.0	NOT SAMPLED (NS)	0.0 - 1.6: Silty SAND w/gravel (SM) black (5YR 2.5/1), moist, medium dense, low plastic fines, fine to coarse debris (glass, brick, asphalt), very fine to fine grain sands 1.6-2.0: Silty SAND (SM) dark greenish gray (GLEY 1 5/5GY), moist, high silt content, very fine grain to fine grain sands, non-plastic, medium dense, coarse debris and gravel 2.0-4.0: No Recovery (NR)	1.0 NA
5	4-8	4.0/4.0	NS	4.0-6.9: Silty SAND (SM) dark greenish gray (Gley 1 5/5GY), wet at 4.3' bgs, loose to medium dense, nonplastic, fine grain to very fine grain, homogeneous 6.9-8.0: SILT (ML) light greenish gray (Gley 1 7/10Y), wet, nonplastic, stiff, trace very fine grain sand, blended and mottled strong brown	1.8 1.4
10	8-12	4.0/4.0	NS	8.0-10.8: SILT (ML) light greenish gray (Gley 1 7/10Y), wet, nonplastic, stiff, trace very fine grain sand, blended and mottled strong brown 10.8-12.0: CLAY with silt (CL) light greenish gray (Gley 1 7/10Y), moist, stiff, low plasticity, high silt content	1.2 0.5
15	12-16	4.0/4.0	NS	12-16: Silty SAND (SM) pale brown to light yellowish brown (10YR 6/3) with strong brown mottling, fine to medium grain, loose to very loose	1.6 1.5
20	16-20	4.0/4.0	NS	16-20: Silty SAND (SM) light gray (2.5Y 7/2) with abundant fine grain black particles, fine to medium grain, loose to very loose	1.0 0.8
25	20-24	4.0/4.0	NS	20-24: Silty SAND (SM) light gray (2.5Y 7/2) with coarse sand component discolored yellowish red, medium grain, loose to very loose	1.5 1.4
30	24-28	4.0/4.0	NS	24-28: Silty SAND (SM) light gray (2.5Y 7/2) with coarse sand component discolored yellowish red, medium grain, loose to very loose	1.6 1.2
	28-32	4.0/4.0	NS	28.0-30.0: CLAY with sand (CL/CH) greenish gray (Gley 1 5/10GY), moist, stiff to very stiff, medium plasticity, trace coarse light gray sand stringers, some silt micas	1.3

CH2MHILL	PROJECT NUMBER 439611.01.RI	BORING NUMBER TR-2ND-MW02	SHEET 2 OF 2

SOIL BORING LOG

PROJECT :	Towers Road Disposal Area Phase I RI	DRILLING CONTRACTOR AND DRILLER :	Parratt Wolff/J. Ellingworth, J. Terry
LOCATION/SITE :	HPDTA Hertford, NC/2nd Street Disposal Area	DRILLING METHOD AND EQUIPMENT USED :	IRA300, HAS 4.25" ID, 4' Macrocore Sampler
DATE :	6/11/2013	WATER LEVEL :	4.3' bgs
START TIME :	1120	GROUND SURFACE CONDITIONS :	Grass Cover
END TIME :	1215	LOGGER :	T. Stewart/VBO

DEPTH (FT)	SAMPLE INTERVAL (FT)	SAMPLE RECORVERY (FT)	SAMPLE COLLECTION TIME	SOIL DESCRIPTION SOIL NAME, USCS GROUP SYMBOL, COLOR, MOISTURE CONTENT, RELATIVE DENSITY, OR CONSISTENCY, SOIL STRUCTURE, MINERALOGY	COMMENTS DEPTH OF CASING, DRILLING RATE, DRILLING FLUID LOSS, TESTS, AND INSTRUMENTATION. PID (ppm)
	28-32	4.0/4.0	NS	30.0-32.0: Silty SAND (SM) very pale brown to yellow (10YR 7/4-6), wet, very loose, medium grain, strong brown mottling	0.8
				End Boring at 32' bgs	
35					
40					
45					
50					
55					

PROJECT NUMBER	BORING NUMBER	
439611.01.RI	TR-2ND-SB03	SHEET 1 OF 1

SOIL BORING LOG

PROJECT :	Towers Road Disposal Area Phase I RI	DRILLING CONTRACTOR AND DRILLER :	Parratt Wolff/J. Ellingworth, J. Terry
LOCATION/SITE :	HPDTA Hertford, NC/Background	DRILLING METHOD AND EQUIPMENT USED :	IRA300, HAS 4.25" ID, 4' Macrocore Sampler
DATE :	6/19/2013	WATER LEVEL :	6' bgs
START TIME :	1400	GROUND SURFACE CONDITIONS :	Grass Cover
END TIME :	1410	LOGGER :	T. Stewart/VBO

DEPTH (FT)	SAMPLE INTERVAL (FT)	SAMPLE RECORVERY (FT)	SAMPLE COLLECTION TIME	SOIL DESCRIPTION SOIL NAME, USCS GROUP SYMBOL, COLOR, MOISTURE CONTENT, RELATIVE DENSITY, OR CONSISTENCY, SOIL STRUCTURE, MINERALOGY	COMMENTS DEPTH OF CASING, DRILLING RATE, DRILLING FLUID LOSS, TESTS, AND INSTRUMENTATION. PID (ppm)
	0-4	4.0/4.0	1400	0.0-1.3:Silt-silty SAND (ML-SM), pale brown, moist, black silty, glass debris, trace roots 1.3-4.0: SILT/silty SAND (ML-SM), pale brown, moist	0.4 1.8
5	4-8	4.0/4.0	1410	4.0-8.0:SILT/silty SAND (ML-SM), pale brown, wet at 6' bgs	2.5 2.1
10				End of Boring at 8' bgs	
15					
20					
25					
30					

CH2MHILL	PROJECT NUMBER 439611.01.RI	BORING NUMBER TR-2ND-SB04	SHEET 1 OF 1

SOIL BORING LOG

PROJECT :	Towers Road Disposal Area Phase I RI	DRILLING CONTRACTOR AND DRILLER :	Parratt Wolff/J. Ellingworth, J. Terry
LOCATION/SITE :	HPDTA Hertford, NC/Background	DRILLING METHOD AND EQUIPMENT USED :	IRA300, HAS 4.25" ID, 4' Macrocore Sampler
DATE :	6/19/2013	WATER LEVEL :	5' bgs
START TIME :	1245	GROUND SURFACE CONDITIONS :	Grass Cover
END TIME :	1300	LOGGER :	T. Stewart/VBO

DEPTH (FT)	SAMPLE INTERVAL (FT)	SAMPLE RECORVERY (FT)	SAMPLE COLLECTION TIME	SOIL DESCRIPTION SOIL NAME, USCS GROUP SYMBOL, COLOR, MOISTURE CONTENT, RELATIVE DENSITY, OR CONSISTENCY, SOIL STRUCTURE, MINERALOGY	COMMENTS DEPTH OF CASING, DRILLING RATE, DRILLING FLUID LOSS, TESTS, AND INSTRUMENTATION. PID (ppm)
	0-4	4.0/4.0	1250	0.0-0.2:Mulch/grass 0.2-4.0: Silty SAND (SM), brownish black, reddish brown, moist, fine-medium grain sands, low plasticity	0.2 0.2
5	4-8	4.0/4.0	1300	4.0-8.0: Silty SAND (SM), brownish black, reddish brown, moist, fine-medium grain sands, low plasticity	0.6 0.6
10				End of Boring at 8' bgs	
15					
20					
25					
30					

CH2MHILL	PROJECT NUMBER	BORING NUMBER	SHEET 1 OF 1
	439611.01.RI	TR-2ND-SB05	

SOIL BORING LOG

PROJECT :	Towers Road Disposal Area Phase I RI	DRILLING CONTRACTOR AND DRILLER :	Parratt Wolff/J. Ellingworth, J. Terry
LOCATION/SITE :	HPDTA Hertford, NC/Background	DRILLING METHOD AND EQUIPMENT USED :	IRA300, HAS 4.25" ID, 4' Macrocore Sampler
DATE :	6/19/2013	WATER LEVEL :	5.1' bgs
START TIME :	1330	GROUND SURFACE CONDITIONS :	Grass Cover
END TIME :	1355	LOGGER :	T. Stewart/VBO

DEPTH (FT)	SAMPLE INTERVAL (FT)	SAMPLE RECORVERY (FT)	SAMPLE COLLECTION TIME	SOIL DESCRIPTION SOIL NAME, USCS GROUP SYMBOL, COLOR, MOISTURE CONTENT, RELATIVE DENSITY, OR CONSISTENCY, SOIL STRUCTURE, MINERALOGY	COMMENTS DEPTH OF CASING, DRILLING RATE, DRILLING FLUID LOSS, TESTS, AND INSTRUMENTATION. PID (ppm)
	0-4	4.0/4.0	1330	0.0-4.0: Silty SAND w/gravel (SM), black, moist, roots, loose-medium dense, medium sand, coarse to granular debris gravel including burnt	0.0 0.2
5	4-8	4.0/4.0	1340	4.0-5.0: SILT w/sand (ML), light olive brown, moist, soft/loose, very fine-fine grain black sand, black staining 5.0-8.0: CLAY w/silt and sand (CL), pale brown, wet at 5.1' bgs, very tight pore spaces, stiff, non-low plasticity, slightly cohesive, very fine	1.0 1.2
10				End of Boring at 8' bgs	
15					
20					
25					
30					

CH2MHILL	PROJECT NUMBER 439611.01.RI	BORING NUMBER TR-2ND-SB06	SHEET 1 OF 1

SOIL BORING LOG

PROJECT :	Towers Road Disposal Area Phase I RI	DRILLING CONTRACTOR AND DRILLER :	Parratt Wolff/J. Ellingworth, J. Terry
LOCATION/SITE :	HPDTA Hertford, NC/Background	DRILLING METHOD AND EQUIPMENT USED :	IRA300, HAS 4.25" ID, 4' Macrocore Sampler
DATE :	6/19/2013	WATER LEVEL :	7.2' bgs
START TIME :	1115	GROUND SURFACE CONDITIONS :	Grass Cover (Test Pit 60)
END TIME :	1135	LOGGER :	T. Stewart/VBO

DEPTH (FT)	SAMPLE INTERVAL (FT)	SAMPLE RECORVERY (FT)	SAMPLE COLLECTION TIME	SOIL DESCRIPTION SOIL NAME, USCS GROUP SYMBOL, COLOR, MOISTURE CONTENT, RELATIVE DENSITY, OR CONSISTENCY, SOIL STRUCTURE, MINERALOGY	COMMENTS DEPTH OF CASING, DRILLING RATE, DRILLING FLUID LOSS, TESTS, AND INSTRUMENTATION. PID (ppm)
	0-4	4.0/4.0	1120	0.0-0.9: Silty SAND w/gravel (SM), brownish black, dark greenish gray, and light gray, gravel is roadbase, trace coarse granules of glass 0.9-4.0: clay w/silts and sand (CL), brown and yellowish brown, dry-moist, stiff, high silt content, very fine-fine grain sands, mottled 30% strong brown throughout	0.5 0.0
5	4-8	4.0/4.0	1130	4.0-8.0: Silt-silty SAND (ML-SM), pale brown grading to greenish gray (Gley 1 6/10GY), wet at 7.2' bgs, very fine grain sands, tight pore spaces, non-low plastic fines	0.7 0.6
10				End of Boring at 8' bgs	
15					
20					
25					
30					

CH2MHILL	PROJECT NUMBER 439611.01.RI	BORING NUMBER TR-2ND-SB07	SHEET 1 OF 1

SOIL BORING LOG

PROJECT :	Towers Road Disposal Area Phase I RI	DRILLING CONTRACTOR AND DRILLER :	Parratt Wolff/J. Ellingworth, J. Terry
LOCATION/SITE :	HPDTA Hertford, NC/Background	DRILLING METHOD AND EQUIPMENT USED :	IRA300, HAS 4.25" ID, 4' Macrocore Sampler
DATE :	6/19/2013	WATER LEVEL :	6' bgs
START TIME :	0920	GROUND SURFACE CONDITIONS :	Grass Cover
END TIME :	0940	LOGGER :	T. Stewart/VBO

DEPTH (FT)	SAMPLE INTERVAL (FT)	SAMPLE RECORVERY (FT)	SAMPLE COLLECTION TIME	SOIL DESCRIPTION SOIL NAME, USCS GROUP SYMBOL, COLOR, MOISTURE CONTENT, RELATIVE DENSITY, OR CONSISTENCY, SOIL STRUCTURE, MINERALOGY	COMMENTS DEPTH OF CASING, DRILLING RATE, DRILLING FLUID LOSS, TESTS, AND INSTRUMENTATION. PID (ppm)
	0-4	4.0/4.0	0920	0.0-0.2: 0.2-3.0: Silty SAND (SM), light gray and light brownish yellow mottled, moist-dry, dense, very fine-fine grain sand, low plastic fines, 10% strong brown mottling 3.0-4.0: Silt-silty SAND (ML-SM), light greenish gray and pale brown (Gley 1 7/5GY & 2.5Y 7/3), wet at 6' bgs, very fine grain sands	0.2 0.2
5	4-8	4.0/4.0	0940	4.0-8.0: Silt-silty SAND (ML-SM), light greenish gray and pale brown (Gley 1 7/5GY & 2.5Y 7/3), wet at 6' bgs, very fine grain sands	0.5 0.5
10	8-12	4.0/4.0	NS	8.0-9.6: Silt-silty SAND (ML-SM), light greenish gray and pale brown (Gley 1 7/5GY & 2.5Y 7/3), wet at 6' bgs, very fine grain sands, high silt 9.6-12.0: Silty sand (SM), greenish gray (gley 1 5G 6/1), wet, medium dense, very fine-fine grain sands, low plastic fines, tight pore spaces, trace strong brown mottling throughout, trace black laminations	0.2 0.3
15				End of Boring at 12' bgs	
20					
25					
30					

PROJECT NUMBER:	BORING NUMBER: TR-2ND-GW01	SHEET 1 OF 2

SOIL BORING LOG

PROJECT : Tower Road Disposal Areas - Phase II Remedial Investigation

LOCATION : Harvey Point Defense Testing Activity (HPDTA), Hertford, NC

ELEVATION : 4.0 ft NAVD88 (natural ground elevation)

DRILLING CONTRACTOR : Parratt-Wolff Drilling, Inc.\P. Poyner

DRILLING METHOD AND EQUIPMENT : Geoprobe 7822DT, 4 ¼ ID 8 ¾ O.D. HSA, 5 ft Macro Core Sampler

WATER LEVELS : 11.0 ft bgs

START : 1/14/2016

END : 1/14/2016

LOGGER : T. Stewart\VBO

DEPTH BELOW EXISTING GRADE (ft)	INTERVAL (ft)	RECOVERY (in)	SAMPLE ID (TIME)	SOIL DESCRIPTION: SOIL NAME, USCS GROUP SYMBOL, COLOR, MOISTURE CONTENT, RELATIVE DENSITY OR CONSISTENCY, SOIL STRUCTURE, MINERALOGY	SYMBOLLIC LOG	COMMENTS	WELL DIAGRAM
4.0	0.0			**TOPSOIL/ROOTS** 0-0.4'			
		4.2	S-1	**CLAY WITH SILT (CL)** 0.4-4.2'- very pale brown and yellowish brown, (10YR 7/4 and 10YR 5/8), moist to wet, medium stiff, nonplastic, moist to wet at 3.0' bgs, medium stiff to soft at 2.4' - 4.2'			
				NO RECOVERY (NR) 4.2-5.0'			
5 -1.0	5.0						
		3.5	S-2	**CLAY (CL)** 5.0-8.5'- mottled light gray, brownish yellow, and yellowish brown, moist, soft, nonplastic, some silt			
				NO RECOVERY (NR) 8.5-10.0'			
10 -6.0	10.0						
		4.0	S-3	**CLAY WITH SAND (CL)** 10.0-11.0'- light gray, moist, medium stiff, fine to medium grained		collected: TR-2ND-GW01-10-14-0116 @1515 for TCL VOCs (8260C)	
				SILTY SAND (SM) 11.0-14.0'- light gray, wet, loose to medium dense, fine to medium grained, high silt content, strong brown bands at 13.2'			
				NO RECOVERY (NR) 14.0-15.0'			
15 -11.0	15.0						
		3.0	S-4	**SILTY SAND (SM)** 15.0-20.0'- light gray to pale brown, wet, loose to medium dense			

PROJECT NUMBER:	BORING NUMBER: TR-2ND-GW01	SHEET 2 OF 2

SOIL BORING LOG

PROJECT : Tower Road Disposal Areas - Phase II Remedial Investigation LOCATION : Harvey Point Defense Testing Activity (HPDTA), Hertford, NC

ELEVATION : 4.0 ft NAVD88 (natural ground elevation) DRILLING CONTRACTOR : Parratt-Wolff Drilling, Inc.\P. Poyner

DRILLING METHOD AND EQUIPMENT : Geoprobe 7822DT, 4 ¼ ID 8 ¾ O.D. HSA, 5 ft Macro Core Sampler

WATER LEVELS : 11.0 ft bgs START : 1/14/2016 END : 1/14/2016 LOGGER : T. Stewart\VBO

DEPTH BELOW EXISTING GRADE (ft)	INTERVAL (ft)	RECOVERY (in)	SAMPLE ID (TIME)	SOIL DESCRIPTION: SOIL NAME, USCS GROUP SYMBOL, COLOR, MOISTURE CONTENT, RELATIVE DENSITY OR CONSISTENCY, SOIL STRUCTURE, MINERALOGY	SYMBOLLIC LOG	COMMENTS	WELL DIAGRAM
20 -16.0	20.0			Bottom of Boring at 20.0 ft bgs on 1/14/2016			

PROJECT NUMBER:	BORING NUMBER: TR-2ND-GW02	SHEET 1 OF 1

SOIL BORING LOG

PROJECT : Tower Road Disposal Areas - Phase II Remedial Investigation

LOCATION : Harvey Point Defense Testing Activity (HPDTA), Hertford, NC

ELEVATION : 6.2 ft NAVD88 (natural ground elevation)

DRILLING CONTRACTOR : Parratt-Wolff Drilling, Inc.\P. Poyner

DRILLING METHOD AND EQUIPMENT : Geoprobe 7822DT, 4 ¼ ID 8 ¾ O.D. HSA, 5 ft Macro Core Sampler

WATER LEVELS : 14.0 ft bgs

START : 1/19/2016

END : 1/19/2016

LOGGER : T. Stewart\VBO

DEPTH BELOW EXISTING GRADE (ft)	INTERVAL (ft)	RECOVERY (in)	SAMPLE ID (TIME)	SOIL DESCRIPTION: SOIL NAME, USCS GROUP SYMBOL, COLOR, MOISTURE CONTENT, RELATIVE DENSITY OR CONSISTENCY, SOIL STRUCTURE, MINERALOGY	SYMBOLLIC LOG	COMMENTS	WELL DIAGRAM
6.2	0.0			**TOPSOIL** 0.0-0.6'			
		2.7	S-1	**CLAY WITH SILT (CL)** 0.6-2.7'- light greenish gray and brown, dry to moist, medium stiff, low plasticity, trace roots and sand			
				NO RECOVERY (NR) 2.7-5.0'			
5 1.2	5.0			**CLAY WITH SAND (CL)** 5.0-6.6'- yellowish brown, trace stron brown, dry, stiff, fine to medium grained, nonplastic			
		2.4	S-2	**CLAY WITH SILT (CL)** 6.6-7.4'- pale brown and light gray, dry, medium stiff, high silt content			
				NO RECOVERY (NR) 7.4-10.0'			
10 -3.8	10.0			**SILT/CLAY WITH SILT (ML-CL)** 10.0-15.0'- yellowish brown, moist to wet, soft to medium stiff, nonplastic, wet at 14.0' bgs			
		5.0	S-3			collected: TR-2ND-GW02-12-16-0116 @1515 for TCL VOCs (8260C)	
15 -8.8	15.0			Bottom of Boring at 15.0 ft bgs on 1/19/2016			

PROJECT NUMBER:	BORING NUMBER: TR-2ND-GW03	SHEET 1 OF 2

SOIL BORING LOG

PROJECT : Tower Road Disposal Areas - Phase II Remedial Investigation

LOCATION : Harvey Point Defense Testing Activity (HPDTA), Hertford, NC

ELEVATION : 5.6 ft NAVD88 (natural ground elevation)

DRILLING CONTRACTOR : Parratt-Wolff Drilling, Inc.\P. Poyner

DRILLING METHOD AND EQUIPMENT : Geoprobe 7822DT, 4 ¼ ID 8 ¾ O.D. HSA, 5 ft Macro Core Sampler

WATER LEVELS : 13.4 ft bgs

START : 1/15/2016

END : 1/15/2016

LOGGER : T. Stewart\VBO

DEPTH BELOW EXISTING GRADE (ft)	INTERVAL (ft)	RECOVERY (in)	SAMPLE ID (TIME)	SOIL DESCRIPTION: SOIL NAME, USCS GROUP SYMBOL, COLOR, MOISTURE CONTENT, RELATIVE DENSITY OR CONSISTENCY, SOIL STRUCTURE, MINERALOGY	SYMBOLLIC LOG	COMMENTS	WELL DIAGRAM
5.6	0.0			**TOPSOIL/GRASS** 0.0-0.4'			
				CLAY (CL) 0.4-2.3'- olive gray, moist, medium stiff, nonplastic to low plasticity, 5-7% coarse black organics			
		2.7	S-1	**NO RECOVERY (NR)** 2.3-5.0'			
5 0.6	5.0			**NO RECOVERY (NR)** 5.0-10.0'			
		0.0	S-2				
10 -4.4	10.0			**CLAY (CL)** 10.0-13.4'- pale brown and light gray, mottled 15% strong brown, dry to moist, trace silt		collected: TR-2ND-GW03-11-15-0116 @0830 for TCL VOCs (8260C)	
		4.1	S-3				
▽				**SILTY SAND (SM)** 13.4-14.1'- pale brown and light gray, wet, medium dense, fine to medium grained, nonplastic			
15 -9.4	15.0			**NO RECOVERY (NR)** 14.1-15.0'			
				SILTY SAND (SM) 15.0-30.0'- light gray, wet, very loose to loose, poorly graded, nonplastic fines, coarser sands from 22.5-25.0' bgs			
		5.0	S-4				

PROJECT NUMBER:	BORING NUMBER: TR-2ND-GW03	SHEET 2 OF 2

SOIL BORING LOG

PROJECT : Tower Road Disposal Areas - Phase II Remedial Investigation

LOCATION : Harvey Point Defense Testing Activity (HPDTA), Hertford, NC

ELEVATION : 5.6 ft NAVD88 (natural ground elevation)

DRILLING CONTRACTOR : Parratt-Wolff Drilling, Inc.\P. Poyner

DRILLING METHOD AND EQUIPMENT : Geoprobe 7822DT, 4 ¼ ID 8 ¾ O.D. HSA, 5 ft Macro Core Sampler

WATER LEVELS : 13.4 ft bgs

START : 1/15/2016

END : 1/15/2016

LOGGER : T. Stewart\VBO

DEPTH BELOW EXISTING GRADE (ft)	INTERVAL (ft)	RECOVERY (in)	SAMPLE ID (TIME)	SOIL DESCRIPTION: SOIL NAME, USCS GROUP SYMBOL, COLOR, MOISTURE CONTENT, RELATIVE DENSITY OR CONSISTENCY, SOIL STRUCTURE, MINERALOGY	SYMBOLLIC LOG	COMMENTS	WELL DIAGRAM
20 -14.4	20.0			20.0-24.0'- discolored yellowish brown			
		5.0	S-5				
				23.8-24.1'- strong brown banding			
25 -19.4	25.0					collected: TR-2ND-GW03-25-29-0116 @0825 for TCL VOCs (8260C)	
		5.0	S-6				
30 -24.4	30.0			Bottom of Boring at 30.0 ft bgs on 1/15/2016			

PROJECT NUMBER:	BORING NUMBER: TR-2ND-GW04	SHEET 1 OF 1

SOIL BORING LOG

PROJECT : Tower Road Disposal Areas - Phase II Remedial Investigation

LOCATION : Harvey Point Defense Testing Activity (HPDTA), Hertford, NC

ELEVATION : 3.9 ft NAVD88 (natural ground elevation)

DRILLING CONTRACTOR : Parratt-Wolff Drilling, Inc.\P. Poyner

DRILLING METHOD AND EQUIPMENT : Geoprobe 7822DT, 4 ¼ ID 8 ¾ O.D. HSA, 5 ft Macro Core Sampler

WATER LEVELS : 11.7 ft bgs

START : 1/14/2016

END : 1/14/2016

LOGGER : T. Stewart\VBO

DEPTH BELOW EXISTING GRADE (ft)	INTERVAL (ft)	RECOVERY (in)	SAMPLE ID (TIME)	SOIL DESCRIPTION: SOIL NAME, USCS GROUP SYMBOL, COLOR, MOISTURE CONTENT, RELATIVE DENSITY OR CONSISTENCY, SOIL STRUCTURE, MINERALOGY	SYMBOLLIC LOG	COMMENTS	WELL DIAGRAM
3.9	0.0			**TOPSOIL** 0.0-0.7'			
		3.5	S-1	**CLAY (CL)** 0.7-3.5'- variegated (browns, grays, greens), moist to dry, stiff, medium plasticity, roots and gravel at 2.8 ft bgs			
				NO RECOVERY (NR) 3.5-5.0'			
5 -1.1	5.0						
		3.0	S-2	**CLAY (CL)** 5.0-8.0'- mottled light gray and brownish yellow, moist, soft to medium stiff, nonplastic, cohesive trace silt			
				NO RECOVERY (NR) 8.0-10.0'			
10 -6.1	10.0						
		5.0	S-3	**SILTY SAND (SM)** 10.0-15.0'- pale brown, trace strong brown mottling, moist to wet, dense to loose, fine to medium grained, nonplastic, wet at 11.7 ft bgs, coarser sands 12.5-15.0 ft bgs		collected: TR-2ND-GW04-10-14-0116 @1555 for TCL VOCs (8260C)	
15 -11.1	15.0			Bottom of Boring at 15.0 ft bgs on 1/14/2016			

PROJECT NUMBER:	BORING NUMBER: TR-2ND-GW05	SHEET 1 OF 2

SOIL BORING LOG

PROJECT : Tower Road Disposal Areas - Phase II Remedial Investigation

LOCATION : Harvey Point Defense Testing Activity (HPDTA), Hertford, NC

ELEVATION : 6.0 ft NAVD88 (natural ground elevation)

DRILLING CONTRACTOR : Parratt-Wolff Drilling, Inc.\P. Poyner

DRILLING METHOD AND EQUIPMENT : Geoprobe 7822DT, 4 ¼ ID 8 ¾ O.D. HSA, 5 ft Macro Core Sampler

WATER LEVELS : 15.0 ft bgs

START : 1/15/2016

END : 1/15/2016

LOGGER : T. Stewart\VBO

DEPTH BELOW EXISTING GRADE (ft)	INTERVAL (ft)	RECOVERY (in)	SAMPLE ID (TIME)	SOIL DESCRIPTION: SOIL NAME, USCS GROUP SYMBOL, COLOR, MOISTURE CONTENT, RELATIVE DENSITY OR CONSISTENCY, SOIL STRUCTURE, MINERALOGY	SYMBOLLIC LOG	COMMENTS	WELL DIAGRAM
6.0	0.0			**TOPSOIL** 0.0-0.7'			
		3.7	S-1	**CLAY WITH SILT (CL)** 0.7-3.7'- greenish gray, moist, stiff, nonplastic, trace gravel			
				NO RECOVERY (NR) 3.7-5.0'			
5 1.0	5.0			**NO RECOVERY (NR)** 5.0-10.0'			
		0.0	S-2				
10 -4.0	10.0			**CLAY (CL)** 10.0-14.3'- mottled light gray and yellowish brown, 10-15% strong brown mottling, moist to dry, medium stiff to stiff, nonplastic, trace silt near bottom			
		4.3	S-3				
				NO RECOVERY (NR) 14.3-15.0'			
15 -9.0	15.0			**SILTY SAND (SM)** 15.0-25.0'- light gray, wet, very loose to loose, fine to medium grained, nonplastic		collected: TR-2ND-GW05-15-19-0116 @1050 for TCL VOCs (8260C)	
		5.0	S-4				

PROJECT NUMBER:	BORING NUMBER: TR-2ND-GW05	SHEET 2 OF 2

SOIL BORING LOG

PROJECT : Tower Road Disposal Areas - Phase II Remedial Investigation

LOCATION : Harvey Point Defense Testing Activity (HPDTA), Hertford, NC

ELEVATION : 6.0 ft NAVD88 (natural ground elevation)

DRILLING CONTRACTOR : Parratt-Wolff Drilling, Inc.\P. Poyner

DRILLING METHOD AND EQUIPMENT : Geoprobe 7822DT, 4 ¼ ID 8 ¾ O.D. HSA, 5 ft Macro Core Sampler

WATER LEVELS : 15.0 ft bgs

START : 1/15/2016

END : 1/15/2016

LOGGER : T. Stewart\VBO

DEPTH BELOW EXISTING GRADE (ft)	INTERVAL (ft)	RECOVERY (in)	SAMPLE ID (TIME)	SOIL DESCRIPTION: SOIL NAME, USCS GROUP SYMBOL, COLOR, MOISTURE CONTENT, RELATIVE DENSITY OR CONSISTENCY, SOIL STRUCTURE, MINERALOGY	SYMBOLLIC LOG	COMMENTS	WELL DIAGRAM
20 -14.0	20.0						
		5.0	S-5	21.0-24.0'- discolored yellowish brown			
25 -19.0	25.0						
		0.0	S-6	**NO RECOVERY (NR)** 25.0-30.0'		collected: TR-2ND-GW05-25-29-0116 @1055, TR-2ND-GW05D-25-29-0116 @1100 for TCL VOCs (8260C)	
30 -24.0	30.0			Bottom of Boring at 30.0 ft bgs on 1/15/2016			

PROJECT NUMBER:	BORING NUMBER: TR-2ND-GW06	SHEET 1 OF 1

SOIL BORING LOG

PROJECT : Tower Road Disposal Areas - Phase II Remedial Investigation

LOCATION : Harvey Point Defense Testing Activity (HPDTA), Hertford, NC

ELEVATION : 6.4 ft NAVD88 (natural ground elevation)

DRILLING CONTRACTOR : Parratt-Wolff Drilling, Inc.\P. Poyner

DRILLING METHOD AND EQUIPMENT : Geoprobe 7822DT, 4 ¼ ID 8 ¾ O.D. HSA, 5 ft Macro Core Sampler

WATER LEVELS : 14.1 ft bgs

START : 1/19/2016

END : 1/19/2016

LOGGER : T. Stewart\VBO

DEPTH BELOW EXISTING GRADE (ft)	INTERVAL (ft)	RECOVERY (in)	SAMPLE ID (TIME)	SOIL DESCRIPTION: SOIL NAME, USCS GROUP SYMBOL, COLOR, MOISTURE CONTENT, RELATIVE DENSITY OR CONSISTENCY, SOIL STRUCTURE, MINERALOGY	SYMBOLLIC LOG	COMMENTS	WELL DIAGRAM
6.4	0.0			**TOPSOIL** 0.0-0.7'			
		2.8	S-1	**CLAY WITH SILT (CL-ML)** 0.7-2.8'- greenish gray and olive, moist, medium stiff, low to non plasticity			
				NO RECOVERY (NR) 2.8-5.0'			
5 / 1.4	5.0	4.7	S-2	**CLAY WITH SILT AND SAND (CL)** 5.0-9.7'- mottled pale brown, light gray, and strong brown, dry, medium stiff to very stiff, pockets of moisture			
10 / -3.6	10.0			**NO RECOVERY (NR)** 9.7-10.0'			
		5.0	S-3	**CLAY WITH SAND / SILTY SAND (SM)** 10.0-15.0'- pale brown to light gray, moist to wet, soft, dense, fine to medium grained, nonplastic		collected: TR-2ND-GW06-11-15-0116 @1330 for TCL VOCs (8260C)	
15 / -8.6	15.0			Bottom of Boring at 15.0 ft bgs on 1/19/2016			

PROJECT NUMBER:	BORING NUMBER: TR-2ND-GW07	SHEET 1 OF 1

SOIL BORING LOG

PROJECT : Tower Road Disposal Areas - Phase II Remedial Investigation

LOCATION : Harvey Point Defense Testing Activity (HPDTA), Hertford, NC

ELEVATION : 5.4 ft NAVD88 (natural ground elevation)

DRILLING CONTRACTOR : Parratt-Wolff Drilling, Inc.\P. Poyner

DRILLING METHOD AND EQUIPMENT : Geoprobe 7822DT, 4 ¼ ID 8 ¾ O.D. HSA, 5 ft Macro Core Sampler

WATER LEVELS : 14.1 ft bgs

START : 1/19/2016

END : 1/19/2016

LOGGER : T. Stewart\VBO

DEPTH BELOW EXISTING GRADE (ft)	INTERVAL (ft)	RECOVERY (in)	SAMPLE ID (TIME)	SOIL DESCRIPTION: SOIL NAME, USCS GROUP SYMBOL, COLOR, MOISTURE CONTENT, RELATIVE DENSITY OR CONSISTENCY, SOIL STRUCTURE, MINERALOGY	SYMBOLLIC LOG	COMMENTS	WELL DIAGRAM
5.4	0.0			**TOPSOIL** 0.0-0.4'			
		3.7	S-1	**CLAY WITH SAND AND SILT (CL)** 0.4-3.7'- dark grayish brown and greenish gray, dry, medium stiff to stiff, low plasticity, trace roots			
				NO RECOVERY (NR) 3.7-5.0'			
5 0.4	5.0						
		3.4	S-2	**CLAY WITH SILT (CL-ML)** 5.0-6.2'- olive and pale brown, dry to moist, soft, nonplastic, trace fine to medium grained sand			
				CLAY WITH SAND (CL/SC) 6.2-8.4'- pale brown and light gray, trace strong brown, dry to moist, medium stiff, fine grained, nonplastic			
				NO RECOVERY (NR) 8.4-10.0'			
10 -4.6	10.0						
		4.1	S-3	**SILT WITH CLAY (ML)** 10.0-14.1'- pale brown and yellowish brown, moist, soft, nonplastic, trace very fine grained sands		collected: TR-2ND-GW07-11-15-0116 @1200 for TCL VOCs (8260C)	
				NO RECOVERY (NR) 14.1-15.0'			
15 -9.6	15.0			Bottom of Boring at 15.0 ft bgs on 1/19/2016			

PROJECT NUMBER:	BORING NUMBER: TR-2ND-GW08	SHEET 1 OF 2

SOIL BORING LOG

PROJECT : Tower Road Disposal Areas - Phase II Remedial Investigation

LOCATION : Harvey Point Defense Testing Activity (HPDTA), Hertford, NC

ELEVATION : 6.2 ft NAVD88 (natural ground elevation)

DRILLING CONTRACTOR : Parratt-Wolff Drilling, Inc.\P. Poyner

DRILLING METHOD AND EQUIPMENT : Geoprobe 7822DT, 4 ¼ ID 8 ¾ O.D. HSA, 5 ft Macro Core Sampler

WATER LEVELS : 13.6 ft bgs

START : 1/19/2016

END : 1/19/2016

LOGGER : T. Stewart\VBO

DEPTH BELOW EXISTING GRADE (ft)	INTERVAL (ft)	RECOVERY (in)	SAMPLE ID (TIME)	SOIL DESCRIPTION: SOIL NAME, USCS GROUP SYMBOL, COLOR, MOISTURE CONTENT, RELATIVE DENSITY OR CONSISTENCY, SOIL STRUCTURE, MINERALOGY	SYMBOLLIC LOG	COMMENTS	WELL DIAGRAM
6.2	0.0			**TOPSOIL** 0.0-0.7'			
		3.3	S-1	**CLAY (CL)** 0.7-3.3'- dark brown and greenish gray, moist, stiff, low plasticity, some gravel and road base			
				NO RECOVERY (NR) 3.3-5.0'			
5 / 1.2	5.0						
		2.2	S-2	**CLAY WITH SILT (CL-ML)** 5.0-7.2'- yellowish brown, pale brown, and light gray, dry, medium stiff to stiff, nonplastic, high silt content			
				NO RECOVERY (NR) 7.2-10.0'			
10 / -3.9	10.0						
		3.6	S-3	**CLAY WITH SILT (CL)** 10.0-11.1'- brown, moist, stiff, nonplastic, pockets of moisture		collected: TR-2ND-GW08-11-15-0116 @1000 for TCL VOCs (8260C)	
				CLAY WITH SILT (CL) 11.1-13.6'- pale brown, yellowish brown, and strong brown mottled, moist to wet, soft to medium stiff, nonplastic			
				NO RECOVERY (NR) 13.6-15.0'			
15 / -8.9	15.0						
		5.0	S-4	**SILTY SAND (SM)** 15.0-24.5'- light gray, wet, loose to medium dense, fine to medium grained, nonplastic, trace yellowish brown discoloration			

PROJECT NUMBER:	BORING NUMBER: TR-2ND-GW08	SHEET 2 OF 2

SOIL BORING LOG

PROJECT : Tower Road Disposal Areas - Phase II Remedial Investigation

LOCATION : Harvey Point Defense Testing Activity (HPDTA), Hertford, NC

ELEVATION : 6.2 ft NAVD88 (natural ground elevation)

DRILLING CONTRACTOR : Parratt-Wolff Drilling, Inc.\P. Poyner

DRILLING METHOD AND EQUIPMENT : Geoprobe 7822DT, 4 ¼ ID 8 ¾ O.D. HSA, 5 ft Macro Core Sampler

WATER LEVELS : 13.6 ft bgs

START : 1/19/2016

END : 1/19/2016

LOGGER : T. Stewart\VBO

DEPTH BELOW EXISTING GRADE (ft)	INTERVAL (ft)	RECOVERY (in)	SAMPLE ID (TIME)	SOIL DESCRIPTION: SOIL NAME, USCS GROUP SYMBOL, COLOR, MOISTURE CONTENT, RELATIVE DENSITY OR CONSISTENCY, SOIL STRUCTURE, MINERALOGY	SYMBOLLIC LOG	COMMENTS	WELL DIAGRAM
20 -13.9	20.0						
		4.5	S-5				
25 -18.9	25.0			**NO RECOVERY (NR)** 24.5-25.0'			
		5.0	S-6	**SILTY SAND (SM)** 25.0-30.0'- light gray to pale brown, wet, loose, fine to medium grained, nonplastic, trace clay		collected: TR-2ND-GW08-25-29-0116 @1015 for TCL VOCs (8260C)	
30 -23.9	30.0			Bottom of Boring at 30.0 ft bgs on 1/19/2016			

PROJECT NUMBER:	BORING NUMBER: TR-2ND-GW09	SHEET 1 OF 2

SOIL BORING LOG

PROJECT : Tower Road Disposal Areas - Phase II Remedial Investigation

LOCATION : Harvey Point Defense Testing Activity (HPDTA), Hertford, NC

ELEVATION : 5.2 ft NAVD88 (natural ground elevation)

DRILLING CONTRACTOR : Parratt-Wolff Drilling, Inc.\P. Poyner

DRILLING METHOD AND EQUIPMENT : Geoprobe 7822DT, 4 ¼ ID 8 ¾ O.D. HSA, 5 ft Macro Core Sampler

WATER LEVELS : ---

START : 1/19/2016

END : 1/19/2016

LOGGER : T. Stewart\VBO

DEPTH BELOW EXISTING GRADE (ft)	INTERVAL (ft)	RECOVERY (in)	SAMPLE ID (TIME)	SOIL DESCRIPTION: SOIL NAME, USCS GROUP SYMBOL, COLOR, MOISTURE CONTENT, RELATIVE DENSITY OR CONSISTENCY, SOIL STRUCTURE, MINERALOGY	SYMBOLLIC LOG	COMMENTS	WELL DIAGRAM
5.2	0.0			**TOPSOIL** 0.0-0.3'			
		4.2	S-1	**CLAY (CL)** 0.3-4.2'- dark grayish brown, moist, soft, non plasticity, roots and trace gravel/debris			
				NO RECOVERY (NR) 4.2-5.0'			
5 / 0.2	5.0						
		4.1	S-2	**CLAY (CL)** 5.0-5.8'- yellowish brown and light gray, dry to moist, medium stiff, non plasticity, trace silt and sand			
				CLAY WITH SILT (CL) 5.8-9.1'- brown, light gray, and yellowish brown, trace strong brown mottling, dry, medium stiff, non plasticity			
				NO RECOVERY (NR) 9.1-10.0'			
10 / -4.9	10.0						
		3.3	S-3	**CLAY WITH SAND (CL)** 10.0-13.3'- pale brown, dry, soft to medium stiff, very fine to fine grained, non plasticity, high silt content		collected: TR-2ND-GW09-12-16-0116 @1115, TR-2ND-GW09D-12-16-0116 @1120 for TCL VOCs (8260C) for TCL VOCs (8260C)	
				NO RECOVERY (NR) 13.3-15.0'			
15 / -9.9	15.0						
		2.5	S-4	**SILT WITH SAND (ML)** pale brown'- moist, very fine to fine grained, non plasticity, rapid dilatancy			

PROJECT NUMBER:	BORING NUMBER: TR-2ND-GW09	SHEET 2 OF 2

SOIL BORING LOG

PROJECT : Tower Road Disposal Areas - Phase II Remedial Investigation LOCATION : Harvey Point Defense Testing Activity (HPDTA), Hertford, NC (8

ELEVATION : 5.2 ft NAVD88 (natural ground elevation) DRILLING CONTRACTOR : Parratt-Wolff Drilling, Inc.\P. Poyner

DRILLING METHOD AND EQUIPMENT : Geoprobe 7822DT, 4 ¼ ID 8 ¾ O.D. HSA, 5 ft Macro Core Sampler

WATER LEVELS : --- START : 1/19/2016 END : 1/19/2016 LOGGER : T. Stewart\VBO

DEPTH BELOW EXISTING GRADE (ft)	INTERVAL (ft)	RECOVERY (in)	SAMPLE ID (TIME)	SOIL DESCRIPTION: SOIL NAME, USCS GROUP SYMBOL, COLOR, MOISTURE CONTENT, RELATIVE DENSITY OR CONSISTENCY, SOIL STRUCTURE, MINERALOGY	SYMBOLLIC LOG	COMMENTS	WELL DIAGRAM
				NO RECOVERY (NR) 17.5-20.0'			
	20.0			Bottom of Boring at 15.0 ft bgs on 1/19/2016			

PROJECT NUMBER:	BORING NUMBER: TR-2ND-GW10	SHEET 1 OF 1

SOIL BORING LOG

PROJECT : Tower Road Disposal Areas - Phase II Remedial Investigation

LOCATION : Harvey Point Defense Testing Activity (HPDTA), Hertford, NC

ELEVATION : 6.3 ft NAVD88 (natural ground elevation)

DRILLING CONTRACTOR : Parratt-Wolff Drilling, Inc.\P. Poyner

DRILLING METHOD AND EQUIPMENT : Geoprobe 7822DT, 4 ¼ ID 8 ¾ O.D. HSA, 5 ft Macro Core Sampler

WATER LEVELS : 12.6 ft bgs

START : 1/19/2016

END : 1/19/2016

LOGGER : T. Stewart\VBO

DEPTH BELOW EXISTING GRADE (ft)	INTERVAL (ft)	RECOVERY (in)	SAMPLE ID (TIME)	SOIL DESCRIPTION: SOIL NAME, USCS GROUP SYMBOL, COLOR, MOISTURE CONTENT, RELATIVE DENSITY OR CONSISTENCY, SOIL STRUCTURE, MINERALOGY	SYMBOLLIC LOG	COMMENTS	WELL DIAGRAM
6.3	0.0			**TOPSOIL** 0.0-0.3'			
				CLAY (CL) 0.3-2.1'- dark greenish gray, moist, low plasticity, little to no silt			
		4.3	S-1	**CLAYEY SAND (SC)** 2.1-3.8'- mottled light gray with strong and pale brown, dry to moist, very fine to fine grained, low plasticity			
				CLAY (CL) 3.8-4.3'- brownish yellow and yellowish brown, moist, medium stiff, trace silt and sands			
5	5.0			**NO RECOVERY (NR)** 4.3-5.0'			
1.3				**NO RECOVERY (NR)** 5.0-10.0'			
		0.0	S-2				
10	10.0						
-3.7				**CLAY WITH SAND (CL)** 10.0-11.2'- pale brown and brown, trace strong brown mottling at 10.4-10.6', moist, fine to medium grained, non plasticity			
				SILTY SAND (SM) 11.2-13.1'- light gray, moist to wet, fine to medium grained, non plasticity, high silt content from 11.2-12.6', wet at 12.6' bgs			
▽		3.1	S-3				
				NO RECOVERY (NR) 13.1-15.0'		collected: TR-2ND-GW10-13-17-0116 @1600 for TCL VOCs (8260C)	
15	15.0						
-8.7				Bottom of Boring at 15.0 ft bgs on 1/19/2016			

PROJECT NUMBER:	BORING NUMBER: TR-2ND-GW11	SHEET 1 OF 2

SOIL BORING LOG

PROJECT : Tower Road Disposal Areas - Phase II Remedial Investigation

LOCATION : Harvey Point Defense Testing Activity (HPDTA), Hertford, NC

ELEVATION : 3.9 ft NAVD88 (natural ground elevation)

DRILLING CONTRACTOR : Parratt-Wolff Drilling, Inc.\P. Poyner

DRILLING METHOD AND EQUIPMENT : Geoprobe 7822DT, 4 ¼ ID 8 ¾ O.D. HSA, 5 ft Macro Core Sampler

WATER LEVELS : 10.0 ft bgs

START : 1/20/2016

END : 1/20/2016

LOGGER : T. Stewart\VBO

DEPTH BELOW EXISTING GRADE (ft)	INTERVAL (ft)	RECOVERY (in)	SAMPLE ID (TIME)	SOIL DESCRIPTION: SOIL NAME, USCS GROUP SYMBOL, COLOR, MOISTURE CONTENT, RELATIVE DENSITY OR CONSISTENCY, SOIL STRUCTURE, MINERALOGY	SYMBOLLIC LOG	COMMENTS	WELL DIAGRAM
3.9	0.0			**TOPSOIL WITH ROOTS** 0.0-0.6'			
		3.8	S-1	**CLAY (CL)** 0.6-3.8'- yellowish brown and pale brown, (10YR 5/8 and 7/4), dry to moist, soft, nonplastic to low plasticity			
				NO RECOVERY (NR) 3.8-5.0'			
5 -1.1	5.0						
		2.5	S-2	**CLAY WITH SILT (CL-ML)** 5.0-7.5'- mottled light gray, brownish yellow, and pale brown, strong brown mottling to 15%, moist, medium stiff, nonplastic, high silt content			
				NOR RECOVERY (NR) 7.5-10.0'			
10 -6.1	10.0						
		4.3	S-3	**CLAY WITH SILT AND SAND (CL)** 10.0-14.3'- yellowish brown, strong brown, wet, soft, fine to medium grained, nonplastic, roots, wet at 10.0' bgs		collected: TR-2ND-GW11-10-14-0116 @0945	
				NOR RECOVERY (NR) 14.4-15.0'			
15 -11.1	15.0			**SILTY SAND (SM)** 15.0-30.0'- pale brown and light gray, wet, loose, fine to medium grained, 21.0-22.0' bgs			
		5.0	S-4				

PROJECT NUMBER:	BORING NUMBER: TR-2ND-GW11	SHEET 2 OF 2

SOIL BORING LOG

PROJECT : Tower Road Disposal Areas - Phase II Remedial Investigation

LOCATION : Harvey Point Defense Testing Activity (HPDTA), Hertford, NC

ELEVATION : 3.9 ft NAVD88 (natural ground elevation)

DRILLING CONTRACTOR : Parratt-Wolff Drilling, Inc.\P. Poyner

DRILLING METHOD AND EQUIPMENT : Geoprobe 7822DT, 4 ¼ ID 8 ¾ O.D. HSA, 5 ft Macro Core Sampler

WATER LEVELS : 10.0 ft bgs

START : 1/20/2016

END : 1/20/2016

LOGGER : T. Stewart\VBO

DEPTH BELOW EXISTING GRADE (ft)	INTERVAL (ft)	RECOVERY (in)	SAMPLE ID (TIME)	SOIL DESCRIPTION: SOIL NAME, USCS GROUP SYMBOL, COLOR, MOISTURE CONTENT, RELATIVE DENSITY OR CONSISTENCY, SOIL STRUCTURE, MINERALOGY	SYMBOLLIC LOG	COMMENTS	WELL DIAGRAM
20 -16.1	20.0						
		5.0	S-5				
25 -21.1	25.0					collected: TR-2ND-GW11-25-29-0116 @0950 for TCL VOCs (8260C)	
		5.0	S-6				
30 -26.1	30.0			Bottom of Boring at 30.0 ft bgs on 1/20/2016			

PROJECT NUMBER:	BORING NUMBER: TR-2ND-GW12	SHEET 1 OF 1

SOIL BORING LOG

PROJECT : Tower Road Disposal Areas - Phase II Remedial Investigation

LOCATION : Harvey Point Defense Testing Activity (HPDTA), Hertford, NC

ELEVATION : 4.7 ft NAVD88 (natural ground elevation)

DRILLING CONTRACTOR : Parratt-Wolff Drilling, Inc.\P. Poyner

DRILLING METHOD AND EQUIPMENT : Geoprobe 7822DT, 4 ¼ ID 8 ¾ O.D. HSA, 5 ft Macro Core Sampler

WATER LEVELS : 10.0 ft bgs

START : 1/20/2016

END : 1/20/2016

LOGGER : T. Stewart\VBO

DEPTH BELOW EXISTING GRADE (ft)	INTERVAL (ft)	RECOVERY (in)	SAMPLE ID (TIME)	SOIL DESCRIPTION: SOIL NAME, USCS GROUP SYMBOL, COLOR, MOISTURE CONTENT, RELATIVE DENSITY OR CONSISTENCY, SOIL STRUCTURE, MINERALOGY	SYMBOLLIC LOG	COMMENTS	WELL DIAGRAM
4.7	0.0	4.7	S-1	**CLAY WITH SILT (CL)** 0.0-4.7'- very dark brown, moist, low plasticity, high organic content			
5 -0.3	5.0	2.8	S-2	**NO RECOVERY (NR)** 4.7-5.0' **CLAY WITH SAND (CL)** 5.0-6.4'- mottled light gray, dark greenish gray, and pale brown, moist, soft, very fine to fine grained, nonplastic **CLAY WITH SILT AND SAND (CL)** 6.4-7.8'- same color as above, moist, soft, medium grained, nonplastic, high silt content **NO RECOVERY (NR)** 7.8-10.0'			
▽10 -5.3	10.0	5.0	S-3	**SILTY SAND (SM)** 10.0-15.0'- light gray to pale brown, wet, very fine to medium grained, nonplastic, high silt content		collected: TR-2ND-GW12-11-15-0116 @1025 for TCL VOCs (8260C)	
15 -10.3	15.0			Bottom of Boring at 15.0 ft bgs on 1/20/2016			

PROJECT NUMBER	BORING NUMBER	
439611.01.RI	TR-5TH-MW01	SHEET 1 OF 2

SOIL BORING LOG

PROJECT :	Towers Road Disposal Area Phase I RI	DRILLING CONTRACTOR AND DRILLER :	Parratt Wolff/J. Ellingworth, J. Terry
LOCATION/SITE :	HPDTA Hertford, NC/5th Street Disposal Area	DRILLING METHOD AND EQUIPMENT USED :	IRA300, HAS 4.25" ID, 4' Macrocore Sampler
DATE :	6/12/2013	WATER LEVEL :	4.2' bgs
START TIME :	1250	GROUND SURFACE CONDITIONS :	Mulch (Recent Vegetation Grubbing)
END TIME :	1355	LOGGER :	T. Stewart/VBO

DEPTH (FT)	SAMPLE INTERVAL (FT)	SAMPLE RECORVERY (FT)	SAMPLE COLLECTION TIME	SOIL DESCRIPTION SOIL NAME, USCS GROUP SYMBOL, COLOR, MOISTURE CONTENT, RELATIVE DENSITY, OR CONSISTENCY, SOIL STRUCTURE, MINERALOGY	COMMENTS DEPTH OF CASING, DRILLING RATE, DRILLING FLUID LOSS, TESTS, AND INSTRUMENTATION. PID (ppm)
	0-4	2.0/4.0	NOT SAMPLED (NS)	0.0-2.0: Silty SAND (SM) brown (7.5YR 5/3), dry, medium dense, low plastic, fines, roots, gravel, metal, and rock debris 2.0-4.0: No Recovery (NR)	6.6 NA
5	4-8	2.4/4.0	NS	4.0-5.7: NR 5.7-8.0: Silty SAND (SM) dark greenish gray (Gley 1 5/5GY), wet, loose to medium dense, very fine to fine grain sands, nonplastic, light greenish gray mottling	NA 5.4
10	8-12	4.0/4.0	NS	8.0-9.4: Silty SAND (SM) dark greenish gray (Gley 1 5/5GY), wet, loose to medium dense, very fine to fine grain sands, nonplastic, light greenish gray mottling 9.4-12.0: Clayey SAND (SC) yellowish brown (10YR 5/6) with light greenish gray mottling, fine grain to coarse sands, medium plasticity,	7.0 11.0
15	12-16	4.0/4.0	NS	12.0-16.0: Silty SAND (SM) pale brown (2.5Y 7/4) to light gray (10YR 7/1), mottled strong brown, wet, very loose to loose, abundant micas, some black particles, very fine grain to fine grain	9.4 10.1
20	16-20	4.0/4.0	NS	16.0-20.0: Silty SAND (SM) pale brown (2.5Y 7/4) to light gray (10YR 7/1), mottled strong brown, wet, very loose to loose, abundant micas, some black particles, very fine grain to fine grain	9.1 8.4
	20-24	4.0/4.0	NS	20.0-24.0: Silty SAND (SM) reddish yellow (7.5YR 6/8), mottled strong brown, wet, very loose to loose, abundant micas, some black particles, very fine grain to fine grain	6.2 7.7
25	24-28	4.0/4.0	NS	24.0-25.0: Clayey SAND (SC) pale brown (2.5Y 7/4), light gray (10YR 7/1) and strong brown (7.5YR 5/6), wet, very stiff, medium to high plasticity, medium to coarse sands, trace fine grain black laminations 25.0-28.0: Silty SAND/poorly sorted sand (SM-SP), wet, pale brown (2.5Y 7/4), very loose to loose, medium grain	7.6 6.4
30	28-32	4.0/4.0	NS	28.0-32.0: Silty sand/poorly sorted SAND (SM-SP), wet, pale brown (2.5Y 7/4), very loose to loose, coarse grain, laminated with fine grain black particles	5.1

CH2MHILL	PROJECT NUMBER 439611.01.RI	BORING NUMBER TR-5TH-MW01	SHEET 2 OF 2

SOIL BORING LOG

PROJECT :	Towers Road Disposal Area Phase I RI	DRILLING CONTRACTOR AND DRILLER :	Parratt Wolff/J. Ellingworth, J. Terry
LOCATION/SITE :	HPDTA Hertford, NC/5th Street Disposal Area	DRILLING METHOD AND EQUIPMENT USED :	IRA300, HAS 4.25" ID, 4' Macrocore Sampler
DATE :	6/12/2013	WATER LEVEL :	4.2' bgs
START TIME :	1250	GROUND SURFACE CONDITIONS :	Mulch (Recent Vegetation Grubbing)
END TIME :	1355	LOGGER :	T. Stewart/VBO

DEPTH (FT)	SAMPLE INTERVAL (FT)	SAMPLE RECORVERY (FT)	SAMPLE COLLECTION TIME	SOIL DESCRIPTION SOIL NAME, USCS GROUP SYMBOL, COLOR, MOISTURE CONTENT, RELATIVE DENSITY, OR CONSISTENCY, SOIL STRUCTURE, MINERALOGY	COMMENTS DEPTH OF CASING, DRILLING RATE, DRILLING FLUID LOSS, TESTS, AND INSTRUMENTATION. PID (ppm)
	28-32	4.0/4.0	NS		5.9
				End Boring at 32' bgs	
35					
40					
45					
50					
55					

CH2MHILL	PROJECT NUMBER 439611.01.RI	BORING NUMBER TR-5TH-MW02	SHEET 1 OF 2

SOIL BORING LOG

PROJECT :	Towers Road Disposal Area Phase I RI	DRILLING CONTRACTOR AND DRILLER :	Parratt Wolff/J. Ellingworth, J. Terry
LOCATION/SITE :	HPDTA Hertford, NC/5th Street Disposal Area	DRILLING METHOD AND EQUIPMENT USED :	IRA300, HAS 4.25" ID, 4' Macrocore Sampler
DATE :	6/13/2013	WATER LEVEL :	4.5' bgs
START TIME :	1325	GROUND SURFACE CONDITIONS :	Mulch (Recent Vegetation Grubbing)
END TIME :	1400	LOGGER :	T. Stewart/VBO

DEPTH (FT)	SAMPLE INTERVAL (FT)	SAMPLE RECORVERY (FT)	SAMPLE COLLECTION TIME	SOIL DESCRIPTION SOIL NAME, USCS GROUP SYMBOL, COLOR, MOISTURE CONTENT, RELATIVE DENSITY, OR CONSISTENCY, SOIL STRUCTURE, MINERALOGY	COMMENTS DEPTH OF CASING, DRILLING RATE, DRILLING FLUID LOSS, TESTS, AND INSTRUMENTATION. PID (ppm)
	0-4	4.0/4.0	NOT SAMPLED (NS)	0.0-1.0: Clayey SAND (SC) very dark gray (5YR 3/1), dry, medium dense, low plastic, glass and gravel debris 1.0-4.0: Sandy CLAY w/silt (CL), mottled light gray, pale brown w/yellowish brown mottling (2.5Y 7/4), medium dense sand, stiff to very stiff, low plasticity	3.6 1.7
5	4-8	4.0/4.0	NS	4.0-8.0: SILT w/sand and silty SAND (ML-SM), pale brown (2.5Y 7/4), trace greenish gray mottling at 4.8-5.4' bgs, coarse brown organics at 4.2-4.5' bgs, low plastic fines, trace roots, very fine grain sands, high silt content, tight pore spaces	3.5 5.1
10	8-12	4.0/4.0	NS	8.0-9.0: SILT w/sand and silty SAND (ML-SM), pale brown (2.5Y 7/4), trace greenish gray mottling at 4.8-5.4' bgs, coarse brown organics at 4.2-4.5' bgs, low plastic fines, trace roots, very fine grain sands, high silt content, tight pore spaces 9.0-11.5: Clayey SAND (SC), pale brown, wet, low to medium plasticity 11.5-12.0: Silty SAND (SM) yellowish brown (10YR 5/5), wet, coarse	5.8 5.0
15	12-16	4.0/4.0	NS	12.0-16.0: Silty SAND (SM) pale yellow (5Y 7/3), wet, coarse grain	5.9 3.5
20	16-20	4.0/4.0	NS	16.0-20.0: Silty SAND (SM) pale yellow (5Y 7/3), wet, coarse grain	4.7 5.0
25	20-24	4.0/4.0	NS	20.0-24.0: Silty SAND (SM) pale yellow (5Y 7/3), wet, coarse grain	5.7 4.4
30	24-28	4.0/4.0	NS	24.0-27.5: Silty SAND (SM) discolored yellowish brown (10YR 5/8), wet, coarse grain 27.5-28.0: Clayey SAND (SC) pale yellow light gray (5Y 7/3-2) w/ strong brown mottling, wet, coarse grain	5.2 5.0
	28-32	4.0/4.0	NS	28.0-32.0: Clayey SAND (SC) pale yellow light gray (5Y 7/3-2) w/ strong brown mottling, wet, coarse grain	4.1

CH2MHILL	PROJECT NUMBER 439611.01.RI	BORING NUMBER TR-5TH-MW02	SHEET 2 OF 2

SOIL BORING LOG

PROJECT :	Towers Road Disposal Area Phase I RI	DRILLING CONTRACTOR AND DRILLER :	Parratt Wolff/J. Ellingworth, J. Terry
LOCATION/SITE :	HPDTA Hertford, NC/5th Street Disposal Area	DRILLING METHOD AND EQUIPMENT USED :	IRA300, HAS 4.25" ID, 4' Macrocore Sampler
DATE :	6/13/2013	WATER LEVEL :	4.5' bgs
START TIME :	1325	GROUND SURFACE CONDITIONS :	Mulch (Recent Vegetation Grubbing)
END TIME :	1400	LOGGER :	T. Stewart/VBO

DEPTH (FT)	SAMPLE INTERVAL (FT)	SAMPLE RECORVERY (FT)	SAMPLE COLLECTION TIME	SOIL DESCRIPTION SOIL NAME, USCS GROUP SYMBOL, COLOR, MOISTURE CONTENT, RELATIVE DENSITY, OR CONSISTENCY, SOIL STRUCTURE, MINERALOGY	COMMENTS DEPTH OF CASING, DRILLING RATE, DRILLING FLUID LOSS, TESTS, AND INSTRUMENTATION. PID (ppm)
	28-32	4.0/4.0	NS		3.8
				End Boring at 32' bgs	
35					
40					
45					
50					
55					

CH2MHILL	PROJECT NUMBER 439611.01.RI	BORING NUMBER TR-5TH-SB03	SHEET 1 OF 1

SOIL BORING LOG

PROJECT :	Towers Road Disposal Area Phase I RI	DRILLING CONTRACTOR AND DRILLER :	Parratt Wolff/J. Ellingworth, J. Terry
LOCATION/SITE :	HPDTA Hertford, NC/Background	DRILLING METHOD AND EQUIPMENT USED :	IRA300, HAS 4.25" ID, 4' Macrocore Sampler
DATE :	6/17/2013	WATER LEVEL :	4' bgs
START TIME :	1115	GROUND SURFACE CONDITIONS :	Grass Cover
END TIME :	1245	LOGGER :	T. Stewart/VBO

DEPTH (FT)	SAMPLE INTERVAL (FT)	SAMPLE RECORVERY (FT)	SAMPLE COLLECTION TIME	SOIL DESCRIPTION SOIL NAME, USCS GROUP SYMBOL, COLOR, MOISTURE CONTENT, RELATIVE DENSITY, OR CONSISTENCY, SOIL STRUCTURE, MINERALOGY	COMMENTS DEPTH OF CASING, DRILLING RATE, DRILLING FLUID LOSS, TESTS, AND INSTRUMENTATION. PID (ppm)
	0-4	2.0/4.0	1125	0.0-1.2: Silty SAND w/gravel (SM-GM), gravel is glass shards, flecks of wood and debris, brown processed wood, pale brown (2.5Y 7/3), dry, very dense, fine-medium grain sands, non-plastic, brittle, 15% strong 1.2-2.0: Sandy GRAVEL (GM), very dark gray (5Y 3/1), low plastic, fine-medium grain sands, pebble sized pieces of debris, very soft 2.0-4.0: No Recovery	1.6 1.3
5	4-8	1.3/4.0	1245	4.0-5.3: Silty SAND (SM), greenish gray, red stained wood, fine-medium grain sands, black particles, high silt content, loose, moist, wet 5.3-8.0: No Recovery	2.7 2.9
10				End of Boring at 8' bgs	
15					
20					
25					
30					

PROJECT NUMBER	BORING NUMBER	
439611.01.RI	TR-5TH-SB04	SHEET 1 OF 1

SOIL BORING LOG

PROJECT :	Towers Road Disposal Area Phase I RI	DRILLING CONTRACTOR AND DRILLER :	Parratt Wolff/J. Ellingworth, J. Terry
LOCATION/SITE :	HPDTA Hertford, NC/Background	DRILLING METHOD AND EQUIPMENT USED :	IRA300, HAS 4.25" ID, 4' Macrocore Sampler
DATE :	6/17/2013	WATER LEVEL :	6' bgs
START TIME :	1350	GROUND SURFACE CONDITIONS :	Grass Cover
END TIME :	1420	LOGGER :	T. Stewart/VBO

DEPTH (FT)	SAMPLE INTERVAL (FT)	SAMPLE RECORVERY (FT)	SAMPLE COLLECTION TIME	SOIL DESCRIPTION SOIL NAME, USCS GROUP SYMBOL, COLOR, MOISTURE CONTENT, RELATIVE DENSITY, OR CONSISTENCY, SOIL STRUCTURE, MINERALOGY	COMMENTS DEPTH OF CASING, DRILLING RATE, DRILLING FLUID LOSS, TESTS, AND INSTRUMENTATION. PID (ppm)
	0-4	4.0/4.0	1400	0.0-4.0: Silty SAND (SM), brown, dense-medium dense, dry, trace roots, abundant pebble-sized burnt fragments, glass throughout, strong brown mottling, very fine-fine grain sands	1.1 0.8
5	4-8	4.0/4.0	1420	4.0-5.5: Silty SAND (SM), brown, dense-medium dense, dry, trace roots, abundant pebble-sized burnt fragments, glass throughout, strong brown mottling, very fine-fine grain sands 5.5-8.0: Silt w/sand-silty SAND (SM), light gray and brownish yellow mottled, wet at 6' bgs, very moist throughout, tight pore spaces, very high silt content	5.8 4.9
10				End of Boring at 8' bgs	
15					
20					
25					
30					

PROJECT NUMBER	BORING NUMBER	
439611.01.RI	TR-5TH-SB05	SHEET 1 OF 1

SOIL BORING LOG

PROJECT :	Towers Road Disposal Area Phase I RI	DRILLING CONTRACTOR AND DRILLER :	Parratt Wolff/J. Ellingworth, J. Terry
LOCATION/SITE :	HPDTA Hertford, NC/Background	DRILLING METHOD AND EQUIPMENT USED :	IRA300, HAS 4.25" ID, 4' Macrocore Sampler
DATE :	6/18/2013	WATER LEVEL :	4' bgs
START TIME :	0900	GROUND SURFACE CONDITIONS :	Grass Cover
END TIME :	1200	LOGGER :	T. Stewart/VBO

DEPTH (FT)	SAMPLE INTERVAL (FT)	SAMPLE RECORVERY (FT)	SAMPLE COLLECTION TIME	SOIL DESCRIPTION SOIL NAME, USCS GROUP SYMBOL, COLOR, MOISTURE CONTENT, RELATIVE DENSITY, OR CONSISTENCY, SOIL STRUCTURE, MINERALOGY	COMMENTS DEPTH OF CASING, DRILLING RATE, DRILLING FLUID LOSS, TESTS, AND INSTRUMENTATION. PID (ppm)
	0-4	4.0/4.0	0900	0.0-0.3: Topsoil 0.3-2.0: Silty SAND w/gravel (SM), pale brown to light gray, dry, non-plastic, medium dense-dense, very fine-fine grain sands, up to 15% pebble-sized burnt particles throughout, rubber cores recovered from 2.0-4.0: No Recovery	0.4 0.4
5	4-8	4.0/4.0	1200	4.0-8.0: Silty SAND (SM), greenish gray, wet, fine-medium grain sand, non-low plastic fines, loose	0.8 0.9
10				End of Boring at 8' bgs	
15					
20					
25					
30					

CH2MHILL	PROJECT NUMBER	BORING NUMBER	SHEET 1 OF 1
	439611.01.RI	TR-5TH-SB06	

SOIL BORING LOG

PROJECT :	Towers Road Disposal Area Phase I RI	DRILLING CONTRACTOR AND DRILLER :	Parratt Wolff/J. Ellingworth, J. Terry
LOCATION/SITE :	HPDTA Hertford, NC/Background	DRILLING METHOD AND EQUIPMENT USED :	IRA300, HAS 4.25" ID, 4' Macrocore Sampler
DATE :	6/18/2013	WATER LEVEL :	6' bgs
START TIME :	1200	GROUND SURFACE CONDITIONS :	Grass Cover
END TIME :	1215	LOGGER :	T. Stewart/VBO

DEPTH (FT)	SAMPLE INTERVAL (FT)	SAMPLE RECORVERY (FT)	SAMPLE COLLECTION TIME	SOIL DESCRIPTION SOIL NAME, USCS GROUP SYMBOL, COLOR, MOISTURE CONTENT, RELATIVE DENSITY, OR CONSISTENCY, SOIL STRUCTURE, MINERALOGY	COMMENTS DEPTH OF CASING, DRILLING RATE, DRILLING FLUID LOSS, TESTS, AND INSTRUMENTATION. PID (ppm)
	0-4	4.0/4.0	1210	0.0-4.0: Silty SAND (SM), dark gray-dark grayish brown, dry-moist	1.2 2.1
5	4-8	4.0/4.0	1220	4.0-5.5: CLAY w/sand (CL)/sandy clay (CL), dark greenish gray, moist, plastic, stiff 5.5-8.0: SILT w/sand-silty sand (M-SM), dark greenish gray and greenish gray, wet at 6' bgs, non-plastic, loose, very fine-fine grain sands, mottled yellowish brown	1.5 1.3
10				End of Boring at 8' bgs	
15					
20					
25					
30					

PROJECT NUMBER:	BORING NUMBER: TR-5TH-GW01	SHEET 1 OF 2

SOIL BORING LOG

PROJECT : Tower Road Disposal Areas - Phase II Remedial Investigation

LOCATION : Harvey Point Defense Testing Activity (HPDTA), Hertford, NC

ELEVATION : 5.6 ft NAVD88 (natural ground elevation)

DRILLING CONTRACTOR : Parratt-Wolff Drilling, Inc.\P. Poyner

DRILLING METHOD AND EQUIPMENT : Geoprobe 7822DT, 4 ¼ ID 8 ¾ O.D. HSA, 5 ft Macro Core Sampler

WATER LEVELS : 5.0 ft bgs

START : 1/12/2016

END : 1/12/2016

LOGGER : T. Stewart\VBO

DEPTH BELOW EXISTING GRADE (ft)	INTERVAL (ft)	RECOVERY (in)	SAMPLE ID (TIME)	SOIL DESCRIPTION: SOIL NAME, USCS GROUP SYMBOL, COLOR, MOISTURE CONTENT, RELATIVE DENSITY OR CONSISTENCY, SOIL STRUCTURE, MINERALOGY	SYMBOLLIC LOG	COMMENTS	WELL DIAGRAM
5.6	0.0			**SAND (SP)** 0.0-1.0'- very pale brown, (10YR 7/4), dry, very loose, medium grained, nonplastic			
		2.8	S-1	**SILTY SAND (SM)** 1.0-1.3'- black, moist, loose, very fine to fine grained, low plasticity, roots/bark **CLAY (CL)** 1.3-1.5'- yellowish brown, stiff to very stiff, low to medium plasticity **SAND (SP)** 1.5-1.7'- light gray, wet, loose, medium grained **CLAY WITH SILT (CL)** 1.7-2.8'- light brownish yellow **NO RECOVERY (NR)** 2.8-5.0'			
▽5 0.6	5.0			**CLAY WITH SILT (CL)** 5.0-7.7'- yellowish brown and light greenish gray, (10B 6/1), moist to wet, stiff, nonplastic, high silt content			
		2.7	S-2	**NO RECOVERY (NR)** 7.7-10.0'			
10 -4.4	10.0			**SILTY SAND (SM)** 10.0-12.9'- brownish yellow and light gray, wet, loose to medium dense, medium grained, low plasticity		collected: TR-5TH-GW01-10-14-0116 @1240 for TCL VOCs (8260C)	
		3.9	S-3	**SAND (SP-SM)** 12.9-13.9'- pale brown, (2.5Y 7/3), wet, very loose, nonplastic **NO RECOVERY (NR)** 13.9-15.0'			
15 -9.4	15.0			**SILTY SAND (SM)** 15.0-29.0'- wet, very loose to loose, very fine to medium grained, nonplastic			
		5.0	S-4				

PROJECT NUMBER:	BORING NUMBER: TR-5TH-GW01	SHEET 2 OF 2

SOIL BORING LOG

PROJECT : Tower Road Disposal Areas - Phase II Remedial Investigation

LOCATION : Harvey Point Defense Testing Activity (HPDTA), Hertford, NC

ELEVATION : 5.6 ft NAVD88 (natural ground elevation)

DRILLING CONTRACTOR : Parratt-Wolff Drilling, Inc.\P. Poyner

DRILLING METHOD AND EQUIPMENT : Geoprobe 7822DT, 4 ¼ ID 8 ¾ O.D. HSA, 5 ft Macro Core Sampler

WATER LEVELS : 5.0 ft bgs

START : 1/12/2016

END : 1/12/2016

LOGGER : T. Stewart\VBO

DEPTH BELOW EXISTING GRADE (ft)	INTERVAL (ft)	RECOVERY (in)	SAMPLE ID (TIME)	SOIL DESCRIPTION: SOIL NAME, USCS GROUP SYMBOL, COLOR, MOISTURE CONTENT, RELATIVE DENSITY OR CONSISTENCY, SOIL STRUCTURE, MINERALOGY	SYMBOLLIC LOG	COMMENTS	WELL DIAGRAM
				15.0-20.4'- pale brown, (2.5Y 8/2)			
20 -14.4	20.0						
		5.0	S-5	20.4-23.3'- brownish yellow, (10YR 6/8)			
				23.3-25.0'- light yellowish brown			
25 -19.4	25.0					collected: TR-5TH-GW01-25-29-0116 @1250 for TCL VOCs (8260C)	
		5.0	S-6	25.0-29.0'- pale brown, (2.5Y 7/3)			
30 -24.4	30.0			**CLAY WITH SAND (CL)** 29.0-30.0'- pale brown, (2.5Y 8/2), wet, stiff, very fine to fine grained, nonplastic			
				Bottom of Boring at 30.0 ft bgs on 1/12/2016			

PROJECT NUMBER:	BORING NUMBER: TR-5TH-GW02	SHEET 1 OF 2

SOIL BORING LOG

PROJECT : Tower Road Disposal Areas - Phase II Remedial Investigation

LOCATION : Harvey Point Defense Testing Activity (HPDTA), Hertford, NC

ELEVATION : 6.1 ft NAVD88 (natural ground elevation)

DRILLING CONTRACTOR : Parratt-Wolff Drilling, Inc.\P. Poyner

DRILLING METHOD AND EQUIPMENT : Geoprobe 7822DT, 4 ¼ ID 8 ¾ O.D. HSA, 5 ft Macro Core Sampler

WATER LEVELS : 13.0 ft bgs

START : 1/11/2016

END : 1/12/2016

LOGGER : T. Stewart\VBO

DEPTH BELOW EXISTING GRADE (ft)	INTERVAL (ft)	RECOVERY (in)	SAMPLE ID (TIME)	SOIL DESCRIPTION: SOIL NAME, USCS GROUP SYMBOL, COLOR, MOISTURE CONTENT, RELATIVE DENSITY OR CONSISTENCY, SOIL STRUCTURE, MINERALOGY	SYMBOLLIC LOG	COMMENTS	WELL DIAGRAM
6.1	0.0	2.8	S-1	**CLAY (CL)** 0.0-2.8'- light brownish yellow, (2.5Y 6/3), moist, very soft to soft, low to medium plasticity, trace coarse black organics (<1/2 inch)			
				NO RECOVERY (NR) 2.8-5.0'			
5 1.1	5.0	3.4	S-2	**SILT WITH CLAY (ML)** 5.0-8.4'- greenish gray, (10GY 5/1), moist, soft, low plasticity, trace olive mottling, visible moisture but likely non-productive		collected: TR-5TH-GW02-06-10-0116 @0840 for TCL VOCs (8260C)	
				NO RECOVERY (NR) 8.4-10.0'			
10 -3.9	10.0	4.1	S-3	**SILTY SAND (SM)** 10.0-13.0'- mottled light gray, strong brown and yellowish brown, (10YR 7/3 and 10YR 5/6), moist, dense, fine grained, low plasticity, some clay			
				SAND (SP) 13.0-13.3'- light gray, wet, loose, medium grained, nonplastic fines less than trace			
				SILTY SAND (SM) 13.3-14.1'- light yellowish brown, (10YR 6/4), wet, loose to dense, nonplastic			
15 -8.9	15.0	5.0	S-4	**NO RECOVERY (NR)** 14.1-15.0'			
				SILTY SAND (SM) 15.0-23.0'- pale brown to light gray, wet, very loose to loose, nonplastic			

PROJECT NUMBER:	BORING NUMBER: TR-5TH-GW02	SHEET 2 OF 2

SOIL BORING LOG

PROJECT : Tower Road Disposal Areas - Phase II Remedial Investigation

LOCATION : Harvey Point Defense Testing Activity (HPDTA), Hertford, NC

ELEVATION : 6.1 ft NAVD88 (natural ground elevation)

DRILLING CONTRACTOR : Parratt-Wolff Drilling, Inc.\P. Poyner

DRILLING METHOD AND EQUIPMENT : Geoprobe 7822DT, 4 ¼ ID 8 ¾ O.D. HSA, 5 ft Macro Core Sampler

WATER LEVELS : 13.0 ft bgs

START : 1/11/2016

END : 1/12/2016

LOGGER : T. Stewart\VBO

DEPTH BELOW EXISTING GRADE (ft)	INTERVAL (ft)	RECOVERY (in)	SAMPLE ID (TIME)	SOIL DESCRIPTION: SOIL NAME, USCS GROUP SYMBOL, COLOR, MOISTURE CONTENT, RELATIVE DENSITY OR CONSISTENCY, SOIL STRUCTURE, MINERALOGY	SYMBOLLIC LOG	COMMENTS	WELL DIAGRAM
20 -13.9	20.0						
		5.0	S-5				
				SAND (SP) 23.0-35.0'- light yellowish brown, (10YR 6/4), wet, loose, medium grained, nonplastic, nonplastic fines less than trace			
25 -18.9	25.0					collected: TR-5TH-GW02-25-29-0116 @0830 for TCL VOCs (8260C)	
		5.0	S-6				
30 -23.9	30.0						
		5.0	S-7	33.0-34.5'- laminated with black sands			
35 -28.9	35.0			Bottom of Boring at 35.0 ft bgs on 1/11/2016			

PROJECT NUMBER:	BORING NUMBER: TR-5TH-GW03	SHEET 1 OF 1

SOIL BORING LOG

PROJECT : Tower Road Disposal Areas - Phase II Remedial Investigation

LOCATION : Harvey Point Defense Testing Activity (HPDTA), Hertford, NC

ELEVATION : 5.7 ft NAVD88 (natural ground elevation)

DRILLING CONTRACTOR : Parratt-Wolff Drilling, Inc.\P. Poyner

DRILLING METHOD AND EQUIPMENT : Geoprobe 7822DT, 4 ¼ ID 8 ¾ O.D. HSA, 5 ft Macro Core Sampler

WATER LEVELS : 10.0 ft bgs

START : 1/12/2016

END : 1/12/2016

LOGGER : T. Stewart\VBO

DEPTH BELOW EXISTING GRADE (ft)	INTERVAL (ft)	RECOVERY (in)	SAMPLE ID (TIME)	SOIL DESCRIPTION: SOIL NAME, USCS GROUP SYMBOL, COLOR, MOISTURE CONTENT, RELATIVE DENSITY OR CONSISTENCY, SOIL STRUCTURE, MINERALOGY	SYMBOLLIC LOG	COMMENTS	WELL DIAGRAM
5.7	0.0	2.5	S-1	**CLAY (CL)** 0.0-2.5'- olive gray, (5Y 5/2), moist, low plasticity, silt, grades to greenish gray at 2.3ft bgs **NO RECOVERY (NR)** 2.5-5.0'			
5 0.7	5.0	2.4	S-2	**CLAY WITH SILT (CL)** 5.0-6.3'- greenish gray, (10YR 5/2), moist to dry, low plasticity, trace strong brown mottling **SILT (ML)** 6.3-7.4'- greenish gray, (5G 5/1), dry, dense, nonplastic, clay lense at 7.3-7.4ft bgs **NO RECOVERY (NR)** 7.4-10.0'		unsuccessful attempt to collect sample at 6-10ft bgs, reinstall screen to 10-14ft bgs	
10 -4.3	10.0	3.1	S-3	**CLAYEY SAND (SC)** 10.0-11.0'- mottled strong brown and olive gray, wet, low to medium plasticity **SILTY SAND (SM)** 11.0-13.1'- pale brown and yellowish brown, (10YR 6/3 and 10YR 5/6), wet, loose to dense, medium to fine grained **NO RECOVERY (NR)** 13.1-15.0'		collected: TR-5TH-GW03-10-14-0116 @1025, TR-5TH-GW03D-10-14-0116 @1030 for TCL VOCs (8260C)	
15 -9.3	15.0			Bottom of Boring at 15.0 ft bgs on 1/12/2016			

PROJECT NUMBER:	BORING NUMBER: TR-5TH-GW04	SHEET 1 OF 1

SOIL BORING LOG

PROJECT : Tower Road Disposal Areas - Phase II Remedial Investigation

LOCATION : Harvey Point Defense Testing Activity (HPDTA), Hertford, NC

ELEVATION : 6.6 ft NAVD88 (natural ground elevation)

DRILLING CONTRACTOR : Parratt-Wolff Drilling, Inc.\P. Poyner

DRILLING METHOD AND EQUIPMENT : Geoprobe 7822DT, 4 ¼ ID 8 ¾ O.D. HSA, 5 ft Macro Core Sampler

WATER LEVELS : 5.0 ft bgs

START : 1/12/2016

END : 1/12/2016

LOGGER : T. Stewart\VBO

DEPTH BELOW EXISTING GRADE (ft)	INTERVAL (ft)	RECOVERY (in)	SAMPLE ID (TIME)	SOIL DESCRIPTION: SOIL NAME, USCS GROUP SYMBOL, COLOR, MOISTURE CONTENT, RELATIVE DENSITY OR CONSISTENCY, SOIL STRUCTURE, MINERALOGY	SYMBOLLIC LOG	COMMENTS	WELL DIAGRAM
6.6	0.0			**CLAY (CL)** 0.0-1.9'- olive gray to greenish gray, dry, medium stiff, low to medium plasticity, trace brownish yellow, black pine needles at base			
		3.6	S-1	**SAND (SP-SM)** 1.9-2.2'- pale brown, moist to dry, very loose, nonplastic **CLAY (CL)** 2.2-2.4'- brown, dry, stiff, low plasticity **SAND (SP-SM)** 2.4-2.9'- pale yellow and light gray, moist, very loose, nonplastic **CLAY WITH SILT (CL)** 2.9-3.6'- grayish brown, (10YR 5/2), dry, stiff, low to medium plasticity, trace greenish gray mottling			
▽5 1.6	5.0			**NO RECOVERY (NR)** 3.6-5.0' **SILT WITH CLAY (ML)** 5.0-6.7'- grayish brown, wet, dense, nonplastic		collected: TR-5TH-GW04-06-10-0116 @1400 for TCL VOCs (8260C)	
		1.7	S-2	**NO RECOVERY (NR)** 6.7-10.0'			
10 -3.4	10.0			Bottom of Boring at 10.0 ft bgs on 1/12/2016			

PROJECT NUMBER:	BORING NUMBER: TR-5TH-GW05	SHEET 1 OF 1

SOIL BORING LOG

PROJECT : Tower Road Disposal Areas - Phase II Remedial Investigation

LOCATION : Harvey Point Defense Testing Activity (HPDTA), Hertford, NC

ELEVATION : 6.5 ft NAVD88 (natural ground elevation)

DRILLING CONTRACTOR : Parratt-Wolff Drilling, Inc.\P. Poyner

DRILLING METHOD AND EQUIPMENT : Geoprobe 7822DT, 4 ¼ ID 8 ¾ O.D. HSA, 5 ft Macro Core Sampler

WATER LEVELS : 3.0 ft bgs

START : 1/12/2016

END : 1/12/2016

LOGGER : T. Stewart\VBO

DEPTH BELOW EXISTING GRADE (ft)	INTERVAL (ft)	RECOVERY (in)	SAMPLE ID (TIME)	SOIL DESCRIPTION: SOIL NAME, USCS GROUP SYMBOL, COLOR, MOISTURE CONTENT, RELATIVE DENSITY OR CONSISTENCY, SOIL STRUCTURE, MINERALOGY	SYMBOLLIC LOG	COMMENTS	WELL DIAGRAM
6.5	0.0			**TOPSOIL** 0.0-0.7'- very dark brown			
		3.8	S-1	**CLAY (CL)** 0.7-3.0'- olive gray and brownish yellow, dry to moist, very stiff, nonplastic, with silt			
▽				**SILT WITH CLAY (ML)** 3.0-3.8'- brownish yellow, wet, loose to medium dense, nonplastic, trace very fine sands			
				NO RECOVERY (NR) 3.8-5.0'			
5 1.5	5.0			**SILT WITH SAND (ML)** 5.0-8.8'- brownish yellow, wet, dense, very fine to fine grained, nonplastic, trace light gray mottling		collected: TR-5TH-GW05-06-10-0116 @1635 for TCL VOCs (8260C)	
		3.8	S-2				
				NO RECOVERY (NR) 8.8-10.0'			
10 -3.5	10.0			Bottom of Boring at 10.0 ft bgs on 1/12/2016			

PROJECT NUMBER:	BORING NUMBER: TR-5TH-GW06	SHEET 1 OF 1

SOIL BORING LOG

PROJECT : Tower Road Disposal Areas - Phase II Remedial Investigation

LOCATION : Harvey Point Defense Testing Activity (HPDTA), Hertford, NC

ELEVATION : 6.6 ft NAVD88 (natural ground elevation)

DRILLING CONTRACTOR : Parratt-Wolff Drilling, Inc.\P. Poyner

DRILLING METHOD AND EQUIPMENT : Geoprobe 7822DT, 4 ¼ ID 8 ¾ O.D. HSA, 5 ft Macro Core Sampler

WATER LEVELS : 7.5 ft bgs

START : 1/12/2016

END : 1/12/2016

LOGGER : T. Stewart\VBO

DEPTH BELOW EXISTING GRADE (ft)	INTERVAL (ft)	RECOVERY (in)	SAMPLE ID (TIME)	SOIL DESCRIPTION: SOIL NAME, USCS GROUP SYMBOL, COLOR, MOISTURE CONTENT, RELATIVE DENSITY OR CONSISTENCY, SOIL STRUCTURE, MINERALOGY	SYMBOLLIC LOG	COMMENTS	WELL DIAGRAM
6.6	0.0			**TOPSOIL** 0.0-0.5'- dark brown			
				CLAY (CL) 0.5-2.4'- olive gray and greenish gray, moist to dry, soft, nonplastic, high silt content			
		2.4	S-1	**NO RECOVERY (NR)** 2.4-5.0'			
5 1.6	5.0			**CLAY WITH SILT (CL)** 5.0-7.5'			
		3.5	S-2	**SILT (ML)** 7.5-8.5'- greenish gray, (5G 5/1), wet, loose, nonplastic			
				NO RECOVERY (NR) 8.5-10.0'			
10 -3.4	10.0			**CLAY WITH SILT AND SAND/SILTY SAND (CL)** 10.0-13.2'- dark greenish gray, (10BG 4/1), wet, loose, very fine to fine grained, nonplastic, high silt content		collected: TR-5TH-GW06-10-14-0116 @1455 for TCL VOCs (8260C)	
		3.8	S-3	**SAND (SP-SM)** 13.2-13.8'- light gray to pale brown, (N 7/1), wet, loose, fine to medium grained, nonplastic			
				NO RECOVERY (NR) 13.8-15.0'			
15 -8.4	15.0			Bottom of Boring at 15.0 ft bgs on 1/12/2016			

PROJECT NUMBER:	BORING NUMBER: TR-5TH-GW07	SHEET 1 OF 1

SOIL BORING LOG

PROJECT : Tower Road Disposal Areas - Phase II Remedial Investigation

LOCATION : Harvey Point Defense Testing Activity (HPDTA), Hertford, NC

ELEVATION : 6.9 ft NAVD88 (natural ground elevation)

DRILLING CONTRACTOR : Parratt-Wolff Drilling, Inc.\P. Poyner

DRILLING METHOD AND EQUIPMENT : Geoprobe 7822DT, 4 ¼ ID 8 ¾ O.D. HSA, 5 ft Macro Core Sampler

WATER LEVELS : 5.0 ft bgs

START : 1/12/2016

END : 1/12/2016

LOGGER : T. Stewart\VBO

DEPTH BELOW EXISTING GRADE (ft)	INTERVAL (ft)	RECOVERY (in)	SAMPLE ID (TIME)	SOIL DESCRIPTION: SOIL NAME, USCS GROUP SYMBOL, COLOR, MOISTURE CONTENT, RELATIVE DENSITY OR CONSISTENCY, SOIL STRUCTURE, MINERALOGY	SYMBOLLIC LOG	COMMENTS	WELL DIAGRAM
6.9	0.0			**TOPSOIL** 0.0-0.6'			
		3.1	S-1	**CLAY (CL)** 0.6.3.1'- olive gray and greenish gray, dry to moist, stiff, nonplastic, high silt content			
				NO RECOVERY (NR) 3.1-5.0'			
▽5 1.9	5.0						
		3.8	S-2	**CLAY WITH SILT (CL)** 5.0-8.8'- olive gray grading to yellowish brown, (10YR 5/6), moist to wet, stiff, nonplastic			
				NO RECOVERY (NR) 8.8-10.0'- greenish gray, (5G 5/1), wet, loose, nonplastic			
10 -3.1	10.0						
		4.6	S-3	**CLAY (CL)** 10.0-10.5'- olive gray, moist, very stiff, low to medium plasticity **SILTY SAND (SM)** 10.5-14.6'- yellowish brown and brownish yellow, wet, medium dense, nonplastic		collected: TR-5TH-GW07-10-14-0116 @1545 for TCL VOCs (8260C)	
15 -8.1	15.0			**NO RECOVERY (NR)** 14.6-15.0' Bottom of Boring at 15.0 ft bgs on 1/12/2016			

PROJECT NUMBER:	BORING NUMBER: TR-5TH-GW08	SHEET 1 OF 2

SOIL BORING LOG

PROJECT : Tower Road Disposal Areas - Phase II Remedial Investigation

LOCATION : Harvey Point Defense Testing Activity (HPDTA), Hertford, NC

ELEVATION : 6.4 ft NAVD88 (natural ground elevation)

DRILLING CONTRACTOR : Parratt-Wolff Drilling, Inc.\P. Poyner

DRILLING METHOD AND EQUIPMENT : Geoprobe 7822DT, 4 ¼ ID 8 ¾ O.D. HSA, 5 ft Macro Core Sampler

WATER LEVELS : 10.0 ft bgs

START : 1/13/2016

END : 1/13/2016

LOGGER : T. Stewart\VBO

DEPTH BELOW EXISTING GRADE (ft)	INTERVAL (ft)	RECOVERY (in)	SAMPLE ID (TIME)	SOIL DESCRIPTION: SOIL NAME, USCS GROUP SYMBOL, COLOR, MOISTURE CONTENT, RELATIVE DENSITY OR CONSISTENCY, SOIL STRUCTURE, MINERALOGY	SYMBOLLIC LOG	COMMENTS	WELL DIAGRAM
6.4	0.0			**TOPSOIL** 0.0-0.4'			
		3.0	S-1	**CLAY (CL)** 0.4-3.0'- light yellowish brown and dark greenish gray, moist to dry, soft, nonplastic, some silt			
				NO RECOVERY (NR) 3.0-5.0'			
5 / 1.4	5.0						
		2.2	S-2	**CLAY WITH SILT AND SAND (CL)** 5.0-7.2'- light yellowish brown and light greenish gray, moist to wet, soft, nonplastic, wet in pockets (<3 inches)			
				NO RECOVERY (NR) 7.2-10.0'			
10 / -3.7	10.0						
		4.5	S-3	**SILTY SAND (SM)** 10.0-14.5'- mottled yellowish brown and light gray, (10YR 5/6 and N 7/1), wet, trace clay lense at 12.6ft bgs, weakly cemented medium grain strong brown sands at 13.10-13.2ft bgs, medium-coarse sands at 13.2-14.5ft bgs		collected: TR-5TH-GW09-10-14-0116 @1000 for TCL VOCs (8260C)	
				NO RECOVERY (NR) 14.5-15.0'			
15 / -8.7	15.0						
		5.0	S-4	**SILTY SAND (SM)** 15.0-30.0'- wet, fine to medium grained, nonplastic, clay stringers 15.0-20.0'- light gray to very pale brown, (2.5YR 7/2-3)			

PROJECT NUMBER:	BORING NUMBER: TR-5TH-GW08	SHEET 2 OF 2

SOIL BORING LOG

PROJECT : Tower Road Disposal Areas - Phase II Remedial Investigation

LOCATION : Harvey Point Defense Testing Activity (HPDTA), Hertford, NC

ELEVATION : 6.4 ft NAVD88 (natural ground elevation)

DRILLING CONTRACTOR : Parratt-Wolff Drilling, Inc.\P. Poyner

DRILLING METHOD AND EQUIPMENT : Geoprobe 7822DT, 4 ¼ ID 8 ¾ O.D. HSA, 5 ft Macro Core Sampler

WATER LEVELS : 10.0 ft bgs

START : 1/13/2016

END : 1/13/2016

LOGGER : T. Stewart\VBO

DEPTH BELOW EXISTING GRADE (ft)	INTERVAL (ft)	RECOVERY (in)	SAMPLE ID (TIME)	SOIL DESCRIPTION: SOIL NAME, USCS GROUP SYMBOL, COLOR, MOISTURE CONTENT, RELATIVE DENSITY OR CONSISTENCY, SOIL STRUCTURE, MINERALOGY	SYMBOLLIC LOG	COMMENTS	WELL DIAGRAM
20 -13.7	20.0						
		5.0	S-5	20.0-25.0'- brownish yellow, (10YR 6/6)			
25 -18.7	25.0						
		5.0	S-6	25.0-30.0'- light gray to very pale brown, (2.5YR 7/2-3)		collected: TR-5TH-GW09-25-29-0116 @1055, and TR-5TH-GW09D-25-29-0116 @1100 for TCL VOCs (8260C)	
30 -23.7	30.0			Bottom of Boring at 30.0 ft bgs on 1/13/2016			

PROJECT NUMBER:	BORING NUMBER: TR-5TH-GW09	SHEET 1 OF 1

SOIL BORING LOG

PROJECT : Tower Road Disposal Areas - Phase II Remedial Investigation

LOCATION : Harvey Point Defense Testing Activity (HPDTA), Hertford, NC

ELEVATION : 7.2 ft NAVD88 (natural ground elevation)

DRILLING CONTRACTOR : Parratt-Wolff Drilling, Inc.\P. Poyner

DRILLING METHOD AND EQUIPMENT : Geoprobe 7822DT, 4 ¼ ID 8 ¾ O.D. HSA, 5 ft Macro Core Sampler

WATER LEVELS : 5.0 ft bgs

START : 1/13/2016

END : 1/13/2016

LOGGER : T. Stewart\VBO

DEPTH BELOW EXISTING GRADE (ft)	INTERVAL (ft)	RECOVERY (in)	SAMPLE ID (TIME)	SOIL DESCRIPTION: SOIL NAME, USCS GROUP SYMBOL, COLOR, MOISTURE CONTENT, RELATIVE DENSITY OR CONSISTENCY, SOIL STRUCTURE, MINERALOGY	SYMBOLLIC LOG	COMMENTS	WELL DIAGRAM
7.2	0.0			**TOPSOIL** 0.0-0.3'- dark brown **CLAY (CL)** 0.3-1.8'- olive gray and greenish gray, moist to dry, soft, nonplastic, high silt content			
		1.8	S-1	**NO RECOVERY (NR)** 1.8-5.0'		collected: TR-5TH-GW09-04-08-0116 @0830 for TCL VOCs (8260C)	
▽5 2.2	5.0			**SILTY SAND (SM)** 5.0-6.8'- wet, dense, very fine grained, high silt content 5.0-5.6'- olive gray 5.6-6.8'- greenish gray, (10BG 6/1), wet, fine to medium grained, nonplastic			
		4.0	S-2	**CLAY WITH SILT (CL)** 6.8-9.0'- light yellowish brown, (10YR 6/4), wet to moist, stiff, nonplastic			
				NO RECOVERY (NR) 9.0-10.0'			
10 -2.8	10.0			Bottom of Boring at 10.0 ft bgs on 1/13/2016			

PROJECT NUMBER:	BORING NUMBER: TR-5TH-GW10	SHEET 1 OF 1

SOIL BORING LOG

PROJECT : Tower Road Disposal Areas - Phase II Remedial Investigation

LOCATION : Harvey Point Defense Testing Activity (HPDTA), Hertford, NC

ELEVATION : 7.7 ft NAVD88 (natural ground elevation)

DRILLING CONTRACTOR : Parratt-Wolff Drilling, Inc.\P. Poyner

DRILLING METHOD AND EQUIPMENT : Geoprobe 7822DT, 4 ¼ ID 8 ¾ O.D. HSA, 5 ft Macro Core Sampler

WATER LEVELS : 11.3 ft bgs

START : 1/13/2016

END : 1/13/2016

LOGGER : T. Stewart\VBO

DEPTH BELOW EXISTING GRADE (ft)	INTERVAL (ft)	RECOVERY (in)	SAMPLE ID (TIME)	SOIL DESCRIPTION: SOIL NAME, USCS GROUP SYMBOL, COLOR, MOISTURE CONTENT, RELATIVE DENSITY OR CONSISTENCY, SOIL STRUCTURE, MINERALOGY	SYMBOLLIC LOG	COMMENTS	WELL DIAGRAM
7.7	0.0			**TOPSOIL** 0.0-0.5'			
				SILTY SAND (SM) 0.5-2.0'- greenish gray and light yellowish brown, (2.5Y 6/3), dry, loose to medium dense, few rootlets and black organics			
		4.4	S-1	**CLAY (CL)** 2.0-3.8'- brown, (7.5YR 4/2), dry, very stiff, high plasticity			
				CLAY WITH SILT (CL) 3.8-4.4'- light bluish gray, (5PB 8/1), moist to wet, low to non plasticity			
5 2.7	5.0			**NO RECOVERY (NR)** 4.4-5.0'			
				CLAY WITH SILT (CL) 5.0-9.0'- moist, soft, low plasticity, greenish gray (5GY 5/1) from 5.0-6.2ft, light yellowish brown (10YR 6/4) and light bluish gray (5PB 7/1) mottling vertically, wet in pockets			
		4.0	S-2				
				NO RECOVERY (NR) 9.0-10.0'			
10 -2.3	10.0			**CLAY WITH SILT (CL)** 10.0-11.3'- brownish yellow, (10YR 6/6), moist, stiff to medium stiff, loose, fine to medium grained, nonplastic		collected: TR-5TH-GW10-10-14-0116 @1445 for TCL VOCs (8260C)	
				SILTY SAND (SM) 11.3-14.2'- brownish yellow, (10YR 6/6), wet, dense, medium grained, strong brown banding at 13.7-13.9ft bgs			
		4.2	S-3				
				NO RECOVERY (NR) 14.2-15.0'			
15 -7.3	15.0			Bottom of Boring at 15.0 ft bgs on 1/13/2016			

PROJECT NUMBER:	BORING NUMBER: TR-5TH-GW11	SHEET 1 OF 2

SOIL BORING LOG

PROJECT : Tower Road Disposal Areas - Phase II Remedial Investigation

LOCATION : Harvey Point Defense Testing Activity (HPDTA), Hertford, NC

ELEVATION : 7.1 ft NAVD88 (natural ground elevation)

DRILLING CONTRACTOR : Parratt-Wolff Drilling, Inc.\P. Poyner

DRILLING METHOD AND EQUIPMENT : Geoprobe 7822DT, 4 ¼ ID 8 ¾ O.D. HSA, 5 ft Macro Core Sampler

WATER LEVELS : 10.6 ft bgs

START : 1/13/2016

END : 1/14/2016

LOGGER : T. Stewart\VBO

DEPTH BELOW EXISTING GRADE (ft)	INTERVAL (ft)	RECOVERY (in)	SAMPLE ID (TIME)	SOIL DESCRIPTION: SOIL NAME, USCS GROUP SYMBOL, COLOR, MOISTURE CONTENT, RELATIVE DENSITY OR CONSISTENCY, SOIL STRUCTURE, MINERALOGY	SYMBOLLIC LOG	COMMENTS	WELL DIAGRAM
7.1	0.0	3.5	S-1	**CLAY (CL)** 0.0-3.1'- olive gray, moist to dry, very stiff, nonplastic			
				CLAY WITH SILT (CL) 3.1-3.5'- olive gray and greenish gray, moist, soft to medium stiff **NO RECOVERY (NR)** 3.5-5.0'			
5 2.1	5.0	2.2	S-2	**CLAY WITH SILT (CL)** 5.0-7.2'- mottled light gray, greenish gray, light yellowish brown, moist, medium stiff, nonplastic, wet in pockets, trace coarse limestone gravel at 5.3-5.5ft **NO RECOVERY (NR)** 7.2-10.0'			
10 -2.9	10.0	5.0	S-3	**CLAY WITH SILT (CL)** 10.0-10.6'- light yellowish brown, moist, medium stiff, nonplastic, trace light gray mottling **SILTY SAND (SM)** 10.6-14.7'- light yellowish brown, wet, medium grained, nonplastic, mottled 40% strong brown, trace coarse sands		collected: TR-5TH-GW11-10-14-0116 @0830 for TCL VOCs (8260C)	
15 -7.9	15.0	5.0	S-4	**SILTY SAND (SM)** 14.7-30.0'- light gray			

PROJECT NUMBER:	BORING NUMBER: TR-5TH-GW11	SHEET 2 OF 2

SOIL BORING LOG

PROJECT : Tower Road Disposal Areas - Phase II Remedial Investigation

LOCATION : Harvey Point Defense Testing Activity (HPDTA), Hertford, NC

ELEVATION : 7.1 ft NAVD88 (natural ground elevation)

DRILLING CONTRACTOR : Parratt-Wolff Drilling, Inc.\P. Poyner

DRILLING METHOD AND EQUIPMENT : Geoprobe 7822DT, 4 ¼ ID 8 ¾ O.D. HSA, 5 ft Macro Core Sampler

WATER LEVELS : 10.6 ft bgs

START : 1/13/2016

END : 1/14/2016

LOGGER : T. Stewart\VBO

DEPTH BELOW EXISTING GRADE (ft)	INTERVAL (ft)	RECOVERY (in)	SAMPLE ID (TIME)	SOIL DESCRIPTION: SOIL NAME, USCS GROUP SYMBOL, COLOR, MOISTURE CONTENT, RELATIVE DENSITY OR CONSISTENCY, SOIL STRUCTURE, MINERALOGY	SYMBOLLIC LOG	COMMENTS	WELL DIAGRAM
20 -12.9	20.0			19.5-25.0'- yellowish brown discoloration			
		5.0	S-5				
25 -17.9	25.0					collected: TR-5TH-GW11-25-29-0116 @1645 for TCL VOCs (8260C)	
		5.0	S-6	27.5-29.5'- clay lenses up to 3 inches thick			
30 -22.9	30.0			Bottom of Boring at 30.0 ft bgs on 1/13/2016			

PROJECT NUMBER:	BORING NUMBER: TR-5TH-GW12	SHEET 1 OF 2

SOIL BORING LOG

PROJECT : Tower Road Disposal Areas - Phase II Remedial Investigation

LOCATION : Harvey Point Defense Testing Activity (HPDTA), Hertford, NC

ELEVATION : 6.4 ft NAVD88 (natural ground elevation)

DRILLING CONTRACTOR : Parratt-Wolff Drilling, Inc.\P. Poyner

DRILLING METHOD AND EQUIPMENT : Geoprobe 7822DT, 4 ¼ ID 8 ¾ O.D. HSA, 5 ft Macro Core Sampler

WATER LEVELS : 10.6 ft bgs

START : 1/14/2014

END : 2/4/2016

LOGGER : T. Stewart\VBO

DEPTH BELOW EXISTING GRADE (ft)	INTERVAL (ft)	RECOVERY (in)	SAMPLE ID (TIME)	SOIL DESCRIPTION: SOIL NAME, USCS GROUP SYMBOL, COLOR, MOISTURE CONTENT, RELATIVE DENSITY OR CONSISTENCY, SOIL STRUCTURE, MINERALOGY	SYMBOLLIC LOG	COMMENTS	WELL DIAGRAM
6.4	0.0			**TOPSOIL** 0.0-0.4'			
				SAND (SP) 0.4-1.5'- white, (10YR 8/1), dry, very loose, nonplastic			
		1.5	S-1	**NO RECOVERY (NR)** 1.5-5.0'			
5 / 1.4	5.0						
		4.3	S-2	**CLAY (CL)** 5.0-9.3'- light olive gray, (5Y 7/1), moist, soft to medium stiff, low to non plasticity, mottled 25% yellowish brown			
				NO RECOVERY (NR) 9.3-10.0'			
10 / -3.6	10.0						
		3.2	S-3	**SILTY SAND (SM)** 10.0-13.2'- yellowish brown, (10YR 5/8), moist, loose to medium dense, nonplastic to low plasticity, wet at 10.6ft bgs, clayey over first 6-8 inches, coarser to medium sands from 12.2-13.2ft bgs		collected: TR-5TH-GW12-10-14-0116 @0830 for TCL VOCs (8260C)	
				NO RECOVERY (NR) 13.2-15.0'			
15 / -8.6	15.0			**NOT LOGGED FOR LITHOLOGY**			

PROJECT NUMBER:	BORING NUMBER: TR-5TH-GW12	SHEET 2 OF 2

SOIL BORING LOG

PROJECT : Tower Road Disposal Areas - Phase II Remedial Investigation

LOCATION : Harvey Point Defense Testing Activity (HPDTA), Hertford, NC

ELEVATION : 6.4 ft NAVD88 (natural ground elevation)

DRILLING CONTRACTOR : Parratt-Wolff Drilling, Inc.\P. Poyner

DRILLING METHOD AND EQUIPMENT : Geoprobe 7822DT, 4 ¼ ID 8 ¾ O.D. HSA, 5 ft Macro Core Sampler

WATER LEVELS : 10.6 ft bgs

START : 1/14/2014

END : 2/4/2016

LOGGER : T. Stewart\VBO

DEPTH BELOW EXISTING GRADE (ft)	INTERVAL (ft)	RECOVERY (in)	SAMPLE ID (TIME)	SOIL DESCRIPTION: SOIL NAME, USCS GROUP SYMBOL, COLOR, MOISTURE CONTENT, RELATIVE DENSITY OR CONSISTENCY, SOIL STRUCTURE, MINERALOGY	SYMBOLLIC LOG	COMMENTS	WELL DIAGRAM
20 -13.6							
		0.0					
25 -18.6						collected: TR-5TH-GW12-25-29-0216 @0840 for TCL VOCs (8260C)	
30 -23.6	30.0			Bottom of Boring at 30.0 ft bgs on 1/14/2014			

PROJECT NUMBER:	BORING NUMBER: TR-5TH-GW13	SHEET 1 OF 2

SOIL BORING LOG

PROJECT : Tower Road Disposal Areas - Phase II Remedial Investigation

LOCATION : Harvey Point Defense Testing Activity (HPDTA), Hertford, NC

ELEVATION : 5.9 ft NAVD88 (natural ground elevation)

DRILLING CONTRACTOR : Parratt-Wolff Drilling, Inc.\P. Poyner

DRILLING METHOD AND EQUIPMENT : Geoprobe 7822DT, 4 ¼ ID 8 ¾ O.D. HSA, 5 ft Macro Core Sampler

WATER LEVELS : 5.0 ft bgs

START : 1/14/2016

END : 1/14/2016

LOGGER : T. Stewart\VBO

DEPTH BELOW EXISTING GRADE (ft)	INTERVAL (ft)	RECOVERY (in)	SAMPLE ID (TIME)	SOIL DESCRIPTION: SOIL NAME, USCS GROUP SYMBOL, COLOR, MOISTURE CONTENT, RELATIVE DENSITY OR CONSISTENCY, SOIL STRUCTURE, MINERALOGY	SYMBOLLIC LOG	COMMENTS	WELL DIAGRAM
5.9	0.0			**TOPSOIL** 0.0-0.8'			
		4.5	S-1	**CLAY (CL)** 0.8-4.5'- pale brown to light yellowish brown, (2.5Y 6/3), moist to dry, very stiff, nonplastic, mottled 40% strong brown, grades to soft at 4.0ft bgs, trace roots at 2.5ft, micas			
▽5	5.0			**NO RECOVERY (NR)** 4.5-5.0'			
0.9		3.5	S-2	**SILT WITH SAND (ML)** 5.0-8.5'- light yellowish brown, wet, loose, very fine grained, nonplastic, mottled 40% light gray		collected: TR-5TH-GW13-05-09-0116 @1115 for TCL VOCs (8260C)	
				NO RECOVERY (NR) 8.5-10.0'			
10 -4.1	10.0	3.9	S-3	**SILTY SAND (SM)** 10.0-13.9'- wet, very loose to loose, fine to coarse grained, nonplastic, light bluish gray from 10.0-12.0ft, light yellowish brown from 12.0-13.2ft, pale brown 13.2-13.9ft, strong brown discolored sands at 12.3ft bgs			
				NO RECOVERY (NR) 13.9-15.0'			
15 -9.1	15.0			**SILTY SAND (SM)** 15.0-25.0'- light gray, wet, very loose, very fine to medium grained, nonplastic, discolored strong brown from 20.0-23.5ft bgs			

PROJECT NUMBER:	BORING NUMBER: TR-5TH-GW13	SHEET 2 OF 2

SOIL BORING LOG

PROJECT : Tower Road Disposal Areas - Phase II Remedial Investigation

LOCATION : Harvey Point Defense Testing Activity (HPDTA), Hertford, NC

ELEVATION : 5.9 ft NAVD88 (natural ground elevation)

DRILLING CONTRACTOR : Parratt-Wolff Drilling, Inc.\P. Poyner

DRILLING METHOD AND EQUIPMENT : Geoprobe 7822DT, 4 ¼ ID 8 ¾ O.D. HSA, 5 ft Macro Core Sampler

WATER LEVELS : 5.0 ft bgs

START : 1/14/2016

END : 1/14/2016

LOGGER : T. Stewart\VBO

DEPTH BELOW EXISTING GRADE (ft)	INTERVAL (ft)	RECOVERY (in)	SAMPLE ID (TIME)	SOIL DESCRIPTION: SOIL NAME, USCS GROUP SYMBOL, COLOR, MOISTURE CONTENT, RELATIVE DENSITY OR CONSISTENCY, SOIL STRUCTURE, MINERALOGY	SYMBOLLIC LOG	COMMENTS	WELL DIAGRAM
20 -14.1							
25 -19.1				**NO RECOVERY (NR)** 25.0-30.0'		collected: TR-5TH-GW13-25-29-0216 @1120 for TCL VOCs (8260C)	
30 -24.1				Bottom of Boring at 30.0 ft bgs on 1/14/2016			

PROJECT NUMBER:	BORING NUMBER: TR-5TH-GW14	SHEET 1 OF 2

SOIL BORING LOG

PROJECT : Tower Road Disposal Areas - Phase II Remedial Investigation

LOCATION : Harvey Point Defense Testing Activity (HPDTA), Hertford, NC

ELEVATION : 6.8 ft NAVD88 (natural ground elevation)

DRILLING CONTRACTOR : Parratt-Wolff Drilling, Inc.\P. Poyner

DRILLING METHOD AND EQUIPMENT : Geoprobe 7822DT, 4 ¼ ID 8 ¾ O.D. HSA, 5 ft Macro Core Sampler

WATER LEVELS : 10.6 ft bgs

START : 1/14/2016

END : 2/4/2016

LOGGER : T. Stewart\VBO

DEPTH BELOW EXISTING GRADE (ft)	INTERVAL (ft)	RECOVERY (in)	SAMPLE ID (TIME)	SOIL DESCRIPTION: SOIL NAME, USCS GROUP SYMBOL, COLOR, MOISTURE CONTENT, RELATIVE DENSITY OR CONSISTENCY, SOIL STRUCTURE, MINERALOGY	SYMBOLLIC LOG	COMMENTS	WELL DIAGRAM
6.8	0.0			**TOPSOIL** 0.0-0.5'			
		3.5	S-1	**CLAY (CL)** 0.5-3.5'- light yellowish brown, dry to moist, nonplastic, mottled strong brown and light gray, moist at 3.0ft, very stiff from 0.5-2.0ft, soft from 2.0-3.5ft, increased silt content at 2.5ft bgs			
				NO RECOVERY (NR) 3.5-5.0'			
5 1.8	5.0			**CLAY WITH SILT (CL)** 5.0-8.2'- light yellowish brown, wet, very soft, nonplastic, nonproductive interval for sampling			
		4.3	S-2				
				CLAY (CL) 8.2-9.3'- pale brown, moist, medium stiff, nonplastic to low plasticity, trace silt			
				NO RECOVERY (NR) 9.3-10.0'			
10 -3.2	10.0			**CLAY (CL)** 10.0-10.6'- Same as 8.2-9.3		collected: TR-5TH-GW14-10-14-0116 @1300 for TCL VOCs (8260C)	
		4.4	S-3	**SILTY SAND (SM)** 10.6-14.4'- brownish yellow and pale brown, wet, loose to medium dense, medium grained			
				NO RECOVERY (NR) 14.4-15.0'			
15 -8.2	15.0			**NOT LOGGED FOR LITHOLOGY**			

PROJECT NUMBER:	BORING NUMBER: TR-5TH-GW14	SHEET 2 OF 2

SOIL BORING LOG

PROJECT : Tower Road Disposal Areas - Phase II Remedial Investigation LOCATION : Harvey Point Defense Testing Activity (HPDTA), Hertford, NC

ELEVATION : 6.8 ft NAVD88 (natural ground elevation) DRILLING CONTRACTOR : Parratt-Wolff Drilling, Inc.\P. Poyner

DRILLING METHOD AND EQUIPMENT : Geoprobe 7822DT, 4 ¼ ID 8 ¾ O.D. HSA, 5 ft Macro Core Sampler

WATER LEVELS : 10.6 ft bgs START : 1/14/2016 END : 2/4/2016 LOGGER : T. Stewart\VBO

DEPTH BELOW EXISTING GRADE (ft)	INTERVAL (ft)	RECOVERY (in)	SAMPLE ID (TIME)	SOIL DESCRIPTION: SOIL NAME, USCS GROUP SYMBOL, COLOR, MOISTURE CONTENT, RELATIVE DENSITY OR CONSISTENCY, SOIL STRUCTURE, MINERALOGY	SYMBOLLIC LOG	COMMENTS	WELL DIAGRAM
20 -13.2							
		0.0					
25 -18.2						collected: TR-5TH-GW14-25-29-0216 @0940 for TCL VOCs (8260C)	
30 -23.2	30.0			Bottom of Boring at 30.0 ft bgs on 1/14/2016			

PROJECT NUMBER:	BORING NUMBER: TR-5TH-GW15	SHEET 1 OF 1

SOIL BORING LOG

PROJECT : Tower Road Disposal Areas - Phase II Remedial Investigation

LOCATION : Harvey Point Defense Testing Activity (HPDTA), Hertford, NC

ELEVATION : 6.5 ft NAVD88 (natural ground elevation)

DRILLING CONTRACTOR : Parratt-Wolff Drilling, Inc.\P. Poyner

DRILLING METHOD AND EQUIPMENT : Geoprobe 7822DT, 4 ¼ ID 8 ¾ O.D. HSA, 5 ft Macro Core Sampler

WATER LEVELS : 5.0 ft bgs

START : 1/13/2016

END : 1/13/2016

LOGGER : T. Stewart\VBO

DEPTH BELOW EXISTING GRADE (ft)	INTERVAL (ft)	RECOVERY (in)	SAMPLE ID (TIME)	SOIL DESCRIPTION: SOIL NAME, USCS GROUP SYMBOL, COLOR, MOISTURE CONTENT, RELATIVE DENSITY OR CONSISTENCY, SOIL STRUCTURE, MINERALOGY	SYMBOLLIC LOG	COMMENTS	WELL DIAGRAM
6.5	0.0	3.0	S-1	**CLAY (CL)** 0.0-4.3'- brown, dry, very stiff to hard, nonplastic, 20% strong brown mottling			
5 1.5	5.0	3.0	S-2	**CLAY WITH SILT (CL)** 4.3-5.0'- brown, moist, nonplastic to low plasticity, wet at 5.0ft bgs, some very fine sand **CLAY WITH SILT (CL)** 5.0-6.6'- brown, moist to wet, soft, nonplastic, trace very fine to fine grain sands, trace yellowish brown discoloration **NO RECOVERY (NR)** 6.6-10.0'		collected: TR-5TH-GW15-08-12-0116 @1220 for TCL VOCs (8260C)	
10 -3.5	10.0	3.0	S-3	**SILTY SAND (SM)** 10.0-14.2'- brown to pale brown, wet, loose, medium to fine grained, nonplastic, coarser sands at 13.8-14.2ft bgs **NO RECOVERY (NR)** 14.2-15.0'			
15 -8.5	15.0			Bottom of Boring at 15.0 ft bgs on 1/13/2016			

PROJECT NUMBER:	BORING NUMBER: TR-5TH-GW16	SHEET 1 OF 1

SOIL BORING LOG

PROJECT : Tower Road Disposal Areas - Phase II Remedial Investigation

LOCATION : Harvey Point Defense Testing Activity (HPDTA), Hertford, NC

ELEVATION : 7.2 ft NAVD88 (natural ground elevation)

DRILLING CONTRACTOR : Parratt-Wolff Drilling, Inc.\P. Poyner

DRILLING METHOD AND EQUIPMENT : Geoprobe 7822DT, 4 ¼ ID 8 ¾ O.D. HSA, 5 ft Macro Core Sampler

WATER LEVELS : 5.0 ft bgs

START : 1/13/2016

END : 1/13/2016

LOGGER : T. Stewart\VBO

DEPTH BELOW EXISTING GRADE (ft)	INTERVAL (ft)	RECOVERY (in)	SAMPLE ID (TIME)	SOIL DESCRIPTION: SOIL NAME, USCS GROUP SYMBOL, COLOR, MOISTURE CONTENT, RELATIVE DENSITY OR CONSISTENCY, SOIL STRUCTURE, MINERALOGY	SYMBOLLIC LOG	COMMENTS	WELL DIAGRAM
7.2	0.0	2.9	S-1	**CLAY (CL)** 0.0-2.9'- greenish gray and olive gray, dry, very stiff, nonplastic to low plasticity, moist at 2.5-2.8ft bgs, few wood fragments			
				NO RECOVERY (NR) 2.9-5.0'- olive gray and greenish gray, moist to dry, soft, nonplastic, high silt content			
▽5 2.2	5.0	1.4	S-2	**CLAY WITH SILT AND SAND (CL)** 5.0-6.4'- greenish gray and light yellowish brown, moist to wet, soft, nonplastic, larger (>1 inch) brown wood fragments to 5%		collected: TR-5TH-GW16-05-09-0116 @1340 for TCL VOCs (8260C)	
				NO RECOVERY (NR) 6.4-10.0'			
10 -2.8	10.0			Bottom of Boring at 10.0 ft bgs on 1/13/2016			

PROJECT NUMBER:	BORING NUMBER: TR-5TH-GW17	SHEET 1 OF 2

SOIL BORING LOG

PROJECT : Tower Road Disposal Areas - Phase II Remedial Investigation

LOCATION : Harvey Point Defense Testing Activity (HPDTA), Hertford, NC

ELEVATION : 7.1 ft NAVD88 (natural ground elevation)

DRILLING CONTRACTOR : Parratt-Wolff Drilling, Inc.\P. Poyner

DRILLING METHOD AND EQUIPMENT : Geoprobe 7822DT, 4 ¼ ID 8 ¾ O.D. HSA, 5 ft Macro Core Sampler

WATER LEVELS : 13.8 ft bgs

START : 2/3/2016

END : 2/3/2016

LOGGER : T. Stewart\VBO

DEPTH BELOW EXISTING GRADE (ft)	INTERVAL (ft)	RECOVERY (in)	SAMPLE ID (TIME)	SOIL DESCRIPTION: SOIL NAME, USCS GROUP SYMBOL, COLOR, MOISTURE CONTENT, RELATIVE DENSITY OR CONSISTENCY, SOIL STRUCTURE, MINERALOGY	SYMBOLLIC LOG	COMMENTS	WELL DIAGRAM
7.1	0.0			**TOPSOIL** 0.0-0.3'			
		5.0	S-1	**CLAY (CL)** 0.3-5.0'- brown and yellowish brown, dry, stiff to very stiff, nonplastic, roots to 1.5ft bgs, silt content increase at 4.5-5.0ft bgs			
5 / 2.1	5.0						
		5.0	S-2	**CLAY WITH SILT/SILT (CL-ML)** 5.0-11.0'- mottled light greenish gray and yellowish brown, moist, soft, nonplastic, wet at 6-8ft bgs, 20% strong brown mottling, likely perched water nonproductive for sampling			
10 / -2.9	10.0						
		4.3	S-3	**SILTY SAND (SM)** 11.0-14.3'- brownish yellow, moist, dense, medium grained, wet at 13.8-14.3ft bgs, 10% strong brown mottling, Clayey Sand (SC) lense from 11.0-11.4ft bgs			
				NO RECOVERY (NR) 14.3-15.0'			
15 / -7.9	15.0			**SILTY SAND (SM)** 15.0-30.0'- light gray, wet, very loose to loose, medium grained, nonplastic, trace coarse sands			
		5.0	S-4				

PROJECT NUMBER:	BORING NUMBER: TR-5TH-GW17	SHEET 2 OF 2

SOIL BORING LOG

PROJECT : Tower Road Disposal Areas - Phase II Remedial Investigation

LOCATION : Harvey Point Defense Testing Activity (HPDTA), Hertford, NC

ELEVATION : 7.1 ft NAVD88 (natural ground elevation)

DRILLING CONTRACTOR : Parratt-Wolff Drilling, Inc.\P. Poyner

DRILLING METHOD AND EQUIPMENT : Geoprobe 7822DT, 4 ¼ ID 8 ¾ O.D. HSA, 5 ft Macro Core Sampler

WATER LEVELS : 13.8 ft bgs

START : 2/3/2016

END : 2/3/2016

LOGGER : T. Stewart\VBO

DEPTH BELOW EXISTING GRADE (ft)	INTERVAL (ft)	RECOVERY (in)	SAMPLE ID (TIME)	SOIL DESCRIPTION: SOIL NAME, USCS GROUP SYMBOL, COLOR, MOISTURE CONTENT, RELATIVE DENSITY OR CONSISTENCY, SOIL STRUCTURE, MINERALOGY	SYMBOLLIC LOG	COMMENTS	WELL DIAGRAM
20 -12.9	20.0						
		5.0	S-5	20.0-26.0'- yellowish brown discoloration			
25 -17.9	25.0						
		5.0	S-6	26.0-27.0'- trace clay lenses <1/4 inch thick 28.0-30.0'- dark gray laminations		collected: TR-5TH-GW17-25-29-0216 @1430 for TCL VOCs (8260C)	
30 -22.9	30.0			Bottom of Boring at 30.0 ft bgs on 2/3/2016			

Well Completion Diagrams

PROJECT NUMBER	WELL NUMBER	
439611.01.RI	HPDTA-BG-MW01	SHEET 1 OF 1

WELL COMPLETION DIAGRAM

PROJECT : Towers Road Disposal Area LOCATION : HPDTA, Hertford NC DATE: 6/12/2013

DRILLING CONTRACTOR : Parratt Wolff/ J. Ellingworth

DRILLING METHOD AND EQUIPMENT USED : 4.25" Hollow Stem Auger/Truck Mounted Drill Rig (IRA-300)

WATER LEVEL : 5.34' BTOC NORTHING: 866867.00 EASTING: 2788309.60 LOGGER : T. Stewart/VBO

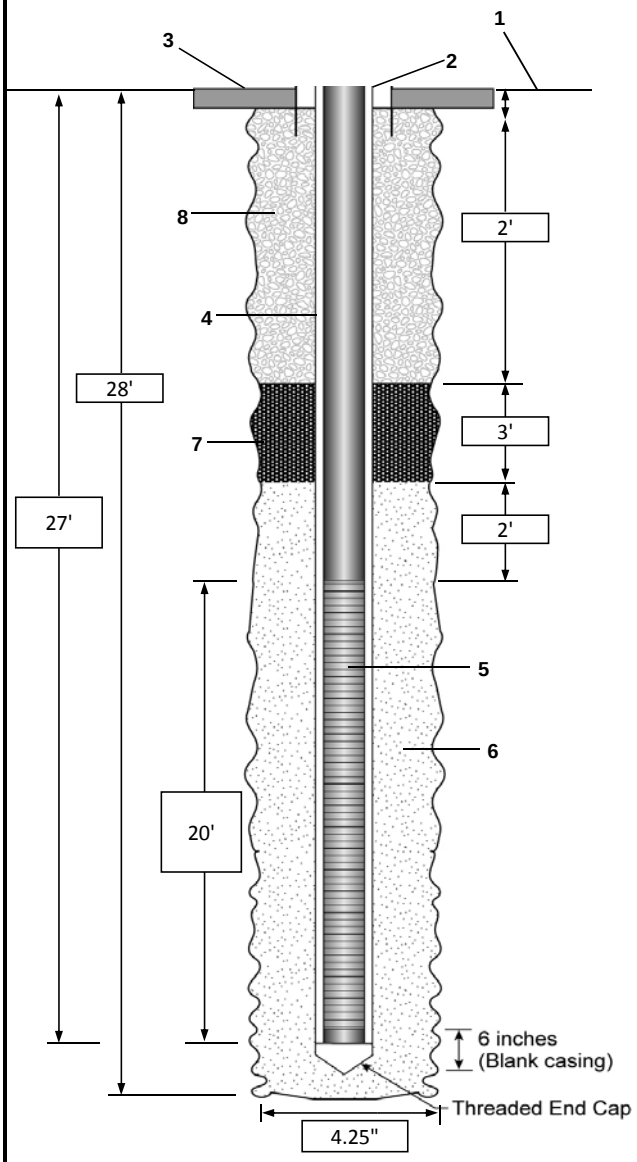

1- Ground elevation at well	6.93' amsl
2- Top of casing elevation	6.62' amsl
3- Wellhead protection cover type	8" Flushmount
a) concrete pad dimensions	24" Diameter Circle
4- Dia./type of well casing	2" Diameter PVC
5- Screen slot size	0.010" Machine Slotted
6- Type filter pack	#1 Sand
a) Quantity used	12 50-lb Bags
7- Type of seal	Sodiume Bentonite
a) Quantity used	1 50-lb Bag
8- Grout	
a) Grout mix used	Portland Cement
b) Method of placement	Tremie Pipe
Development method	Surge and Pump

Comments:

Purged 60 gallons of water during development.

PROJECT NUMBER	WELL NUMBER	
439611.01.RI	HPDTA-BG-MW02	SHEET 1 OF 1

WELL COMPLETION DIAGRAM

PROJECT : Towers Road Disposal Area LOCATION : HPDTA, Hertford NC DATE: 6/13/2013

DRILLING CONTRACTOR : Parratt Wolff/ J. Ellingworth

DRILLING METHOD AND EQUIPMENT USED : 4.25" Hollow Stem Auger/Truck Mounted Drill Rig (IRA-300)

WATER LEVEL : 4.83' BTOC NORTHING: 867840.11 EASTING: 2787247.22 LOGGER : T. Stewart/VBO

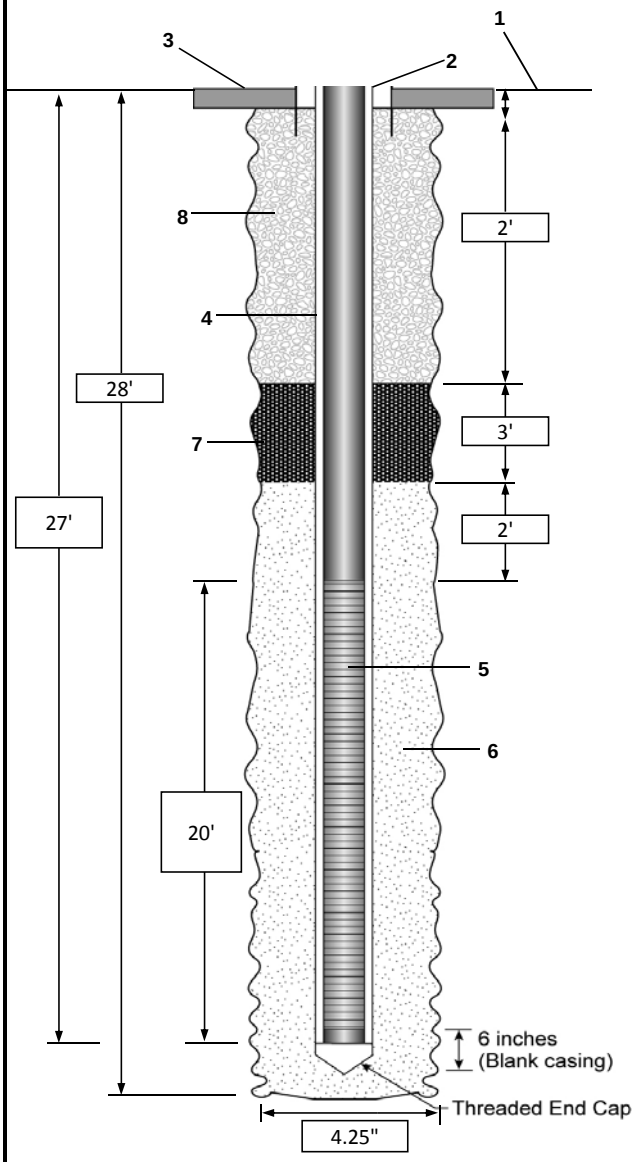

1- Ground elevation at well	6.06' amsl (top of well)
2- Top of casing elevation	5.68' amsl
3- Wellhead protection cover type	8" Flushmount
a) concrete pad dimensions	24" Diameter Circle
4- Dia./type of well casing	2" Diameter PVC
5- Screen slot size	0.010" Machine Slotted
6- Type filter pack	#1 Sand
a) Quantity used	12 50-lb Bags
7- Type of seal	Sodiume Bentonite
a) Quantity used	1 50-lb Bag
8- Grout	
a) Grout mix used	Portland Cement
b) Method of placement	Tremie Pipe
Development method	Surge and Pump

Comments:

Purged 78 gallons of water during development.

PROJECT NUMBER	WELL NUMBER	
439611.01.RI	HPDTA-BG-MW03	SHEET 1 OF 1

WELL COMPLETION DIAGRAM

PROJECT : Towers Road Disposal Area LOCATION : HPDTA, Hertford NC DATE: 6/14/2013

DRILLING CONTRACTOR : Parratt Wolff/ J. Ellingworth

DRILLING METHOD AND EQUIPMENT USED : 4.25" Hollow Stem Auger/Truck Mounted Drill Rig (IRA-300)

WATER LEVEL : 4.82' BTOC NORTHING: 866665.64 EASTING: 2786754.44 LOGGER : T. Stewart/VBO

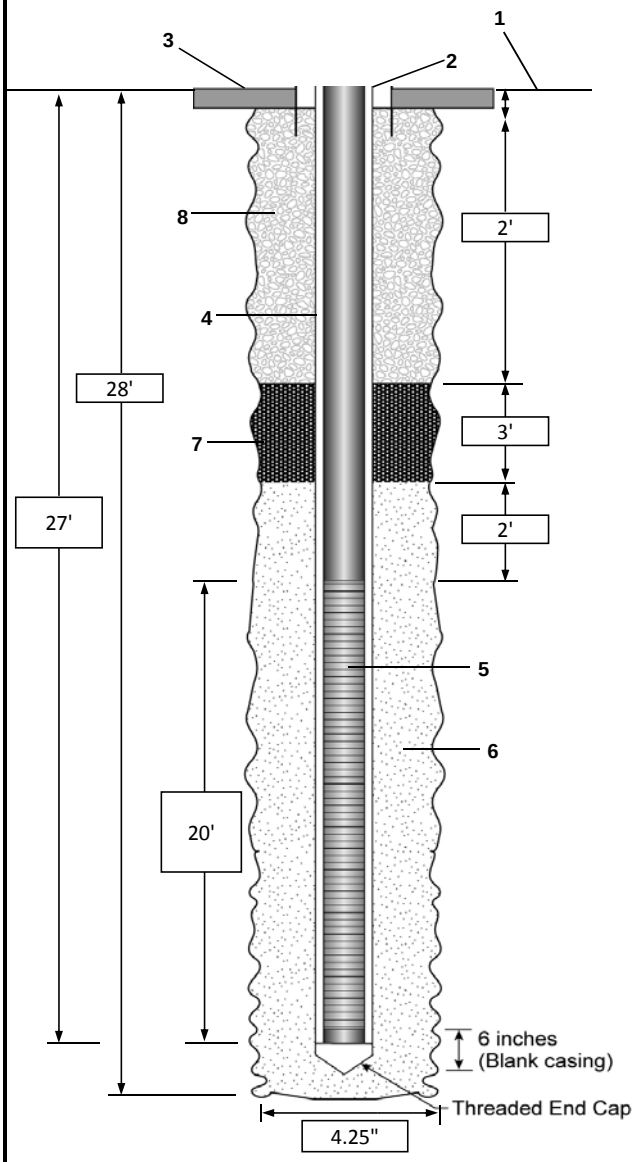

1- Ground elevation at well	6.30' amsl
2- Top of casing elevation	6.08' amsl
3- Wellhead protection cover type	8" Flushmount
a) concrete pad dimensions	24" Diameter Circle
4- Dia./type of well casing	2" Diameter PVC
5- Screen slot size	0.010" Machine Slotted
6- Type filter pack	#1 Sand
a) Quantity used	12 50-lb Bags
7- Type of seal	Sodiume Bentonite
a) Quantity used	1 50-lb Bag
8- Grout	
a) Grout mix used	Portland Cement
b) Method of placement	Tremie Pipe
Development method	Surge and Pump

Comments:

Purged 54 gallons of water during development.

PROJECT NUMBER	WELL NUMBER	
439611.01.RI	HPDTA-BG-MW04	SHEET 1 OF 1

WELL COMPLETION DIAGRAM

PROJECT : Towers Road Disposal Area LOCATION : HPDTA, Hertford NC DATE: 6/14/2013

DRILLING CONTRACTOR : Parratt Wolff/ J. Ellingworth

DRILLING METHOD AND EQUIPMENT USED : 4.25" Hollow Stem Auger/Truck Mounted Drill Rig (IRA-300)

WATER LEVEL : 4.62' BTOC NORTHING: 866381.07 EASTING: 2787624.29 LOGGER : T. Stewart/VBO

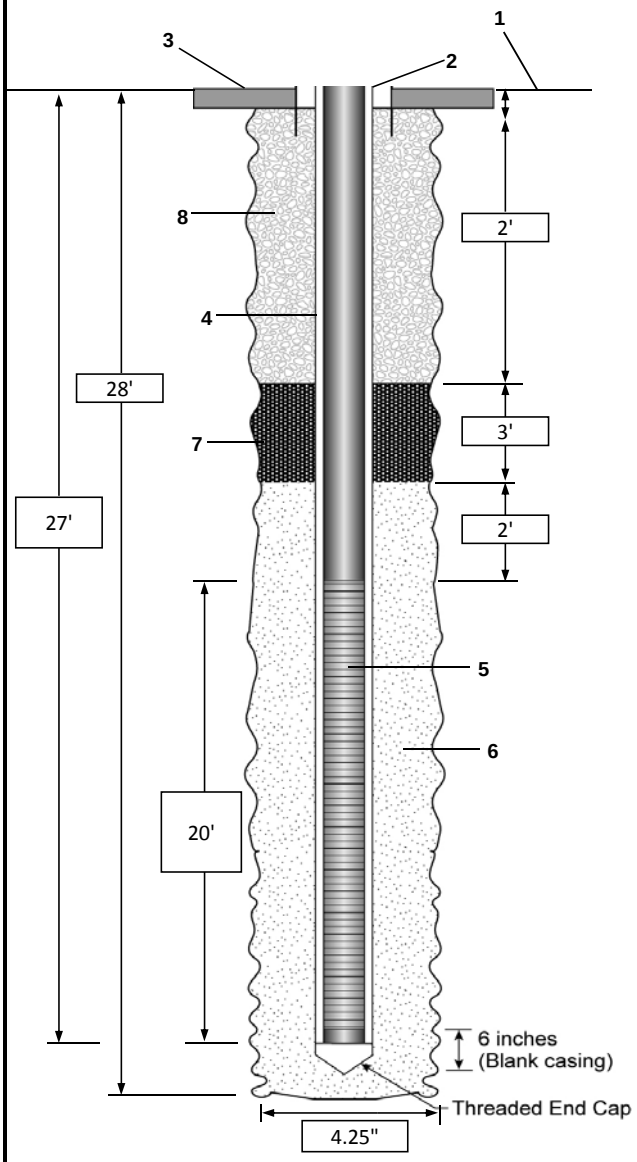

1- Ground elevation at well	6.29' amsl
2- Top of casing elevation	5.92' amsl
3- Wellhead protection cover type	8" Flushmount
a) concrete pad dimensions	24" Diameter Circle
4- Dia./type of well casing	2" Diameter PVC
5- Screen slot size	0.010" Machine Slotted
6- Type filter pack	#1 Sand
a) Quantity used	12 50-lb Bags
7- Type of seal	Sodiume Bentonite
a) Quantity used	1 50-lb Bag
8- Grout	
a) Grout mix used	Portland Cement
b) Method of placement	Tremie Pipe
Development method	Surge and Pump

Comments:

Purged 54 gallons of water during development.

PROJECT NUMBER	WELL NUMBER	
439611.01.RI	TR-2ND-MW01	SHEET 1 OF 1

WELL COMPLETION DIAGRAM

PROJECT : Towers Road Disposal Area LOCATION : HPDTA, Hertford NC DATE: 6/11/2013

DRILLING CONTRACTOR : Parratt Wolff/ J. Ellingworth

DRILLING METHOD AND EQUIPMENT USED : 4.25" Hollow Stem Auger/Truck Mounted Drill Rig (IRA-300)

WATER LEVEL : 5.10' Below Top of Casing (BTOC) NORTHING: 867530.12 EASTING: 2787183.62 LOGGER: T. Stewart/VBO

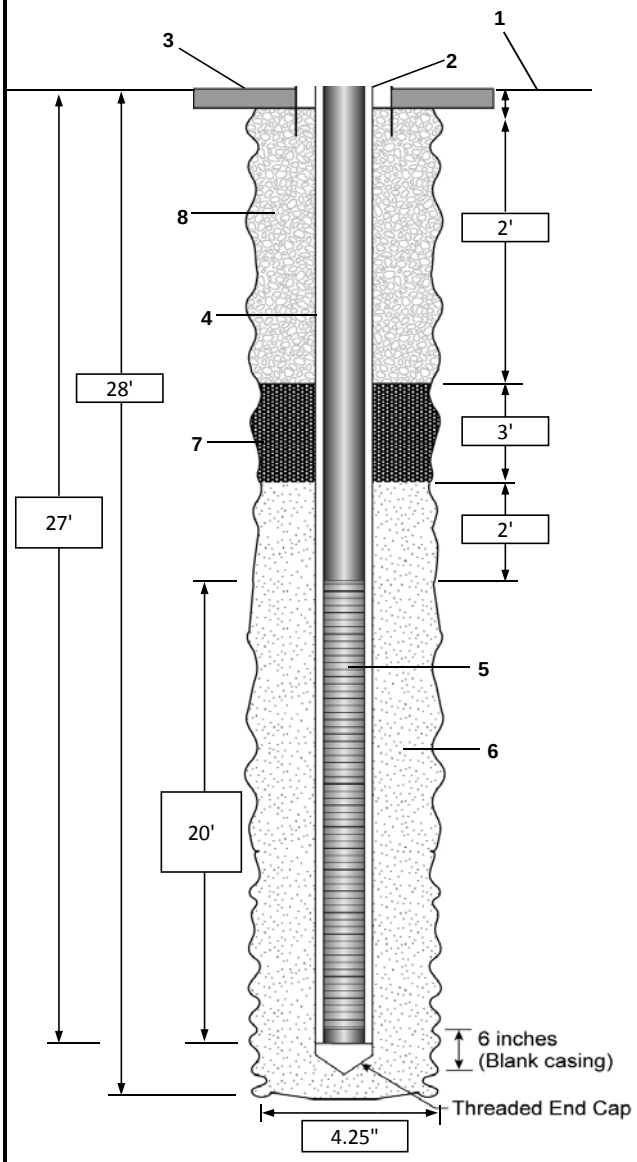

1- Ground elevation at well	6.29' above mean sea level (amsl)
2- Top of casing elevation	6.14' amsl
3- Wellhead protection cover type	8" Flushmount
a) concrete pad dimensions	24" Diameter Circle
4- Dia./type of well casing	2" Diameter PVC
5- Screen slot size	0.010" Machine Slotted
6- Type filter pack	#1 Sand
a) Quantity used	12 50-lb Bags
7- Type of seal	Sodiume Bentonite
a) Quantity used	1 50-lb Bag
8- Grout	
a) Grout mix used	Portland Cement
b) Method of placement	Tremie Pipe
Development method	Surge and Pump

Comments:

Purged 48 gallons of water during development.

PROJECT NUMBER	WELL NUMBER	
439611.01.RI	TR-2ND-MW02	SHEET 1 OF 1

WELL COMPLETION DIAGRAM

PROJECT : Towers Road Disposal Area LOCATION : HPDTA, Hertford NC DATE: 6/11/2013

DRILLING CONTRACTOR : Parratt Wolff/ J. Ellingworth

DRILLING METHOD AND EQUIPMENT USED : 4.25" Hollow Stem Auger/Truck Mounted Drill Rig (IRA-300)

WATER LEVEL : 4.66' BTOC NORTHING: 867497.18 EASTING: 2787097.60 LOGGER : T. Stewart/VBO

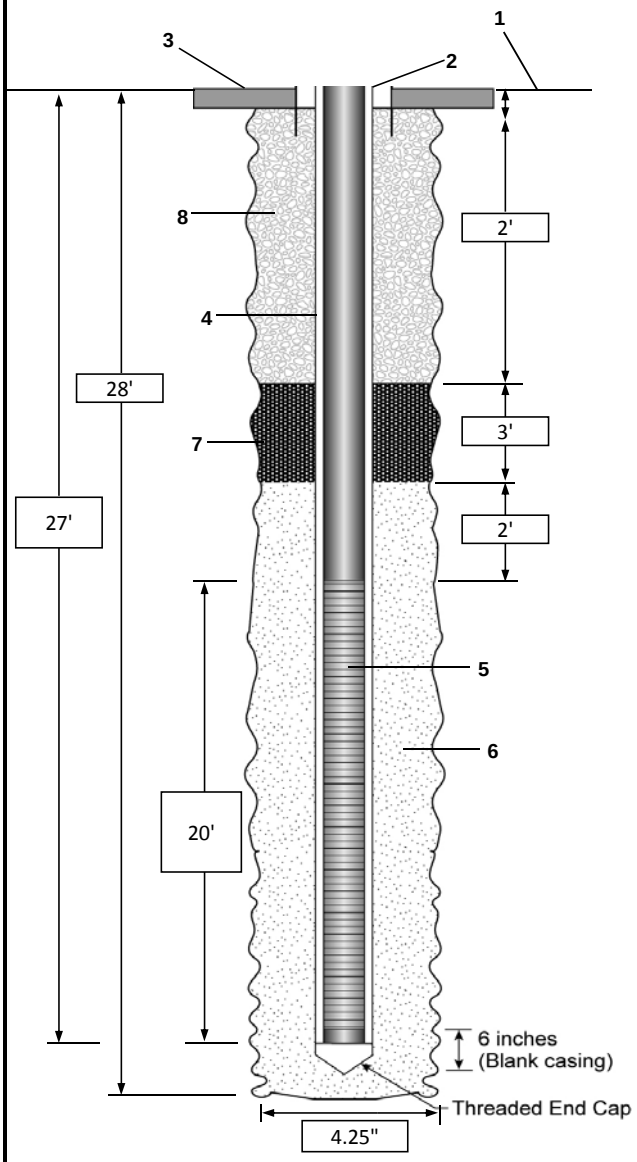

1- Ground elevation at well	6.06' amsl
2- Top of casing elevation	5.76' amsl
3- Wellhead protection cover type	8" Flushmount
a) concrete pad dimensions	24" Diameter Circle
4- Dia./type of well casing	2" Diameter PVC
5- Screen slot size	0.010" Machine Slotted
6- Type filter pack	#1 Sand
a) Quantity used	12 50-lb Bags
7- Type of seal	Sodiume Bentonite
a) Quantity used	1 50-lb Bag
8- Grout	
a) Grout mix used	Portland Cement
b) Method of placement	Tremie Pipe
Development method	Surge and Pump

Comments:

Purged 42 gallons of water during development.

PROJECT NUMBER	WELL NUMBER	
439611.03.02	TR-2ND-MW03	SHEET 1 OF 1

WELL COMPLETION DIAGRAM

PROJECT: Tower Road Disposal Areas - Phase II Remedial Investigation LOCATION : Harvey Point Defense Testing Activity, Hertford, NC (867462.91 N, 2787030.83 E)

DRILLING CONTRACTOR: Parratt Wolff

DRILLING METHOD AND EQUIPMENT USED: Geoprobe 7822DT, 4 1/2 ID 8 3/4 OD HAS, 5 ft Macro Core Sampler

WATER LEVELS: NA START: 1/28/2016 END: 1/28/2016 LOGGER: T. Stewart/VBO

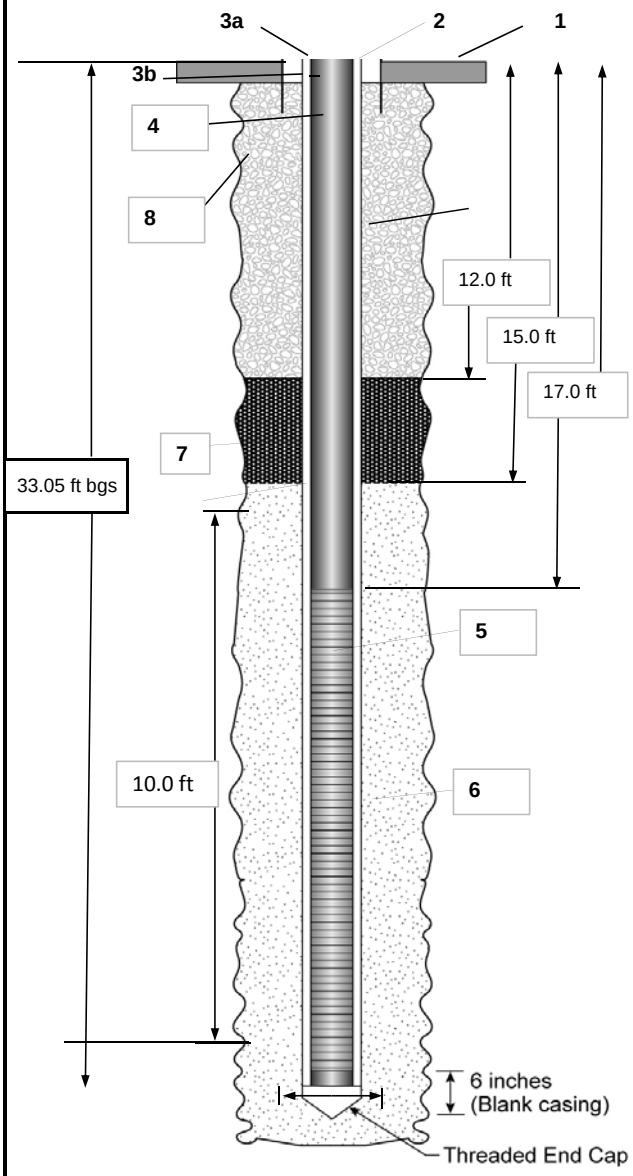

1-	Ground elevation at well	5.96 ft
2-	Top of casing elevation	5.9 ft
	a) vent hole?	No
3-	Wellhead protection cover type	6 inch diameter steel cover
	a) weep hole?	No
	b) concrete pad dimensions	3 ft diameter
4-	Dia./type of well casing	2-inch/PVC
		Silver-Line® EnviroPure
5-	Type/slot size of screen	PVC/0.01slot
		Silver-Line® EnviroPure
6-	Type screen filter	sand pack
	a) Quantity used	5 - 50lb bags
7-	Type of seal	Enviroplug® tablets (3/8") and Medium Chip
	a) Quantity used	1 - 50lb bag
8-	Grout	
	a) Grout mix used	Portland Type I/II
	b) Method of placement	gravity feed
	c) Vol. of well casing grout	~14 gallons
	Development method	submersible pump (whale pump)
	Development time	35 min.
	Estimated purge volume	60 gallons

Comments

PROJECT NUMBER	WELL NUMBER	
439611.03.02	TR-2ND-MW04	SHEET 1 OF 1

WELL COMPLETION DIAGRAM

PROJECT: Tower Road Disposal Areas - Phase II Remedial Investigation LOCATION : Harvey Point Defense Testing Activity, Hertford, NC (867428.43 N, 2787118.95 E)

DRILLING CONTRACTOR: Parratt Wolff

DRILLING METHOD AND EQUIPMENT USED: Geoprobe 7822DT, 4 1/2 ID 8 3/4 OD HAS, 5 ft Macro Core Sampler

WATER LEVELS: NA START: 1/29/2016 END: 1/29/2016 LOGGER: T. Stewart/VBO

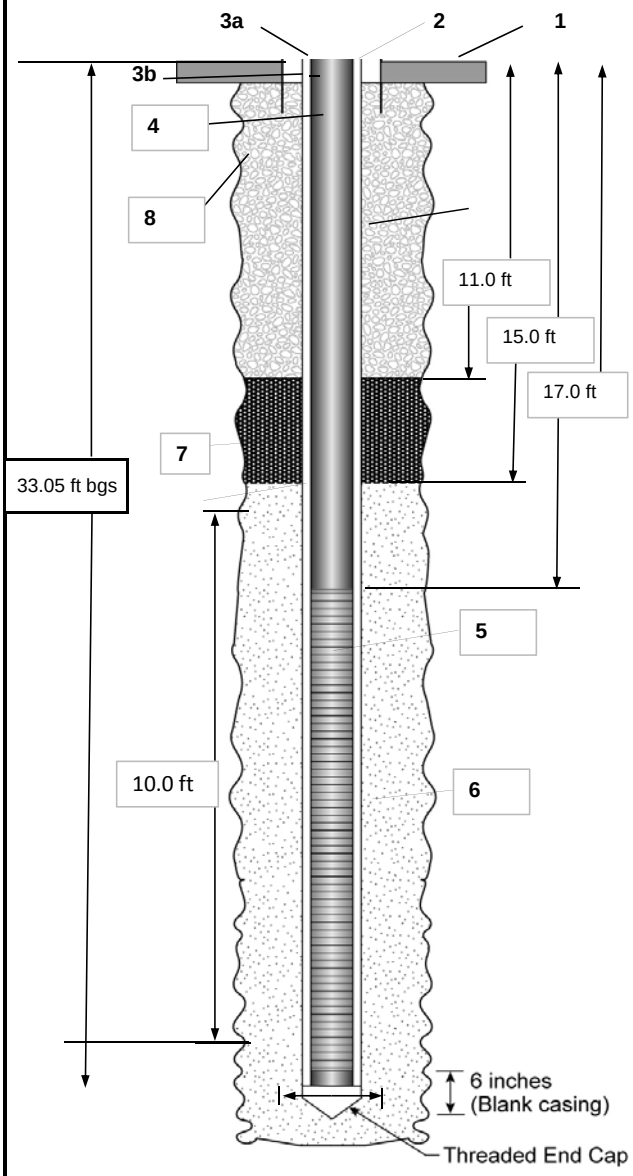

1-	Ground elevation at well	6.34 ft
2-	Top of casing elevation	6.24 ft
	a) vent hole?	No
3-	Wellhead protection cover type	6 inch diameter steel cover
	a) weep hole?	No
	b) concrete pad dimensions	3 ft diameter
4-	Dia./type of well casing	2-inch/PVC
		Silver-Line® EnviroPure
5-	Type/slot size of screen	PVC/0.01slot
		Silver-Line® EnviroPure
6-	Type screen filter	sand pack
	a) Quantity used	5.5 - 50lb bags
7-	Type of seal	Enviroplug® tablets (3/8") and Medium Chip
	a) Quantity used	1 - 50lb bag
8-	Grout	
	a) Grout mix used	Portland Type I/II
	b) Method of placement	gravity feed
	c) Vol. of well casing grout	~14 gallons
	Development method	submersible pump (whale pump)
	Development time	75 min.
	Estimated purge volume	120 gallons

Comments

PROJECT NUMBER	WELL NUMBER	
439611.03.02	TR-2ND-MW05	SHEET 1 OF 1

WELL COMPLETION DIAGRAM

PROJECT: Tower Road Disposal Areas - Phase II Remedial Investigatic LOCATION : Harvey Point Defense Testing Activity, Hertford, NC (867514.26 N, 2787222.86 E)

DRILLING CONTRACTOR: Parratt Wolff

DRILLING METHOD AND EQUIPMENT USED: Geoprobe 7822DT, 4 1/2 ID 8 3/4 OD HAS, 5 ft Macro Core Sampler

WATER LEVELS: NA START: 2/1/2016 END: 2/1/2016 LOGGER: T. Stewart/VBO

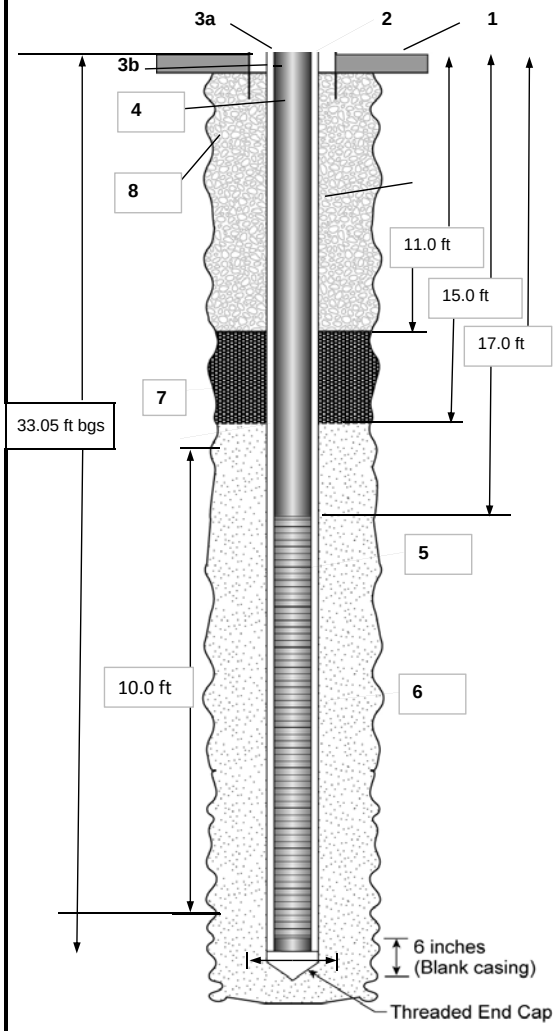

1- Ground elevation at well	5.17 ft
2- Top of casing elevation	5.03 ft
a) vent hole?	No
3- Wellhead protection cover type	6 inch diameter steel cover
a) weep hole?	No
b) concrete pad dimensions	3 ft diameter
4- Dia./type of well casing	2-inch/PVC
	Silver-Line® EnviroPure
5- Type/slot size of screen	PVC/0.01slot
	Silver-Line® EnviroPure
6- Type screen filter	sand pack
a) Quantity used	5.5 - 50lb bags
7- Type of seal	Enviroplug® tablets (3/8") and Medium Chip
a) Quantity used	1 - 50lb bag
8- Grout	
a) Grout mix used	Portland Type I/II
b) Method of placement	gravity feed
c) Vol. of well casing grout	~14 gallons
Development method	submersible pump (whale pump)
Development time	61 min.
Estimated purge volume	92 gallons

Comments

PROJECT NUMBER	WELL NUMBER	
439611.03.02	TR-2ND-MW06	SHEET 1 OF 1

WELL COMPLETION DIAGRAM

PROJECT: Tower Road Disposal Areas - Phase II Remedial Investigatic LOCATION : Harvey Point Defense Testing Activity, Hertford, NC (867433.43 N, 2787242.97 E)

DRILLING CONTRACTOR: Parratt Wolff

DRILLING METHOD AND EQUIPMENT USED: Geoprobe 7822DT, 4 1/2 ID 8 3/4 OD HAS, 5 ft Macro Core Sampler

WATER LEVELS: NA START: 2/2/2016 END: 2/2/2016 LOGGER: T. Stewart/VBO

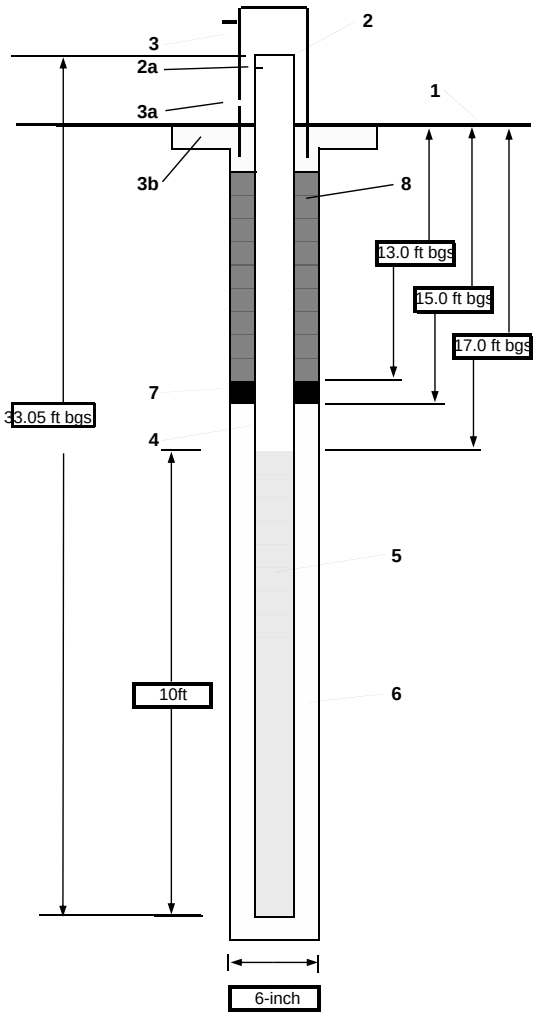

1- Ground elevation at well	6.36 ft
2- Top of casing elevation	9.39 ft
a) vent hole?	No
3- Wellhead protection cover type	4-inch square, steel casing
a) weep hole?	No
b) concrete pad dimensions	3ft diameter
4- Dia./type of well casing	2-inch/PVC
	Silver-Line® EnviroPure
5- Type/slot size of screen	PVC/0.01slot
	Silver-Line® EnviroPure
6- Type screen filter	sand pack
a) Quantity used	5.5 - 50lb bags
7- Type of seal	Enviroplug® tablets (3/8") and Medium Chip
a) Quantity used	1 - 50lb bag
8- Grout	
a) Grout mix used	Portland Type I/II
b) Method of placement	gravity feed
c) Vol. of well casing grout	~17 gallons
Development method	submersible pump (whale pump)
Development time	36 min.
Estimated purge volume	60 gallons

Comments

PROJECT NUMBER	WELL NUMBER	
439611.03.02	TR-2ND-MW07	SHEET 1 OF 1

WELL COMPLETION DIAGRAM

PROJECT: Tower Road Disposal Areas - Phase II Remedial Investigatic LOCATION : Harvey Point Defense Testing Activity, Hertford, NC (867646.2 N, 2787151.99 E)

DRILLING CONTRACTOR: Parratt Wolff

DRILLING METHOD AND EQUIPMENT USED: Geoprobe 7822DT, 4 1/2 ID 8 3/4 OD HAS, 5 ft Macro Core Sampler

WATER LEVELS: NA START: 2/2/2016 END: 2/2/2016 LOGGER: T. Stewart/VBO

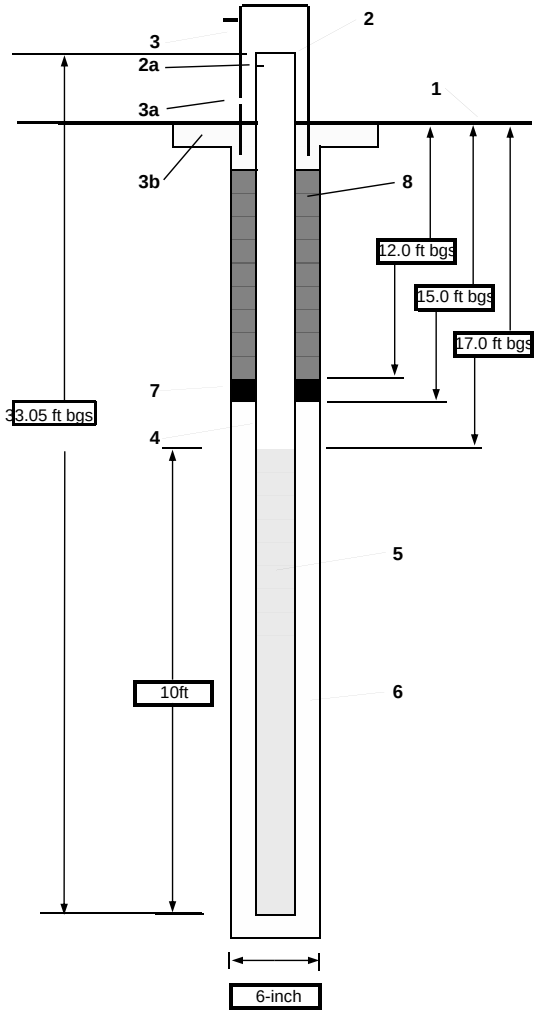

1-	Ground elevation at well	6.18 ft
2-	Top of casing elevation	9.03 ft
	a) vent hole?	No
3-	Wellhead protection cover type	4-inch square, steel casing
	a) weep hole?	No
	b) concrete pad dimensions	3ft diameter
4-	Dia./type of well casing	2-inch/PVC
		Silver-Line® EnviroPure
5-	Type/slot size of screen	PVC/0.01slot
		Silver-Line® EnviroPure
6-	Type screen filter	sand pack
	a) Quantity used	5.5 - 50lb bags
7-	Type of seal	Enviroplug® tablets (3/8") and Medium Chip
	a) Quantity used	1 - 50lb bag
8-	Grout	
	a) Grout mix used	Portland Type I/II
	b) Method of placement	gravity feed
	c) Vol. of well casing grout	~16 gallons
	Development method	submersible pump (monsoon)
	Development time	135 min.
	Estimated purge volume	100 gallons

Comments

PROJECT NUMBER	WELL NUMBER	
439611.01.RI	TR-5TH-MW01	SHEET 1 OF 1

WELL COMPLETION DIAGRAM

PROJECT : Towers Road Disposal Area LOCATION : HPDTA, Hertford NC DATE: 6/12/2013

DRILLING CONTRACTOR : Parratt Wolff/ J. Ellingworth

DRILLING METHOD AND EQUIPMENT USED : 4.25" Hollow Stem Auger/Truck Mounted Drill Rig (IRA-300)

WATER LEVEL : 5.42' BTOC NORTHING: 867102.48 EASTING: 2788448.03 LOGGER : T. Stewart/VBO

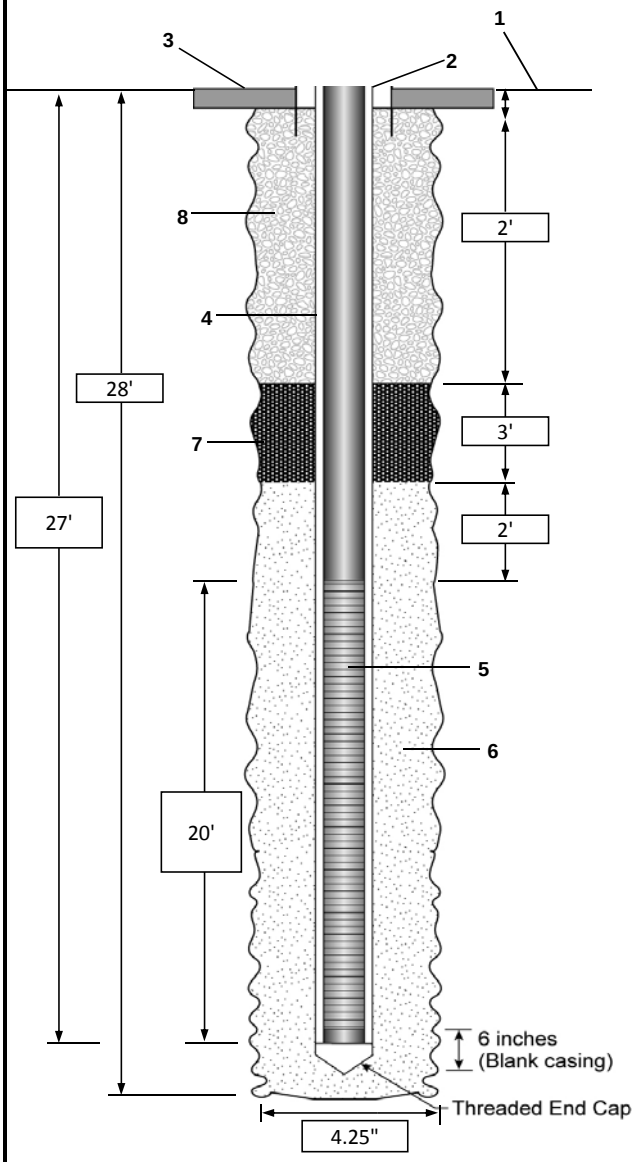

1- Ground elevation at well	6.94' amsl
2- Top of casing elevation	6.78' amsl
3- Wellhead protection cover type	8" Flushmount
a) concrete pad dimensions	24" Diameter Circle
4- Dia./type of well casing	2" Diameter PVC
5- Screen slot size	0.010" Machine Slotted
6- Type filter pack	#1 Sand
a) Quantity used	12 50-lb Bags
7- Type of seal	Sodiume Bentonite
a) Quantity used	1 50-lb Bag
8- Grout	
a) Grout mix used	Portland Cement
b) Method of placement	Tremie Pipe
Development method	Surge and Pump

Comments:

Purged 55 gallons of water during development.

PROJECT NUMBER	WELL NUMBER	
439611.01.RI	TR-5TH-MW02	SHEET 1 OF 1

WELL COMPLETION DIAGRAM

PROJECT : Towers Road Disposal Area LOCATION : HPDTA, Hertford NC DATE: 6/13/2013

DRILLING CONTRACTOR : Parratt Wolff/ J. Ellingworth

DRILLING METHOD AND EQUIPMENT USED : 4.25" Hollow Stem Auger/Truck Mounted Drill Rig (IRA-300)

WATER LEVEL : 7.42' BTOC NORTHING: 867188.16 EASTING: 2788358.28 LOGGER : T. Stewart/VBO

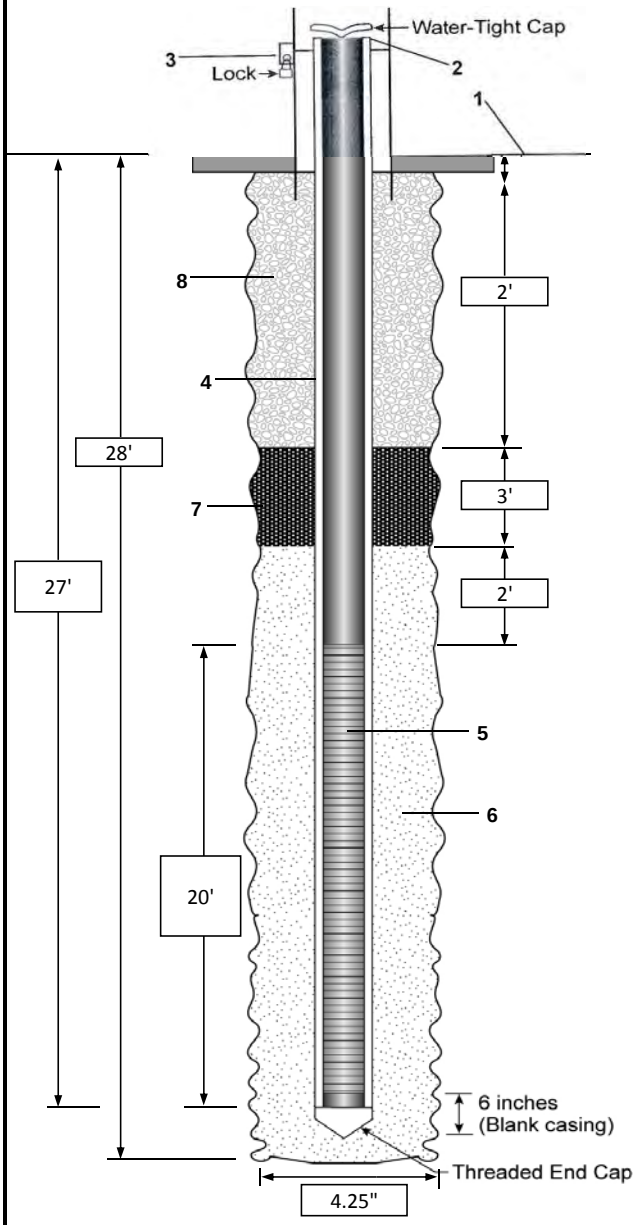

1- Ground elevation at well	6.01' amsl
2- Top of casing elevation	8.87' amsl
3- Wellhead protection cover type	Steel Stickup
a) concrete pad dimensions	24" Diameter Circle
4- Dia./type of well casing	2" Diameter PVC
5- Screen slot size	0.010" Machine Slotted
6- Type filter pack	#1 Sand
a) Quantity used	12 50-lb Bags
7- Type of seal	Sodiume Bentonite
a) Quantity used	1 50-lb Bag
8- Grout	
a) Grout mix used	Portland Cement
b) Method of placement	Tremie Pipe
c) Volume	
Development method	Surge and Pump

Comments:

Purged 30 gallons of water during development.

PROJECT NUMBER	WELL NUMBER	
439611.03.02	TR-5TH-MW03	SHEET 1 OF 1

WELL COMPLETION DIAGRAM

PROJECT: Tower Road Disposal Areas - Phase II Remedial Investigatic LOCATION : Harvey Point Defense Testing Activity, Hertford, NC (867167.15 N, 2788301.23 E)

DRILLING CONTRACTOR: Parratt Wolff

DRILLING METHOD AND EQUIPMENT USED: Geoprobe 7822DT, 4 1/2 ID 8 3/4 OD HAS, 5 ft Macro Core Sampler

WATER LEVELS: NA START: 1/26/2016 END: 1/26/2016 LOGGER: T. Stewart/VBO

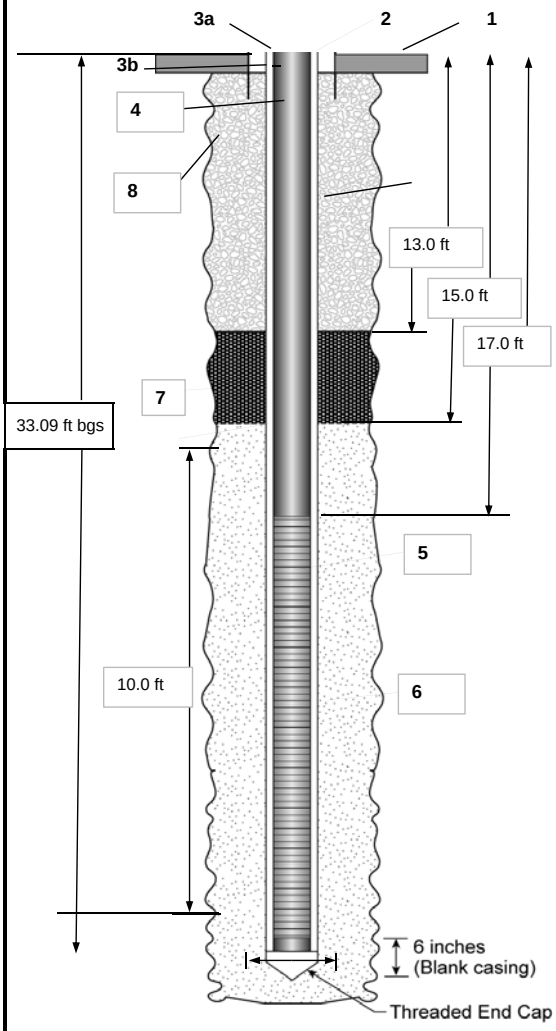

1- Ground elevation at well	6.63 ft
2- Top of casing elevation	6.55 ft
a) vent hole?	No
3- Wellhead protection cover type	6 inch diameter steel cover
a) weep hole?	No
b) concrete pad dimensions	3 ft diameter
4- Dia./type of well casing	2-inch/PVC
	Silver-Line® EnviroPure
5- Type/slot size of screen	PVC/0.01slot
	Silver-Line® EnviroPure
6- Type screen filter	sand pack
a) Quantity used	5.5 - 50lb bags
7- Type of seal	Enviroplug® tablets (3/8") and Medium Chip
a) Quantity used	1 - 50lb bag
8- Grout	
a) Grout mix used	Portland Type I/II
b) Method of placement	gravity feed
c) Vol. of well casing grout	~17 gallons
Development method	submersible pump (whale pump)
Development time	35 min.
Estimated purge volume	60 gallons

Comments

PROJECT NUMBER	WELL NUMBER	
439611.03.02	TR-5TH-MW04	SHEET 1 OF 1

WELL COMPLETION DIAGRAM

PROJECT: Tower Road Disposal Areas - Phase II Remedial Investigatic LOCATION : Harvey Point Defense Testing Activity, Hertford, NC (867276.53 N, 2788283.98 E)

DRILLING CONTRACTOR: Parratt Wolff

DRILLING METHOD AND EQUIPMENT USED: Geoprobe 7822DT, 4 1/2 ID 8 3/4 OD HAS, 5 ft Macro Core Sampler

WATER LEVELS: NA START: 1/26/2016 END: 1/26/2016 LOGGER: T. Stewart/VBO

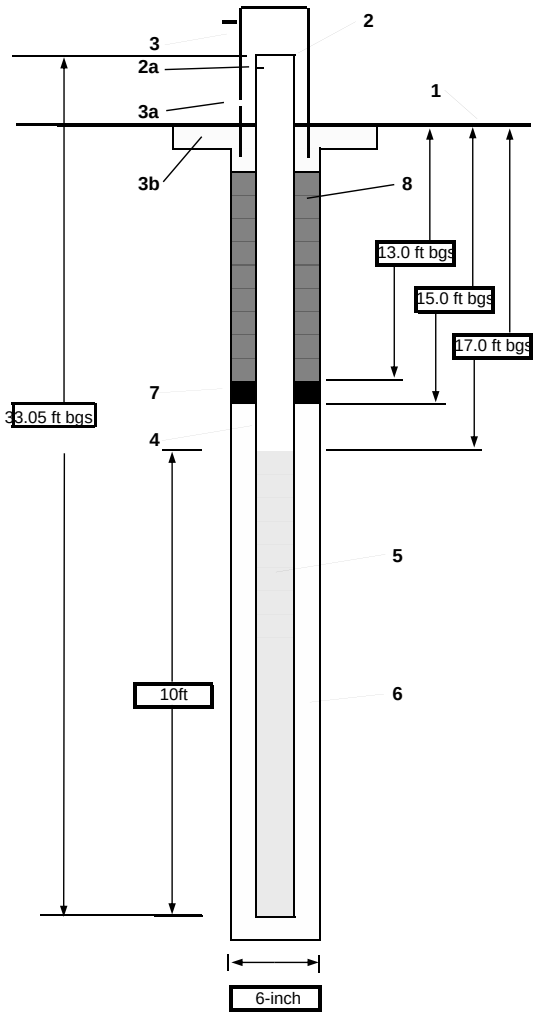

1- Ground elevation at well	5.16 ft
2- Top of casing elevation	7.60 ft
a) vent hole?	No
3- Wellhead protection cover type	4-inch square, steel casing
a) weep hole?	No
b) concrete pad dimensions	3ft diameter
4- Dia./type of well casing	2-inch/PVC
	Silver-Line® EnviroPure
5- Type/slot size of screen	PVC/0.01slot
	Silver-Line® EnviroPure
6- Type screen filter	sand pack
a) Quantity used	5.5 - 50lb bags
7- Type of seal	Enviroplug® tablets (3/8") and Medium Chip
a) Quantity used	1 - 50lb bag
8- Grout	
a) Grout mix used	Portland Type I/II
b) Method of placement	gravity feed
c) Vol. of well casing grout	~17 gallons
Development method	submersible pump (whale pump)
Development time	90 min.
Estimated purge volume	81 gallons

Comments

PROJECT NUMBER	WELL NUMBER	
439611.03.02	TR-5TH-MW05	SHEET 1 OF 1

WELL COMPLETION DIAGRAM

PROJECT: Tower Road Disposal Areas - Phase II Remedial Investigation LOCATION : Harvey Point Defense Testing Activity, Hertford, NC (867272.72 N, 2788400.94 E)

DRILLING CONTRACTOR: Parratt Wolff

DRILLING METHOD AND EQUIPMENT USED: Geoprobe 7822DT, 4 1/2 ID 8 3/4 OD HAS, 5 ft Macro Core Sampler

WATER LEVELS: NA START: 1/27/2016 END: 1/27/2016 LOGGER: T. Stewart/VBO

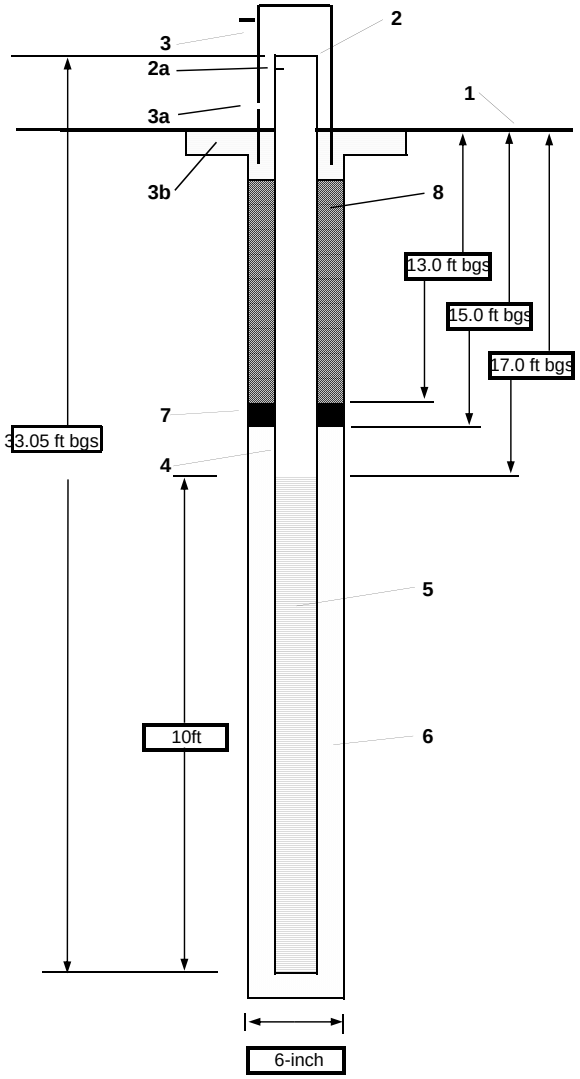

1-	Ground elevation at well	5.98 ft
2-	Top of casing elevation	8.62 ft
	a) vent hole?	No
3-	Wellhead protection cover type	4-inch square, steel casing
	a) weep hole?	No
	b) concrete pad dimensions	3 ft diameter
4-	Dia./type of well casing	2-inch/PVC
		Silver-Line® EnviroPure
5-	Type/slot size of screen	PVC/0.01slot
		Silver-Line® EnviroPure
6-	Type screen filter	sand pack
	a) Quantity used	5 - 50lb bags
7-	Type of seal	Enviroplug® tablets (3/8") and Medium Chip
	a) Quantity used	1.5 - 50lb bag
8-	Grout	
	a) Grout mix used	Portland Type I/II
	b) Method of placement	gravity feed
	c) Vol. of well casing grout	~17 gallons
	Development method	submersible pump (whale pump)
	Development time	90 min.
	Estimated purge volume	120.5 gallons

Comments

PROJECT NUMBER	WELL NUMBER	
439611.03.02	TR-5TH-MW06	SHEET 1 OF 1

WELL COMPLETION DIAGRAM

PROJECT: Tower Road Disposal Areas - Phase II Remedial Investigatic LOCATION : Harvey Point Defense Testing Activity, Hertford, NC (867194.56 N, 2788424.38 E)

DRILLING CONTRACTOR: Parratt Wolff

DRILLING METHOD AND EQUIPMENT USED: Geoprobe 7822DT, 4 1/2 ID 8 3/4 OD HAS, 5 ft Macro Core Sampler

WATER LEVELS: NA START: 1/27/2016 END: 1/27/2016 LOGGER: T. Stewart/VBO

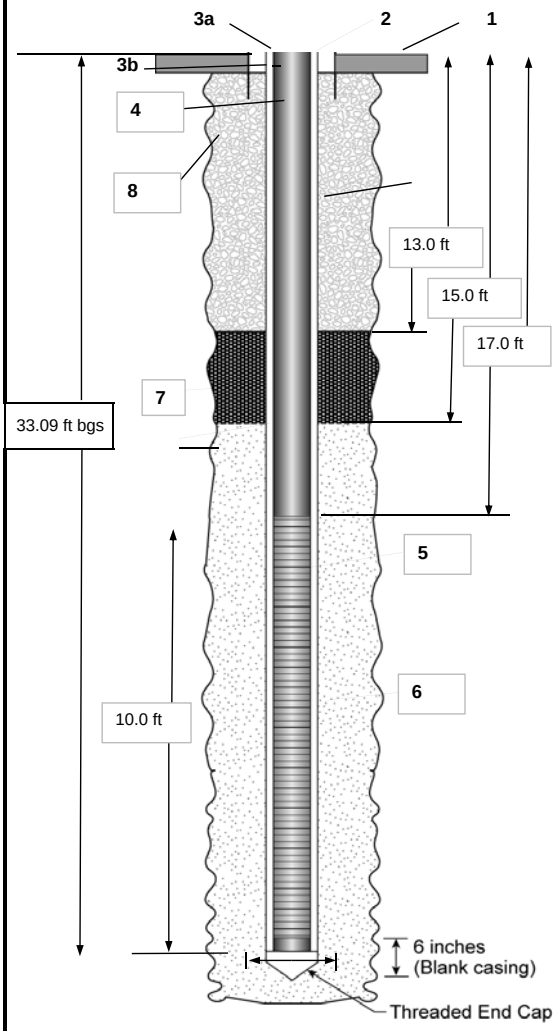

1- Ground elevation at well	6.63 ft
2- Top of casing elevation	6.41 ft
a) vent hole?	No
3- Wellhead protection cover type	6 inch diameter steel cover
a) weep hole?	No
b) concrete pad dimensions	3 ft diameter
4- Dia./type of well casing	2-inch/PVC
	Silver-Line® EnviroPure
5- Type/slot size of screen	PVC/0.01slot
	Silver-Line® EnviroPure
6- Type screen filter	sand pack
a) Quantity used	5.5 - 50lb bags
7- Type of seal	Enviroplug® tablets (3/8") and Medium Chip
a) Quantity used	1 - 50lb bag
8- Grout	
a) Grout mix used	Portland Type I/II
b) Method of placement	gravity feed
c) Vol. of well casing grout	~17 gallons
Development method	submersible pump (whale pump)
Development time	81 min.
Estimated purge volume	108 gallons

Comments

PROJECT NUMBER	WELL NUMBER	
439611.03.02	TR-5TH-MW07	SHEET 1 OF 1

WELL COMPLETION DIAGRAM

PROJECT: Tower Road Disposal Areas - Phase II Remedial Investigatic LOCATION : Harvey Point Defense Testing Activity, Hertford, NC (867151.62 N, 2788480.4 E)

DRILLING CONTRACTOR: Parratt Wolff

DRILLING METHOD AND EQUIPMENT USED: Geoprobe 7822DT, 4 1/2 ID 8 3/4 OD HAS, 5 ft Macro Core Sampler

WATER LEVELS: NA START: 1/28/2016 END: 1/28/2016 LOGGER: T. Stewart/VBO

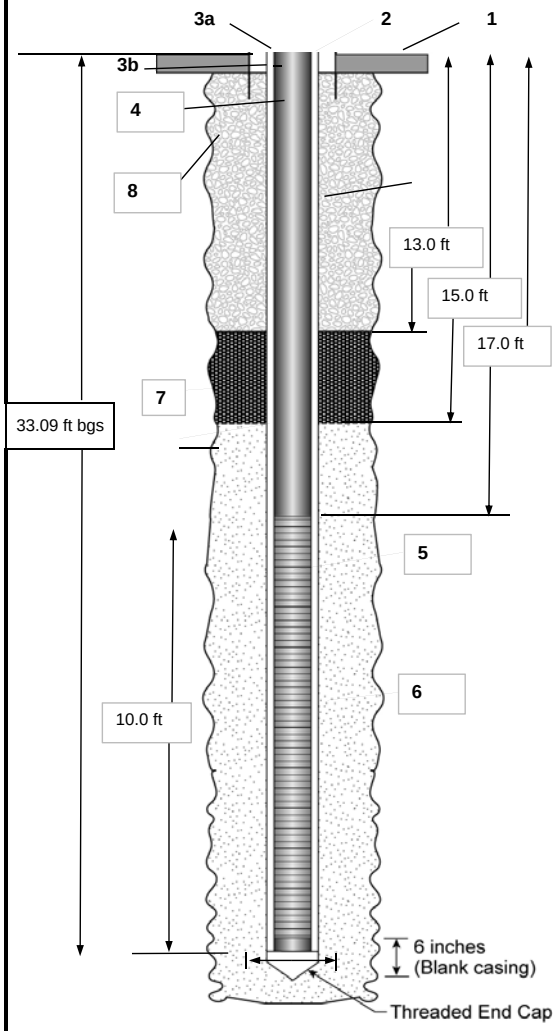

1- Ground elevation at well	6.40 ft
2- Top of casing elevation	6.31 ft
a) vent hole?	No
3- Wellhead protection cover type	6 inch diameter steel cover
a) weep hole?	No
b) concrete pad dimensions	3 ft diameter
4- Dia./type of well casing	2-inch/PVC
	Silver-Line® EnviroPure
5- Type/slot size of screen	PVC/0.01slot
	Silver-Line® EnviroPure
6- Type screen filter	sand pack
a) Quantity used	5.5 - 50lb bags
7- Type of seal	Enviroplug® tablets (3/8") and Medium Chip
a) Quantity used	1 - 50lb bag
8- Grout	
a) Grout mix used	Portland Type I/II
b) Method of placement	gravity feed
c) Vol. of well casing grout	~17 gallons
Development method	submersible pump (whale pump)
Development time	105 min.
Estimated purge volume	100 gallons

Comments

Attachment B
Analytical Data

List of Analytical Results

TRDA Remedial Investigation Report

Harvey Point Defense Testing Activity

Hertford, North Carolina

Table	Title
B-1	Phase I Background Surface Soil Raw Analytical Results
B-2	Phase I Background Subsurface Soil Raw Analytical Results
B-3	Phase I Surface Soil Raw Analytical Results - 2nd Street Disposal Area
B-4	Phase I Surface Soil Raw Analytical Results - 5th Street Disposal Area
B-5	Phase I Subsurface Soil Raw Analytical Results - 2nd Street Disposal Area
B-6	Phase I Subsurface Soil Raw Analytical Results - 5th Street Disposal Area
B-7	Phase II Background Soil Raw Analytical Data
B-8	Phase II Surface Soil Raw Analytical Data - 2nd Street Disposal Area
B-9	Phase II Surface Soil Raw Analytical Data - 5th Street Disposal Area
B-10	Phase II Subsurface Soil Raw Analytical Data - 2nd Street Disposal Area
B-11	Phase II Subsurface Soil Raw Analytical Data - 5th Street Disposal Area
B-12	Remedial Action Confirmation Sampling Raw Analytical Data - 2nd Street Disposal Area
B-13	Remedial Action Confirmation Sampling Raw Analytical Data - 5th Street Disposal Area
B-14	Phase I Background Groundwater Raw Analytical Results
B-15	Phase I Groundwater Raw Analytical Results - 2nd Street Disposal Area
B-16	Phase I Groundwater Raw Analytical Results - 5th Street Disposal Area
B-17	Phase II Background Groundwater Raw Analytical Data
B-18	Phase II Grab Groundwater Raw Analytical Data - 2nd Street Disposal Area
B-19	Phase II Grab Groundwater Raw Analytical Data - 5th Street Disposal Area
B-20	Phase II Groundwater Raw Analytical Data - 2nd Street Disposal Area
B-21	Phase II Groundwater Raw Analytical Data - 5th Street Disposal Area

TABLE B-1

Phase I Background Surface Soil Raw Analytical Results

TRDA Remedial Investigation Report

Harvey Point Defense Testing Activity

Hertford, North Carolina

Sample ID	**HPDTA-BG-SS01-0613**	**HPDTA-BG-SS02-0613**	**HPDTA-BG-SS03-0613**	**HPDTA-BG-SS04-0613**	**HPDTA-BG-SS05-0613**
Sample Date	**6/10/13**	**6/12/13**	**6/12/13**	**6/12/13**	**6/12/13**
Chemical Name					
Total Metals (mg/kg)					
Aluminum	9,090	16,500	14,200	20,800	5,070
Antimony	2.1 U	1.57 U	1.62 U	1.23 U	1.49 U
Arsenic	3.46 J	2.24 J	2.75 J	3.59	1.83 J
Barium	89.9	71.4	65.6	133	47.2
Beryllium	0.404	0.406	0.321	0.636	0.208
Cadmium	0.878	0.0787 U	0.081 U	0.0613 U	0.115 J
Calcium	3,600	1,810	886	1,320	1,720
Chromium	14	21.9	17.7	26.5	8.1
Chromium (hexavalent)	NS	NS	2.11	NS	NS
Cobalt	3.07	3	3.04	4.21	1.53
Copper	441	5.38	4.82	7.24	6.01
Iron	6,450	8,140	8,680	10,100	3,680
Lead	47.9	8.09	6.13	11.3	23.4
Magnesium	1,200	1,520	1,120	1,400	629
Manganese	388	108	315	412	175
Mercury	NS	NS	0.019	NS	NS
Nickel	7.78	9.49	7.38	10.5	3.5
Potassium	389	450	317	438	233
Selenium	2.1 U	1.57 U	1.62 U	1.23 U	1.49 U
Silver	0.524 U	0.393 U	0.405 U	0.306 U	0.372 U
Sodium	38.7 J	55.1	83.8	56.2	24.3 J
Thallium	2.1 U	0.493 J	1.62 U	1.23 U	1.49 U
Vanadium	12	19.8	16.6	21.7	8.21
Zinc	87.3	19.8	13	17.1	22.5

Notes:

J - Analyte present below the reporting limit

mg/kg - Milligrams per kilogram

NS - Not sampled

U - The material was analyzed for, but not detected

TABLE B-2

Phase I Background Subsurface Soil Raw Analytical Results

TRDA Remedial Investigation Report

Harvey Point Defense Testing Activity

Hertford, North Carolina

Sample ID	**HPDTA-BG-SB01-0.5-01-0613**	**HPDTA-BG-SB01-04-06-0613**	**HPDTA-BG-SB02-0.5-01-0613**	**HPDTA-BG-SB02-03-05-0613**	**HPDTA-BG-SB03-0.5-01-0613**	**HPDTA-BG-SB03-04-06-0613**	**HPDTA-BG-SB04-0.5-01-0613**	**HPDTA-BG-SB04-03-05-0613**	**HPDTA-BG-SB05-0.5-01-0613**	**HPDTA-BG-SB05-06-08-0613**
Sample Date	**6/12/13**	**6/12/13**	**6/13/13**	**6/13/13**	**6/19/13**	**6/19/13**	**6/19/13**	**6/19/13**	**6/18/13**	**6/18/13**
Chemical Name										
Total Metals (mg/kg)										
Aluminum	6,990	18,100	4,570	22,700	8,420	19,400	32,000	14,800	11,400	951
Antimony	1.45 U	1.73 U	1.93 U	1.49 U	1.44 U	1.77 U	1.72 U	1.61 U	1.11 U	1.57 U
Arsenic	2.4 J	3.74	3.44 J	3.12	2.05 J	2.65 J	2.6 J	3.09 J	1.83 J	1.2 J
Barium	43.3	51.9	7.89	65.3	41.7	53.5	134	45.2	49.9	3.08
Beryllium	0.268	0.374	0.115	0.45	0.275	0.44	0.593	0.338	0.291	0.0642 J
Cadmium	0.483	0.0865 U	0.0967 U	0.0744 U	0.0722 U	0.0884 U	0.0862 U	0.0803 U	0.0557 U	0.0389 J
Calcium	1,390	1,020	627	454	722	535	1,630	576	810	158
Chromium	11	22.9	7.94	29	12.6	23.7	38.5	20.9	15	3.77
Chromium (hexavalent)	NS	NS	NS	1.48	0.85	1.07	NS	NS	NS	NS
Cobalt	1.96	3.21	0.328 J	3.68	2	3.36	4.64	3.14	1.92	0.538 J
Copper	21.6	8.35	1.44	9.14	3.55	5.49	8.08	6.68	3.78	0.604 J
Iron	5,120	8,500	7,390	9,790	6,240	9,350	14,100	8,210	5,730	1,680
Lead	46.5	6.02	4.09	6.67	7.97	6.58	12.2	4.67	6.93	1.53 J
Magnesium	725	2,120	184	2,310	861	2,090	2,600	2,370	945	103
Manganese	98.4	67.8	7.98	69.7	131	70.9	114	66.2	94.2	12.7
Mercury	NS	NS	NS	0.00609 J	0.0281	0.00623 U	0.0366	0.00571 J	NS	NS
Nickel	5.59	10.7	0.69 J	12.1	4.94	10.4	16.8	10.4	6.14	0.645 J
Potassium	268	717	265	676	219	614	765	725	300	87.5
Selenium	1.45 U	1.73 U	1.93 U	1.49 U	1.44 U	1.77 U	1.72 U	1.61 U	1.11 U	1.57 U
Silver	0.362 U	0.432 U	0.483 U	0.372 U	0.361 U	0.442 U	0.431 U	0.401 U	0.279 U	0.393 U
Sodium	24.9 J	59	8.36 J	102	63.2	136	75	76.8	32.9	8.81 J
Thallium	1.45 U	0.473 J	1.93 U	1.49 U	1.44 U	0.519 J	1.29 J	0.489 J	0.314 J	1.57 U
Vanadium	9.96	20.2	12.5	26.6	13.6	23.5	31.9	21.4	13.7	4.51
Zinc	60.7	18.8	4.34	22.1	12.4	21.4	27.1	19.6	11.4	2.5

Notes:

J - Analyte present. Value may or may not be accurate or precise

mg/kg - Milligrams per kilogram

NS - Not sampled

U - The material was analyzed for, but not detected

TABLE B-3

Phase I Surface Soil Raw Analytical Results - 2nd Street Disposal Area

TRDA Remedial Investigation Report

Harvey Point Defense Testing Activity

Hertford, North Carolina

Sample ID	**TR-2ND-SS01-0613**	**TR-2ND-SS02-0613**	**TR-2ND-SS03-0613**	**TR-2ND-SS03D-0613**	**TR-2ND-SS04-0613**	**TR-2ND-SS05-0613**
Sample Date	**6/11/13**	**6/11/13**	**6/11/13**	**6/11/13**	**6/11/13**	**6/11/13**
Chemical Name						
Volatile Organic Compounds (mg/kg)						
1,1,1-Trichloroethane	0.0013 U	0.0013 U	0.001 U	0.0015 U	0.0015 U	0.0012 U
1,1,2,2-Tetrachloroethane	0.0013 U	0.0013 U	0.001 U	0.0015 U	0.0015 U	0.0012 U
1,1,2-Trichloro-1,2,2-trifluoroethane (Freon-113)	0.0013 U	0.0013 U	0.001 U	0.0015 U	0.0015 U	0.0012 U
1,1,2-Trichloroethane	0.0013 U	0.0013 U	0.001 U	0.0015 U	0.0015 U	0.0012 U
1,1-Dichloroethane	0.0013 U	0.0013 U	0.001 U	0.0015 U	0.0015 U	0.0012 U
1,1-Dichloroethene	0.0013 U	0.0013 U	0.001 U	0.0015 U	0.0015 U	0.0012 U
1,2,3-Trichlorobenzene	0.0013 U	0.0013 U	0.001 U	0.0015 U	0.0015 U	0.0012 U
1,2,4-Trichlorobenzene	0.0013 U	0.0013 U	0.001 U	0.0015 U	0.0015 U	0.0012 U
1,2-Dibromo-3-chloropropane	0.0013 U	0.0013 U	0.001 U	0.0015 U	0.0015 U	0.0012 U
1,2-Dibromoethane	0.0013 U	0.0013 U	0.001 U	0.0015 U	0.0015 U	0.0012 U
1,2-Dichlorobenzene	0.0013 U	0.0013 U	0.001 U	0.0015 U	0.0015 U	0.0012 U
1,2-Dichloroethane	0.0013 U	0.0013 U	0.001 U	0.0015 U	0.0015 U	0.0012 U
1,2-Dichloropropane	0.0013 U	0.0013 U	0.001 U	0.0015 U	0.0015 U	0.0012 U
1,3-Dichlorobenzene	0.0013 U	0.0013 U	0.001 U	0.0015 U	0.0015 U	0.0012 U
1,4-Dichlorobenzene	0.0013 U	0.0013 U	0.001 U	0.0015 U	0.0015 U	0.0012 U
1,4-Dioxane	0.063 U	0.065 U	0.049 U	0.074 U	0.074 U	0.058 U
2-Butanone	0.0032 U	0.0032 U	0.0025 U	0.0037 U	0.0037 U	0.0029 U
2-Hexanone	0.0032 U	0.0032 U	0.0025 U	0.0037 U	0.0037 U	0.0029 U
4-Methyl-2-pentanone	0.0032 U	0.0032 U	0.0025 U	0.0037 U	0.0037 U	0.0029 U
Acetone	0.016 U	0.016 U	0.012 U	0.018 U	0.018 U	0.012 J
Benzene	0.0013 U	0.0013 U	0.001 U	0.0015 U	0.0015 U	0.0012 U
Bromochloromethane	0.0013 U	0.0013 U	0.001 U	0.0015 U	0.0015 U	0.0012 U
Bromodichloromethane	0.0013 U	0.0013 U	0.001 U	0.0015 U	0.0015 U	0.0012 U
Bromoform	0.0013 U	0.0013 U	0.001 U	0.0015 U	0.0015 U	0.0012 U
Bromomethane	0.0063 U	0.0065 U	0.0049 U	0.0074 U	0.0074 U	0.0058 U
Carbon disulfide	0.0063 U	0.0065 U	0.0049 U	0.0074 U	0.0074 U	0.0058 U
Carbon tetrachloride	0.0013 U	0.0013 U	0.001 U	0.0015 U	0.0015 U	0.0012 U
Chlorobenzene	0.0013 U	0.0013 U	0.001 U	0.0015 U	0.0015 U	0.0012 U
Chloroethane	0.0013 U	0.0013 U	0.001 U	0.0015 U	0.0015 U	0.0012 U
Chloroform	0.0013 U	0.0013 U	0.001 U	0.0015 U	0.0015 U	0.0012 U
Chloromethane	0.0013 U	0.0013 U	0.001 U	0.0015 U	0.0015 U	0.0012 U
cis-1,2-Dichloroethene	0.0013 U	0.0013 U	0.001 U	0.0015 U	0.0015 U	0.0012 U
cis-1,3-Dichloropropene	0.0013 U	0.0013 U	0.001 U	0.0015 U	0.0015 U	0.0012 U
Cyclohexane	0.0013 U	0.0013 U	0.001 U	0.0015 U	0.0015 U	0.0012 U
Dibromochloromethane	0.0013 U	0.0013 U	0.001 U	0.0015 U	0.0015 U	0.0012 U
Dichlorodifluoromethane (Freon-12)	0.0013 U	0.0013 U	0.001 U	0.0015 U	0.0015 U	0.0012 U
Ethylbenzene	0.0013 U	0.0013 U	0.001 U	0.0015 U	0.0015 U	0.0012 U
Isopropylbenzene	0.0013 U	0.0013 U	0.001 U	0.0015 U	0.0015 U	0.0012 U

TABLE B-3

Phase I Surface Soil Raw Analytical Results - 2nd Street Disposal Area

TRDA Remedial Investigation Report

Harvey Point Defense Testing Activity

Hertford, North Carolina

Sample ID	**TR-2ND-SS01-0613**	**TR-2ND-SS02-0613**	**TR-2ND-SS03-0613**	**TR-2ND-SS03D-0613**	**TR-2ND-SS04-0613**	**TR-2ND-SS05-0613**
Sample Date	**6/11/13**	**6/11/13**	**6/11/13**	**6/11/13**	**6/11/13**	**6/11/13**
Chemical Name						
m- and p-Xylene	0.0025 U	0.0026 U	0.002 U	0.0029 U	0.003 U	0.0023 U
Methyl acetate	0.0063 U	0.0065 U	0.0049 U	0.0074 U	0.0074 U	0.0058 U
Methylcyclohexane	0.0013 U	0.0013 U	0.001 U	0.0015 U	0.0015 U	0.0012 U
Methylene chloride	0.0063 U	0.0065 U	0.0049 U	0.0074 U	0.0074 U	0.0058 U
Methyl-tert-butyl ether (MTBE)	0.0013 U	0.0013 U	0.001 U	0.0015 U	0.0015 U	0.0012 U
o-Xylene	0.0013 U	0.0013 U	0.001 U	0.0015 U	0.0015 U	0.0012 U
Styrene	0.0013 U	0.0013 U	0.001 U	0.0015 U	0.0015 U	0.0012 U
Tetrachloroethene	0.0013 U	0.0013 U	0.001 U	0.0015 U	0.0015 U	0.0012 U
Toluene	0.0013 U	0.0013 U	0.001 U	0.0015 U	0.0015 U	0.0012 U
trans-1,2-Dichloroethene	0.0013 U	0.0013 U	0.001 U	0.0015 U	0.0015 U	0.0012 U
trans-1,3-Dichloropropene	0.0013 U	0.0013 U	0.001 U	0.0015 U	0.0015 U	0.0012 U
Trichloroethene	0.0013 U	0.0013 U	0.001 U	0.0015 U	0.0015 U	0.0012 U
Trichlorofluoromethane (Freon-11)	0.0013 U	0.0013 U	0.001 U	0.0015 U	0.0015 U	0.0012 U
Vinyl chloride	0.0013 U	0.0013 U	0.001 U	0.0015 U	0.0015 U	0.0012 U
Xylene, total	0.0025 U	0.0026 U	0.002 U	0.0029 U	0.003 U	0.0023 U
Semivolatile Organic Compounds (mg/kg)						
1,1-Biphenyl	0.13 U	0.26 UD	0.13 U	0.13 U	0.12 U	0.12 U
1,2,4,5-Tetrachlorobenzene	0.13 U	0.26 UD	0.13 U	0.13 U	0.12 U	0.12 U
2,2'-Oxybis(1-chloropropane)	0.13 U	0.26 UD	0.13 U	0.13 U	0.12 U	0.12 U
2,3,4,6-Tetrachlorophenol	0.25 UQ	0.52 UDQ	0.25 UQ	0.25 UQ	0.25 UQ	0.23 UQ
2,4,5-Trichlorophenol	0.13 U	0.26 UD	0.13 U	0.13 U	0.12 U	0.12 U
2,4,6-Trichlorophenol	0.13 U	0.26 UD	0.13 U	0.13 U	0.12 U	0.12 U
2,4-Dichlorophenol	0.13 U	0.26 UD	0.13 U	0.13 U	0.12 U	0.12 U
2,4-Dimethylphenol	0.13 UQ	0.26 UDQ	0.13 UQ	0.13 UQ	0.12 UQ	0.12 UQ
2,4-Dinitrophenol	0.38 U	0.78 UD	0.38 U	0.38 U	0.37 U	0.35 U
2,4-Dinitrotoluene	0.13 U	0.26 UD	0.13 U	0.13 U	0.12 U	0.12 U
2,6-Dinitrotoluene	0.13 U	0.26 UD	0.13 U	0.13 U	0.12 U	0.12 U
2-Chloronaphthalene	0.13 U	0.26 UD	0.13 U	0.13 U	0.12 U	0.12 U
2-Chlorophenol	0.13 U	0.26 UD	0.13 U	0.13 U	0.12 U	0.12 U
2-Methylnaphthalene	0.023 J	0.032 U	0.023 J	0.031 U	0.031 U	0.029 U
2-Methylphenol	0.13 U	0.26 UD	0.13 U	0.13 U	0.12 U	0.12 U
2-Nitroaniline	0.13 U	0.26 UD	0.13 U	0.13 U	0.12 U	0.12 U
2-Nitrophenol	0.13 U	0.26 UD	0.13 U	0.13 U	0.12 U	0.12 U
3- and 4-Methylphenol	0.25 U	0.52 UD	0.25 U	0.25 U	0.25 U	0.23 U
3,3'-Dichlorobenzidine	0.13 U	0.26 UD	0.13 U	0.13 U	0.12 U	0.12 U
3-Nitroaniline	0.13 U	0.26 UD	0.13 U	0.13 U	0.12 U	0.12 U
4,6-Dinitro-2-methylphenol	0.38 U	0.78 UD	0.38 U	0.38 U	0.37 U	0.35 U
4-Bromophenyl-phenylether	0.13 U	0.26 UD	0.13 U	0.13 U	0.12 U	0.12 U

TABLE B-3

Phase I Surface Soil Raw Analytical Results - 2nd Street Disposal Area

TRDA Remedial Investigation Report

Harvey Point Defense Testing Activity

Hertford, North Carolina

Sample ID	**TR-2ND-SS01-0613**	**TR-2ND-SS02-0613**	**TR-2ND-SS03-0613**	**TR-2ND-SS03D-0613**	**TR-2ND-SS04-0613**	**TR-2ND-SS05-0613**
Sample Date	**6/11/13**	**6/11/13**	**6/11/13**	**6/11/13**	**6/11/13**	**6/11/13**
Chemical Name						
4-Chloro-3-methylphenol	0.13 U	0.26 UD	0.13 U	0.13 U	0.12 U	0.12 U
4-Chloroaniline	0.13 UQ	0.26 UDQ	0.13 UQ	0.13 UQ	0.12 UQ	0.12 UQ
4-Chlorophenyl-phenylether	0.13 U	0.26 UD	0.13 U	0.13 U	0.12 U	0.12 U
4-Nitroaniline	0.13 U	0.26 UD	0.13 U	0.13 U	0.12 U	0.12 U
4-Nitrophenol	0.13 U	0.26 UD	0.13 U	0.13 U	0.12 U	0.12 U
Acenaphthene	0.035 J	0.042 J	0.033 J	0.022 J	0.031 U	0.029 U
Acenaphthylene	0.048	0.19	0.043 J	0.029 J	0.027 J	0.029 U
Acetophenone	0.13 U	0.26 UD	0.13 U	0.13 U	0.12 U	0.12 U
Anthracene	0.04 J	0.2	0.04 J	0.027 J	0.032 J	0.029 U
Atrazine	0.13 UQ	0.26 UDQ	0.13 UQ	0.13 UQ	0.12 UQ	0.12 UQ
Benzaldehyde	0.13 U	0.26 UD	0.13 U	0.13 U	0.12 U	0.12 U
Benzo(a)anthracene	0.08	0.65	0.065	0.059	0.074	0.029 U
Benzo(a)pyrene	0.08	0.54	0.063	0.051	0.076	0.029 U
Benzo(b)fluoranthene	0.11	0.88	0.083	0.078	0.14	0.029 U
Benzo(g,h,i)perylene	0.048	0.3	0.048	0.042 J	0.052	0.029 U
Benzo(k)fluoranthene	0.073	0.41	0.058	0.051	0.071	0.029 U
bis(2-Chloroethoxy)methane	0.13 U	0.26 UD	0.13 U	0.13 U	0.12 U	0.12 U
bis(2-Chloroethyl)ether	0.13 U	0.26 UD	0.13 U	0.13 U	0.12 U	0.12 U
bis(2-Ethylhexyl)phthalate	0.13 U	0.26 UD	0.13 U	0.13 U	0.11 J	0.12 U
Butylbenzylphthalate	0.13 U	0.26 UD	0.13 U	0.13 U	0.12 U	0.12 U
Caprolactam	0.25 UQ	0.52 UDQ	0.25 UQ	0.25 UQ	0.25 UQ	0.23 UQ
Carbazole	0.13 U	0.26 UD	0.13 U	0.13 U	0.12 U	0.12 U
Chrysene	0.085	0.66	0.07	0.059	0.084	0.029 U
Dibenz(a,h)anthracene	0.032 U	0.083	0.023 J	0.031 U	0.031 U	0.029 U
Dibenzofuran	0.13 U	0.26 UD	0.13 U	0.13 U	0.12 U	0.12 U
Diethylphthalate	0.13 U	0.26 UD	0.13 U	0.13 U	0.12 U	0.12 U
Dimethyl phthalate	0.13 U	0.26 UD	0.13 U	0.13 U	0.12 U	0.12 U
Di-n-butylphthalate	0.13 UQ	0.26 UDQ	0.13 UQ	0.13 UQ	0.12 UQ	0.12 UQ
Di-n-octylphthalate	0.13 U	0.26 UD	0.13 U	0.13 U	0.12 U	0.12 U
Fluoranthene	0.11	0.89	0.09	0.078	0.12	0.029 U
Fluorene	0.028 J	0.042 J	0.028 J	0.031 U	0.031 U	0.029 U
Hexachlorobenzene	0.13 U	0.26 UD	0.13 U	0.13 U	0.12 U	0.12 U
Hexachlorobutadiene	0.13 U	0.26 UD	0.13 U	0.13 U	0.12 U	0.12 U
Hexachlorocyclopentadiene	0.13 U	0.26 UD	0.13 U	0.13 U	0.12 U	0.12 U
Hexachloroethane	0.13 U	0.26 UD	0.13 U	0.13 U	0.12 U	0.12 U
Indeno(1,2,3-cd)pyrene	0.04 J	0.24	0.035 J	0.034 J	0.042 J	0.029 U
Isophorone	0.13 U	0.26 UD	0.13 U	0.13 U	0.12 U	0.12 U
Naphthalene	0.038 J	0.034 J	0.033 J	0.027 J	0.031 U	0.029 U
Nitrobenzene	0.13 U	0.26 UD	0.13 U	0.13 U	0.12 U	0.12 U
n-Nitroso-di-n-propylamine	0.13 U	0.26 UD	0.13 U	0.13 U	0.12 U	0.12 U
n-Nitrosodiphenylamine	0.25 U	0.52 UD	0.25 U	0.25 U	0.25 U	0.23 U
Pentachlorophenol	0.38 U	0.78 UD	0.38 U	0.38 U	0.37 U	0.35 U

TABLE B-3

Phase I Surface Soil Raw Analytical Results - 2nd Street Disposal Area

TRDA Remedial Investigation Report

Harvey Point Defense Testing Activity

Hertford, North Carolina

Sample ID	**TR-2ND-SS01-0613**	**TR-2ND-SS02-0613**	**TR-2ND-SS03-0613**	**TR-2ND-SS03D-0613**	**TR-2ND-SS04-0613**	**TR-2ND-SS05-0613**
Sample Date	**6/11/13**	**6/11/13**	**6/11/13**	**6/11/13**	**6/11/13**	**6/11/13**
Chemical Name						
Phenanthrene	0.058	0.11	0.053	0.047	0.071	0.029 U
Phenol	0.13 U	0.26 UD	0.13 U	0.13 U	0.12 U	0.12 U
Pyrene	0.11	0.98	0.095	0.078	0.12	0.029 U
Pesticide/Polychlorinated Biphenyls (mg/kg)						
4,4'-DDD	0.0025 UD	0.0026 UD	0.0025 UD	0.0025 UD	0.0025 UD	0.0023 UD
4,4'-DDE	0.0025 UDQ	0.0026 UDQ	0.0025 UDQ	0.0025 UDQ	0.0025 UDQ	0.0023 UDQ
4,4'-DDT	NS	0.0026 UD	0.0025 UD	0.0025 UD	0.0025 UD	0.0023 UD
Aldrin	0.0025 UD	0.0026 UD	0.0025 UD	0.0025 UD	0.0025 UD	0.0023 UD
alpha-BHC	0.0025 UD	0.0026 UD	0.0025 UD	0.0025 UD	0.0025 UD	0.0023 UD
alpha-Chlordane	0.0025 UD	0.0026 UD	0.0025 UD	0.0025 UD	0.0025 UD	0.0023 UD
Aroclor-1016	0.025 U	0.026 U	0.025 U	0.025 U	0.025 U	0.023 U
Aroclor-1016/1242	0.025 U	0.026 U	0.025 U	0.025 U	0.025 U	0.023 U
Aroclor-1221	0.025 U	0.026 U	0.025 U	0.025 U	0.025 U	0.023 U
Aroclor-1232	0.025 U	0.026 U	0.025 U	0.025 U	0.025 U	0.023 U
Aroclor-1242	0.025 U	0.026 U	0.025 U	0.025 U	0.025 U	0.023 U
Aroclor-1248	0.025 U	0.026 U	0.025 U	0.025 U	0.025 U	0.023 U
Aroclor-1254	0.025 U	0.061 Q	0.12	0.093	0.13 PQ	0.084
Aroclor-1260	0.025 UQ	0.14	0.13	0.092	0.19	0.091
Aroclor-1262	0.025 U	0.026 U	0.025 U	0.025 U	0.025 U	0.023 U
Aroclor-1268	0.025 U	0.026 U	0.025 U	0.025 U	0.025 U	0.023 U
beta-BHC	0.0025 UD	0.0026 UD	0.0025 UD	0.0025 UD	0.0025 UD	0.0023 UD
delta-BHC	0.0025 UD	0.0026 UD	0.0025 UD	0.0025 UD	0.0025 UD	0.0023 UD
Dieldrin	0.0025 UD	0.0026 UD	0.0025 UD	0.0025 UD	0.0025 UD	0.0023 UD
Endosulfan I	0.0025 UD	0.0026 UD	0.0025 UD	0.0025 UD	0.0025 UD	0.0023 UD
Endosulfan II	0.0025 UD	0.0026 UD	0.0025 UD	0.0025 UD	0.0025 UD	0.0023 UD
Endosulfan sulfate	0.0025 UD	0.0026 UD	0.0025 UD	0.0025 UD	0.0025 UD	0.0023 UD
Endrin	0.0025 UD	0.0026 UD	0.0025 UD	0.0025 UD	0.0025 UD	0.0023 UD
Endrin aldehyde	0.0025 UD	0.0026 UD	0.0025 UD	0.0025 UD	0.0025 UD	0.0023 UD
Endrin ketone	0.0025 UD	0.0026 UD	0.0025 UD	0.0025 UD	0.0025 UD	0.0023 UD
gamma-BHC (Lindane)	0.0025 UD	0.0026 UD	0.0025 UD	0.0025 UD	0.0025 UD	0.0023 UD
gamma-Chlordane	0.0025 UD	0.0026 UD	0.0025 UD	0.0025 UD	0.0025 UD	0.0023 UD
Heptachlor	0.0025 UD	0.0026 UD	0.0025 UD	0.0025 UD	0.0025 UD	0.0023 UD
Heptachlor epoxide	0.0025 UD	0.0026 UD	0.0025 UD	0.0025 UD	0.0025 UD	0.0023 UD
Methoxychlor	0.0025 UD	0.0026 UD	0.0025 UD	0.0025 UD	0.0025 UD	0.0023 UD
Toxaphene	0.051 UD	0.052 UD	0.05 UD	0.05 UD	0.05 UD	0.046 UD
Total Metals (mg/kg)						
Aluminum	18,800	12,200	9,890	10,200	11,000	11,500
Antimony	1.12 U	3.49	6.41	3.25	8.14	1.58 U
Arsenic	3.17	5.02	4.96	4.63	7.52	2.82 J
Barium	90.4	156	332	207	329	68.6

TABLE B-3

Phase I Surface Soil Raw Analytical Results - 2nd Street Disposal Area

TRDA Remedial Investigation Report

Harvey Point Defense Testing Activity

Hertford, North Carolina

Sample ID	**TR-2ND-SS01-0613**	**TR-2ND-SS02-0613**	**TR-2ND-SS03-0613**	**TR-2ND-SS03D-0613**	**TR-2ND-SS04-0613**	**TR-2ND-SS05-0613**
Sample Date	**6/11/13**	**6/11/13**	**6/11/13**	**6/11/13**	**6/11/13**	**6/11/13**
Chemical Name						
Beryllium	0.363	0.323	0.248	0.258	0.288	0.455
Cadmium	0.364	6.24	3.74	3.21	3.56	0.0792 U
Calcium	3,040	11,700	12,400	7,740	9,140	1,090
Chromium	27.1	41.6	31.5	30.4	37.9	16.9
Chromium (hexavalent)	0.28 U	0.28 U	NS	NS	NS	NS
Cobalt	3.62	6.58	4.21	4.06	6.72	2.86
Copper	46.4	269	250	254	639	6.84
Iron	10,400	25,100	30,000	13,100	28,000	6,940
Lead	37.1	223	166	161	348	10.5
Magnesium	1,900	1,890	1,350	1,510	1,780	1,360
Manganese	142	310	319	296	412	298
Mercury	0.934	3.62 D	NS	NS	NS	NS
Nickel	11.2	19	12.6	12.4	36.6	7.79
Potassium	685	631	809	796	774	403
Selenium	1.12 U	1.3 U	1.57 U	1.53 U	1.73 U	1.58 U
Silver	2.48	3.81	5.28	15.6	20.5	0.396 U
Sodium	62	91.4	72.4	71.4	188	41.4
Thallium	1.12 U	1.3 U	1.57 U	1.53 U	1.73 U	1.58 U
Vanadium	23.1	17.6	14.2	16.2	16.1	17.2
Zinc	99.2	738	588	591	1,020	25.7

Notes:

D - Compound identified in an analysis at a secondary dilution factor

J - Analyte present below the reporting limit

mg/kg - Milligrams per kilogram

NS - Not sampled

P - Indicates a greater than 25% difference of detection between the primary and secondary column.

Q - One or more quality control criteria failed

U - The material was analyzed for, but not detected

TABLE B-4

Phase I Surface Soil Raw Analytical Results - 5th Street Disposal Area

TRDA Remedial Investigation Report

Harvey Point Defense Testing Activity

Hertford, North Carolina

Sample ID	**TR-5TH-SS01-0613**	**TR-5TH-SS02-0613**	**TR-5TH-SS03-0613**	**TR-5TH-SS04-0613**	**TR-5TH-SS05-0613**	**TR-5TH-SS05D-0613**
Sample Date	**6/10/13**	**6/10/13**	**6/10/13**	**6/10/13**	**6/10/13**	**6/10/13**
Chemical Name						
Volatile Organic Compounds (mg/kg)						
1,1,1-Trichloroethane	0.001 U	0.0013 U	0.001 U	0.0011 U	0.001 U	0.001 U
1,1,2,2-Tetrachloroethane	0.001 U	0.0013 U	0.001 U	0.0011 U	0.001 U	0.001 U
1,1,2-Trichloro-1,2,2-trifluoroethane (Freon-113)	0.001 U	0.0013 U	0.001 U	0.0011 U	0.001 U	0.001 U
1,1,2-Trichloroethane	0.001 U	0.0013 U	0.001 U	0.0011 U	0.001 U	0.001 U
1,1-Dichloroethane	0.001 U	0.0013 U	0.001 U	0.0011 U	0.001 U	0.001 U
1,1-Dichloroethene	0.001 U	0.0013 U	0.001 U	0.0011 U	0.001 U	0.001 U
1,2,3-Trichlorobenzene	0.001 U	0.0013 U	0.001 U	0.0011 U	0.001 U	0.001 U
1,2,4-Trichlorobenzene	0.001 U	0.0013 U	0.001 U	0.0011 U	0.001 U	0.001 U
1,2-Dibromo-3-chloropropane	0.001 U	0.0013 U	0.001 U	0.0011 U	0.001 U	0.001 U
1,2-Dibromoethane	0.001 U	0.0013 U	0.001 U	0.0011 U	0.001 U	0.001 U
1,2-Dichlorobenzene	0.001 U	0.0013 U	0.001 U	0.0011 U	0.001 U	0.001 U
1,2-Dichloroethane	0.001 U	0.0013 U	0.001 U	0.0011 U	0.001 U	0.001 U
1,2-Dichloropropane	0.001 U	0.0013 U	0.001 U	0.0011 U	0.001 U	0.001 U
1,3-Dichlorobenzene	0.001 U	0.0013 U	0.001 U	0.0011 U	0.001 U	0.001 U
1,4-Dichlorobenzene	0.001 U	0.0013 U	0.001 U	0.0011 U	0.001 U	0.001 U
1,4-Dioxane	0.052 U	0.065 U	0.05 U	0.053 U	0.048 U	0.051 U
2-Butanone	0.0026 U	0.0032 U	0.0025 U	0.0027 U	0.0024 U	0.0025 U
2-Hexanone	0.0026 U	0.0032 U	0.0025 U	0.0027 U	0.0024 U	0.0025 U
4-Methyl-2-pentanone	0.0026 U	0.0032 U	0.0025 U	0.0027 U	0.0024 U	0.0025 U
Acetone	0.013 U	0.016 U	0.012 U	0.013 U	0.012 U	0.013 U
Benzene	0.001 U	0.0013 U	7.00E-04 J	0.0011 U	0.001 U	0.001 U
Bromochloromethane	0.001 U	0.0013 U	0.001 U	0.0011 U	0.001 U	0.001 U
Bromodichloromethane	0.001 U	0.0013 U	0.001 U	0.0011 U	0.001 U	0.001 U
Bromoform	0.001 U	0.0013 U	0.001 U	0.0011 U	0.001 U	0.001 U
Bromomethane	0.0052 U	0.0065 U	0.005 U	0.0053 U	0.0048 U	0.0051 U
Carbon disulfide	0.0052 U	0.0065 U	0.005 U	0.0053 U	0.0048 U	0.0051 U
Carbon tetrachloride	0.001 U	0.0013 U	0.001 U	0.0011 U	0.001 U	0.001 U
Chlorobenzene	0.001 U	0.0013 U	0.001 U	0.0011 U	0.001 U	0.001 U
Chloroethane	0.001 U	0.0013 U	0.001 U	0.0011 U	0.001 U	0.001 U
Chloroform	0.001 U	0.0013 U	0.001 U	0.0011 U	0.001 U	0.001 U
Chloromethane	0.001 U	0.0013 U	0.001 U	0.0011 U	0.001 U	0.001 U
cis-1,2-Dichloroethene	0.001 U	0.0013 U	0.001 U	0.0011 U	0.001 U	0.001 U
cis-1,3-Dichloropropene	0.001 U	0.0013 U	0.001 U	0.0011 U	0.001 U	0.001 U
Cyclohexane	0.001 U	0.0013 U	0.001 U	0.0011 U	0.001 U	0.001 U
Dibromochloromethane	0.001 U	0.0013 U	0.001 U	0.0011 U	0.001 U	0.001 U
Dichlorodifluoromethane (Freon-12)	0.001 U	0.0013 U	0.001 U	0.0011 U	0.001 U	0.001 U
Ethylbenzene	0.001 U	0.0013 U	0.001 U	0.0011 U	0.001 U	0.001 U
Isopropylbenzene	0.001 U	0.0013 U	0.001 U	0.0011 U	0.001 U	0.001 U

TABLE B-4

Phase I Surface Soil Raw Analytical Results - 5th Street Disposal Area

TRDA Remedial Investigation Report

Harvey Point Defense Testing Activity

Hertford, North Carolina

Sample ID	**TR-5TH-SS01-0613**	**TR-5TH-SS02-0613**	**TR-5TH-SS03-0613**	**TR-5TH-SS04-0613**	**TR-5TH-SS05-0613**	**TR-5TH-SS05D-0613**
Sample Date	**6/10/13**	**6/10/13**	**6/10/13**	**6/10/13**	**6/10/13**	**6/10/13**
Chemical Name						
m- and p-Xylene	0.0021 U	0.0026 U	0.002 U	0.0021 U	0.0019 U	0.002 U
Methyl acetate	0.0052 U	0.0065 U	0.005 U	0.0053 U	0.0048 U	0.0051 U
Methylcyclohexane	0.001 U	0.0013 U	0.001 U	0.0011 U	0.001 U	0.001 U
Methylene chloride	0.0052 U	0.0065 U	0.005 U	0.0053 U	0.0048 U	0.0051 U
Methyl-tert-butyl ether (MTBE)	0.001 U	0.0013 U	0.001 U	0.0011 U	0.001 U	0.001 U
o-Xylene	0.001 U	0.0013 U	0.001 U	0.0011 U	0.001 U	0.001 U
Styrene	0.001 U	0.0013 U	4.00E-04 J	0.0011 U	0.001 U	0.001 U
Tetrachloroethene	0.001 U	0.0013 U	0.001 U	0.0011 U	0.001 U	0.001 U
Toluene	0.001 U	0.0013 U	0.001 U	0.0011 U	0.001 U	0.001 U
trans-1,2-Dichloroethene	0.001 U	0.0013 U	0.001 U	0.0011 U	0.001 U	0.001 U
trans-1,3-Dichloropropene	0.001 U	0.0013 U	0.001 U	0.0011 U	0.001 U	0.001 U
Trichloroethene	0.001 U	0.0013 U	0.001 U	0.0011 U	0.001 U	0.001 U
Trichlorofluoromethane (Freon-11)	0.001 U	0.0013 U	0.001 U	0.0011 U	0.001 U	0.001 U
Vinyl chloride	0.001 U	0.0013 U	0.001 U	0.0011 U	0.001 U	0.001 U
Xylene, total	0.0021 U	0.0026 U	0.002 U	0.0021 U	0.0019 U	0.002 U
Semivolatile Organic Compounds (mg/kg)						
1,1-Biphenyl	0.12 U	0.13 U	0.12 U	0.12 U	0.11 U	0.11 U
1,2,4,5-Tetrachlorobenzene	0.12 UQ	0.13 UQ	0.12 UQ	0.12 UQ	0.11 UQ	0.11 UQ
2,2'-Oxybis(1-chloropropane)	0.12 U	0.13 U	0.12 U	0.12 U	0.11 U	0.11 U
2,3,4,6-Tetrachlorophenol	0.24 U	0.26 U	0.24 U	0.24 U	0.23 U	0.23 U
2,4,5-Trichlorophenol	0.12 U	0.13 U	0.12 U	0.12 U	0.11 U	0.11 U
2,4,6-Trichlorophenol	0.12 U	0.13 U	0.12 U	0.12 U	0.11 U	0.11 U
2,4-Dichlorophenol	0.12 U	0.13 U	0.12 U	0.12 U	0.11 U	0.11 U
2,4-Dimethylphenol	0.12 U	0.13 U	0.12 U	0.12 U	0.11 U	0.11 U
2,4-Dinitrophenol	0.36 U	0.39 U	0.36 U	0.37 U	0.34 U	0.34 U
2,4-Dinitrotoluene	0.12 U	0.13 U	0.12 U	0.12 U	0.11 U	0.11 U
2,6-Dinitrotoluene	0.12 U	0.13 U	0.12 U	0.12 U	0.11 U	0.11 U
2-Chloronaphthalene	0.12 U	0.13 U	0.12 U	0.12 U	0.11 U	0.11 U
2-Chlorophenol	0.12 U	0.13 U	0.12 U	0.12 U	0.11 U	0.11 U
2-Methylnaphthalene	0.03 U	0.032 U	0.03 U	0.031 U	0.029 U	0.028 U
2-Methylphenol	0.12 U	0.13 U	0.12 U	0.12 U	0.11 U	0.11 U
2-Nitroaniline	0.12 U	0.13 U	0.12 U	0.12 U	0.11 U	0.11 U
2-Nitrophenol	0.12 U	0.13 U	0.12 U	0.12 U	0.11 U	0.11 U
3- and 4-Methylphenol	0.24 U	0.26 U	0.24 U	0.24 U	0.23 U	0.23 U
3,3'-Dichlorobenzidine	0.12 U	0.13 U	0.12 U	0.12 U	0.11 U	0.11 U
3-Nitroaniline	0.12 U	0.13 U	0.12 U	0.12 U	0.11 U	0.11 U
4,6-Dinitro-2-methylphenol	0.36 U	0.39 U	0.36 U	0.37 U	0.34 U	0.34 U
4-Bromophenyl-phenylether	0.12 U	0.13 U	0.12 U	0.12 U	0.11 U	0.11 U
4-Chloro-3-methylphenol	0.12 U	0.13 U	0.12 U	0.12 U	0.11 U	0.11 U
4-Chloroaniline	0.12 U	0.13 U	0.12 U	0.12 U	0.11 U	0.11 U

TABLE B-4

Phase I Surface Soil Raw Analytical Results - 5th Street Disposal Area

TRDA Remedial Investigation Report

Harvey Point Defense Testing Activity

Hertford, North Carolina

Sample ID	**TR-5TH-SS01-0613**	**TR-5TH-SS02-0613**	**TR-5TH-SS03-0613**	**TR-5TH-SS04-0613**	**TR-5TH-SS05-0613**	**TR-5TH-SS05D-0613**
Sample Date	**6/10/13**	**6/10/13**	**6/10/13**	**6/10/13**	**6/10/13**	**6/10/13**
Chemical Name						
4-Chlorophenyl-phenylether	0.12 U	0.13 U	0.12 U	0.12 U	0.11 U	0.11 U
4-Nitroaniline	0.12 U	0.13 U	0.12 U	0.12 U	0.11 U	0.11 U
4-Nitrophenol	0.12 U	0.13 U	0.12 U	0.12 U	0.11 U	0.11 U
Acenaphthene	0.03 U	0.032 U	0.03 U	0.031 U	0.087	0.028 U
Acenaphthylene	0.03 U	0.032 U	0.03 U	0.031 U	0.029 U	0.034 J
Acetophenone	0.12 U	0.13 U	0.12 U	0.12 U	0.11 U	0.11 U
Anthracene	0.03 U	0.032 U	0.03 U	0.031 U	0.53	0.043
Atrazine	0.12 U	0.13 U	0.12 U	0.12 U	0.11 U	0.11 U
Benzaldehyde	0.12 U	0.13 U	0.12 U	0.12 U	0.11 U	0.11 U
Benzo(a)anthracene	0.03 U	0.07	0.031 J	0.017 J	1.8	0.28
Benzo(a)pyrene	0.03 U	0.12	0.029 J	0.031 U	1	0.16
Benzo(b)fluoranthene	0.03 U	0.24	0.067	0.027 J	1.4	0.24
Benzo(g,h,i)perylene	0.03 U	0.075	0.03 U	0.031 U	0.33	0.058
Benzo(k)fluoranthene	0.03 U	0.13	0.038 J	0.031 U	0.69	0.13
bis(2-Chloroethoxy)methane	0.12 U	0.13 U	0.12 U	0.12 U	0.11 U	0.11 U
bis(2-Chloroethyl)ether	0.12 U	0.13 U	0.12 U	0.12 U	0.11 U	0.11 U
bis(2-Ethylhexyl)phthalate	0.12 U	0.13 U	0.12 U	0.12 U	0.18 J	0.11 U
Butylbenzylphthalate	0.12 U	0.13 U	0.12 U	0.12 U	0.11 U	0.11 U
Caprolactam	0.24 UQ	0.26 UQ	0.24 UQ	0.24 UQ	0.23 U	0.23 U
Carbazole	0.12 U	0.13 U	0.12 U	0.76	0.11 U	0.11 U
Chrysene	0.03 U	0.1	0.043	0.022 J	1.6	0.27
Dibenz(a,h)anthracene	0.03 U	0.032 U	0.03 U	0.031 U	0.094	0.028 U
Dibenzofuran	0.12 U	0.13 U	0.12 U	0.45	0.11 U	0.11 U
Diethylphthalate	0.12 U	0.13 U	0.12 U	0.12 U	0.11 U	0.11 U
Dimethyl phthalate	0.12 U	0.13 U	0.12 U	0.12 U	0.11 U	0.11 U
Di-n-butylphthalate	0.12 U	0.13 U	0.12 U	0.12 U	0.11 U	0.11 U
Di-n-octylphthalate	0.12 U	0.13 U	0.12 U	0.12 U	0.11 U	0.11 U
Fluoranthene	0.03 U	0.07	0.048	0.032 J	3.4	0.51
Fluorene	0.03 U	0.032 U	0.03 U	0.031 U	0.14	0.028 U
Hexachlorobenzene	0.12 U	0.13 U	0.12 U	0.12 U	0.11 U	0.11 U
Hexachlorobutadiene	0.12 U	0.13 U	0.12 U	0.12 U	0.11 U	0.11 U
Hexachlorocyclopentadiene	0.12 U	0.13 U	0.12 U	0.12 U	0.11 U	0.11 U
Hexachloroethane	0.12 U	0.13 U	0.12 U	0.12 U	0.11 U	0.11 U
Indeno(1,2,3-cd)pyrene	0.03 U	0.032 U	0.03 U	0.031 U	0.29	0.056
Isophorone	0.12 U	0.13 U	0.12 U	0.12 U	0.11 U	0.11 U
Naphthalene	0.03 U	0.032 U	0.03 U	0.031 U	0.029 U	0.028 U
Nitrobenzene	0.12 U	0.13 U	0.12 U	0.12 U	0.11 U	0.11 U
n-Nitroso-di-n-propylamine	0.12 U	0.13 U	0.12 U	0.12 U	0.11 U	0.11 U
n-Nitrosodiphenylamine	0.24 U	0.26 U	0.24 U	0.24 U	0.23 U	0.23 U
Pentachlorophenol	0.36 U	0.39 U	0.36 U	0.37 U	0.34 U	0.34 U
Phenanthrene	0.03 U	0.032 U	0.033 J	0.031 U	1.9	0.22
Phenol	0.12 U	0.13 U	0.12 U	0.12 U	0.11 U	0.11 U

TABLE B-4

Phase I Surface Soil Raw Analytical Results - 5th Street Disposal Area

TRDA Remedial Investigation Report

Harvey Point Defense Testing Activity

Hertford, North Carolina

Sample ID	**TR-5TH-SS01-0613**	**TR-5TH-SS02-0613**	**TR-5TH-SS03-0613**	**TR-5TH-SS04-0613**	**TR-5TH-SS05-0613**	**TR-5TH-SS05D-0613**
Sample Date	**6/10/13**	**6/10/13**	**6/10/13**	**6/10/13**	**6/10/13**	**6/10/13**
Chemical Name						
Pyrene	0.03 U	0.085	0.048	0.027 J	2.8	0.49
Pesticide/Polychlorinated Biphenyls (mg/kg)						
4,4'-DDD	0.0012 U	0.0026 UD	0.0024 UD	0.0012 U	0.0023 UD	0.0023 UD
4,4'-DDE	0.0012 U	0.0026 UDQ	0.0024 UDQ	0.0012 U	0.0023 UDQ	0.0023 UDQ
4,4'-DDT	0.0012 U	0.0026 UD	0.0024 UD	0.0012 U	0.0023 UD	0.0023 UD
Aldrin	0.0012 U	0.0026 UD	0.0024 UD	0.0012 U	0.0023 UD	0.0023 UD
alpha-BHC	0.0012 U	0.0026 UD	0.0024 UD	0.0012 U	0.0023 UD	0.0023 UD
alpha-Chlordane	0.0012 U	0.0026 UD	0.0024 UD	0.0012 U	0.0023 UD	0.0023 UD
Aroclor-1016	0.048 UD	0.052 UD	0.12 UD	0.024 U	0.023 U	0.046 UD
Aroclor-1016/1242	0.048 UD	0.052 UD	0.12 UD	0.024 U	0.023 U	0.046 UD
Aroclor-1221	0.048 UD	0.052 UD	0.12 UD	0.024 U	0.023 U	0.046 UD
Aroclor-1232	0.048 UD	0.052 UD	0.12 UD	0.024 U	0.023 U	0.046 UD
Aroclor-1242	0.048 UD	0.052 UD	0.12 UD	0.024 U	0.023 U	0.046 UD
Aroclor-1248	0.048 UD	0.052 UD	0.12 UD	0.024 U	0.023 U	0.046 UD
Aroclor-1254	0.36 D	0.32 D	2.8 D	0.15 Q	0.14 PQ	0.31 DPQ
Aroclor-1260	0.45 D	0.3 D	5.2 D	0.33	0.31	0.62 D
Aroclor-1262	0.048 UD	0.052 UD	0.12 UD	0.024 U	0.023 U	0.046 UD
Aroclor-1268	0.048 UD	0.052 UD	0.12 UD	0.024 U	0.023 U	0.046 UD
beta-BHC	0.0012 U	0.0026 UD	0.0024 UDQ	0.0012 U	0.0023 UDQ	0.0023 UDQ
delta-BHC	0.0012 U	0.0026 UD	0.0024 UDQ	0.0012 U	0.0023 UDQ	0.0023 UDQ
Dieldrin	0.0012 U	0.0026 UD	0.0024 UD	0.0012 U	0.0023 UD	0.0023 UD
Endosulfan I	0.0012 U	0.0026 UD	0.0024 UD	0.0012 U	0.0023 UD	0.0023 UD
Endosulfan II	0.0012 U	0.0026 UD	0.0024 UD	0.0012 U	0.0023 UD	0.0023 UD
Endosulfan sulfate	0.0012 U	0.0026 UD	0.0024 UD	0.0012 U	0.0023 UD	0.0023 UD
Endrin	0.0012 U	0.0026 UD	0.0024 UD	0.0012 U	0.0023 UD	0.0023 UD
Endrin aldehyde	0.0012 U	0.0026 UD	0.0024 UD	0.0012 U	0.0023 UD	0.0023 UD
Endrin ketone	0.0012 U	0.0026 UD	0.0024 UD	0.0012 U	0.0023 UD	0.0023 UD
gamma-BHC (Lindane)	0.0012 U	0.0026 UD	0.0024 UD	0.0012 U	0.0023 UD	0.0023 UD
gamma-Chlordane	0.0012 U	0.0026 UD	0.0024 UDQ	0.0012 U	0.0023 UDQ	0.0023 UDQ
Heptachlor	0.0012 U	0.0026 UD	0.0024 UD	0.0012 U	0.0023 UD	0.0023 UD
Heptachlor epoxide	0.0012 U	0.0026 UD	0.0024 UD	0.0012 U	0.0023 UD	0.0023 UD
Methoxychlor	0.0012 U	0.0026 UD	0.0024 UD	0.0012 U	0.0023 UD	0.0023 UD
Toxaphene	0.024 U	0.052 UD	0.048 UD	0.024 U	0.046 UD	0.046 UD
Total Metals (mg/kg)						
Aluminum	11,900	16,100	10,500	8,140	4,300	4,550
Antimony	1.8 U	1.93 U	0.785 J	1.53 U	1.36 U	1.58 U
Arsenic	5.28	2.53 J	2.94 J	2.26 J	1.4 J	1.74 J
Barium	93	80.3	78.9	50.2	26	30.3
Beryllium	0.373	0.383	0.327	0.246	0.155	0.177
Cadmium	1.25	1.23	1.73	1.02	0.285	0.22

TABLE B-4

Phase I Surface Soil Raw Analytical Results - 5th Street Disposal Area

TRDA Remedial Investigation Report

Harvey Point Defense Testing Activity

Hertford, North Carolina

Sample ID	**TR-5TH-SS01-0613**	**TR-5TH-SS02-0613**	**TR-5TH-SS03-0613**	**TR-5TH-SS04-0613**	**TR-5TH-SS05-0613**	**TR-5TH-SS05D-0613**
Sample Date	**6/10/13**	**6/10/13**	**6/10/13**	**6/10/13**	**6/10/13**	**6/10/13**
Chemical Name						
Calcium	1,860	1,510	1,360	1,190	1,060	911
Chromium	28.1	32.9	18.6	13.4	6.66	7.53
Chromium (hexavalent)	NS	NS	1.05	NS	NS	NS
Cobalt	4.47	4.06	3.59	2.13	1.4	1.64
Copper	69.4	60.8	123	28.1	12.9	10.9
Iron	17,500	11,300	11,100	6,240	3,390	4,190
Lead	127	180	164	107	23.8	22.2
Magnesium	1,490	1,840	1,390	940	667	864
Manganese	210	126	117	89.2	78.8	125
Mercury	NS	NS	0.739	NS	NS	NS
Nickel	15.6	13	16.8	6.31	3.14	3.63
Potassium	540	671	439	306	348	617
Selenium	1.8 U	1.93 U	1.56 U	1.53 U	1.36 U	1.58 U
Silver	0.45 U	0.482 U	0.389 U	0.381 U	0.34 U	0.396 U
Sodium	113	66.5	56.4	25.7 J	19.9 J	23.1 J
Thallium	1.8 U	1.93 U	1.56 U	1.53 U	1.36 U	1.58 U
Vanadium	17.3	19.4	14.2	11.3	7.24	8.2
Zinc	174	192	876	123	31.6	32.1

Notes:

D - Compound identified in an analysis at a secondary dilution factor

J - Analyte present below the reporting limit

mg/kg - Milligrams per kilogram

NS - Not sampled

P - Indicates a greater than 25% difference of detection between the primary and secondary column.

Q - One or more quality control criteria failed

U - The material was analyzed for, but not detected

TABLE B-5

Phase I Subsurface Soil Raw Analytical Results - 2nd Street Disposal Area

TRDA Remedial Investigation Report

Harvey Point Defense Testing Activity

Hertford, North Carolina

Sample ID	TR-2ND-SB01-0.5-01-0613	TR-2ND-SB01-06-08-0613	TR-2ND-SB02-0.5-1-0613	TR-2ND-SB02-06-08-0613	TR-2ND-SB03-0.5-01-0613	TR-2ND-SB03-04-06-0613	TR-2ND-SB04-0.5-01-0613	TR-2ND-SB04-04-06-0613	TR-2ND-SB05-0.5-01-0613	TR-2ND-SB05-03-05-0613	TR-2ND-SB06-0.5-01-0613	TR-2ND-SB06-05-07-0613	TR-2ND-SB06D-0.5-01-0613	TR-2ND-SB06D-05-07-0613	TR-2ND-SB07-0.5-01-0613	TR-2ND-SB07-04-06-0613
Sample Date	**6/11/13**	**6/11/13**	**6/19/13**	**6/19/13**	**6/19/13**	**6/19/13**	**6/19/13**	**6/19/13**	**6/19/13**	**6/19/13**	**6/19/13**	**6/19/13**	**6/19/13**	**6/19/13**	**6/19/13**	**6/19/13**
Chemical Name																
Volatile Organic Compounds (mg/kg)																
1,1,1-Trichloroethane	0.0013 U	0.001 U	0.0008 U	0.0012 U	0.0012 U	0.001 U	0.0012 U	0.001 U	0.0012 U	0.001 U	0.001 U	0.0013 U	0.0011 U	0.0012 U	0.0009 U	0.001 U
1,1,2,2-Tetrachloroethane	0.0013 U	0.001 U	0.0008 U	0.0012 U	0.0012 U	0.001 U	0.0012 U	0.001 U	0.0012 U	0.001 U	0.001 U	0.0013 U	0.0011 U	0.0012 U	0.0009 U	0.001 U
1,1,2-Trichloro-1,2,2-trifluoroethane (Freon-113)	0.0013 U	0.001 U	0.0008 U	0.0012 U	0.0012 U	0.001 U	0.0012 U	0.001 U	0.0012 U	0.001 U	0.001 U	0.0013 U	0.0011 U	0.0012 U	0.0009 U	0.001 U
1,1,2-Trichloroethane	0.0013 U	0.001 U	0.0008 U	0.0012 U	0.0012 U	0.001 U	0.0012 U	0.001 U	0.0012 U	0.001 U	0.001 U	0.0013 U	0.0011 U	0.0012 U	0.0009 U	0.001 U
1,1-Dichloroethane	0.0013 U	0.001 U	0.0008 U	0.0012 U	0.0012 U	0.001 U	0.0012 U	0.001 U	0.0012 U	0.001 U	0.001 U	0.0013 U	0.0011 U	0.0012 U	0.0009 U	0.001 U
1,1-Dichloroethene	0.0013 U	0.001 U	0.0008 U	0.0012 U	0.0012 U	0.001 U	0.0012 U	0.001 U	0.0012 U	0.001 U	0.001 U	0.0013 U	0.0011 U	0.0012 U	0.0009 U	0.001 U
1,2,3-Trichlorobenzene	0.0013 U	0.001 U	0.0008 U	0.0012 U	0.0012 U	0.001 U	0.0012 U	0.001 U	0.0012 U	0.001 U	0.001 U	0.0013 U	0.0011 U	0.0012 U	0.0009 U	0.001 U
1,2,4-Trichlorobenzene	0.0013 U	0.001 U	0.0008 U	0.0012 U	0.0012 U	0.001 U	0.0012 U	0.001 U	0.0012 U	0.001 U	0.001 U	0.0013 U	0.0011 U	0.0012 U	0.0009 U	0.001 U
1,2-Dibromo-3-chloropropane	0.0013 U	0.001 U	0.0008 U	0.0012 U	0.0012 U	0.001 U	0.0012 U	0.001 U	0.0012 U	0.001 U	0.001 U	0.0013 U	0.0011 U	0.0012 U	0.0009 U	0.001 U
1,2-Dibromoethane	0.0013 U	0.001 U	0.0008 U	0.0012 U	0.0012 U	0.001 U	0.0012 U	0.001 U	0.0012 U	0.001 U	0.001 U	0.0013 U	0.0011 U	0.0012 U	0.0009 U	0.001 U
1,2-Dichlorobenzene	0.0013 U	0.001 U	0.0008 U	0.0012 U	0.0012 U	0.001 U	0.0012 U	0.001 U	0.0012 U	0.001 U	0.001 U	0.0013 U	0.0011 U	0.0012 U	0.0009 U	0.001 U
1,2-Dichloroethane	0.0013 U	0.001 U	0.0008 U	0.0012 U	0.0012 U	0.001 U	0.0012 U	0.001 U	0.0012 U	0.001 U	0.001 U	0.0013 U	0.0011 U	0.0012 U	0.0009 U	0.001 U
1,2-Dichloropropane	0.0013 U	0.001 U	0.0008 U	0.0012 U	0.0012 U	0.001 U	0.0012 U	0.001 U	0.0012 U	0.001 U	0.001 U	0.0013 U	0.0011 U	0.0012 U	0.0009 U	0.001 U
1,3-Dichlorobenzene	0.0013 U	0.001 U	0.0008 U	0.0012 U	0.0012 U	0.001 U	0.0012 U	0.001 U	0.0012 U	0.001 U	0.001 U	0.0013 U	0.0011 U	0.0012 U	0.0009 U	0.001 U
1,4-Dichlorobenzene	0.0013 U	0.001 U	0.0008 U	0.0012 U	0.0012 U	0.001 U	0.0012 U	0.001 U	0.0012 U	0.001 U	0.001 U	0.0013 U	0.0011 U	0.0012 U	0.0009 U	0.001 U
1,4-Dioxane	0.063 U	0.049 U	0.042 U	0.062 U	0.059 U	0.049 U	0.058 U	0.049 U	0.06 U	0.05 U	0.051 U	0.063 U	0.055 U	0.058 U	0.044 U	0.051 U
2-Butanone	0.0031 U	0.0024 U	0.0021 U	0.015	0.0029 U	0.0024 U	0.0029 U	0.0025 U	0.003 U	0.004 J	0.0096	0.0032 U	0.0027 U	0.0029 U	0.0022 U	0.0025 U
2-Hexanone	0.0031 U	0.0024 U	0.0021 U	0.0031 U	0.0029 U	0.0024 U	0.0029 U	0.0025 U	0.003 U	0.0025 U	0.0025 U	0.0032 U	0.0027 U	0.0029 U	0.0022 U	0.0025 U
4-Methyl-2-pentanone	0.0031 U	0.0024 U	0.0021 U	0.0031 U	0.0029 U	0.0024 U	0.0029 U	0.0025 U	0.003 U	0.0025 U	0.0025 U	0.0032 U	0.0027 U	0.0029 U	0.0022 U	0.0025 U
Acetone	0.016 U	0.03	0.011 U	0.073	0.015 U	0.012 U	0.015 U	0.012 U	0.015 U	0.045	0.043	0.016 U	0.0083 J	0.014 U	0.011 U	0.013 U
Benzene	0.0013 U	0.001 U	0.0008 U	0.0022 J	0.0012 U	0.001 U	0.0012 U	0.001 U	0.0012 U	0.001 U	0.001 U	0.0013 U	0.0011 U	0.0012 U	0.0009 U	0.001 U
Bromochloromethane	0.0013 U	0.001 U	0.0008 U	0.0012 U	0.0012 U	0.001 U	0.0012 U	0.001 U	0.0012 U	0.001 U	0.001 U	0.0013 U	0.0011 U	0.0012 U	0.0009 U	0.001 U
Bromodichloromethane	0.0013 U	0.001 U	0.0008 U	0.0012 U	0.0012 U	0.001 U	0.0012 U	0.001 U	0.0012 U	0.001 U	0.001 U	0.0013 U	0.0011 U	0.0012 U	0.0009 U	0.001 U
Bromoform	0.0013 U	0.001 U	0.0008 U	0.0012 U	0.0012 U	0.001 U	0.0012 U	0.001 U	0.0012 U	0.001 U	0.001 U	0.0013 U	0.0011 U	0.0012 U	0.0009 U	0.001 U
Bromomethane	0.0063 U	0.0049 U	0.0042 U	0.0062 U	0.0059 U	0.0049 U	0.0058 U	0.0049 U	0.006 U	0.005 U	0.0051 U	0.0063 U	0.0055 U	0.0058 U	0.0044 U	0.0051 U
Carbon disulfide	0.0063 U	0.0049 U	0.0042 U	0.0062 U	0.0059 U	0.0049 U	0.0058 U	0.0049 U	0.006 U	0.005 U	0.0051 U	0.0063 U	0.0055 U	0.0058 U	0.0044 U	0.0051 U
Carbon tetrachloride	0.0013 U	0.001 U	0.0008 U	0.0012 U	0.0012 U	0.001 U	0.0012 U	0.001 U	0.0012 U	0.001 U	0.001 U	0.0013 U	0.0011 U	0.0012 U	0.0009 U	0.001 U
Chlorobenzene	0.0013 U	0.001 U	0.0008 U	0.0012 U	0.0012 U	0.001 U	0.0012 U	0.001 U	0.0012 U	0.001 U	0.001 U	0.0013 U	0.0011 U	0.0012 U	0.0009 U	0.001 U
Chloroethane	0.0013 U	0.001 U	0.0008 U	0.0012 U	0.0012 U	0.001 U	0.0012 U	0.001 U	0.0012 U	0.001 U	0.001 U	0.0013 U	0.0011 U	0.0012 U	0.0009 U	0.001 U
Chloroform	0.0013 U	0.001 U	0.0008 U	0.0012 U	6.00E-04 J	0.001 U	0.0012 U	0.001 U	0.0012 U	0.001 U	0.001 U	0.0013 U	0.0011 U	0.0012 U	0.0009 U	0.001 U
Chloromethane	0.0013 U	0.001 U	0.0008 U	0.0012 U	0.0012 U	0.001 U	0.0012 U	0.001 U	0.0012 U	0.001 U	0.001 U	0.0013 U	0.0011 U	0.0012 U	0.0009 U	0.001 U
cis-1,2-Dichloroethene	0.0013 U	0.001 U	0.0008 U	0.0012 U	0.0012 U	0.001 U	0.0012 U	0.001 U	0.0012 U	0.001 U	0.001 U	0.0013 U	0.0011 U	0.0012 U	0.0009 U	0.001 U
cis-1,3-Dichloropropene	0.0013 U	0.001 U	0.0008 U	0.0012 U	0.0012 U	0.001 U	0.0012 U	0.001 U	0.0012 U	0.001 U	0.001 U	0.0013 U	0.0011 U	0.0012 U	0.0009 U	0.001 U
Cyclohexane	0.0013 U	0.001 U	0.0008 U	0.0012 U	0.0012 U	0.001 U	0.0012 U	0.001 U	0.0012 U	0.001 U	0.001 U	0.0013 U	0.0011 U	0.0012 U	0.0009 U	0.001 U
Dibromochloromethane	0.0013 U	0.001 U	0.0008 U	0.0012 U	0.0012 U	0.001 U	0.0012 U	0.001 U	0.0012 U	0.001 U	0.001 U	0.0013 U	0.0011 U	0.0012 U	0.0009 U	0.001 U
Dichlorodifluoromethane (Freon-12)	0.0013 U	0.001 U	0.0008 U	0.0012 U	0.0012 U	0.001 U	0.0012 U	0.001 U	0.0012 U	0.001 U	0.001 U	0.0013 U	0.0011 U	0.002 J	0.0009 U	0.001 U
Ethylbenzene	0.0013 U	0.001 U	0.0008 U	0.0032	0.0012 U	0.001 U	0.0012 U	0.001 U	0.0012 U	0.001 U	0.001 U	0.0013 U	0.0011 U	0.0012 U	0.0009 U	0.001 U
Isopropylbenzene	0.0013 U	0.001 U	0.0008 U	0.0017 J	0.0012 U	0.001 U	0.0012 U	0.001 U	0.0012 U	0.001 U	0.001 U	0.0013 U	0.0011 U	0.0012 U	0.0009 U	0.001 U
m- and p-Xylene	0.0025 U	0.002 U	0.0017 U	0.0065	0.0023 U	0.0019 U	0.0023 U	0.002 U	0.0024 U	0.002 U	0.002 U	0.0025 U	0.0022 U	0.0023 U	0.0017 U	0.002 U
Methyl acetate	0.0063 U	0.0049 U	0.0042 U	0.0062 U	0.0059 U	0.0049 U	0.0058 U	0.0049 U	0.006 U	0.005 U	0.0051 U	0.0063 U	0.0055 U	0.0058 U	0.0044 U	0.0051 U
Methylcyclohexane	0.0013 U	0.001 U	0.0008 U	0.0012 U	0.0012 U	0.001 U	0.0012 U	0.001 U	0.0012 U	0.001 U	0.001 U	0.0013 U	0.0011 U	0.0012 U	0.0009 U	0.001 U
Methylene chloride	0.0063 U	0.0049 U	0.0042 U	0.0062 U	0.0059 U	0.0049 U	0.0058 U	0.0049 U	0.006 U	0.005 U	0.0051 U	0.0063 U	0.0055 U	0.0058 U	0.0044 U	0.0051 U
Methyl-tert-butyl ether (MTBE)	0.0013 U	0.001 U	0.0008 U	0.0012 U	0.0012 U	0.001 U	0.0012 U	0.001 U	0.0012 U	0.001 U	0.001 U	0.0013 U	0.0011 U	0.0012 U	0.0009 U	0.001 U
o-Xylene	0.0013 U	0.001 U	0.0008 U	0.0057	0.0012 U	0.001 U	0.0012 U	0.001 U	0.0012 U	0.001 U	0.001 U	0.0013 U	0.0011 U	0.0012 U	0.0009 U	0.001 U
Styrene	0.0013 U	0.001 U	0.0008 U	0.0012 U	0.0012 U	0.001 U	9.00E-04 J	0.001 U	0.0012 U	0.001 U	0.001 U	0.0013 U	0.0011 U	0.0012 U	0.0009 U	0.001 U
Tetrachloroethene	0.0013 U	0.001 U	0.0008 U	0.0012 U	0.0012 U	0.001 U	0.0012 U	0.001 U	0.0012 U	0.001 U	0.001 U	0.0013 U	0.0011 U	0.0012 U	0.0009 U	0.001 U
Toluene	0.0013 U	0.001 U	0.0008 U	0.0014 J	0.0012 U	0.001 U	0.0012 U	0.001 U	0.0012 U	0.001 U	0.0011 J	0.0013 U	0.0011 U	0.0012 U	0.0009 U	0.001 U
trans-1,2-Dichloroethene	0.0013 U	0.001 U	0.0008 U	0.0012 U	0.0012 U	0.001 U	0.0012 U	0.001 U	0.0012 U	0.001 U	0.001 U	0.0013 U	0.0011 U	0.0012 U	0.0009 U	0.001 U
trans-1,3-Dichloropropene	0.0013 U	0.001 U	0.0008 U	0.0012 U	0.0012 U	0.001 U	0.0012 U	0.001 U	0.0012 U	0.001 U	0.001 U	0.0013 U	0.0011 U	0.0012 U	0.0009 U	0.001 U
Trichloroethene	0.0013 U	0.001 U	0.0008 U	0.0012 U	0.0012 U	0.001 U	0.0012 U	0.001 U	0.0012 U	0.001 U	0.001 U	0.0013 U	0.0011 U	0.0012 U	0.0009 U	0.001 U
Trichlorofluoromethane (Freon-11)	0.0013 U	0.001 U	0.0008 U	0.0012 U	0.0012 U	0.001 U	0.0012 U	0.001 U	0.0012 U	0.001 U	0.001 U	0.0029	0.0011 U	0.0027	0.0009 U	0.001 U
Vinyl chloride	0.0013 U	0.001 U	0.0008 U	0.0012 U	0.0012 U	0.001 U	0.0012 U	0.001 U	0.0012 U	0.001 U	0.001 U	0.0013 U	0.0011 U	0.0012 U	0.0009 U	0.001 U
Xylene, total	0.0025 U	0.002 U	0.0017 U	0.012	0.0023 U	0.0019 U	0.0023 U	0.002 U	0.0024 U	0.002 U	0.002 U	0.0025 U	0.0022 U	0.0023 U	0.0017 U	0.002 U
Semivolatile Organic Compounds (mg/kg)																
1,1-Biphenyl	0.13 U	0.13 U	0.12 U	0.28 UD	0.13 U	0.12 U	0.23 UD	0.13 U	0.26 UD	0.13 U	0.12 U	0.13 U	0.24 UD	0.13 U	0.12 U	0.12 U
1,2,4,5-Tetrachlorobenzene	0.13 U	0.13 U	0.12 UQ	0.28 UDQ	0.13 UQ	0.12 UQ	0.23 UDQ	0.13 UQ	0.26 UDQ	0.13 UQ	0.12 UQ	0.13 UQ	0.24 UDQ	0.13 UQ	0.12 UQ	0.12 UQ
2,2'-Oxybis(1-chloropropane)	0.13 U	0.13 U	0.12 U	0.28 UD	0.13 U	0.12 U	0.23 UD	0.13 U	0.26 UD	0.13 U	0.12 U	0.13 U	0.24 UD	0.13 U	0.12 U	0.12 U
2,3,4,6-Tetrachlorophenol	0.25 UQ	0.25 UQ	0.23 U	0.55 UD	0.26 U	0.25 U	0.47 UD	0.25 U	0.53 UD	0.26 U	0.24 U	0.25 U	0.48 UD	0.26 U	0.24 U	0.25 U
2,4,5-Trichlorophenol	0.13 U	0.13 U	0.12 U	0.28 UD	0.13 U	0.12 U	0.23 UD	0.13 U	0.26 UD	0.13 U	0.12 U	0.13 U	0.24 UD	0.13 U	0.12 U	0.12 U
2,4,6-Trichlorophenol	0.13 U	0.13 U	0.12 U	0.28 UD	0.13 U	0.12 U	0.23 UD	0.13 U	0.26 UD	0.13 U	0.12 U	0.13 U	0.24 UD	0.13 U	0.12 U	0.12 U
2,4-Dichlorophenol	0.13 U	0.13 U	0.12 U	0.28 UD	0.13 U	0.12 U	0.23 UD	0.13 U	0.26 UD	0.13 U	0.12 U	0.13 U	0.24 UD	0.13 U	0.12 U	0.12 U
2,4-Dimethylphenol	0.13 UQ	0.13 UQ	0.12 U	0.28 UD	0.13 U	0.12 U	0.23 UD	0.13 U	0.26 UD	0.13 U	0.12 U	0.13 U	0.24 UD	0.13 U	0.12 U	0.12 U
2,4-Dinitrophenol	0.38 U	0.38 U	0.35 U	0.83 UD	0.39 U	0.37 U	0.7 UD	0.38 U	0.79 UD	0.39 U	0.36 U	0.38 U	0.72 UD	0.38 U	0.36 U	0.37 U
2,4-Dinitrotoluene	0.13 U	0.13 U	0.12 U	0.28 UD	0.13 U	0.12 U	0.23 UD	0.13 U	0.26 UD	0.13 U	0.12 U	0.13 U	0.24 UD	0.13 U	0.12 U	0.12 U
2,6-Dinitrotoluene	0.13 U	0.13 U	0.12 U	0.28 UD	0.13 U	0.12 U	0.23 UD	0.13 U	0.26 UD	0.13 U	0.12 U	0.13 U	0.24 UD	0.13 U	0.12 U	0.12 U
2-Chloronaphthalene	0.13 U	0.13 U	0.12 U	0.28 UD	0.13 U	0.12 U	0.23 UD	0.13 U	0.26 UD	0.13 U	0.12 U	0.13 U	0.24 UD	0.13 U	0.12 U	0.12 U
2-Chlorophenol	0.13 U	0.13 U	0.12 U	0.28 UD	0.13 U	0.12 U	0.23 UD	0.13 U	0.26 UD	0.13 U	0.12 U	0.13 U	0.24 UD	0.13 U	0.12 U	0.12 U
2-Methylnaphthalene	0.042 J	0.032 U	0.029 U	0.77	0.033 U	0.031 U	0.029 U	0.032 U	0.033 U	0.033 U	0.03 U	0.032 U	0.03 U	0.032 U	0.03 U	0.031 U
2-Methylphenol	0.13 U	0.13 U	0.12 U	0.28 UD	0.13 U	0.12 U	0.23 UD	0.13 U	0.26 UD	0.13 U	0.12 U	0.13 U	0.24 UD	0.13 U	0.12 U	0.12 U
2-Nitroaniline	0.13 U	0.13 U	0.12 U	0.28 UD	0.13 U	0.12 U	0.23 UD	0.13 U	0.26 UD	0.13 U	0.12 U	0.13 U	0.24 UD	0.13 U	0.12 U	0.12 U
2-Nitrophenol	0.13 U	0.13 U	0.12 U	0.28 UD	0.13 U	0.12 U	0.23 UD	0.13 U	0.26 UD	0.13 U	0.12 U	0.13 U	0.24 UD	0.13 U	0.12 U	0.12 U
3- and 4-Methylphenol	0.25 U	0.25 U	0.23 U	0.55 UD	0.26 U	0.25 U	0.47 UD	0.25 U	0.53 UD	0.26 U	0.24 U	0.25 U	0.48 UD	0.26 U	0.24 U	0.25 U
3,3'-Dichlorobenzidine	0.13 U	0.13 U	0.12 U	0.28 UD	0.13 U	0.12 U	0.23 UDQ	0.13 U	0.26 UDQ	0.13 U	0.12 U	0.13 U	0.24 UD	0.13 U	0.12 U	0.12 U
3-Nitroaniline	0.13 U	0.13 U	0.12 U	0.28 UD	0.13 U	0.12 U	0.23 UD	0.13 U	0.26 UD	0.13 U	0.12 U	0.13 U	0.24 UD	0.13 U	0.12 U	0.12 U
4,6-Dinitro-2-methylphenol	0.38 U	0.38 U	0.35 U	0.83 UD	0.39 U	0.37 U	0.7 UD	0.38 U	0.79 UD	0.39 U	0.36 U	0.38 U	0.72 UD	0.38 U	0.36 U	0.37 U
4-Bromophenyl-phenylether	0.13 U	0.13 U	0.12 U	0.28 UD	0.13 U	0.12 U	0.23 UD	0.13 U	0.26 UD	0.13 U	0.12 U	0.13 U	0.24 UD	0.13 U	0.12 U	0.12 U
4-Chloro-3-methylphenol	0.13 U	0.13 U	0.12 U	0.28 UD	0.13 U	0.12 U	0.23 UD	0.13 U	0.26 UD	0.13 U	0.12 U	0.13 U	0.24 UD	0.13 U	0.12 U	0.12 U
4-Chloroaniline	0.13 UQ	0.13 UQ	0.12 U	0.28 UD	0.13 U	0.12 U	0.23 UD	0.13 U	0.26 UD	0.13 U	0.12 U	0.13 U	0.24 UD	0.13 U	0.12 U	0.12 U
4-Chlorophenyl-phenylether	0.13 U	0.13 U	0.12 U	0.28 UD	0.13 U	0.12 U	0.23 UD	0.13 U	0.26 UD	0.13 U	0.12 U	0.13 U	0.24 UD	0.13 U	0.12 U	0.12 U
4-Nitroaniline	0.13 U	0.13 U	0.12 U	0.28 UD	0.13 U	0.12 U	0.23 UD	0.13 U	0.26 UD	0.13 U	0.12 U	0.13 U	0.24 UD	0.13 U	0.12 U	0.12 U
4-Nitrophenol	0.13 U	0.13 U	0.12 U	0.28 UD	0.13 U	0.12 U	0.23 UD	0.13 U	0.26 UD	0.13 U	0.12 U	0.13 U	0.24 UD	0.13 U	0.12 U	0.12 U

TABLE B-5

Phase I Subsurface Soil Raw Analytical Results - 2nd Street Disposal Area

TRDA Remedial Investigation Report

Harvey Point Defense Testing Activity

Hertford, North Carolina

Sample ID	TR-2ND-SB01-0.5-01-0613	TR-2ND-SB01-06-08-0613	TR-2ND-SB02-0.5-1-0613	TR-2ND-SB02-06-08-0613	TR-2ND-SB03-0.5-01-0613	TR-2ND-SB03-04-06-0613	TR-2ND-SB04-0.5-01-0613	TR-2ND-SB04-04-06-0613	TR-2ND-SB05-0.5-01-0613	TR-2ND-SB05-03-05-0613	TR-2ND-SB06-0.5-01-0613	TR-2ND-SB06-05-07-0613	TR-2ND-SB06D-0.5-01-0613	TR-2ND-SB06D-05-07-0613	TR-2ND-SB07-0.5-01-0613	TR-2ND-SB07-04-06-0613
Sample Date	**6/11/13**	**6/11/13**	**6/19/13**	**6/19/13**	**6/19/13**	**6/19/13**	**6/19/13**	**6/19/13**	**6/19/13**	**6/19/13**	**6/19/13**	**6/19/13**	**6/19/13**	**6/19/13**	**6/19/13**	**6/19/13**
Chemical Name																
Acenaphthene	0.05	0.03 J	0.029 U	0.36	0.033 U	0.031 U	0.029 U	0.032 U	0.033 U	0.033 U	0.03 U	0.032 U	0.03 U	0.032 U	0.03 U	0.031 U
Acenaphthylene	0.057	0.032 J	0.029 U	0.035 U	0.033 U	0.031 U	0.029 U	0.032 U	0.033 U	0.033 U	0.03 U	0.032 U	0.03 U	0.032 U	0.03 U	0.031 U
Acetophenone	0.13 U	0.13 U	0.12 U	0.28 UD	0.13 U	0.12 U	0.23 UD	0.13 U	0.26 UD	0.13 U	0.12 U	0.13 U	0.24 UD	0.13 U	0.12 U	0.12 U
Anthracene	0.047	0.022 J	0.029 U	0.34	0.033 U	0.031 U	0.029 U	0.032 U	0.033 U	0.033 U	0.03 U	0.032 U	0.03 U	0.032 U	0.03 U	0.031 U
Atrazine	0.13 UQ	0.13 UQ	0.12 U	0.28 UD	0.13 U	0.12 U	0.23 UD	0.13 U	0.26 UD	0.13 U	0.12 U	0.13 U	0.24 UD	0.13 U	0.12 U	0.12 U
Benzaldehyde	0.13 U	0.13 U	0.12 U	0.28 UD	0.13 U	0.12 U	0.23 UD	0.13 U	0.26 UD	0.13 U	0.12 U	0.13 U	0.24 UD	0.13 U	0.12 U	0.12 U
Benzo(a)anthracene	0.085	0.032 U	0.029 U	0.42	0.033 U	0.031 U	0.019 J	0.078	0.066	0.021 J	0.03 U	0.032 U	0.03 U	0.032 U	0.03 U	0.031 U
Benzo(a)pyrene	0.08	0.032 U	0.029 U	0.19	0.033 U	0.031 U	0.029 U	0.073	0.064	0.033 U	0.03 U	0.032 U	0.03 U	0.032 U	0.03 U	0.031 U
Benzo(b)fluoranthene	0.13	0.032 U	0.029 U	0.35	0.033 U	0.031 U	0.04 J	0.063	0.064	0.033 U	0.03 U	0.032 U	0.03 U	0.032 U	0.03 U	0.031 U
Benzo(g,h,i)perylene	0.07	0.032 U	0.029 U	0.064	0.033 U	0.031 U	0.029 U	0.066	0.061	0.033 U	0.03 U	0.032 U	0.03 U	0.032 U	0.03 U	0.031 U
Benzo(k)fluoranthene	0.085	0.032 U	0.029 U	0.2	0.033 U	0.031 U	0.029 U	0.11	0.093	0.032 J	0.03 U	0.032 U	0.03 U	0.032 U	0.03 U	0.031 U
bis(2-Chloroethoxy)methane	0.13 U	0.13 U	0.12 U	0.28 UD	0.13 U	0.12 U	0.23 UD	0.13 U	0.26 UD	0.13 U	0.12 U	0.13 U	0.24 UD	0.13 U	0.12 U	0.12 U
bis(2-Chloroethyl)ether	0.13 U	0.13 U	0.12 U	0.28 UD	0.13 U	0.12 U	0.23 UD	0.13 U	0.26 UD	0.13 U	0.12 U	0.13 U	0.24 UD	0.13 U	0.12 U	0.12 U
bis(2-Ethylhexyl)phthalate	0.13 U	0.13 U	0.12 U	0.28 UD	0.13 U	0.12 U	0.25 JDQ	0.27 J	0.26 UDQ	0.13 U	0.12 U	0.13 U	0.27 JD	0.13 U	0.51	0.12 U
Butylbenzylphthalate	0.13 U	0.13 U	0.12 U	0.28 UD	0.13 U	0.12 U	0.23 UD	0.13 U	0.26 UD	0.13 U	0.12 U	0.13 U	0.24 UD	0.13 U	0.12 U	0.12 U
Caprolactam	0.25 UQ	0.25 UQ	0.23 U	0.55 UD	0.26 U	0.25 U	0.47 UD	0.25 U	0.53 UD	0.26 U	0.24 U	0.25 U	0.48 UD	0.26 U	0.24 U	0.25 U
Carbazole	0.13 U	0.13 U	0.12 U	0.28 UD	0.13 U	0.12 U	0.23 UD	0.13 U	0.26 UD	0.13 U	0.12 U	0.13 U	0.24 UD	0.13 U	0.12 U	0.12 U
Chrysene	0.11	0.015 J	0.029 U	0.41	0.033 U	0.015 J	0.023 J	0.086	0.074	0.024 J	0.03 U	0.032 U	0.03 U	0.032 U	0.03 U	0.031 U
Dibenz(a,h)anthracene	0.031 U	0.032 U	0.029 U	0.035 U	0.033 U	0.031 U	0.029 U	0.058	0.045 J	0.033 U	0.03 U	0.032 U	0.03 U	0.032 U	0.03 U	0.031 U
Dibenzofuran	0.13 U	0.13 U	0.12 U	0.46 JD	0.13 U	0.12 U	0.23 UD	0.13 U	0.26 UD	0.13 U	0.12 U	0.13 U	0.24 UD	0.13 U	0.12 U	0.12 U
Diethylphthalate	0.13 U	0.13 U	0.12 U	0.28 UD	0.13 U	0.12 U	0.23 UD	0.13 U	0.26 UD	0.13 U	0.12 U	0.13 U	0.24 UD	0.13 U	0.12 U	0.12 U
Dimethyl phthalate	0.13 U	0.13 U	0.12 U	0.28 UD	0.13 U	0.12 U	0.23 UD	0.13 U	0.26 UD	0.13 U	0.12 U	0.13 U	0.24 UD	0.13 U	0.12 U	0.12 U
Di-n-butylphthalate	0.13 UQ	0.13 UQ	0.12 U	0.28 UD	0.13 U	0.12 U	0.23 UD	0.13 U	0.26 UD	0.13 U	0.12 U	0.13 U	0.24 UD	0.13 U	0.12 U	0.12 U
Di-n-octylphthalate	0.13 U	0.13 U	0.12 U	0.28 UD	0.13 U	0.12 U	0.23 UDQ	0.13 U	0.26 UDQ	0.13 U	0.12 U	0.13 U	0.24 UD	0.13 U	0.12 U	0.12 U
Fluoranthene	0.13	0.032 U	0.029 U	0.99	0.033 U	0.031 U	0.023 J	0.078	0.072	0.026 J	0.03 U	0.032 U	0.03 U	0.032 U	0.03 U	0.031 U
Fluorene	0.04 J	0.022 J	0.029 U	0.4	0.033 U	0.031 U	0.029 U	0.023 J	0.033 U	0.033 U	0.03 U	0.032 U	0.03 U	0.032 U	0.03 U	0.031 U
Hexachlorobenzene	0.13 U	0.13 U	0.12 U	0.28 UD	0.13 U	0.12 U	0.23 UD	0.13 U	0.26 UD	0.13 U	0.12 U	0.13 U	0.24 UD	0.13 U	0.12 U	0.12 U
Hexachlorobutadiene	0.13 U	0.13 U	0.12 U	0.28 UD	0.13 U	0.12 U	0.23 UD	0.13 U	0.26 UD	0.13 U	0.12 U	0.13 U	0.24 UD	0.13 U	0.12 U	0.12 U
Hexachlorocyclopentadiene	0.13 U	0.13 U	0.12 U	0.28 UD	0.13 U	0.12 U	0.23 UD	0.13 U	0.26 UD	0.13 U	0.12 U	0.13 U	0.24 UD	0.13 U	0.12 U	0.12 U
Hexachloroethane	0.13 U	0.13 U	0.12 U	0.28 UD	0.13 U	0.12 U	0.23 UD	0.13 U	0.26 UD	0.13 U	0.12 U	0.13 U	0.24 UD	0.13 U	0.12 U	0.12 U
Indeno(1,2,3-cd)pyrene	0.055	0.032 U	0.029 U	0.064	0.033 U	0.031 U	0.029 U	0.053	0.048	0.033 U	0.03 U	0.032 U	0.03 U	0.032 U	0.03 U	0.031 U
Isophorone	0.13 U	0.13 U	0.12 U	0.28 UD	0.13 U	0.12 U	0.23 UD	0.13 U	0.26 UD	0.13 U	0.12 U	0.13 U	0.24 UD	0.13 U	0.12 U	0.12 U
Naphthalene	0.065	0.037 J	0.029 U	4.1	0.033 U	0.031 U	0.029 U	0.032 U	0.033 U	0.033 U	0.03 U	0.032 U	0.03 U	0.032 U	0.03 U	0.031 U
Nitrobenzene	0.13 U	0.13 U	0.12 U	0.28 UD	0.13 U	0.12 U	0.23 UD	0.13 U	0.26 UD	0.13 U	0.12 U	0.13 U	0.24 UD	0.13 U	0.12 U	0.12 U
n-Nitroso-di-n-propylamine	0.13 U	0.13 U	0.12 U	0.28 UD	0.13 U	0.12 U	0.23 UD	0.13 U	0.26 UD	0.13 U	0.12 U	0.13 U	0.24 UD	0.13 U	0.12 U	0.12 U
n-Nitrosodiphenylamine	0.25 U	0.25 U	0.23 U	0.55 UD	0.26 U	0.25 U	0.47 UD	0.25 U	0.53 UD	0.26 U	0.24 U	0.25 U	0.48 UD	0.26 U	0.24 U	0.25 U
Pentachlorophenol	0.38 U	0.38 U	0.35 U	0.83 UD	0.39 U	0.37 U	0.7 UD	0.38 U	0.79 UD	0.39 U	0.36 U	0.38 U	0.72 UD	0.38 U	0.36 U	0.37 U
Phenanthrene	0.1	0.032 U	0.029 U	1.4	0.033 U	0.031 U	0.029 U	0.073	0.058	0.033 U	0.03 U	0.032 U	0.03 U	0.032 U	0.03 U	0.031 U
Phenol	0.13 U	0.13 U	0.12 U	0.28 UD	0.13 U	0.12 U	0.23 UD	0.13 U	0.26 UD	0.13 U	0.12 U	0.13 U	0.24 UD	0.13 U	0.12 U	0.12 U
Pyrene	0.13	0.032 U	0.029 U	0.74	0.033 U	0.031 U	0.03 J	0.086	0.074	0.026 J	0.03 U	0.032 U	0.03 U	0.032 U	0.03 U	0.031 U
Pesticide/Polychlorinated Biphenyls (mg/kg)																
4,4'-DDD	0.0025 UD	0.0013 U	0.0012 U	0.0014 U	0.0013 U	0.0012 U	0.0023 UD	0.0013 U	0.0026 UD	0.0013 U	0.0012 U	0.0013 U	0.0024 UD	0.0013 U	0.0012 U	0.0012 U
4,4'-DDE	0.0025 UDQ	0.0013 UQ	0.0012 U	0.0014 U	0.0013 U	0.0012 U	0.0023 UD	0.0013 U	0.0026 UD	0.0013 U	0.0012 U	0.0013 U	0.0024 UD	0.0013 U	0.0012 U	0.0012 U
4,4'-DDT	0.0025 UD	0.0013 U	0.0012 U	0.0014 U	0.0013 U	0.0012 U	0.0023 UD	0.0013 U	0.0026 UD	0.0013 U	0.0012 U	0.0013 U	0.0024 UD	0.0013 U	0.0012 U	0.0012 U
Aldrin	0.0025 UD	0.0013 U	0.0012 U	0.0014 U	0.0013 U	0.0012 U	0.0023 UD	0.0013 U	0.0026 UD	0.0013 U	0.0012 U	0.0013 U	0.0024 UD	0.0013 U	0.0012 U	0.0012 U
alpha-BHC	0.0025 UD	0.0013 U	0.0012 U	0.0014 U	0.0013 U	0.0012 U	0.0023 UD	0.0013 U	0.0026 UD	0.0013 U	0.0012 U	0.0013 U	0.0024 UD	0.0013 U	0.0012 U	0.0012 U
alpha-Chlordane	NS	NS	0.0012 U	0.0014 U	0.0013 U	0.0012 U	0.0023 UD	0.0013 U	0.0026 UD	0.0013 U	0.0012 U	0.0013 U	0.0024 UD	0.0013 U	0.0012 U	0.0012 U
Aroclor-1016	0.025 U	0.025 U	0.023 U	0.028 U	0.026 U	0.025 U	0.023 U	0.025 U	0.026 U	0.026 U	0.024 U	0.025 U	0.024 U	0.026 U	0.024 U	0.025 U
Aroclor-1016/1242	0.025 U	0.025 U	0.023 U	0.028 U	0.026 U	0.025 U	0.023 U	0.025 U	0.026 U	0.026 U	0.024 U	0.025 U	0.024 U	0.026 U	0.024 U	0.025 U
Aroclor-1221	0.025 U	0.025 U	0.023 U	0.028 U	0.026 U	0.025 U	0.023 U	0.025 U	0.026 U	0.026 U	0.024 U	0.025 U	0.024 U	0.026 U	0.024 U	0.025 U
Aroclor-1232	0.025 U	0.025 U	0.023 U	0.028 U	0.026 U	0.025 U	0.023 U	0.025 U	0.026 U	0.026 U	0.024 U	0.025 U	0.024 U	0.026 U	0.024 U	0.025 U
Aroclor-1242	0.025 U	0.025 U	0.023 U	0.028 U	0.026 U	0.025 U	0.023 U	0.025 U	0.026 U	0.026 U	0.024 U	0.025 U	0.024 U	0.026 U	0.024 U	0.025 U
Aroclor-1248	0.025 U	0.025 U	0.023 U	0.028 U	0.026 U	0.025 U	0.023 U	0.025 U	0.026 U	0.026 U	0.024 U	0.025 U	0.024 U	0.026 U	0.024 U	0.025 U
Aroclor-1254	0.21	0.025 U	0.023 U	0.76	0.026 U	0.025 U	0.023 U	0.025 U	0.085	0.026 U	0.024 U	0.025 U	0.024 U	0.026 U	0.1 PQ	0.025 U
Aroclor-1260	0.25	0.025 U	0.023 U	0.23	0.026 U	0.025 U	0.4	0.025 U	0.13	0.026 U	0.019 J	0.025 U	0.024 UQ	0.026 U	0.14	0.025 U
Aroclor-1262	0.025 U	0.025 U	0.023 U	0.028 U	0.026 U	0.025 U	0.023 U	0.025 U	0.026 U	0.026 U	0.024 U	0.025 U	0.024 U	0.026 U	0.024 U	0.025 U
Aroclor-1268	0.025 U	0.025 U	0.023 U	0.028 U	0.026 U	0.025 U	0.023 U	0.025 U	0.026 U	0.026 U	0.024 U	0.025 U	0.024 U	0.026 U	0.024 U	0.025 U
beta-BHC	0.0025 UD	0.0013 U	0.0012 U	0.0014 U	0.0013 U	0.0012 U	0.0023 UD	0.0013 U	0.0026 UD	0.0013 U	0.0012 U	0.0013 U	0.0024 UD	0.0013 U	0.0012 U	0.0012 U
delta-BHC	0.0025 UD	0.0013 U	0.0012 U	0.0014 U	0.0013 U	0.0012 U	0.0023 UD	0.0013 U	0.0026 UD	0.0013 U	0.0012 U	0.0013 U	0.0024 UD	0.0013 U	0.0012 U	0.0012 U
Dieldrin	0.0025 UD	0.0013 U	0.0012 U	0.0014 U	0.0013 U	0.0012 U	0.0023 UD	0.0013 U	0.0026 UD	0.0013 U	0.0012 U	0.0013 U	0.0024 UD	0.0013 U	0.0012 U	0.0012 U
Endosulfan I	0.0025 UD	0.0013 U	0.0012 U	0.0014 U	0.0013 U	0.0012 U	0.0023 UD	0.0013 U	0.0026 UD	0.0013 U	0.0012 U	0.0013 U	0.0024 UD	0.0013 U	0.0012 U	0.0012 U
Endosulfan II	0.0025 UD	0.0013 U	0.0012 U	0.0014 U	0.0013 U	0.0012 U	0.0023 UD	0.0013 U	0.0026 UD	0.0013 U	0.0012 U	0.0013 U	0.0024 UD	0.0013 U	0.0012 U	0.0012 U
Endosulfan sulfate	0.0025 UD	0.0013 U	0.0012 U	0.0014 U	0.0013 U	0.0012 U	0.0023 UD	0.0013 U	0.0026 UD	0.0013 U	0.0012 U	0.0013 U	0.0024 UD	0.0013 U	0.0012 U	0.0012 U
Endrin	0.0025 UD	0.0013 U	0.0012 U	0.0014 U	0.0013 U	0.0012 U	0.0023 UD	0.0013 U	0.0026 UD	0.0013 U	0.0012 U	0.0013 U	0.0024 UD	0.0013 U	0.0012 U	0.0012 U
Endrin aldehyde	0.0025 UD	0.0013 U	0.0012 U	0.0014 U	0.0013 U	0.0012 U	0.0023 UD	0.0013 U	0.0026 UD	0.0013 U	0.0012 U	0.0013 U	0.0024 UD	0.0013 U	0.0012 U	0.0012 U
Endrin ketone	0.0025 UD	0.0013 U	0.0012 U	0.0014 U	0.0013 U	0.0012 U	0.0023 UD	0.0013 U	0.0026 UD	0.0013 U	0.0012 U	0.0013 U	0.0024 UD	0.0013 U	0.0012 U	0.0012 U
gamma-BHC (Lindane)	0.0025 UD	0.0013 U	0.0012 U	0.0014 U	0.0013 U	0.0012 U	0.0023 UD	0.0013 U	0.0026 UD	0.0013 U	0.0012 U	0.0013 U	0.0024 UD	0.0013 U	0.0012 U	0.0012 U
gamma-Chlordane	0.0025 UD	0.0013 U	0.0012 U	0.0014 U	0.0013 U	0.0012 U	0.0023 UD	0.0013 U	0.0026 UD	0.0013 U	0.0012 U	0.0013 U	0.0024 UD	0.0013 U	0.0012 U	0.0012 U
Heptachlor	0.0025 UD	0.0013 U	0.0012 U	0.0014 U	0.0013 U	0.0012 U	0.0023 UD	0.0013 U	0.0026 UD	0.0013 U	0.0012 U	0.0013 U	0.0024 UD	0.0013 U	0.0012 U	0.0012 U
Heptachlor epoxide	0.0025 UD	0.0013 U	0.0012 U	0.0014 U	0.0013 U	0.0012 U	0.0023 UD	0.0013 U	0.0026 UD	0.0013 U	0.0012 U	0.0013 U	0.0024 UD	0.0013 U	0.0012 U	0.0012 U
Methoxychlor	0.0025 UD	0.0013 U	0.0012 U	0.0014 U	0.0013 U	0.0012 U	0.0023 UD	0.0013 U	0.0026 UD	0.0013 U	0.0012 U	0.0013 U	0.0024 UD	0.0013 U	0.0012 U	0.0012 U
Toxaphene	0.05 UD	0.025 U	0.023 U	0.028 U	0.026 U	0.025 U	0.047 UD	0.025 U	0.053 UD	0.026 U	0.024 U	0.025 U	0.048 UD	0.026 U	0.024 U	0.025 U
Total Metals (mg/kg)																
Aluminum	18,200	16,900	15,600	10,500	19,300	13,600	20,800	12,500	14,500 D	18,500	12,300	18,600	11,800	17,000	13,000	17,800
Antimony	6.56	1.54 U	1.33 U	7.12	1.3 U	1.24 U	1.34 U	1.64 U	8.95 JD	1.53 U	1.45 U	1.51 U	1.2 U	1.28 U	1.33 U	1.39 U
Arsenic	6.66	2.65 J	3.53	4.92	3.74	3.06	3.49	2.58 J	9.45 JD	3.3	3.1	2.85 J	2.3 J	2.47 J	2.29 J	3.09
Barium	238	47.1	51.6	103	65.3	43.8	114	49.5	251 D	70	72.2	66.9	102	52.9	63	69.5
Beryllium	0.347	0.399	0.384	0.32	0.42	0.287	0.49	0.319	0.317 JD	0.349	0.422	0.502	0.639	0.435	0.409	0.428
Cadmium	3.78	0.0772 U	0.0667 U	2.24	0.0652 U	0.0618 U	1.05	0.264	3.94 D	0.118 J	0.556	0.0753 U	0.0414 J	0.0639 U	0.0665 U	0.0696 U
Calcium	13,800	1,050	1,260	15,900	1,680	1,230	3,530	1,190	22,200 D	1,490	2,110	1,090	1,060	998	576	594
Chromium	71.3	27.9	24.6	21.4	24.2	21.5	26.8	20.7	43.4 D	25.4	17.8	23.5	13.1	22.8	19.4	23.3
Chromium (hexavalent)	0.26 U	1.46	1.8	0.28 U	NS	NS	NS	NS	NS	NS	1.72	2.04	NS	NS	NS	NS
Cobalt	5.9	4.04	3.59	6.86	3.91	3.28	4.82	2.96	5.98 D	3.39	3.53	3.28	3.25	3.21	2.85	3.53
Copper	219	7.35	7.17	96.8	9.13	9.56	77.2	20.6	426 D	30.1	20.1	6.27	2.37	6.47	5.43	7.24
Iron	21,200	11,200	9,210	15,200	8,830	7,540	11,300	8,440	30,100 D	9,400	7,250	8,580	5,920	8,490	6,620	8,470
Lead	375	5.37	7.7	213	6.73	7.82	48.3	22.1	2,110 D	20.3	25.9	7.37	6.71	7.4	6.65	6.07

TABLE B-5

Phase I Subsurface Soil Raw Analytical Results - 2nd Street Disposal Area

TRDA Remedial Investigation Report

Harvey Point Defense Testing Activity

Hertford, North Carolina

Sample ID	TR-2ND-SB01-0.5-01-0613	TR-2ND-SB01-06-08-0613	TR-2ND-SB02-0.5-1-0613	TR-2ND-SB02-06-08-0613	TR-2ND-SB03-0.5-01-0613	TR-2ND-SB03-04-06-0613	TR-2ND-SB04-0.5-01-0613	TR-2ND-SB04-04-06-0613	TR-2ND-SB05-0.5-01-0613	TR-2ND-SB05-03-05-0613	TR-2ND-SB06-0.5-01-0613	TR-2ND-SB06-05-07-0613	TR-2ND-SB06D-0.5-01-0613	TR-2ND-SB06D-05-07-0613	TR-2ND-SB07-0.5-01-0613	TR-2ND-SB07-04-06-0613
Sample Date	**6/11/13**	**6/11/13**	**6/19/13**	**6/19/13**	**6/19/13**	**6/19/13**	**6/19/13**	**6/19/13**	**6/19/13**	**6/19/13**	**6/19/13**	**6/19/13**	**6/19/13**	**6/19/13**	**6/19/13**	**6/19/13**
Chemical Name																
Magnesium	1,780	2,580	2,010	1,620	2,310	2,150	1,870	2,140	1,810 D	2,390	1,300	1,970	1,130	2,000	1,630	2,130
Manganese	401	99.4	77.7	267	81.1	77.6	167	77.3	474 D	94.5	225	114	1,140	119	189	124
Mercury	31 D	0.0113	0.0376	2.54 D	2.12 D	0.153	0.407	0.0926	2.29 D	51.3 D	0.0411	0.0179	0.18	0.0175	0.0326	0.0271
Nickel	25	11.2	9.6	12.2	13.3	10.3	12.9	9.3	27.6 D	13.2	8.78	10.7	7.61	10.1	8.41	10.8
Potassium	737	983	707	968	938	772	826	711	852 D	941	533	643	317	643	579	732
Selenium	1.5 U	1.54 U	1.33 U	1.39 U	1.3 U	1.24 U	1.34 U	1.64 U	6.63 UD	1.53 U	1.45 U	1.51 U	1.2 U	1.28 U	1.33 U	1.39 U
Silver	6.76	0.386 U	0.334 U	1.01	0.326 U	0.309 U	0.143 J	0.328 J	8.87 D	0.383 U	0.363 U	0.376 U	0.3 U	0.32 U	0.333 U	0.348 U
Sodium	98	40.9	59.1	220	74.3	61.8	86.2	56.8	197 D	225	35.7 J	52.8	35.3	52.1	55.6	76.3
Thallium	1.5 U	0.591 J	0.863 J	1.39 U	0.834 J	1.24 U	0.398 J	0.493 J	6.63 UD	0.431 J	1.45 U	0.511 J	1.2 U	1.28 U	0.489 J	0.542 J
Vanadium	19.8	28.6	25.1	19	20.6	18.5	20.6	18.1	18.5 D	20.4	15.9	23.9	12.1	24.5	17.1	21.9
Zinc	1,050	29	22.8	527	22.5	26.7	106	117	1,940 D	670	46	21.4	17.9	21.8	17.4	20.4

Notes:

D - Compound identified in an analysis at a secondary dilution factor

J - Analyte present below the reporting limit

mg/kg - Milligrams per kilogram

NS - Not sampled

P - Indicates a greater than 25% difference of detection between the primary and secondary column.

Q - One or more quality control criteria failed

U - The material was analyzed for, but not detected

TABLE B-6

Phase I Subsurface Soil Raw Analytical Results - 5th Street Disposal Area

TRDA Remedial Investigation Report

Harvey Point Defense Testing Activity

Hertford, North Carolina

Sample ID	TR-5TH-SB01-0.5-01-0613	TR-5TH-SB01-02-04-0613	TR-5TH-SB02-0.5-01-0613	TR-5TH-SB02-02-04-0613	TR-5TH-SB03-0.5-01-0613	TR-5TH-SB03-02-04-0613	TR-5TH-SB04-0.5-01-0613	TR-5TH-SB04-04-06-0613	TR-5TH-SB04D-0.5-01-0613	TR-5TH-SB04D-04-06-0613	TR-5TH-SB05-0.5-01-0613	TR-5TH-SB05-02-04-0613	TR-5TH-SB06-0.5-01-0613	TR-5TH-SB06-04-06-0613
Sample Date	**6/12/13**	**6/12/13**	**6/13/13**	**6/13/13**	**6/17/13**	**6/17/13**	**6/17/13**	**6/17/13**	**6/17/13**	**6/17/13**	**6/18/13**	**6/18/13**	**6/18/13**	**6/18/13**
Chemical Name														
Volatile Organic Compounds (mg/kg)														
1,1,1-Trichloroethane	0.0009 U	0.0009 U	0.0008 U	0.0009 U	0.0014 U	0.0011 U	0.0009 U	0.0011 U	0.0009 U	0.001 U	0.0011 U	0.0009 U	0.0009 U	0.001 U
1,1,2,2-Tetrachloroethane	0.0009 U	0.0009 U	0.0008 U	0.0009 U	0.0014 U	0.0011 U	0.0009 U	0.0011 U	0.0009 U	0.001 U	0.0011 U	0.0009 U	0.0009 U	0.001 U
1,1,2-Trichloro-1,2,2-trifluoroethane (Freon-113)	0.0009 U	0.0009 U	0.0008 U	0.0009 U	0.0014 U	0.0011 U	0.0009 U	0.0011 U	0.0009 U	0.001 U	0.0011 U	0.0009 U	0.0009 U	0.001 U
1,1,2-Trichloroethane	0.0009 U	0.0009 U	0.0008 U	0.0009 U	0.0014 U	0.0011 U	0.0009 U	0.0011 U	0.0009 U	0.001 U	0.0011 U	0.0009 U	0.0009 U	0.001 U
1,1-Dichloroethane	0.0009 U	0.0009 U	0.0008 U	0.0009 U	0.0014 U	0.0011 U	0.0009 U	0.0011 U	0.0009 U	0.001 U	0.0011 U	0.0009 U	0.0009 U	0.001 U
1,1-Dichloroethene	0.0009 U	0.0009 U	0.0008 U	0.0009 U	0.0014 U	0.0011 U	0.0009 U	0.0011 U	0.0009 U	0.001 U	0.0011 U	0.0009 U	0.0009 U	0.001 U
1,2,3-Trichlorobenzene	0.0009 U	0.0009 U	0.0008 U	0.0009 U	0.0014 U	0.0011 U	0.0009 U	0.0011 U	0.0009 U	0.001 U	0.0011 U	0.0009 U	0.0009 U	0.001 U
1,2,4-Trichlorobenzene	0.0009 U	0.0009 U	0.0008 U	0.0009 U	0.0014 U	0.0011 U	0.0009 U	0.0011 U	0.0009 U	0.001 U	0.0011 U	0.0009 U	0.0009 U	0.001 U
1,2-Dibromo-3-chloropropane	0.0009 U	0.0009 U	0.0008 U	0.0009 U	0.0014 U	0.0011 U	0.0009 U	0.0011 U	0.0009 U	0.001 U	0.0011 U	0.0009 U	0.0009 U	0.001 U
1,2-Dibromoethane	0.0009 U	0.0009 U	0.0008 U	0.0009 U	0.0014 U	0.0011 U	0.0009 U	0.0011 U	0.0009 U	0.001 U	0.0011 U	0.0009 U	0.0009 U	0.001 U
1,2-Dichlorobenzene	0.0009 U	0.0009 U	0.0008 U	0.0009 U	0.0014 U	0.0011 U	0.0009 U	0.0011 U	0.0009 U	0.001 U	0.0011 U	0.0009 U	0.0009 U	0.001 U
1,2-Dichloroethane	0.0009 U	0.0009 U	0.0008 U	0.0009 U	0.0014 U	0.0011 U	0.0009 U	0.0011 U	0.0009 U	0.001 U	0.0011 U	0.0009 U	0.0009 U	0.001 U
1,2-Dichloropropane	0.0009 U	0.0009 U	0.0008 U	0.0009 U	0.0014 U	0.0011 U	0.0009 U	0.0011 U	0.0009 U	0.001 U	0.0011 U	0.0009 U	0.0009 U	0.001 U
1,3-Dichlorobenzene	0.0009 U	0.0009 U	0.0008 U	0.0009 U	0.0014 U	0.0011 U	0.0009 U	0.0011 U	0.0009 U	0.001 U	0.0011 U	0.0009 U	0.0009 U	0.001 U
1,4-Dichlorobenzene	0.0009 U	0.0009 U	0.0008 U	0.0009 U	0.0014 U	0.0011 U	0.0009 U	0.0011 U	0.0009 U	0.001 U	0.0011 U	0.0009 U	0.0009 U	0.001 U
1,4-Dioxane	0.046 U	0.045 U	0.042 U	0.043 U	0.068 U	0.055 U	0.044 U	0.053 U	0.044 U	0.051 U	0.057 U	0.046 U	0.044 U	0.051 U
2-Butanone	0.0023 U	0.031	0.0021 U	0.0022 U	0.0034 U	0.0028 U	0.0022 U	0.0026 U	0.0022 U	0.0026 U	0.0028 U	0.0027 J	0.0022 U	0.0025 U
2-Hexanone	0.0023 U	0.0023 U	0.0021 U	0.0022 U	0.0034 U	0.0028 U	0.0022 U	0.0026 U	0.0022 U	0.0026 U	0.0028 U	0.0023 U	0.0022 U	0.0025 U
4-Methyl-2-pentanone	0.0023 U	0.0023 U	0.0021 U	0.0022 U	0.0034 U	0.0028 U	0.0022 U	0.0026 U	0.0022 U	0.0026 U	0.0028 U	0.0023 U	0.0022 U	0.0025 U
Acetone	0.011 U	0.12	0.011 U	0.0062 J	0.017 U	0.014 J	0.011 U	0.013 U	0.011 U	0.013 U	0.014 U	0.014 J	0.011 U	0.013 U
Benzene	0.0009 U	0.0009 U	0.0008 U	0.0009 U	0.0014 U	0.0011 U	7.00E-04 J	0.0011 U	7.00E-04 J	0.001 U	0.0011 U	0.0009 U	0.0009 U	0.001 U
Bromochloromethane	0.0009 U	0.0009 U	0.0008 U	0.0009 U	0.0014 U	0.0011 U	0.0009 U	0.0011 U	0.0009 U	0.001 U	0.0011 U	0.0009 U	0.0009 U	0.001 U
Bromodichloromethane	0.0009 U	0.0009 U	0.0008 U	0.0009 U	0.0014 U	0.0011 U	0.0009 U	0.0011 U	0.0009 U	0.001 U	0.0011 U	0.0009 U	0.0009 U	0.001 U
Bromoform	0.0009 U	0.0009 U	0.0008 U	0.0009 U	0.0014 U	0.0011 U	0.0009 U	0.0011 U	0.0009 U	0.001 U	0.0011 U	0.0009 U	0.0009 U	0.001 U
Bromomethane	0.0046 U	0.0045 U	0.0042 U	0.0043 U	0.0068 U	0.0055 U	0.0044 U	0.0053 U	0.0044 U	0.0051 U	0.0057 U	0.0046 U	0.0044 U	0.0051 U
Carbon disulfide	0.0046 U	0.0045 U	0.0042 U	0.0043 U	0.0068 U	0.0055 U	0.0044 U	0.0053 U	0.0044 U	0.0051 U	0.0057 U	0.0046 U	0.0044 U	0.0051 U
Carbon tetrachloride	0.0009 U	0.0009 U	0.0008 U	0.0009 U	0.0014 U	0.0011 U	0.0009 U	0.0011 U	0.0009 U	0.001 U	0.0011 U	0.0009 U	0.0009 U	0.001 U
Chlorobenzene	0.0009 U	0.0009 U	0.0008 U	0.0009 U	0.0014 U	0.0011 U	0.0009 U	0.0011 U	0.0009 U	0.001 U	0.0011 U	0.0009 U	0.0009 U	0.001 U
Chloroethane	0.0009 U	0.0009 U	0.0008 U	0.0009 U	0.0014 U	0.0011 U	0.0009 U	0.0011 U	0.0009 U	0.001 U	0.0011 U	0.0009 U	0.0009 U	0.001 U
Chloroform	0.0009 U	0.0009 U	0.0008 U	0.0009 U	0.0014 U	0.0011 U	0.0009 U	0.0011 U	0.0009 U	0.001 U	0.0011 U	0.0009 U	0.0009 U	0.001 U
Chloromethane	0.0009 U	0.0009 U	0.0008 U	0.0009 U	0.0014 U	0.0011 U	0.0009 U	0.0011 U	0.0009 U	0.001 U	0.0011 U	0.0009 U	0.0009 U	0.001 U
cis-1,2-Dichloroethene	0.0009 U	0.0009 U	0.0008 U	0.0009 U	0.0014 U	0.0011 U	0.0009 U	0.0011 U	0.0009 U	0.001 U	0.0011 U	0.0009 U	0.0009 U	0.001 U
cis-1,3-Dichloropropene	0.0009 U	0.0009 U	0.0008 U	0.0009 U	0.0014 U	0.0011 U	0.0009 U	0.0011 U	0.0009 U	0.001 U	0.0011 U	0.0009 U	0.0009 U	0.001 U
Cyclohexane	0.0009 U	0.0009 U	0.0008 U	0.0009 U	0.0014 U	0.0011 U	5.00E-04 J	0.0011 U	8.00E-04 J	0.001 U	0.0011 U	0.0009 U	0.0009 U	0.001 U
Dibromochloromethane	0.0009 U	0.0009 U	0.0008 U	0.0009 U	0.0014 U	0.0011 U	0.0009 U	0.0011 U	0.0009 U	0.001 U	0.0011 U	0.0009 U	0.0009 U	0.001 U
Dichlorodifluoromethane (Freon-12)	0.0009 U	0.0009 U	0.0008 U	0.0009 U	0.0014 U	0.0011 U	0.0009 U	0.0011 U	0.0009 U	0.001 U	0.0011 U	0.0009 U	0.0009 U	0.001 U
Ethylbenzene	0.0009 U	0.0009 U	0.0008 U	0.0009 U	0.0014 U	0.0011 U	0.0009 U	0.0011 U	0.0009 U	0.001 U	0.0011 U	0.0009 U	0.0009 U	0.001 U
Isopropylbenzene	0.0009 U	0.0009 U	0.0008 U	0.0009 U	0.0014 U	0.0011 U	0.0009 U	0.0011 U	0.0009 U	0.001 U	0.0011 U	0.0009 U	0.0009 U	0.001 U
m- and p-Xylene	0.0018 U	0.0018 U	0.0017 U	0.0017 U	0.0027 U	0.0022 U	0.0018 U	0.0021 U	0.0017 U	0.002 U	0.0023 U	0.0018 U	0.0017 U	0.002 U
Methyl acetate	0.0046 U	0.0045 U	0.0042 U	0.0043 U	0.0068 U	0.0055 U	0.0044 U	0.0053 U	0.0044 U	0.0051 U	0.0057 U	0.0046 U	0.0044 U	0.0051 U
Methylcyclohexane	0.0009 U	0.0009 U	0.0008 U	0.0009 U	0.0014 U	0.0011 U	0.0009 U	0.0011 U	0.0009 U	0.001 U	0.0011 U	0.0009 U	0.0009 U	0.001 U
Methylene chloride	0.0046 U	0.0045 U	0.0042 U	0.0043 U	0.0068 U	0.0055 U	0.0044 U	0.0053 U	0.0044 U	0.0051 U	0.0057 U	0.0046 U	0.0044 U	0.0051 U
Methyl-tert-butyl ether (MTBE)	0.0009 U	0.0009 U	0.0008 U	0.0009 U	0.0014 U	0.0011 U	0.0009 U	0.0011 U	0.0009 U	0.001 U	0.0011 U	0.0009 U	0.0009 U	0.001 U
o-Xylene	0.0009 U	0.0009 U	0.0008 U	0.0009 U	0.0014 U	0.0011 U	0.0009 U	0.0011 U	0.0009 U	0.001 U	0.0011 U	0.0009 U	0.0009 U	0.001 U
Styrene	0.0009 U	0.0009 U	0.0008 U	0.0009 U	0.0014 U	0.0011 U	0.0009 U	0.0011 U	0.0009 U	0.001 U	0.0011 U	0.0009 U	0.0009 U	0.001 U
Tetrachloroethene	0.0009 U	0.0009 U	0.0008 U	0.0009 U	0.0014 U	0.0011 U	0.0009 U	0.0011 U	0.0009 U	0.001 U	0.0011 U	0.0009 U	0.0009 U	0.001 U
Toluene	0.0009 U	0.0009 U	0.0008 U	0.0009 U	0.0014 U	0.0011 U	0.0018	0.0011 U	0.0018	0.001 U	0.0011 U	0.0009 U	0.0009 U	0.001 U
trans-1,2-Dichloroethene	0.0009 U	0.0009 U	0.0008 U	0.0009 U	0.0014 U	0.0011 U	0.0009 U	0.0011 U	0.0009 U	0.001 U	0.0011 U	0.0009 U	0.0009 U	0.001 U
trans-1,3-Dichloropropene	0.0009 U	0.0009 U	0.0008 U	0.0009 U	0.0014 U	0.0011 U	0.0009 U	0.0011 U	0.0009 U	0.001 U	0.0011 U	0.0009 U	0.0009 U	0.001 U
Trichloroethene	0.0009 U	0.0009 U	0.0008 U	0.0009 U	0.0014 U	0.0011 U	0.0009 U	0.0011 U	0.0009 U	0.001 U	0.0011 U	0.0009 U	0.0009 U	0.001 U
Trichlorofluoromethane (Freon-11)	0.0009 U	0.0009 U	0.0008 U	0.0009 U	0.0014 U	0.0011 U	0.0009 U	0.0011 U	0.0009 U	0.001 U	0.0011 U	0.0009 U	0.0009 U	0.001 U
Vinyl chloride	0.0009 U	0.0009 U	0.0008 U	0.0009 U	0.0014 U	0.0011 U	0.0009 U	0.0011 U	0.0009 U	0.001 U	0.0011 U	0.0009 U	0.0009 U	0.001 U
Xylene, total	0.0018 U	0.0018 U	0.0017 U	0.0017 U	0.0027 U	0.0022 U	0.0018 U	0.0021 U	0.0017 U	0.002 U	0.0023 U	0.0018 U	0.0017 U	0.002 U
Semivolatile Organic Compounds (mg/kg)														
1,1-Biphenyl	0.12 U	0.12 U	0.12 U	0.12 U	0.14 U	0.13 U	0.11 U	0.12 U	0.11 U	0.13 U	0.11 U	0.12 U	0.11 U	0.13 U
1,2,4,5-Tetrachlorobenzene	0.12 U	0.12 U	0.12 U	0.12 U	0.14 U	0.13 U	0.11 U	0.12 U	0.11 U	0.13 U	0.11 UQ	0.12 UQ	0.11 UQ	0.13 UQ
2,2'-Oxybis(1-chloropropane)	0.12 U	0.12 U	0.12 U	0.12 U	0.14 U	0.13 U	0.11 U	0.12 U	0.11 U	0.13 U	0.11 U	0.12 U	0.11 U	0.13 U
2,3,4,6-Tetrachlorophenol	0.23 UQ	0.24 UQ	0.25 UQ	0.24 UQ	0.27 UQ	0.26 UQ	0.22 UQ	0.25 UQ	0.22 UQ	0.25 UQ	0.23 UQ	0.25 U	0.22 U	0.25 U
2,4,5-Trichlorophenol	0.12 U	0.12 U	0.12 U	0.12 U	0.14 U	0.13 U	0.11 U	0.12 U	0.11 U	0.13 U	0.11 U	0.12 U	0.11 U	0.13 U
2,4,6-Trichlorophenol	0.12 U	0.12 U	0.12 U	0.12 U	0.14 U	0.13 U	0.11 U	0.12 U	0.11 U	0.13 U	0.11 U	0.12 U	0.11 U	0.13 U
2,4-Dichlorophenol	0.12 U	0.12 U	0.12 U	0.12 U	0.14 U	0.13 U	0.11 U	0.12 U	0.11 U	0.13 U	0.11 U	0.12 U	0.11 U	0.13 U
2,4-Dimethylphenol	0.12 UQ	0.12 UQ	0.12 UQ	0.12 UQ	0.14 UQ	0.13 UQ	0.11 UQ	0.12 UQ	0.11 UQ	0.13 UQ	0.11 U	0.12 U	0.11 U	0.13 U
2,4-Dinitrophenol	0.35 U	0.37 U	0.37 U	0.37 U	0.41 U	0.39 U	0.34 U	0.37 U	0.34 U	0.38 U	0.34 U	0.37 U	0.33 U	0.38 U
2,4-Dinitrotoluene	0.12 U	0.12 U	0.12 U	0.12 U	0.14 U	0.13 U	0.11 U	0.12 U	0.11 U	0.13 U	0.11 U	0.12 U	0.11 U	0.13 U
2,6-Dinitrotoluene	0.12 U	0.12 U	0.12 U	0.12 U	0.14 U	0.13 U	0.11 U	0.12 U	0.11 U	0.13 U	0.11 U	0.12 U	0.11 U	0.13 U
2-Chloronaphthalene	0.12 U	0.12 U	0.12 U	0.12 U	0.14 U	0.13 U	0.11 U	0.12 U	0.11 U	0.13 U	0.11 U	0.12 U	0.11 U	0.13 U
2-Chlorophenol	0.12 U	0.12 U	0.12 U	0.12 U	0.14 U	0.13 U	0.11 U	0.12 U	0.11 U	0.13 U	0.11 U	0.12 U	0.11 U	0.13 U
2-Methylnaphthalene	0.029 U	0.031 U	0.031 U	0.03 U	0.034 U	0.032 U	0.028 U	0.031 U	0.028 U	0.031 U	0.028 U	0.031 U	0.027 U	0.032 U
2-Methylphenol	0.12 U	0.12 U	0.12 U	0.12 U	0.14 U	0.13 U	0.11 U	0.12 U	0.11 U	0.13 U	0.11 U	0.12 U	0.11 U	0.13 U
2-Nitroaniline	0.12 U	0.12 U	0.12 U	0.12 U	0.14 U	0.13 U	0.11 U	0.12 U	0.11 U	0.13 U	0.11 U	0.12 U	0.11 U	0.13 U
2-Nitrophenol	0.12 U	0.12 U	0.12 U	0.12 U	0.14 U	0.13 U	0.11 U	0.12 U	0.11 U	0.13 U	0.11 U	0.12 U	0.11 U	0.13 U
3- and 4-Methylphenol	0.23 U	0.24 U	0.25 U	0.24 U	0.27 U	0.26 U	0.22 U	0.25 U	0.22 U	0.25 U	0.23 U	0.25 U	0.22 U	0.25 U
3,3'-Dichlorobenzidine	0.12 U	0.12 U	0.12 U	0.12 U	0.14 U	0.13 U	0.11 U	0.12 U	0.11 U	0.13 U	0.11 U	0.12 U	0.11 U	0.13 U
3-Nitroaniline	0.12 U	0.12 U	0.12 U	0.12 U	0.14 U	0.13 U	0.11 U	0.12 U	0.11 U	0.13 U	0.11 U	0.12 U	0.11 U	0.13 U
4,6-Dinitro-2-methylphenol	0.35 U	0.37 U	0.37 U	0.37 U	0.41 U	0.39 U	0.34 U	0.37 U	0.34 U	0.38 U	0.34 U	0.37 U	0.33 U	0.38 U
4-Bromophenyl-phenylether	0.12 U	0.12 U	0.12 U	0.12 U	0.14 U	0.13 U	0.11 U	0.12 U	0.11 U	0.13 U	0.11 U	0.12 U	0.11 U	0.13 U
4-Chloro-3-methylphenol	0.12 U	0.12 U	0.12 U	0.12 U	0.14 U	0.13 U	0.11 U	0.12 U	0.11 U	0.13 U	0.11 U	0.12 U	0.11 U	0.13 U

TABLE B-6

Phase I Subsurface Soil Raw Analytical Results - 5th Street Disposal Area

TRDA Remedial Investigation Report

Harvey Point Defense Testing Activity

Hertford, North Carolina

Sample ID	TR-5TH-SB01-0.5-01-0613	TR-5TH-SB01-02-04-0613	TR-5TH-SB02-0.5-01-0613	TR-5TH-SB02-02-04-0613	TR-5TH-SB03-0.5-01-0613	TR-5TH-SB03-02-04-0613	TR-5TH-SB04-0.5-01-0613	TR-5TH-SB04-04-06-0613	TR-5TH-SB04D-0.5-01-0613	TR-5TH-SB04D-04-06-0613	TR-5TH-SB05-0.5-01-0613	TR-5TH-SB05-02-04-0613	TR-5TH-SB06-0.5-01-0613	TR-5TH-SB06-04-06-0613
Sample Date	**6/12/13**	**6/12/13**	**6/13/13**	**6/13/13**	**6/17/13**	**6/17/13**	**6/17/13**	**6/17/13**	**6/17/13**	**6/17/13**	**6/18/13**	**6/18/13**	**6/18/13**	**6/18/13**
Chemical Name														
4-Chloroaniline	0.12 UQ	0.12 UQ	0.12 UQ	0.12 UQ	0.14 UQ	0.13 UQ	0.11 UQ	0.12 UQ	0.11 UQ	0.13 UQ	0.11 U	0.12 U	0.11 U	0.13 U
4-Chlorophenyl-phenylether	0.12 U	0.12 U	0.12 U	0.12 U	0.14 U	0.13 U	0.11 U	0.12 U	0.11 U	0.13 U	0.11 U	0.12 U	0.11 U	0.13 U
4-Nitroaniline	0.12 U	0.12 U	0.12 U	0.12 U	0.14 U	0.13 U	0.11 U	0.12 U	0.11 U	0.13 U	0.11 U	0.12 U	0.11 U	0.13 U
4-Nitrophenol	0.12 U	0.12 U	0.12 U	0.12 U	0.14 U	0.13 U	0.11 U	0.12 U	0.11 U	0.13 U	0.11 U	0.12 U	0.11 U	0.13 U
Acenaphthene	0.029 U	0.022 J	0.031 U	0.03 U	0.034 U	0.032 U	0.028 U	0.031 U	0.028 U	0.031 U	0.02 J	0.031 U	0.027 U	0.032 U
Acenaphthylene	0.059	0.031 U	0.031 U	0.03 U	0.034 U	0.032 U	0.028 U	0.031 U	0.028 U	0.031 U	0.028 U	0.031 U	0.027 U	0.032 U
Acetophenone	0.12 U	0.12 U	0.12 U	0.12 U	0.14 U	0.13 U	0.11 U	0.12 U	0.11 U	0.13 U	0.11 U	0.12 U	0.11 U	0.13 U
Anthracene	0.057	0.039 J	0.031 U	0.03 U	0.059	0.032 U	0.018 J	0.031 U	0.028 U	0.031 U	0.028 U	0.031 U	0.027 U	0.032 U
Atrazine	0.12 UQ	0.12 UQ	0.12 UQ	0.12 UQ	0.14 UQ	0.13 UQ	0.11 UQ	0.12 UQ	0.11 UQ	0.13 UQ	0.11 UQ	0.12 U	0.11 U	0.13 U
Benzaldehyde	0.12 U	0.12 U	0.12 U	0.12 U	0.14 U	0.13 U	0.11 U	0.12 U	0.11 U	0.13 U	0.11 U	0.12 U	0.11 U	0.13 U
Benzo(a)anthracene	0.081	0.056	0.039 J	0.03 U	0.16	0.032 U	0.025 J	0.031 U	0.038 J	0.031 U	0.077	0.022 J	0.027 U	0.032 U
Benzo(a)pyrene	0.22	0.039 J	0.025 J	0.03 U	0.14	0.032 U	0.028 U	0.031 U	0.056	0.031 U	0.05	0.022 J	0.027 U	0.032 U
Benzo(b)fluoranthene	0.28	0.076	0.052	0.03 U	0.21	0.032 U	0.028 U	0.031 U	0.15	0.031 U	0.084	0.027 J	0.027 U	0.032 U
Benzo(g,h,i)perylene	0.2	0.027 J	0.031 U	0.03 U	0.078	0.032 U	0.028 U	0.031 U	0.065	0.031 U	0.028 U	0.031 U	0.027 U	0.032 U
Benzo(k)fluoranthene	0.13	0.042 J	0.034 J	0.03 U	0.12	0.032 U	0.028 U	0.031 U	0.083	0.031 U	0.048	0.031 U	0.027 U	0.032 U
bis(2-Chloroethoxy)methane	0.12 U	0.12 U	0.12 U	0.12 U	0.14 U	0.13 U	0.11 U	0.12 U	0.11 U	0.13 U	0.11 U	0.12 U	0.11 U	0.13 U
bis(2-Chloroethyl)ether	0.12 U	0.12 U	0.12 U	0.12 U	0.14 U	0.13 U	0.11 U	0.12 U	0.11 U	0.13 U	0.11 U	0.12 U	0.11 U	0.13 U
bis(2-Ethylhexyl)phthalate	0.12 U	0.32 J	0.12 U	0.12 U	0.14 U	0.13 U	0.15 J	0.12 U	0.18 J	0.13 U	0.11 U	0.12 U	0.11 U	0.13 U
Butylbenzylphthalate	0.12 U	0.12 U	0.12 U	0.12 U	0.14 U	0.13 U	0.11 U	0.12 U	0.11 U	0.13 U	0.11 U	0.12 U	0.11 U	0.13 U
Caprolactam	0.23 UQ	0.24 UQ	0.25 UQ	0.24 UQ	0.27 UQ	0.26 UQ	0.22 UQ	0.25 UQ	0.22 UQ	0.25 UQ	0.23 UQ	0.25 U	0.22 U	0.25 U
Carbazole	0.12 U	0.12 U	0.12 U	0.12 U	0.14 U	0.13 U	0.11 U	0.12 U	0.11 U	0.13 U	0.11 U	0.12 U	0.11 U	0.13 U
Chrysene	0.11	0.056	0.047	0.03 U	0.16	0.032 U	0.049	0.031 U	0.087	0.031 U	0.077	0.025 J	0.027 U	0.032 U
Dibenz(a,h)anthracene	0.05	0.031 U	0.031 U	0.03 U	0.034 U	0.032 U	0.028 U	0.031 U	0.028 U	0.031 U	0.028 U	0.031 U	0.027 U	0.032 U
Dibenzofuran	0.12 U	0.12 U	0.12 U	0.12 U	0.14 U	0.13 U	0.11 U	0.12 U	0.11 U	0.13 U	0.11 U	0.12 U	0.11 U	0.13 U
Diethylphthalate	0.12 U	0.12 U	0.12 U	0.12 U	0.14 U	0.13 U	0.11 U	0.12 U	0.11 U	0.13 U	0.11 U	0.12 U	0.11 U	0.13 U
Dimethyl phthalate	0.12 U	0.12 U	0.12 U	0.12 U	0.14 U	0.13 U	0.11 U	0.12 U	0.11 U	0.13 U	0.11 U	0.12 U	0.11 U	0.13 U
Di-n-butylphthalate	0.12 UQ	0.12 UQ	0.12 UQ	0.12 UQ	0.14 UQ	0.13 UQ	0.11 UQ	0.12 UQ	0.11 UQ	0.13 UQ	0.11 UQ	0.12 U	0.11 U	0.13 U
Di-n-octylphthalate	0.12 U	0.12 U	0.12 U	0.12 U	0.14 U	0.13 U	0.11 U	0.12 U	0.11 U	0.13 U	0.11 U	0.12 U	0.11 U	0.13 U
Fluoranthene	0.15	0.22	0.037 J	0.03 U	0.32	0.032 U	0.038 J	0.031 U	0.047	0.031 U	0.2	0.035 J	0.027 U	0.032 U
Fluorene	0.029 U	0.022 J	0.031 U	0.03 U	0.034 U	0.032 U	0.028 U	0.031 U	0.028 U	0.031 U	0.028 U	0.031 U	0.027 U	0.032 U
Hexachlorobenzene	0.12 U	0.12 U	0.12 U	0.12 U	0.14 U	0.13 U	0.11 U	0.12 U	0.11 U	0.13 U	0.11 U	0.12 U	0.11 U	0.13 U
Hexachlorobutadiene	0.12 U	0.12 U	0.12 U	0.12 U	0.14 U	0.13 U	0.11 U	0.12 U	0.11 U	0.13 U	0.11 U	0.12 U	0.11 U	0.13 U
Hexachlorocyclopentadiene	0.12 U	0.12 U	0.12 U	0.12 U	0.14 U	0.13 U	0.11 U	0.12 U	0.11 U	0.13 U	0.11 U	0.12 U	0.11 U	0.13 U
Hexachloroethane	0.12 U	0.12 U	0.12 U	0.12 U	0.14 U	0.13 U	0.11 U	0.12 U	0.11 U	0.13 U	0.11 U	0.12 U	0.11 U	0.13 U
Indeno(1,2,3-cd)pyrene	0.16	0.022 J	0.031 U	0.03 U	0.062	0.032 U	0.028 U	0.031 U	0.049	0.031 U	0.028 U	0.031 U	0.027 U	0.032 U
Isophorone	0.12 U	0.12 U	0.12 U	0.12 U	0.14 U	0.13 U	0.11 U	0.12 U	0.11 U	0.13 U	0.11 U	0.12 U	0.11 U	0.13 U
Naphthalene	0.029 U	0.031 U	0.031 U	0.03 U	0.034 U	0.032 U	0.028 U	0.031 U	0.028 U	0.031 U	0.028 U	0.031 U	0.027 U	0.032 U
Nitrobenzene	0.12 U	0.12 U	0.12 U	0.12 U	0.14 U	0.13 U	0.11 U	0.12 U	0.11 U	0.13 U	0.11 U	0.12 U	0.11 U	0.13 U
n-Nitroso-di-n-propylamine	0.12 U	0.12 U	0.12 U	0.12 U	0.14 U	0.13 U	0.11 U	0.12 U	0.11 U	0.13 U	0.11 U	0.12 U	0.11 U	0.13 U
n-Nitrosodiphenylamine	0.23 U	0.24 U	0.25 U	0.24 U	0.27 U	0.26 U	0.22 U	0.25 U	0.22 U	0.25 U	0.23 U	0.25 U	0.22 U	0.25 U
Pentachlorophenol	0.35 U	0.37 U	0.37 U	0.37 U	0.41 U	0.39 U	0.34 U	0.37 U	0.34 U	0.38 U	0.34 U	0.37 U	0.33 U	0.38 U
Phenanthrene	0.088	0.11	0.031 U	0.03 U	0.2	0.032 U	0.027 J	0.031 U	0.028 U	0.031 U	0.21	0.031 U	0.027 U	0.032 U
Phenol	0.12 U	0.12 U	0.12 U	0.12 U	0.14 U	0.13 U	0.11 U	0.12 U	0.11 U	0.13 U	0.11 U	0.12 U	0.11 U	0.13 U
Pyrene	0.16	0.2	0.039 J	0.03 U	0.28	0.032 U	0.036 J	0.031 U	0.054	0.031 U	0.15	0.035 J	0.027 U	0.032 U
Pesticide/Polychlorinated Biphenyls (mg/kg)														
4,4'-DDD	0.0023 UD	0.058 D	0.0012 U	0.0012 U	0.0027 UD	0.0013 U	0.0022 UD	0.0012 U	0.0022 UD	0.0013 U	0.031 Q	0.004	0.0011 U	0.0013 U
4,4'-DDE	0.0023 UDQ	0.0024 UDQ	0.0012 U	0.0012 U	0.0027 UD	0.0013 U	0.0022 UD	0.0012 U	0.0022 UD	0.0013 U	0.0011 U	0.0012 U	0.0011 U	0.0013 U
4,4'-DDT	0.0023 UD	0.0024 UD	0.0012 U	0.0012 U	0.0027 UD	0.0013 U	0.0022 UD	0.0012 U	0.0022 UD	0.0013 U	0.0011 U	0.0012 U	0.0011 U	0.0013 U
Aldrin	0.0023 UD	0.0024 UD	0.0012 U	0.0012 U	0.0027 UD	0.0013 U	0.0022 UD	0.0012 U	0.0022 UD	0.0013 U	0.0011 U	0.0012 U	0.0011 U	0.0013 U
alpha-BHC	0.0023 UD	0.0024 UD	0.0012 U	0.0012 U	0.0027 UD	0.0013 U	0.0022 UD	0.0012 U	0.0022 UD	0.0013 U	0.0011 U	0.0012 U	0.0011 U	0.0013 U
alpha-Chlordane	0.0023 UD	0.0024 UD	0.0012 U	0.0012 U	0.0027 UD	0.0013 U	0.0022 UD	0.0012 U	0.0022 UD	0.0013 U	0.0011 U	0.0012 U	0.0011 U	0.0013 U
Aroclor-1016	0.12 UD	0.024 U	0.025 U	0.024 U	0.14 UD	0.026 U	0.11 UD	0.025 U	0.11 UD	0.025 U	0.023 U	0.025 U	0.022 U	0.025 U
Aroclor-1016/1242	0.12 UD	0.024 U	0.025 U	0.024 U	0.14 UD	0.026 U	0.11 UD	0.025 U	0.11 UD	0.025 U	0.023 U	0.025 U	0.022 U	0.025 U
Aroclor-1221	0.12 UD	0.024 U	0.025 U	0.024 U	0.14 UD	0.026 U	0.11 UD	0.025 U	0.11 UD	0.025 U	0.023 U	0.025 U	0.022 U	0.025 U
Aroclor-1232	0.12 UD	0.024 U	0.025 U	0.024 U	0.14 UD	0.026 U	0.11 UD	0.025 U	0.11 UD	0.025 U	0.023 U	0.025 U	0.022 U	0.025 U
Aroclor-1242	0.12 UD	0.024 U	0.025 U	0.024 U	0.14 UD	0.026 U	0.11 UD	0.025 U	0.11 UD	0.025 U	0.023 U	0.025 U	0.022 U	0.025 U
Aroclor-1248	0.12 UD	0.024 U	0.025 U	0.024 U	0.14 UD	0.026 U	0.11 UD	0.025 U	0.11 UD	0.025 U	0.023 U	0.025 U	0.022 U	0.025 U
Aroclor-1254	2.2 D	0.95	0.06	0.024 U	0.96 DQ	0.026 U	1 D	0.025 U	1.5 D	0.025 U	0.49	0.34	0.045 Q	0.025 U
Aroclor-1260	1.9 D	0.65	0.066	0.024 U	1.8 D	0.036 J	1.4 D	0.023 J	2.3 D	0.025 UQ	0.45	0.26	0.071	0.025 UQ
Aroclor-1262	0.12 UD	0.024 U	0.025 U	0.024 U	0.14 UD	0.026 U	0.11 UD	0.025 U	0.11 UD	0.025 U	0.023 U	0.025 U	0.022 U	0.025 U
Aroclor-1268	0.12 UD	0.024 U	0.025 U	0.024 U	0.14 UD	0.026 U	0.11 UD	0.025 U	0.11 UD	0.025 U	0.023 U	0.025 U	0.022 U	0.025 U
beta-BHC	0.0023 UDQ	0.0024 UDQ	0.0012 U	0.0012 U	0.0027 UD	0.0013 U	0.0022 UD	0.0012 U	0.0022 UD	0.0013 U	0.0011 U	0.0012 U	0.0011 U	0.0013 U
delta-BHC	0.0023 UDQ	0.0024 UDQ	0.0012 U	0.0012 U	0.0027 UD	0.0013 U	0.0022 UD	0.0012 U	0.0022 UD	0.0013 U	0.0011 U	0.0012 U	0.0011 U	0.0013 U
Dieldrin	0.0023 UD	0.0024 UD	0.0012 U	0.0012 U	0.0027 UD	0.0013 U	0.0022 UD	0.0012 U	0.0022 UD	0.0013 U	0.0011 U	0.0012 U	0.0011 U	0.0013 U
Endosulfan I	0.0023 UD	0.0024 UD	0.0012 U	0.0012 U	0.0027 UD	0.0013 U	0.0022 UD	0.0012 U	0.0022 UD	0.0013 U	0.0011 U	0.0012 U	0.0011 U	0.0013 U
Endosulfan II	0.0023 UD	0.0024 UD	0.0012 U	0.0012 U	0.0027 UD	0.0013 U	0.0022 UD	0.0012 U	0.0022 UD	0.0013 U	0.0011 U	0.0012 U	0.0011 U	0.0013 U
Endosulfan sulfate	0.0023 UD	0.0024 UD	0.0012 U	0.0012 U	0.0027 UD	0.0013 U	0.0022 UD	0.0012 U	0.0022 UD	0.0013 U	0.0011 U	0.0012 U	0.0011 U	0.0013 U
Endrin	0.0023 UD	0.0024 UD	0.0012 U	0.0012 U	0.0027 UD	0.0013 U	0.0022 UD	0.0012 U	0.0022 UD	0.0013 U	0.0011 U	0.0012 U	0.0011 U	0.0013 U
Endrin aldehyde	0.0023 UD	0.0024 UD	0.0012 U	0.0012 U	0.0027 UD	0.0013 U	0.0022 UD	0.0012 U	0.0022 UD	0.0013 U	0.0011 U	0.0012 U	0.0011 U	0.0013 U
Endrin ketone	0.0023 UD	0.0024 UD	0.0012 U	0.0012 U	0.0027 UD	0.0013 U	0.0022 UD	0.0012 U	0.0022 UD	0.0013 U	0.0011 U	0.0012 U	0.0011 U	0.0013 U
gamma-BHC (Lindane)	0.0023 UD	0.0024 UD	0.0012 U	0.0012 U	0.0027 UD	0.0013 U	0.0022 UD	0.0012 U	0.0022 UD	0.0013 U	0.0011 U	0.0012 U	0.0011 U	0.0013 U
gamma-Chlordane	0.0023 UDQ	0.0024 UDQ	0.0012 U	0.0012 U	0.0027 UD	0.0013 U	0.0022 UD	0.0012 U	0.0022 UD	0.0013 U	0.0011 U	0.0012 U	0.0011 U	0.0013 U
Heptachlor	0.0023 UD	0.0024 UD	0.0012 U	0.0012 U	0.0027 UD	0.0013 U	0.0022 UD	0.0012 U	0.0022 UD	0.0013 U	0.0011 U	0.0012 U	0.0011 U	0.0013 U
Heptachlor epoxide	0.0023 UD	0.0024 UD	0.0012 U	0.0012 U	0.0027 UD	0.0013 U	0.0022 UD	0.0012 U	0.0022 UD	0.0013 U	0.0011 U	0.0012 U	0.0011 U	0.0013 U
Methoxychlor	0.0023 UD	0.0024 UD	0.0012 U	0.0012 U	0.0027 UD	0.0013 U	0.0022 UD	0.0012 U	0.0022 UD	0.0013 U	0.0011 U	0.0012 U	0.0011 U	0.0013 U
Toxaphene	0.046 UD	0.049 UD	0.025 U	0.024 U	0.054 UD	0.026 U	0.045 UD	0.025 U	0.045 UD	0.025 U	0.023 U	0.025 U	0.022 U	0.025 U
Total Metals (mg/kg)														
Aluminum	10,100	10,800	20,400	22,100	14,200	27,900	15,200	20,700	14,500	19,700	11,300	9,530	4,990	20,900

TABLE B-6

Phase I Subsurface Soil Raw Analytical Results - 5th Street Disposal Area

TRDA Remedial Investigation Report

Harvey Point Defense Testing Activity

Hertford, North Carolina

Sample ID	TR-5TH-SB01-0.5-01-0613	TR-5TH-SB01-02-04-0613	TR-5TH-SB02-0.5-01-0613	TR-5TH-SB02-02-04-0613	TR-5TH-SB03-0.5-01-0613	TR-5TH-SB03-02-04-0613	TR-5TH-SB04-0.5-01-0613	TR-5TH-SB04-04-06-0613	TR-5TH-SB04D-0.5-01-0613	TR-5TH-SB04D-04-06-0613	TR-5TH-SB05-0.5-01-0613	TR-5TH-SB05-02-04-0613	TR-5TH-SB06-0.5-01-0613	TR-5TH-SB06-04-06-0613
Sample Date	**6/12/13**	**6/12/13**	**6/13/13**	**6/13/13**	**6/17/13**	**6/17/13**	**6/17/13**	**6/17/13**	**6/17/13**	**6/17/13**	**6/18/13**	**6/18/13**	**6/18/13**	**6/18/13**
Chemical Name														
Antimony	1.15 U	1.16 J	1.86 U	1.91 U	2.35 J	2.17 J	1.6 U	1.57 U	1.53 U	1.54 U	1.65 U	1.39 U	1.66 U	2.01 U
Arsenic	2.87	3.5 J	5.3	2.79 J	3.69 J	0.765 J	4.79	3.89	3.99	3.58	2.88 J	3.89	1.4 J	1.65 J
Barium	79.3	97.3	70.8	61.7	150	72.1	82.8	73.4	82.9	68.7	65.2	55.9	22.3	60.9
Beryllium	0.331	0.334	0.416	0.487	0.392	0.392	0.394	0.507	0.351	0.486	0.275	0.294	0.122	0.391
Cadmium	2.86	2.99	0.727	0.0953 U	3.98	0.101 J	1.36	0.0529 J	1.33	0.0772 U	1.21	0.949	0.0644 J	0.101 U
Calcium	1,860	2,480	1,800	877	5,010	1,750	1,870	715	1,830	668	1,290	2,380	1,330	1,140
Chromium	22.4	22	36.9	26.2	27.5	34.2	27.7	25.9	30.4	24.9	19.4	18.6	5.89	26.6
Chromium (hexavalent)	0.88	0.23 U	1.08	0.92	NS	NS	NS	NS	NS	NS	NS	NS	NS	NS
Cobalt	3.33	3.56	5.28	3.66	5.84	4.3	4.42	4.43	4.69	4.06	2.77	3.52	0.689 J	3.29
Copper	57.1	49.2	49.5	7.29	212	10.5	72.5	17.4	63.7	12.7	134	85.6	3.1	7.66
Iron	9,760	12,800	26,100	10,000	16,000	12,000	20,000	11,600	26,200	11,400	8,980	14,000	2,520	8,990
Lead	196	349	103	7.15	389	10.8	174	29.1	204	19.6	152	205	7.22	7.31
Magnesium	1,470	1,480	2,280	2,280	1,920	2,950	1,960	2,210	1,890	2,110	1,150	1,270	315	2,280
Manganese	153	227	181	69.6	163	94.9 D	170	104	177	101	110	106	24.5	108
Mercury	1.57 D	1.31	0.202	0.00695 U	NS	NS	NS	NS	NS	NS	NS	NS	NS	NS
Nickel	10.4	10.8	17.6	12	26.9	14.4	17.5	12.2	16	11.5	9.81	11.1	1.8	11.1
Potassium	407	424	748	643	666	971	618	660	602	632	355	458	176	677
Selenium	1.15 U	1.77 U	1.86 U	1.91 U	1.94 U	1.62 U	1.6 U	1.57 U	1.53 U	1.54 U	1.65 U	1.39 U	1.66 U	2.01 U
Silver	0.288 U	0.443 U	0.465 U	0.476 U	0.181 J	0.406 U	0.401 U	0.391 U	0.384 U	0.386 U	0.412 U	0.347 U	0.414 U	0.503 U
Sodium	53.9	56.9	115	335	58.6	68.2	67.8	122	65.3	118	51	48.4	23.3 J	64.8
Thallium	0.317 J	1.77 U	1.86 U	1.91 U	1.94 U	1.62 U	0.604 J	1.57 U	0.391 J	0.497 J	1.65 U	1.39 U	0.639 J	2.01 U
Vanadium	13.9	11.9	24.1	25.5	20.6	29.5	22.3	26	20	23.8	11.8	13.3	7	22.6
Zinc	487	422	714	21.6	636	38.9	153	33.1	232	29.3	120	115	10.3	20.8

Notes:

D - Compound identified in an analysis at a secondary dilution factor

J - Analyte present below the reporting limit

mg/kg - Milligrams per kilogram

NS - Not sampled

Q - One or more quality control criteria failed

U - The material was analyzed for, but not detected

TABLE B-7

Phase II Background Soil Raw Analytical Data

TRDA Remedial Investigation Report

Harvey Point Defense Testing Activity

Hertford, North Carolina

Sample ID	HPDTA-BG-SB01-02-04-0514	HPDTA-BG-SB02-02-04-0514	HPDTA-BG-SB03-02-04-0514	HPDTA-BG-SB04-02-04-0514	HPDTA-BG-SB05-02-04-0514	HPDTA-BG-SB05D-02-04-0514	HPDTA-BG-SS01-0514
Sample Date	5/6/2014 14:20	5/6/2014 13:30	5/6/2014 12:50	5/6/2014 13:10	5/6/2014 14:00	5/6/2014 14:05	5/5/2014 11:15
Chemical Name							
Semivolatile Organic Compounds (MG/KG)							
2-Methylnaphthalene	0.033 U	0.032 U	0.033 U	0.035 U	0.028 U	0.029 U	0.031 U
Acenaphthene	0.033 U	0.032 U	0.033 U	0.035 U	0.028 U	0.029 U	0.031 U
Acenaphthylene	0.033 U	0.032 U	0.033 U	0.035 U	0.028 U	0.029 U	0.031 U
Anthracene	0.033 U	0.032 U	0.033 U	0.035 U	0.028 U	0.029 U	0.031 U
Benzo(a)anthracene	0.033 U	0.032 U	0.033 U	0.035 U	0.028 U	0.029 U	0.031 U
Benzo(a)pyrene	0.033 U	0.032 U	0.033 U	0.035 U	0.028 U	0.029 U	0.031 U
Benzo(b)fluoranthene	0.033 U	0.032 U	0.033 U	0.035 U	0.028 U	0.029 U	0.031 U
Benzo(g,h,i)perylene	0.033 U	0.032 U	0.033 U	0.035 U	0.028 U	0.029 U	0.031 U
Benzo(k)fluoranthene	0.033 U	0.032 U	0.033 U	0.035 U	0.028 U	0.029 U	0.031 U
Carbazole	0.24 U	0.24 U	0.25 U	0.26 U	0.21 U	0.22 U	0.23 U
Chrysene	0.033 U	0.032 U	0.033 U	0.035 U	0.028 U	0.029 U	0.031 U
Dibenz(a,h)anthracene	0.033 U	0.032 U	0.033 U	0.035 U	0.028 U	0.029 U	0.031 U
Dibenzofuran	0.24 U	0.24 U	0.25 U	0.26 U	0.21 U	0.22 U	0.23 U
Fluoranthene	0.033 U	0.032 U	0.033 U	0.035 U	0.028 U	0.029 U	0.031 U
Fluorene	0.033 U	0.032 U	0.033 U	0.035 U	0.028 U	0.029 U	0.031 U
Indeno(1,2,3-cd)pyrene	0.033 U	0.032 U	0.033 U	0.035 U	0.028 U	0.029 U	0.031 U
Naphthalene	0.033 U	0.032 U	0.033 U	0.035 U	0.028 U	0.029 U	0.031 U
Phenanthrene	0.033 U	0.032 U	0.033 U	0.035 U	0.028 U	0.029 U	0.031 U
Pyrene	0.033 U	0.032 U	0.033 U	0.035 U	0.028 U	0.029 U	0.031 U

Notes:

MG/KG - Milligrams per kilogram

U - The material was analyzed for, but not detected

TABLE B-7

Phase II Background Soil Raw Analytical Data

TRDA Remedial Investigation Report

Harvey Point Defense Testing Activity

Hertford, North Carolina

Sample ID	HPDTA-BG-SS02-0514	HPDTA-BG-SS02D-0514	HPDTA-BG-SS03-0514	HPDTA-BG-SS04-0514	HPDTA-BG-SS05-0514
Sample Date	5/5/2014 10:50	5/5/2014 10:55	5/5/2014 11:55	5/5/2014 11:45	5/5/2014 11:05
Chemical Name					
Semivolatile Organic Compounds (MG/KG)					
2-Methylnaphthalene	0.034 U	0.034 U	0.032 U	0.034 U	0.029 U
Acenaphthene	0.034 U	0.034 U	0.032 U	0.034 U	0.029 U
Acenaphthylene	0.034 U	0.034 U	0.032 U	0.034 U	0.029 U
Anthracene	0.034 U	0.034 U	0.032 U	0.034 U	0.029 U
Benzo(a)anthracene	0.034 U	0.034 U	0.032 U	0.034 U	0.029 U
Benzo(a)pyrene	0.034 U	0.034 U	0.032 U	0.034 U	0.029 U
Benzo(b)fluoranthene	0.034 U	0.034 U	0.032 U	0.034 U	0.029 U
Benzo(g,h,i)perylene	0.034 U	0.034 U	0.032 U	0.034 U	0.029 U
Benzo(k)fluoranthene	0.034 U	0.034 U	0.032 U	0.034 U	0.029 U
Carbazole	0.25 U	0.25 U	0.24 U	0.26 U	0.21 U
Chrysene	0.034 U	0.034 U	0.032 U	0.034 U	0.029 U
Dibenz(a,h)anthracene	0.034 U	0.034 U	0.032 U	0.034 U	0.029 U
Dibenzofuran	0.25 U	0.25 U	0.24 U	0.26 U	0.21 U
Fluoranthene	0.034 U	0.034 U	0.032 U	0.034 U	0.029 U
Fluorene	0.034 U	0.034 U	0.032 U	0.034 U	0.029 U
Indeno(1,2,3-cd)pyrene	0.034 U	0.034 U	0.032 U	0.034 U	0.029 U
Naphthalene	0.034 U	0.034 U	0.032 U	0.034 U	0.029 U
Phenanthrene	0.034 U	0.034 U	0.032 U	0.034 U	0.029 U
Pyrene	0.034 U	0.034 U	0.032 U	0.034 U	0.029 U

Notes:

MG/KG - Milligrams per kilogram

U - The material was analyzed for, but not detected

TABLE B-8

Phase II Surface Soil Raw Analytical Data - 2nd Street Disposal Area

TRDA Remedial Investigation Report

Harvey Point Defense Testing Activity

Hertford, North Carolina

Sample ID	TR-2nd-SS06-0514	TR-2nd-SS07-0514	TR-2nd-SS08-0514	TR-2nd-SS09-0514	TR-2nd-SS10-0514	TR-2nd-SS10D-0514	TR-2nd-SS11-0514	TR-2nd-SS12-0514	TR-2nd-SS13-0514	TR-2nd-SS14-0514
Sample Date	5/5/14	5/5/14	5/5/14	5/5/14	5/5/14	5/5/14	5/5/14	5/5/14	5/5/14	5/5/14
Chemical Name										
Semivolatile Organic Compounds (MG/KG)										
2-Methylnaphthalene	0.034 U	0.029 U	0.034 U	0.035 U	0.039 U	0.04 U	0.037 U	0.036 U	0.036 U	0.035 U
Acenaphthene	0.034 U	0.029 U	0.034 U	0.035 U	0.039 U	0.04 U	0.037 U	0.036 U	0.036 U	0.035 U
Acenaphthylene	0.034 U	0.029 U	0.034 U	0.035 U	0.039 U	0.04 U	0.037 U	0.036 U	0.036 U	0.035 U
Anthracene	0.064	0.029 U	0.034 U	0.035 U	0.039 U	0.04 U	0.037 U	0.036 U	0.036 U	0.035 U
Benzo(a)anthracene	0.31	0.023 J	0.2	0.056	0.04 J	0.032 J	0.037 U	0.036 U	0.036 U	0.033 J
Benzo(a)pyrene	0.27	0.029 U	0.18	0.026 J	0.039 U	0.04 U	0.037 U	0.036 U	0.036 U	0.035 U
Benzo(b)fluoranthene	0.37	0.029 U	0.24	0.041 J	0.039 U	0.04 U	0.037 U	0.036 U	0.036 U	0.035 U
Benzo(g,h,i)perylene	0.21	0.029 U	0.13	0.023 J	0.039 U	0.04 U	0.037 U	0.036 U	0.036 U	0.035 U
Benzo(k)fluoranthene	0.15	0.029 U	0.087	0.035 U	0.039 U	0.04 U	0.037 U	0.036 U	0.036 U	0.035 U
Chrysene	0.29	0.029 U	0.2	0.028 J	0.039 U	0.04 U	0.037 U	0.036 U	0.036 U	0.035 U
Dibenz(a,h)anthracene	0.056	0.029 U	0.035 J	0.035 U	0.039 U	0.04 U	0.037 U	0.036 U	0.036 U	0.035 U
Fluoranthene	0.5	0.029 U	0.21	0.061	0.032 J	0.04 U	0.037 U	0.036 U	0.036 U	0.035 U
Fluorene	0.023 J	0.029 U	0.034 U	0.035 U	0.039 U	0.04 U	0.037 U	0.036 U	0.036 U	0.035 U
Indeno(1,2,3-cd)pyrene	0.18	0.029 U	0.1	0.035 U	0.039 U	0.04 U	0.037 U	0.036 U	0.036 U	0.035 U
Naphthalene	0.034 U	0.029 U	0.034 U	0.035 U	0.039 U	0.04 U	0.037 U	0.036 U	0.036 U	0.035 U
Phenanthrene	0.25	0.029 U	0.045	0.026 J	0.023 J	0.04 U	0.037 U	0.036 U	0.036 U	0.035 U
Pyrene	0.41	0.029 U	0.2	0.049	0.026 J	0.04 U	0.037 U	0.036 U	0.036 U	0.035 U
Pesticide/Polychlorinated Biphenyls (MG/KG)										
Aroclor-1254	0.025 U	0.021 U	0.044 JPQ	0.026 U	0.029 U	0.029 U	0.027 U	0.027 U	0.027 U	0.026 U
Aroclor-1260	0.029 J	0.021 U	0.15	0.026 U	0.029 U	0.023 J	0.027 U	0.027 U	0.027 U	0.026 U
Total Metals (MG/KG)										
Antimony	0.674 J	0.852 U	4.67	0.381 J	1.16 U	1.18 U	1.08 U	1.06 U	1.08 U	0.381 J
Arsenic	7.26	2.19 J	8.68	1.93 J	4.16	3.5	2.04 J	2.09 J	3.3	4.08
Barium	63.8	51.8	195	61.2	125	101	41.5	66.6	104	69
Cadmium	0.339	0.152 U	2.93	0.229 J	0.0528 J	0.119 J	0.139 J	0.076 J	0.0341 J	0.37
Chromium	21.1	18.5	28.8	16.6	37.7	30.1	10.8	20.8	37.2	23
Cobalt	2.76	3.74	3.53	2.19	3.73	3.35	2.31	2.76	3.77	3.63
Copper	27.1	6.84	710	18.8	8.79	7.49	4.34	8.05	7.23	23.8
Iron	7,360	9,700	11,500	6,600	13,900	11,300	4,440	6,990	13,900	9,810
Lead	27.7	3.68	164	20.8	14.4	14.3	8.72	8.57	10.7	26.3
Mercury	0.837	0.0139 J	3.08 D	0.27	0.488	0.403	0.188	0.185	0.101	0.216
Nickel	8.25	9.92	23.3	5.51	16.4	13.4	5.07	10	14	11
Silver	0.653 Q	0.234 U	15.6 D	0.365 J	0.318 U	0.324 U	0.298 U	0.293 U	0.297 U	1.03
Zinc	70.4	28	561	39.4	51.9	46.2	22	21.2	28.2	64.4

Notes:

D - Compound identified in an analysis at a secondary dilution factor.

J - Analyte present. Value may or may not be accurate or precise

P - Difference between the concentration on the two columns is greater than 25%; the lower of the two values is reported.

MG/KG - Milligram per kilogram

Q - One or more QC criteria outside acceptance limits

U - The material was analyzed for, but not detected

TABLE B-9

Phase II Surface Soil Raw Analytical Data - 5th Street Disposal Area

TRDA Remedial Investigation Report

Harvey Point Defense Testing Activity

Hertford, North Carolina

Sample ID	TR-5th-SS06-0514	TR-5th-SS07-0514	TR-5th-SS08-0514	TR-5th-SS09-0514	TR-5th-SS10-0514	TR-5th-SS11-0514	TR-5th-SS12-0514	TR-5th-SS12D-0514	TR-5th-SS13-0514	TR-5th-SS14-0514	TR-5th-SS15-0514	TR-5th-SS16-0514	TR-5th-SS16D-0514	TR-5th-SS17-0514
Sample Date	5/5/14	5/5/14	5/5/14	5/5/14	5/5/14	5/5/14	5/5/14	5/5/14	5/5/14	5/5/14	5/5/14	5/5/14	5/5/14	5/5/14
Chemical Name														
Volatile Organic Compounds (MG/KG)														
Benzene	0.0009 U	0.0011 U	0.0011 U	0.0012 U	0.0013 U	0.0013 U	0.0013 U	0.0011 U	0.0015 U	0.0014 U	0.0013 UQ	0.0013 UQ	0.0013 U	0.0016 U
Styrene	0.0009 U	0.0011 U	0.0011 U	0.0012 U	0.0013 U	0.0013 U	0.0013 U	0.0011 U	0.0015 U	0.0014 U	0.0013 UQ	0.0013 UQ	0.0013 U	0.0016 U
Semivolatile Organic Compounds (MG/KG)														
Acenaphthene	0.032 U	0.11	0.033 U	0.041 UQ	0.035 U	0.061	0.036 UQ	0.033 U	0.04 U	0.03 U	0.036 U	0.038 U	0.037 U	0.036 U
Acenaphthylene	0.026 J	0.02 J	0.033 U	0.041 UQ	0.035 U	0.035 U	0.036 UQ	0.033 U	0.04 U	0.03 U	0.036 U	0.038 U	0.037 U	0.036 U
Anthracene	0.042	0.23	0.033 U	0.041 UQ	0.023 J	0.11	0.036 UQ	0.033 U	0.04 U	0.03 U	0.036 U	0.038 U	0.037 U	0.036 U
Benzo(a)anthracene	0.12	0.63	0.066	0.078 Q	0.064	0.34	0.04 JQ	0.035 J	0.04 U	0.022 J	0.048	0.031 J	0.042 J	0.035 J
Benzo(a)pyrene	0.11	0.57	0.049	0.069 Q	0.041 J	0.3	0.036 UQ	0.033 U	0.04 U	0.03 U	0.021 J	0.038 U	0.037 U	0.036 U
Benzo(b)fluoranthene	0.19	0.76	0.079	0.11 Q	0.064	0.44	0.036 UQ	0.024 J	0.04 U	0.03 U	0.042 J	0.038 U	0.037 U	0.036 U
Benzo(g,h,i)perylene	0.1	0.39	0.052	0.072 Q	0.036 J	0.22	0.036 UQ	0.033 U	0.04 U	0.03 U	0.024 J	0.038 U	0.037 U	0.036 U
Benzo(k)fluoranthene	0.061	0.26	0.033 U	0.042 JQ	0.035 U	0.17	0.036 UQ	0.033 U	0.04 U	0.03 U	0.036 U	0.038 U	0.037 U	0.036 U
Carbazole	0.47 UDQ	0.69 JDQ	0.49 UDQ	0.3 U	0.52 UDQ	0.26 U	0.27 U	0.24 U	0.3 U	0.22 U	0.27 U	0.28 U	0.28 U	0.27 U
Chrysene	0.14	0.66	0.062	0.054 Q	0.046	0.36	0.036 UQ	0.033 U	0.04 U	0.03 U	0.024 J	0.038 U	0.017 J	0.036 U
Dibenz(a,h)anthracene	0.026 J	0.1	0.033 U	0.041 UQ	0.035 U	0.058	0.036 UQ	0.033 U	0.04 U	0.03 U	0.036 U	0.038 U	0.037 U	0.036 U
Dibenzofuran	0.47 UDQ	0.29 JDQ	0.49 UDQ	0.3 U	0.52 UDQ	0.26 U	0.27 U	0.24 U	0.3 U	0.22 U	0.27 U	0.28 U	0.28 U	0.27 U
Fluoranthene	0.26	1.3	0.071	0.063 Q	0.087	0.81	0.027 JQ	0.021 J	0.04 U	0.03 U	0.04 J	0.038 U	0.033 J	0.036 U
Fluorene	0.032 U	0.085	0.033 U	0.041 UQ	0.035 U	0.069	0.036 UQ	0.033 U	0.04 U	0.03 U	0.036 U	0.038 U	0.037 U	0.036 U
Indeno(1,2,3-cd)pyrene	0.082	0.34	0.039 J	0.06 Q	0.026 J	0.18	0.036 UQ	0.033 U	0.04 U	0.03 U	0.036 U	0.038 U	0.037 U	0.036 UQ
Phenanthrene	0.13	0.75	0.044	0.041 UQ	0.059	0.68	0.036 UQ	0.033 U	0.04 U	0.03 U	0.036 U	0.038 U	0.037 U	0.036 U
Pyrene	0.23	1.1	0.074	0.063 Q	0.072	0.63	0.024 JQ	0.019 J	0.04 U	0.03 U	0.034 J	0.038 U	0.033 J	0.036 U
Pesticide/Polychlorinated Biphenyls (MG/KG)														
Aroclor-1254	7.3 DPQ	12 DPQ	5.7 DPQ	0.21 JDPQ	0.026 U	0.058 PQ	0.093 PQ	0.23 PQ	0.03 U	0.022 UQ	0.2 PQ	0.091 PQ	0.037 JP	0.021 JQ
Aroclor-1260	25 D	60 D	29 D	1.2 D	0.21	0.25	0.48	1.1	0.02 J	0.044	0.61	0.17	0.13	0.1
Explosives (MG/KG)														
1,3,5-Trinitrobenzene	NS	NS	NS	NS	NS	NS	NS	NS	NS	NS	NS	NS	NS	NS
1,3-Dinitrobenzene	NS	NS	NS	NS	NS	NS	NS	NS	NS	NS	NS	NS	NS	NS
2,4,6-Trinitrotoluene	NS	NS	NS	NS	NS	NS	NS	NS	NS	NS	NS	NS	NS	NS
2,4-Dinitrotoluene	NS	NS	NS	NS	NS	NS	NS	NS	NS	NS	NS	NS	NS	NS
2,6-Dinitrotoluene	NS	NS	NS	NS	NS	NS	NS	NS	NS	NS	NS	NS	NS	NS
2-Amino-4,6-dinitrotoluene	NS	NS	NS	NS	NS	NS	NS	NS	NS	NS	NS	NS	NS	NS
2-Nitrotoluene	NS	NS	NS	NS	NS	NS	NS	NS	NS	NS	NS	NS	NS	NS
3,5-Dinitroaniline	NS	NS	NS	NS	NS	NS	NS	NS	NS	NS	NS	NS	NS	NS
3-Nitrotoluene	NS	NS	NS	NS	NS	NS	NS	NS	NS	NS	NS	NS	NS	NS
4-Amino-2,6-dinitrotoluene	NS	NS	NS	NS	NS	NS	NS	NS	NS	NS	NS	NS	NS	NS
4-Nitrotoluene	NS	NS	NS	NS	NS	NS	NS	NS	NS	NS	NS	NS	NS	NS
HMX	NS	NS	NS	NS	NS	NS	NS	NS	NS	NS	NS	NS	NS	NS
Nitrobenzene	NS	NS	NS	NS	NS	NS	NS	NS	NS	NS	NS	NS	NS	NS
Nitroglycerin	NS	NS	NS	NS	NS	NS	NS	NS	NS	NS	NS	NS	NS	NS
Perchlorate	NS	NS	NS	NS	NS	NS	NS	NS	NS	NS	NS	NS	NS	NS
PETN	NS	NS	NS	NS	NS	NS	NS	NS	NS	NS	NS	NS	NS	NS
RDX	NS	NS	NS	NS	NS	NS	NS	NS	NS	NS	NS	NS	NS	NS
Tetryl	NS	NS	NS	NS	NS	NS	NS	NS	NS	NS	NS	NS	NS	NS
Total Metals (MG/KG)														
Antimony	3.96	2.17	17 JD	2.9	1.04 U	0.359 J	1.39 J	0.974 J	1.18 U	0.876 U	0.889 J	0.81 J	0.674 J	1.07 U
Arsenic	4.7	3.69	3.9	3.3 J	2.4 J	1.8 J	4.54	3.18	1.64 U	1.5 U	3.96	3.2	2.84	1.79 J
Cadmium	4.56	4.29	3.09	2.6	0.335	4.71	0.769	0.511	0.06 J	0.0392 J	1.31	1.18	0.746	1.47
Iron	14,600	15,400	14,700	11,900	9,350	6,770	24,900	14,200	680	721	14,900	7,510	9,130	6,070
Lead	336	204	1,080	228	334	62.3	217	230	8.12	6.27	186	105	51.8	31.1
Mercury	1.05	0.617	2.56 D	1.06	0.0579	0.12	0.43	0.536	0.0354	0.0248	0.202	0.111	0.108	0.087
Zinc	435	383	382	283	95.3	345	156	133	7.12	5.07	159	130	74.1	90.1

Notes:

D - Compound identified in an analysis at a secondary dilution factor.

J - Analyte present. Value may or may not be accurate or precise

NS - Not sampled

P - Difference between the concentration on the two columns is greater than 25%;
the lower of the two values is reported.

Q - One or more QC criteria outside acceptance limits

U - The material was analyzed for, but not detected

UJ - Analyte not detected, quantitation limit may be inaccurate

MG/KG - Milligrams per kilogram

TABLE B-9

Phase II Surface Soil Raw Analytical Data - 5th Street Disposal Area

TRDA Remedial Investigation Report

Harvey Point Defense Testing Activity

Hertford, North Carolina

Sample ID	TR-5th-SS18-0514	TR-5th-SS19-0514	TR-5th-SS20-0514	TR-5th-SS21-0514	TR-5TH-SS22-0514	TR-5TH-SS23-0514	TR-5TH-SS24-0514	TR-5TH-SS25-0514	TR-5TH-SS26-0514	TR-5TH-SS26D-0514
Sample Date	5/5/14	5/5/14	5/5/14	5/5/14	5/5/14	5/5/14	5/5/14	5/5/14	5/5/14	5/5/14
Chemical Name										
Volatile Organic Compounds (MG/KG)										
Benzene	0.0012 U	0.0012 U	0.0012 U	0.0009 U	NS	NS	NS	NS	NS	NS
Styrene	0.0012 U	0.0012 U	0.0012 U	0.0009 U	NS	NS	NS	NS	NS	NS
Semivolatile Organic Compounds (MG/KG)										
Acenaphthene	0.031 U	0.032 U	0.037 U	0.023 J	NS	NS	NS	NS	NS	NS
Acenaphthylene	0.031 U	0.032 U	0.037 U	0.031 U	NS	NS	NS	NS	NS	NS
Anthracene	0.031 U	0.032 U	0.037 U	0.067	NS	NS	NS	NS	NS	NS
Benzo(a)anthracene	0.03 J	0.033 J	0.03 J	0.16	NS	NS	NS	NS	NS	NS
Benzo(a)pyrene	0.031 U	0.032 U	0.037 U	0.091	NS	NS	NS	NS	NS	NS
Benzo(b)fluoranthene	0.031 U	0.032 U	0.037 U	0.15	NS	NS	NS	NS	NS	NS
Benzo(g,h,i)perylene	0.031 U	0.032 U	0.037 U	0.072	NS	NS	NS	NS	NS	NS
Benzo(k)fluoranthene	0.031 U	0.032 U	0.037 U	0.06	NS	NS	NS	NS	NS	NS
Carbazole	0.23 U	0.23 U	0.27 U	0.23 U	NS	NS	NS	NS	NS	NS
Chrysene	0.031 U	0.032 U	0.037 U	0.13	NS	NS	NS	NS	NS	NS
Dibenz(a,h)anthracene	0.031 U	0.032 U	0.037 U	0.031 U	NS	NS	NS	NS	NS	NS
Dibenzofuran	0.23 U	0.23 U	0.27 U	0.23 U	NS	NS	NS	NS	NS	NS
Fluoranthene	0.031 U	0.023 J	0.037 U	0.31	NS	NS	NS	NS	NS	NS
Fluorene	0.031 U	0.032 U	0.037 U	0.033 J	NS	NS	NS	NS	NS	NS
Indeno(1,2,3-cd)pyrene	0.031 UQ	0.032 UQ	0.037 UQ	0.06 Q	NS	NS	NS	NS	NS	NS
Phenanthrene	0.031 U	0.032 U	0.037 U	0.27	NS	NS	NS	NS	NS	NS
Pyrene	0.031 U	0.019 J	0.037 U	0.23	NS	NS	NS	NS	NS	NS
Pesticide/Polychlorinated Biphenyls (MG/KG)										
Aroclor-1254	0.021 JPQ	0.021 JPQ	0.027 JPQ	0.089 PQ	NS	NS	NS	NS	NS	NS
Aroclor-1260	0.25	0.23	0.12	0.71	NS	NS	NS	NS	NS	NS
Explosives (MG/KG)										
1,3,5-Trinitrobenzene	NS	NS	NS	NS	0.128 U	0.127 U	0.128 U	0.128 U	0.128 U	0.128 U
1,3-Dinitrobenzene	NS	NS	NS	NS	0.128 U	0.127 U	0.128 U	0.128 U	0.128 U	0.128 U
2,4,6-Trinitrotoluene	NS	NS	NS	NS	0.128 U	0.127 U	0.128 U	0.128 U	0.128 U	0.128 U
2,4-Dinitrotoluene	NS	NS	NS	NS	0.128 U	0.127 U	0.128 U	0.128 U	0.128 U	0.128 U
2,6-Dinitrotoluene	NS	NS	NS	NS	0.128 U	0.127 U	0.128 U	0.128 U	0.128 U	0.128 U
2-Amino-4,6-dinitrotoluene	NS	NS	NS	NS	0.128 U	0.127 U	0.128 U	0.128 U	0.128 U	0.128 U
2-Nitrotoluene	NS	NS	NS	NS	0.128 U	0.127 U	0.128 U	0.128 U	0.128 U	0.128 U
3,5-Dinitroaniline	NS	NS	NS	NS	0.128 QU	0.127 QU	0.128 QU	0.128 QU	0.128 QU	0.128 QU
3-Nitrotoluene	NS	NS	NS	NS	0.128 U	0.127 UJ	0.128 U	0.128 U	0.128 U	0.128 U
4-Amino-2,6-dinitrotoluene	NS	NS	NS	NS	0.128 QU	0.127 QU	0.128 QU	0.128 QU	0.128 QU	0.128 QU
4-Nitrotoluene	NS	NS	NS	NS	0.128 U	0.127 UJ	0.128 U	0.128 U	0.128 U	0.128 U
HMX	NS	NS	NS	NS	0.128 U	0.127 U	0.128 U	0.128 U	0.128 U	0.128 U
Nitrobenzene	NS	NS	NS	NS	0.128 QU	0.127 QU	0.128 QU	0.128 QU	0.128 QU	0.128 QU
Nitroglycerin	NS	NS	NS	NS	0.168 U	0.167 U	0.168 QU	0.167 QU	0.167 QU	0.168 QU
Perchlorate	NS	NS	NS	NS	0.00138 U	0.00125 U	0.00141 U	0.00153 U	0.00154 U	0.00116 U
PETN	NS	NS	NS	NS	0.26	0.127 U	0.128 U	0.128 U	0.128 U	0.128 U
RDX	NS	NS	NS	NS	0.128 U	0.127 U	0.128 U	0.128 U	0.128 U	0.128 U
Tetryl	NS	NS	NS	NS	0.128 U	0.127 U	0.128 U	0.128 U	0.128 U	0.128 U
Total Metals (MG/KG)										
Antimony	0.927 U	0.939 U	1.08 U	0.918 U	NS	NS	NS	NS	NS	NS
Arsenic	2.03 J	1.97 J	2.53 J	1.55 J	NS	NS	NS	NS	NS	NS
Cadmium	0.279	0.191 J	0.291 J	0.277 J	NS	NS	NS	NS	NS	NS
Iron	5,050	7,500	7,720	3,830	NS	NS	NS	NS	NS	NS
Lead	23.4	14.3	22.9	24.4	NS	NS	NS	NS	NS	NS
Mercury	0.182	0.116	0.129	0.911	NS	NS	NS	NS	NS	NS
Zinc	38.1	24.4	77.3	36.6	NS	NS	NS	NS	NS	NS

Notes:

D - Compound identified in an analysis at a secondary dilution factor.

J - Analyte present. Value may or may not be accurate or precise

NS - Not sampled

P - Difference between the concentration on the two columns is greater than 25%; the lower of the two values is reported.

Q - One or more QC criteria outside acceptance limits

U - The material was analyzed for, but not detected

UJ - Analyte not detected, quantitation limit may be inaccurate

MG/KG - Milligrams per kilogram

TABLE B-10

Phase II Subsurface Soil Raw Analytical Data - 2nd Street Disposal Area

TRDA Remedial Investigation Report

Harvey Point Defense Testing Activity

Hertford, North Carolina

Sample ID	TR-2nd-SB08-01-03-0514	TR-2nd-SB08-03-04-0514	TR-2nd-SB08D-01-03-0514	TR-2nd-SB09-01-03-0514	TR-2nd-SB09-03-04-0514	TR-2nd-SB10-01-03-0514	TR-2nd-SB10-03-05-0514	TR-2nd-SB10D-01-03-0514	TR-2nd-SB11-01-03-0514	TR-2nd-SB11-03-05-0514
Sample Date	5/7/14	5/7/14	5/7/14	5/7/14	5/7/14	5/7/14	5/7/14	5/7/14	5/7/14	5/7/14
Chemical Name										
Volatile Organic Compounds (MG/KG)										
1,4-Dioxane	NS	NS	NS	NS	NS	NS	NS	NS	NS	NS
Benzene	0.001 U	0.0011 U	0.0011 U	0.001 U	0.0011 U	0.0009 U	0.0011 U	0.0009 U	0.0011 U	0.0011 U
Bromomethane	0.0052 UQ	0.0056 UQ	0.0054 UQ	0.005 UQ	0.0054 UQ	0.0043 UQ	0.0057 UQ	0.0043 UQ	0.0055 UQ	0.0056 UQ
Chloroform	0.001 U	0.0011 U	0.0011 U	0.001 U	0.0011 U	0.0009 U	0.0011 U	0.0009 U	0.0011 U	0.0011 U
Chloromethane	0.001 U	0.0011 U	0.0011 U	0.001 U	0.0011 U	0.0009 U	0.0011 U	0.0009 U	0.0011 U	0.0011 U
Dichlorodifluoromethane (Freon-12)	0.001 UQ	0.0011 UQ	0.0011 UQ	0.001 UQ	0.0011 UQ	0.0009 UQ	0.0011 UQ	0.0009 UQ	0.0011 UQ	0.0011 UQ
Ethylbenzene	0.001 U	0.0011 U	0.0011 U	0.001 U	0.0011 U	0.0009 U	0.0011 U	0.0009 U	0.0011 U	0.0011 U
Isopropylbenzene	0.001 U	0.0011 U	0.0011 U	0.001 U	0.0011 U	0.0009 U	0.0011 U	0.0009 U	0.0011 U	0.0011 U
m- and p-Xylene	0.0021 U	0.0022 U	0.0021 U	0.002 U	0.0022 U	0.0017 U	0.0023 U	0.0017 U	0.0022 U	0.0023 U
o-Xylene	0.001 U	0.0011 U	0.0011 U	0.001 U	0.0011 U	0.0009 U	0.0011 U	0.0009 U	0.0011 U	0.0011 U
Styrene	0.001 U	0.0011 U	0.0011 U	0.001 U	0.0011 U	0.0009 U	0.0011 U	0.0009 U	0.0011 U	0.0011 U
Toluene	0.001 U	0.0011 U	0.0011 U	0.001 U	0.0011 U	0.0009 U	0.0011 U	0.0009 U	0.0011 U	0.0011 U
Trichlorofluoromethane (Freon-11)	0.001 UQ	0.0011 UQ	0.0011 UQ	0.019	0.021	0.0009 UQ	0.0011 UQ	0.0009 UQ	0.0011 UQ	0.0011 UQ
Xylene, total	0.0021 U	0.0022 U	0.0021 U	0.002 U	0.0022 U	0.0017 U	0.0023 U	0.0017 U	0.0022 U	0.0023 U
Semivolatile Organic Compounds (MG/KG)										
2-Methylnaphthalene	0.033 U	0.034 U	0.034 U	0.034 U	0.034 U	0.032 U	0.034 U	0.032 U	0.037 U	0.036 U
Acenaphthene	0.033 U	0.034 U	0.034 U	0.034 U	0.034 U	0.032 U	0.034 U	0.032 U	0.037 U	0.036 U
Acenaphthylene	0.033 U	0.034 U	0.034 U	0.034 U	0.034 U	0.032 U	0.034 U	0.032 U	0.037 U	0.036 U
Anthracene	0.033 U	0.034 U	0.034 U	0.034 U	0.034 U	0.032 U	0.034 U	0.032 U	0.037 U	0.036 U
Benzo(a)anthracene	0.033 U	0.034 U	0.034 U	0.034 U	0.034 U	0.027 J	0.034 U	0.028 J	0.03 J	0.036 U
Benzo(a)pyrene	0.033 U	0.034 U	0.034 U	0.034 U	0.034 U	0.032 U	0.034 U	0.032 U	0.037 U	0.036 U
Benzo(b)fluoranthene	0.033 U	0.034 U	0.034 U	0.034 U	0.034 U	0.032 U	0.034 U	0.032 U	0.037 U	0.036 U
Benzo(g,h,i)perylene	0.033 U	0.034 U	0.034 U	0.034 U	0.034 U	0.032 U	0.034 U	0.032 U	0.037 U	0.036 U
Benzo(k)fluoranthene	0.033 U	0.034 U	0.034 U	0.034 U	0.034 U	0.032 U	0.034 U	0.032 U	0.037 U	0.036 U
Chrysene	0.033 U	0.034 U	0.034 U	0.034 U	0.034 U	0.032 U	0.034 U	0.032 U	0.037 U	0.036 U
Dibenz(a,h)anthracene	0.033 U	0.034 U	0.034 U	0.034 U	0.034 U	0.032 U	0.034 U	0.032 U	0.037 U	0.036 U
Dibenzofuran	0.25 U	0.25 U	0.25 U	0.25 U	0.25 U	0.24 U	0.25 U	0.24 U	0.27 U	0.27 U
Fluoranthene	0.033 U	0.034 U	0.034 U	0.034 U	0.034 U	0.032 U	0.034 U	0.032 U	0.037 U	0.036 U
Fluorene	0.033 U	0.034 U	0.034 U	0.034 U	0.034 U	0.032 U	0.034 U	0.032 U	0.037 U	0.036 U
Indeno(1,2,3-cd)pyrene	0.033 U	0.034 U	0.034 U	0.034 U	0.034 U	0.032 UQ	0.034 UQ	0.032 UQ	0.037 UQ	0.036 UQ
Naphthalene	0.033 U	0.034 U	0.034 U	0.034 U	0.034 U	0.032 U	0.034 U	0.032 U	0.037 U	0.036 U
Phenanthrene	0.033 U	0.034 U	0.034 U	0.034 U	0.034 U	0.032 U	0.034 U	0.032 U	0.037 U	0.036 U
Pyrene	0.033 U	0.034 U	0.034 U	0.034 U	0.034 U	0.032 U	0.034 U	0.032 U	0.037 U	0.036 U
Pesticide/Polychlorinated Biphenyls (MG/KG)										
Aroclor-1254	0.025 U	0.025 U	0.025 U	0.025 U	0.025 U	0.024 UQ	0.025 U	0.024 U	0.027 UQ	0.027 U
Aroclor-1260	0.025 U	0.025 U	0.025 U	0.025 U	0.025 U	0.036 J	0.025 U	0.024 U	0.17	0.027 U
Total Metals (MG/KG)										
Antimony	0.985 U	1.02 U	0.994 U	0.995 U	1.01 U	0.952 U	1.01 U	0.952 U	1.94 J	1.07 U
Arsenic	1.62 J	1.32 J	2.03 J	2.19 J	2.6 J	2.57 J	2.38 J	2.03 J	3.02 J	3.74
Barium	105	99.4	116	104	72.4	73	58.8	64.2	101	69.6
Cadmium	0.123 U	0.166 U	0.159 U	0.124 U	0.176 U	0.191 J	0.152 U	0.119 U	0.181 U	0.164 U
Chromium	32.3	31.4	35.4	30	23.3	21.1	26.6	21.9	59.9	40.4
Cobalt	3.76	3.51	4.21	3.37	3.51	2.73	3.23	5.76	5.63	3.96
Iron	10,800	10,100	12,600	9,700	8,490	7,530	8,770	8,800	31,200 D	13,000
Lead	8.24	7.47	8.43	7.39	4.84	16.9	5.96	8.2	11.5	10.3
Manganese	72.3	56.3	71.4	85.6	96.7	186	46.5	409	83.8	57.9
Mercury	0.0451	0.0722	0.0535	0.0389	0.0166 J	0.958	0.0247	0.195	0.939	0.0458
Nickel	14.4	14.1	15.3	13.5	12.3	8.26	11	9.49	16.4	12.2
Silver	0.271 U	0.28 U	0.273 U	0.274 U	0.279 U	0.427 JQ	0.278 U	0.591 J	0.159 J	0.293 U
Vanadium	26.3	24.9	30.4	22.7	20.6	17.6	22.2	20.8	50.7	31.2
Zinc	21.4	20.6	23.5	22.4	20.4	55.2	20.1	23	43.1	25.2

Notes:

D - Compound identified in an analysis at a secondary dilution factor.

J - Analyte present. Value may or may not be accurate or precise

NS - Not sampled

Q - One or more QC criteria outside acceptance limits

U - The material was analyzed for, but not detected

MG/KG - Milligrams per kilogram

TABLE B-10

Phase II Subsurface Soil Raw Analytical Data - 2nd Street Disposal Area

TRDA Remedial Investigation Report

Harvey Point Defense Testing Activity

Hertford, North Carolina

Sample ID	TR-2nd-SB12-01-03-0514	TR-2nd-SB13-01-03-0514	TR-2nd-SB14-01-02-0514	TR-2nd-SB15-01-02-0514	TR-2nd-SB16-01-02-0514	TR-2nd-SB17-01-03-0514	TR-2nd-SB17-03-05-0514	TR-2nd-SB17D-01-03-0514	TR-2nd-SB18-01-03-0514	TR-2nd-SB18-03-05-0514
Sample Date	5/7/14	5/7/14	5/7/14	5/7/14	5/7/14	5/6/14	5/6/14	5/6/14	5/6/14	5/6/14
Chemical Name										
Volatile Organic Compounds (MG/KG)										
1,4-Dioxane	NS	NS	NS	NS	NS	0.00751 U	0.00582 U	0.00721 U	0.00658 U	0.00588 U
Benzene	0.0013 U	0.001 U	0.0013 U	0.001 U	0.0011 U	NS	NS	NS	NS	NS
Bromomethane	0.0065 UQ	0.005 UQ	0.0066 UQ	0.0051 UQ	0.0055 UQ	NS	NS	NS	NS	NS
Chloroform	0.017	0.001 U	0.0013 U	0.001 U	0.0011 U	NS	NS	NS	NS	NS
Chloromethane	0.0013 U	0.001 U	0.0013 U	0.001 U	0.0011 U	NS	NS	NS	NS	NS
Dichlorodifluoromethane (Freon-12)	0.0013 UQ	0.001 UQ	0.0013 UQ	0.001 UQ	0.0011 UQ	NS	NS	NS	NS	NS
Ethylbenzene	0.0013 U	0.001 U	0.0013 U	0.001 U	0.0011 U	NS	NS	NS	NS	NS
Isopropylbenzene	0.0013 U	0.001 U	0.0013 U	0.001 U	0.0011 U	NS	NS	NS	NS	NS
m- and p-Xylene	0.0026 U	0.002 U	0.0026 U	0.002 U	0.0022 U	NS	NS	NS	NS	NS
o-Xylene	0.0013 U	0.001 U	0.0013 U	0.001 U	0.0011 U	NS	NS	NS	NS	NS
Styrene	0.0013 U	0.031	0.0013 U	0.001 U	0.0011 U	NS	NS	NS	NS	NS
Toluene	0.0013 U	0.001 U	0.0013 U	0.001 U	0.0011 U	NS	NS	NS	NS	NS
Trichlorofluoromethane (Freon-11)	0.0013 UQ	0.001 UQ	0.0013 UQ	0.001 UQ	0.0011 UQ	NS	NS	NS	NS	NS
Xylene, total	0.0026 U	0.002 U	0.0026 U	0.002 U	0.0022 U	NS	NS	NS	NS	NS
Semivolatile Organic Compounds (MG/KG)										
2-Methylnaphthalene	0.035 U	0.033 U	0.035 U	0.034 U	0.033 U	NS	NS	NS	NS	NS
Acenaphthene	0.035 U	0.033 U	0.035 U	0.034 U	0.033 U	NS	NS	NS	NS	NS
Acenaphthylene	0.035 U	0.033 U	0.035 U	0.034 U	0.033 U	NS	NS	NS	NS	NS
Anthracene	0.035 U	0.033 U	0.035 U	0.034 U	0.033 U	NS	NS	NS	NS	NS
Benzo(a)anthracene	0.026 J	0.033 U	0.035 U	0.034 U	0.033 U	NS	NS	NS	NS	NS
Benzo(a)pyrene	0.035 U	0.033 U	0.035 U	0.034 U	0.033 U	NS	NS	NS	NS	NS
Benzo(b)fluoranthene	0.035 U	0.033 U	0.035 U	0.034 U	0.033 U	NS	NS	NS	NS	NS
Benzo(g,h,i)perylene	0.035 U	0.033 U	0.035 U	0.034 U	0.033 U	NS	NS	NS	NS	NS
Benzo(k)fluoranthene	0.035 U	0.033 U	0.035 U	0.034 U	0.033 U	NS	NS	NS	NS	NS
Chrysene	0.035 U	0.033 U	0.035 U	0.034 U	0.033 U	NS	NS	NS	NS	NS
Dibenz(a,h)anthracene	0.035 U	0.033 U	0.035 U	0.034 U	0.033 U	NS	NS	NS	NS	NS
Dibenzofuran	0.26 U	0.25 U	0.26 U	0.25 U	0.25 U	NS	NS	NS	NS	NS
Fluoranthene	0.035 U	0.033 U	0.035 U	0.034 U	0.033 U	NS	NS	NS	NS	NS
Fluorene	0.035 U	0.033 U	0.035 U	0.034 U	0.033 U	NS	NS	NS	NS	NS
Indeno(1,2,3-cd)pyrene	0.035 UQ	0.033 UQ	0.035 UQ	0.034 U	0.033 U	NS	NS	NS	NS	NS
Naphthalene	0.035 U	0.033 U	0.035 U	0.034 U	0.033 U	NS	NS	NS	NS	NS
Phenanthrene	0.035 U	0.033 U	0.035 U	0.034 U	0.033 U	NS	NS	NS	NS	NS
Pyrene	0.035 U	0.033 U	0.035 U	0.034 U	0.033 U	NS	NS	NS	NS	NS
Pesticide/Polychlorinated Biphenyls (MG/KG)										
Aroclor-1254	0.026 U	0.025 U	0.026 U	0.025 U	0.025 U	NS	NS	NS	NS	NS
Aroclor-1260	0.026 U	0.025 U	0.026 U	0.025 U	0.025 U	NS	NS	NS	NS	NS
Total Metals (MG/KG)										
Antimony	2.75	0.991 U	1.05 U	1.02 U	0.986 U	NS	NS	NS	NS	NS
Arsenic	1.71 J	1.73 J	2.66 J	2.53 J	2.57	NS	NS	NS	NS	NS
Barium	64.7	91	36.1	63.9	46.3	NS	NS	NS	NS	NS
Cadmium	0.182 U	0.155 U	0.168 U	0.127 U	0.123 U	NS	NS	NS	NS	NS
Chromium	24.2	25.8	18.7	30.8	16.3	NS	NS	NS	NS	NS
Cobalt	6.45	3.54	2.79	3.75	2.66	NS	NS	NS	NS	NS
Iron	8,740	9,720	6,870	11,400	6,390	NS	NS	NS	NS	NS
Lead	9.48	7.05	3.9	6.66	6.17	NS	NS	NS	NS	NS
Manganese	193	178	57.2	121	137	NS	NS	NS	NS	NS
Mercury	0.2	0.0767	0.042	0.0118 J	0.0275	NS	NS	NS	NS	NS
Nickel	12.8	11.5	9.58	11.3	7.59	NS	NS	NS	NS	NS
Silver	0.288 U	0.0804 J	0.288 U	0.28 U	0.271 U	NS	NS	NS	NS	NS
Vanadium	19.2	22.2	16.7	26.2	15.4	NS	NS	NS	NS	NS
Zinc	25.6	21.7	16	20.6	16.3	NS	NS	NS	NS	NS

Notes:

D - Compound identified in an analysis at a secondary dilution factor.

J - Analyte present. Value may or may not be accurate or precise

NS - Not sampled

Q - One or more QC criteria outside acceptance limits

U - The material was analyzed for, but not detected

MG/KG - Milligrams per kilogram

TABLE B-11

Phase II Subsurface Soil Raw Analytical Data - 5th Street Disposal Area

TRDA Remedial Investigation Report

Harvey Point Defense Testing Activity

Hertford, North Carolina

Sample ID	TR-5th-SB07-01-03-0514	TR-5th-SB07-03-04-0514	TR-5th-SB08-01-03-0514	TR-5th-SB08-03-05-0514	TR-5th-SB09-01-03-0514	TR-5th-SB09-03-05-0514	TR-5th-SB10-01-03-0514	TR-5th-SB10-03-04-0514	TR-5th-SB10D-01-03-0514	TR-5th-SB11-01-03-0514
Sample Date	5/7/14	5/7/14	5/7/14	5/7/14	5/7/14	5/7/14	5/7/14	5/7/14	5/7/14	5/7/14
Chemical Name										
Volatile Organic Compounds (MG/KG)										
1,2,3-Trichlorobenzene	0.0009 U	0.001 U	0.001 UQ	0.0011 U	0.0009 U	0.0011 U	0.0012 U	0.001 U	0.0009 U	0.001 U
1,2,4-Trichlorobenzene	0.0009 U	0.001 U	0.001 U	0.0011 U	0.0009 U	0.0011 U	0.0012 U	0.001 U	0.0009 U	0.001 U
1,3-Dichlorobenzene	0.0009 U	0.001 U	0.001 U	0.0011 U	0.0009 U	0.0011 U	0.0012 U	0.001 U	0.0009 U	0.001 U
1,4-Dichlorobenzene	0.0009 U	0.001 U	0.001 U	0.0011 U	0.0009 U	0.0011 U	0.0012 U	0.001 U	0.0009 U	0.001 U
1,4-Dioxane	NS	NS	NS	NS	NS	NS	NS	NS	NS	NS
Benzene	0.0009 U	0.001 U	0.001 U	0.0011 U	0.0009 U	0.0011 U	0.0012 U	0.001 U	0.0009 U	0.001 U
Carbon disulfide	0.0046 U	0.005 U	0.0048 UQ	0.0057 U	0.0046 U	0.0054 U	0.0058 U	0.0049 U	0.0047 U	0.005 U
Chlorobenzene	0.0009 U	0.001 U	0.001 U	0.0011 U	0.0009 U	0.0011 U	0.0012 U	0.001 U	0.0009 U	0.001 U
Cyclohexane	0.0009 U	0.001 U	0.001 U	0.0011 U	0.0009 U	0.0011 U	0.0012 U	0.001 U	0.0009 U	0.001 U
Dichlorodifluoromethane (Freon-12)	0.0009 UQ	0.001 UQ	0.001 UQ	0.0011 UQ	0.0009 U	0.0011 U	0.0012 U	0.001 UQ	0.0009 UQ	0.001 U
Ethylbenzene	0.0009 U	0.001 U	0.001 U	0.0011 U	0.0009 U	0.0011 U	0.0012 U	0.001 U	0.0009 U	0.001 U
Isopropylbenzene	0.0009 U	0.001 U	0.001 U	0.0011 U	0.0009 U	0.0011 U	0.0012 U	0.001 U	0.0009 U	0.001 U
m- and p-Xylene	0.0018 U	0.002 U	0.0019 U	0.0023 U	0.0018 U	0.0022 U	0.0023 U	0.0019 U	0.0019 U	0.002 U
Methyl acetate	0.0046 U	0.005 U	0.0048 U	0.0057 U	0.0046 U	0.0054 U	0.0058 U	0.0049 U	0.0047 U	0.005 U
Methylene chloride	0.0046 U	7.00E-04 J	0.0048 U	0.0057 U	0.0046 U	0.0054 U	0.0058 U	0.0049 U	0.0047 U	0.005 U
Toluene	0.0009 U	0.001 U	0.001 U	0.0011 U	0.0009 U	0.0011 U	0.0012 U	0.001 U	0.0009 U	0.001 U
Semivolatile Organic Compounds (MG/KG)										
Acenaphthene	0.033 U	0.032 U	0.032 U	0.034 U	0.031 U	0.035 U	0.031 U	0.034 U	0.033 U	0.033 U
Acenaphthylene	0.033 U	0.032 U	0.032 U	0.034 U	0.031 U	0.035 U	0.031 U	0.034 U	0.033 U	0.033 U
Anthracene	0.033 U	0.032 U	0.032 U	0.034 U	0.031 U	0.035 U	0.031 U	0.034 U	0.033 U	0.033 U
Benzo(a)anthracene	0.033 U	0.032 U	0.057	0.034 U	0.027 J	0.035 U	0.031 U	0.034 U	0.033 U	0.029 J
Benzo(a)pyrene	0.033 U	0.032 U	0.024 J	0.034 U	0.031 U	0.035 U	0.031 U	0.034 U	0.033 U	0.033 U
Benzo(b)fluoranthene	0.033 U	0.032 U	0.057	0.034 U	0.031 U	0.035 U	0.031 U	0.034 U	0.033 U	0.033 U
Benzo(g,h,i)perylene	0.033 U	0.032 U	0.035 J	0.034 U	0.031 U	0.035 U	0.031 U	0.034 U	0.033 U	0.033 U
Benzo(k)fluoranthene	0.033 U	0.032 U	0.032 U	0.034 U	0.031 U	0.035 U	0.031 U	0.034 U	0.033 U	0.033 U
Chrysene	0.033 U	0.032 U	0.031 J	0.034 U	0.031 U	0.035 U	0.031 U	0.034 U	0.033 U	0.033 U
Dibenz(a,h)anthracene	0.033 U	0.032 U	0.032 U	0.034 U	0.031 U	0.035 U	0.031 U	0.034 U	0.033 U	0.033 U
Fluoranthene	0.033 U	0.032 U	0.045	0.034 U	0.031 U	0.035 U	0.031 U	0.034 U	0.033 U	0.033 U
Fluorene	0.033 U	0.032 U	0.032 U	0.034 U	0.031 U	0.035 U	0.031 U	0.034 U	0.033 U	0.033 U
Indeno(1,2,3-cd)pyrene	0.033 U	0.032 U	0.024 J	0.034 U	0.031 U	0.035 U	0.031 U	0.034 U	0.033 U	0.033 U
Phenanthrene	0.033 U	0.032 U	0.026 J	0.034 U	0.031 U	0.035 U	0.031 U	0.034 U	0.033 U	0.033 U
Pyrene	0.033 U	0.032 U	0.054	0.034 U	0.031 U	0.035 U	0.031 U	0.034 U	0.033 U	0.033 U
Pesticide/Polychlorinated Biphenyls (MG/KG)										
4,4'-DDD	0.0041 UD	0.0041 UD	0.004 UD	0.0043 UD	0.0039 UD	0.0044 UD	0.004 UD	0.0043 UD	0.0041 UD	0.0041 UD
Aroclor-1254	0.024 U	0.024 U	2.4 DP	0.025 UQ	0.023 U	0.026 U	0.023 U	0.025 U	0.024 U	0.026 JQ
Aroclor-1260	0.024 U	0.016 J	5.7 D	0.02 J	0.024 J	0.026 U	0.023 U	0.025 U	0.024 U	0.048 J
Total Metals (MG/KG)										
Antimony	0.972 U	0.957 U	0.775 J	1.02 U	0.928 U	1.03 U	0.932 U	1.01 U	0.97 U	1.06 J
Arsenic	1.68 J	1.16 J	7.56 JD	1.93 J	2.58 J	2.96	1.27 J	3.01 J	1.93 J	2.14 J
Barium	54.1	66.6	91.8 D	73.1	122	63.4	67.4	68.5	72.9	54.7
Cadmium	0.052 J	0.153 U	1.29 JD	0.165 U	0.141 U	0.129 U	0.157 U	0.177 U	0.121 U	0.155 J
Chromium	18.6	21.2	55.5 D	34.2	24.4	26.1	16.4	29.4	16.8	18.9
Cobalt	2.8	2.98	6.13 D	4.42	3.34	3.33	2.84	3.34	3.14	5.84
Iron	6,760	7,230	51,200 D	13,000	11,500	9,230	6,100	9,060	6,730	9,530
Lead	69.2	6.97	234 D	9.06	9.54	6.24	7.18	6.62	7.49	26.8
Mercury	0.0197 J	0.014 U	0.327	0.00478 J	0.0609	0.0177 J	0.0474	0.0215 J	0.0358	0.139
Nickel	7.55	8.93	24.8 D	13.3	9.66	12.1	7.07	11.8	7.2	7.27
Silver	0.267 U	0.263 U	0.134 J	0.28 U	0.0911 J	0.283 U	0.256 U	0.277 U	0.267 U	0.268 U
Zinc	70.4 D	23.4	239 D	26.8	22	22.4	17.9	20.9	18.3	60.9

Notes:

D - Compound identified in an analysis at a secondary dilution factor.

J - Analyte present. Value may or may not be accurate or precise

P - Difference between the concentration on the two columns is greater than 25%; the lower of the two values is reported.

Q - One or more QC criteria outside acceptance limits

U - The material was analyzed for, but not detected

MG/KG - Milligram per kilogram

TABLE B-11

Phase II Subsurface Soil Raw Analytical Data - 5th Street Disposal Area

TRDA Remedial Investigation Report

Harvey Point Defense Testing Activity

Hertford, North Carolina

Sample ID	TR-5th-SB11-03-05-0514	TR-5th-SB12-01-03-0514	TR-5th-SB12-03-05-0514	TR-5th-SB13-01-03-0514	TR-5th-SB13-03-05-0514	TR-5th-SB14-01-03-0514	TR-5th-SB14-03-05-0514	TR-5th-SB15-01-03-0514	TR-5th-SB16-01-03-0514	TR-5th-SB16-03-04-0514	TR-5th-SB17-01-03-0514
Sample Date	5/7/14	5/7/14	5/7/14	5/7/14	5/7/14	5/7/14	5/7/14	5/7/14	5/7/14	5/7/14	5/7/14
Chemical Name											
Volatile Organic Compounds (MG/KG)											
1,2,3-Trichlorobenzene	0.001 U	0.001 U	0.001 U	0.001 U	0.0011 U	0.001 U	0.0011 U	0.0013 U	0.0011 U	0.001 U	0.0011 U
1,2,4-Trichlorobenzene	0.001 U	0.001 U	0.001 U	0.001 U	0.0011 U	0.001 U	0.0011 U	0.0013 U	0.0011 U	0.001 U	0.0011 U
1,3-Dichlorobenzene	0.001 U	0.001 U	0.001 U	0.001 U	0.0011 U	0.001 U	0.0011 U	0.0013 U	0.0011 U	0.001 U	0.0011 U
1,4-Dichlorobenzene	0.001 U	0.001 U	0.001 U	0.001 U	0.0011 U	0.001 U	0.0011 U	0.0013 U	0.0011 U	0.001 U	0.0011 U
1,4-Dioxane	NS	NS	NS	NS	NS	NS	NS	NS	NS	NS	NS
Benzene	0.001 U	0.001 U	0.001 U	0.001 U	0.0011 U	0.001 U	0.0011 U	0.0013 U	0.0011 U	0.001 U	0.0011 U
Carbon disulfide	0.005 U	0.005 U	0.0049 U	0.0049 U	0.0053 U	0.0049 U	0.0056 U	0.0066 U	0.0053 U	0.0052 U	0.0056 U
Chlorobenzene	0.001 U	0.001 U	0.001 U	0.001 U	0.0011 U	0.001 U	0.0011 U	0.0013 U	0.0011 U	0.001 U	0.0011 U
Cyclohexane	0.001 U	0.001 U	0.001 U	0.001 U	0.0011 U	0.001 U	0.0011 U	0.0013 U	0.0011 U	0.001 U	0.0011 U
Dichlorodifluoromethane (Freon-12)	0.001 U	0.001 U	0.001 U	0.001 U	0.0011 U	0.001 U	0.0011 U	0.0013 U	0.0011 U	0.001 U	0.0011 UQ
Ethylbenzene	0.001 U	0.001 U	0.001 U	0.001 U	0.0011 U	0.001 U	0.0011 U	0.0013 U	0.0011 U	0.001 U	0.0011 U
Isopropylbenzene	0.001 U	0.001 U	0.001 U	0.001 U	0.0011 U	0.001 U	0.0011 U	0.0013 U	0.0011 U	0.001 U	0.0011 U
m- and p-Xylene	0.002 U	0.002 U	0.002 U	0.002 U	0.0021 U	0.002 U	0.0022 U	0.0026 U	0.0021 U	0.0021 U	0.0022 U
Methyl acetate	0.005 U	0.005 U	0.0049 U	0.0049 U	0.0053 U	0.0049 U	0.0056 U	0.0066 U	0.0053 U	0.0052 U	0.0056 U
Methylene chloride	0.005 U	0.005 U	8.00E-04 J	0.0049 U	0.0053 U	0.0049 U	0.0056 U	0.0066 U	0.0053 U	7.00E-04 J	0.0056 U
Toluene	0.001 U	0.001 U	0.001 U	0.001 U	0.0011 U	0.001 U	0.0011 U	0.0017 J	0.0011 U	0.001 U	0.0011 U
Semivolatile Organic Compounds (MG/KG)											
Acenaphthene	0.031 U	0.035 U	0.032 U	0.032 U	0.034 U	0.033 U	0.034 U	0.036 U	0.033 U	0.032 U	0.034 U
Acenaphthylene	0.031 U	0.035 U	0.032 U	0.032 U	0.034 U	0.033 U	0.034 U	0.036 U	0.033 U	0.032 U	0.034 U
Anthracene	0.031 U	0.035 U	0.032 U	0.032 U	0.034 U	0.033 U	0.034 U	0.036 U	0.033 U	0.032 U	0.034 U
Benzo(a)anthracene	0.031 U	0.038 J	0.032 U	0.032 U	0.034 U	0.033 U	0.034 U	0.036 U	0.033 U	0.028 J	0.046
Benzo(a)pyrene	0.031 U	0.035 U	0.032 U	0.032 U	0.034 U	0.033 U	0.034 U	0.036 U	0.033 U	0.032 U	0.053
Benzo(b)fluoranthene	0.031 U	0.035 U	0.032 U	0.032 U	0.034 U	0.033 U	0.034 U	0.036 U	0.033 U	0.032 U	0.089
Benzo(g,h,i)perylene	0.031 U	0.035 U	0.032 U	0.032 U	0.034 U	0.033 U	0.034 U	0.037 J	0.034 J	0.032 U	0.069
Benzo(k)fluoranthene	0.031 U	0.035 U	0.032 U	0.032 U	0.034 U	0.033 U	0.034 U	0.036 U	0.033 U	0.032 U	0.028 J
Chrysene	0.031 U	0.035 U	0.032 U	0.032 U	0.034 U	0.033 U	0.034 U	0.036 U	0.033 U	0.032 U	0.034 U
Dibenz(a,h)anthracene	0.031 U	0.035 U	0.032 U	0.032 U	0.034 U	0.033 U	0.034 U	0.036 U	0.033 U	0.032 U	0.034 U
Fluoranthene	0.031 U	0.026 J	0.032 U	0.032 U	0.034 U	0.033 U	0.034 U	0.036 U	0.033 U	0.032 U	0.034 U
Fluorene	0.031 U	0.035 U	0.032 U	0.032 U	0.034 U	0.033 U	0.034 U	0.036 U	0.033 U	0.032 U	0.034 U
Indeno(1,2,3-cd)pyrene	0.031 U	0.035 U	0.032 U	0.032 U	0.034 U	0.033 U	0.034 U	0.036 U	0.02 J	0.032 U	0.051
Phenanthrene	0.031 U	0.035 U	0.032 U	0.032 U	0.034 U	0.033 U	0.034 U	0.036 U	0.033 U	0.032 U	0.034 U
Pyrene	0.031 U	0.02 J	0.032 U	0.032 U	0.034 U	0.033 U	0.034 U	0.036 U	0.033 U	0.032 U	0.025 J
Pesticide/Polychlorinated Biphenyls (MG/KG)											
4,4'-DDD	0.0039 UD	0.0043 UD	0.004 UD	0.004 UD	0.0043 UD	0.0041 UD	0.0043 UD	0.0045 UD	0.0042 UD	0.004 UD	0.0043 UD
Aroclor-1254	0.023 UQ	0.045 JQ	0.024 U	0.02 JPQ	0.025 U	0.024 U	0.025 U	0.026 U	0.025 U	0.024 U	0.21
Aroclor-1260	0.072	0.066	0.024 U	0.089	0.025 U	0.024 U	0.025 U	0.026 U	0.035 J	0.024 U	0.18
Total Metals (MG/KG)											
Antimony	0.929 U	1.02 U	0.945 U	0.943 U	1 U	0.972 U	1 U	1.06 U	0.986 U	0.945 U	0.434 J
Arsenic	1.76 J	1.94 J	2.04 J	2.87 J	1.81 J	2.02 J	3.16	1.34 J	5.21	2.05 J	3.21 J
Barium	67.1	61.8	88.7	109	105	85.6	69.3	10.7	143	65.1	58.1
Cadmium	0.0287 J	0.536	0.131 U	0.0791 J	0.163 U	0.164 U	0.146 U	0.0492 J	0.411	0.16 U	0.51
Chromium	14.7	25.5	13.4	26.2	36.1	28.1	24.6	2.66	12.1	26.5	28.3
Cobalt	3.09	3.44	3.9	4.67	4.05	3.56	3.56	0.773	4	3.06	3.75
Iron	6,040	9,760	5,790	10,500	11,100	9,420	9,560	1,410	6,780	10,000	10,800
Lead	6.79	77.3	6.44	23.9	8.92	7.24	5.34	2.64	73.9	6.87	101
Mercury	0.0837	0.117	0.0453	0.0805	0.0167 J	0.019 J	0.00535 J	0.0123 J	0.0313	0.027	0.401
Nickel	7.36	13.9	7.94	12.4	14.6	11.5	11.3	1.64	7.95	11.7	22.9
Silver	0.255 U	0.0882 J	0.26 U	0.069 J	0.276 U	0.267 U	0.276 U	0.29 U	0.271 U	0.26 U	0.0717 J
Zinc	23	216 D	21.3	36.6	26.5	26.6	21.8	4.59	244 D	22.3	72.8

Notes:

D - Compound identified in an analysis at a secondary dilution factor.

J - Analyte present. Value may or may not be accurate or precise

P - Difference between the concentration on the two columns is greater than 25%; the lower of the two values is reported.

Q - One or more QC criteria outside acceptance limits

U - The material was analyzed for, but not detected

MG/KG - Milligram per kilogram

TABLE B-11

Phase II Subsurface Soil Raw Analytical Data - 5th Street Disposal Area

TRDA Remedial Investigation Report

Harvey Point Defense Testing Activity

Hertford, North Carolina

Sample ID	TR-5th-SB18-01-03-0514	TR-5th-SB18-03-05-0514	TR-5th-SB18D-01-03-0514	TR-5th-SB19-01-03-0514	TR-5th-SB19-03-04-0514	TR-5th-SB19D-03-04-0514	TR-5th-SB20-01-03-0514	TR-5th-SB20-03-05-0514
Sample Date	5/7/14	5/7/14	5/7/14	5/7/14	5/7/14	5/7/14	5/7/14	5/7/14
Chemical Name								
Volatile Organic Compounds (MG/KG)								
1,2,3-Trichlorobenzene	0.001 U	0.0011 U	0.0011 U	NS	NS	NS	NS	NS
1,2,4-Trichlorobenzene	0.001 U	0.0011 U	0.0011 U	NS	NS	NS	NS	NS
1,3-Dichlorobenzene	0.001 U	0.0011 U	0.0011 U	NS	NS	NS	NS	NS
1,4-Dichlorobenzene	0.001 U	0.0011 U	0.0011 U	NS	NS	NS	NS	NS
1,4-Dioxane	NS	NS	NS	0.00654 U	0.00646 U	0.00618 U	0.00602 U	0.0061 U
Benzene	0.001 U	0.0011 U	0.0011 U	NS	NS	NS	NS	NS
Carbon disulfide	0.005 U	0.0056 U	0.0053 U	NS	NS	NS	NS	NS
Chlorobenzene	0.001 U	0.0011 U	0.0011 U	NS	NS	NS	NS	NS
Cyclohexane	0.001 U	0.0011 U	0.0011 U	NS	NS	NS	NS	NS
Dichlorodifluoromethane (Freon-12)	0.001 UQ	0.0011 UQ	0.0011 UQ	NS	NS	NS	NS	NS
Ethylbenzene	0.001 U	0.0011 U	0.0011 U	NS	NS	NS	NS	NS
Isopropylbenzene	0.001 U	0.0011 U	0.0011 U	NS	NS	NS	NS	NS
m- and p-Xylene	0.002 U	0.0023 U	0.0021 U	NS	NS	NS	NS	NS
Methyl acetate	0.005 U	0.0056 U	0.0053 U	NS	NS	NS	NS	NS
Methylene chloride	0.005 U	0.0056 U	0.0053 U	NS	NS	NS	NS	NS
Toluene	0.001 U	0.0011 U	0.0011 U	NS	NS	NS	NS	NS
Semivolatile Organic Compounds (MG/KG)								
Acenaphthene	0.018 J	0.03 U	0.032 U	NS	NS	NS	NS	NS
Acenaphthylene	0.086	0.03 U	0.032 U	NS	NS	NS	NS	NS
Anthracene	0.17	0.03 U	0.067	NS	NS	NS	NS	NS
Benzo(a)anthracene	0.52	0.03 J	0.25	NS	NS	NS	NS	NS
Benzo(a)pyrene	0.38	0.03 U	0.19	NS	NS	NS	NS	NS
Benzo(b)fluoranthene	0.66	0.03 U	0.35	NS	NS	NS	NS	NS
Benzo(g,h,i)perylene	0.2	0.03 U	0.11	NS	NS	NS	NS	NS
Benzo(k)fluoranthene	0.28	0.03 U	0.12	NS	NS	NS	NS	NS
Chrysene	0.52	0.014 J	0.25	NS	NS	NS	NS	NS
Dibenz(a,h)anthracene	0.088	0.03 U	0.038 J	NS	NS	NS	NS	NS
Fluoranthene	1.2	0.03 U	0.43	NS	NS	NS	NS	NS
Fluorene	0.027 J	0.03 U	0.032 U	NS	NS	NS	NS	NS
Indeno(1,2,3-cd)pyrene	0.22 Q	0.03 UQ	0.11 Q	NS	NS	NS	NS	NS
Phenanthrene	0.24	0.03 U	0.057	NS	NS	NS	NS	NS
Pyrene	1.2	0.03 U	0.48	NS	NS	NS	NS	NS
Pesticide/Polychlorinated Biphenyls (MG/KG)								
4,4'-DDD	0.0039 UD	0.0038 UD	0.004 UD	NS	NS	NS	NS	NS
Aroclor-1254	0.18 PQ	0.25 PQ	0.19	NS	NS	NS	NS	NS
Aroclor-1260	0.16	0.11	0.23	NS	NS	NS	NS	NS
Total Metals (MG/KG)								
Antimony	0.599 J	0.9 U	0.952 U	NS	NS	NS	NS	NS
Arsenic	6.44 D	1.65 J	2.41 JD	NS	NS	NS	NS	NS
Barium	85.1 D	44.2	61.1 D	NS	NS	NS	NS	NS
Cadmium	7.19 D	0.111 J	0.539 D	NS	NS	NS	NS	NS
Chromium	25.2 D	14.1	20.4 D	NS	NS	NS	NS	NS
Cobalt	3.89 D	2.37	3.1 D	NS	NS	NS	NS	NS
Iron	20,900 D	6,420	23,600 D	NS	NS	NS	NS	NS
Lead	890 D	39.8	92 D	NS	NS	NS	NS	NS
Mercury	0.0765	0.196	0.0687	NS	NS	NS	NS	NS
Nickel	11.8 D	6.6	13.6 D	NS	NS	NS	NS	NS
Silver	0.138 J	0.248 U	0.262 U	NS	NS	NS	NS	NS
Zinc	483 D	35.8	103 D	NS	NS	NS	NS	NS

Notes:

D - Compound identified in an analysis at a secondary dilution factor.

J - Analyte present. Value may or may not be accurate or precise

P - Difference between the concentration on the two columns is greater than 25%; the lower of the two values is reported.

Q - One or more QC criteria outside acceptance limits

U - The material was analyzed for, but not detected

MG/KG - Milligram per kilogram

TABLE B-12

Remedial Action Confirmation Sampling Raw Analytical Data - 2nd Street Disposal Area

TRDA Remedial Investigation Report

Harvey Point Defense Testing Activity

Hertford, North Carolina

Sample ID	TR-2ND-CSF01-1015	TR-2ND-CSF02-1015	TR-2ND-CSF03-1015	TR-2ND-CSF03D-1015	TR-2ND-CSF04-1015	TR-2ND-CSF04A-1015
Sample Date	10/23/15	10/23/15	10/23/15	10/23/15	10/23/15	10/26/15
Chemical Name						
Volatile Organic Compounds (MG/KG)						
1,1,1-Trichloroethane	0.00278 U	0.00303 U	0.00284 U	0.00291 U	NS	0.00261 U
1,1,2,2-Tetrachloroethane	0.00278 U	0.00303 U	0.00284 U	0.00291 U	NS	0.00261 U
1,1,2-Trichloro-1,2,2-trifluoroethane (Freon-113)	0.00556 U	0.00606 U	0.00569 U	0.00582 U	NS	0.00521 U
1,1,2-Trichloroethane	0.00278 U	0.00303 U	0.00284 U	0.00291 U	NS	0.00261 U
1,1-Dichloroethane	0.00278 U	0.00303 U	0.00284 U	0.00291 U	NS	0.00261 U
1,1-Dichloroethene	0.00278 U	0.00303 U	0.00284 U	0.00291 U	NS	0.00261 U
1,2,3-Trichlorobenzene	0.00278 XQU	0.00303 XQU	0.00284 XQU	0.00291 XQU	NS	0.00261 XU
1,2,4-Trichlorobenzene	0.00278 XQU	0.00303 XQU	0.00284 XQU	0.00291 XQU	NS	0.00261 XU
1,2-Dibromo-3-chloropropane	0.00556 U	0.00606 U	0.00569 U	0.00582 U	NS	0.00521 U
1,2-Dibromoethane	0.00278 U	0.00303 U	0.00284 U	0.00291 U	NS	0.00261 U
1,2-Dichlorobenzene	0.00278 U	0.00303 U	0.00284 U	0.00291 U	NS	0.00261 U
1,2-Dichloroethane	0.00278 U	0.00303 U	0.00284 U	0.00291 U	NS	0.00261 U
1,2-Dichloropropane	0.00278 U	0.00303 U	0.00284 U	0.00291 U	NS	0.00261 U
1,3-Dichlorobenzene	0.00278 U	0.00303 U	0.00284 U	0.00291 U	NS	0.00261 U
1,4-Dichlorobenzene	0.00278 U	0.00303 U	0.00284 U	0.00291 U	NS	0.00261 U
1,4-Dioxane	0.111 U	0.121 U	0.114 U	0.116 U	NS	0.104 U
2-Butanone	0.00556 U	0.00606 U	0.00569 U	0.00582 U	NS	0.00521 U
2-Hexanone	0.00556 U	0.00606 U	0.00569 U	0.00582 U	NS	0.00521 U
4-Methyl-2-pentanone	0.00556 U	0.00606 U	0.00569 U	0.00582 U	NS	0.00521 U
Acetone	0.00865 J	0.00929 J	0.00879 J	0.0163 J	NS	0.015 J
Benzene	0.00278 U	0.00303 U	0.00284 U	0.00291 U	NS	0.00261 U
Bromochloromethane	0.00278 U	0.00303 U	0.00284 U	0.00291 U	NS	0.00261 U
Bromodichloromethane	0.00278 U	0.00303 U	0.00284 U	0.00291 U	NS	0.00261 U
Bromoform	0.00278 U	0.00303 U	0.00284 U	0.00291 U	NS	0.00261 U
Bromomethane	0.00556 U	0.00606 U	0.00569 U	0.00582 U	NS	0.00521 U
Carbon disulfide	0.00278 U	0.00303 U	0.00284 U	0.00291 U	NS	0.00261 U
Carbon tetrachloride	0.00278 U	0.00303 U	0.00284 U	0.00291 U	NS	0.00261 U
Chlorobenzene	0.00278 U	0.00303 U	0.00284 U	0.00291 U	NS	0.00261 U
Chloroethane	0.00556 U	0.00606 U	0.00569 U	0.00582 U	NS	0.00521 U
Chloroform	0.00278 U	0.00303 U	0.00284 U	0.00291 U	NS	0.00261 U
Chloromethane	0.00556 U	0.00606 U	0.00569 U	0.00582 U	NS	0.00521 U
cis-1,2-Dichloroethene	0.00278 U	0.00303 U	0.00284 U	0.00291 U	NS	0.00261 U
cis-1,3-Dichloropropene	0.00278 U	0.00303 U	0.00284 U	0.00291 U	NS	0.00261 U
Cyclohexane	0.00278 U	0.00303 U	0.00284 U	0.00291 U	NS	0.00261 U
Dibromochloromethane	0.00278 U	0.00303 U	0.00284 U	0.00291 U	NS	0.00261 U
Dichlorodifluoromethane (Freon-12)	0.00556 U	0.00606 U	0.00569 U	0.00582 U	NS	0.00521 U
Ethylbenzene	0.00278 U	0.00303 U	0.00284 U	0.00291 U	NS	0.00261 U
Isopropylbenzene	0.00278 U	0.00303 U	0.00284 U	0.00291 U	NS	0.00261 U
m- and p-Xylene	0.00556 U	0.00606 U	0.00569 U	0.00582 U	NS	0.00521 U
Methyl Acetate	0.00556 U	0.00606 U	0.00569 U	0.00582 U	NS	0.00521 U
Methylcyclohexane	0.00278 U	0.00303 U	0.00284 U	0.00291 U	NS	0.00261 U
Methylene chloride	0.00556 U	0.00606 U	0.00569 U	0.00582 U	NS	0.00521 U
Methyl-tert-Butyl Ether (MTBE)	0.00278 U	0.00303 U	0.00284 U	0.00291 U	NS	0.00261 U
o-Xylene	0.00278 U	0.00303 U	0.00284 U	0.00291 U	NS	0.00261 U
Styrene	0.00278 U	0.00303 U	0.00284 U	0.00291 U	NS	0.00261 U
Tetrachloroethene	0.00278 U	0.00303 U	0.00284 U	0.00291 U	NS	0.00261 U
Toluene	0.00278 U	0.00303 U	0.00284 U	0.00291 U	NS	0.00261 U
trans-1,2-Dichloroethene	0.00278 U	0.00303 U	0.00284 U	0.00291 U	NS	0.00261 U
trans-1,3-Dichloropropene	0.00278 U	0.00303 U	0.00284 U	0.00291 U	NS	0.00261 U
Trichloroethene	0.00278 U	0.00303 U	0.00284 U	0.00291 U	NS	0.00261 U
Trichlorofluoromethane (Freon-11)	0.00556 U	0.00606 U	0.00569 U	0.00582 U	NS	0.00521 U
Vinyl chloride	0.00278 U	0.00303 U	0.00284 U	0.00291 U	NS	0.00261 U
Xylene, Total	0.00834 U	0.00909 U	0.00853 U	0.00873 U	NS	0.00782 U
Semivolatile Organic Compounds (MG/KG)						
Benzo(a)anthracene	0.00314 J	0.00412 U	0.00401 U	0.00401 U	0.00391 U	NS
Benzo(a)pyrene	0.00288 J	0.00412 U	0.00401 U	0.00401 U	0.00391 U	NS
Benzo(b)fluoranthene	0.00437 J	0.00412 U	0.00401 U	0.00401 U	0.00391 U	NS
Dibenz(a,h)anthracene	0.00416 U	0.00412 U	0.00401 U	0.00401 U	0.00391 U	NS
Indeno(1,2,3-cd)pyrene	0.00273 J	0.00412 U	0.00401 U	0.00401 U	0.00391 U	NS
Naphthalene	0.00416 U	0.00412 U	0.00401 U	0.00401 U	0.00391 U	NS
Pesticide/Polychlorinated Biphenyls (MG/KG)						
Aroclor-1254	0.0103 U	0.0105 U	0.0104 U	0.0103 U	0.00995 U	NS
Aroclor-1260	0.0103 U	0.0105 U	0.0104 U	0.0103 U	0.00995 U	NS
Explosives (MG/KG)						
1,3,5-Trinitrobenzene	0.04 U	0.0385 U	0.0388 U	0.0381 U	0.0385 U	NS
1,3-Dinitrobenzene	0.04 U	0.0385 U	0.0388 U	0.0381 U	0.0385 U	NS
2,4,6-Trinitrotoluene	0.04 U	0.0385 U	0.0388 U	0.0381 U	0.0385 U	NS
2,4-Dinitrotoluene	0.04 U	0.0385 U	0.0388 U	0.0381 U	0.0385 U	NS
2,6-Dinitrotoluene	0.04 U	0.0385 U	0.0388 U	0.0381 U	0.0385 U	NS
2-Amino-4,6-dinitrotoluene	0.04 QU	0.0385 QU	0.0388 QU	0.0381 QU	0.0385 QU	NS
2-Nitrotoluene	0.04 U	0.0385 U	0.0388 U	0.0381 U	0.0385 U	NS
3,5-Dinitroaniline	0.04 U	0.0385 U	0.0388 U	0.0381 U	0.0385 U	NS
3-Nitrotoluene	0.04 U	0.0385 U	0.0388 U	0.0381 U	0.0385 U	NS
4-Amino-2,6-dinitrotoluene	0.04 QU	0.0385 QU	0.0388 QU	0.0381 QU	0.0385 QU	NS
4-Nitrotoluene	0.04 U	0.0385 U	0.0388 U	0.0381 U	0.0385 U	NS
HMX	0.04 U	0.0385 U	0.0388 U	0.0381 U	0.0385 U	NS
Nitrobenzene	0.04 QU	0.0385 QU	0.0388 QU	0.0381 QU	0.0385 QU	NS
Nitroglycerin	0.1 U	0.0962 U	0.0971 U	0.0952 U	0.0962 U	NS
Perchlorate	0.0025 U	0.0025 U	0.00242 U	0.00242 U	0.00244 U	NS
PETN	0.1 U	0.0962 U	0.0971 U	0.0952 U	0.0962 U	NS
RDX	0.04 U	0.0385 U	0.0388 U	0.0381 U	0.0385 U	NS
Tetryl	0.04 U	0.0385 U	0.0388 U	0.0381 U	0.0385 U	NS
Total Metals (MG/KG)						
Antimony	0.591 MNU	0.513 MNU	0.501 MNU	0.507 MNU	0.549 MNU	NS
Arsenic	3.67	4.7	4.13	4.29	3.81	NS
Cadmium	0.131 U	0.128 U	0.125 U	0.127 U	0.122 U	NS
Cobalt	3.3	4.32	4.32	4.22	4.07	NS
Copper	10.7	10.5	11.2	10.5	9.89	NS
Iron	9,460	9,910	10,500	10,100	10,300	NS
Lead	4.65 E	4.97	6.64	5.7	5.95	NS
Manganese	87.9 N	88.4 N	91 N	92.7 N	91.1 N	NS
Mercury	0.0168 J	0.0337 U	0.0333 U	0.0286 J	0.0213 J	NS
Silver	0.131 MU	0.128 MU	0.125 MU	0.127 MU	0.122 MU	NS
Vanadium	22.7	24.4	26.2	25.2	25.6	NS
Zinc	22.6 EN	26.1 N	29.4 N	25.9 N	25.7 N	NS

Notes:

E - Concentration exceeds calibration range

J - Analyte present. Value may or may not be accurate or precise

MG/KG - Milligram per kilogram

M - Sample matrix interfered with the quantitation of the analyte; DL/LOD/LOQ have been raised.

N - MS/MSD accuracy and/or precision are outside acceptance limits

NS - Not sampled

Q - LCS/LCSD accuracy and/or precision are outside acceptance limits

U - The material was analyzed for, but not detected

X - Potential positive bias due to an ICV or CCV exceedance

Y - Potential negative bias due to an ICV or CCV exceedance

TABLE B-12

Remedial Action Confirmation Sampling Raw Analytical Data - 2nd Street Disposal Area

TRDA Remedial Investigation Report

Harvey Point Defense Testing Activity

Hertford, North Carolina

Sample ID	TR-2ND-CSF05-1015	TR-2ND-CSF06-1015	TR-2ND-CSF07-1015	TR-2ND-CSF08-1015	TR-2ND-CSF09-1015	TR-2ND-CSF10-1015
Sample Date	10/23/15	10/23/15	10/23/15	10/23/15	10/23/15	10/23/15
Chemical Name						
Volatile Organic Compounds (MG/KG)						
1,1,1-Trichloroethane	0.00272 U	0.00281 U	0.00283 U	0.00312 U	0.0031 U	0.00292 U
1,1,2,2-Tetrachloroethane	0.00272 U	0.00281 U	0.00283 U	0.00312 U	0.0031 U	0.00292 U
1,1,2-Trichloro-1,2,2-trifluoroethane (Freon-113)	0.00544 U	0.00561 U	0.00566 U	0.00625 U	0.0062 U	0.00585 U
1,1,2-Trichloroethane	0.00272 U	0.00281 U	0.00283 U	0.00312 U	0.0031 U	0.00292 U
1,1-Dichloroethane	0.00272 U	0.00281 U	0.00283 U	0.00312 U	0.0031 U	0.00292 U
1,1-Dichloroethene	0.00272 U	0.00281 U	0.00283 U	0.00312 U	0.0031 U	0.00292 U
1,2,3-Trichlorobenzene	0.00272 XQU	0.00281 XQU	0.00283 XQU	0.00312 XQU	0.0031 XQU	0.00292 XQU
1,2,4-Trichlorobenzene	0.00272 XQU	0.00281 XQU	0.00283 XQU	0.00312 XQU	0.0031 XQU	0.00292 XQU
1,2-Dibromo-3-chloropropane	0.00544 U	0.00561 U	0.00566 U	0.00625 U	0.0062 U	0.00585 U
1,2-Dibromoethane	0.00272 U	0.00281 U	0.00283 U	0.00312 U	0.0031 U	0.00292 U
1,2-Dichlorobenzene	0.00272 U	0.00281 U	0.00283 U	0.00312 U	0.0031 U	0.00292 U
1,2-Dichloroethane	0.00272 U	0.00281 U	0.00283 U	0.00312 U	0.0031 U	0.00292 U
1,2-Dichloropropane	0.00272 U	0.00281 U	0.00283 U	0.00312 U	0.0031 U	0.00292 U
1,3-Dichlorobenzene	0.00272 U	0.00281 U	0.00283 U	0.00312 U	0.0031 U	0.00292 U
1,4-Dichlorobenzene	0.00272 U	0.00281 U	0.00283 U	0.00312 U	0.0031 U	0.00292 U
1,4-Dioxane	0.109 U	0.112 U	0.113 U	0.125 U	0.124 U	0.117 U
2-Butanone	0.00544 U	0.00561 U	0.00566 U	0.00625 U	0.0062 U	0.00585 U
2-Hexanone	0.00544 U	0.00561 U	0.00566 U	0.00625 U	0.0062 U	0.00585 U
4-Methyl-2-pentanone	0.00544 U	0.00561 U	0.00566 U	0.00625 U	0.0062 U	0.00585 U
Acetone	0.0105 J	0.00971 J	0.00852 J	0.00952 J	0.0117 J	0.0114 J
Benzene	0.00272 U	0.00281 U	0.00283 U	0.00312 U	0.0031 U	0.00292 U
Bromochloromethane	0.00272 U	0.00281 U	0.00283 U	0.00312 U	0.0031 U	0.00292 U
Bromodichloromethane	0.00272 U	0.00281 U	0.00283 U	0.00312 U	0.0031 U	0.00292 U
Bromoform	0.00272 U	0.00281 U	0.00283 U	0.00312 U	0.0031 U	0.00292 U
Bromomethane	0.00544 U	0.00561 U	0.00566 U	0.00625 U	0.0062 U	0.00585 U
Carbon disulfide	0.00272 U	0.00281 U	0.00283 U	0.00312 U	0.0031 U	0.00292 U
Carbon tetrachloride	0.00272 U	0.00281 U	0.00283 U	0.00312 U	0.0031 U	0.00292 U
Chlorobenzene	0.00272 U	0.00281 U	0.00283 U	0.00312 U	0.0031 U	0.00292 U
Chloroethane	0.00544 U	0.00561 U	0.00566 U	0.00625 U	0.0062 U	0.00585 U
Chloroform	0.00272 U	0.00281 U	0.00283 U	0.00312 U	0.0031 U	0.00292 U
Chloromethane	0.00544 U	0.00561 U	0.00566 U	0.00625 U	0.0062 U	0.00585 U
cis-1,2-Dichloroethene	0.00272 U	0.00281 U	0.00283 U	0.00312 U	0.0031 U	0.00292 U
cis-1,3-Dichloropropene	0.00272 U	0.00281 U	0.00283 U	0.00312 U	0.0031 U	0.00292 U
Cyclohexane	0.00272 U	0.00281 U	0.00283 U	0.00312 U	0.0031 U	0.00292 U
Dibromochloromethane	0.00272 U	0.00281 U	0.00283 U	0.00312 U	0.0031 U	0.00292 U
Dichlorodifluoromethane (Freon-12)	0.00544 U	0.00561 U	0.00566 U	0.00625 U	0.0062 U	0.00585 U
Ethylbenzene	0.00272 U	0.00281 U	0.00283 U	0.00312 U	0.0031 U	0.00292 U
Isopropylbenzene	0.00272 U	0.00281 U	0.00283 U	0.00312 U	0.0031 U	0.00292 U
m- and p-Xylene	0.00544 U	0.00561 U	0.00566 U	0.00625 U	0.0062 U	0.00585 U
Methyl Acetate	0.00544 U	0.00561 U	0.00566 U	0.00625 U	0.0062 U	0.00585 U
Methylcyclohexane	0.00272 U	0.00281 U	0.00283 U	0.00312 U	0.0031 U	0.00292 U
Methylene chloride	0.00544 U	0.00561 U	0.00566 U	0.00625 U	0.0062 U	0.00585 U
Methyl-tert-Butyl Ether (MTBE)	0.00272 U	0.00281 U	0.00283 U	0.00312 U	0.0031 U	0.00292 U
o-Xylene	0.00272 U	0.00281 U	0.00283 U	0.00312 U	0.0031 U	0.00292 U
Styrene	0.00272 U	0.00281 U	0.00283 U	0.00312 U	0.0031 U	0.00292 U
Tetrachloroethene	0.00272 U	0.00281 U	0.00283 U	0.00312 U	0.0031 U	0.00292 U
Toluene	0.00272 U	0.00281 U	0.00283 U	0.00312 U	0.0031 U	0.00292 U
trans-1,2-Dichloroethene	0.00272 U	0.00281 U	0.00283 U	0.00312 U	0.0031 U	0.00292 U
trans-1,3-Dichloropropene	0.00272 U	0.00281 U	0.00283 U	0.00312 U	0.0031 U	0.00292 U
Trichloroethene	0.00272 U	0.00281 U	0.00283 U	0.00312 U	0.0031 U	0.00292 U
Trichlorofluoromethane (Freon-11)	0.00544 U	0.00561 U	0.00566 U	0.00625 U	0.0062 U	0.00585 U
Vinyl chloride	0.00272 U	0.00281 U	0.00283 U	0.00312 U	0.0031 U	0.00292 U
Xylene, Total	0.00815 U	0.00842 U	0.00849 U	0.00937 U	0.0093 U	0.00877 U
Semivolatile Organic Compounds (MG/KG)						
Benzo(a)anthracene	0.0022 J	0.00411 U	0.00419 U	0.00414 U	0.00413 U	0.00407 U
Benzo(a)pyrene	0.004 U	0.00411 U	0.00419 U	0.00414 U	0.00413 U	0.00407 U
Benzo(b)fluoranthene	0.004 U	0.00411 U	0.00419 U	0.00414 U	0.00413 U	0.00407 U
Dibenz(a,h)anthracene	0.004 U	0.00411 U	0.00419 U	0.00414 U	0.00413 U	0.00407 U
Indeno(1,2,3-cd)pyrene	0.004 U	0.00411 U	0.00419 U	0.00414 U	0.00413 U	0.00407 U
Naphthalene	0.004 U	0.00411 U	0.00419 U	0.00414 U	0.00413 U	0.00407 U
Pesticide/Polychlorinated Biphenyls (MG/KG)						
Aroclor-1254	0.0101 U	0.0104 U	0.0101 U	0.00995 U	0.0102 U	0.0102 U
Aroclor-1260	0.0101 U	0.0104 U	0.0101 U	0.00995 U	0.0102 U	0.0102 U
Explosives (MG/KG)						
1,3,5-Trinitrobenzene	0.0388 U	0.04 U	0.0381 U	0.0377 U	0.037 U	0.0377 U
1,3-Dinitrobenzene	0.0388 U	0.04 U	0.0381 U	0.0377 U	0.037 U	0.0377 U
2,4,6-Trinitrotoluene	0.0388 U	0.04 U	0.0381 U	0.0377 U	0.037 U	0.0377 U
2,4-Dinitrotoluene	0.0388 U	0.04 U	0.0381 U	0.0377 U	0.037 U	0.0377 U
2,6-Dinitrotoluene	0.0388 U	0.04 U	0.0381 U	0.0377 U	0.037 U	0.0377 U
2-Amino-4,6-dinitrotoluene	0.0388 QU	0.04 QU	0.0381 QU	0.0377 QU	0.037 QU	0.0377 QU
2-Nitrotoluene	0.0388 U	0.04 U	0.0381 U	0.0377 U	0.037 U	0.0377 U
3,5-Dinitroaniline	0.0388 U	0.04 U	0.0381 U	0.0377 U	0.037 U	0.0377 U
3-Nitrotoluene	0.0388 U	0.04 U	0.0381 U	0.0377 U	0.037 U	0.0377 U
4-Amino-2,6-dinitrotoluene	0.0388 QU	0.04 QU	0.0381 QU	0.0377 QU	0.037 QU	0.0377 QU
4-Nitrotoluene	0.0388 U	0.04 U	0.0381 U	0.0377 U	0.037 U	0.0377 U
HMX	0.0388 U	0.04 U	0.0381 U	0.0377 U	0.037 U	0.0377 U
Nitrobenzene	0.0388 QU	0.04 QU	0.0381 QU	0.0377 QU	0.037 QU	0.0377 QU
Nitroglycerin	0.0971 U	0.1 U	0.0952 U	0.0943 U	0.0926 U	0.0943 U
Perchlorate	0.00246 U	0.00246 U	0.00242 U	0.00246 U	0.00244 U	0.0025 U
PETN	0.0971 U	0.1 U	0.0952 U	0.0943 U	0.0926 U	0.0943 U
RDX	0.0388 U	0.04 U	0.0381 U	0.0377 U	0.037 U	0.0377 U
Tetryl	0.0388 U	0.04 U	0.0381 U	0.0377 U	0.037 U	0.0377 U
Total Metals (MG/KG)						
Antimony	0.494 MNU	0.517 MNU	0.502 MNU	0.632 MNU	0.571 MNU	0.572 MNU
Arsenic	3.55	4	3.66	3.63	4.3	4.26
Cadmium	0.124 U	0.129 U	0.126 U	0.126 U	0.127 U	0.127 U
Cobalt	4.12	4.11	3.96	4.28	4.24	4.15
Copper	9.79	13.8	10	10.2	9.61	9.96
Iron	10,200	10,200	9,430	10,100	10,500	10,500
Lead	5.5	5.79	5.21	5.73	5.45	6.14
Manganese	81.8 N	82.7 N	91.3 N	91.9 N	86 N	89 N
Mercury	0.0246 J	0.0302 J	0.022 J	0.0221 J	0.0201 J	0.0429 J
Silver	0.124 MU	0.129 U	0.126 MU	0.126 MU	0.127 MU	0.127 MU
Vanadium	25.9	25.1	24.8	25.3	25	26.2
Zinc	24.5 N	26.3 N	23.7 N	26.4 N	25 N	24.6 N

Notes:

E - Concentration exceeds calibration range

J - Analyte present. Value may or may not be accurate or precise

MG/KG - Milligram per kilogram

M - Sample matrix interfered with the quantitation of the analyte; DL/LOD/LOQ have been raised.

N - MS/MSD accuracy and/or precision are outside acceptance limits

NS - Not sampled

Q - LCS/LCSD accuracy and/or precision are outside acceptance limits

U - The material was analyzed for, but not detected

X - Potential positive bias due to an ICV or CCV exceedance

Y - Potential negative bias due to an ICV or CCV exceedance

TABLE B-12

Remedial Action Confirmation Sampling Raw Analytical Data - 2nd Street Disposal Area

TRDA Remedial Investigation Report

Harvey Point Defense Testing Activity

Hertford, North Carolina

Sample ID	TR-2ND-CSF10D-1015	TR-2ND-CSF11-1015	TR-2ND-CSF12-1015	TR-2ND-CSW01-1015	TR-2ND-CSW02-1015	TR-2ND-CSW02D-1015
Sample Date	10/23/15	10/23/15	10/23/15	10/23/15	10/23/15	10/23/15
Chemical Name						
Volatile Organic Compounds (MG/KG)						
1,1,1-Trichloroethane	0.00309 U	0.00287 U	0.00281 U	0.00259 U	0.00268 U	0.00275 U
1,1,2,2-Tetrachloroethane	0.00309 U	0.00287 U	0.00281 U	0.00259 U	0.00268 XQU	0.00275 XQU
1,1,2-Trichloro-1,2,2-trifluoroethane (Freon-113)	0.00618 U	0.00575 U	0.00563 U	0.00517 U	0.00537 U	0.00551 U
1,1,2-Trichloroethane	0.00309 U	0.00287 U	0.00281 U	0.00259 U	0.00268 U	0.00275 U
1,1-Dichloroethane	0.00309 U	0.00287 U	0.00281 U	0.00259 U	0.00268 U	0.00275 U
1,1-Dichloroethene	0.00309 U	0.00287 U	0.00281 U	0.00259 U	0.00268 U	0.00275 U
1,2,3-Trichlorobenzene	0.00309 XQU	0.00287 XQU	0.00281 XQU	0.00259 XQU	0.00268 U	0.00275 U
1,2,4-Trichlorobenzene	0.00309 XQU	0.00287 XQU	0.00281 XQU	0.00259 XQU	0.00268 U	0.00275 U
1,2-Dibromo-3-chloropropane	0.00618 U	0.00575 U	0.00563 U	0.00517 U	0.00537 U	0.00551 U
1,2-Dibromoethane	0.00309 U	0.00287 U	0.00281 U	0.00259 U	0.00268 U	0.00275 U
1,2-Dichlorobenzene	0.00309 U	0.00287 U	0.00281 U	0.00259 U	0.00268 U	0.00275 U
1,2-Dichloroethane	0.00309 U	0.00287 U	0.00281 U	0.00259 U	0.00268 U	0.00275 U
1,2-Dichloropropane	0.00309 U	0.00287 U	0.00281 U	0.00259 U	0.00268 U	0.00275 U
1,3-Dichlorobenzene	0.00309 U	0.00287 U	0.00281 U	0.00259 U	0.00268 XU	0.00275 XU
1,4-Dichlorobenzene	0.00309 U	0.00287 U	0.00281 U	0.00259 U	0.00268 U	0.00275 U
1,4-Dioxane	0.124 U	0.115 U	0.113 U	0.103 U	0.107 QU	0.11 QU
2-Butanone	0.00618 U	0.00575 U	0.00563 U	0.00517 U	0.00537 U	0.00551 U
2-Hexanone	0.00618 U	0.00575 U	0.00563 U	0.00517 U	0.00537 U	0.00551 U
4-Methyl-2-pentanone	0.00618 U	0.00575 U	0.00563 U	0.00517 U	0.00537 U	0.00551 U
Acetone	0.00962 J	0.00924 J	0.00819 J	0.00886 J	0.00829 YJ	0.0107 YJ
Benzene	0.00309 U	0.00287 U	0.00281 U	0.00259 U	0.00268 QU	0.00275 QU
Bromochloromethane	0.00309 U	0.00287 U	0.00281 U	0.00259 U	0.00268 U	0.00275 U
Bromodichloromethane	0.00309 U	0.00287 U	0.00281 U	0.00259 U	0.00268 U	0.00275 U
Bromoform	0.00309 U	0.00287 U	0.00281 U	0.00259 U	0.00268 U	0.00275 U
Bromomethane	0.00618 U	0.00575 U	0.00563 U	0.00517 U	0.00537 U	0.00551 U
Carbon disulfide	0.00309 U	0.00287 U	0.00281 U	0.00259 U	0.00268 U	0.00275 U
Carbon tetrachloride	0.00309 U	0.00287 U	0.00281 U	0.00259 U	0.00268 U	0.00275 U
Chlorobenzene	0.00309 U	0.00287 U	0.00281 U	0.00259 U	0.00268 U	0.00275 U
Chloroethane	0.00618 U	0.00575 U	0.00563 U	0.00517 U	0.00537 U	0.00551 U
Chloroform	0.00309 U	0.00287 U	0.00281 U	0.00259 U	0.00268 U	0.00275 U
Chloromethane	0.00618 U	0.00575 U	0.00563 U	0.00517 U	0.00537 U	0.00551 U
cis-1,2-Dichloroethene	0.00309 U	0.00287 U	0.00281 U	0.00259 U	0.00268 U	0.00275 U
cis-1,3-Dichloropropene	0.00309 U	0.00287 U	0.00281 U	0.00259 U	0.00268 QU	0.00275 QU
Cyclohexane	0.00309 U	0.00287 U	0.00281 U	0.00259 U	0.00268 U	0.00275 U
Dibromochloromethane	0.00309 U	0.00287 U	0.00281 U	0.00259 U	0.00268 U	0.00275 U
Dichlorodifluoromethane (Freon-12)	0.00618 U	0.00575 U	0.00563 U	0.00517 U	0.00537 U	0.00551 U
Ethylbenzene	0.00309 U	0.00287 U	0.00281 U	0.00259 U	0.00268 U	0.00275 U
Isopropylbenzene	0.00309 U	0.00287 U	0.00281 U	0.00259 U	0.00268 U	0.00275 U
m- and p-Xylene	0.00618 U	0.00575 U	0.00563 U	0.00517 U	0.00537 U	0.00551 U
Methyl Acetate	0.00618 U	0.00575 U	0.00563 U	0.00517 U	0.00537 YU	0.00551 YU
Methylcyclohexane	0.00309 U	0.00287 U	0.00281 U	0.00259 U	0.00268 U	0.00275 U
Methylene chloride	0.00618 U	0.00575 U	0.00563 U	0.00517 U	0.00537 U	0.00551 U
Methyl-tert-Butyl Ether (MTBE)	0.00309 U	0.00287 U	0.00281 U	0.00259 U	0.00268 U	0.00275 U
o-Xylene	0.00309 U	0.00287 U	0.00281 U	0.00259 U	0.00268 U	0.00275 U
Styrene	0.00309 U	0.00287 U	0.00281 U	0.00259 U	0.00268 U	0.00275 U
Tetrachloroethene	0.00309 U	0.00287 U	0.00281 U	0.00259 U	0.00268 U	0.00275 U
Toluene	0.00309 U	0.00287 U	0.00281 U	0.00259 U	0.00268 U	0.00275 U
trans-1,2-Dichloroethene	0.00309 U	0.00287 U	0.00281 U	0.00259 U	0.00268 U	0.00275 U
trans-1,3-Dichloropropene	0.00309 U	0.00287 U	0.00281 U	0.00259 U	0.00268 U	0.00275 U
Trichloroethene	0.00309 U	0.00287 U	0.00281 U	0.00259 U	0.00268 U	0.00275 U
Trichlorofluoromethane (Freon-11)	0.00618 U	0.00575 U	0.00563 U	0.00517 U	0.00537 U	0.00551 U
Vinyl chloride	0.00309 U	0.00287 U	0.00281 U	0.00259 U	0.00268 U	0.00275 U
Xylene, Total	0.00927 U	0.00862 U	0.00844 U	0.00776 U	0.00805 U	0.00826 U
Semivolatile Organic Compounds (MG/KG)						
Benzo(a)anthracene	0.00414 U	0.00406 U	0.00406 U	0.00407 U	0.00236 J	0.00411 U
Benzo(a)pyrene	0.00414 U	0.00406 U	0.00406 U	0.00407 U	0.00408 U	0.00411 U
Benzo(b)fluoranthene	0.00414 U	0.00406 U	0.00406 U	0.00407 U	0.00255 J	0.00411 U
Dibenz(a,h)anthracene	0.00414 U	0.00406 U	0.00406 U	0.00407 U	0.00408 U	0.00411 U
Indeno(1,2,3-cd)pyrene	0.00414 U	0.00406 U	0.00406 U	0.00407 U	0.00408 U	0.00411 U
Naphthalene	0.00414 U	0.00406 U	0.00406 U	0.00407 U	0.00408 U	0.00411 U
Pesticide/Polychlorinated Biphenyls (MG/KG)						
Aroclor-1254	0.0104 U	0.0105 U	0.00981 U	0.0101 U	0.00997 U	0.0101 U
Aroclor-1260	0.0104 U	0.0105 U	0.00981 U	0.0101 U	0.00997 U	0.0101 U
Explosives (MG/KG)						
1,3,5-Trinitrobenzene	0.0367 U	0.0377 U	0.0385 U	0.0374 U	0.037 U	0.0396 U
1,3-Dinitrobenzene	0.0367 U	0.0377 U	0.0385 U	0.0374 U	0.037 U	0.0396 U
2,4,6-Trinitrotoluene	0.0367 U	0.0377 U	0.0385 U	0.0374 U	0.037 U	0.0396 U
2,4-Dinitrotoluene	0.0367 U	0.0377 U	0.0385 U	0.0374 U	0.037 U	0.0396 U
2,6-Dinitrotoluene	0.0367 U	0.0377 U	0.0385 U	0.0374 U	0.037 U	0.0396 U
2-Amino-4,6-dinitrotoluene	0.0367 QU	0.0377 QU	0.0385 QU	0.0374 QU	0.037 QU	0.0396 QU
2-Nitrotoluene	0.0367 U	0.0377 U	0.0385 U	0.0374 U	0.037 U	0.0396 U
3,5-Dinitroaniline	0.0367 U	0.0377 U	0.0385 U	0.0374 U	0.037 U	0.0396 U
3-Nitrotoluene	0.0367 U	0.0377 U	0.0385 U	0.0374 U	0.037 U	0.0396 U
4-Amino-2,6-dinitrotoluene	0.0367 QU	0.0377 QU	0.0385 QU	0.0374 QU	0.037 QU	0.0396 QU
4-Nitrotoluene	0.0367 U	0.0377 U	0.0385 U	0.0374 U	0.037 U	0.0396 U
HMX	0.0367 U	0.0377 U	0.0385 U	0.0374 U	0.037 U	0.0396 U
Nitrobenzene	0.0367 QU	0.0377 QU	0.0385 QU	0.0374 QU	0.037 QU	0.0396 QU
Nitroglycerin	0.0917 U	0.0943 U	0.0962 U	0.0935 U	0.0926 U	0.099 U
Perchlorate	0.0025 U	0.00242 U	0.00238 U	0.0024 U	0.00248 U	0.00248 U
PETN	0.0917 U	0.0943 U	0.0962 U	0.0935 U	0.0926 U	0.099 U
RDX	0.0367 U	0.0377 U	0.0385 U	0.0374 U	0.037 U	0.0396 U
Tetryl	0.0367 U	0.0377 U	0.0385 U	0.0374 U	0.037 U	0.0396 U
Total Metals (MG/KG)						
Antimony	0.498 MNU	0.512 MNU	0.559 MNU	0.618 MNU	0.684 MNU	0.517 MNU
Arsenic	3.96	3.89	4.21	4.66	4.06	5.49
Cadmium	0.124 U	0.128 U	0.124 U	0.124 U	0.124 U	0.129 U
Cobalt	4.21	3.99	4.58	2.89	4.5	4.45
Copper	9.72	9.7	11	7.67	11.8	9.58
Iron	10,000	9,650	11,700	9,440	12,000	10,900
Lead	5.89	5.51	6.99	4.03 E	7.38	5.42
Manganese	81.8 N	80 N	87 N	79.2 N	89.2 N	81.5 N
Mercury	0.0371 J	0.029 J	0.0215 J	0.0314 U	0.0235 J	0.0211 J
Silver	0.124 U	0.128 MU	0.124 MU	0.124 MU	0.124 MU	0.129 MU
Vanadium	25.1	24.3	29.6	23.8	30	26.6
Zinc	25.6 N	24.3 N	33.1 N	17.5 EN	27.3 N	25.5 N

Notes:

E - Concentration exceeds calibration range

J - Analyte present. Value may or may not be accurate or precise

MG/KG - Milligram per kilogram

M - Sample matrix interfered with the quantitation of the analyte; DL/LOD/LOQ have been raised.

N - MS/MSD accuracy and/or precision are outside acceptance limits

NS - Not sampled

Q - LCS/LCSD accuracy and/or precision are outside acceptance limits

U - The material was analyzed for, but not detected

X - Potential positive bias due to an ICV or CCV exceedance

Y - Potential negative bias due to an ICV or CCV exceedance

TABLE B-12

Remedial Action Confirmation Sampling Raw Analytical Data - 2nd Street Disposal Area

TRDA Remedial Investigation Report

Harvey Point Defense Testing Activity

Hertford, North Carolina

Sample ID	TR-2ND-CSW03-1015	TR-2ND-CSW04-1015	TR-2ND-CSW05-1015	TR-2ND-CSW06-1015	TR-2ND-CSW07-1015
Sample Date	10/23/15	10/23/15	10/23/15	10/23/15	10/23/15
Chemical Name					
Volatile Organic Compounds (MG/KG)					
1,1,1-Trichloroethane	0.00269 U	0.00255 U	0.00279 U	0.00278 U	0.00279 U
1,1,2,2-Tetrachloroethane	0.00269 XQU	0.00255 XQU	0.00279 XQU	0.00278 XQU	0.00279 XQU
1,1,2-Trichloro-1,2,2-trifluoroethane (Freon-113)	0.00538 U	0.00509 U	0.00559 U	0.00556 U	0.00559 U
1,1,2-Trichloroethane	0.00269 U	0.00255 U	0.00279 U	0.00278 U	0.00279 U
1,1-Dichloroethane	0.00269 U	0.00255 U	0.00279 U	0.00278 U	0.00279 U
1,1-Dichloroethene	0.00269 U	0.00255 U	0.00279 U	0.00278 U	0.00279 U
1,2,3-Trichlorobenzene	0.00269 U	0.00255 U	0.00279 U	0.00278 U	0.00279 U
1,2,4-Trichlorobenzene	0.00269 U	0.00255 U	0.00279 U	0.00278 U	0.00279 U
1,2-Dibromo-3-chloropropane	0.00538 U	0.00509 U	0.00559 U	0.00556 U	0.00559 U
1,2-Dibromoethane	0.00269 U	0.00255 U	0.00279 U	0.00278 U	0.00279 U
1,2-Dichlorobenzene	0.00269 U	0.00255 U	0.00279 U	0.00278 U	0.00279 U
1,2-Dichloroethane	0.00269 U	0.00255 U	0.00279 U	0.00278 U	0.00279 U
1,2-Dichloropropane	0.00269 U	0.00255 U	0.00279 U	0.00278 U	0.00279 U
1,3-Dichlorobenzene	0.00269 XU	0.00255 XU	0.00279 XU	0.00278 XU	0.00279 XU
1,4-Dichlorobenzene	0.00269 U	0.00255 U	0.00279 U	0.00278 U	0.00279 U
1,4-Dioxane	0.108 QU	0.102 QU	0.112 QU	0.111 QU	0.112 QU
2-Butanone	0.00538 U	0.00509 U	0.00559 U	0.00556 U	0.00559 U
2-Hexanone	0.00538 U	0.00509 U	0.00559 U	0.00556 U	0.00559 U
4-Methyl-2-pentanone	0.00538 U	0.00509 U	0.00559 U	0.00556 U	0.00559 U
Acetone	0.00834 YJ	0.00946 YJ	0.0107 YJ	0.0114 YJ	0.00937 YJ
Benzene	0.00269 QU	0.00255 QU	0.00279 QU	0.00278 QU	0.00279 QU
Bromochloromethane	0.00269 U	0.00255 U	0.00279 U	0.00278 U	0.00279 U
Bromodichloromethane	0.00269 U	0.00255 U	0.00279 U	0.00278 U	0.00279 U
Bromoform	0.00269 U	0.00255 U	0.00279 U	0.00278 U	0.00279 U
Bromomethane	0.00538 U	0.00509 U	0.00559 U	0.00556 U	0.00559 U
Carbon disulfide	0.00269 U	0.00255 U	0.00279 U	0.00278 U	0.00279 U
Carbon tetrachloride	0.00269 U	0.00255 U	0.00279 U	0.00278 U	0.00279 U
Chlorobenzene	0.00269 U	0.00255 U	0.00279 U	0.00278 U	0.00279 U
Chloroethane	0.00538 U	0.00509 U	0.00559 U	0.00556 U	0.00559 U
Chloroform	0.00269 U	0.00255 U	0.00279 U	0.00278 U	0.00279 U
Chloromethane	0.00538 U	0.00509 U	0.00559 U	0.00556 U	0.00559 U
cis-1,2-Dichloroethene	0.00269 U	0.00255 U	0.00279 U	0.00278 U	0.00279 U
cis-1,3-Dichloropropene	0.00269 QU	0.00255 QU	0.00279 QU	0.00278 QU	0.00279 QU
Cyclohexane	0.00269 U	0.00255 U	0.00279 U	0.00278 U	0.00279 U
Dibromochloromethane	0.00269 U	0.00255 U	0.00279 U	0.00278 U	0.00279 U
Dichlorodifluoromethane (Freon-12)	0.00538 U	0.00509 U	0.00559 U	0.00556 U	0.00559 U
Ethylbenzene	0.00269 U	0.00255 U	0.00279 U	0.00278 U	0.00279 U
Isopropylbenzene	0.00269 U	0.00255 U	0.00279 U	0.00278 U	0.00279 U
m- and p-Xylene	0.00538 U	0.00509 U	0.00559 U	0.00556 U	0.00559 U
Methyl Acetate	0.00538 YU	0.00509 YU	0.00559 YU	0.00556 YU	0.00559 YU
Methylcyclohexane	0.00269 U	0.00255 U	0.00279 U	0.00278 U	0.00279 U
Methylene chloride	0.00538 U	0.00509 U	0.00559 U	0.00556 U	0.00559 U
Methyl-tert-Butyl Ether (MTBE)	0.00269 U	0.00255 U	0.00279 U	0.00278 U	0.00279 U
o-Xylene	0.00269 U	0.00255 U	0.00279 U	0.00278 U	0.00279 U
Styrene	0.00269 U	0.00255 U	0.00279 U	0.00278 U	0.00279 U
Tetrachloroethene	0.00269 U	0.00255 U	0.00279 U	0.00278 U	0.00279 U
Toluene	0.00269 U	0.00255 U	0.00279 U	0.00278 U	0.00279 U
trans-1,2-Dichloroethene	0.00269 U	0.00255 U	0.00279 U	0.00278 U	0.00279 U
trans-1,3-Dichloropropene	0.00269 U	0.00255 U	0.00279 U	0.00278 U	0.00279 U
Trichloroethene	0.00269 U	0.00255 U	0.00279 U	0.00278 U	0.00279 U
Trichlorofluoromethane (Freon-11)	0.00538 U	0.00509 U	0.00559 U	0.00556 U	0.00559 U
Vinyl chloride	0.00269 U	0.00255 U	0.00279 U	0.00278 U	0.00279 U
Xylene, Total	0.00806 U	0.00764 U	0.00838 U	0.00833 U	0.00838 U
Semivolatile Organic Compounds (MG/KG)					
Benzo(a)anthracene	0.00401 U	0.0026 J	0.00416 U	0.004 U	0.00396 U
Benzo(a)pyrene	0.00401 U	0.004 U	0.00416 U	0.004 U	0.00396 U
Benzo(b)fluoranthene	0.00401 U	0.00328 J	0.00416 U	0.004 U	0.00396 U
Dibenz(a,h)anthracene	0.00401 U	0.004 U	0.00416 U	0.004 U	0.00396 U
Indeno(1,2,3-cd)pyrene	0.00401 U	0.00237 J	0.00416 U	0.004 U	0.00396 U
Naphthalene	0.00401 U	0.004 U	0.00416 U	0.004 U	0.00396 U
Pesticide/Polychlorinated Biphenyls (MG/KG)					
Aroclor-1254	0.00981 U	0.0102 U	0.0101 U	0.0101 U	0.0102 U
Aroclor-1260	0.00981 U	0.0102 U	0.0101 U	0.0101 U	0.0102 U
Explosives (MG/KG)					
1,3,5-Trinitrobenzene	0.0385 U	0.04 U	0.0351 U	0.0377 U	0.0385 U
1,3-Dinitrobenzene	0.0385 U	0.04 U	0.0351 U	0.0377 U	0.0385 U
2,4,6-Trinitrotoluene	0.0385 U	0.04 U	0.0351 U	0.0377 U	0.0385 U
2,4-Dinitrotoluene	0.0385 U	0.04 U	0.0351 U	0.0377 U	0.0385 U
2,6-Dinitrotoluene	0.0385 U	0.04 U	0.0351 U	0.0377 U	0.0385 U
2-Amino-4,6-dinitrotoluene	0.0385 QU	0.04 QU	0.0351 QU	0.0377 QU	0.0385 QU
2-Nitrotoluene	0.0385 U	0.04 U	0.0351 U	0.0377 U	0.0385 U
3,5-Dinitroaniline	0.0385 U	0.04 U	0.0351 U	0.0377 U	0.0385 U
3-Nitrotoluene	0.0385 U	0.04 U	0.0351 U	0.0377 U	0.0385 U
4-Amino-2,6-dinitrotoluene	0.0385 QU	0.04 QU	0.0351 QU	0.0377 QU	0.0385 QU
4-Nitrotoluene	0.0385 U	0.04 U	0.0351 U	0.0377 U	0.0385 U
HMX	0.0385 U	0.04 U	0.0351 U	0.0377 U	0.0385 U
Nitrobenzene	0.0385 QU	0.04 QU	0.0351 QU	0.0377 QU	0.0385 QU
Nitroglycerin	0.0962 U	0.1 U	0.0877 U	0.0943 U	0.0962 U
Perchlorate	0.00244 U	0.0024 U	0.0024 U	0.00252 U	0.0024 U
PETN	0.0962 U	0.1 U	0.0877 U	0.0943 U	0.0962 U
RDX	0.0385 U	0.04 U	0.0351 U	0.0377 U	0.0385 U
Tetryl	0.0385 U	0.04 U	0.0351 U	0.0377 U	0.0385 U
Total Metals (MG/KG)					
Antimony	0.492 MNU	0.504 MNU	0.525 MNU	0.52 MNU	0.641 MNU
Arsenic	5	4.3	3.35	4.24	4.64
Cadmium	0.123 U	0.126 U	0.131 U	0.13 U	0.128 U
Cobalt	4.31	4.14	4.78	4.13	4.24
Copper	10.1	10.6	12	10.4	9.75
Iron	11,000	10,300	12,000	10,000	9,690
Lead	5.67	6.37	7.51	5.87	4.63
Manganese	81.8 N	81.5 N	107 N	92.6 N	90.3 N
Mercury	0.0231 J	0.0773	0.036 J	0.0374 J	0.0353 U
Silver	0.123 MU	0.126 MU	0.131 MU	0.13 MU	0.128 MU
Vanadium	27.2	25.7	29.6	25.5	23.6
Zinc	25.5 N	26.9 N	33.4 N	32.8 N	24 N

Notes:

E - Concentration exceeds calibration range

J - Analyte present. Value may or may not be accurate or precise

MG/KG - Milligram per kilogram

M - Sample matrix interfered with the quantitation of the analyte; DL/LOD/LOQ have been raised.

N - MS/MSD accuracy and/or precision are outside acceptance limits

NS - Not sampled

Q - LCS/LCSD accuracy and/or precision are outside acceptance limits

U - The material was analyzed for, but not detected

X - Potential positive bias due to an ICV or CCV exceedance

Y - Potential negative bias due to an ICV or CCV exceedance

TABLE B-12

Remedial Action Confirmation Sampling Raw Analytical Data - 2nd Street Disposal Area

TRDA Remedial Investigation Report

Harvey Point Defense Testing Activity

Hertford, North Carolina

Sample ID	TR-2ND-CSW08-1015	TR-2ND-CSW09-1015
Sample Date	10/23/15	10/23/15
Chemical Name		
Volatile Organic Compounds (MG/KG)		
1,1,1-Trichloroethane	0.00339 U	0.0028 U
1,1,2,2-Tetrachloroethane	0.00339 XQU	0.0028 XQU
1,1,2-Trichloro-1,2,2-trifluoroethane (Freon-113)	0.00679 U	0.00561 U
1,1,2-Trichloroethane	0.00339 U	0.0028 U
1,1-Dichloroethane	0.00339 U	0.0028 U
1,1-Dichloroethene	0.00339 U	0.0028 U
1,2,3-Trichlorobenzene	0.00339 U	0.0028 U
1,2,4-Trichlorobenzene	0.00339 U	0.0028 U
1,2-Dibromo-3-chloropropane	0.00679 U	0.00561 U
1,2-Dibromoethane	0.00339 U	0.0028 U
1,2-Dichlorobenzene	0.00339 U	0.0028 U
1,2-Dichloroethane	0.00339 U	0.0028 U
1,2-Dichloropropane	0.00339 U	0.0028 U
1,3-Dichlorobenzene	0.00339 XU	0.0028 XU
1,4-Dichlorobenzene	0.00339 U	0.0028 U
1,4-Dioxane	0.136 QU	0.112 QU
2-Butanone	0.00679 U	0.00561 U
2-Hexanone	0.00679 U	0.00561 U
4-Methyl-2-pentanone	0.00679 U	0.00561 U
Acetone	0.01 YJ	0.0101 YJ
Benzene	0.00339 QU	0.0028 QU
Bromochloromethane	0.00339 U	0.0028 U
Bromodichloromethane	0.00339 U	0.0028 U
Bromoform	0.00339 U	0.0028 U
Bromomethane	0.00679 U	0.00561 U
Carbon disulfide	0.00339 U	0.0028 U
Carbon tetrachloride	0.00339 U	0.0028 U
Chlorobenzene	0.00339 U	0.0028 U
Chloroethane	0.00679 U	0.00561 U
Chloroform	0.00339 U	0.0028 U
Chloromethane	0.00679 U	0.00561 U
cis-1,2-Dichloroethene	0.00339 U	0.0028 U
cis-1,3-Dichloropropene	0.00339 QU	0.0028 QU
Cyclohexane	0.00339 U	0.0028 U
Dibromochloromethane	0.00339 U	0.0028 U
Dichlorodifluoromethane (Freon-12)	0.00679 U	0.00561 U
Ethylbenzene	0.00339 U	0.0028 U
Isopropylbenzene	0.00339 U	0.0028 U
m- and p-Xylene	0.00679 U	0.00561 U
Methyl Acetate	0.00679 YU	0.00561 YU
Methylcyclohexane	0.00339 U	0.0028 U
Methylene chloride	0.00679 U	0.00561 U
Methyl-tert-Butyl Ether (MTBE)	0.00339 U	0.0028 U
o-Xylene	0.00339 U	0.0028 U
Styrene	0.00339 U	0.0028 U
Tetrachloroethene	0.00339 U	0.0028 U
Toluene	0.00339 U	0.0028 U
trans-1,2-Dichloroethene	0.00339 U	0.0028 U
trans-1,3-Dichloropropene	0.00339 U	0.0028 U
Trichloroethene	0.00339 U	0.0028 U
Trichlorofluoromethane (Freon-11)	0.00679 U	0.00561 U
Vinyl chloride	0.00339 U	0.0028 U
Xylene, Total	0.0102 U	0.00841 U
Semivolatile Organic Compounds (MG/KG)		
Benzo(a)anthracene	0.00432 U	0.00405 U
Benzo(a)pyrene	0.00432 U	0.00405 U
Benzo(b)fluoranthene	0.00432 U	0.00405 U
Dibenz(a,h)anthracene	0.00432 U	0.00405 U
Indeno(1,2,3-cd)pyrene	0.00432 U	0.00405 U
Naphthalene	0.00432 U	0.00405 U
Pesticide/Polychlorinated Biphenyls (MG/KG)		
Aroclor-1254	0.0105 U	0.0104 U
Aroclor-1260	0.0105 U	0.0104 U
Explosives (MG/KG)		
1,3,5-Trinitrobenzene	0.04 U	0.0388 U
1,3-Dinitrobenzene	0.04 U	0.0388 U
2,4,6-Trinitrotoluene	0.04 U	0.0388 U
2,4-Dinitrotoluene	0.04 U	0.0388 U
2,6-Dinitrotoluene	0.04 U	0.0388 U
2-Amino-4,6-dinitrotoluene	0.04 QU	0.0388 QU
2-Nitrotoluene	0.04 U	0.0388 U
3,5-Dinitroaniline	0.04 U	0.0388 U
3-Nitrotoluene	0.04 U	0.0388 U
4-Amino-2,6-dinitrotoluene	0.04 QU	0.0388 QU
4-Nitrotoluene	0.04 U	0.0388 U
HMX	0.04 U	0.0388 U
Nitrobenzene	0.04 QU	0.0388 QU
Nitroglycerin	0.1 U	0.0971 U
Perchlorate	0.00246 U	0.00246 U
PETN	0.1 U	0.0971 U
RDX	0.04 U	0.0388 U
Tetryl	0.04 U	0.0388 U
Total Metals (MG/KG)		
Antimony	0.593 MNU	0.583 MNU
Arsenic	4.37	4.38
Cadmium	0.132 U	0.13 U
Cobalt	4.24	4.06
Copper	9.58	10.1
Iron	9,700	9,740
Lead	4.95	4.98
Manganese	88.7 N	85.6 N
Mercury	0.0185 J	0.0182 J
Silver	0.132 MU	0.13 MU
Vanadium	23.4	23.4
Zinc	25 N	25.6 N

Notes:

E - Concentration exceeds calibration range

J - Analyte present. Value may or may not be accurate or precise

MG/KG - Milligram per kilogram

M - Sample matrix interfered with the quantitation of the analyte; DL/LOD/LOQ have been raised.

N - MS/MSD accuracy and/or precision are outside acceptance limits

NS - Not sampled

Q - LCS/LCSD accuracy and/or precision are outside acceptance limits

U - The material was analyzed for, but not detected

X - Potential positive bias due to an ICV or CCV exceedance

Y - Potential negative bias due to an ICV or CCV exceedance

TABLE B-13

Remedial Action Confirmation Sampling Raw Analytical Data - 5th Street Disposal Area

TRDA Remedial Investigation Report

Harvey Point Defense Testing Activity

Hertford, North Carolina

Sample ID	TR-5TH-CSF01-0814	TR-5TH-CSF02-0814	TR-5TH-CSF03-0814	TR-5TH-CSF04-0814	TR-5TH-CSF05-0814
Sample Date	8/1/2014	8/1/2014	8/1/2014	8/1/2014	8/1/2014
Chemical Name					
Volatile Organic Compounds (MG/KG)					
1,1,1-Trichloroethane	0.0011 U	0.0013 U	0.0011 UQ	0.001 U	0.0013 U
1,1,2,2-Tetrachloroethane	0.0011 U	0.0013 U	0.0011 UQ	0.001 U	0.0013 U
1,1,2-Trichloro-1,2,2-trifluoroethane (Freon-113)	0.0011 UQ	0.0013 UQ	0.0011 UQ	0.001 UQ	0.0013 UQ
1,1,2-Trichloroethane	0.0011 U	0.0013 U	0.0011 UQ	0.001 U	0.0013 U
1,1-Dichloroethane	0.0011 U	0.0013 U	0.0011 UQ	0.001 U	0.0013 U
1,1-Dichloroethene	0.0011 UQ	0.0013 UQ	0.0011 UQ	0.001 UQ	0.0013 UQ
1,2,3-Trichlorobenzene	0.0011 U	0.0013 U	0.0011 UQ	0.001 U	0.0013 U
1,2,4-Trichlorobenzene	0.0011 U	0.0013 U	0.0011 UQ	0.001 U	0.0013 U
1,2-Dibromo-3-chloropropane	0.0011 U	0.0013 U	0.0011 UQ	0.001 U	0.0013 U
1,2-Dibromoethane	0.0011 U	0.0013 U	0.0011 UQ	0.001 U	0.0013 U
1,2-Dichlorobenzene	0.0011 U	0.0013 U	0.0011 UQ	0.001 U	0.0013 U
1,2-Dichloroethane	0.0011 U	0.0013 U	0.0011 UQ	0.001 U	0.0013 U
1,2-Dichloropropane	0.0011 U	0.0013 U	0.0011 UQ	0.001 U	0.0013 U
1,3-Dichlorobenzene	0.0011 U	0.0013 U	0.0011 UQ	0.001 U	0.0013 U
1,4-Dichlorobenzene	0.0011 U	0.0013 U	0.0011 UQ	0.001 U	0.0013 U
1,4-Dioxane	0.053 UQ	0.063 UQ	0.054 UQ	0.051 UQ	0.064 UQ
2-Butanone	0.0027 U	0.0031 U	0.0027 UQ	0.0026 U	0.0032 U
2-Hexanone	0.0027 UQ	0.0031 UQ	0.0027 UQ	0.0026 UQ	0.0032 UQ
4-Methyl-2-pentanone	0.0027 U	0.0031 U	0.0027 UQ	0.0026 U	0.0032 U
Acetone	0.014 JBQ	0.016 UQ	0.023 JBQ	0.0019 JBQ	0.0054 JBQ
Benzene	0.0011 U	0.0013 U	0.0011 UQ	0.001 U	0.0013 U
Bromochloromethane	0.0011 U	0.0013 U	0.0011 UQ	0.001 U	0.0013 U
Bromodichloromethane	0.0011 UQ	0.0013 UQ	0.0011 UQ	0.001 UQ	0.0013 UQ
Bromoform	0.0011 U	0.0013 U	0.0011 UQ	0.001 U	0.0013 U
Bromomethane	0.0053 U	0.0063 U	0.0054 UQ	0.0051 U	0.0064 U
Carbon disulfide	0.0053 U	0.0063 U	0.0054 UQ	0.0051 U	0.0064 U
Carbon tetrachloride	0.0011 U	0.0013 U	0.0011 UQ	0.001 U	0.0013 U
Chlorobenzene	0.0011 U	0.0013 U	0.0011 UQ	0.001 U	0.0013 U
Chloroethane	0.0011 U	0.0013 U	0.0011 UQ	0.001 U	0.0013 U
Chloroform	0.0011 U	0.0013 U	0.0011 UQ	0.001 U	0.0013 U
Chloromethane	0.0011 UQ	0.0013 UQ	0.0011 UQ	0.001 UQ	0.0013 UQ
cis-1,2-Dichloroethene	0.0011 U	0.0013 U	0.0011 UQ	0.001 U	0.0013 U
cis-1,3-Dichloropropene	0.0011 U	0.0013 U	0.0011 UQ	0.001 U	0.0013 U
Cyclohexane	0.0011 UQ	0.0013 UQ	0.0011 UQ	0.001 UQ	0.0013 UQ
Dibromochloromethane	0.0011 U	0.0013 U	0.0011 UQ	0.001 U	0.0013 U
Dichlorodifluoromethane (Freon-12)	0.0011 U	0.0013 U	0.0011 UQ	0.001 U	0.0013 U
Ethylbenzene	0.0011 U	0.0013 U	0.0011 UQ	0.001 U	0.0013 U
Isopropylbenzene	0.0011 U	0.0013 U	0.0011 UQ	0.001 U	0.0013 U
m- and p-Xylene	0.0021 U	0.0025 U	0.0021 UQ	0.002 U	0.0026 U
Methyl acetate	0.0053 UQ	0.0063 UQ	0.0054 UQ	0.0051 UQ	0.0064 UQ
Methylcyclohexane	0.0011 U	0.0013 U	0.0011 UQ	0.001 U	0.0013 U
Methylene chloride	0.0011 JBQ	0.0063 UQ	0.0008 J	0.0051 UQ	0.0064 UQ
Methyl-tert-butyl ether (MTBE)	0.0011 U	0.0013 U	0.0011 UQ	0.001 U	0.0013 U
o-Xylene	0.0011 U	0.0013 U	0.0011 UQ	0.001 U	0.0013 U
Styrene	0.0011 U	0.0013 U	0.0011 UQ	0.001 U	0.0013 U
Tetrachloroethene	0.0011 U	0.0013 U	0.0011 UQ	0.001 U	0.0013 U
Toluene	0.0011 U	0.0013 U	0.0011 UQ	0.001 U	0.0013 U
trans-1,2-Dichloroethene	0.0011 U	0.0013 U	0.0011 UQ	0.001 U	0.0013 U
trans-1,3-Dichloropropene	0.0011 U	0.0013 U	0.0011 UQ	0.001 U	0.0013 U
Trichloroethene	0.0011 U	0.0013 U	0.0011 UQ	0.001 U	0.0013 U
Trichlorofluoromethane (Freon-11)	0.0011 U	0.0013 U	0.0011 UQ	0.001 U	0.0013 U
Vinyl chloride	0.0011 UQ	0.0013 UQ	0.0011 UQ	0.001 UQ	0.0013 UQ
Xylene, total	0.0021 U	0.0025 U	0.0021 UQ	0.002 U	0.0026 U
Semivolatile Organic Compounds (MG/KG)					
Benzo(a)pyrene	0.029 U	0.027 U	0.029 U	0.034 U	0.027 U
Polychlorinated Biphenyls (MG/KG)					
Aroclor-1254	0.021 U	0.02 U	0.03 JPQ	0.025 UQ	0.017 JPQ
Aroclor-1260	0.012 J	0.014 J	0.13	0.035 J	0.047
Total Metals (MG/KG)					
Antimony	2.83 U	2.01 U	2.14 U	3.23 U	2.7 U
Arsenic	1.41 U	0.571 J	1.12 J	2.69 J	0.721 J
Cobalt	0.353 U	0.0935 J	0.738	2.62	0.289 J
Iron	425	517	1,650	5,850	1,760
Lead	1.62 J	2.16	2.16	10.7	22.3
Zinc	1.36 J	1.45	8.32	20.6	10

Notes:

B - Analyte also detected in an associated laboratory blank

J - Analyte present. Value may or may not be accurate or precise

P - Difference between the concentration on the two columns is greater than 25%; the lower of the two values is reported.

Q - One or more QC criteria outside acceptance limits

MG/KG - Milligram per kilogram

U - The material was analyzed for, but not detected

TABLE B-13

Remedial Action Confirmation Sampling Raw Analytical Data - 5th S

TRDA Remedial Investigation Report

Harvey Point Defense Testing Activity

Hertford, North Carolina

Sample ID	TR-5TH-CSF05D-0814	TR-5TH-CSF06-0814	TR-5TH-CSF07-0814	TR-5TH-CSF08-0814	TR-5TH-CSF09-0814	TR-5TH-CSW01-0814
Sample Date	8/1/2014	8/1/2014	8/1/2014	8/1/2014	8/1/2014	8/1/2014
Chemical Name						
Volatile Organic Compounds (MG/KG)						
1,1,1-Trichloroethane	0.0012 U	0.0011 U	0.001 U	0.0012 U	0.0013 U	0.001 U
1,1,2,2-Tetrachloroethane	0.0012 U	0.0011 UQ	0.001 UQ	0.0012 UQ	0.0013 U	0.001 U
1,1,2-Trichloro-1,2,2-trifluoroethane (Freon-113)	0.0012 UQ	0.0011 UQ	0.001 UQ	0.0012 UQ	0.0013 UQ	0.001 UQ
1,1,2-Trichloroethane	0.0012 U	0.0011 U	0.001 U	0.0012 U	0.0013 U	0.001 U
1,1-Dichloroethane	0.0012 U	0.0011 U	0.001 U	0.0012 U	0.0013 U	0.001 U
1,1-Dichloroethene	0.0012 UQ	0.0011 U	0.001 U	0.0012 U	0.0013 UQ	0.001 U
1,2,3-Trichlorobenzene	0.0012 U	0.0011 U	0.001 U	0.0012 U	0.0013 UQ	0.001 U
1,2,4-Trichlorobenzene	0.0012 U	0.0011 U	0.001 U	0.0012 U	0.0013 UQ	0.001 U
1,2-Dibromo-3-chloropropane	0.0012 U	0.0011 U	0.001 U	0.0012 U	0.0013 U	0.001 U
1,2-Dibromoethane	0.0012 U	0.0011 U	0.001 U	0.0012 U	0.0013 U	0.001 U
1,2-Dichlorobenzene	0.0012 U	0.0011 U	0.001 U	0.0012 U	0.0013 UQ	0.001 U
1,2-Dichloroethane	0.0012 U	0.0011 U	0.001 U	0.0012 U	0.0013 U	0.001 U
1,2-Dichloropropane	0.0012 U	0.0011 U	0.001 U	0.0012 U	0.0013 U	0.001 U
1,3-Dichlorobenzene	0.0012 U	0.0011 U	0.001 U	0.0012 U	0.0013 UQ	0.001 U
1,4-Dichlorobenzene	0.0012 U	0.0011 U	0.001 U	0.0012 U	0.0013 UQ	0.001 U
1,4-Dioxane	0.06 UQ	0.053 UQ	0.051 UQ	0.06 UQ	0.063 UQ	0.052 UQ
2-Butanone	0.003 U	0.0026 U	0.0025 U	0.003 U	0.0031 UQ	0.0026 U
2-Hexanone	0.003 UQ	0.0026 U	0.0025 U	0.003 U	0.0031 UQ	0.0026 U
4-Methyl-2-pentanone	0.003 U	0.0026 U	0.0025 U	0.003 U	0.0031 UQ	0.0026 U
Acetone	0.013 JBQ	0.0032 JQ	0.0028 JQ	0.0071 JQ	0.024 JBQ	0.022 JBQ
Benzene	0.0012 U	0.0011 U	0.001 U	0.0012 U	0.0013 UQ	0.001 U
Bromochloromethane	0.0012 U	0.0011 U	0.001 U	0.0012 U	0.0013 U	0.001 U
Bromodichloromethane	0.0012 UQ	0.0011 U	0.001 U	0.0012 U	0.0013 UQ	0.001 U
Bromoform	0.0012 U	0.0011 UQ	0.001 UQ	0.0012 UQ	0.0013 U	0.001 U
Bromomethane	0.006 U	0.0053 U	0.0051 U	0.006 U	0.0063 U	0.0052 U
Carbon disulfide	0.006 U	0.0053 UQ	0.0051 UQ	0.006 UQ	0.0063 U	0.0052 U
Carbon tetrachloride	0.0012 U	0.0011 U	0.001 U	0.0012 U	0.0013 U	0.001 U
Chlorobenzene	0.0012 U	0.0011 U	0.001 U	0.0012 U	0.0013 UQ	0.001 U
Chloroethane	0.0012 U	0.0011 U	0.001 U	0.0012 U	0.0013 U	0.001 U
Chloroform	0.0012 U	0.0011 U	0.001 U	0.0012 U	0.0013 U	0.001 U
Chloromethane	0.0012 UQ	0.0011 UQ	0.001 UQ	0.0012 UQ	0.0013 UQ	0.001 U
cis-1,2-Dichloroethene	0.0012 U	0.0011 U	0.001 U	0.0012 U	0.0013 U	0.001 U
cis-1,3-Dichloropropene	0.0012 U	0.0011 U	0.001 U	0.0012 U	0.0013 UQ	0.001 U
Cyclohexane	0.0012 UQ	0.0011 U	0.001 U	0.0012 U	0.0013 UQ	0.001 U
Dibromochloromethane	0.0012 U	0.0011 U	0.001 U	0.0012 U	0.0013 U	0.001 U
Dichlorodifluoromethane (Freon-12)	0.0012 U	0.0011 U	0.001 U	0.0012 U	0.0013 U	0.001 U
Ethylbenzene	0.0012 U	0.0011 U	0.001 U	0.0012 U	0.0013 U	0.001 U
Isopropylbenzene	0.0012 U	0.0011 U	0.001 U	0.0012 U	0.0013 U	0.001 U
m- and p-Xylene	0.0024 U	0.0021 U	0.002 U	0.0024 U	0.0025 UQ	0.0021 U
Methyl acetate	0.006 UQ	0.0053 U	0.0051 U	0.006 U	0.0063 UQ	0.0052 U
Methylcyclohexane	0.0012 U	0.0011 U	0.001 U	0.0012 U	0.0013 UQ	0.001 U
Methylene chloride	0.006 UQ	0.0053 UQ	0.0009 JBQ	0.006 UQ	0.0014 JBQ	0.0007 J
Methyl-tert-butyl ether (MTBE)	0.0012 U	0.0011 U	0.001 U	0.0012 U	0.0013 U	0.001 U
o-Xylene	0.0012 U	0.0011 U	0.001 U	0.0012 U	0.0013 U	0.001 U
Styrene	0.0012 U	0.0011 U	0.001 U	0.0012 U	0.0013 UQ	0.001 U
Tetrachloroethene	0.0012 U	0.0011 U	0.001 U	0.0012 U	0.0013 U	0.001 U
Toluene	0.0012 U	0.0011 U	0.001 U	0.0012 U	0.0013 U	0.0008 J
trans-1,2-Dichloroethene	0.0012 U	0.0011 U	0.001 U	0.0012 U	0.0013 U	0.001 U
trans-1,3-Dichloropropene	0.0012 U	0.0011 UQ	0.001 UQ	0.0012 UQ	0.0013 U	0.001 U
Trichloroethene	0.0012 U	0.0011 U	0.001 U	0.0012 U	0.0013 UQ	0.001 U
Trichlorofluoromethane (Freon-11)	0.0012 U	0.0011 U	0.001 U	0.0012 U	0.0013 U	0.001 U
Vinyl chloride	0.0012 UQ	0.0011 UQ	0.001 UQ	0.0012 UQ	0.0013 UQ	0.001 UQ
Xylene, total	0.0024 U	0.0021 U	0.002 U	0.0024 U	0.0025 U	0.0021 U
Semivolatile Organic Compounds (MG/KG)						
Benzo(a)pyrene	0.027 U	0.028 U	0.027 U	0.027 U	0.027 U	0.033 U
Polychlorinated Biphenyls (MG/KG)						
Aroclor-1254	0.02 U	0.021 U	0.02 U	0.032 JPQ	0.02 U	0.024 U
Aroclor-1260	0.02 UQ	0.023 J	0.02 UQ	0.1	0.02 UQ	0.024 U
Total Metals (MG/KG)						
Antimony	2.39 U	3.09 U	2.03 U	2.57 U	2.72 U	3.4 U
Arsenic	1.06 J	1.48 J	0.486 J	0.673 J	1.36 U	4.84
Cobalt	1.04	1.08	0.145 J	0.329 J	0.129 J	3.57
Iron	2,570	2,920	657	1,050	689 Q	8,750
Lead	10.8	9.15	2.01 J	7.58	2.07 J	5.52
Zinc	15.9	20.2	1.68	6.97	1.68	20.6

Notes:

B - Analyte also detected in an associated laboratory blank

J - Analyte present. Value may or may not be accurate or precise

P - Difference between the concentration on the two columns is greater than 25%; the lower of the two values is reported.

Q - One or more QC criteria outside acceptance limits

MG/KG - Milligram per kilogram

U - The material was analyzed for, but not detected

TABLE B-13

Remedial Action Confirmation Sampling Raw Analytical Data - 5th S

TRDA Remedial Investigation Report

Harvey Point Defense Testing Activity

Hertford, North Carolina

Sample ID	TR-5TH-CSW02-0814	TR-5TH-CSW03-0814	TR-5TH-CSW04-0814	TR-5TH-CSW05-0814	TR-5TH-CSW06-0814
Sample Date	8/1/2014	8/1/2014	8/1/2014	8/1/2014	8/1/2014
Chemical Name					
Volatile Organic Compounds (MG/KG)					
1,1,1-Trichloroethane	0.0013 U	0.0013 U	0.0013 U	0.0012 U	0.0011 U
1,1,2,2-Tetrachloroethane	0.0013 U	0.0013 U	0.0013 U	0.0012 U	0.0011 U
1,1,2-Trichloro-1,2,2-trifluoroethane (Freon-113)	0.0013 UQ	0.0013 UQ	0.0013 UQ	0.0012 UQ	0.0011 UQ
1,1,2-Trichloroethane	0.0013 U	0.0013 U	0.0013 U	0.0012 U	0.0011 U
1,1-Dichloroethane	0.0013 U	0.0013 U	0.0013 U	0.0012 U	0.0011 U
1,1-Dichloroethene	0.0013 U	0.0013 U	0.0013 U	0.0012 U	0.0011 UQ
1,2,3-Trichlorobenzene	0.0013 U	0.0013 U	0.0013 U	0.0012 U	0.0011 U
1,2,4-Trichlorobenzene	0.0013 U	0.0013 U	0.0013 U	0.0012 U	0.0011 U
1,2-Dibromo-3-chloropropane	0.0013 U	0.0013 U	0.0013 U	0.0012 U	0.0011 U
1,2-Dibromoethane	0.0013 U	0.0013 U	0.0013 U	0.0012 U	0.0011 U
1,2-Dichlorobenzene	0.0013 U	0.0013 U	0.0013 U	0.0012 U	0.0011 U
1,2-Dichloroethane	0.0013 U	0.0013 U	0.0013 U	0.0012 U	0.0011 U
1,2-Dichloropropane	0.0013 U	0.0013 U	0.0013 U	0.0012 U	0.0011 U
1,3-Dichlorobenzene	0.0013 U	0.0013 U	0.0013 U	0.0012 U	0.0011 U
1,4-Dichlorobenzene	0.0013 U	0.0013 U	0.0013 U	0.0012 U	0.0011 U
1,4-Dioxane	0.064 UQ	0.064 UQ	0.065 UQ	0.058 UQ	0.053 UQ
2-Butanone	0.0032 U	0.0032 U	0.0033 U	0.0029 U	0.0026 U
2-Hexanone	0.0032 U	0.0032 U	0.0033 U	0.0029 U	0.0026 UQ
4-Methyl-2-pentanone	0.0032 U	0.0032 U	0.0033 U	0.0029 U	0.0026 U
Acetone	0.0027 JBQ	0.0097 JBQ	0.0041 JBQ	0.0035 JBQ	0.026 BQ
Benzene	0.0013 U	0.0013 U	0.0013 U	0.0012 U	0.0011 U
Bromochloromethane	0.0013 U	0.0013 U	0.0013 U	0.0012 U	0.0011 U
Bromodichloromethane	0.0013 U	0.0013 U	0.0013 U	0.0012 U	0.0011 UQ
Bromoform	0.0013 U	0.0013 U	0.0013 U	0.0012 U	0.0011 U
Bromomethane	0.0064 U	0.0064 U	0.0065 U	0.0058 U	0.0053 U
Carbon disulfide	0.0064 U	0.0064 U	0.0065 U	0.0058 U	0.0053 U
Carbon tetrachloride	0.0013 U	0.0013 U	0.0013 U	0.0012 U	0.0011 U
Chlorobenzene	0.0013 U	0.0013 U	0.0013 U	0.0012 U	0.0011 U
Chloroethane	0.0013 U	0.0013 U	0.0013 U	0.0012 U	0.0011 U
Chloroform	0.0013 U	0.0013 U	0.0013 U	0.0012 U	0.0011 U
Chloromethane	0.0013 U	0.0013 U	0.0013 U	0.0012 U	0.0011 UQ
cis-1,2-Dichloroethene	0.0013 U	0.0013 U	0.0013 U	0.0012 U	0.0011 U
cis-1,3-Dichloropropene	0.0013 U	0.0013 U	0.0013 U	0.0012 U	0.0011 U
Cyclohexane	0.0013 U	0.0013 U	0.0013 U	0.0012 U	0.0011 UQ
Dibromochloromethane	0.0013 U	0.0013 U	0.0013 U	0.0012 U	0.0011 U
Dichlorodifluoromethane (Freon-12)	0.0013 U	0.0013 U	0.0013 U	0.0012 U	0.0011 U
Ethylbenzene	0.0013 U	0.0013 U	0.0013 U	0.0012 U	0.0011 U
Isopropylbenzene	0.0013 U	0.0013 U	0.0013 U	0.0012 U	0.0011 U
m- and p-Xylene	0.0025 U	0.0026 U	0.0026 U	0.0023 U	0.0021 U
Methyl acetate	0.0064 U	0.0064 U	0.0065 U	0.0058 U	0.0053 UQ
Methylcyclohexane	0.0013 U	0.0013 U	0.0013 U	0.0012 U	0.0011 U
Methylene chloride	0.001 J	0.0064 U	0.0065 U	0.0058 U	0.0007 JBQ
Methyl-tert-butyl ether (MTBE)	0.0013 U	0.0013 U	0.0013 U	0.0012 U	0.0011 U
o-Xylene	0.0013 U	0.0013 U	0.0013 U	0.0012 U	0.0011 U
Styrene	0.0013 U	0.0013 U	0.0013 U	0.0012 U	0.0011 U
Tetrachloroethene	0.0013 U	0.0013 U	0.0013 U	0.0012 U	0.0011 U
Toluene	0.0013 U	0.0013 U	0.0013 U	0.0012 U	0.0011 U
trans-1,2-Dichloroethene	0.0013 U	0.0013 U	0.0013 U	0.0012 U	0.0011 U
trans-1,3-Dichloropropene	0.0013 U	0.0013 U	0.0013 U	0.0012 U	0.0011 U
Trichloroethene	0.0013 U	0.0013 U	0.0013 U	0.0012 U	0.0011 U
Trichlorofluoromethane (Freon-11)	0.0013 U	0.0013 U	0.0013 U	0.0012 U	0.0011 U
Vinyl chloride	0.0013 UQ	0.0013 UQ	0.0013 UQ	0.0012 UQ	0.0011 UQ
Xylene, total	0.0025 U	0.0026 U	0.0026 U	0.0023 U	0.0021 U
Semivolatile Organic Compounds (MG/KG)					
Benzo(a)pyrene	0.033 J	0.035 U	0.032 U	0.027 U	0.029 U
Polychlorinated Biphenyls (MG/KG)					
Aroclor-1254	0.047 JPQ	0.026 U	0.023 U	0.02 U	0.021 U
Aroclor-1260	0.25	0.026 U	0.023 U	0.012 J	0.024 J
Total Metals (MG/KG)					
Antimony	2.54 U	3.09 U	3.2 U	2.84 U	2.46 U
Arsenic	1.81 J	4.43	1.6 U	1.42 U	1.18 J
Cobalt	1.44	3.28	0.129 J	0.355 U	0.608 J
Iron	3,550	7,590	675	379	2,200
Lead	11.6	6.33	1.87 J	0.733 J	6.73
Zinc	27.4	21.4	1.83	0.85 J	12.5

Notes:

B - Analyte also detected in an associated laboratory blank

J - Analyte present. Value may or may not be accurate or precise

P - Difference between the concentration on the two columns is greater than 25%; the lower of the two values is reported.

Q - One or more QC criteria outside acceptance limits

MG/KG - Milligram per kilogram

U - The material was analyzed for, but not detected

TABLE B-13

Remedial Action Confirmation Sampling Raw Analytical Data - 5th S

TRDA Remedial Investigation Report

Harvey Point Defense Testing Activity

Hertford, North Carolina

Sample ID	TR-5TH-CSW07-0814	TR-5TH-CSW07D-0814	TR-5TH-CSW08-0814	TR-5TH-CSW09-0814	TR-5TH-CSW10-0814
Sample Date	8/1/2014	8/1/2014	8/1/2014	8/1/2014	8/1/2014
Chemical Name					
Volatile Organic Compounds (MG/KG)					
1,1,1-Trichloroethane	0.0011 U	0.0012 U	0.0011 U	0.0012 U	0.001 UQ
1,1,2,2-Tetrachloroethane	0.0011 U	0.0012 U	0.0011 U	0.0012 U	0.001 UQ
1,1,2-Trichloro-1,2,2-trifluoroethane (Freon-113)	0.0011 UQ	0.0012 UQ	0.0011 UQ	0.0012 UQ	0.001 UQ
1,1,2-Trichloroethane	0.0011 U	0.0012 U	0.0011 U	0.0012 U	0.001 U
1,1-Dichloroethane	0.0011 U	0.0012 U	0.0011 U	0.0012 U	0.001 UQ
1,1-Dichloroethene	0.0011 UQ	0.0012 UQ	0.0011 UQ	0.0012 UQ	0.001 UQ
1,2,3-Trichlorobenzene	0.0011 U	0.0012 U	0.0011 U	0.0012 U	0.001 UQ
1,2,4-Trichlorobenzene	0.0011 U	0.0012 U	0.0011 U	0.0012 U	0.001 UQ
1,2-Dibromo-3-chloropropane	0.0011 U	0.0012 U	0.0011 U	0.0012 U	0.001 U
1,2-Dibromoethane	0.0011 U	0.0012 U	0.0011 U	0.0012 U	0.001 UQ
1,2-Dichlorobenzene	0.0011 U	0.0012 U	0.0011 U	0.0012 U	0.001 UQ
1,2-Dichloroethane	0.0011 U	0.0012 U	0.0011 U	0.0012 U	0.001 U
1,2-Dichloropropane	0.0011 U	0.0012 U	0.0011 U	0.0012 U	0.001 UQ
1,3-Dichlorobenzene	0.0011 U	0.0012 U	0.0011 U	0.0012 U	0.001 UQ
1,4-Dichlorobenzene	0.0011 U	0.0012 U	0.0011 U	0.0012 U	0.001 UQ
1,4-Dioxane	0.055 UQ	0.059 UQ	0.057 UQ	0.059 UQ	0.052 UQ
2-Butanone	0.0028 U	0.003 U	0.0028 U	0.0029 U	0.0026 UQ
2-Hexanone	0.0028 UQ	0.003 UQ	0.0028 UQ	0.0029 UQ	0.0026 UQ
4-Methyl-2-pentanone	0.0028 U	0.003 U	0.0028 U	0.0029 U	0.0026 UQ
Acetone	0.014 UQ	0.0038 JBQ	0.0025 JBQ	0.015 UQ	0.0042 JQ
Benzene	0.0011 U	0.0012 U	0.0011 U	0.0012 U	0.001 UQ
Bromochloromethane	0.0011 U	0.0012 U	0.0011 U	0.0012 U	0.001 UQ
Bromodichloromethane	0.0011 UQ	0.0012 UQ	0.0011 UQ	0.0012 UQ	0.001 U
Bromoform	0.0011 U	0.0012 U	0.0011 U	0.0012 U	0.001 UQ
Bromomethane	0.0055 U	0.0059 U	0.0057 U	0.0059 U	0.0052 UQ
Carbon disulfide	0.0055 U	0.0059 U	0.0057 U	0.0059 U	0.0052 UQ
Carbon tetrachloride	0.0011 U	0.0012 U	0.0011 U	0.0012 U	0.001 UQ
Chlorobenzene	0.0011 U	0.0012 U	0.0011 U	0.0012 U	0.001 UQ
Chloroethane	0.0011 U	0.0012 U	0.0011 U	0.0012 U	0.001 U
Chloroform	0.0011 U	0.0012 U	0.0011 U	0.0012 U	0.001 U
Chloromethane	0.0011 UQ	0.0012 UQ	0.0011 UQ	0.0012 UQ	0.001 UQ
cis-1,2-Dichloroethene	0.0011 U	0.0012 U	0.0011 U	0.0012 U	0.001 UQ
cis-1,3-Dichloropropene	0.0011 U	0.0012 U	0.0011 U	0.0012 U	0.001 UQ
Cyclohexane	0.0011 UQ	0.0012 UQ	0.0011 UQ	0.0012 UQ	0.001 UQ
Dibromochloromethane	0.0011 U	0.0012 U	0.0011 U	0.0012 U	0.001 U
Dichlorodifluoromethane (Freon-12)	0.0011 U	0.0012 U	0.0011 U	0.0012 U	0.001 U
Ethylbenzene	0.0011 U	0.0012 U	0.0011 U	0.0012 U	0.001 UQ
Isopropylbenzene	0.0011 U	0.0012 U	0.0011 U	0.0012 U	0.001 UQ
m- and p-Xylene	0.0022 U	0.0024 U	0.0023 U	0.0024 U	0.0021 UQ
Methyl acetate	0.0055 UQ	0.0059 UQ	0.0057 UQ	0.0059 UQ	0.0052 UQ
Methylcyclohexane	0.0011 U	0.0012 U	0.0011 U	0.0012 U	0.001 UQ
Methylene chloride	0.0055 UQ	0.0009 JBQ	0.0008 JBQ	0.0059 UQ	0.0008 JBQ
Methyl-tert-butyl ether (MTBE)	0.0011 U	0.0012 U	0.0011 U	0.0012 U	0.001 U
o-Xylene	0.0011 U	0.0012 U	0.0011 U	0.0012 U	0.001 UQ
Styrene	0.0011 U	0.0012 U	0.0011 U	0.0012 U	0.001 UQ
Tetrachloroethene	0.0011 U	0.0012 U	0.0011 U	0.0012 U	0.001 U
Toluene	0.0011 U	0.0012 U	0.0011 U	0.0012 U	0.001 UQ
trans-1,2-Dichloroethene	0.0011 U	0.0012 U	0.0011 U	0.0012 U	0.001 UQ
trans-1,3-Dichloropropene	0.0011 U	0.0012 U	0.0011 U	0.0012 U	0.001 UQ
Trichloroethene	0.0011 U	0.0012 U	0.0011 U	0.0012 U	0.001 UQ
Trichlorofluoromethane (Freon-11)	0.0011 U	0.0012 U	0.0011 U	0.0012 U	0.001 U
Vinyl chloride	0.0011 UQ	0.0012 UQ	0.0011 UQ	0.0012 UQ	0.001 UQ
Xylene, total	0.0022 U	0.0024 U	0.0023 U	0.0024 U	0.0021 U
Semivolatile Organic Compounds (MG/KG)					
Benzo(a)pyrene	0.03 U	0.027 U	0.027 U	0.027 U	0.028 U
Polychlorinated Biphenyls (MG/KG)					
Aroclor-1254	0.022 U	0.02 U	0.02 U	0.02 UQ	0.019 JPQ
Aroclor-1260	0.014 J	0.02 U	0.011 J	0.02 J	0.025 JQ
Total Metals (MG/KG)					
Antimony	2.55 U	2.48 U	2.54 U	2.56 U	2.56 UQ
Arsenic	1.48 J	1.15 J	1.27 U	1.28 U	2.16 J
Cobalt	1.03	0.768	0.318 U	0.161 J	2.09
Iron	2,870	2,190	505	662	5,140 Q
Lead	9.36	8.47	2.03 J	3.44	15.7
Zinc	15.5	10.2	1.22 J	2.95	25.1

Notes:

B - Analyte also detected in an associated laboratory blank

J - Analyte present. Value may or may not be accurate or precise

P - Difference between the concentration on the two columns is greater than 25%; the lower of the two values is reported.

Q - One or more QC criteria outside acceptance limits

MG/KG - Milligram per kilogram

U - The material was analyzed for, but not detected

TABLE B-13

Remedial Action Confirmation Sampling Raw Analytical Data - 5th S

TRDA Remedial Investigation Report

Harvey Point Defense Testing Activity

Hertford, North Carolina

Sample ID	TR-5TH-CSW11-0814	TR-5TH-CSW11D-0814	TR-5TH-CSW12-0814	TR-5TH-CSW13-0814	TR-5TH-CSW14-0814	TR-5TH-CSW15-0814
Sample Date	8/1/2014	8/1/2014	8/1/2014	8/1/2014	8/1/2014	8/1/2014
Chemical Name						
Volatile Organic Compounds (MG/KG)						
1,1,1-Trichloroethane	0.001 U	0.001 U	0.001 U	0.001 U	0.0011 U	0.0013 U
1,1,2,2-Tetrachloroethane	0.001 U	0.001 U	0.001 U	0.001 U	0.0011 U	0.0013 U
1,1,2-Trichloro-1,2,2-trifluoroethane (Freon-113)	0.001 UQ	0.001 UQ	0.001 UQ	0.001 UQ	0.0011 UQ	0.0013 UQ
1,1,2-Trichloroethane	0.001 U	0.001 U	0.001 U	0.001 U	0.0011 U	0.0013 U
1,1-Dichloroethane	0.001 U	0.001 U	0.001 U	0.001 U	0.0011 U	0.0013 U
1,1-Dichloroethene	0.001 UQ	0.001 UQ	0.001 UQ	0.001 UQ	0.0011 UQ	0.0013 UQ
1,2,3-Trichlorobenzene	0.001 U	0.001 U	0.001 U	0.001 U	0.0011 U	0.0013 U
1,2,4-Trichlorobenzene	0.001 U	0.001 U	0.001 U	0.001 U	0.0011 U	0.0013 U
1,2-Dibromo-3-chloropropane	0.001 U	0.001 U	0.001 U	0.001 U	0.0011 U	0.0013 U
1,2-Dibromoethane	0.001 U	0.001 U	0.001 U	0.001 U	0.0011 U	0.0013 U
1,2-Dichlorobenzene	0.001 U	0.001 U	0.001 U	0.001 U	0.0011 U	0.0013 U
1,2-Dichloroethane	0.001 U	0.001 U	0.001 U	0.001 U	0.0011 U	0.0013 U
1,2-Dichloropropane	0.001 U	0.001 U	0.001 U	0.001 U	0.0011 U	0.0013 U
1,3-Dichlorobenzene	0.001 U	0.001 U	0.001 U	0.001 U	0.0011 U	0.0013 U
1,4-Dichlorobenzene	0.001 U	0.001 U	0.001 U	0.001 U	0.0011 U	0.0013 U
1,4-Dioxane	0.05 UQ	0.051 UQ	0.052 UQ	0.05 UQ	0.053 UQ	0.063 UQ
2-Butanone	0.0025 U	0.0025 U	0.0026 U	0.0025 U	0.0027 U	0.0032 U
2-Hexanone	0.0025 UQ	0.0025 UQ	0.0026 UQ	0.0025 UQ	0.0027 UQ	0.0032 UQ
4-Methyl-2-pentanone	0.0025 U	0.0025 U	0.0026 U	0.0025 U	0.0027 U	0.0032 U
Acetone	0.013 UQ	0.031 BQ	0.013 UQ	0.013 UQ	0.0067 JBQ	0.0066 JBQ
Benzene	0.001 U	0.001 U	0.001 U	0.001 U	0.0011 U	0.0013 U
Bromochloromethane	0.001 U	0.001 U	0.001 U	0.001 U	0.0011 U	0.0013 U
Bromodichloromethane	0.001 UQ	0.001 UQ	0.001 UQ	0.001 UQ	0.0011 UQ	0.0013 UQ
Bromoform	0.001 U	0.001 U	0.001 U	0.001 U	0.0011 U	0.0013 U
Bromomethane	0.005 U	0.0051 U	0.0052 U	0.005 U	0.0053 U	0.0063 U
Carbon disulfide	0.005 U	0.0051 U	0.0052 U	0.005 U	0.0053 U	0.0063 U
Carbon tetrachloride	0.001 U	0.001 U	0.001 U	0.001 U	0.0011 U	0.0013 U
Chlorobenzene	0.001 U	0.001 U	0.001 U	0.001 U	0.0011 U	0.0013 U
Chloroethane	0.001 U	0.001 U	0.001 U	0.001 U	0.0011 U	0.0013 U
Chloroform	0.001 U	0.001 U	0.001 U	0.001 U	0.0011 U	0.0013 U
Chloromethane	0.001 UQ	0.001 UQ	0.001 UQ	0.001 UQ	0.0011 UQ	0.0013 UQ
cis-1,2-Dichloroethene	0.001 U	0.001 U	0.001 U	0.001 U	0.0011 U	0.0013 U
cis-1,3-Dichloropropene	0.001 U	0.001 U	0.001 U	0.001 U	0.0011 U	0.0013 U
Cyclohexane	0.001 UQ	0.001 UQ	0.001 UQ	0.001 UQ	0.0011 UQ	0.0013 UQ
Dibromochloromethane	0.001 U	0.001 U	0.001 U	0.001 U	0.0011 U	0.0013 U
Dichlorodifluoromethane (Freon-12)	0.001 U	0.001 U	0.001 U	0.001 U	0.0011 U	0.0013 U
Ethylbenzene	0.001 U	0.001 U	0.001 U	0.001 U	0.0011 U	0.0013 U
Isopropylbenzene	0.001 U	0.001 U	0.001 U	0.001 U	0.0011 U	0.0013 U
m- and p-Xylene	0.002 U	0.002 U	0.0021 U	0.001 J	0.0021 U	0.0025 U
Methyl acetate	0.005 UQ	0.021 Q	0.0052 UQ	0.005 UQ	0.0053 UQ	0.0063 UQ
Methylcyclohexane	0.001 U	0.001 U	0.001 U	0.001 U	0.0011 U	0.0013 U
Methylene chloride	0.0007 JBQ	0.0009 JBQ	0.0052 UQ	0.005 UQ	0.0053 UQ	0.0063 UQ
Methyl-tert-butyl ether (MTBE)	0.001 U	0.001 U	0.001 U	0.001 U	0.0011 U	0.0013 U
o-Xylene	0.001 U	0.001 U	0.001 U	0.001 U	0.0011 U	0.0013 U
Styrene	0.001 U	0.001 U	0.001 U	0.001 U	0.0011 U	0.0013 U
Tetrachloroethene	0.001 U	0.001 U	0.001 U	0.001 U	0.0011 U	0.0013 U
Toluene	0.001 U	0.001 U	0.001 U	0.001 U	0.0011 U	0.0007 J
trans-1,2-Dichloroethene	0.001 U	0.001 U	0.001 U	0.001 U	0.0011 U	0.0013 U
trans-1,3-Dichloropropene	0.001 U	0.001 U	0.001 U	0.001 U	0.0011 U	0.0013 U
Trichloroethene	0.001 U	0.001 U	0.001 U	0.001 U	0.0011 U	0.0013 U
Trichlorofluoromethane (Freon-11)	0.001 U	0.001 U	0.001 U	0.001 U	0.0011 U	0.0013 U
Vinyl chloride	0.001 UQ	0.001 UQ	0.001 UQ	0.001 UQ	0.0011 UQ	0.0013 UQ
Xylene, total	0.002 U	0.002 U	0.0021 U	0.001 J	0.0021 U	0.0025 U
Semivolatile Organic Compounds (MG/KG)						
Benzo(a)pyrene	0.018 J	0.027 U	0.028 U	0.027 U	0.034 U	0.034 U
Polychlorinated Biphenyls (MG/KG)						
Aroclor-1254	0.02 U	0.02 U	0.021 UQ	0.02 U	0.025 U	0.025 U
Aroclor-1260	0.02 U	0.02 U	0.02 J	0.02 U	0.025 U	0.025 U
Total Metals (MG/KG)						
Antimony	2.72 U	2.47 U	0.458 J	2.26 U	2.92 U	2.53 U
Arsenic	1.36 U	0.645 J	0.544 J	1.13 U	5.1	4.31
Cobalt	0.17 J	0.0999 J	0.887	0.0841 J	3.67	3.87
Iron	796	536	779	412	7,770	9,250
Lead	3.45	2.12 J	6.82	12.1	4.96	7.26
Zinc	2.3	1.42	8.44	1.96	22.4	24.1

Notes:

B - Analyte also detected in an associated laboratory blank

J - Analyte present. Value may or may not be accurate or precise

P - Difference between the concentration on the two columns is greater than 25%; the lower of the two values is reported.

Q - One or more QC criteria outside acceptance limits

MG/KG - Milligram per kilogram

U - The material was analyzed for, but not detected

TABLE B-14

Phase I Background Groundwater Raw Analytical Results

TRDA Remedial Investigation Report

Harvey Point Defense Testing Activity

Hertford, North Carolina

Sample ID	HPDTA-BG-MW01-0613	HPDTA-BG-MW02-0613	HPDTA-BG-MW03-0613	HPDTA-BG-MW04-0613
Sample Date	6/21/13	6/21/13	6/21/13	6/21/13
Chemical Name				
Total Metals (µg/L)				
Aluminum	158	601	255	47.4 J
Antimony	0.44 U	0.44 U	0.44 U	0.44 U
Arsenic	10 U	10 U	10 U	10 U
Barium	34	3.93 J	4.22 J	7.8 J
Beryllium	0.37 U	0.37 U	0.0976 J	0.37 U
Cadmium	4 U	4 U	4 U	4 U
Calcium	29,000 D	6,000	8,420	6,100
Chromium	3 U	1.29 JQ	0.75 J	3 U
Cobalt	6.2	3.89	6.75	1.83
Copper	0.767 J	0.66 J	2.39	3.44
Iron	119	629	272	89
Lead	0.6 U	0.271 J	0.6 U	0.6 U
Magnesium	9,450	3,300	4,420	3,420
Manganese	367 D	80.6	260 D	120 D
Mercury	0.069 U	0.069 U	0.069 U	0.069 U
Nickel	3.33	2.56	6.48	2.32 J
Potassium	1,870 J	1,120 J	1,070 J	844 J
Selenium	2.6 U	2.6 U	2.6 U	2.6 U
Silver	0.116 U	0.116 U	0.116 U	0.116 U
Sodium	11,400 D	17,000 D	23,400 D	17,600 D
Thallium	0.23 U	0.23 U	0.23 U	0.23 U
Vanadium	0.716 J	1.24 Q	1.22	0.72 J
Zinc	7.42 J	4.55 JQ	7.65 J	2.75 J
Dissolved Metals (µg/L)				
Aluminum	15.2 J	8.63 JQ	25 U	7.16 J
Antimony	0.44 U	0.44 U	0.44 U	0.44 U
Arsenic	10 U	10 U	10 U	10 U
Barium	33.6	8 U	3.88 J	7.65 J
Beryllium	0.37 U	0.37 U	0.37 U	0.37 U
Cadmium	4 U	4 U	4 U	4 U
Calcium	28,600 D	5,890 Q	8,180	6,200
Chromium	3 U	3 U	3 U	3 U
Cobalt	6.13	3.54 Q	6.48	1.82
Copper	3.22	1.27 Q	1.1	0.891 J
Iron	12.1 J	15 U	6.63 J	51.2
Lead	0.6 U	0.6 U	0.6 U	0.6 U
Magnesium	9,190	3,200	4,440	3,410
Manganese	370 D	73.4	260 D	122 D
Mercury	0.069 U	0.069 U	0.069 U	0.069 U
Nickel	3.32	2.13 JQ	6.16	2.37 J
Potassium	1,850 J	1,050 J	1,050 J	841 J
Selenium	2.6 U	2.6 U	2.6 U	2.6 U
Silver	0.116 U	0.116 U	0.116 U	0.116 U
Sodium	11,900 D	16,000 D	23,400 D	16,800 D
Thallium	0.23 U	0.23 U	0.23 U	0.23 U
Vanadium	0.402 J	0.8 U	0.492 J	0.582 J
Zinc	7.22 J	2.9 J	7 J	4.33 J

Notes:

D - Compound identified in an analysis at a secondary dilution factor

J - Analyte present below the reporting limit

NS - Not sampled

Q - One or more quality control criteria failed.

U - The material was analyzed for, but not detected

µg/L - Micrograms per liter

TABLE B-15

Phase I Groundwater Raw Analytical Results - 2nd Street Disposal Area

TRDA Remedial Investigation Report

Harvey Point Defense Testing Activity

Hertford, North Carolina

Sample ID	**TR-2ND-MW01-0613**	**TR-2ND-MW02-0613**	**TR-2ND-SB04-GW-0613**	**TR-2ND-SB06-GW-0613**	**TR-2ND-SB07-GW-0613**
Sample Date	**6/20/13**	**6/20/13**	**6/19/13**	**6/19/13**	**6/19/13**
Chemical Name					
Volatile Organic Compounds (µg/L)					
1,1,1-Trichloroethane	1 U	1 U	1 U	1 U	1 U
1,1,2,2-Tetrachloroethane	1 U	1 U	1 U	1 U	1 U
1,1,2-Trichloro-1,2,2-trifluoroethane (Freon-113)	69	1 U	1 U	1 U	1 U
1,1,2-Trichloroethane	1 U	1 U	1 U	1 U	1 U
1,1-Dichloroethane	1 U	1 U	1 U	1 U	1 U
1,1-Dichloroethene	1 U	1 U	1 U	1 U	1 U
1,2,3-Trichlorobenzene	1 U	1 U	2.2 Q	1 U	1 U
1,2,4-Trichlorobenzene	1 U	1 U	6.4 Q	1 U	1 U
1,2-Dibromo-3-chloropropane	5 U	5 U	5 U	5 U	5 U
1,2-Dibromoethane	1 U	1 U	1 U	1 U	1 U
1,2-Dichlorobenzene	1 U	1 U	1 U	1 U	1 U
1,2-Dichloroethane	1 U	1 U	1 U	1 U	1 U
1,2-Dichloropropane	1 U	1 U	1 U	1 U	1 U
1,3-Dichlorobenzene	1 U	1 U	1 U	1 U	1 U
1,4-Dichlorobenzene	1 U	1 U	1 U	1 U	1 U
1,4-Dioxane	50 U	50 U	50 U	50 U	50 U
2-Butanone	12 U	12 U	12 U	12 U	12 U
2-Hexanone	2.5 U	2.5 U	2.5 U	2.5 U	2.5 U
4-Methyl-2-pentanone	2.5 U	2.5 U	2.5 U	2.5 U	2.5 U
Acetone	12 U	12 U	12 U	12 U	12 U
Benzene	1 U	1 U	1 U	1 U	1 U
Bromochloromethane	1 U	1 U	1 U	1 U	1 U
Bromodichloromethane	1 U	1 U	1 U	1 U	1 U
Bromoform	1 U	1 U	1 U	1 U	1 U
Bromomethane	1 U	1 U	1 U	1 U	1 U
Carbon disulfide	5 U	5 U	5 U	5 U	5 U
Carbon tetrachloride	1 U	1 U	1 U	1 U	1 U
Chlorobenzene	1 U	1 U	1 U	1 U	1 U
Chloroethane	1 U	1 U	1 U	1 U	1 U
Chloroform	1 U	1 U	1 U	1 U	1 U
Chloromethane	1 U	1 U	1 U	1 U	1 U
cis-1,2-Dichloroethene	1 U	1 U	1 U	1 U	1 U
cis-1,3-Dichloropropene	1 U	1 U	1 U	1 U	1 U
Cyclohexane	1 U	1 U	1 U	1 U	1 U
Dibromochloromethane	1 U	1 U	1 U	1 U	1 U
Dichlorodifluoromethane (Freon-12)	140	12	1 U	1 U	1 U
Ethane	1.96 U	1.96 U	NS	NS	NS
Ethene	2.71 U	2.71 U	NS	NS	NS
Ethylbenzene	1 U	1 U	1 U	1 U	1 U
Isopropylbenzene	1 U	1 U	1 U	1 U	1 U
m- and p-Xylene	2 U	2 U	2 U	2 U	2 U

TABLE B-15

Phase I Groundwater Raw Analytical Results - 2nd Street Disposal Area

TRDA Remedial Investigation Report

Harvey Point Defense Testing Activity

Hertford, North Carolina

Sample ID	**TR-2ND-MW01-0613**	**TR-2ND-MW02-0613**	**TR-2ND-SB04-GW-0613**	**TR-2ND-SB06-GW-0613**	**TR-2ND-SB07-GW-0613**
Sample Date	**6/20/13**	**6/20/13**	**6/19/13**	**6/19/13**	**6/19/13**
Chemical Name					
Methane	25.7	6.58	NS	NS	NS
Methyl acetate	1 U	1 U	1 U	1 U	1 U
Methylcyclohexane	1 U	1 U	1 U	1 U	1 U
Methylene chloride	5 U	5 U	5 U	5 U	5 U
Methyl-tert-butyl ether (MTBE)	1 U	1 U	1 U	1 U	1 U
o-Xylene	1 U	1 U	1 U	1 U	1 U
Styrene	1 U	1 U	1 U	1 U	1 U
Tetrachloroethene	2.3	1 U	1 U	1 U	1 U
Toluene	1 U	1 U	1 U	1 U	1 U
trans-1,2-Dichloroethene	1 U	1 U	1 U	1 U	1 U
trans-1,3-Dichloropropene	1 U	1 U	1 U	1 U	1 U
Trichloroethene	1 U	1 U	1 U	1 U	1 U
Trichlorofluoromethane (Freon-11)	580 D	18	1 U	1 U	1 U
Vinyl chloride	1 U	1 U	1 U	1 U	1 U
Xylene, total	2 U	2 U	2 U	2 U	2 U
Semivolatile Organic Compounds (µg/L)					
1,1-Biphenyl	9 U	9 U	9 U	9 U	9 U
1,2,4,5-Tetrachlorobenzene	6 U	6 U	6 U	6 U	6 U
2,2'-Oxybis(1-chloropropane)	6 U	6 U	6 U	6 U	6 U
2,3,4,6-Tetrachlorophenol	6 U	6 U	6 U	6 U	6 U
2,4,5-Trichlorophenol	6 U	6 U	6 U	6 U	6 U
2,4,6-Trichlorophenol	6 U	6 U	6 U	6 U	6 U
2,4-Dichlorophenol	6 U	6 U	6 U	6 U	6 U
2,4-Dimethylphenol	6 U	6 U	6 U	6 U	6 U
2,4-Dinitrophenol	6 U	6 U	6 U	6 U	6 U
2,4-Dinitrotoluene	6 U	6 U	6 U	6 U	6 U
2,6-Dinitrotoluene	3 U	3 U	3 U	3 U	3 U
2-Chloronaphthalene	3 U	3 U	3 U	3 U	3 U
2-Chlorophenol	6 U	6 U	6 U	6 U	6 U
2-Methylnaphthalene	0.08 U	0.08 U	0.08 U	0.08 U	0.08 U
2-Methylphenol	3 U	3 U	3 U	3 U	3 U
2-Nitroaniline	3 U	3 U	3 U	3 U	3 U
2-Nitrophenol	6 U	6 U	6 U	6 U	6 U
3- and 4-Methylphenol	6 U	6 U	6 U	6 U	6 U
3,3'-Dichlorobenzidine	6 U	6 U	6 U	6 U	6 U
3-Nitroaniline	3 U	3 U	3 U	3 U	3 U
4,6-Dinitro-2-methylphenol	6 U	6 U	6 U	6 U	6 U
4-Bromophenyl-phenylether	6 U	6 U	6 U	6 U	6 U
4-Chloro-3-methylphenol	6 U	6 U	6 U	6 U	6 U
4-Chloroaniline	6 U	6 U	6 U	6 U	6 U
4-Chlorophenyl-phenylether	6 U	6 U	6 U	6 U	6 U

TABLE B-15

Phase I Groundwater Raw Analytical Results - 2nd Street Disposal Area

TRDA Remedial Investigation Report

Harvey Point Defense Testing Activity

Hertford, North Carolina

Sample ID	**TR-2ND-MW01-0613**	**TR-2ND-MW02-0613**	**TR-2ND-SB04-GW-0613**	**TR-2ND-SB06-GW-0613**	**TR-2ND-SB07-GW-0613**
Sample Date	**6/20/13**	**6/20/13**	**6/19/13**	**6/19/13**	**6/19/13**
Chemical Name					
4-Nitroaniline	3 U	3 U	3 U	3 U	3 U
4-Nitrophenol	3 U	3 U	3 U	3 U	3 U
Acenaphthene	0.08 U	0.08 U	0.08 U	0.08 U	0.08 U
Acenaphthylene	0.08 U	0.08 U	0.08 U	0.08 U	0.08 U
Acetophenone	3 U	3 U	3 U	3 U	3 U
Anthracene	0.08 U	0.08 U	0.08 U	0.08 U	0.08 U
Atrazine	3 UQ	3 UQ	3 UQ	3 UQ	3 UQ
Benzaldehyde	6 U	6 U	6 U	6 U	6 U
Benzo(a)anthracene	0.08 U	0.08 U	0.08 U	0.08 U	0.08 U
Benzo(a)pyrene	0.08 UQ	0.08 UQ	0.08 UQ	0.08 UQ	0.08 UQ
Benzo(b)fluoranthene	0.08 U	0.08 U	0.08 U	0.08 U	0.08 U
Benzo(g,h,i)perylene	0.08 U	0.08 U	0.08 U	0.08 U	0.08 U
Benzo(k)fluoranthene	0.08 U	0.08 U	0.08 U	0.08 U	0.08 U
bis(2-Chloroethoxy)methane	6 U	6 U	6 U	6 U	6 U
bis(2-Chloroethyl)ether	6 U	6 U	6 U	6 U	6 U
bis(2-Ethylhexyl)phthalate	6 U	6 U	22	6 U	8.9 J
Butylbenzylphthalate	3 U	3 U	3 U	3 U	3 U
Caprolactam	3 U	3 U	3 U	3 U	3 U
Carbazole	3 U	3 U	3 U	3 U	3 U
Chrysene	0.08 U	0.08 U	0.08 U	0.08 U	0.08 U
Dibenz(a,h)anthracene	0.08 U	0.08 U	0.08 U	0.08 U	0.08 U
Dibenzofuran	3 U	3 U	3 U	3 U	3 U
Diethylphthalate	3 U	3 U	3 U	3 U	3 U
Dimethyl phthalate	3 U	3 U	3 U	3 U	3 U
Di-n-butylphthalate	3 U	3 U	3 U	3 U	3 U
Di-n-octylphthalate	6 U	6 U	6 U	6 U	6 U
Fluoranthene	0.08 U	0.08 U	0.08 U	0.08 U	0.08 U
Fluorene	0.08 U	0.08 U	0.08 U	0.08 U	0.08 U
Hexachlorobenzene	3 U	3 U	3 U	3 U	3 U
Hexachlorobutadiene	6 U	6 U	6 U	6 U	6 U
Hexachlorocyclopentadiene	6 U	6 U	6 U	6 U	6 U
Hexachloroethane	3 U	3 U	3 U	3 U	3 U
Indeno(1,2,3-cd)pyrene	0.08 U	0.08 U	0.08 U	0.08 U	0.08 U
Isophorone	3 U	3 U	3 U	3 U	3 U
Naphthalene	0.08 U	0.08 U	0.08 U	0.08 U	0.08 U
Nitrobenzene	6 U	6 U	6 U	6 U	6 U
n-Nitroso-di-n-propylamine	6 U	6 U	6 U	6 U	6 U
n-Nitrosodiphenylamine	6 U	6 U	6 U	6 U	6 U
Pentachlorophenol	9 U	9 U	9 U	9 U	9 U
Phenanthrene	0.08 U	0.08 U	0.08 U	0.08 U	0.08 U
Phenol	3 U	3 U	3 U	3 U	3 U
Pyrene	0.08 U	0.08 U	0.08 U	0.08 U	0.08 U

TABLE B-15

Phase I Groundwater Raw Analytical Results - 2nd Street Disposal Area

TRDA Remedial Investigation Report

Harvey Point Defense Testing Activity

Hertford, North Carolina

Sample ID	**TR-2ND-MW01-0613**	**TR-2ND-MW02-0613**	**TR-2ND-SB04-GW-0613**	**TR-2ND-SB06-GW-0613**	**TR-2ND-SB07-GW-0613**
Sample Date	**6/20/13**	**6/20/13**	**6/19/13**	**6/19/13**	**6/19/13**
Chemical Name					
Pesticide/Polychlorinated Biphenyls (µg/L)					
4,4'-DDD	0.05 U	0.05 U	NS	NS	NS
4,4'-DDE	0.05 U	0.05 U	NS	NS	NS
4,4'-DDT	0.05 U	0.05 U	NS	NS	NS
Aldrin	0.05 U	0.05 U	NS	NS	NS
alpha-BHC	0.05 U	0.05 U	NS	NS	NS
alpha-Chlordane	0.05 U	0.05 U	NS	NS	NS
Aroclor-1016	0.5 U	0.5 U	NS	NS	NS
Aroclor-1016/1242	0.5 U	0.5 U	NS	NS	NS
Aroclor-1221	0.5 U	0.5 U	NS	NS	NS
Aroclor-1232	0.5 U	0.5 U	NS	NS	NS
Aroclor-1242	0.5 U	0.5 U	NS	NS	NS
Aroclor-1248	0.5 U	0.5 U	NS	NS	NS
Aroclor-1254	0.5 U	0.5 U	NS	NS	NS
Aroclor-1260	0.5 U	0.5 U	NS	NS	NS
Aroclor-1262	0.5 U	0.5 U	NS	NS	NS
Aroclor-1268	0.5 U	0.5 U	NS	NS	NS
beta-BHC	0.05 U	0.05 U	NS	NS	NS
delta-BHC	0.05 U	0.05 U	NS	NS	NS
Dieldrin	0.05 U	0.05 U	NS	NS	NS
Endosulfan I	0.05 U	0.05 U	NS	NS	NS
Endosulfan II	0.05 U	0.05 U	NS	NS	NS
Endosulfan sulfate	0.05 U	0.05 U	NS	NS	NS
Endrin	0.05 U	0.05 U	NS	NS	NS
Endrin aldehyde	0.05 U	0.05 U	NS	NS	NS
Endrin ketone	0.05 U	0.05 U	NS	NS	NS
gamma-BHC (Lindane)	0.05 U	0.05 U	NS	NS	NS
gamma-Chlordane	0.05 U	0.05 U	NS	NS	NS
Heptachlor	0.05 U	0.05 U	NS	NS	NS
Heptachlor epoxide	0.05 U	0.05 U	NS	NS	NS
Methoxychlor	0.05 U	0.05 U	NS	NS	NS
Toxaphene	0.64 U	0.64 U	NS	NS	NS
Total Metals (µg/L)					
Aluminum	204	328 Q	NS	NS	NS
Antimony	0.122 J	0.44 U	NS	NS	NS
Arsenic	0.895 J	10 U	NS	NS	NS
Barium	19.1	16.4 Q	NS	NS	NS
Beryllium	0.37 U	0.37 U	NS	NS	NS
Cadmium	4 U	4 U	NS	NS	NS
Calcium	44,100 D	25,700 D	NS	NS	NS

TABLE B-15

Phase I Groundwater Raw Analytical Results - 2nd Street Disposal Area

TRDA Remedial Investigation Report

Harvey Point Defense Testing Activity

Hertford, North Carolina

Sample ID	**TR-2ND-MW01-0613**	**TR-2ND-MW02-0613**	**TR-2ND-SB04-GW-0613**	**TR-2ND-SB06-GW-0613**	**TR-2ND-SB07-GW-0613**
Sample Date	**6/20/13**	**6/20/13**	**6/19/13**	**6/19/13**	**6/19/13**
Chemical Name					
Chromium	3 U	0.996 JQ	NS	NS	NS
Cobalt	7.72	4.68 Q	NS	NS	NS
Copper	0.665 J	0.831 JQ	NS	NS	NS
Iron	351	310	NS	NS	NS
Lead	0.6 U	0.174 J	NS	NS	NS
Magnesium	20,100 D	11,700 D	NS	NS	NS
Manganese	1,080 D	422 D	NS	NS	NS
Mercury	0.069 U	NS	NS	NS	NS
Nickel	5.87	3.92	NS	NS	NS
Potassium	3,210 J	2,130 J	NS	NS	NS
Selenium	2.6 U	2.6 U	NS	NS	NS
Silver	0.116 U	0.116 U	NS	NS	NS
Sodium	46,800 D	21,200 D	NS	NS	NS
Thallium	0.23 U	0.23 U	NS	NS	NS
Vanadium	1.11	1.03 Q	NS	NS	NS
Zinc	10.9 J	9.45 J	NS	NS	NS
Wet Chemistry (µg/L)					
Alkalinity	150,000	99000	NS	NS	NS
Chloride	17000	4000 J	NS	NS	NS
Nitrate	210 U	270 J	NS	NS	NS
Nitrite	70 U	70 U	NS	NS	NS
Sulfate	100000 D	45000	NS	NS	NS
Sulfide	1000 U	1000 U	NS	NS	NS
Total organic carbon (TOC)	3	1500	NS	NS	NS
General Microbial Analyses (CELLS/ML)					
Dehalococcoides	0.3 U	NS	NS	NS	NS

Notes:

CELLS/ML - Cells per milliliter

D - Compound identified in an analysis at a secondary dilution factor

J - Analyte present below the reporting limit

NS - Not sampled

Q - One or more quality control criteria failed.

U - The material was analyzed for, but not detected

µg/L - Micrograms per liter

TABLE B-16

Phase I Groundwater Raw Analytical Results - 5th Street Disposal Area

TRDA Remedial Investigation Report

Harvey Point Defense Testing Activity

Hertford, North Carolina

Sample ID	**TR-5TH-MW01-0613**	**TR-5TH-MW02-0613**	**TR-5TH-SB03-GW-0613**	**TR-5TH-SB04-GW-0613**	**TR-5TH-SB05D-GW-0613**	**TR-5TH-SB05-GW-0613**	**TR-5TH-SB06-GW-0613**
Sample Date	**6/20/13**	**6/20/13**	**6/17/13**	**6/17/13**	**6/18/13**	**6/18/13**	**6/18/13**
Chemical Name							
Volatile Organic Compounds (µg/L)							
1,1,1-Trichloroethane	1 U	1 U	1 U	1 U	1 U	1 U	1 U
1,1,2,2-Tetrachloroethane	1 U	1 U	1 U	1 U	1 U	1 U	1 U
1,1,2-Trichloro-1,2,2-trifluoroethane (Freon-113)	1 U	1 U	1 U	1 U	1 U	1 U	1 U
1,1,2-Trichloroethane	1 U	1 U	1 U	1 U	1 U	1 U	1 U
1,1-Dichloroethane	1 U	1 U	1 U	1 U	1 U	1 U	1 U
1,1-Dichloroethene	1 U	1 U	1 U	1 U	1 U	1 U	1 U
1,2,3-Trichlorobenzene	1 U	330 D	1 U	1 U	1 U	1 U	1 U
1,2,4-Trichlorobenzene	1 U	1,300 D	1 U	1 U	1 U	1 U	1 U
1,2-Dibromo-3-chloropropane	5 U	5 U	5 U	5 U	5 U	5 U	5 U
1,2-Dibromoethane	1 U	1 U	1 U	1 U	1 U	1 U	1 U
1,2-Dichlorobenzene	1 U	210 D	1 U	3.6	1 U	1 U	1 U
1,2-Dichloroethane	1 U	1 U	1 U	1 U	1 U	1 U	1 U
1,2-Dichloropropane	1 U	1 U	1 U	1 U	1 U	1 U	1 U
1,3-Dichlorobenzene	1 U	52	1 U	1 U	1 U	1 U	1 U
1,4-Dichlorobenzene	1 U	260 D	1 U	1 U	1 U	1 U	1 U
1,4-Dioxane	50 U	50 U	50 U	50 U	50 U	50 U	50 U
2-Butanone	12 U	12 U	12 U	12 U	12 U	12 U	12 U
2-Hexanone	2.5 U	2.5 U	2.5 U	2.5 U	2.5 U	2.5 U	2.5 U
4-Methyl-2-pentanone	2.5 U	2.5 U	2.5 U	2.5 U	2.5 U	2.5 U	2.5 U
Acetone	12 U	12 U	12 U	12 U	12 U	12 U	12 U
Benzene	1 U	1.8 J	1 U	1 U	1 U	1 U	1 U
Bromochloromethane	1 U	1 U	1 U	1 U	1 U	1 U	1 U
Bromodichloromethane	1 U	1 U	1 U	1 U	1 U	1 U	1 U
Bromoform	1 U	1 U	1 U	1 U	1 U	1 U	1 U
Bromomethane	1 U	1 U	1 U	1 U	1 U	1 U	1 U
Carbon disulfide	5 U	5 U	5 U	5 U	5 U	5 U	5 U
Carbon tetrachloride	1 U	1 U	1 U	1 U	1 U	1 U	1 U
Chlorobenzene	1 U	30	1 U	1.3 J	1 U	1 U	1 U
Chloroethane	1 U	1 U	1 U	1 U	1 U	1 U	1 U
Chloroform	1 U	1 U	1 U	1 U	1 U	1 U	1 U
Chloromethane	1 U	1 U	1 U	1 U	1 U	1 U	1 U
cis-1,2-Dichloroethene	1 U	1 U	1 U	1 U	1 U	1 U	1 U
cis-1,3-Dichloropropene	1 U	1 U	1 U	1 U	1 U	1 U	1 U
Cyclohexane	1 U	1 U	1 U	1 U	1 U	1 U	1 U
Dibromochloromethane	1 U	1 U	1 U	1 U	1 U	1 U	1 U
Dichlorodifluoromethane (Freon-12)	1 U	1 U	1 U	0.78 J	1 U	1 U	1 U
Ethane	1.96 U	1.96 U	NS	NS	NS	NS	NS
Ethene	2.71 U	2.71 U	NS	NS	NS	NS	NS
Ethylbenzene	1 U	1 U	1 U	1 U	1 U	1 U	1 U
Isopropylbenzene	1 U	0.96 J	1 U	1 U	1 U	1 U	1 U
m- and p-Xylene	2 U	2 U	2 U	2 U	2 U	2 U	2 U

TABLE B-16

Phase I Groundwater Raw Analytical Results - 5th Street Disposal Area

TRDA Remedial Investigation Report

Harvey Point Defense Testing Activity

Hertford, North Carolina

Sample ID	**TR-5TH-MW01-0613**	**TR-5TH-MW02-0613**	**TR-5TH-SB03-GW-0613**	**TR-5TH-SB04-GW-0613**	**TR-5TH-SB05D-GW-0613**	**TR-5TH-SB05-GW-0613**	**TR-5TH-SB06-GW-0613**
Sample Date	**6/20/13**	**6/20/13**	**6/17/13**	**6/17/13**	**6/18/13**	**6/18/13**	**6/18/13**
Chemical Name							
Methane	38.6	48.8	NS	NS	NS	NS	NS
Methyl acetate	1 U	1 U	1 U	1 U	1 U	1 U	1 U
Methylcyclohexane	1 U	1 U	1 U	1 U	1 U	1 U	1 U
Methylene chloride	5 U	5 U	5 U	5 U	5 U	5 U	5 U
Methyl-tert-butyl ether (MTBE)	3.1	270 D	1 U	10	1 U	1 U	1 U
o-Xylene	1 U	1 U	1 U	1 U	1 U	1 U	1 U
Styrene	1 U	1 U	1 U	1 U	1 U	1 U	1 U
Tetrachloroethene	1 U	1 U	1 U	1 U	1 U	1 U	1 U
Toluene	1 U	1 U	1 U	1 U	1 U	1 U	1 U
trans-1,2-Dichloroethene	1 U	1 U	1 U	1 U	1 U	1 U	1 U
trans-1,3-Dichloropropene	1 U	1 U	1 U	1 U	1 U	1 U	1 U
Trichloroethene	1 U	1 U	1 U	1 U	1 U	1 U	1 U
Trichlorofluoromethane (Freon-11)	1 U	1 U	1 U	1 U	1 U	1 U	1 U
Vinyl chloride	1 U	1 U	1 U	1 U	1 U	1 U	1 U
Xylene, total	2 U	2 U	2 U	2 U	2 U	2 U	2 U
Semivolatile Organic Compounds (µg/L)							
1,1-Biphenyl	9 U	9 U	9 UQ	9 UQ	9 UQ	9 UQ	9 UQ
1,2,4,5-Tetrachlorobenzene	6 U	6 U	6 U	6 U	6 U	6 U	6 U
2,2'-Oxybis(1-chloropropane)	6 U	6 U	6 U	6 U	6 U	6 U	6 U
2,3,4,6-Tetrachlorophenol	6 U	6 U	6 U	6 U	6 U	6 U	6 U
2,4,5-Trichlorophenol	6 U	6 U	6 U	6 U	6 U	6 U	6 U
2,4,6-Trichlorophenol	6 U	6 U	6 U	6 U	6 U	6 U	6 U
2,4-Dichlorophenol	6 U	6 U	6 U	6 U	6 U	6 U	6 U
2,4-Dimethylphenol	6 U	6 U	6 U	6 U	6 U	6 U	6 U
2,4-Dinitrophenol	6 U	6 U	6 U	6 U	6 U	6 U	6 U
2,4-Dinitrotoluene	6 U	6 U	6 U	6 U	6 U	6 U	6 U
2,6-Dinitrotoluene	3 U	3 U	3 U	3 U	3 U	3 U	3 U
2-Chloronaphthalene	3 U	3 U	3 UQ	3 UQ	3 UQ	3 UQ	3 UQ
2-Chlorophenol	6 U	6 U	6 U	6 U	6 U	6 U	6 U
2-Methylnaphthalene	0.08 U	0.08 U	0.08 U	0.08 U	0.08 U	0.08 U	0.08 U
2-Methylphenol	3 U	3 U	3 U	3 U	3 U	3 U	3 U
2-Nitroaniline	3 U	3 U	3 U	3 U	3 U	3 U	3 U
2-Nitrophenol	6 U	6 U	6 U	6 U	6 U	6 U	6 U
3- and 4-Methylphenol	6 U	6 U	6 U	6 U	6 U	6 U	6 U
3,3'-Dichlorobenzidine	6 U	6 U	6 U	6 U	6 U	6 U	6 U
3-Nitroaniline	3 U	3 U	3 U	3 U	3 U	3 U	3 U
4,6-Dinitro-2-methylphenol	6 U	6 U	6 U	6 U	6 U	6 U	6 U
4-Bromophenyl-phenylether	6 U	6 U	6 U	6 U	6 U	6 U	6 U
4-Chloro-3-methylphenol	6 U	6 U	6 U	6 U	6 U	6 U	6 U
4-Chloroaniline	6 U	6 U	6 U	6 U	6 U	6 U	6 U
4-Chlorophenyl-phenylether	6 U	6 U	6 U	6 U	6 U	6 U	6 U

TABLE B-16

Phase I Groundwater Raw Analytical Results - 5th Street Disposal Area

TRDA Remedial Investigation Report

Harvey Point Defense Testing Activity

Hertford, North Carolina

Sample ID	**TR-5TH-MW01-0613**	**TR-5TH-MW02-0613**	**TR-5TH-SB03-GW-0613**	**TR-5TH-SB04-GW-0613**	**TR-5TH-SB05D-GW-0613**	**TR-5TH-SB05-GW-0613**	**TR-5TH-SB06-GW-0613**
Sample Date	**6/20/13**	**6/20/13**	**6/17/13**	**6/17/13**	**6/18/13**	**6/18/13**	**6/18/13**
Chemical Name							
4-Nitroaniline	3 U	3 U	3 U	3 U	3 U	3 U	3 U
4-Nitrophenol	3 U	3 U	3 U	3 U	3 U	3 U	3 U
Acenaphthene	0.08 U	0.08 U	0.08 U	0.08 U	0.08 U	0.08 U	0.08 U
Acenaphthylene	0.08 U	0.08 U	0.08 U	0.08 U	0.08 U	0.08 U	0.08 U
Acetophenone	3 U	3 U	3 U	3 U	3 U	3 U	3 U
Anthracene	0.08 U	0.08 U	0.08 U	0.2	0.08 U	0.08 U	0.08 U
Atrazine	3 UQ	3 UQ	3 U	3 U	3 U	3 U	3 U
Benzaldehyde	6 U	6 U	6 U	6 U	6 U	6 U	6 U
Benzo(a)anthracene	0.08 U	0.08 U	0.08 U	0.08 U	0.08 U	0.08 U	0.08 U
Benzo(a)pyrene	0.08 UQ	0.08 UQ	0.08 UQ	0.08 UQ	0.08 UQ	0.08 UQ	0.08 UQ
Benzo(b)fluoranthene	0.08 U	0.08 U	0.08 U	0.08 U	0.08 U	0.08 U	0.08 U
Benzo(g,h,i)perylene	0.08 U	0.08 U	0.08 U	0.08 U	0.08 U	0.08 U	0.08 U
Benzo(k)fluoranthene	0.08 U	0.08 U	0.08 U	0.08 U	0.08 U	0.08 U	0.08 U
bis(2-Chloroethoxy)methane	6 U	6 U	6 U	6 U	6 U	6 U	6 U
bis(2-Chloroethyl)ether	6 U	6 U	6 U	6 U	6 U	6 U	6 U
bis(2-Ethylhexyl)phthalate	6 U	6 U	6 U	4.9 J	11	7.1 J	10
Butylbenzylphthalate	3 U	3 U	3 U	3 U	3 U	3 U	3 U
Caprolactam	3 U	3 U	3 U	3 U	3 U	3 U	3 U
Carbazole	3 U	3 U	3 U	3 U	3 U	3 U	3 U
Chrysene	0.08 U	0.08 U	0.08 U	0.08 U	0.08 U	0.08 U	0.08 U
Dibenz(a,h)anthracene	0.08 U	0.08 U	0.08 U	0.08 U	0.08 U	0.08 U	0.08 U
Dibenzofuran	3 U	3 U	3 U	3 U	3 U	3 U	3 U
Diethylphthalate	3 U	3 U	3 U	3 U	3 U	3 U	3 U
Dimethyl phthalate	3 U	3 U	3 U	3 U	3 U	3 U	3 U
Di-n-butylphthalate	3 U	3 U	3 U	3 U	3 U	3 U	3 U
Di-n-octylphthalate	6 U	6 U	6 UQ	6 UQ	6 UQ	6 UQ	6 UQ
Fluoranthene	0.08 U	0.08 U	0.08 U	0.08 U	0.08 U	0.08 U	0.08 U
Fluorene	0.08 U	0.08 U	0.076 J	0.08 U	0.08 U	0.08 U	0.08 U
Hexachlorobenzene	3 U	3 U	3 U	3 U	3 U	3 U	3 U
Hexachlorobutadiene	6 U	6 U	6 U	6 U	6 U	6 U	6 U
Hexachlorocyclopentadiene	6 U	6 U	6 U	6 U	6 U	6 U	6 U
Hexachloroethane	3 U	3 U	3 U	3 U	3 U	3 U	3 U
Indeno(1,2,3-cd)pyrene	0.08 U	0.08 U	0.08 U	0.08 U	0.08 U	0.08 U	0.08 U
Isophorone	3 U	3 U	3 U	3 U	3 U	3 U	3 U
Naphthalene	0.08 U	0.084 J	0.08 U	0.08 U	0.08 U	0.08 U	0.08 U
Nitrobenzene	6 U	6 U	6 U	6 U	6 U	6 U	6 U
n-Nitroso-di-n-propylamine	6 U	6 U	6 U	6 U	6 U	6 U	6 U
n-Nitrosodiphenylamine	6 U	6 U	6 U	6 U	6 U	6 U	6 U
Pentachlorophenol	9 U	9 U	9 U	9 U	9 U	9 U	9 U
Phenanthrene	0.08 U	0.08 U	0.08 U	0.08 U	0.08 U	0.08 U	0.08 U
Phenol	3 U	3 U	3 U	3 U	3 U	3 U	3 U
Pyrene	0.08 U	0.08 U	0.08 U	0.08 U	0.08 U	0.08 U	0.08 U

TABLE B-16

Phase I Groundwater Raw Analytical Results - 5th Street Disposal Area

TRDA Remedial Investigation Report

Harvey Point Defense Testing Activity

Hertford, North Carolina

Sample ID	**TR-5TH-MW01-0613**	**TR-5TH-MW02-0613**	**TR-5TH-SB03-GW-0613**	**TR-5TH-SB04-GW-0613**	**TR-5TH-SB05D-GW-0613**	**TR-5TH-SB05-GW-0613**	**TR-5TH-SB06-GW-0613**
Sample Date	**6/20/13**	**6/20/13**	**6/17/13**	**6/17/13**	**6/18/13**	**6/18/13**	**6/18/13**
Chemical Name							
Pesticide/Polychlorinated Biphenyls (µg/L)							
4,4'-DDD	0.05 U	0.05 U	NS	NS	NS	NS	NS
4,4'-DDE	0.05 U	0.05 U	NS	NS	NS	NS	NS
4,4'-DDT	0.05 U	0.05 U	NS	NS	NS	NS	NS
Aldrin	0.05 U	0.05 U	NS	NS	NS	NS	NS
alpha-BHC	0.05 U	0.05 U	NS	NS	NS	NS	NS
alpha-Chlordane	0.05 U	0.05 U	NS	NS	NS	NS	NS
Aroclor-1016	0.5 U	0.5 U	NS	NS	NS	NS	NS
Aroclor-1016/1242	0.5 U	0.5 U	NS	NS	NS	NS	NS
Aroclor-1221	0.5 U	0.5 U	NS	NS	NS	NS	NS
Aroclor-1232	0.5 U	0.5 U	NS	NS	NS	NS	NS
Aroclor-1242	0.5 U	0.5 U	NS	NS	NS	NS	NS
Aroclor-1248	0.5 U	0.5 U	NS	NS	NS	NS	NS
Aroclor-1254	0.5 U	0.5 U	NS	NS	NS	NS	NS
Aroclor-1260	0.5 U	0.5 U	NS	NS	NS	NS	NS
Aroclor-1262	0.5 U	0.5 U	NS	NS	NS	NS	NS
Aroclor-1268	0.5 U	0.5 U	NS	NS	NS	NS	NS
beta-BHC	0.05 U	0.05 U	NS	NS	NS	NS	NS
delta-BHC	0.05 U	0.05 U	NS	NS	NS	NS	NS
Dieldrin	0.05 U	0.05 U	NS	NS	NS	NS	NS
Endosulfan I	0.05 U	0.05 U	NS	NS	NS	NS	NS
Endosulfan II	0.05 U	0.05 U	NS	NS	NS	NS	NS
Endosulfan sulfate	0.05 U	0.05 U	NS	NS	NS	NS	NS
Endrin	0.05 U	0.05 U	NS	NS	NS	NS	NS
Endrin aldehyde	0.05 U	0.05 U	NS	NS	NS	NS	NS
Endrin ketone	0.05 U	0.05 U	NS	NS	NS	NS	NS
gamma-BHC (Lindane)	0.05 U	0.05 U	NS	NS	NS	NS	NS
gamma-Chlordane	0.05 U	0.05 U	NS	NS	NS	NS	NS
Heptachlor	0.05 U	0.05 U	NS	NS	NS	NS	NS
Heptachlor epoxide	0.05 U	0.05 U	NS	NS	NS	NS	NS
Methoxychlor	0.05 U	0.05 U	NS	NS	NS	NS	NS
Toxaphene	0.64 U	0.64 U	NS	NS	NS	NS	NS
Total Metals (µg/L)							
Aluminum	170	2,000 D	NS	NS	NS	NS	NS
Antimony	0.44 U	0.44 U	NS	NS	NS	NS	NS
Arsenic	3.11 J	1.47 J	NS	NS	NS	NS	NS
Barium	51.3	54.9	NS	NS	NS	NS	NS
Beryllium	0.37 U	0.128 J	NS	NS	NS	NS	NS
Cadmium	4 U	0.169 J	NS	NS	NS	NS	NS
Calcium	45,600 D	39,600 D	NS	NS	NS	NS	NS

TABLE B-16

Phase I Groundwater Raw Analytical Results - 5th Street Disposal Area

TRDA Remedial Investigation Report

Harvey Point Defense Testing Activity

Hertford, North Carolina

Sample ID	**TR-5TH-MW01-0613**	**TR-5TH-MW02-0613**	**TR-5TH-SB03-GW-0613**	**TR-5TH-SB04-GW-0613**	**TR-5TH-SB05D-GW-0613**	**TR-5TH-SB05-GW-0613**	**TR-5TH-SB06-GW-0613**
Sample Date	**6/20/13**	**6/20/13**	**6/17/13**	**6/17/13**	**6/18/13**	**6/18/13**	**6/18/13**
Chemical Name							
Chromium	3 U	3.13 J	NS	NS	NS	NS	NS
Cobalt	9.18	7.71	NS	NS	NS	NS	NS
Copper	0.621 J	4.72	NS	NS	NS	NS	NS
Iron	1,300 D	1,550 D	NS	NS	NS	NS	NS
Lead	0.6 U	0.874 J	NS	NS	NS	NS	NS
Magnesium	19,500 D	15,000 D	NS	NS	NS	NS	NS
Manganese	561 D	383 D	NS	NS	NS	NS	NS
Mercury	0.069 U	NS	NS	NS	NS	NS	NS
Nickel	4.34	6.59	NS	NS	NS	NS	NS
Potassium	3,770	3,570	NS	NS	NS	NS	NS
Selenium	2.6 U	2.6 U	NS	NS	NS	NS	NS
Silver	0.116 U	0.116 U	NS	NS	NS	NS	NS
Sodium	21,100 D	35,000 D	NS	NS	NS	NS	NS
Thallium	0.23 U	0.23 U	NS	NS	NS	NS	NS
Vanadium	1.08	5.28	NS	NS	NS	NS	NS
Zinc	25.3	11.7 J	NS	NS	NS	NS	NS
Wet Chemistry (µg/L)							
Alkalinity	120,000	62000	NS	NS	NS	NS	NS
Chloride	6200	23000	NS	NS	NS	NS	NS
Nitrate	210 U	210 U	NS	NS	NS	NS	NS
Nitrite	70 U	70 U	NS	NS	NS	NS	NS
Sulfate	95000	120,000 D	NS	NS	NS	NS	NS
Sulfide	1000 U	1000 U	NS	NS	NS	NS	NS
Total organic carbon (TOC)	2800	4400	NS	NS	NS	NS	NS
General Microbial Analyses (CELLS/ML)							
Dehalococcoides	0.3 U	NS	NS	NS	NS	NS	NS

Notes:

CELLS/ML - Cells per milliliter

D - Compound identified in an analysis at a secondary dilution factor

J - Analyte present below the reporting limit

NS - Not sampled

Q - One or more quality control criteria failed.

U - The material was analyzed for, but not detected

µg/L - Micrograms per liter

TABLE B-17

Phase II Background Groundwater Raw Analytical Data

TRDA Remedial Investigation Report

Harvey Point Defense Testing Activity

Hertford, North Carolina

Sample ID	HPDTA-BG-MW01-0514	HPDTA-BG-MW02-0514	HPDTA-BG-MW02D-0514	HPDTA-BG-MW03-0514	HPDTA-BG-MW04-0514
Sample Date	5/9/2014 9:30	5/9/2014 8:35	5/9/2014 8:40	5/9/2014 11:10	5/9/2014 10:20
Chemical Name					
Semivolatile Organic Compounds (UG/L)					
2-Methylnaphthalene	0.09 U	0.09 U	0.09 U	0.09 U	0.09 U
Acenaphthene	0.09 U	0.09 U	0.09 U	0.09 U	0.09 U
Acenaphthylene	0.09 U	0.09 U	0.09 U	0.09 U	0.09 U
Anthracene	0.09 U	0.09 U	0.09 U	0.09 U	0.09 U
Benzo(a)anthracene	0.09 U	0.09 U	0.09 U	0.09 U	0.09 U
Benzo(a)pyrene	0.09 U	0.09 U	0.09 U	0.09 U	0.09 U
Benzo(b)fluoranthene	0.09 U	0.09 U	0.09 U	0.09 U	0.09 U
Benzo(g,h,i)perylene	0.09 U	0.09 U	0.09 U	0.09 U	0.09 U
Benzo(k)fluoranthene	0.09 U	0.09 U	0.09 U	0.09 U	0.09 U
Carbazole	6 U	6 U	6 U	6 U	6 U
Chrysene	0.09 U	0.09 U	0.09 U	0.09 U	0.09 U
Dibenz(a,h)anthracene	0.09 U	0.09 U	0.09 U	0.09 U	0.09 U
Dibenzofuran	3 U	3 U	3 U	3 U	3 U
Fluoranthene	0.09 U	0.09 U	0.09 U	0.09 U	0.09 U
Fluorene	0.09 U	0.09 U	0.09 U	0.09 U	0.09 U
Indeno(1,2,3-cd)pyrene	0.09 U	0.09 U	0.09 U	0.09 U	0.09 U
Naphthalene	0.09 U	0.09 U	0.09 U	0.09 U	0.09 U
Phenanthrene	0.09 U	0.09 U	0.09 U	0.09 U	0.09 U
Pyrene	0.09 U	0.09 U	0.09 U	0.09 U	0.09 U

Notes:

U - The material was analyzed for, but not detected

UG/L - Micrograms per liter

TABLE B-18

Phase II Grab Groundwater Raw Analytical Data - 2nd Street Disposal Area

TRDA Remedial Investigation Report

Harvey Point Defense Testing Activity

Hertford, North Carolina

Sample ID	TR-2ND-GW01-10-14-0116	TR-2ND-GW02-12-16-0116	TR-2ND-GW03-11-15-0116	TR-2ND-GW03-25-29-0116	TR-2ND-GW04-10-14-0116	TR-2ND-GW05-15-19-0116	TR-2ND-GW05-25-29-0116	TR-2ND-GW05D-25-29-0116	TR-2ND-GW06-11-15-0116	TR-2ND-GW07-11-15-0116
Sample Date	1/14/16	1/19/16	1/15/16	1/15/16	1/14/16	1/15/16	1/15/16	1/15/16	1/19/16	1/19/16
Chemical Name										
Volatile Organic Compounds (UG/L)										
1,1,1-Trichloroethane	1 U	0.5 U	1 U	1 U	1 U	1 U	0.5 U	0.5 U	0.5 U	0.5 U
1,1,2,2-Tetrachloroethane	0.4 U	0.2 U	0.4 U	0.4 U	0.4 U	0.4 U	0.2 U	0.2 U	0.2 U	0.2 U
1,1,2-Trichloro-1,2,2-trifluoroethane (Freon-113)	2 U	1 U	2 U	4.22 D	2 U	2 U	1 U	1 U	1 U	1 U
1,1,2-Trichloroethane	0.4 U	0.2 U	0.4 U	0.4 U	0.4 U	0.4 U	0.2 U	0.2 U	0.2 U	0.2 U
1,1-Dichloroethane	1 U	0.5 U	1 U	1 U	1 U	1 U	0.5 U	0.5 U	0.5 U	0.5 U
1,1-Dichloroethene	1 U	0.5 U	1 U	1 U	1 U	1 U	0.5 U	0.5 U	0.5 U	0.5 U
1,2,3-Trichlorobenzene	1 U	0.5 U	1 U	1 U	1 U	1 U	0.5 U	0.5 U	0.5 U	0.5 U
1,2,4-Trichlorobenzene	1 U	0.5 U	1 U	1 U	1 U	1 U	0.5 U	0.5 U	0.5 U	0.5 U
1,2-Dibromo-3-chloropropane	2 U	1 U	2 U	2 U	2 U	2 U	1 U	1 U	1 U	1 U
1,2-Dibromoethane	1 U	0.5 U	1 U	1 U	1 U	1 U	0.5 U	0.5 U	0.5 U	0.5 U
1,2-Dichlorobenzene	1 U	0.5 U	1 U	1 U	1 U	1 U	0.5 U	0.5 U	0.5 U	0.5 U
1,2-Dichloroethane	0.4 U	0.2 U	0.4 U	0.4 U	0.4 U	0.4 U	0.2 U	0.2 U	0.2 U	0.2 U
1,2-Dichloropropane	0.4 U	0.2 U	0.4 U	0.4 U	0.4 U	0.4 U	0.2 U	0.2 U	0.2 U	0.2 U
1,3-Dichlorobenzene	1 U	0.5 U	1 U	1 U	1 U	1 U	0.5 U	0.5 U	0.5 U	0.5 U
1,4-Dichlorobenzene	1 U	0.5 U	1 U	1 U	1 U	1 U	0.5 U	0.5 U	0.5 U	0.5 U
2-Butanone	10 U	5 QU	10 U	10 U	10 U	10 U	5 U	5 U	5 QU	5 QU
2-Hexanone	5 U	2.5 QU	5 U	5 U	5 U	5 U	2.5 U	2.5 U	2.5 QU	2.5 QU
4-Methyl-2-pentanone	5 U	2.5 U	5 U	5 U	5 U	5 U	2.5 U	2.5 U	2.5 U	2.5 U
Acetone	10 QU	12.3 Q	7.91 QDJ	10 QU	10 QU	10 QU	5 QU	5 QU	9.86 QJ	5.57 QJ
Benzene	0.4 U	0.2 U	0.4 U	0.4 U	0.4 U	0.4 U	0.2 U	0.2 U	0.2 U	0.2 U
Bromochloromethane	1 U	0.5 U	1 U	1 U	1 U	1 U	0.5 U	0.5 U	0.5 U	0.5 U
Bromodichloromethane	0.4 U	0.2 U	0.4 U	0.4 U	0.4 U	0.4 U	0.2 U	0.2 U	0.2 U	0.2 U
Bromoform	1 U	0.5 U	1 U	1 U	1 U	1 U	0.5 U	0.5 U	0.5 U	0.5 U
Bromomethane	2 U	1 U	2 U	2 U	2 U	2 U	1 U	1 U	1 U	1 U
Carbon disulfide	1 U	0.5 U	1 U	1 U	1 U	1 U	0.5 U	0.5 U	0.5 U	0.5 U
Carbon tetrachloride	0.4 XU	0.2 U	0.4 XU	0.4 XU	0.4 XU	0.4 XU	0.2 XU	0.2 XU	0.2 U	0.2 U
Chlorobenzene	1 U	0.5 U	1 U	1 U	1 U	1 U	0.5 U	0.5 U	0.5 U	0.5 U
Chloroethane	2 U	1 U	2 U	2 U	2 U	2 U	1 U	1 U	1 U	1 U
Chloroform	1 U	0.5 U	1 U	1 U	1 U	1 U	0.5 U	0.5 U	0.5 U	0.5 U
Chloromethane	1 U	0.5 U	1 U	1 U	1 U	1 U	0.5 U	0.5 U	0.5 U	0.5 U
cis-1,2-Dichloroethene	1 U	0.5 U	1 U	1 U	1 U	1 U	0.5 U	0.5 U	0.5 U	0.5 U
cis-1,3-Dichloropropene	0.4 U	0.2 U	0.4 U	0.4 U	0.4 U	0.4 U	0.2 U	0.2 U	0.2 U	0.2 U
Cyclohexane	1 U	0.5 U	1 U	1 U	1 U	1 U	0.5 U	0.5 U	0.5 U	0.5 U
Dibromochloromethane	0.4 U	0.2 U	0.4 U	0.4 U	0.4 U	0.4 U	0.2 U	0.2 U	0.2 U	0.2 U
Dichlorodifluoromethane (Freon-12)	2 U	1.37 J	2 U	43.3 D	2 U	108 D	35	35.2	1 U	1 U
Ethylbenzene	1 U	0.5 U	1 U	1 U	1 U	1 U	0.5 U	0.5 U	0.5 U	0.5 U
Isopropylbenzene	1 U	0.5 U	1 U	1 U	1 U	1 U	0.5 U	0.5 U	0.338 J	0.5 U
m- and p-Xylene	2 U	1 U	2 U	2 U	2 U	2 U	1 U	1 U	1 U	1 U
Methyl Acetate	2 U	1 U	2 U	2 U	2 U	2 U	1 U	1 U	1 U	1 U
Methylcyclohexane	1 U	0.5 U	1 U	1 U	1 U	1 U	0.5 U	0.5 U	0.5 U	0.5 U
Methylene chloride	2 U	1 U	2 U	2 U	2 U	2 U	1 U	1 U	1 U	1 U
Methyl-tert-Butyl Ether (MTBE)	1 U	0.5 U	1 U	1 U	1 U	1 U	0.5 U	0.5 U	0.5 U	0.5 U
o-Xylene	1 U	0.5 U	1 U	1 U	1 U	1 U	0.5 U	0.5 U	0.5 U	0.5 U
Styrene	1 U	0.5 U	1 U	1 U	1 U	1 U	0.5 U	0.5 U	0.5 U	0.5 U
Tetrachloroethene	0.4 U	0.2 U	0.4 U	0.804 DJ	0.4 U	2.16 D	0.397 J	0.454 J	0.2 U	0.2 U
Toluene	1 U	0.5 U	1 U	1 U	1 U	1 U	0.5 U	0.5 U	0.5 U	0.5 U
trans-1,2-Dichloroethene	1 U	0.5 U	1 U	1 U	1 U	1 U	0.5 U	0.5 U	0.5 U	0.5 U
trans-1,3-Dichloropropene	0.4 U	0.2 U	0.4 U	0.4 U	0.4 U	0.4 U	0.2 U	0.2 U	0.2 U	0.2 U
Trichloroethene	1 U	0.5 U	1 U	1 U	1 U	1 U	0.5 U	0.5 U	0.5 U	0.5 U
Trichlorofluoromethane (Freon-11)	2 U	1 U	2 U	67.3 D	2 U	516 D	144	145	1 U	1 U
Vinyl chloride	1 U	0.5 U	1 U	1 U	1 U	1 U	0.5 U	0.5 U	0.5 U	0.5 U
Xylene, Total	3 U	1.5 U	3 U	3 U	3 U	3 U	1.5 U	1.5 U	1.5 U	1.5 U

Notes:

D - Compound identified in an analysis at a secondary dilution factor.

J - Analyte present. Value may or may not be accurate or precise

Q - The relative percent difference (RPD) and/or percent recovery exceeded limits in the associated Blank Spike and/or Blank Spike Duplicate.

U - The material was analyzed for, but not detected

UG/L - Micrograms per liter

X - The parameter shows a potential positive bias on a reported concentration due to an ICV or CCV exceedance.

TABLE B-18

Phase II Grab Groundwater Raw Analytical Data - 2nd Street Disposal Area

TRDA Remedial Investigation Report

Harvey Point Defense Testing Activity

Hertford, North Carolina

Sample ID	TR-2ND-GW08-11-15-0116	TR-2ND-GW08-25-29-0116	TR-2ND-GW09-12-16-0116	TR-2ND-GW09D-12-16-0116	TR-2ND-GW11-10-14-0116	TR-2ND-GW11-25-29-0116
Sample Date	1/19/16	1/19/16	1/19/16	1/19/16	1/20/16	1/20/16
Chemical Name						
Volatile Organic Compounds (UG/L)						
1,1,1-Trichloroethane	0.5 U	0.5 U	0.5 U	0.5 U	1 U	0.5 U
1,1,2,2-Tetrachloroethane	0.2 U	0.2 U	0.2 U	0.2 U	0.4 U	0.2 U
1,1,2-Trichloro-1,2,2-trifluoroethane (Freon-113)	1 U	10.9	1.09 J	1.51 J	2 U	25.1
1,1,2-Trichloroethane	0.2 U	0.2 U	0.2 U	0.2 U	0.4 U	0.2 U
1,1-Dichloroethane	0.5 U	0.5 U	0.5 U	0.5 U	1 U	0.5 U
1,1-Dichloroethene	0.5 U	0.5 U	0.5 U	0.5 U	1 U	0.5 U
1,2,3-Trichlorobenzene	0.5 U	0.5 U	0.5 U	0.5 U	1 U	0.5 U
1,2,4-Trichlorobenzene	0.5 U	0.5 U	0.5 U	0.5 U	1 U	0.5 U
1,2-Dibromo-3-chloropropane	1 U	1 U	1 U	1 U	2 U	1 U
1,2-Dibromoethane	0.5 U	0.5 U	0.5 U	0.5 U	1 U	0.5 U
1,2-Dichlorobenzene	0.5 U	0.5 U	0.5 U	0.5 U	1 U	0.5 U
1,2-Dichloroethane	0.2 U	0.2 U	0.2 U	0.2 U	0.4 U	0.2 U
1,2-Dichloropropane	0.2 U	0.2 U	0.2 U	0.2 U	0.4 U	0.2 U
1,3-Dichlorobenzene	0.5 U	0.5 U	0.5 U	0.5 U	1 U	0.5 U
1,4-Dichlorobenzene	0.5 U	0.5 U	0.5 U	0.5 U	1 U	0.5 U
2-Butanone	5 QU	5 QU	5 QU	5 QU	10 QU	5 QU
2-Hexanone	2.5 QU	2.5 QU	2.5 QU	2.5 QU	5 QU	2.5 QU
4-Methyl-2-pentanone	2.5 U	2.5 U	2.5 U	2.5 U	5 U	2.5 U
Acetone	5 QU	5 QU	8.72 QJ	11 Q	15 QDJ	5 QU
Benzene	0.2 U	0.2 U	0.2 U	0.2 U	0.4 U	0.2 U
Bromochloromethane	0.5 U	0.5 U	0.5 U	0.5 U	1 U	0.5 U
Bromodichloromethane	0.2 U	0.2 U	0.2 U	0.2 U	0.4 U	0.2 U
Bromoform	0.5 U	0.5 U	0.5 U	0.5 U	1 U	0.5 U
Bromomethane	1 U	1 U	1 U	1 U	2 U	1 U
Carbon disulfide	0.5 U	0.5 U	0.5 U	0.5 U	1 U	0.5 U
Carbon tetrachloride	0.2 U	0.2 U	0.2 U	0.2 U	0.4 U	0.2 U
Chlorobenzene	0.5 U	0.5 U	0.5 U	0.5 U	1 U	0.5 U
Chloroethane	1 U	1 U	1 U	1 U	2 U	1 U
Chloroform	0.5 U	0.5 U	0.5 U	0.5 U	1 U	0.5 U
Chloromethane	0.5 U	0.5 U	0.5 U	0.5 U	1 U	0.5 U
cis-1,2-Dichloroethene	0.5 U	0.5 U	0.5 U	0.5 U	1 U	0.5 U
cis-1,3-Dichloropropene	0.2 U	0.2 U	0.2 U	0.2 U	0.4 U	0.2 U
Cyclohexane	0.5 U	0.5 U	0.5 U	0.5 U	1 U	0.5 U
Dibromochloromethane	0.2 U	0.2 U	0.2 U	0.2 U	0.4 U	0.2 U
Dichlorodifluoromethane (Freon-12)	1 U	68.3	8.53	15	26.6 D	175
Ethylbenzene	0.5 U	0.5 U	0.5 U	0.5 U	1 U	0.5 U
Isopropylbenzene	0.5 U	0.5 U	0.5 U	0.5 U	1 U	0.5 U
m- and p-Xylene	1 U	1 U	1 U	1 U	2 U	1 U
Methyl Acetate	1 U	1 U	1 U	1 U	2 U	1 U
Methylcyclohexane	0.5 U	0.5 U	0.5 U	0.5 U	1 U	0.5 U
Methylene chloride	1 U	1 U	1 U	1 U	2 U	1 U
Methyl-tert-Butyl Ether (MTBE)	0.5 U	0.5 U	0.5 U	0.5 U	1 U	0.5 U
o-Xylene	0.5 U	0.5 U	0.5 U	0.5 U	1 U	0.5 U
Styrene	0.5 U	0.5 U	0.5 U	0.5 U	1 U	0.5 U
Tetrachloroethene	0.2 U	0.348 J	0.2 U	0.2 U	0.4 U	3.18
Toluene	0.5 U	0.5 U	1.81	1.49	1 U	0.5 U
trans-1,2-Dichloroethene	0.5 U	0.5 U	0.5 U	0.5 U	1 U	0.5 U
trans-1,3-Dichloropropene	0.2 U	0.2 U	0.2 U	0.2 U	0.4 U	0.2 U
Trichloroethene	0.5 U	0.5 U	0.5 U	0.5 U	1 U	0.5 U
Trichlorofluoromethane (Freon-11)	1 U	99.5	16.3	28.6	6.2 D	298 D
Vinyl chloride	0.5 U	0.5 U	0.5 U	0.5 U	1 U	0.5 U
Xylene, Total	1.5 U	1.5 U	1.5 U	1.5 U	3 U	1.5 U

Notes:

D - Compound identified in an analysis at a secondary dilution factor.

J - Analyte present. Value may or may not be accurate or precise

Q - The relative percent difference (RPD) and/or percent recovery exceeded limits in the associated Blank Spike and/or Blank Spike Duplicate.

U - The material was analyzed for, but not detected

UG/L - Micrograms per liter

X - The parameter shows a potential positive bias on a reported concentration due to an ICV or CCV exceedance.

TABLE B-19

Phase II Grab Groundwater Raw Analytical Data - 5th Street Disposal Area

TRDA Remedial Investigation Report

Harvey Point Defense Testing Activity

Hertford, North Carolina

Sample ID	TR-5TH-GW01-10-14-0116	TR-5TH-GW01-25-29-0116	TR-5TH-GW02-06-10-0116	TR-5TH-GW02-25-29-0116	TR-5TH-GW03-10-14-0116	TR-5TH-GW03D-10-14-0116	TR-5TH-GW04-06-10-0116	TR-5TH-GW05-06-10-0116	TR-5TH-GW06-10-14-0116	TR-5TH-GW07-10-14-0116	TR-5TH-GW08-10-14-0116
Sample Date	1/12/16	1/12/16	1/12/16	1/12/16	1/12/16	1/12/16	1/12/16	1/12/16	1/12/16	1/12/16	1/13/16
Chemical Name											
Volatile Organic Compounds (UG/L)											
1,1,1-Trichloroethane	1 U	1 U	1 U	1 U	1 U	1 U	1 U	1 U	1 U	1 U	1 U
1,1,2,2-Tetrachloroethane	0.4 U	0.4 U	0.4 U	0.4 U	0.4 U	0.4 U	0.4 U	0.4 U	0.4 U	0.4 U	0.4 U
1,1,2-Trichloro-1,2,2-trifluoroethane (Freon-113)	2 U	2 U	2 U	2 U	2 U	2 U	2 U	2 U	2 U	2 U	2 U
1,1,2-Trichloroethane	0.4 U	0.4 U	0.4 U	0.4 U	0.4 U	0.4 U	0.4 U	0.4 U	0.4 U	0.4 U	0.4 U
1,1-Dichloroethane	1 U	1 U	1 U	1 U	1 U	1 U	1 U	1 U	1 U	1 U	1 U
1,1-Dichloroethene	1 U	1 U	1 U	1 U	1 U	1 U	1 U	1 U	1 U	1 U	1 U
1,2,3-Trichlorobenzene	1 U	0.5 DJB	1 U	1 U	1 U	1 U	1 U	10.8 DB	1 U	1 U	1 U
1,2,4-Trichlorobenzene	1 U	1.24 DJ	1 U	1 U	1 U	1 U	1 U	15.9 D	1 U	1 U	1 U
1,2-Dibromo-3-chloropropane	2 U	2 U	2 U	2 U	2 U	2 U	2 U	2 U	2 U	2 U	2 U
1,2-Dibromoethane	1 U	1 U	1 U	1 U	1 U	1 U	1 U	1 U	1 U	1 U	1 U
1,2-Dichlorobenzene	1 U	0.665 DJ	1 U	1 U	1 U	1 U	1 U	19.1 D	1 U	1.03 DJ	1 U
1,2-Dichloroethane	0.4 U	0.4 U	0.4 U	0.4 U	0.4 U	0.4 U	0.4 U	0.4 U	0.4 U	0.4 U	0.4 U
1,2-Dichloropropane	0.4 U	0.4 U	0.4 U	0.4 U	0.4 U	0.4 U	0.4 U	0.4 U	0.4 U	0.4 U	0.4 U
1,3-Dichlorobenzene	1 U	1 U	1 U	1 U	1 U	1 U	1 U	1 U	1 U	1 U	1 U
1,4-Dichlorobenzene	1 U	0.898 DJ	1 U	1 U	1 U	1 U	1 U	3.46 D	1 U	1 U	1 U
2-Butanone	10 U	10 U	10 U	10 U	10 U	10 U	10 U	10 U	10 U	10 U	10 U
2-Hexanone	5 U	5 U	5 U	5 U	5 U	5 U	5 U	5 U	5 U	5 U	5 U
4-Methyl-2-pentanone	5 U	5 U	5 U	5 U	5 U	5 U	5 U	5 U	5 U	5 U	5 U
Acetone	7.67 DJ	7.42 DJ	9.02 DJ	7.4 DJ	10 U	6.32 DJ	10 U	16.9 DJ	10.7 DJ	10 U	5.74 DJ
Benzene	0.4 U	0.4 U	0.4 U	0.4 U	0.4 U	0.4 U	0.4 U	0.4 U	0.4 U	0.4 U	0.4 U
Bromochloromethane	1 U	1 U	1 U	1 U	1 U	1 U	1 U	1 U	1 U	1 U	1 U
Bromodichloromethane	0.4 U	0.4 U	0.4 U	0.4 U	0.4 U	0.4 U	0.4 U	0.4 U	0.4 U	0.4 U	0.4 U
Bromoform	1 U	1 U	1 U	1 U	1 U	1 U	1 U	1 U	1 U	1 U	1 U
Bromomethane	2 U	2 U	2 U	2 U	2 U	2 U	2 U	2 U	2 U	2 U	2 U
Carbon disulfide	1 U	1 U	1 U	1 U	1 U	1 U	1 U	1 U	1 U	1 U	1 U
Carbon tetrachloride	0.4 U	0.4 U	0.4 U	0.4 U	0.4 U	0.4 U	0.4 U	0.4 U	0.4 U	0.4 U	0.4 XU
Chlorobenzene	1 U	1 U	1 U	1 U	1 U	1 U	1 U	0.909 DJ	1 U	0.515 DJ	1 U
Chloroethane	2 U	2 U	2 U	2 U	2 U	2 U	2 U	2 U	2 U	2 U	2 U
Chloroform	1 U	1 U	1 U	1 U	1 U	1 U	1 U	1 U	1 U	1 U	1 U
Chloromethane	1 U	1 U	1 U	1 U	1 U	1 U	1 U	1 U	1 U	1 U	1 U
cis-1,2-Dichloroethene	1 U	1 U	1 U	1 U	1 U	1 U	1 U	1 U	1 U	1 U	1 U
cis-1,3-Dichloropropene	0.4 U	0.4 U	0.4 U	0.4 U	0.4 U	0.4 U	0.4 U	0.4 U	0.4 U	0.4 U	0.4 U
Cyclohexane	1 U	1 U	1 U	1 U	1 U	1 U	1 U	1 U	1 U	1 U	1 U
Dibromochloromethane	0.4 U	0.4 U	0.4 U	0.4 U	0.4 U	0.4 U	0.4 U	0.4 U	0.4 U	0.4 U	0.4 U
Dichlorodifluoromethane (Freon-12)	2 U	2 U	2 U	2 U	2 U	2 U	2 U	2 U	2 U	16.2 D	2 U
Ethylbenzene	1 U	1 U	1 U	1 U	1 U	1 U	1 U	1 U	1 U	1 U	1 U
Isopropylbenzene	1 U	1 U	1 U	1 U	1 U	1 U	1 U	1 U	1 U	1 U	1 U
m- and p-Xylene	2 U	2 U	2 U	2 U	2 U	2 U	2 U	2 U	2 U	2 U	2 U
Methyl Acetate	2 U	2 U	2 U	2 U	2 U	2 U	2 U	2 U	2 U	2 U	2 U
Methylcyclohexane	1 U	1 U	1 U	1 U	1 U	1 U	1 U	1 U	1 U	1 U	1 U
Methylene chloride	2 U	2 U	2 U	2 U	2 U	2 U	2 U	2 U	2 U	2 U	2 U
Methyl-tert-Butyl Ether (MTBE)	0.709 DJ	2.78 D	1 U	1 U	1 U	1 U	1 U	5.75 D	1 U	1.67 DJ	1 U
o-Xylene	1 U	1 U	1 U	1 U	1 U	1 U	1 U	1 U	1 U	1 U	1 U
Styrene	1 U	1 U	1 U	1 U	1 U	1 U	1 U	1 U	1 U	1 U	1 U
Tetrachloroethene	0.4 U	0.4 U	0.4 U	0.4 U	0.4 U	0.4 U	0.4 U	0.4 U	0.4 U	0.4 U	0.4 U
Toluene	1 U	1 U	1 U	1 U	0.777 DJ	0.567 DJ	1 U	0.696 DJ	1 U	1 U	1 U
trans-1,2-Dichloroethene	1 U	1 U	1 U	1 U	1 U	1 U	1 U	1 U	1 U	1 U	1 U
trans-1,3-Dichloropropene	0.4 U	0.4 U	0.4 U	0.4 U	0.4 U	0.4 U	0.4 U	0.4 U	0.4 U	0.4 U	0.4 U
Trichloroethene	1 U	1 U	1 U	1 U	1 U	1 U	1 U	1 U	1 U	1 U	1 U
Trichlorofluoromethane (Freon-11)	2 U	2 U	2 U	2 U	2 U	2 U	2 U	2 U	2 U	2 U	2 U
Vinyl chloride	1 U	1 U	1 U	1 U	1 U	1 U	1 U	1 U	1 U	1.41 DJ	1 U
Xylene, Total	3 U	3 U	3 U	3 U	3 U	3 U	3 U	3 U	3 U	3 U	3 U

Notes:

B - Analyte also detected in an associated laboratory blank

D - Compound identified in an analysis at a secondary dilution factor.

J - Analyte present. Value may or may not be accurate or precise

Q - The relative percent difference (RPD) and/or percent recovery exceeded limits in the associated Blank Spike and/or Blank Spike Duplicate.

U - The material was analyzed for, but not detected

UG/L - Micrograms per liter

X - The parameter shows a potential positive bias on a reported concentration due to an ICV or CCV exceedance.

TABLE B-19

Phase II Grab Groundwater Raw Analytical Data - 5th Street Disposal Area

TRDA Remedial Investigation Report

Harvey Point Defense Testing Activity

Hertford, North Carolina

Sample ID	TR-5TH-GW08-25-29-0116	TR-5TH-GW08D-25-29-0116	TR-5TH-GW09-04-08-0116	TR-5TH-GW10-10-14-0116	TR-5TH-GW11-10-14-0116	TR-5TH-GW11-25-29-0116	TR-5TH-GW12-25-29-0216	TR-5TH-GW13-05-09-0116	TR-5TH-GW13-25-29-0116	TR-5TH-GW14-25-29-0216	TR-5TH-GW17-25-29-0216
Sample Date	1/13/16	1/13/16	1/13/16	1/13/16	1/14/16	1/13/16	2/4/16	1/14/16	1/14/16	2/4/16	2/3/16
Chemical Name											
Volatile Organic Compounds (UG/L)											
1,1,1-Trichloroethane	0.5 U	0.5 U	1 U	1 U	1 U	0.5 U	1 U	1 XU	2.5 XU	1 U	1 U
1,1,2,2-Tetrachloroethane	0.2 U	0.2 U	0.4 U	0.4 U	0.4 U	0.2 U	0.4 XU	0.4 U	1 U	0.4 XU	0.4 XU
1,1,2-Trichloro-1,2,2-trifluoroethane (Freon-113)	1 U	1 U	2 U	2 U	2 U	1 U	2 U	2 XU	5 XU	2 U	2 U
1,1,2-Trichloroethane	0.2 U	0.2 U	0.4 U	0.4 U	0.4 U	0.2 U	0.4 U	0.4 U	1 U	0.4 U	0.4 U
1,1-Dichloroethane	0.5 U	0.5 U	1 U	1 U	1 U	0.5 U	1 U	1 XU	2.5 XU	1 U	1 U
1,1-Dichloroethene	0.5 U	0.5 U	1 U	1 U	1 U	0.5 U	1 U	1 XU	2.5 XU	1 U	1 U
1,2,3-Trichlorobenzene	0.5 U	0.5 U	1 U	1 U	1 U	0.5 U	5.78 D	1 XU	200 XDB	1 U	3.11 D
1,2,4-Trichlorobenzene	0.5 U	0.5 U	1 U	1 U	1 U	0.5 U	11.6 D	0.713 XDJ	669 XD	1 U	8.75 D
1,2-Dibromo-3-chloropropane	1 U	1 U	2 U	2 U	2 U	1 U	2 U	2 U	5 U	2 U	2 U
1,2-Dibromoethane	0.5 U	0.5 U	1 U	1 U	1 U	0.5 U	1 U	1 XU	2.5 XU	1 U	1 U
1,2-Dichlorobenzene	0.5 U	0.5 U	1 U	1 U	1 U	0.5 U	34.2 D	3.49 XD	204 XD	1 U	8.24 D
1,2-Dichloroethane	0.2 U	0.2 U	0.4 U	0.4 U	0.4 U	0.2 U	0.302 DJ	0.4 XU	1 XU	0.4 U	0.4 U
1,2-Dichloropropane	0.2 U	0.2 U	0.4 U	0.4 U	0.4 U	0.2 U	0.4 U	0.4 U	1 U	0.4 U	0.4 U
1,3-Dichlorobenzene	0.5 U	0.5 U	1 U	1 U	1 U	0.5 U	1.64 DJ	1 U	39.8 D	1 U	1.6 DJ
1,4-Dichlorobenzene	0.5 U	0.5 U	1 U	1 U	1 U	0.5 U	11.3 D	1 U	168 D	1 U	6.28 D
2-Butanone	5 U	5 U	10 U	10 U	10 U	5 U	10 U	10 XU	25 XU	10 U	10 U
2-Hexanone	2.5 U	2.5 U	5 U	5 U	5 U	2.5 U	5 U	5 U	12.5 U	5 U	5 U
4-Methyl-2-pentanone	2.5 U	2.5 U	5 U	5 U	5 U	2.5 U	5 XU	5 XU	12.5 XU	5 XU	5 XU
Acetone	5 U	5 U	10 U	10 U	10 QU	5 U	14.1 DJ	284 XD	25 XU	11.6 DJ	21.3 D
Benzene	0.2 U	0.2 U	0.4 U	0.4 U	0.4 U	0.2 U	0.357 DJ	0.4 U	2.28 DJ	0.4 U	0.498 DJ
Bromochloromethane	0.5 U	0.5 U	1 U	1 U	1 U	0.5 U	1 U	1 XU	2.5 XU	1 U	1 U
Bromodichloromethane	0.2 U	0.2 U	0.4 U	0.4 U	0.4 U	0.2 U	0.4 U	0.4 XU	1 XU	0.4 U	0.4 U
Bromoform	0.5 U	0.5 U	1 U	1 U	1 U	0.5 U	1 U	1 U	2.5 U	1 U	1 U
Bromomethane	1 U	1 U	2 U	2 U	2 U	1 U	2 U	2 U	5 U	2 U	2 U
Carbon disulfide	0.5 U	0.5 U	1 U	1 U	1 U	0.5 U	1 U	1 U	2.5 U	1 U	1 U
Carbon tetrachloride	0.2 XU	0.2 XU	0.4 XU	0.4 XU	0.4 XU	0.2 XU	0.4 U	0.4 XQU	1 XQU	0.4 U	0.4 U
Chlorobenzene	0.5 U	0.5 U	1 U	1 U	1 U	0.5 U	8.61 D	1.26 DJ	24.7 D	1 U	1.51 DJ
Chloroethane	1 U	1 U	2 U	2 U	2 U	1 U	2 U	2 U	5 U	2 U	2 U
Chloroform	0.5 U	0.5 U	1 U	1 U	1 U	0.5 U	1 U	1 XU	2.5 XU	1 U	1 U
Chloromethane	0.5 U	0.5 U	1 U	1 U	1 U	0.5 U	1 U	1 U	2.5 U	1 U	1 U
cis-1,2-Dichloroethene	0.5 U	0.5 U	1 U	1 U	1 U	0.5 U	1 U	1 XU	2.5 XU	1 U	1 U
cis-1,3-Dichloropropene	0.2 U	0.2 U	0.4 U	0.4 U	0.4 U	0.2 U	0.4 U	0.4 XU	1 XU	0.4 U	0.4 U
Cyclohexane	0.5 U	0.5 U	1 U	1 U	1 U	0.5 U	1 U	1 U	2.5 U	1 U	1 U
Dibromochloromethane	0.2 U	0.2 U	0.4 U	0.4 U	0.4 U	0.2 U	0.4 U	0.4 U	1 U	0.4 U	0.4 U
Dichlorodifluoromethane (Freon-12)	1 U	1 U	2 U	2 U	2 U	1 U	2 U	2 XU	5 XU	2 U	2 U
Ethylbenzene	0.5 U	0.5 U	1 U	1 U	1 U	0.5 U	1 U	1 XU	2.5 XU	1 U	1 U
Isopropylbenzene	0.5 U	0.5 U	1 U	1 U	1 U	0.5 U	1 U	1 XU	2.5 XU	1 U	1 U
m- and p-Xylene	1 U	1 U	2 U	2 U	2 U	1 U	2 U	2 XU	5 XU	2 U	2 U
Methyl Acetate	1 U	1 U	2 U	2 U	2 U	1 U	2 U	2 U	5 U	2 U	2 U
Methylcyclohexane	0.5 U	0.5 U	1 U	1 U	1 U	0.5 U	1 U	1 XU	2.5 XU	1 U	1 U
Methylene chloride	1 U	1 U	2 U	2 U	2 U	1 U	2 U	2 U	5 U	2 U	2 U
Methyl-tert-Butyl Ether (MTBE)	6.46	6.06	1 U	1 U	1 U	0.5 U	19.4 D	2.8 XD	552 XD	8.3 D	32.1 D
o-Xylene	0.5 U	0.5 U	1 U	1 U	1 U	0.5 U	1 U	1 XU	2.5 XU	1 U	1 U
Styrene	0.5 U	0.5 U	1 U	1 U	1 U	0.5 U	1 U	1 XU	2.5 XU	1 U	1 U
Tetrachloroethene	0.2 U	0.2 U	0.4 U	0.4 U	0.4 U	0.2 U	0.4 U	0.4 XU	1 XU	0.4 U	0.4 U
Toluene	0.5 U	0.5 U	0.749 DJ	1 U	1.59 DJ	0.5 U	1 U	10.1 D	2.5 U	1 U	1 U
trans-1,2-Dichloroethene	0.5 U	0.5 U	1 U	1 U	1 U	0.5 U	1 U	1 U	2.5 U	1 U	1 U
trans-1,3-Dichloropropene	0.2 U	0.2 U	0.4 U	0.4 U	0.4 U	0.2 U	0.4 U	0.4 U	1 U	0.4 U	0.4 U
Trichloroethene	0.5 U	0.5 U	1 U	1 U	1 U	0.5 U	1 U	1 XU	2.5 XU	1 U	1 U
Trichlorofluoromethane (Freon-11)	1 U	1 U	2 U	2 U	2 U	1 U	2 U	2 XU	5 XU	2 U	2 U
Vinyl chloride	0.5 U	0.5 U	1 U	1 U	1 U	0.5 U	1 U	1 U	2.5 U	1 U	1 U
Xylene, Total	1.5 U	1.5 U	3 U	3 U	3 U	1.5 U	3 U	3 XU	7.5 XU	3 U	3 U

Notes:

B - Analyte also detected in an associated laboratory blank

D - Compound identified in an analysis at a secondary dilution factor.

J - Analyte present. Value may or may not be accurate or precise

Q - The relative percent difference (RPD) and/or percent recovery exceeded limits in the associated Blank Spike and/or Blank Spike Duplicate.

U - The material was analyzed for, but not detected

UG/L - Micrograms per liter

X - The parameter shows a potential positive bias on a reported concentration due to an ICV or CCV exceedance.

TABLE B-20

Phase II Groundwater Raw Analytical Data - 2nd Street Disposal Area

TRDA Remedial Investigation Report

Harvey Point Defense Testing Activity

Hertford, North Carolina

Sample ID	TR-2ND-MW03-0216	TR-2ND-MW03D-0216	TR-2ND-MW04-0216	TR-2ND-MW05-0216	TR-2ND-MW06-0216	TR-2ND-MW07-0216
Sample Date	2/10/16	2/10/16	2/10/16	2/12/16	2/10/16	2/12/16
Chemical Name						
Volatile Organic Compounds (UG/L)						
1,1,2-Trichloro-1,2,2-trifluoroethane (Freon-113)	1 U	1 U	1 U	24.2 D	42.9	3.56 DJ
1,1-Dichloroethane	0.5 U	0.5 U	0.5 U	1 U	0.5 U	1 U
1,1-Dichloroethene	0.5 U	0.5 U	0.5 U	1 U	0.5 U	1 U
1,2,3-Trichlorobenzene	0.5 U	0.5 U	0.5 U	1 U	0.5 U	1 U
1,2,4-Trichlorobenzene	0.5 U	0.5 U	0.5 U	1 U	0.5 U	1 U
1,2-Dichloroethane	0.2 U	0.2 U	0.2 U	0.4 U	0.2 U	0.4 U
Acetone	5 QU	5 QU	5 QU	16.7 DJ	4.54 QJ	14.2 DJ
cis-1,2-Dichloroethene	0.5 U	0.5 U	0.5 U	1 U	0.5 U	1 U
Dichlorodifluoromethane (Freon-12)	86.1	87	4.44	22.7 D	114	41.5 D
Isopropylbenzene	0.5 U	0.5 U	0.5 U	1 U	0.5 U	1 U
Methylene chloride	1 U	1 U	1 U	2 U	1 U	2 U
Methyl-tert-Butyl Ether (MTBE)	0.5 U	0.5 U	0.5 U	1 U	0.5 U	1 U
Tetrachloroethene	3.13 B	3.41 B	0.2 U	0.324 DJ	0.832	0.634 DJ
Toluene	0.493 JB	0.552 JB	0.5 U	1 U	0.5 U	1 U
trans-1,2-Dichloroethene	0.5 U	0.5 U	0.5 U	1 U	0.5 U	1 U
Trichloroethene	0.5 U	0.5 U	0.5 U	1 U	0.5 U	1 U
Trichlorofluoromethane (Freon-11)	325 D	333 D	2.94	53.7 D	199	65.4 D
Vinyl chloride	0.5 U	0.5 U	0.5 U	1 U	0.5 U	1 U
Semivolatile Organic Compounds (UG/L)						
1,4-Dioxane	0.233 U	0.25 U	NS	NS	NS	0.238 U
Bis(2-ethylhexyl)phthalate	0.186 U	0.2 U	0.194 U	0.114 JB	0.186 U	0.348 JB
Explosives (UG/L)						
1,3,5-Trinitrobenzene	0.152 U	0.152 U	0.154 U	0.155 U	0.151 U	0.152 U
1,3-Dinitrobenzene	0.152 U	0.152 U	0.154 U	0.155 U	0.151 U	0.152 U
2,4,6-Trinitrotoluene	0.152 U	0.152 U	0.154 U	0.155 U	0.151 U	0.152 U
2,4-Dinitrotoluene	0.152 U	0.152 U	0.154 U	0.155 U	0.151 U	0.152 U
2,6-Dinitrotoluene	0.152 U	0.152 U	0.154 U	0.155 U	0.151 U	0.152 U
2-Amino-4,6-dinitrotoluene	0.152 QU	0.152 QU	0.154 QU	0.155 QU	0.151 QU	0.152 QU
2-Nitrotoluene	0.152 U	0.152 U	0.154 U	0.155 U	0.151 U	0.152 U
3,5-Dinitroaniline	0.152 U	0.152 U	0.154 U	0.155 U	0.151 U	0.152 U
3-Nitrotoluene	0.152 U	0.152 U	0.154 U	0.155 U	0.151 U	0.14 PJ
4-Amino-2,6-dinitrotoluene	0.152 U	0.152 U	0.154 U	0.155 U	0.151 U	0.152 U
4-Nitrotoluene	0.152 U	0.152 U	0.154 U	0.155 U	0.151 U	0.152 U
HMX	0.152 U	0.152 U	0.154 U	0.155 U	0.151 U	1.26
Nitrobenzene	1.19 P	0.898	0.823 P	0.155 U	0.151 U	0.152 U
Nitroglycerin	0.381 U	0.381 U	0.385 U	0.388 U	0.377 U	0.381 U
Perchlorate	1 U	1 U	1 U	1 U	1 U	1 U
PETN	0.381 U	0.381 U	0.385 U	0.388 U	0.377 U	0.381 U
RDX	0.152 U	0.152 U	0.154 U	0.155 U	0.151 U	3.23
Tetryl	0.152 U	0.152 U	0.154 U	0.155 U	0.151 U	0.152 U
Total Metals (UG/L)						
Antimony	1 U	1 U	1 U	1 U	1 U	1 U
Arsenic	0.914 J	1.5 U	1.5 U	0.828 J	0.772 J	0.758 J
Cobalt	2.39 J	2.52 J	2.03 J	5.08	2.5 U	3.94
Manganese	179	174	121	695 N	91.8	385 N
Zinc	3.42 J	2.88 J	6.11	3.12 J	5.25	5.99
Wet Chemistry (UG/L)						
Alkalinity	91,800	NS	72,100	290,000	64,200	96,200
Ethane	2 U	NS	2 U	2 U	2 U	2 U
Ethene	2 U	NS	2 U	2 U	2 U	2 U
Methane	1.45 J	1.1 J	1.55 J	34.5	1.13 J	243
Nitrate	89.6 J	NS	173 J	100 U	253	100 U
Nitrite	100 U	NS	100 U	100 U	100 U	100 U
Sulfate	23,900	NS	55,800	97,400	38,100	74,900
Sulfide	1790 U	NS	1720 U	1790 U	1820 U	1850 U
Total Organic Carbon (TOC)	2500 U	NS	2500 U	2,880 J	2500 U	3,350
Field Parameters						
Depth to Water from Measuring Point (ft)*	5.02	NS	5.18	1.55	5.57	5.65
Flow Rate (gal/min)	0.13	NS	0.13	0.13	0.13	0.13
Volume Purged (gal)	12.60	NS	11.90	13.20	11.90	12.40
PH (pH)	5.67	NS	5.48	6.06	5.42	5.45
Specific Conductivity (mS/cm)	0.21	NS	0.33	0.68	0.25	0.46
Turbidity (NTU)	1.44	NS	2.06	1.29	2.34	2.82
Dissolved Oxygen (mg/L)	1.04	NS	1.15	8.19	0.98	5.93
Dissolved Oxygen by Chemets (mg/L)	1.00	NS	1.00	1.00	0.80	0.60
Temperature (deg_C)	17.41	NS	17.34	15.70	16.19	15.83
Oxidation Reduction Potential (mV)	95.50	NS	101.60	80.40	129.10	153.60
Ferrous Iron (mg/L)	0.00	NS	0.00	0.00	0.00	0.00

Notes:

B - Analyte also detected in an associated laboratory blank

D - Compound identified in an analysis at a secondary dilution factor.

J - Analyte present. Value may or may not be accurate or precise

N - The MS/MSD accuracy and/or precision are outside criteria

NS - Not sampled

P - Estimated result. There is greater than a 40% difference between the two GC columns for the detected concentrations.

Q -The relative percent difference (RPD) and/or percent recovery exceeded limits in the associated Blank Spike and/or Blank Spike Duplicate.

U - The material was analyzed for, but not detected

mg/L - Milligrams per liter

UG/L - Micrograms per liter

deg_C - Degrees centigrade

ft - Feet

gal/min - Gallons per minute

gal - gallons

mS/cm - Millisiemens per centimeter

mV - Millivolts

NTU - Nephlometric turbitiy unit

pH - PH units

* -Indicates value from just before sample collection

TABLE B-21

Phase II Groundwater Raw Analytical Data - 5th Street Disposal Area

TRDA Remedial Investigation Report

Harvey Point Defense Testing Activity

Hertford, North Carolina

Sample ID	TR-5TH-MW02-0216	TR-5TH-MW02D-0216	TR-5TH-MW03-0216	TR-5TH-MW04-0216	TR-5TH-MW05-0216	TR-5TH-MW06-0216	TR-5TH-MW07-0216
Sample Date	2/11/16	2/11/16	2/9/16	2/16/16	2/11/16	2/11/16	2/11/16
Chemical Name							
Volatile Organic Compounds (UG/L)							
1,1-Dichloroethene	1 U	1 U	1 U	1 U	1 U	1 U	1 U
1,2,3-Trichlorobenzene	4.33 D	4 D	1 U	0.974 DJ	195 D	2.08 D	1 U
1,2,4-Trichlorobenzene	12.6 D	11.8 D	0.625 DJ	2.7 D	588 DB	6.33 D	1 U
1,2-Dichlorobenzene	9.35 D	8.58 D	1 U	1.28 DJ	182 D	5.16 D	1 U
1,2-Dichloroethane	0.4 U	0.4 U	0.4 U	0.4 U	0.288 DJ	0.4 U	0.4 U
1,3-Dichlorobenzene	0.713 DJ	0.634 DJ	1 U	1 U	39.8 D	1 U	1 U
1,4-Dichlorobenzene	4.06 D	3.74 D	1 U	2.17 D	173 D	1.37 DJ	1 U
Acetone	14.5 DJ	15.7 DJ	6.09 QDJ	15.2 DJ	23.4 D	11.5 DJ	14.1 DJ
Benzene	0.4 U	0.4 U	0.4 U	0.4 U	2.09 D	0.4 U	0.4 U
Chlorobenzene	1.77 DJ	1.63 DJ	1 U	1 U	29.3 D	0.765 DJ	1 U
cis-1,2-Dichloroethene	1 U	1 U	1 U	1.08 DJ	1 U	1 U	1 U
Dichlorodifluoromethane (Freon-12)	2 U	2 U	2 U	2 U	2 U	2 U	2 U
Isopropylbenzene	1 U	1 U	1 U	1 U	0.65 DJ	1 U	1 U
Methylene chloride	2 U	2 U	2 U	2 U	2 U	2 U	2 U
Methyl-tert-Butyl Ether (MTBE)	3.77 D	3.23 D	1.11 DJ	1.41 DJ	345 D	86.1 D	1 U
Tetrachloroethene	0.4 U	0.4 U	1.92 DB	0.4 U	0.4 U	0.4 U	0.4 U
Toluene	1 U	1 U	0.971 DJB	0.66 DJ	1 U	1 U	1 U
trans-1,2-Dichloroethene	1 U	1 U	1 U	1 U	1 U	1 U	1 U
Trichloroethene	1 U	1 U	1 U	1 U	1 U	1 U	1 U
Trichlorofluoromethane (Freon-11)	2 U	2 U	2 U	2 U	2 U	2 U	2 U
Vinyl chloride	1.3 DJ	1.25 DJ	1 U	1 U	1 U	1 U	1 U
Semivolatile Organic Compounds (UG/L)							
1,4-Dioxane	0.245 U	0.24 U	NS	NS	0.26 J	NS	NS
Anthracene	0.098 U	0.0962 U	0.093 U	0.0962 U	0.0663 J	0.098 U	0.0952 U
Bis(2-ethylhexyl)phthalate	0.166 J	0.142 J	0.114 JB	0.126 JB	0.384 J	0.146 J	0.101 J
Fluorene	0.098 U	0.0962 U	0.093 U	0.0962 U	0.066 J	0.098 U	0.0952 U
Naphthalene	0.098 U	0.0962 U	0.093 U	0.0962 U	0.0575 J	0.098 U	0.0952 U
Total Metals (UG/L)							
Arsenic	1.5 U	1.5 U	1.56 J	1.58 J	1.5 U	1.5 U	1.5 U
Barium	26.3	26	29.3	50.8	51.1	39.5	51
Beryllium	0.5 U	0.5 U	0.5 U	0.5 U	0.5 U	0.5 U	0.5 U
Chromium	0.938 J	0.873 J	1.16 J	0.597 J	1 U	1.78 J	0.9 J
Cobalt	9.98	10	8.21	20.9	6.56	9.04	11.9
Copper	2 U	2 U	2 U	2 U	2 U	2 U	2 U
Iron	270 Q	243 Q	615 Q	486	114 Q	681 Q	142 Q
Lead	0.75 U	0.75 U	0.521 J	0.75 U	0.75 U	0.52 J	0.75 U
Manganese	473	480	489	902	210	472	1,330
Nickel	2.64	2.67	2.28 J	4.69	3.88	3.59	3.39
Vanadium	1.83 J	1.71 J	2.35 J	1.32 J	2.5 U	2.95 J	2.5 U
Zinc	1.57 J	1.4 J	6.28 Q	5.34	7	8.33	2.72 J
Wet Chemistry (UG/L)							
Alkalinity	107,000	NS	72,100	139,000	69,100	71,200	162,000
Ethane	2 U	NS	2 U	2 U	2 U	2 U	2 U
Ethene	2 U	NS	2 U	2 U	2 U	2 U	2 U
Methane	253	56.2	6.28	12.3	21.1	1.07 J	17.7
Nitrate	100 U	NS	339	100 U	100 U	56.6 J	100 U
Nitrite	100 U	NS	89.9 J	100 U	100 U	100 U	100 U
Sulfate	38,000	NS	39,400	54,100	117,000	66,300	158,000
Sulfide	1850 U	NS	1720 U	1790 U	1790 U	1820 U	1670 U
Total Organic Carbon (TOC)	3,090	NS	2,970 J	2,820 J	2,680 J	2,400 J	3,130
Field Parameters							
Depth to Water from Measuring Point (ft)*	5.27	NS	2.64	4.60	5.60	3.65	3.26
Flow Rate (gal/min)	0.13	NS	0.13	0.13	0.13	0.13	0.13
Volume Purged (gal)	12.70	NS	12.80	12.70	12.90	11.20	12.60
PH (pH)	5.92	NS	5.82	5.81	5.47	5.52	5.98
Specific Conductivity (mS/cm)	0.30	NS	0.26	0.43	0.47	0.31	0.63
Turbidity (NTU)	7.26	NS	3.63	2.91	1.67	2.86	2.12
Dissolved Oxygen (mg/L)	1.58	NS		4.23	3.09	1.89	4.73
Dissolved Oxygen by Chemets (mg/L)	1.00	NS	0.80	1.00	0.60	0.80	1.00
Temperature (deg_C)	16.94	NS	18.00	16.56	16.17	17.11	17.45
Oxidation Reduction Potential (mV)	103.30	NS	70.10	79.50	133.80	129.50	84.90
Ferrous Iron (mg/L)	0.00	NS	0.00	0.00	0.00	0.00	0.00

Notes:

B - Analyte also detected in an associated laboratory blank

D - Compound identified in an analysis at a secondary dilution factor.

J - Analyte present. Value may or may not be accurate or precise

N - The MS/MSD accuracy and/or precision are outside criteria

NS - Not sampled

P - Estimated result. There is greater than a 40% difference between the two GC columns for the detected concentrations.

Q -The relative percent difference (RPD) and/or percent recovery exceeded limits in the associated Blank Spike and/or Blank Spike Duplicate.

U - The material was analyzed for, but not detected

mg/L - Milligrams per liter

UG/L - Micrograms per liter

deg_C - Degrees centigrade

ft - Feet

gal/min - Gallons per minute

gal - gallons

mS/cm - Millisiemens per centimeter

mV - Millivolts

NTU - Nephlometric turbitiy unit

pH - PH units

* -Indicates value from just before sample collection

Attachment C
Topographic Surveys

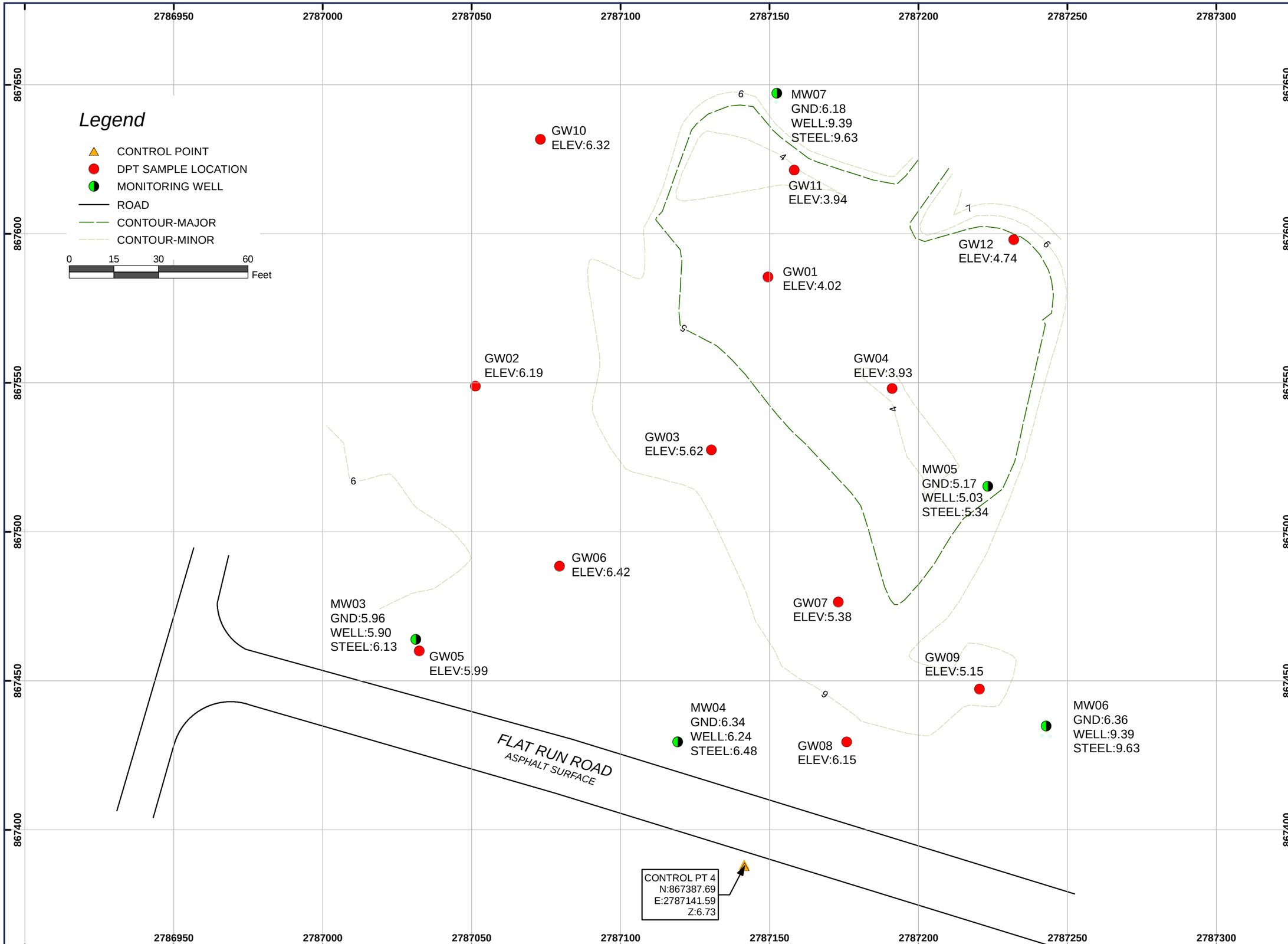

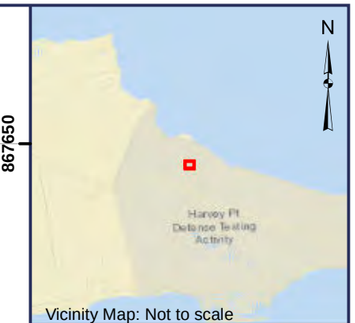

Vicinity Map: Not to scale

"I, Seth F. Martin, certify that this project was completed under my direct and responsible charge from an actual ground survey made under my supervision; that the original data was obtained on February 17, 2016; and all coordinates are based on NC State Plane, NAD83"

NORTH CAROLINA PROFESSIONAL SEAL L-4719 LAND SURVEYOR SETH F. MARTIN

LDSI, Inc.
508 West 5th Street
Charlotte, NC 28202
(704) 337-8329
www.ldsi-inc.com

SCALE: 1 in = 30 ft
DATUM: NC State Plane, NAD83
VERTICAL DATUM: NAVD88
PROJECT NO: 41 15140
MAP BY: belliott
DATE: 3/9/2016-PAGE 1 OF 1

TRDA (2nd Street Disposal Area)

TOPOGRAPHIC SURVEY

HPDTA

PERQUIMANS COUNTY, NC

Client: CH2M Hill

Path: G:\41 15140\GIS\Maps\11x17\5140MW2.mxd

SUE GIS SURVEYING LDSI

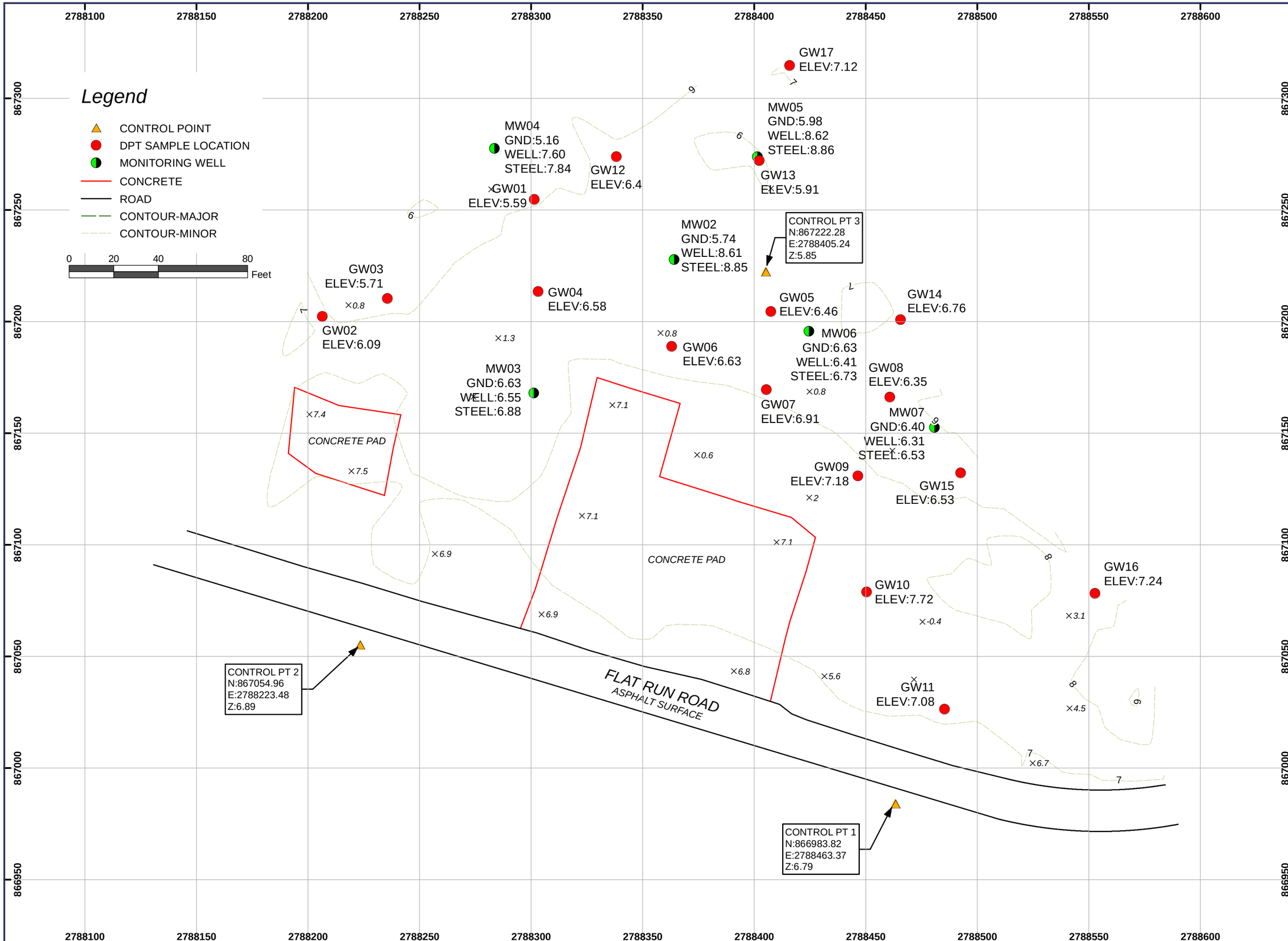

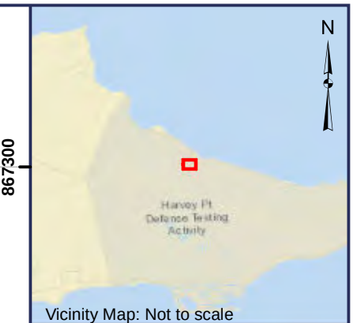

Vicinity Map: Not to scale

"I, Seth F. Martin, certify that this project was completed under my direct and responsible charge from an actual ground survey made under my supervision; that the original data was obtained on February 17, 2016; and all coordinates are based on NC State Plane, NAD83"

NORTH CAROLINA PROFESSIONAL SEAL L-4719 LAND SURVEYOR SETH F. MARTIN

LDSI, Inc.
508 West 5th Street
Charlotte, NC 28202
(704) 337-8329
www.ldsi-inc.com

SCALE: 1 in = 40 ft
DATUM: NC State Plane, NAD83
VERTICAL DATUM: NAVD88
PROJECT NO: 4151 40
MAP BY: belliott
DATE: 3/9/2016-PAGE 1 OF 1

TRDA (5th Street Disposal Area)

TOPOGRAPHIC SURVEY

HPDTA

PERQUIMANS COUNTY, NC

Client: CH2M Hill

Path: G:\4151 40\GIS\Maps\11x17\5140MW.mxd

Attachment D
Laboratory Reports

Attachment D Laboratory Reports is provided on the attached CD.