****
* THIS CORRECTED PAGE SHOULD REPLACE THE ORIGINAL PAGE vi. *
* THE CORRECTION IS UNDERLINED IN THE TEXT BELOW. *
****

ABSTRACT

The owner or operator of a landfill, or a surface impoundment closed as a landfill, must meet the closure requirements specified under 40 CFR 264.310 (permitted units) or 40 CFR 265.310 (interim status units).

This guidance document addresses landfill covers and recommends a multilayer final cover design that includes the following elements, from top to bottom:

- a top layer consisting of two components: (1) a vegetated or armored surface component, either of which is selected to minimize erosion and, to the extent possible, promote drainage off the cover, and (2) a soil component with a minimum thickness of 60 cm [24 in.] comprised of topsoil and/or fill soil as appropriate, the surface of which slopes uniformly at least 3 percent but not more than 5 percent;

- a soil drainage layer with a minimum thickness of 30 cm (12 in.) and a minimum hydraulic conductivity of 1×10^{-2} cm/sec that will effectively minimize water infiltration into the low-permeability layer, and a final bottom slope of at least 3 percent after settlement and subsidence; or the drainage layer may consist of geosynthetic materials with equivalent performance characteristics; the drainage layer also serves as a protective cover for the flexible membrane liner (FML) component of the underlying low-permeability layer;

- a two-component low-permeability layer, that limits water infiltration into the underlying wastes to a rate less than or equal to the rate of leachate migration out of the bottom liner system and consists of (1) a 20-mil minimum thickness [or greater depending on the material and design] FML component and (2) a 60-cm [24-inch] minimum thickness compacted soil component with an in-place saturated hydraulic conductivity of <u>1×10^{-7} cm/sec or less</u>. (NOTE: The requirement for FMLs in the cover are for all permitted units and interim status units with an FML in the bottom. For interim status units with only a clay bottom liner, an FML may not be required.)

For units w/ organics > 1 ppm
+ metals > 10x DWS,
a full RCRA cap is required

Reduced cap is ↓ (waste removed)
Otherwise, the cap should be constructed as follows:

1) grass

2) top soil

fabric to prevent sand drain from clogging

3) sand layer for drainage ⟶ (w/drains)

4) 1 foot of clay w/ $K \leq 1.0E-7$ cm/sec or
a geo-composite layer (eg. claymax)

5) fill as necessary for grade

United States
Environmental Protection
Agency

Office of Solid Waste and
Emergency Response
Washington DC 20460

EPA/530-SW-89-047
July 1989

PA

Technical Guidance Document:

Final Covers on Hazardous Waste Landfills and Surface Impoundments

EPA/530-SW-89-047
July 1989

TECHNICAL GUIDANCE DOCUMENT

FINAL COVERS ON HAZARDOUS WASTE LANDFILLS AND SURFACE IMPOUNDMENTS

Office of Solid Waste and Emergency Response
U.S. Environmental Protection Agency
Washington, DC 20460

In cooperation with

RISK REDUCTION ENGINEERING LABORATORY
OFFICE OF RESEARCH AND DEVELOPMENT
U.S. ENVIRONMENTAL PROTECTION AGENCY
CINCINNATI, OHIO 45268

DISCLAIMER

The preparation of this document has been funded wholly by the United States Environmental Protection Agency. It has been subjected to the Agency's peer and admininistrative review, and it has been approved for publication as an EPA document. Mention of trade names or commercial products does not constitute endorsement or recommendation for use.

FOREWORD

Today's rapidly developing and changing technologies and industrial products and practices frequently carry with them the increased generation of solid and hazardous wastes. These materials, if improperly dealt with, can threaten both public health and the environment. Abandoned waste sites and accidental releases of toxic and hazardous substances to the environment also have important environmental and public health implications. The Risk Reduction Engineering Laboratory assists in providing an authoritative and defensible engineering basis for assessing and solving these problems. Its products support the policies, programs, and regulations of the U.S. Environmental Protection Agency; the permitting and other responsibilities of State and local governments; and the needs of both large and small businesses in handling their wastes responsibility and economically.

This document provides design guidance on final cover systems for hazardous waste landfills and surface impoundments. We believe that the final cover, if properly designed and constructed, can provide long-term protection of the unit from moisture infiltration due to precipitation. The cover system presented herein is a multilayer design consisting of a vegetated top layer, drainage layer, and low-permeability layer. Optional layers which may be required for site-specific conditions are also discussed. Rationale is provided for the design parameters to give designers and permit writers background information and an understanding of cover systems.

This document is intended for use by organizations involved in permitting, designing, and constructing hazardous waste land disposal facilities.

E. Timothy Oppelt, Director
Risk Reduction Engineering Laboratory

FOREWORD

Today's rapidly developing and changing technologies and industrial products and practices frequently carry with them the increased generation of solid and hazardous wastes. These materials, if improperly dealt with, can threaten both public health and the environment. Abandoned waste sites and accidental releases of toxic and hazardous substances to the environment also have important environmental and public health implications. The Risk Reduction Engineering Laboratory assists in providing an authoritative and defensible engineering basis for assessing and solving these problems. Its products support the policies, programs, and regulations of the U.S. Environmental Protection Agency; the permitting and other responsibilities of State and local governments; and the needs of both large and small businesses in handling their wastes responsibility and economically.

This document provides design guidance on final cover systems for hazardous waste landfills and surface impoundments. We believe that the final cover, if properly designed and constructed, can provide long-term protection of the unit from moisture infiltration due to precipitation. The cover system presented herein is a multilayer design consisting of a vegetated top layer, drainage layer, and low-permeability layer. Optional layers which may be required for site-specific conditions are also discussed. Rationale is provided for the design parameters to give designers and permit writers background information and an understanding of cover systems.

This document is intended for use by organizations involved in permitting, designing, and constructing hazardous waste land disposal facilities.

E. Timothy Oppelt, Director
Risk Reduction Engineering Laboratory

PREFACE

Subtitle C of the Resource Conservation and Recovery Act (RCRA) requires the U.S. Environmental Protection Agency (EPA) to establish a Federal hazardous waste management program. This program must ensure that hazardous wastes are handled safely from generation until final disposition. EPA issued a series of hazardous waste regulations under Subtitle C of RCRA that are published in Title 40 Code of Federal Regulations (40 CFR). The principal 40 CFR Part 264 and 265 regulations were issued on July 26, 1982 for treatment, storage, and disposal (TSD) facilities and establish performance standards for hazardous waste landfills, surface impoundments, land treatment units, and waste piles. The regulations have been amended several times since then.

In support of the regulations, EPA has been developing three types of documents to assist preparers and reviewers of RCRA permit applications for hazardous waste TSD facilities. These include RCRA Technical Guidance Documents, Permit Guidance Manuals, and Technical Resource Documents (TRDs).

RCRA Technical Guidance Documents, such as this one, present design and operating parameters or design evaluation techniques that generally comply with, or demonstrate compliance with, the Design and Operating Requirements and the Closure and Post-Closure Requirements of 40 CFR Part 264.

The Permit Guidance Manuals are being developed to describe the permit application information the Agency seeks, and to provide guidance to applicants and permit writers in addressing information requirements. These manuals will include a discussion of each set of specifications that must be considered for inclusion in the permit.

The Technical Resource Documents present summaries of state-of-the-art technologies and evaluation techniques determined by the Agency to constitute good engineering designs, practices, and procedures. They support the RCRA Technical Guidance Documents and Permit Guidance Manuals in certain areas (i.e., liners, leachate management, final covers, and water balance) by describing current technologies and methods for designing hazardous waste facilities, or for evaluating the performance of a facility design. Although emphasis is given to hazardous waste facilities, the information presented in these TRDs may be used

for designing and operating nonhazardous waste TSD facilities as well. Whereas the RCRA Technical Guidance Documents and Permit Guidance Manuals are directly related to the regulations, the information in these TRDs covers a broader perspective and should not be used to interpret the requirements of the regulations.

This document is a Technical Guidance Document prepared by the Risk Reduction Engineering Laboratory of EPA's Office of Research and Development in cooperation with the Office of Solid Waste and Emergency Response. The document has undergone extensive technical review and has been revised accordingly. With the issuance of this document, all previous drafts are obsolete and should be discarded.

Comments are welcome at any time on the accuracy and usefulness of the information in this document. Comments will be evaluated, and suggestions will be incorporated, wherever feasible, before publication of any future revisions. Written comments should be addressed to EPA RCRA Docket (OS-305), 401 M Street S.W., Washington, DC 20460. The document for which comments are being provided should be identified by title and number.

ABSTRACT

The owner or operator of a landfill, or a surface impoundment closed as a landfill, must meet the closure requirements specified under 40 CFR 264.310 (permitted units) or 40 CFR 265.310 (interim status units).

This guidance document addresses landfill covers and recommends a multilayer final cover design that includes the following elements, from top to bottom:

- a top layer consisting of two components: (1) a vegetated or armored surface component, either of which is selected to minimize erosion and, to the extent possible, promote drainage off the cover, and (2) a soil component with a minimum thickness of 60 cm [24 in.] comprised of topsoil and/or fill soil as appropriate, the surface of which slopes uniformly at least 3 percent but not more than 5 percent;

- a soil drainage layer with a minimum thickness of 30 cm (12 in.) and a minimum hydraulic conductivity of 1×10^{-2} cm/sec that will effectively minimize water infiltration into the low-permeability layer, and a final bottom slope of at least 3 percent after settlement and subsidence; or the drainage layer may consist of geosynthetic materials with equivalent performance characteristics; the drainage layer also serves as a protective cover for the flexible membrane liner (FML) component of the underlying low-permeability layer;

- a two-component low-permeability layer, that limits water infiltration into the underlying wastes to a rate less than or equal to the rate of leachate migration out of the bottom liner system and consists of (1) a 20-mil minimum thickness [or greater depending on the material and design] FML component and (2) a 60-cm [24-inch] minimum thickness compacted soil component with an in-place saturated hydraulic conductivity [redacted] less than 1×10^{-7} cm/sec. (NOTE: The requirement for FMLs in the cover are for all permitted units and interim status units with an FML in the bottom. For interim status units with only a clay bottom liner, an FML may not be required.)

Optional layers that may be used on a site-specific basis include (1) a gas vent layer to remove gases produced within the wastes, and/or (2) a biotic barrier layer to protect the cover from animal or plant intrusion.

The Agency recommends a detailed construction quality assurance (CQA) program for each layer of the final cover system. CQA records should document quality and demonstrate compliance with plans and specifications. The cover design process must consider many site-specific factors, such as precipitation, construction materials, freeze-thaw phenomena, waste characteristics, potential subsidence, and other environmental factors.

CONTENTS

Disclaimer ii
Foreword iii
Preface. iv
Abstract vi
Figures. x
Tables xi
Acknowledgment xii

1. Introduction. 1

1.1 Purpose. 1
1.2 Closure and Post-Closure Regulations 1
1.3 Liquids Management Strategy. 4
1.4 General Cover System Recommendations 5

1.4.1 Design Recommendations. 5
1.4.2 Construction Quality Assurance. 8
1.4.3 Settlement and Subsidence 8

2. Top Layer 11

2.1 Design 11
2.2 Discussion 12

2.2.1 Upper Component of Top Layer. 12

2.2.1.1 Vegetation 13
2.2.1.2 Other Erosion-Impeding Materials . 13

2.2.2 Lower Component of Top Layer. 14

3. Drainage Layer. 16

3.1 Design 16
3.2 Discussion 18

4. Low-Permeability Layer. 22

4.1 Design 23
4.2 Discussion 24

4.2.1 FML Component 25
4.2.2 Low-Permeability Compacted Soil Component . 27

CONTENTS (continued)

5. Optional Layers 31

5.1 Gas Vent Layer 31

5.1.1 Design. 31
5.1.2 Discussion 32

5.2 Biotic Barrier Layer 33

5.2.1 Design. 33
5.2.2 Discussion. 34

References. 36

FIGURES

Number		Page
1.	EPA-recommended cover design.	6
2.	EPA-recommended cover design with optional layers . . .	7
3a.	Cover with sand drainage layer.	17
3b.	Cover with geogrid drainage layer	17
4.	Cover and liner edge configuration with example . . . . toe drain.	19
5.	Detail of FML/soil composite low-permeability layer . .	22
6.	Regional depth of frost penetration	30
7.	Cover with gas vent and vent layer	31

TABLES

Number Page

1. Closure and Post-Closure Regulatory Requirements 3
2. Synopsis of Minimum Technology Guidance for Covers . . . 9

ACKNOWLEDGMENT

The EPA Project Manager who directed the draft preparation of this document was Les Otte with the assistance of Ana Aviles, both of the Environmental Protection Agency's Office of Solid Waste, Land Disposal Branch. Early drafts of the document were prepared by David C. Anderson of K. W. Brown & Associates, Inc. Later drafts were prepared by Jeffrey D. Magaw, Charles W. Young, and Clay Spears of Alliance Technologies Corporation. This draft has been prepared by Robert P. Hartley of EPA's Risk Reduction Engineering Laboratory, after peer reviews by Dr. Gordon Boutwell of Soil Testing Engineers, Inc.; Dr. Richard C. Warner, University of Kentucky; Leo Overman of Golder Associates, Inc.; Dirk Brunner of E. C. Jordan, Inc.; the Solid and Hazardous Waste Management Committee of the American Society of Civil Engineers, Environmental Engineering Division; and by various members of the EPA's Risk Reduction Engineering Laboratory.

1. INTRODUCTION

1.1 PURPOSE

This document provides design guidance on final covers for hazardous waste units. The recommended design satisfies the requirements of 40 CFR 264 and 265 Subparts G (closure and post-closure), K (surface impoundments), and N (landfills). The Environmental Protection Agency (hereafter referred to as "the Agency") emphasizes that recommendations are guidance only and not regulations. The Agency acknowledges that other final cover designs may be acceptable, depending upon site-specific conditions and upon a determination by the Agency that an alternative design adequately fulfills the regulatory requirements. It is, however, the responsibility of the facility owner or operator to prove that the alternate design will provide a level of performance that is at least equivalent to that of the final cover system described in this document.

The Agency's liquids management strategy for landfills, and the role that final covers serve in that strategy, are outlined in general terms for background. Regulatory requirements for landfill and surface impoundment covers are also outlined, as well as differences in requirements between interim status and permitted units. The Agency-recommended final cover system design is presented in detail, as well as considerations for construction quality assurance. Attention is given to erosion, settlement, and subsidence, and their potential cover-damaging effects.

A separate section of this document is devoted to the design details of each layer of the recommended cover. A discussion of the rationale for the recommended specifications is included.

1.2 CLOSURE AND POST-CLOSURE REGULATIONS

All of the regulations dealing with hazardous waste landfill and surface impoundment cover requirements are found in Title 40, Parts 264 and 265, of the Code of Federal Regulations (40 CFR 264 and 40 CFR 265). Part 264 deals with permitted facilities and Part 265 with interim status facilities. Interim status facilities are, in general, those facilities that were in existence on November 19, 1980. Three Subparts of each of Parts 264 and 265 deal with general closure requirements: Subpart G - Closure and Post-Closure; Subpart K - Surface Impoundments; and

Subpart N - Landfills. Each Subpart contains several sections important to cover planning, design, and construction, as outlined in Table 1.

There are few difference between permitted and interim status unit closure and post-closure regulations under Subpart G of Parts 264 and 265. The major difference is that, for interim status units, public notice for changes to the approved closure and post-closure plans is not required. Changes to plans for permitted units require permit modifications which, in turn, require public notice and comment.

There are three significant differences between permitted and interim status unit final cover regulations under Subparts K and N of Parts 264 and 265. Part 264.303 requires monitoring and inspection to ensure that synthetic and soil materials used in the cover are watertight and structurally uniform. Such a requirement was not included in Part 265 for interim status units. The Agency recommends that a Construction Quality Assurance (CQA) program, establishing inspection activities, be utilized for covers being built at both permitted and interim status units. The Agency believes that a site-specific CQA inspection program is necessary to ensure that cover design specifications are met.

A second difference in requirements is that, while leachate collection and removal activities are required after closure under 40 CFR 264.310, for permitted units, they are not required under Part 265 for interim status units. The absence of a stated post-closure leachate collection and removal requirement makes cover performance for interim status units even more important. It should be noted that, under the broader performance standards of 40 CFR 265.111, the Agency may still require leachate collection during post-closure at an interim site.

The third, and perhaps most significant, difference is in the requirements of 40 CFR 264.310(b)(1)(v) and 40 CFR 265.310 (b)(1)(v). These subsections require that the cover have a permeability less than or equal to any bottom liner or natural subsoil present. For interim status units, without an engineered liner, the cover could presumably be of relatively permeable materials. But here again, the Agency may impose the standards of 40 CFR 265.111, and require a more impermeable cover.

For permitted landfills, to meet the requirements of 40 CFR 264.310, the cover must have a permeability no greater than that of the double liner required under 40 CFR 264.301(c). The Agency does not consider this to mean that the final cover for a permitted unit must actually contain a double liner. Rather, the Agency recommends that the final cover include a layer whose liquid-rejection performance is equal to or better than the

Table 1. Closure and Post-Closure Regulatory Requirements

Section	Part 264	Part 265
	Subpart G - Closure and Post-Closure	
111	Closure performance standard.	Closure performance standard.
112	Closure plan; amendment of plan.	Closure plan; amendment of plan.
113	Time allowed for closure.	Time allowed for closure.
115	Certification of closure.	Certification of closure.
116	Survey plat.	Survey plat.
117	Post-closure care.	Post-closure care.
118	Post-closure plan; amendment of plan.	Post-closure plan; amendment of plan.
120	Certificate of completion of postclosure care.	Certificate of completion of post-closure care.
	Subpart K - Surface Impoundments	
226	Monitoring and inspection.	Inspections.
228	Closure and post-closure care.	Closure and post-closure care.
	Subpart N - Landfills	
301	Design and operating requirements.	Design requirements.
302	N/A	General operating requirements.
303	Monitoring and inspection.	N/A
310	Closure and post-closure care.	Closure and post-closure care.

bottom composite liner (flexible membrane liner [FML] underlain, and in full contact with, compacted soil) of the double-liner system detailed in the "Minimum Technology Guidance on Double Liner Systems for Landfills and Surface Impoundments - Design, Construction and Operation" (EPA, 1987i). The Agency-recommended design for the cover does, in fact, include a composite barrier layer as outlined in Section 4. In all cases where a FML is used in the bottom liner, one should also be used in the cover. This does not mean, however, that the Agency necessarily recommends the use of exactly the same barrier materials in both the liner and cover. For example, different FML materials of equivalent performance may be used, such as high density polyethylene for the bottom liner and polyvinyl chloride in the cover.

The Agency also recommends using the composite FML/clay barrier in interim status unit covers. However, for interim status units, compacted clay with a permeability equal to or less than 1×10^{-7} cm/sec may be used without a FML if the clay is less permeable than the landfill bottom liner or natural subsoil beneath the site. While 40 CFR 265.310(a)(5) might allow a less effective design, we believe the long-term protection from infiltration provided by the recommended cover design justifies its use for all units. With the Agency-recommended composite design, it is more certain that the cover will be no more permeable than the bottom of the unit. In addition, the installation of the composite design on interim status units takes advantage of the practical opportunity to more effectively minimize water infiltration, leachate generation, and leachate migration.

1.3 LIQUIDS MANAGEMENT STRATEGY

The general closure performance standards are specified in 40 CFR 264.111 and 265.111 (Subpart G) for permitted and interim hazardous waste disposal facilities, respectively. The standards state that:

"The owner or operator must close the facility in a manner that:

a. Minimizes the need for further maintenance; and

b. Controls, minimizes, or eliminates, to the extent necessary to protect human health and the environment, post-closure escape of hazardous waste, hazardous constituents, leachate, contaminated runoff, or hazardous waste decomposition products to the ground or surface waters or to the atmosphere . . "

The requirements apply to hazardous waste landfills and to hazardous waste surface impoundments closed as landfills.

Landfill closure requirements are based on a two-part liquids management strategy of (1) minimizing the leachate generation by keeping liquids out of the unit, and (2) detecting, collecting, and removing leachate within the unit. Closure requirements are specified in 40 CFR 264.310 and 40 CFR 265.310 and include a final cover and post-closure care.

The Agency considers keeping water out of the unit to be the prime element of the strategy. Thus, the Agency believes that a properly designed and constructed cover becomes, after closure, the most important feature of the landfill structure. The Agency requires that the cover be designed and constructed to provide long-term minimization of the movement of water from the surface into the closed unit. Where the waste mass lies entirely above the zone of ground-water saturation, a properly designed and maintained cover can prevent, for all practical purposes, the entry of water into the closed unit, and thus minimize the formation and migration of leachate. In the absence of damage, the cover design recommended here, including the FML/soil low-permeability layer, should restrict infiltration, to the extent of the design, for the long term.

1.4 GENERAL COVER SYSTEM RECOMMENDATIONS

The cover system should be a major consideration during site selection, planning, and initial design of the landfill containment structure. Factors for consideration include location and availability of low-permeability soil, stockpiling of topsoil, restricting height to provide stable slopes, and site use beyond the post-closure care period.

1.4.1 Design Recommendations

The final cover recommended in this guidance document is a multilayer design (Figure 1) comprised as follows, from top to bottom:

- a top layer consisting of two components: (1) either a vegetated or armored surface component, selected to minimize erosion and, to the extent possible, promote drainage off the cover, and (2) a soil component with a minimum thickness of 60 cm [24 in.], comprised of topsoil and/or fill soil as appropriate, the surface of which slopes uniformly at least 3 percent but not more than 5 percent; a soil component of greater thickness may be required to assure that the underlying low-permeability layer is below the frost zone;

- either a soil drainage (and FML-protective bedding) layer with minimum thickness of 30 cm (12 in.) and a minimum hydraulic conductivity of 1×10^{-2} cm/sec that

will effectively minimize water infiltration into the low-permeability layer, and will have a final slope of at least 3 percent after settlement and subsidence; or a drainage layer consisting of geosynthetic materials with equivalent performance characteristics; and

- a two-component low-permeability layer, lying wholly below the frost zone, that provides long-term minimization of water infiltration into the underlying wastes, consisting of (1) a 20-mil [0.5 mm] minimum thickness flexible membrane liner [FML] component and (2) a compacted soil component with a minimum thickness of at least 60 cm [24 in.] and a maximum in-place saturated hydraulic conductivity of 1×10^{-7} cm/sec.

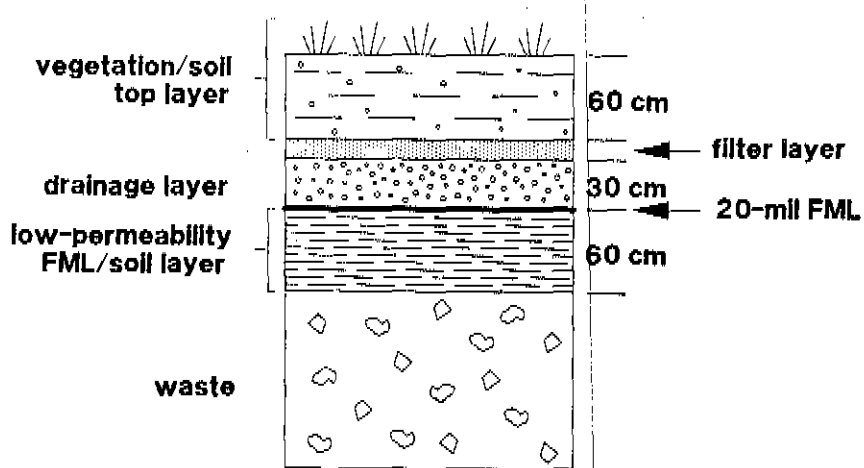

Figure 1. EPA-recommended cover design.

Optional layers may be used on a site-specific basis. Figure 2 depicts a cover design that includes optional layers. Two such layers include (1) a gas vent layer to remove gases that are produced within the wastes, and/or (2) a biotic barrier layer to protect the cover from animal or plant intrusion. Geosynthetic filter materials may also be used to prevent migration of fine materials from one layer into another or to prevent clogging of the drainage layer.

The Agency recognizes, for specific cases, that alternative designs (e.g., fewer layers or optional layers) may be applicable. For instance, in extremely arid regions, a gravel-armored top surface component might serve to compensate for a naturally reduced vegetation coverage and the erosion control that it provides. Also, in arid regions the drainage layer might not be required. In areas where burrowing animals may damage the

low-permeability layer, the damage may be prevented by use of an overlying "biotic barrier" layer of large-size material, such as cobbles. A gas vent layer between the waste and the low-permeability layer may be installed, as shown in Figure 2, at units that produce gases.

Alternative designs must provide long-term performance at least equivalent to the recommended design outlined in this guidance. All alternative designs must be approved by the appropriate Regional Administrator of the Agency.

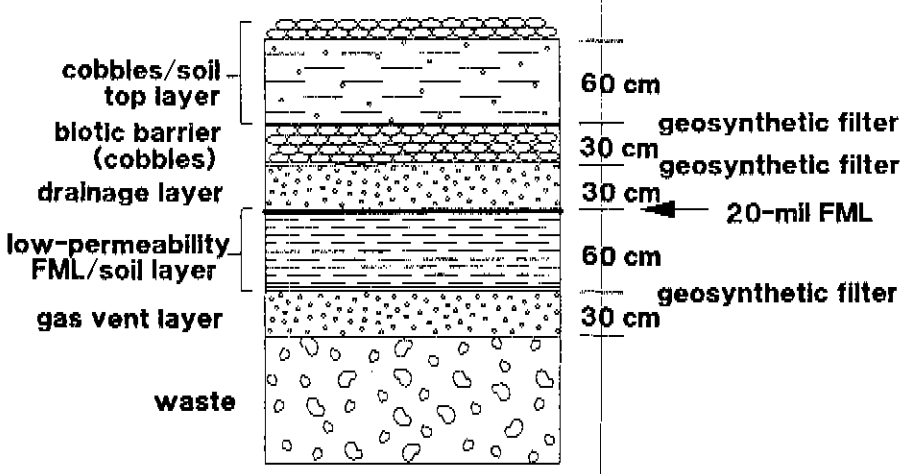

Figure 2. EPA-recommended cover design with optional layers.

In some cases, where the waste is of such character that vertical migration of gases is impeded, full-depth vent structures to the bottom of the waste mass may be needed. These structures would be designed to prevent the horizontal migration of gases out of the landfill into the surrounding soil. Active rather than passive systems may be required in some cases to adequately remove accumulated gases.

Filter layers are likely to be needed above the drainage layer and between layers that are comprised of soils of greatly different particle sizes, to prevent one from migrating into the other. The filters may be constructed of soils of intermediate grain size, or they may be geosynthetic materials. Three between-layer locations where geosynthetic filters may be appropriate are shown in Figure 2.

Table 2 presents a synopsis of the Agency-recommended components of a landfill and their principal design parameters.

1.4.2 Construction Quality Assurance (CQA)

The Agency believes that the landfill owner or operator should implement a detailed construction quality assurance (CQA) program for the final cover system based on written plans for inspecting the quality of construction materials and the construction practices employed in their placement. The Agency believes that use of a CQA program is essential for determining, with a reasonable degree of certainty, whether a completed final cover system meets or exceeds all design criteria, plans, and specifications. The Agency has issued technical guidance that includes final cover CQA (EPA, 1987i).

The Agency has proposed CQA rules for both permitted and interim status units (EPA, 1987b). These proposed rules would require a CQA program for installing the following components of landfills, surface impoundments and waste piles: foundations; low-permeability soils; FMLs; dikes; leachate detection, collection, and removal systems; and final covers. The CQA plan would be site-specific. It should address activities such as inspecting, monitoring, and sampling of the individual components. For the cover, the CQA plan should provide assurance that: 1) all layers of the final cover are uniform and damage-free; 2) the materials for each layer are as specified in the design specifications; and 3) each layer is constructed as specified in the design.

1.4.3 Settlement and Subsidence

Settlement within a closed hazardous waste landfill can disrupt the integrity and function of the final cover system. Settlement of the waste may be uniformly distributed and may occur primarily before placement of the final cover. Subsidence, however, is considered to be an unevenly distributed settlement (i.e., differential settlement) after closure that can disrupt the integrity of the final cover by creating depressions and cracks. In addition, subsidence due to the collapse of drums (this will occur mainly in older units), the leaching of soluble waste constituents, or biodegradation of organic matter in the waste, may not begin until several years after closure or it may occur gradually over decades.

To reduce the potential for damage from settlement and subsidence, the final cover should be designed and constructed to allow for the total estimated settlement. The final grade after subsidence of the cover should be at the actual desired design elevation. The cover design process used to establish the final grade elevation should include consideration of the following:

- consolidation of all waste layers (the primary consideration) and daily and intermediate soil covers;

Table 2. Synopsis of Minimum Technology Guidance for Covers

Layer	Thickness	Slope	Requirements
Top Layer			
Vegetation	--	--	Persistent, drought-resistant, adapted to local conditions.
OR			
Surface Armor	5-10 in. (13-25 cm)		Cobbles, gravel.
ON			
Soil	$\geq$ 24 in. ($\geq$ 60 cm)	3-5%	Erosion rate <2 ton/acre/yr (5.5 MT/ha/yr).
Drainage Layer			
Soil	$\geq$ 12 in. ($\geq$ 30 cm)	$\geq$ 3%	SP (USCS) soil $K > 1 \times 10^{-2}$ cm/s; gravel toe drain.
OR			
Geosynthetic	variable	$\geq$ 3%	Performance equivalent to soil, hydraulic transmissivity $\geq 3 \times 10^{-5}$ m^2/sec.
Low-Permeability Layer			
FML	$\geq$ 20 mils ($\geq$ 0.5 mm)	$\geq$ 3%	In EPA Report No. EPA 600/2-88-052.
ON			
Low-Permeability Soil	$\geq$ 24 in. ($\geq$ 60 cm)	$\geq$ 3%	In-place $K < 1 \times 10^{-7}$ cm/s and test fill.
Optional Layers (site-specific design)			
Gas Vent Layer	$\geq$ 12 in. ($\geq$ 30 cm)	$\geq$ 2%	Similar to drainage layer.
Biotic Barrier	animal or root-dependent	--	Large materials, e.g., cobbles.

- consolidation of soils and foundation materials underlying the site;
- consolidation of liner and leachate collection systems; and
- consolidation of all final cover components.

The Agency has published two technical research reports on cover settlement and subsidence (EPA, 1985c and 1987d) that address both the theoretical and practical aspects.

Interim covers have been proposed when a significant amount of settlement and subsidence is expected in a fairly short time (say 2-5 years) that could result in the premature failure of a final cover. An interim cover could be maintained until settling is judged to be virtually complete. After settlement occurs, the interim cover could be removed and replaced or overlain by a new final cover. If components of the interim cover can meet the CQA requirements for the final cover, the interim cover could be made an integral part of the final design.

In no case can an interim cover be used that does not satisfy the performance standards of 40 CFR 264.111 to protect human health and the environment. Use of an interim cover on a permitted unit will generally result in a longer closure period during which the stipulations of 40 CFR 264.113 must be met, i.e., the applicant must take all necessary steps "to prevent threats to human health and the environment from the unclosed but not operating hazardous waste management unit or facility, including compliance with all applicable permit requirements."

2. TOP LAYER

The Agency recommends a two-component top layer for a landfill cover system (Figure 1). The upper component should be vegetation or other surface treatment, designed to impede erosion but allowing surface runoff from major storm events. The Agency believes that, in most cases, vegetation underlain by soil, at least part of which is topsoil, will best accomplish these objectives. However, in some areas the prevailing climate may inhibit the establishment and maintenance of vegetation, or a planned alternative use of the site may preclude vegetation. In those cases, an armored surface without vegetation (Figure 2), and underlain by fill soil, might be used if it will minimize erosion and abrasion of the cover and allow, to the maximum practicable extent, surface drainage off the cover.

2.1 DESIGN

The Agency recommends that the vegetation component of the top layer meet the following specifications:

- Locally adapted perennial plants.
- Resistant to drought and temperature extremes.
- Roots that will not disrupt the low-permeability layer.
- Capable of thriving in low-nutrient soil with minimum nutrient addition.
- Sufficient plant density to minimize cover soil erosion to no more than 2 tons/acre/year (5.5 MT/ha/yr), calculated using the USDA Universal Soil Loss Equation.
- Capable of surviving and functioning with little or no maintenance.

In landfill situations where the environment or other considerations make it inappropriate for maintaining sufficiently dense vegetation, armoring material may be substituted as the upper component of the top layer or in rare cases the whole layer. It is recommended that the material possess the following characteristics:

- capable of remaining in place and minimizing erosion of itself and the underlying soil component during extreme weather events of rainfall and/or wind;

- capable of accommodating settlement of the underlying material without compromising the purpose of the component;

- surface slope approximately the same as the underlying soil (at least 3 percent slope); and

- capable of controlling the rate of soil erosion from the cover to no more than 2 tons/acre/year (5.5 MT/ha/yr), calculated by using the USDA Universal Soil Loss Equation.

Agency-recommended specifications for the lower soil component of the top layer include the following:

- for vegetation support, a minimum thickness of 60 cm (24 in.) including at least 15 cm (6 in.) of topsoil (soil of lower quality may be used beneath an armored surface); greater total thickness where required, e.g., where maximum frost penetration exceeds this depth, or where greater plant-available water storage is necessary or desirable;

- medium texture to facilitate seed germination and plant root development;

- final top slope, after allowance for settling and subsidence, of at least 3 percent, but no greater than 5 percent, to facilitate runoff while minimizing erosion; and

- minimum compaction to facilitate root development and sufficient infiltration to maintain growth through drier periods.

The owner or operator of the landfill should prepare a separate section specific to monitoring construction of the top layer to be included in the construction quality assurance (CQA) plan.

2.2 DISCUSSION

2.2.1 Upper Component of Top Layer

As noted in the design recommendations above, the upper component of the top layer may be vegetation (Agency-preferred where possible) or other erosion-impeding materials. These are discussed separately below.

2.2.1.1 Vegetation

Plant species is an important consideration in the establishment of vegetation when it is selected as the upper component of the top layer. The use of shrubs and trees is usually inappropriate because the root systems extend to a depth that would normally invade the drainage layer or the low-permeability layer. A large number of suitable plant species such as grasses and low-growing plants are available for various climates (EPA, 1983c and 1987c). The timing of seeding is also very important to successful vegetation establishment.

The Agency advises landfill owners or operators to contact a consulting agronomist, Cooperative Extension Service agent, or local university for recommendations of adapted plant varieties and other guidance on local crop cultivation. Several references provide lists of available vegetation and discussions on site-selection criteria (EPA, 1976, 1979, 1983a, 1983c, 1985a, and 1987c; Lee, et al., 1984; Thornburg, 1979; and Wright, 1976). These references provide essential information about plant species, seeding rate, time of seeding, and areas of adaptation.

2.2.1.2 Other Erosion-Impeding Materials

In areas where vegetation is inappropriate or difficult to establish and maintain, other materials may be selected as the upper component of the top layer. The materials should be selected to prevent erosion of the cover and yet allow, as much as practicable, for surface drainage. Several materials have been suggested for use in lieu of vegetation, including broken rock or cobbles that may prevent deterioration of the cap due to wind, heavy rain, or temperature extremes (EPA, 1982b and 1985a; Nyhan, et al., 1985; Pertusa, 1980). An example of such an upper component is a layer several (perhaps eight or more) inches thick comprised of 5- to 10-cm (2- to 4-in.) cobbles of hard durable rock. The cobbles allow infiltration of rain water but retard erosion due to water and wind action (see Figure 2). Asphalt or concrete ~~might~~ be used if promoting runoff is a prime objective, but they are likely to deteriorate, for example, by cracking due to thermal effects and subsidence deformation (EPA, 1979 and 1987a) thus causing concern for their long-term performance. Substantial maintenance could be expected for these materials. Asphalt can be very permeable unless special attention is given to eliminating the air voids during mixing and application (Repa, et al., 1987).

A surface armor component of very coarse materials promotes infiltration rather than runoff. Thus, it may be more applicable in arid areas. In those areas, leachate generation due to water infiltration may not be a major concern, but it can happen during infrequent short-duration storms of great intensity (EPA, 1987c).

2.2.2 Lower Component of Top Layer

When the upper component of the top layer is vegetation, the EPA recommends that the associated lower component be composed of at least 60 cm (24 in.) of soil. The soil should be capable of indefinitely sustaining plant species that will minimize erosion. The minimum thickness of the soil component is based upon the Agency's judgment that:

- it accommodates the root systems of most non-woody plant species (EPA, 1983c);
- for most locales, it provides adequate water-holding capacity to attenuate rainfall infiltration to the drainage layer and to sustain vegetation through dry periods; and
- it provides sufficient soil thickness to allow for expected long-term erosional losses.

A layer thicker than 60 cm (24 in.) may be required to prevent freezing and thawing from damaging the low-permeability layer, or to increase plant-available water storage capacity in drier climates.

Medium-textured soils such as loam soils, have the best overall characteristics for seed germination and plant root system development. Fine-textured soils, such as clays, are often fertile but may be beset by management problems such as puddling of water on the surface or difficulty in initial establishment of plant cover during wet periods. Sandy soils are often a problem due to low water retention and loss of nutrients by leaching. It may be cost-effective to stockpile the topsoil initially removed from a site for later use during cover construction. Where only a minimum amount of native topsoil can be saved by stockpiling, the remainder needed to provide at least the minimum thickness of 60 cm (24 in.) may be made up by selecting local borrow material having appropriate qualities.

The Agency recommends that the lower component of the top layer (and thus the entire top layer) be slightly convex, or be low in height above the surrounding terrain and uniformly sloped. In non-level terrain, diversion structures should be installed to prevent the run-on of surface water onto the cover. To prevent ponding of rainwater due to irregularities of the surface of the lower component, the final slope should be uniform and at least 3 percent, after allowance for settlement and subsidence (EPA, 1982a, p. 42). Slopes greater than 5 percent, however, are likely to promote erosion unless controls are included in the design. The design of surface water controls is well-documented (EPA, 1979 and 1982b). The Agency believes that slopes greater than 5 percent will increase erosion, decrease slope stability,

and, in general, increase the long-term maintenance of the cover system. Owners and operators using final slopes based on site-specific conditions should determine that the slopes will not result in the formation of erosion rills and gullies and will limit total erosion to less than 2.0 tons/acre/year (5.5 MT/ha/yr). The U.S. Department of Agriculture's Universal Soil Loss Equation (USLE) is recommended as the tool for use in evaluating erosion potential (EPA, 1982a). The Agency believes that a maximum erosion rate of 2.0 tons/acre/year (5.5 MT/ha/yr) is realistically achievable for a wide range of soils, climates, and vegetation. The Agency also believes that reliance on this criterion will minimize gully development and cover maintenance.

3. DRAINAGE LAYER

The recommended final cover design includes a drainage layer for the removal of water which infiltrates through the top layer (see Figures 3a and 3b). The drainage layer should be designed to minimize the amount and residence time of water coming into contact with the low-permeability layer, thereby decreasing the potential for leachate generation. In other words, the drainage layer construction materials and configuration should facilitate the rapid and efficient removal of water to an exit drain.

The drainage layer should be designed, constructed, and operated to function without clogging. Physical clogging may be prevented by incorporating a filter layer of soil or geosynthetic material between the top layer and the drainage layer. The prevention of biological clogging may range from limiting vegetation to shallow-rooted species to the installation of a biotic barrier (see Figure 2). Any or all of these features may be included in a single cover design.

In arid locations, the need for, and design of, a drainage layer should be based on consideration of precipitation event frequency and intensity, and sorptive capacity of other soil layers in the cover system. It may be possible to construct a top layer that will absorb most, if not all, of the precipitation that infiltrates into that layer, eliminating the need for a drainage layer.

3.1 DESIGN

If composed of granular material such as sand (Figure 3a), the Agency recommends that the cover drainage layer meet the following specifications:

- Minimum thickness of 30 cm (12 in.) and minimum slope of 3 percent at the bottom of the layer; greater thickness and/or slope if necessary to provide sufficient drainage flow as determined by site-specific hydrologic (e.g., HELP) modeling.

- Hydraulic conductivity of drainage material should be no less than 1×10^{-2} cm/sec (hydraulic transmissivity no less than 3×10^{-5} m^2/sec) at the time of installation.

- Granular material should be no coarser than 3/8 inch (0.95 cm), and classified as SP; it should be smooth and rounded and should contain no debris that could damage the underlying flexible membrane liner (FML), nor should it contain fines that might lessen permeability.

- A filter layer (granular or geosynthetic) should be included between the drainage layer and top layer if necessary to prevent clogging of the drainage layer by fine particles.

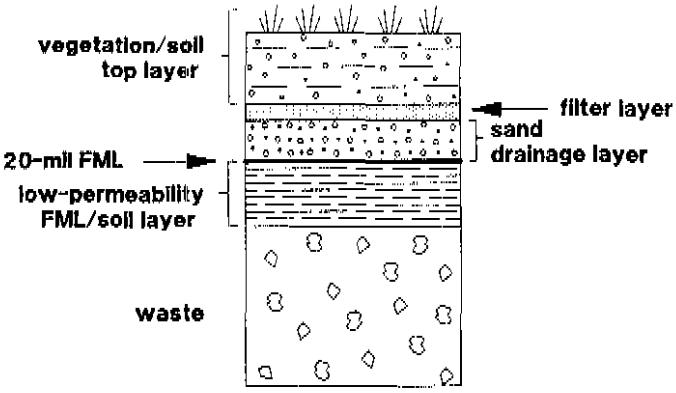

Figure 3a. Cover with sand drainage layer.

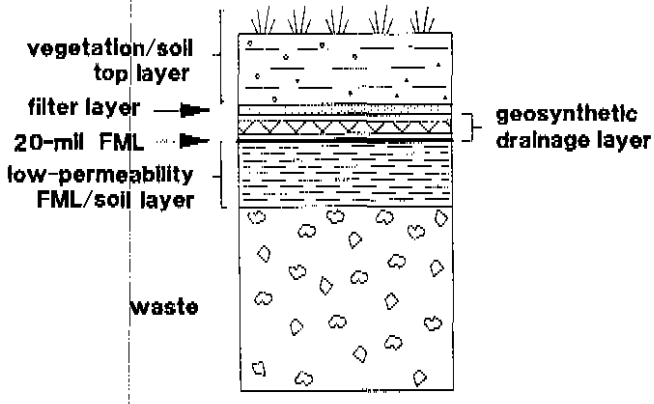

Figure 3b. Cover with geosynthetic drain layer.

If composed of geosynthetic materials (Figure 3b), the Agency recommends that the drainage layer meet the following specifications:

- Same minimum flow capabilility as a granular drainage layer in the same situation; hydraulic transmissivity no less than 3×10^{-5} m^2/sec under anticipated overburden for the design life.

- Inclusion of a geosynthetic filter layer above the drainage material to prevent intrusion and clogging by the overlying top layer soil material.

- Inclusion of geosynthetic bedding beneath the drainage layer, if necessary, to increase friction and minimize slippage between the drainage layer and the underlying FML, and to prevent intrusion, by deformation, of the FML into the net or grid of the drainage layer.

The owner or operator should prepare a written construction quality assurance (CQA) plan to be used during construction and installation of the drainage layer (see EPA, 1987b).

3.2 DISCUSSION

The primary functions of the drainage layer are to intercept water that percolates through the top layer and to transport the water out of the cover (for example, by gravity flow to an outlet at the toe of the cover). The Agency believes that the criteria presented above are the minimums required to provide cover drainage and FML protection. The criteria for permeability and FML bedding are equivalent to those cited in "Minimum Technology Guidance on Double Liner Systems for Landfills and Surface Impoundments -- Design, Construction and Operation" (EPA, 1987i) for the leachate detection, collection, and removal system.

The recommended 30-cm (12-in.) minimum thickness of the drainage layer allows sufficient cross-sectional area for transport of drainage in most situations and for protection of the FML during construction. In some cases, particularly where unusually long drainage slopes may be part of the design, drainage layers thicker than 30 cm (12 in.) and/or slopes greater than 3 percent may be necessary. The minimum value of 1×10^{-2} cm/sec for permeability was chosen because granular materials widely used as drainage media (i.e., SP soils) can provide this minimum hydraulic conductivity. In situations where the minimum criteria are insufficient or questionable, the design should utilize flow modelling in arriving at the flow-controlling design parameters. The HELP model (EPA, 1984a) can be of assistance for this purpose.

Rounded grains with a maximum size of 3/8 inch (0.95 cm) have been recommended, because they have been shown to be non-damaging to most FMLs when in direct contact with them (EPA, 1984b). Crushed stone would not normally be appropriate due to sharpness of the particles.

The drainage layer must slope to an exit drain which allows percolated water to be efficiently removed. An example of an exit drain is shown in Figure 4. Further information is provided in EPA (1985a) and Bureau of Reclamation (1977) publications. Care should be taken in the design to control the velocity of the exiting water, within and beyond the exit drains, to prevent soil loss and destabilization. Large safety factors may be needed to accommodate unexpected events.

Materials used to construct the drainage layer should be washed or screened prior to construction to remove fines that may promote clogging. To further prevent clogging of the drainage

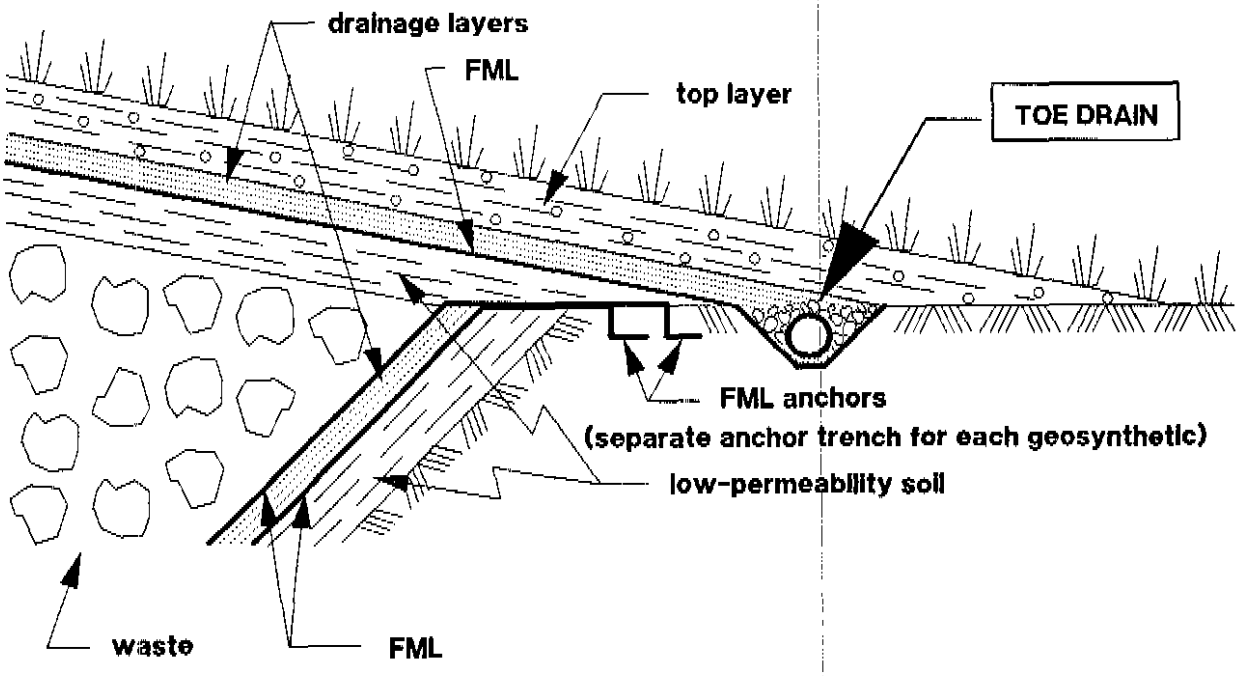

Figure 4. Cover and liner edge configuration with example toe drain.

layer, the Agency recommends that a granular or geosynthetic filter be placed directly over the drainage layer to minimize the migration of fines from the overlying topsoil into the drainage layer. If a graded granular filter is used, care should be taken to design the relationship of grain sizes according to the criteria presented below (Cedergren, 1967).

To prevent piping:

$$\frac{D_{15}\ \text{Filter}}{D_{85}\ \text{Top soil layer}} < 4\text{-}5, \text{ and}$$

$$\frac{D_{15}\ \text{Drainage layer}}{D_{85}\ \text{Filter}} < 4\text{-}5$$

To maintain permeability:

$$\frac{D_{15}\ \text{Filter}}{D_{15}\ \text{Top soil layer}} > 4\text{-}5, \text{ and}$$

$$\frac{D_{15}\ \text{Drainage layer}}{D_{15}\ \text{Filter}} > 4\text{-}5$$

To achieve uniformity of grain size distribution curves among top soil layer, filter, and drainage layer:

$$\frac{D_{50}\ \text{Filter}}{D_{50}\ \text{Top soil layer}} < 25, \text{ and}$$

$$\frac{D_{50}\ \text{Drainage layer}}{D_{50}\ \text{Filter}} < 25$$

These criteria are cited by the Army Corps of Engineers for selection of a filter layer in relation to a soil to prevent the soil from piping through the filter. D_{85} refers to the size of particle in the gradation, below which 85 percent by weight of the particles have a smaller particle size. D_{15} and D_{50} have similar definitions. The criteria must be satisfied for all layers or media in the drainage system, including protected soil, filter media, and drainage media. Criteria for granular and geotextile filter design are found in numerous references (Horz, 1984; Bureau of Reclamation, 1984 and 1977; EPA, 1987e; and Koerner, 1989).

Innovative drainage systems, such as those using geosynthetic materials (see Figure 3b), may be used if it can be shown that they are at least equivalent to the recommended granular system in hydraulic transmissivity, in performance longevity (transmissivity must be maintained for cover's design life), and in their ancillary function as FML bedding. Criteria which should be addressed in determining equivalence of geosynthetic and soil drainage materials include, but are not limited to, the following:

- hydraulic transmissivity (the rate at which liquid can be removed) no less than 3×10^{-5} m^2/sec;
- compressibility (the ability to maintain open pore space and thus transmissivity, under expected overburden);
- deformation characteristics (the ability to conform to changes in the shape of the surrounding materials);
- mechanical compatibility with the FML (the tendency for the drainage material and the FML to deform each other);
- useful life of the system; and
- ability to resist physical, chemical and biological clogging.

Geosynthetic drainage materials are manufactured in a variety of configurations, which continue to evolve with experience in manufacturing and use. "Geonets" and "geogrids" are drainage components designed for rapid flowthrough. They are manufactured as single components that usually must be separated from overlying and underlying soils that could clog them. The separating materials are also geosynthetics in the form of filter fabric. The geogrid, and top and bottom filters (which may also serve as protective bedding and slide-resistant materials), may all be factory-bonded together in one unit. These bonded-together materials, one form of "geocomposites," may be applied in one operation as the entire drainage layer. The various forms of geocomposites are well-described by Koerner (1989). In geosynthetic materials are continually being improved by the manufacturers for durability and design.

4. LOW-PERMEABILITY LAYER

The final cover system is required by 40 CFR 264.228, 264.310, and 265.310 to provide long-term minimization of migration of liquids through the closed land disposal unit and to have a permeability less than or equal to the permeability of the bottom liner system or natural subsoils present. The Agency has interpreted this to mean that the cover should contain a FML/soil composite layer (Figure 5) similar in concept (but not necessarily identical construction materials) to the composite bottom liner detailed in "Minimum Technology Guidance on Double Liner Systems for Landfills and Surface Impoundments -- Design, Construction and Operation" (EPA, 1987i) and in proposed regulations (EPA, 1987a). The two components (FML and soil) of the low-permeability layer recommended in this document are considered to function as one system. They should be designed, constructed, and operated to maximize removal of water by the

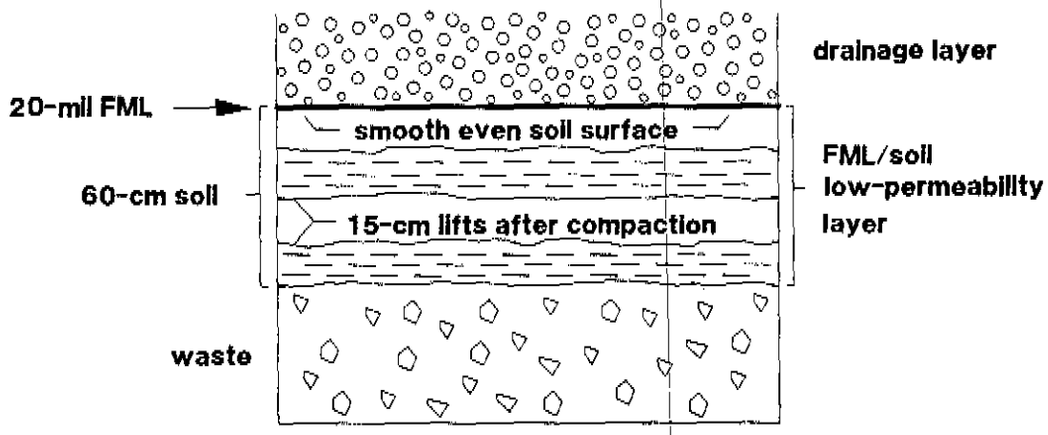

Figure 5. Detail of FML/soil composite low-permeability layer.

overlying drainage layer and to minimize infiltration of water into the waste. The low-permeability layer should require little or no maintenance during and after the post-closure period. The Agency recommends the same design for both permitted and interim status units, although it may not be required for some interim status units.

4.1 DESIGN

The Agency recommends that the low-permeability layer be located below the maximum depth of frost penetration and, at a minimum, consist of the following two components:

1. An upper FML component with the following characteristics:

   a. The FML should be at least 20 mils (0.5 mm) in thickness, but some units and/or some FML materials may require a greater thickness to prevent failure under potential stress of the post-closure care period, or during construction. The Agency recognizes that some types of FMLs must be thicker to accommodate unique seamability requirements, or to increase long-term durability (e.g., increase resistance to puncture).

   b. The surface of the FML should have a minimum 3 percent slope after allowance for settlement.

   c. There should be no surface unevenness, local depressions, or small mounding that create depressions capable of containing or otherwise impeding the rapid flow and drainage of infiltrating water.

   d. The Agency recommends the use of material and seam specifications such as those in "Lining of Waste Containment and other Impoundment Facilities" (EPA, 1987h).

   e. The FML should be protected by an overlying drainage layer of at least 30 cm (12 in.) of soil material no coarser than 3/8-in. (0.95-mm) particle size, Unified Soil Classification System (USCS) SP sand, free of rock, fractured stone, debris, cobbles, rubbish, roots, and sudden changes in grade (slope) that may impair the FML. The overlying drainage layer should suffice as bedding in most cases, but care should be taken that any included drainage pipes are not placed in a way that will damage the FML.

   f. The FML should be in direct contact with the underlying compacted soil component and should be installed on a smoothed soil surface.

g. The number of penetrations of the FML by designed structures (e.g., gas vents) should be minimized. Where penetrations are necessary, the FML should be sealed securely around the structure.

h. Bridging or similar stressed conditions in the FML should be avoided by providing slack allowances for temperature-induced shrinkage of the FML during installation and during the period prior to placement of the protective layer or drainage layer.

i. Slack should not be excessive to the extent that folds are created that later may crack.

2. A bottom low-permeability soil component with the following characteristics:

a. The soil should be at least 60 cm (24 in.) of compacted, low-permeability soil with an in-place saturated hydraulic conductivity of 1×10^{-7} cm/sec or less.

b. The compacted soil must be free of clods, rock, fractured stone, debris, cobbles, rubbish, and roots, etc., that would increase the hydraulic conductivity or serve to promote preferential water flow paths.

c. The upper surface of the compacted soil (which is in contact with the FML) should have a minimum slope of 3 percent after allowance for settlement.

d. The soil layer should be constructed so that it will be entirely below the maximum depth of frost penetration upon completion of the cover system.

The written CQA plan prepared by the owner/operator should include a separate section specific to monitoring the installation of both the FML and compacted soil liner (see EPA, 1987i).

4.2 DISCUSSION

The Agency believes that the recommended two-component low-permeability layer design (Figure 5) is the best practicable, in most cases, to minimize infiltration of surface water into the underlying waste. Both the FML and the compacted soil components have excellent characteristics to prevent infiltration into underlying waste over the long term when properly designed, installed, and operated in accordance with site-specific conditions. Their characteristics tend to complement each other,

so that the long-term effectiveness of the two components together is greater than each alone. A summary discussion of the comparative effectiveness of the composite liner in the bottom liner application appears in a Federal Register notice (EPA, 1987f). A more complete discussion appears in "Background Document on Bottom Liner Performance in Double-Lined Landfills and Surface Impoundments" (EPA, 1987g). In short, the FML will tend to roof over the inconsistencies in the underlying compacted soil, while the compacted soil will tend to significantly impede the flow of any leakage through a hole in the overlying FML. In addition, each component tends to back up the other in the event of a failure of either.

In the past, due to lack of data on durability, the Agency has considered the FML to be short-lived compared to compacted soil. Thus, the Agency has thought of the FML as fulfilling a function of "short-term prevention" of infiltration, while the soil provides for "long-term minimization." With increasing knowledge of FML characteristics and performance, and the increasing technical ability to custom-tailor FML materials to the containment need, it is now the consensus that they, too, can be made to last for very long periods of time (EPA, 1988a). Of course, this implies that care be taken in the construction, and later operation of the facility, that all design requirements are met, that certain waste consolidation conditions are met to minimize settlement problems, and that physical damage does not occur. The same implication applies to the soil component even though the design requirements and potential physical damage are significantly different.

The following subsections provide more detail on the design rationale for each of the two components of the low-permeability layer.

4.2.1 FML Component

The Agency recommends that, in no case, should the thickness of the FML be less than 20 mils (0.5 mm). The Agency believes that this is the minimum acceptable thickness to meet cover objectives and still be sufficiently rugged to withstand expected stresses during construction and operation. In many, if not most, cases the thickness should be greater. The adequacy of the selected thickness should be demonstrated by an evaluation considering the type, strength, and durability of the proposed FML material, its seamability, and site-specific factors such as: steepness of slopes, physical compatibility with the material used in the underlying and overlying layers, stresses of installation, expected overburden, climatic conditions, settlement, and subsidence.

FML failure mechanisms are discussed in several reports (EPA 1985a, 1983b, 1987h). Most failures result from inadequacies in the design and construction processes. It follows then that most failures can be prevented if a strict quality assurance program is adhered to during the construction process. The Agency has placed great emphasis on construction quality assurance, particularly in the construction of barrier layers, and has published guidance in that area for landfill waste containment liners (EPA, 1986).

One of the causes of FML failure in landfill and surface impoundment lining systems is chemical incompatibility. However, the FML in a final cover should not come in direct contact with any wastes and chemical incompatibility should not be of concern. This makes it possible to accept a wider range of FML materials in cover systems. It should be remembered here that it was not the Agency's intent in the regulations that the bottom liner and cover barrier necessarily be constructed of the same material.

Another of the primary causes of FML failure is damage during installation or operation. To aid in preventing damage, such as punctures, rips and tears, at least 30 cm (12 in.) of bedding material above and below the membrane is recommended. Since the FML is in direct contact with the low-permeability soil layer, that layer will serve as the underlying FML bedding. In most cases, the drainage layer above the membrane will suffice as the overlying FML bedding. A minimum underlying bedding thickness of 30 cm (12 in.) is recommended, the same as for the drainage layer. The actual bedding thickness should, however, be based upon consideration of failure mechanisms and construction methods potentially harmful to the FML (e.g., if construction equipment or methods are capable of penetrating the 30-cm [12-in.] drainage layer and tearing, ripping or puncturing the FML, then the thickness should be increased). If the design thicknesses for drainage and bedding differ, then the greater thickness should be used. Geosynthetic drainage materials may also serve as protective bedding if they can provide equivalent protection for the design life of the cover system.

Penetration of the FML by gas vents or drainage pipes should be minimized. Where a vent is necessary, it is essential to obtain a secure, liquid-tight seal between the structure and the FML to prevent leakage of water around the vent (see Section 5). Settlement of the material around the structure may create destructive stresses in the FML, which should be taken into account in the design of both the structure and the FML collar.

Differential settlement across the cover may also cause disruptive stresses that should be accounted for in the FML design. Care should be taken to make allowance for these and other stresses. For example, wrinkles and folds might be created

intentionally to reduce stress, but they may, in turn, result in stresses in the folds that can lead to long-term failure of the FML (EPA, 1988b).

The subgrade for the FML must be carefully prepared and smoothed so that no small-scale stress points are created due to protrusions of rocks or other materials. In most cases, this should cause no difficulty, since the subgrade will be the low-permeability soil component, comprised of fine material.

Field-seaming of the FML must be done carefully by technicians qualified and experienced in seaming the particular FML being installed. Holes can result from discontinuous seams or those not sufficiently sturdy to withstand unavoidable stresses. Some FMLs require destructive surface preparation (e.g., grinding) prior to seaming; all will expand and shrink with temperature changes. These characteristics may promote later leakage if not carefully considered in the construction process. All of the potential failure causes can be minimized or prevented by using expert installers and adhering to a strict construction quality assurance program (EPA, 1986).

4.2.2. Low-Permeability Compacted Soil Component

The Agency believes that a compacted soil component beneath, and in direct contact with, the FML will:

- minimize, over the long term, liquid migration into the waste in the event of FML failure or through imperfections (holes, tears, etc.) inadvertently left during the construction process;
- provide a firm foundation for the overlying layers of the cover system;
- serve as bedding material for protection of the overlying FML; and
- in conjunction with the FML, satisfy the regulatory requirement for the cover to be no more permeable than the bottom liner of the facility.

The design of the soil layer will depend on site-specific factors including the properties and engineering characteristics of the soil being compacted, the degree of compaction attainable, the total expected load, and the expected precipitation.

The Agency recommends a minimum thickness of 60 cm (24 in.) for the low-permeability soil component. The minimum thickness is based upon constructability considerations and the ability to provide uniformity in overall permeability. Sixty centimeters allows for the installation of four lifts (see Figure 5),

considered sufficient to overcome any inconsistencies in the underlying surface. The four lifts also allow the localized inconsistencies in permeability in one lift to be "sealed" by the overlying lift.

As in the case of landfill liners, the Agency recommends the use of a test fill (EPA, 1986, 1987i, and 1988c) prior to actual construction of the soil component. The purpose is to demonstrate, where appropriate soil is available, that the compacted soil component actually can be constructed to an hydraulic conductivity no greater than 1×10^{-7} cm/sec. (Most of the ensuing discussion assumes that soil will be available that can meet the 1×10^{-7} criterion.) The Agency believes that construction of a test fill utilizing the soil, equipment, and procedures to be used in construction of the low-permeability layer will ensure that design specifications are attainable with the available materials and equipment.

The test fill need not be constructed on the waste. The Agency believes that, if the waste consolidation or compressive strength of the waste is insufficient to allow adequate compaction of the low-permeability soil component, that problem should be corrected before installation of the compacted soil. One of the possible solutions is to install an interim cover, as noted earlier for the mitigation of subsidence. If components of the interim cover can meet the CQA requirements for the final cover, the interim cover could be made an integral part of the final design.

Potential failure mechanisms that must be considered in evaluating the design of the compacted soil component include subsidence, dessication cracking, and freeze-thaw cycling. Subsidence has been discussed in the Introduction. The main factor of concern in design to counter subsidence is the consolidation potential remaining at the time of cover installation. That potential is difficult to estimate, but, in the estimation, information regarding the presence of voids and compressible materials in the underlying waste is all-important. Ordinarily, most of the consolidation that will take place in hazardous waste landfills has occurred by the time of cessation of waste placement (EPA, 1985c and 1987d). An important benefit is the ability of the compacted soil component to deform somewhat without rupturing, a desirable characteristic related to the soil's compressive and tensile strengths under expected field conditions of moisture, density, etc.

The potential for desiccation of the compacted clay component will depend on the physical properties of the clay, design moisture content, local climatology, and moisture content of the underlying waste. The actual clay-size particle content of the soil, the type of clay, and properties such as liquid

limit, plasticity, and shrinkage should be used to select a soil with low cracking potential or in determining placement procedures to reduce cracking potential (RTI, 1983; EPA, 1979).

Compaction of the soil component wet of optimum is recommended by the Agency to assure that the lowest permeability may be attained with standard Proctor densities (RTI, 1983). To guard against drying in this case, the applicant may propose immediate installation of the FML above the soil. If this is done, it must first be assured that the installation of the soil is complete, including a smooth surface on which to directly apply the FML.

Freeze-thaw conditions are an important potential source of damage to the soil component of the low-permeability layer. Cycles of freezing and thawing may cause material cracking, lessening of density, and loss of strength. This is brought about by volume expansion of liquids in pore spaces during freezing which, after thawing, increases the accessibility of liquids to the pore spaces (EPA, 1983b). Cracking may be created due to the expansion associated with freezing. For these reasons, the Agency recommends that, upon completion of cover system construction, the low-permeability layer be entirely below the maximum depth of frost penetration estimated for the area in which the facility is constructed. In other words, the top layer and drainage layer of the cover together should be thicker than the maximum depth of frost penetration. In northern areas of the United States this recommendation would necessitate a top layer thicker than the recommended 60-cm (24-in.) minimum.

Figure 6 is provided to show the variability of mean frost penetration across the United States (Stewart, et. al., 1975). The figure is provided only for perspective. It should not be used to find the maximum depth of frost penetration at any particular site. In determining the site-specific maximum depth of frost penetration, advice may be sought from the Soil Conservation Service, utility companies, construction contractors, and universities in the area of concern.

Penetration of the low-permeability soil component by gas vents or drainage pipes should be minimized. Adequate attention must be given to the design of seals for such penetrations and possible complications induced by differential settlement of natural and man-made materials at penetration points. The Agency has no information specific to the adequacy of seals in the soil component of the low-permeability layer.

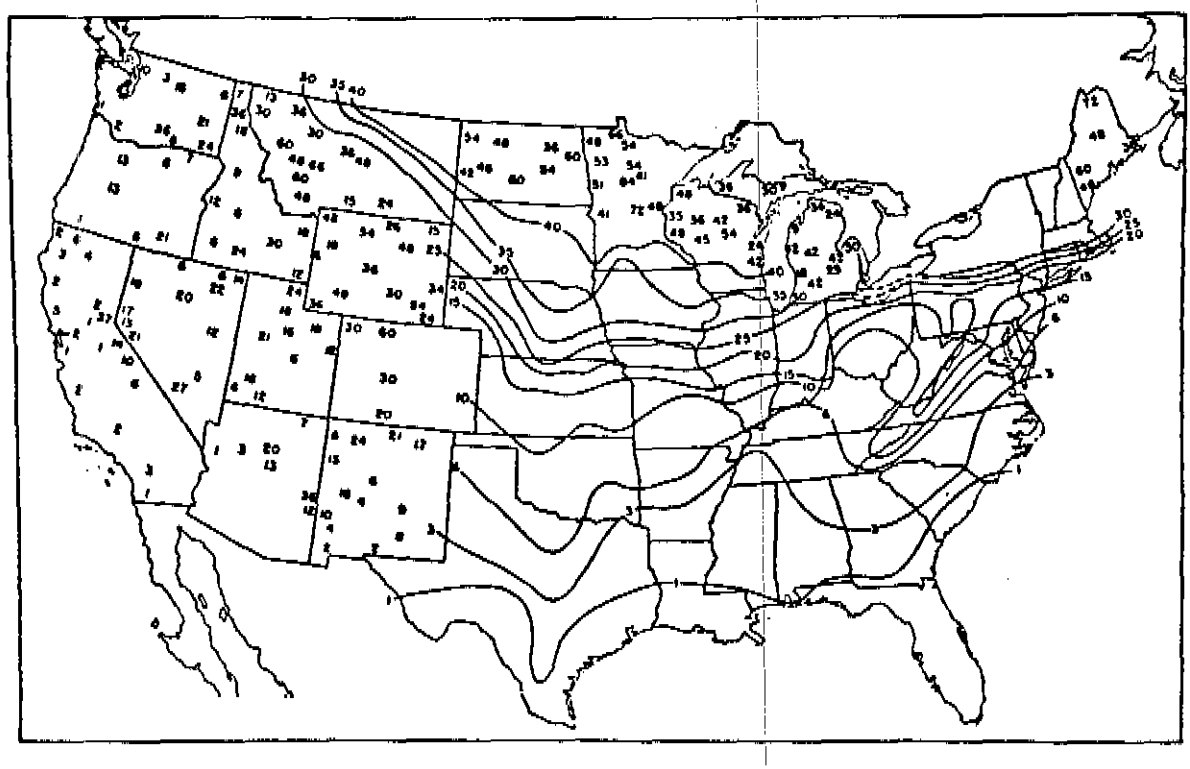

Figure 6. Regional average depth of frost penetration in inches (Stewart, et al., 1975).

5. OPTIONAL LAYERS

The optional layers discussed in this section are the gas vent and biotic barrier layers. Other layers may be needed on a site-specific basis. The Agency does not have information on the performance of these layers in full-scale multilayer cover systems.

5.1 GAS VENT LAYER

The function of a gas vent layer (Figure 7) is to control combustible or toxic gases released from wastes buried in a disposal facility. Hazardous waste disposal facilities that are most likely to require a gas vent layer are co-disposal facilities that receive organic waste material such as that found in municipal waste. However, certain chemicals may also emit gases or vapors in sufficient quantity to require venting.

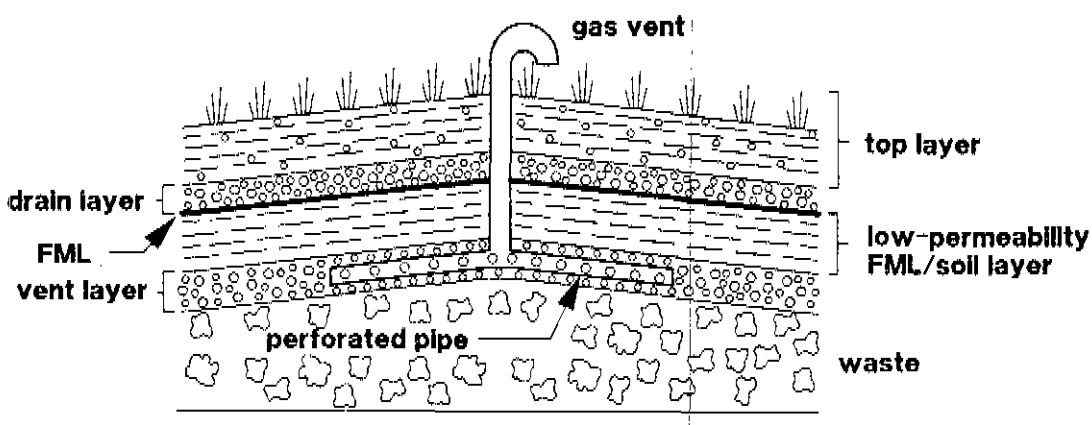

Figure 7. Cover with gas vent outlet and vent layer.

5.1.1 Design

The Agency offers the following design recommendations, based upon engineering judgment, for a gas vent layer:

- The layer should be a minimum of 30 cm (12 in.) thick and should be located between the low-permeability soil liner and the waste layer (see Figure 2).

- Materials used in construction of the gas vent layer should be coarse-grained, porous materials such as those used in the drainage layer.

- Geosynthetic materials may be substituted for granular materials in the vent layer if equivalent performance can be shown.

- Venting to an exterior collection point for disposal or treatment should be provided by means such as horizontal perforated pipes, patterned laterally throughout the gas vent layer, which channel gases to vertical risers.

- The number of vertical risers through the cover should be minimized and located at high points in the cross-section, and designed to prevent water infiltration through and around them.

An alternative design, particularly useful for layered landfills where vertical migration is impeded, may include perforated vertical collector pipes penetrating to the bottom of the landfill. In this case, several cover penetrations may be required, one for each standpipe. Here again, the pipes should be securely sealed to the low-permeability layer. The standpipes may be 30 cm (12 in.) or more in diameter and may be dual purpose, serving also to provide access for measurement of leachate levels.

The written CQA plan prepared by the owner/operator should contain a specific section which covers monitoring the construction and installation of the gas vent system.

5.1.2 Discussion

Materials used in construction of the gas vent layer should have specifications similar to the granular material used for the drainage layer. The materials should be chosen and placed in a way that facilitates the emplacement and compaction of the overlying low-permeability soil component. Once placed, the granular material should allow free movement of gases to collection pipes and/or outlet points.

The outlets may consist of pipes or vents allowing the gas to be collected, vented, or treated. The vent layer and outlet should be designed to minimize cover penetrations which could allow possible liquid infiltration through the cover. Outlet vents should be constructed through the barrier layer at the highest elevation of the gas vent layer to allow maximum evacuation of gas (see Figure 7).

A minimum thickness of 30 cm (12 in.) is recommended to assure that a continuous layer of reasonable thickness (to allow free movement of gases) is provided after placement on a non-uniform waste surface.

In addition to providing gas removal, the gas vent layer may provide a protective foundation upon which to construct the compacted soil liner. The vent layer must be placed over the waste up to design elevation, allowing for estimated settlement, prior to placement and compaction of the soil liner. A filter, either granular or geotextile, may be required between the gas vent layer and the low-permeability soil to prevent clogging.

Alternative gas layer designs (e.g., using geosynthetic materials) may be considered if it can be shown that they provide a level of performance equivalent to a 30-cm (12-in.) granular layer. Equivalence is based upon the ability of the design to efficiently remove any gases produced, resist clogging, prevent infiltration, withstand expected overburden pressures, and function under the stresses of construction and operation.

Designs for gas vent layers can be found in several EPA publications (EPA 1979, EPA 1985a).

Alternative, vertical standpipe gas collectors are constructed of perforated sections, being built up as the unit is filled with waste. They may be constructed of concrete and wrapped with geosynthetic filter material to prevent clogging of the perforations.

5.2 BIOTIC BARRIER LAYER

Plant roots or burrowing animals (collectively described as biointruders) may disrupt the integrity of the drainage and low-permeability layers. The drainage layer may be especially susceptible to the intrusion of plant roots, which could interfere with the drainage capability of the material. The danger of FML penetration by plant intrusion has not been proven. Burrowing animals may be a greater threat to FMLs, if a threat indeed exists. In the absence of an FML, the low-permeability soil layer could be exposed to both root and animal penetration.

Physical barriers, such as layers of cobbles or coarse gravel beneath the top layer, and chemical barriers, have been proposed to discourage or reduce the threat of biointrusion.

5.2.1 Design

The Agency knows of no full-scale application that would prove the effectiveness of a biotic barrier in a landfill situation. Therefore, the design of such a barrier must rely on the results of small-scale field experiments. Experiments with

barrier layers of cobbles have been carried out in arid or semi-arid situations, with plants unique to such habitats (Cline, 1979 and Cline, et al, 1982). Some research suggests that three feet (90 cm) of cobbles, or six inches (15 cm) of gravel over 30 inches (75 cm) of cobbles, may be effective in stopping root penetration of some deep-rooted plants (DePoorter, 1982). It may also be effective in stopping the invasion of burrowing animals. The biotic barrier layer would directly underlie the soil component of the top layer, perhaps separated by a geosynthetic filter layer.

A polymeric herbicide carrier/delivery (PCD) system, used to release herbicide, as discussed by Cline, et al. (1981), might be installed within a cover, also just above the drainage layer to stop the intrusion of roots below the system. The PCD system would contain an herbicide designed to be released slowly over many years. Note here the probable reluctance of the Agency in approving this alternative, because it may introduce a hazardous waste to the cover system, and/or it may not last through the 30-year post-closure period.

5.2.2 Discussion

Research by Cline (1979) and Hokanson (1986) found that if objects, such as cobbles, placed in a burrowing animal's path are too large or tightly packed, the animal's progress is effectively stopped. Hokanson also found that large void spaces, which lack water and nutrients, within the layer of stone, reduced the intrusion of plant roots. On the other hand, the layer of very coarse materials, at least in arid areas, may favor the growth of grasses by impeding the downward percolation of moisture, thus helping to retain it in the top soil layer.

Cline et al. (1982) also looked at the effectiveness of several phytotoxins impregnated into polymeric sheets and buried in soil. Some of them met the goal of being effective in stopping the downward progress of root growth, with no other effects. Some of the phytotoxins killed the plants when the roots encountered the sheet, while others had no effect. Obviously, a chemical biotic barrier must be chosen carefully, if at all, to avoid potentially adverse environmental effects.

Most of the research on the effectiveness of biotic barriers has been done in arid areas. Thus, the results must be used with caution in areas of greater precipitation. The design and resulting effectiveness of a biotic barrier are site-specific and dependent upon the overlying topsoil layer, biotic barrier material, natural precipitation, and anticipated biointruders.

REFERENCES

Bowles, J. E. 1979. Physical and Geotechnical Properties of Soils. McGraw-Hill, Inc., New York, NY.

Bureau of Reclamation. 1984. Earth Manual. U.S. Department of the Interior. Government Printing Office, Washington, D.C.

Bureau of Reclamation. 1977. Design of Small Dams. U.S. Government Printing Office, Washington, D.C.

Cedergren, H. R. 1967. Seepage, Drainage, and Flow Nets. John Wiley & Sons, Inc., New York, NY.

Cline, J. F. 1979. Biobarriers Used in Shallow-Burial Ground Stabilization. Pacific Northwest Laboratory Report for U.S. Department of Energy. PNL Report No. 2918.

Cline, J. F., D. A. Cataldo, F. G. Burton, and W. E. Skiens. 1982. Biobarriers Used in Shallow Burial Ground Stabilization. In Nuclear Technology, Vol. 58, pp. 150-153. August 1982.

DePoorter, G. L. 1982. Shallow Land Burial Technology Development - Presentation for the Low-Level Waste Management Program Review Committee. Los Alamos National Laboratory, Los Alamos, NM.

Environmental Protection Agency. 1976. Erosion and Sediment Control; Surface Mining in the Eastern United States, Planning. Vols. 1 and 2. Report No. EPA-625/3-76-006.

Environmental Protection Agency. 1979. Design and Construction of Covers for Solid Waste Landfills. Report No. EPA-600/2-79-165. NTIS PB 80-100381. Municipal Environmental Research Laboratory, Cincinnati, OH.

Environmental Protection Agency. 1982a. Evaluating Cover Systems for Solid and Hazardous Waste. Report No. SW-867. NTIS PB 87-154894. Municipal Environmental Research Laboratory, Cincinnati, OH.

Environmental Protection Agency. 1982b. Remedial Action at Waste Disposal Sites. Report No. EPA-625/6-82-006. NTIS PB 82-239054. Municipal Environmental Research Laboratory, Cincinnati, OH.

Environmental Protection Agency. 1983a. Hazardous Waste Land Treatment. Report No. SW-874. NTIS PB 81-182107. Municipal Environmental Research Laboratory, Cincinnati, OH.

Environmental Protection Agency. 1983b. Lining of Waste Impoundment and Disposal Facilities. Report No. SW-870. NTIS PB 86-192796. Municipal Environmental Research Laboratory, Cincinnati, OH.

Environmental Protection Agency. 1983c. Standardized Procedures for Planting Vegetation on Completed Sanitary Landfills. Report No. EPA 600/2-83-055. NTIS PB 83-241018. Municipal Environmental Research Laboratory, Cincinnati, OH.

Environmental Protection Agency. 1984a. The Hydrologic Evaluation of Landfill Performance (HELP) Model. Vol. 1 and 2, User's Guides for Version 1. Report No. EPA/530-SW-84-009 and EPA/530-SW-84-010. NTIS PB 85-100840 and PB 85-100832. Municipal Environmental Research Laboratory, Cincinnati, OH.

Environmental Protection Agency. 1984b. Laboratory Studies of Soil Bedding Requirements for Flexible Membrane Liners. Report No. EPA 600/2-84-021. NTIS PB 84-14148. Municipal Environmental Research Laboratory, Cincinnati, OH.

Environmental Protection Agency. 1985a. Covers for Uncontrolled Hazardous Waste Sites. Report No. EPA-540/2-85-002. NTIS PB 87-119483. Hazardous Waste Engineering Research Laboratory, Cincinnati, OH.

Environmental Protection Agency. 1985b. Remedial Action at Waste Disposal Sites. Report No. EPA/625/6-85/006. NTIS PB 87-201034. Hazardous Waste Engineering Research Laboratory, Cincinnati, OH.

Environmental Protection Agency. 1985c. Settlement and Cover Subsidence of Hazardous Waste Landfills. Report No. EPA-600/2-85/035. NTIS PB 85-188829. Municipal Environmental Research Laboratory, Cincinnati, OH.

Environmental Protection Agency. 1986. Technical Guidance Document: Construction Quality Assurance for Hazardous Waste Land Disposal Facilities. Report No. EPA-530/SW-86-031. NTIS PB 87-132825. Office of Solid Waste and Emergency Reponse, Washington, DC.

Environmental Protection Agency. 1987a. Proposed Amendments for Landfill, Surface Impoundment, and Waste Pile Closures; proposed amendment to rule. Federal Register, Vol. 52, No. 53, March 19, 1987, Part 111.

Environmental Protection Agency. 1987b. 40 CFR Parts 260, 264, 265, 270, and 271. Liners and Leak Detection for Hazardous Waste Land Disposal Units; Notice of Proposed Rulemaking. Federal Register, Vol. 52, No. 103, May 29, 1987, Part 111.

Environmental Protection Agency. 1987c. Engineering Guidance for the Design, Construction and Maintenance of Cover Systems for Hazardous Waste. Report No. EPA/600/2-87/039. NTIS PB 87-191656/AS. Hazardous Waste Engineering Research Laboratory, Cincinnati, OH.

Environmental Protection Agency. 1987d. Prediction/Mitigation of Subsidence Damage to Hazardous Waste Landfill Covers. Report No. EPA 600/2-87/025. NTIS PB 87-175378. Hazardous Waste Waste Engineering Research Laboratory, Cincinnati, OH.

Environmental Protection Agency. 1987e. Geosynthetic Design Guidance for Hazardous Waste Landfill Cells and Surface Impoundments. Report No. EPA/600/2-87/097. NTIS PB 88-131263/AS. Hazardous Waste Engineering Research Laboratory, Cincinnati, OH.

Environmental Protection Agency. 1987f. Federal Register Notice re: Bottom Liner Performance in Double-Lined Landfills and Surface Impoundments. Federal Register, Vol. 52, No. 74, April 17, 1987. Pages 12566-12575.

Environmental Protection Agency. 1987g. Background Document on Bottom Liner Performance in Double-Lined Landfills and Surface Impoundments. Report No. EPA/530-SW-87-013. NTIS PB-87-182291. Office of Solid Waste and Emergency Response, Washington, DC.

Environmental Protection Agency. 1987h. Lining of Waste Containment and Other Impoundment Facilities. Report No. EPA/600/2-88/052. NTIS PB 89-129670/AS. Risk Reduction Engineering Laboratory, Cincinnati, OH.

Environmental Protection Agency. 1987i. Minimum Technology Guidance on Double Liner Systems for Landfills and Surface Impoundments - Design, Construction and Operation. Report No. EPA/530-SW-85-014. NTIS PB 87-151072. Office of Solid Waste and Emergency Response, Washington, DC.

Environmental Protection Agency. 1988a. Consensus Report of the ad hoc Meeting on the Service Life in Landfill Environments of Flexible Membrane Liners and other Synthetic Polymeric Materials of Construction. Report No. EPA 600/x-88-252. Unpublished.

Environmental Protection Agency. 1988b. Use of Construction Quality Assurance (CQA) Programs. Unpublished memo on stress cracking. Office of Solid Waste, Washington DC.

Environmental Protection Agency. 1988c. Design, Construction, and Evaluation of Clay Liners for Waste Management Facilities. Report No. EPA/530/SW-86/007F. NTIS PB 86-184496. Office of Solid Waste and Emergency Response, Washington, DC.

Hokanson, T. E. 1986. Evaluation of Geologic Materials to Limit Biological Intrusion of Low-Level Radioactive Waste Disposal Sites. Los Alamos National Laboratory. Report No. LA-10286-MS.

Horz, R. C. 1984. Geotextiles for Drainage and Erosion Control at Hazardous Waste Landfills. Report No. EPA 600/2-86-085. NTIS PB 87-129557. Hazardous Waste Engineering Research Laboratory, Cincinnati, OH.

Koerner, R. M. (in press). Designing with Geosynthetics - Second Edition. Prentice-Hall, Englewood Cliffs, NJ.

Lee, C. R., J. G. Skogerboc, K. Eskew, R. W. Price, N. R. Page, M. Clar, R. Kort, and H. Hopkins. 1984. Restoration of Problem Soil Material at Corps of Engineers Construction Sites. Instruction Report EL-84-1, U.S. Army Engineer Waterways Experiment Station, Vicksburg, MS.

Nyhan, J. W., W. V. Abeele, B. J. Drennon, W. J. Herrera, E. A. Lopez, G. J. Langhorst, E. A. Stallings, R. D. Walker, and J. L. Martinez. 1985. Development of Technology for the Design of Shallow Land Burial Facilities at Arid Sites. LA-UR-35-3278. Proceedings of the Seventh Annual Participants' Information Meeting, DOE, Low Level Waste Management Program.

Pertusa, M. 1980. Materials to Line or to Cap Disposal Pits for Low-Level Radioactive Wastes. Geotechnical Engineering Report GR80-7. University of Texas, Austin, TX.

Repa, E. W., J. G. Herrmann, E. F. Tokarski, and R. R. Eades. 1987. Evaluating Asphalt Cap Effectiveness at a Superfund Site. Jour. Env. Eng., Vol. 113, No. 3. June 1987. pp. 649-653.

Stewart, B. A., et al. 1975. Control of Water Pollution from Cropland: Volume 1 - A Manual for Guideline Development. USDA Report No. ARS-H-5-1. U. S. Dept. of Agriculture, Hyattsville, MD.

Thornburg, A. A. 1979. Plant Materials for Use on Surface Mined Lands. TP-157 and EPA-600/7-79-134. Soil Conservation Service, U.S. Department of Agriculture, Washington, D.C.

Wright, M. J. (Ed.). 1976. Plant Adaptation to Mineral Stress in Problem Soils. Cornell University Agricultural Experiment Station. Ithaca, NY.

☆ U.S. GOVERNMENT PRINTING OFFICE: 1989-846-163/00303