RECEIVED
N.C. Dept. of EHNR
NOV 17 1993
Winston-Salem
Regional Office

November 16, 1993

Conceptual Corrective Action Plan
Volatile Organic Compound Contamination in Groundwater
Draper Corporation
5644 Hornaday Road
Greensboro, North Carolina

Prepared for:

Mr. Denny Walker
Draper Corporation
Post Office Box 18100
Greensboro, North Carolina 27419

Prepared By:

Triad Environmental Consultants, Inc.
3519 Clemmons Road
Clemmons, North Carolina 27012

Reviewed By:

Brooks, Pierce, McLendon, Humphrey and Leonard

NORTH CAROLINA LICENSED SEAL 456 GEOLOGIST DAN M. GROOME

Dan M. Groome, P.G.
(Seal)

TABLE OF CONTENTS

1.0 INTRODUCTION 1

1.1 Site Description 1
1.2 Purpose of the Corrective Action Plan 1
1.3 Summary of Initial Corrective Actions 2
1.4 Previous Reporting 2

2.0 OBJECTIVE OF THE CORRECTIVE ACTION PLAN 3

3.0 EXPOSURE ASSESSMENT 3

3.1 Analytical Data 3
3.2 Contaminant Characteristics 3
3.3 Potential Exposure Pathways 4

4.0 REMEDIAL ALTERNATIVES 5

5.0 PROPOSED CORRECTIVE ACTION PLAN 7

5.1 Overview 7
5.2 Conceptual Design 8
5.3 System Security 9
5.4 System Limitations 9
5.5 System Operation and Maintenance 10
5.6 Follow-up Monitoring and System Evaluation 10

FIGURES

FIGURE 1 - USGS TOPOGRAPHIC MAP

FIGURE 2 - COUNTY ROAD MAP

FIGURE 3 - MONITOR WELL LOCATIONS AND CONTAMINATION AREAS

FIGURE 4 - PROPOSED SPARGE POINT CONSTRUCTION DETAILS

TABLES

TABLE 1 - GROUNDWATER SAMPLE LABORATORY DATA

1.0 INTRODUCTION

On behalf of Draper Corporation, Triad Environmental Consultants, Inc. is submitting this Corrective Action Plan (CAP). This CAP is in response to the discovery of volatile organic compounds (VOCs) in the groundwater at the site. This report details the proposed strategy for remediation of the groundwater contamination. To our knowledge, no incident number has yet been assigned for this site.

1.1 Site Description

The Draper Corporation facility is located at 5644 Hornaday Road in Greensboro, North Carolina. The site is located near the intersection of Interstate I-40 and Guilford College Road. A portion of the USGS topographic map (Guilford Quadrangle) including the site is included as Figure 1. Also, a portion of the Guilford county road map showing the site is included as Figure 2.

1.2 Purpose of the CAP

The purpose of the CAP is to present the proposed remediation methods for restoration of the groundwater on the subject site. Concentrations of certain VOCs that exceed regulatory levels established by 15A NCAC 2L were discovered in the groundwater in several areas of the site. Five (5) distinct areas of groundwater contamination have been identified. The cause(s) and source(s) of the contamination have not been determined at the time of preparation of this report.

1.3 Summary of Initial Corrective Actions

Initial actions have been the performance of an investigation to determine the extent of the contamination. Since no source(s) of contamination have been identified, no other corrective actions have been initiated as of the time of this report.

1.4 Previous Reporting

The following lists the previous reports submitted to the NCDEM relating to the volatile organic compound contamination on this site:

- Extended Phase I Environmental Assessment Exhibit "G" and Limited Phase II Assessment, January 21, 1993.
- Comprehensive Site Assessment, September 17, 1993.

Additionally, reports have been submitted to the NCDEM relating to a release of #4 fuel oil from an underground storage tank (UST) system that was present on the site. These reports are listed below:

- Closure Report, December 30, 1992.
- Report of Findings, March 8, 1993.
- Comprehensive Site Assessment, May 10, 1993.
- Corrective Action Plan, September 24, 1993.

2.0 OBJECTIVE OF THE CAP

The objective of the CAP is to describe the proposed methods to be utilized in the reduction of contaminant concentrations in the groundwater on the site. The proposed target cleanup concentrations are the levels established by the 15A NCAC 2L standards. Work toward system installation and start-up is underway. A target completion date will be finalized upon evaluation of system effectiveness.

3.0 EXPOSURE ASSESSMENT

3.1 Analytical Data

Table 1 lists laboratory data for groundwater samples obtained on several dates from the monitor wells located on the site. Figure 3 shows the locations of the monitor wells and identifies the areas of contamination.

3.2 Contaminant Characteristics

The physical and chemical characteristics of the contaminants exceeding 15A NCAC 2L standards identified on the site are as follows:

Tetrachloroethene - Clear, colorless liquid with a mild, chloroform-like odor. Specific gravity 1.62.

Chloroform - Colorless liquid with a pleasant odor. Specific gravity 1.48.

1,1-Dichloroethene - Colorless, oily liquid. Specific gravity 1.21.

Trichloroethene - Colorless liquid with a chloroform-like odor. Specific gravity 1.46.

1,4 Dichlorobenzene - Colorless or white crystalline, water - soluble solid with a mothball like odor. Specific gravity 1.25.

3.3 Potential Exposure Pathways

This area is served by municipal water and no active supply wells are in the vicinity of the site. There are no surface water intakes for public water within 0.5 miles of the site.

Long Branch Creek flows through the site in a north to south direction and has been identified as a potential receptor. Water samples were collected from the creek during the limited Phase II assessment of the Draper Facility conducted by Triad Environmental Consultants. These water samples were collected a location on the site north of MW-21, and at a downgradient location where the creek exits the property. These samples were analyzed by EPA Method 601 along with other parameters. The results of these analyses indicated a concentration of 1 part per billion of Tetrachloroethene at the sampling point near MW-21 (See Figure 3). All targeted compounds were below the laboratory detection limits at the downgradient sampling location. Another sampling of Long Branch Creek was also conducted on January 29, 1993. During the second sampling event, the creek was sampled at a location near MW-22 where it enters the Draper Property at the northern boundary. This sample was analyzed by EPA Method 624 and all targeted compounds were below the laboratory detection limits. Based upon these results, impact to the creek appears to be minimal at this time. Also, the risk of human exposure

appears to be minimal at this time.

4.0 REMEDIAL ALTERNATIVES

The remedial options that have been considered include:

1) Remediation by groundwater recovery and discharge to the sanitary sewer.
2) Remediation by groundwater recovery, treatment and recirculation.
3) In Situ remediation (Air sparging).
4) Passive remediation through natural degradation with continued monitoring.

Since five (5) distinct areas of contamination have been identified, this CAP will address each area in the numerical order shown on Figure 3. The following lists the recommended remedial option and the rationale for each area:

Area 1 - This area is located on the northern boundary of the site. The recommended remedial option in this area is air sparging. The contamination appears to be disseminated vertically to a depth of at least 78 feet. Capturing a disseminated contaminant plume of this nature in a groundwater recovery system would be difficult, whereas air sparging will be more effective through the entire groundwater column. The primary contaminant in this area is Tetrachloroethane, which degrades to form vinyl chloride in anaerobic environments. Air sparging would provide oxygen to the system and prevent the formation of an environment conducive to the formation of vinyl chloride.

Area 2 - This area is located in the northeastern portion of the site. Since the contaminant levels in this area do not exceed the groundwater standards, it is recommended that this area be periodically monitored.

Area 3 - This area is located in the southwestern portion of the site. Air sparging is recommended as the remedial option in this area. Capturing a disseminated contaminant plume of this nature in a groundwater recovery system would be difficult, whereas air sparging will be more effective through the entire groundwater column. The primary contaminant in this area is Tetrachloroethane, which degrades to form vinyl chloride in anaerobic environments. Air sparging would provide oxygen to the system and prevent the formation of an environment conducive to the formation of vinyl chloride.

Area 4 - This area is located adjacent to the western portion of the Draper Corporation building. The contamination in this area is low levels of chlorinated hydrocarbons widely dispersed in the area. It is proposed to recover groundwater from the existing monitor wells in the area and discharge into the sanitary sewer. Additional larger diameter recovery wells may be added in the future. It is believed that this strategy will provide the most cost effective approach in remediation of the groundwater in this area.

Area 5 - This area is defined as the area in and adjacent to the flood plain of Long Branch Creek. Monitor wells MW-12, MW-21 and MW-22 are located in this area. The contamination in this

area consists of low levels of chlorinated hydrocarbons. Because of the low level of contamination, the presence of underground utilities, and the hydrogeology of this area, it is unlikely that any active remediation system would be effective in this area. Therefore, it is recommended that passive remediation through natural degradation with continued monitoring be adopted in this area. If monitoring reveals a significant increase in the contamination levels in this area, one of the other types of remediation will be used to treat this area.

5.0 PROPOSED CORRECTIVE ACTION PLAN

5.1 Overview

Areas 1 and 3 - The proposed initial plan of action is to install a single air sparge point in the vicinity of monitor wells MW-16 and MW-20. After initial monitoring is performed with the single sparge point, additional air injection points can be added if necessary. Based upon a Triad Environmental Consultants, Inc. telephone conversation of November 15, 1993 with Mr. Richard Sieg of the Winston-Salem Regional office of the North Carolina Division of Environmental Management (NCDEM), no NCDEM permit is required to begin air sparging.

Areas 2 and 5 - The continued monitoring of these areas on a semi-annual basis is the recommended action in these areas.

Area 4 - It is proposed to recover groundwater from existing monitoring wells and discharge the recovered groundwater into the sanitary sewer. Additional larger diameter recovery wells may be added at a later date. Based upon a Triad Environmental

Consultants, Inc. telephone conversation of November 15, 1993 with Mr. Richard Sieg of the Winston-Salem Regional office of the NCDEM, no NCDEM permit is required to begin recovery of groundwater. Although, all wells used for the recovery of groundwater are required to be permitted by the NCDEM.

The City of Greensboro will require a permit prior to discharge of the recovered groundwater. According to correspondence from City of Greensboro Industrial Waste Section personnel, discharge of effluent containing up to 2.13 mg/l Total Toxic Organics into the Greensboro POTW is allowed pending receipt of a permit.

5.2 Conceptual Design

Areas 1 and 3 - Air injection is to be accomplished through injection points constructed much the same as monitoring wells. Each sparging point will be constructed of 2 inch Schedule 40 PVC with the bottom 2 feet comprised of 0.010 inch slotted well screen (See Figure 4 for construction details). The sparge points can also be utilized as groundwater monitoring wells. The first sparge points are proposed to be set at a depth of approximately 65 to 75 feet.

Initially, portable air compressors will be utilized for air injection. After data is accumulated through monitoring, the compressors can be selected for permanent duty. Either oil-less compressors will be utilized, or air filtering devices can be utilized with standard compressors to provide "clean" air for injection.

Area 4 - Groundwater recovery is proposed to be accomplished through the existing wells MW-2, MW-6, MW-7, and MW-11. Recovered groundwater is to be routed through a settling tank and discharged to the sanitary sewer.

5.3 System Security

The above-ground system components are to be housed in locked enclosures. Connections to the recovery wells and sparge points are to be routed in underground trenches. The recovery wells and sparge points are to equipped with locking well covers. All motors, conduit and electrical wiring will be constructed as per National Electrical Code requirements. Intrinsically safe motors, blowers and other equipment will be utilized as necessary. Automatic shutoff systems will be installed in case of system malfunction.

5.5 System Limitations

Localized non-homogeneous subsurface conditions may cause isolated areas where complete remediation may not be achieved. Flow rates in sparge points and recovery wells can be adjusted throughout the life of the project to promote turbulence and variability of flow patterns in the subsurface. Also, aeration may cause oxidation of some metals and fouling of the system by inorganic precipitation. These limitations are to be dealt with by follow-up monitoring and adjustments to the remediation system.

5.6 System Operation and Maintenance

The systems will be monitored daily for the first five days after start up. Thereafter, system checks can be made on a weekly basis. Maintenance can be performed as necessary to service malfunctions. Because automatic controls are to be utilized, operation and maintenance should be minimal after initial start up.

As mentioned above, aeration may cause oxidation of some metals and fouling of some system components by inorganic precipitation may occur. The systems will be checked for fouling, and additional adjustments of sparge point locations and pressures may be performed if necessary.

5.7 Follow-up Monitoring and System Evaluation

Follow-up monitoring is to include sampling of the groundwater monitoring wells on a semi-annual basis. Also, influent from the recovery wells and system effluent will be sampled semi-annually. The proposed laboratory analyses are EPA Method 624, dissolved oxygen and pH.

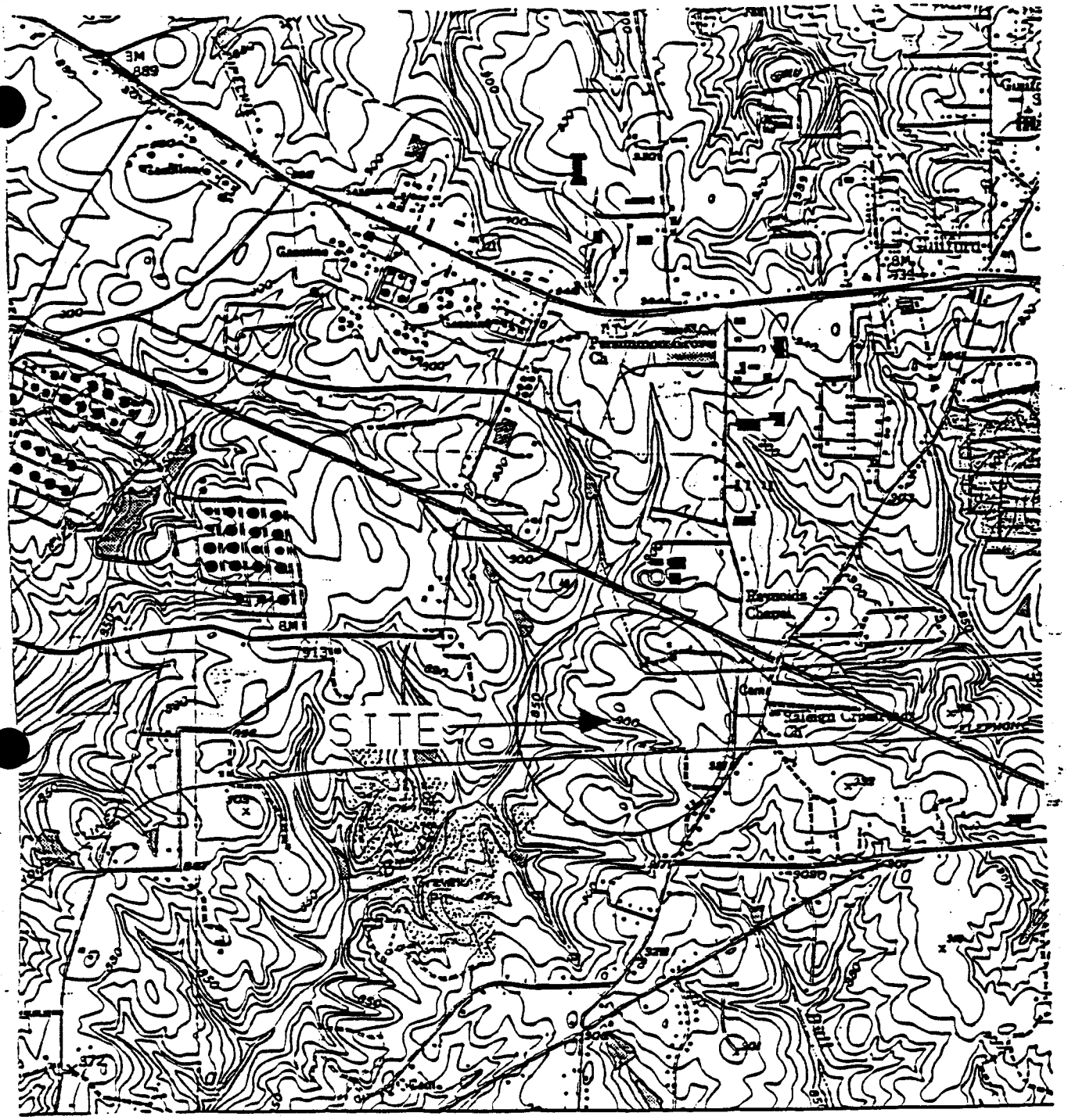

FIGURE 1 - SITE MAP

GUILFORD QUADRANGLE

1951 - PHOTOREVISED 1968

0 2000 4000 6000

SCALE : 1" = 2000'

DRAPER CORPORATION
5644 HORNADAY ROAD
GREENSBORO, NC

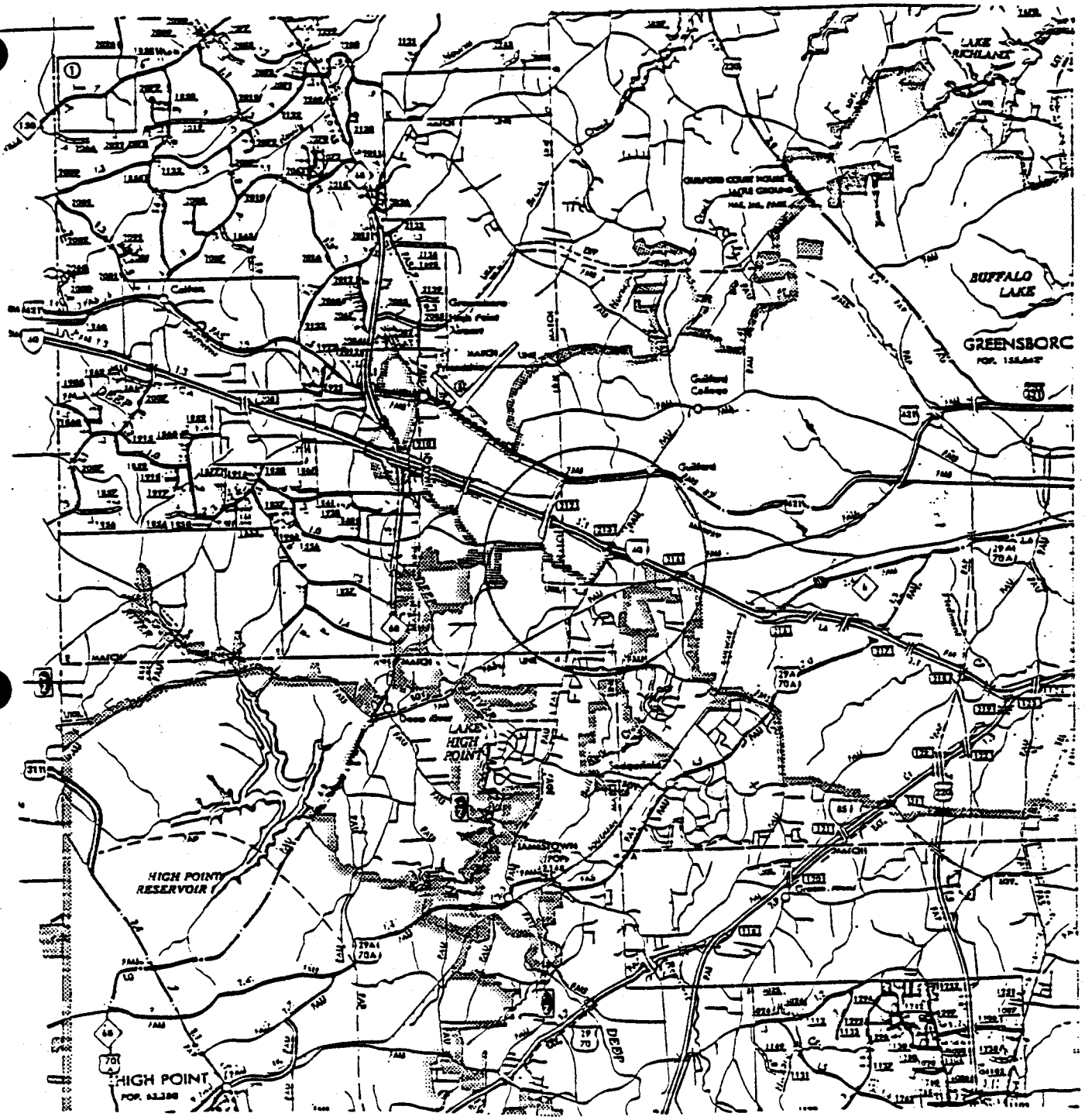

FIGURE 2 - COUNTY ROAD MAP

2 0 2 4

1" = 2 MILES

DRAPER CORPORATION
5644 HORNADAY ROAD
GREENSBORO, NC

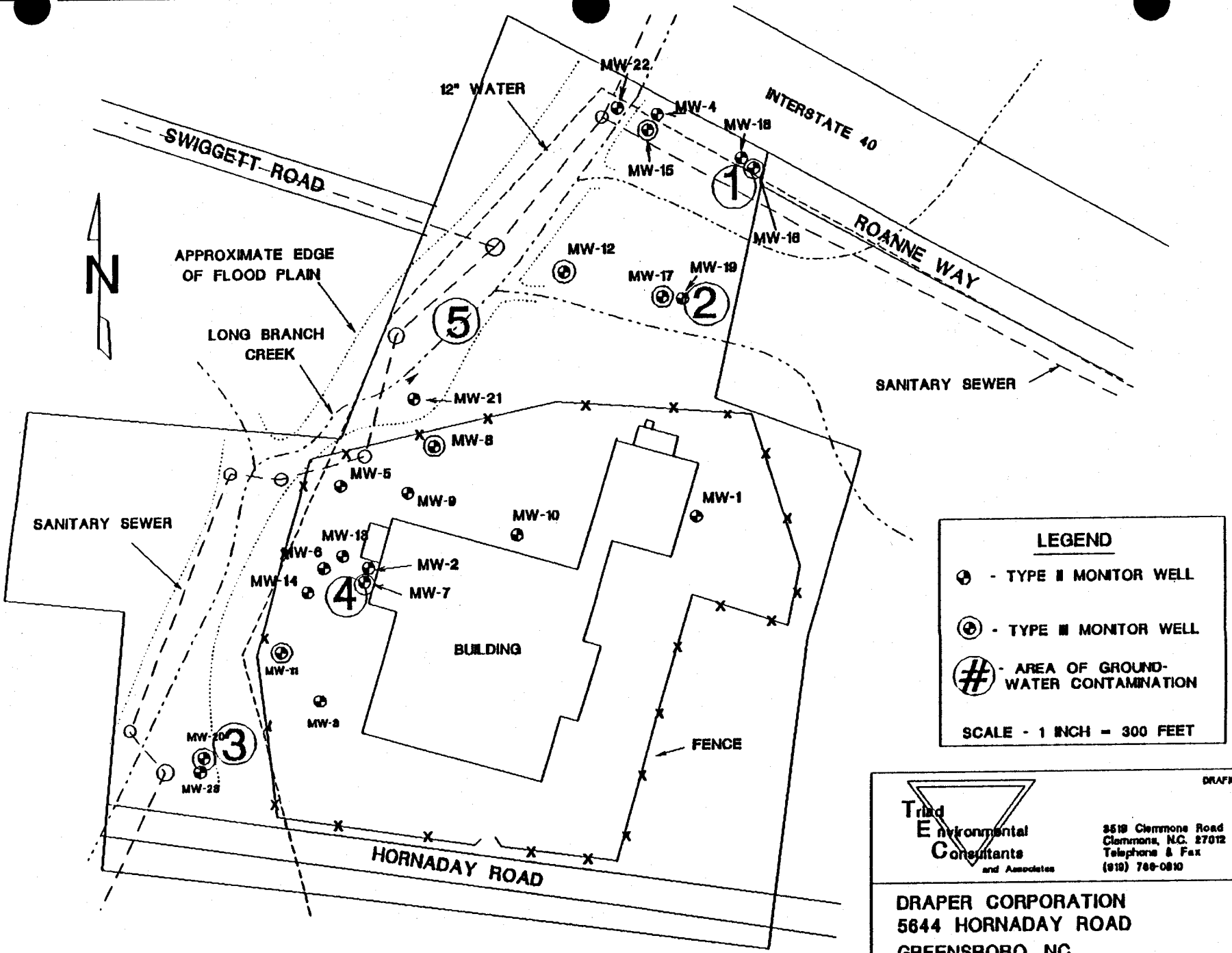

FIGURE 3 - MONITOR WELL LOCATIONS AND CONTAMINATION AREAS

FIGURE 4 - DETAILS OF SPARGE POINT CONSTRUCTION

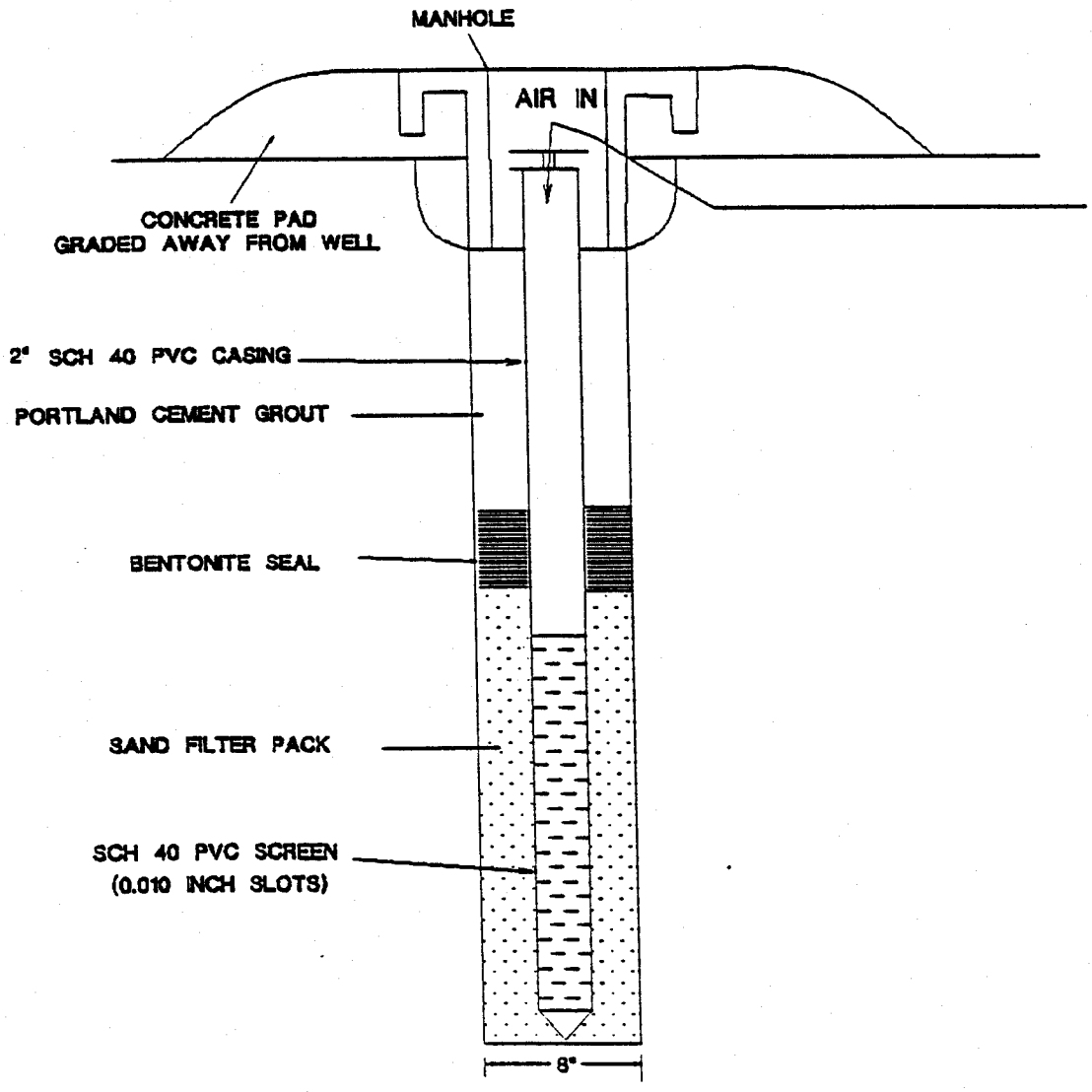

DRASPGPT

TRIAD
ENVIRONMENTAL
CONSULTANTS, INC.
AND ASSOCIATES

3518 CLEMMONS ROAD
CLEMMONS, NC 27012
TELEPHONE AND FAX
(919) 766-0810

TABLE 1 - SUMMARY OF LABORATORY RESULTS - EPA METHOD 624- DRAPER CORPORATION - GREENSBORO, NC

MONITOR WELL NUMBER	SAMPLING DATES								
	12-02-92	12-16-92	01-08-93	01-25-93	01-29/31-93	02-03-93	05-27/28-93	07-29/30-93	10-20/21-93
MW-1	BDL	NS	NS	NS	NS	NS	NS	NS	NS
MW-2	4-CL 30-PCE 1-TCE	31-PCE	NS	NS	NS	NS	43-PCE	6-CL 8-12DCB 64-PCE 7-14DCB 8-111TCA	6-12DCB 6-111TCA 79-PCE 5-TCE
MW-3	DRY WELL →								
MW-4			12-PCE	NS	BDL	NS	17-PCE	13-CL 76-T 9-TCA	140-T
MW-5			BDL	NS	NS	NS	NS	8-111TCA	6-11DCE 5-111TCA
MW-6				NS	22-CDCE	NS	NS	10-111TCA	BDL
MW-7				BDL	NS	NS	NS	22-PCE	31-PCE
MW-8				19-12CDCE	20-CDCE	NS	BDL	14-111TCA	BDL
MW-9					21-CDCE	NS	BDL	8-11DCE 8-111TCA	BDL
MW-10					BDL	NS	NS	NS	
MW-11						9-14DCB	7-PCE 7-TCE 11-111TCE	6-14DCB 6-11DCE 12-PCE 14-TCE 19-111TCA	5-11DCE 6-111TCE 8-PCE 9-TCE
MW-12						8-PCE	13-PCE	6-11DCE 5-111TCA 18-PCE	18-PCE
MW-13							NS	BDL	8-111TCE
MW-14							NS	BDL	DRY
MW-15							BDL	BDL	6-T 5-111TCE
MW-16								8-11DCE 6-111TCA 35-PCE	29-PCE 6-111TCA
MW-17								6-111TCA	5-111TCA
MW-18								16-CL 13-111TCA 58-11DCE 197-PCE	17-CL 7-111TCA 68-11DCE 6-112TCA 107-PCE
MW-19								94-111TCA	BDL
MW-20								28-CT 24-11DCA 19PCE 7-CL 81-TCFM 110-11DCE 133-111TCA	31-CT 26-11DCA 23-PCE 8-CL 63-TCFM 110-11DCE 136-111TCA
MW-21								26-11DCE 18-TCE 6-111TCA	19-11DCE 10-TCE
MW-22								22-111TCA 10-PCE	14-PCE
MW-23								47-DCE 140-111TCA	DRY

KEY

CL = CHLOROFORM
CT = CARBON TETRACHLORIDE
12 DCB = 1,2 DICHLOROBENZENE
TCE = TRICHLOROETHENE
111 TCA = 1,1,1 TRICHLOROETHANE
PCE = TETRACHLOROETHENE
14 DCB = 1,4 DICHLOROBENZENE
11 DCA = 1,1 DICHLOROETHANE
11 DCE = 1,1 DICHLOROETHENE
12 DCA = 1,2 DICHLOROETHANE
T = TOLUENE
TCFM = TRICHLOROFLUROMETHANE
112 TCE = 1,1,2 TRICHLOROETHANE
CDCE = CIS-1,2-DICHLOROETHENE
BDL = BELOW DETECTION LIMITS
NS = NOT SAMPLED