TRIAD ENVIRONMENTAL CONSULTANTS, INC. AND ASSOCIATES

3519 Clemmons Road
Clemmons, NC 27012
Telephone & Fax
(919) 766-0810

June 30, 1993

Mr. Richard Sieg
NCDEHNR-DEM
8025 North Point Blvd.
Winston-Salem, NC 27106-3203

Re: Reply to Certified Mail P-536 304 129
Letter to William O. Cordes
Draper Corporation, 5644 Hornaday Rd.
Greensboro, NC 27409

Dear Mr. Sieg:

On June 25, 1993, Draper Corporation received a certified letter concerning the May 10, 1993 Comprehensive Site Assessment (CSA) of the former 30,000 gallon No. 4 fuel tank area. This CSA was prepared by Triad Environmental Consultants, Inc. Your letter requests that Draper Corporation respond to concerns that the State has pertaining to the CSA report by July 10, 1993. These items are addressed below.

- The Winston-Salem Regional office views the Draper Facility as having two incidents: the former 30,000 gallon tank area and known groundwater contamination. You reiterated this fact in your letter. Currently, some of the groundwater monitoring wells at the site have been installed as part of the other investigation of the groundwater contamination. The presence of these other wells has led to some confusion. A listing of the wells and the project associated with each well is attached.

- Laboratory results for MW-8 are located within the May 10, 1993 CSA report and are not discussed. These results were not discussed in the report as it is our opinion that the discovery of cis - 1, 2 Dichloroethene is related to the other "known" groundwater contamination at the site. These results will be addressed in the other CSA report your office is requiring.

- Enclosed are the boring logs from the property assessment work (Borings Nos. 1 - 12), and boring logs from the CSA work around the 30.000 gallon tank area (Borings XB1 - XB6). Also enclosed are monitoring well construction details and an updated site diagram showing the locations of monitoring wells MW-1 through MW-15.

- In response to the question about the screened interval of MW-6 and its ability to detect "floaters". There has never been any free floating product observed associated with the 30,000 gallon No. 4 fuel oil tank, although water was present in the tank excavation upon removal of the tank. The purpose of installing monitoring wells MW-6, MW-13, and MW-14, all located around the periphery of the former excavation area was to detect any **dissolved** phase groundwater contamination associated with the release of No. 4 fuel oil, not floating product. The screened interval of these three (3) wells, while not always straddling the water table during recent fluctuations, are completely appropriate to detect any dissolved phase contamination in the former excavation area. Until backfilling, water had ponded in the excavation area. This may have contributed to the top of the screened intervals of wells MW-6 and MW-13 being located below the water table during the last sampling event.

- The screening of monitoring well MW-2 was also questioned. Well MW-2 was the first monitoring well installed in this area, with very limited knowledge of the depth to the water table. This well was not installed associated with either "incident". It was installed during the investigation of the site conducted for property transfer, to assess the groundwater quality adjacent to the northwestern side of the Draper facility.

- Monitoring well MW-7 is a Type III well (Vertical extent type) installed adjacent to MW-2. This well was installed in response to the detection of Tetrachloroethene in MW-2.

- It was stated that the assessment of the groundwater contamination seemed incomplete, as no monitoring well was placed in the center of the source area. Until recently, the excavation remained open, preventing drill rig access to this area. The numerous underground and overhead utilities, especially the buried fire protection lines, greatly restricted the placement of boring and monitoring wells. Prior to the backfilling of the excavation (June 17-25), two (2) penetrations were made through the 2 foot thick concrete anchor pad in the center of the former tank area. Two (2) wells were installed in these penetrations and screened to be used as aeration points. If necessary, water samples may be collected from these aeration points. Sampling of these points should provide information as to the presence of any dissolved phase groundwater contamination in this area.

- The water supply well located on the site no longer belongs to Draper Corporation, but to Guilford Mills, Inc. We will ask Guilford Mills for permission to abandon this well.

If you have any questions concerning this reply, I may be contacted at the letterhead address or at (919) 766 0810.

Respectfully,

W. Steven Johnson
Triad Environmental Consultants, Inc.

WSJ/mam
encl/

Table 1

Listing of Monitoring Wells and Associated Projects

Draper Corporation
5644 Hornaday Road
Greensboro, North Carolina

Monitoring Well No.	Project
1	Property Assessment
2	Property Assessment
3	Property Assessment
4	Expanded Prop. Assessment Initial investigation northern portion of Draper property
5	Expanded Prop. Assessment Additional investigation to determine horizontal extent of Tetrachloroethene discovered in MW-2.
6	Initial well installed adjacent to 30,000 gallon No. 4 fuel oil tank area.
7	Expanded Prop. Assessment Initial Type III well, installed adjacent to MW-2.
8	Expanded Prop. Assessment Type III well, installed to assess possibility of bedrock contamination northern portion of plant area
9	Expanded Prop. Assessment Installed to assess possible contamination of water table aquifer northern portion of plant area
10	Expanded Prop. Assessment Installed to assess possible contamination of water table aquifer northern portion of plant area

Table 1

Listing of Monitoring Wells and Associated Projects

Draper Corporation
5644 Hornaday Road
Greensboro, North Carolina

Monitoring Well No.	Project
11	Expanded Prop. Assessment Type III well Installed to assess possible contamination of bedrock aquifer western portion of plant area
12	Expanded Prop. Assessment Installed to assess possible contamination of water table aquifer
13	Installed as part of CSA 30,000 g. UST area
14	Installed as part of CSA 30,000 g. UST area
15	Type III well, adjacent to MW-4 Installed to assess vertical extent of Tetrachloroethene in MW-4

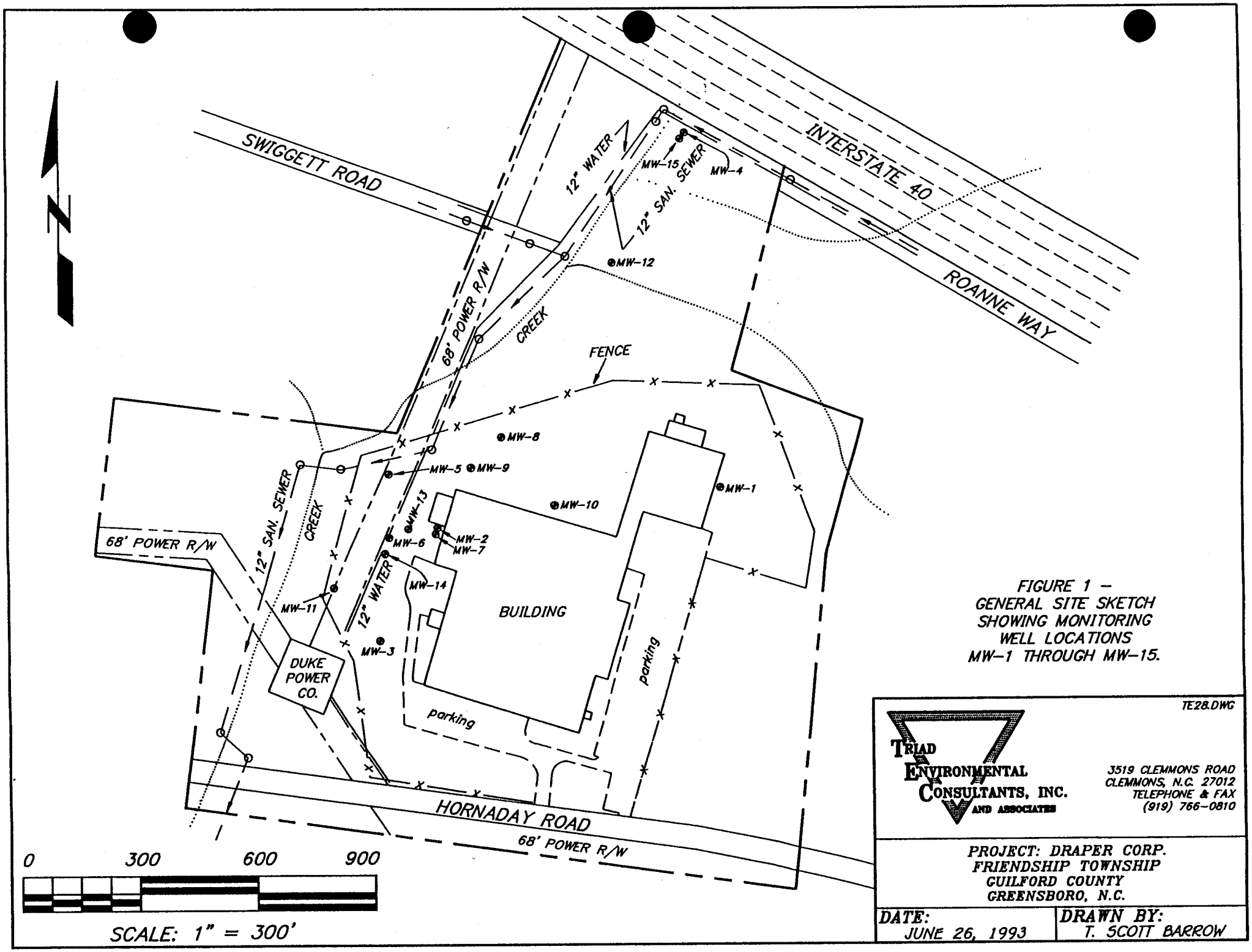

FIGURE 1 – GENERAL SITE SKETCH SHOWING MONITORING WELL LOCATIONS MW-1 THROUGH MW-15.

JOB NAME DRAPER CORPORATION

WELL NUMBER MW-1

LOCATION GREENSBORO, NC

DATE OF INSTALLATION 11-23-92

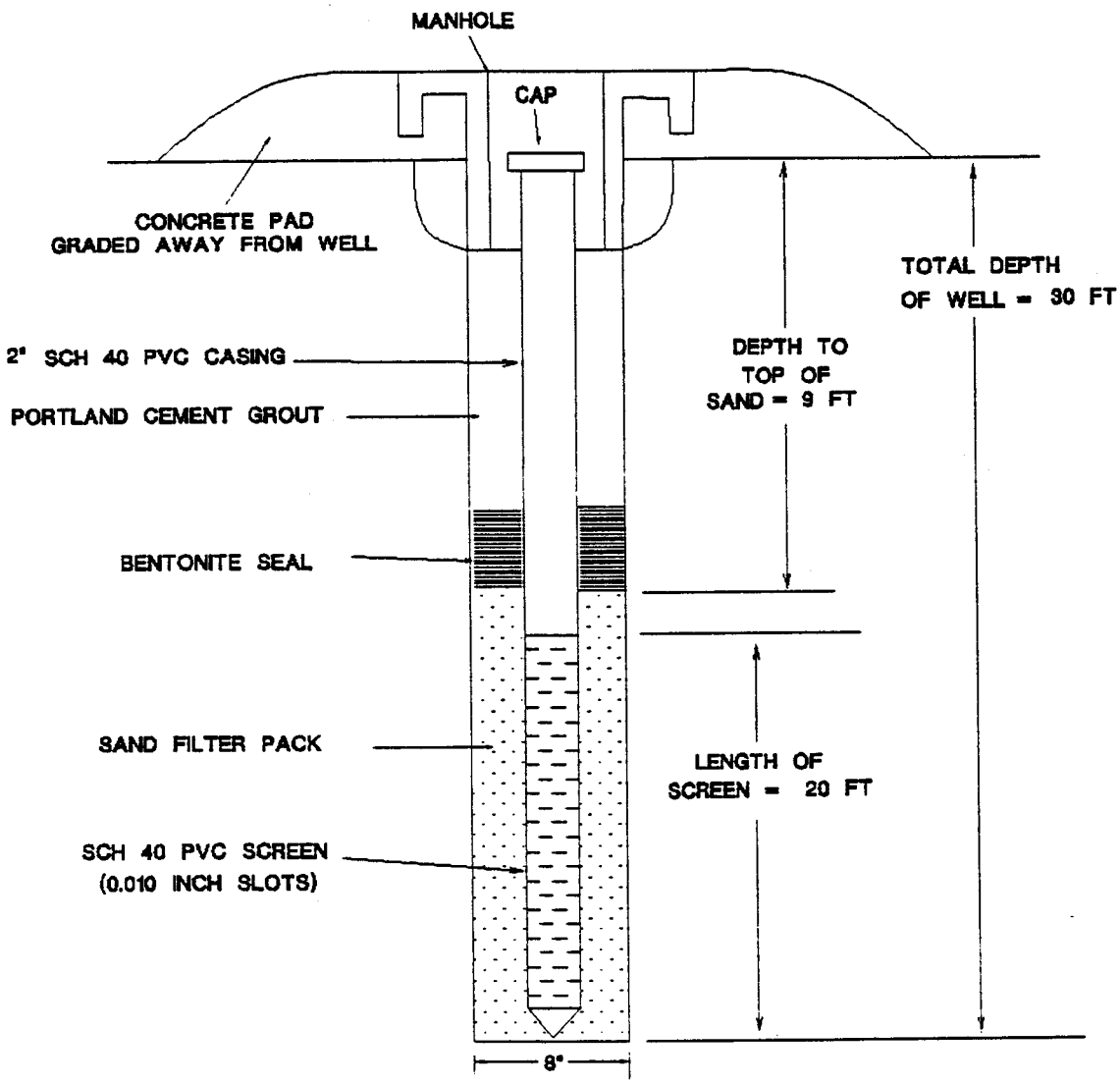

TYPE II MONITOR WELL	TRIAD ENVIRONMENTAL CONSULTANTS, INC. AND ASSOCIATES 3519 CLEMMONS ROAD CLEMMONS, NC 27012 TELEPHONE AND FAX (919) 766-0810	MONITORING WELL INSTALLATION RECORD

JOB NAME DRAPER CORPORATION

WELL NUMBER MW-2

LOCATION GREENSBORO, NC

DATE OF INSTALLATION 11-23-92

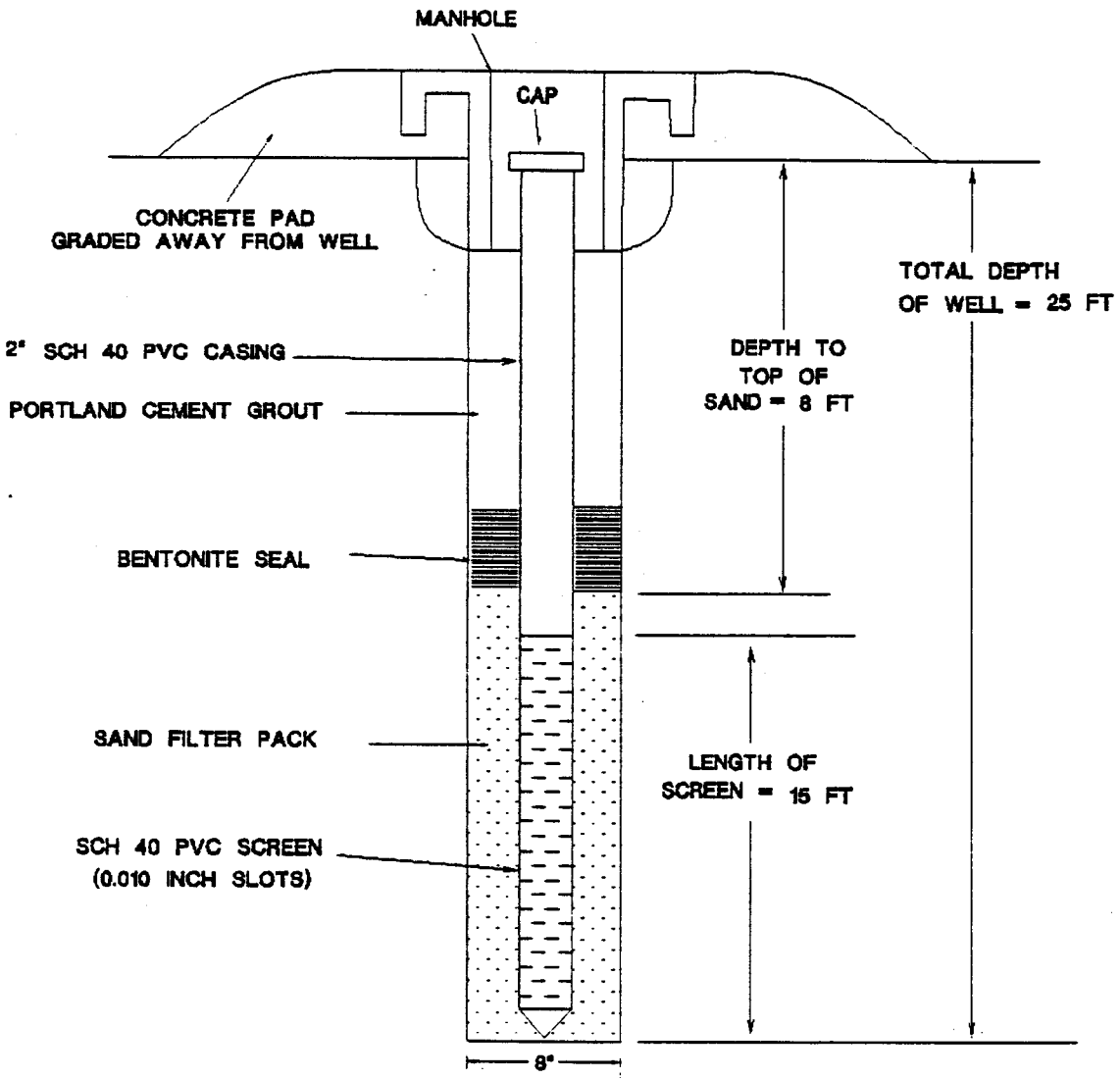

TYPE II MONITOR WELL	T RIAD E NVIRONMENTAL C ONSULTANTS, INC. AND ASSOCIATES 3519 CLEMMONS ROAD CLEMMONS, NC 27012 TELEPHONE AND FAX (919) 766-0810	MONITORING WELL INSTALLATION RECORD

JOB NAME DRAPER CORPORATION

WELL NUMBER MW-3

LOCATION GREENSBORO, NC

DATE OF INSTALLATION 11-25-92

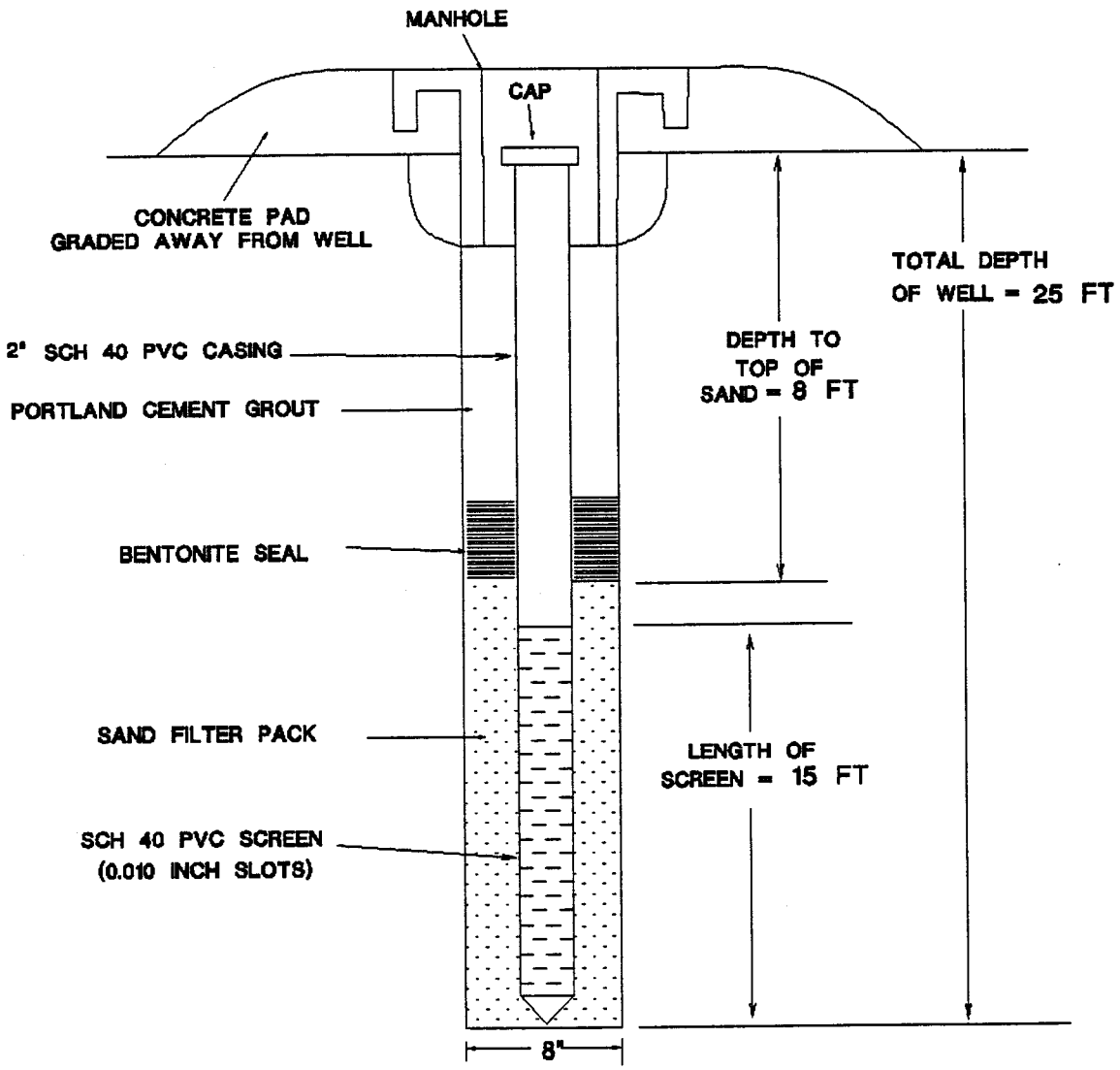

TYPE II MONITOR WELL	TRIAD ENVIRONMENTAL CONSULTANTS, INC. AND ASSOCIATES 3519 CLEMMONS ROAD CLEMMONS, NC 27012 TELEPHONE AND FAX (919) 766-0810	MONITORING WELL INSTALLATION RECORD

JOB NAME DRAPER CORPORATION

WELL NUMBER MW-4

LOCATION GREENSBORO, NC

DATE OF INSTALLATION 1-7-93

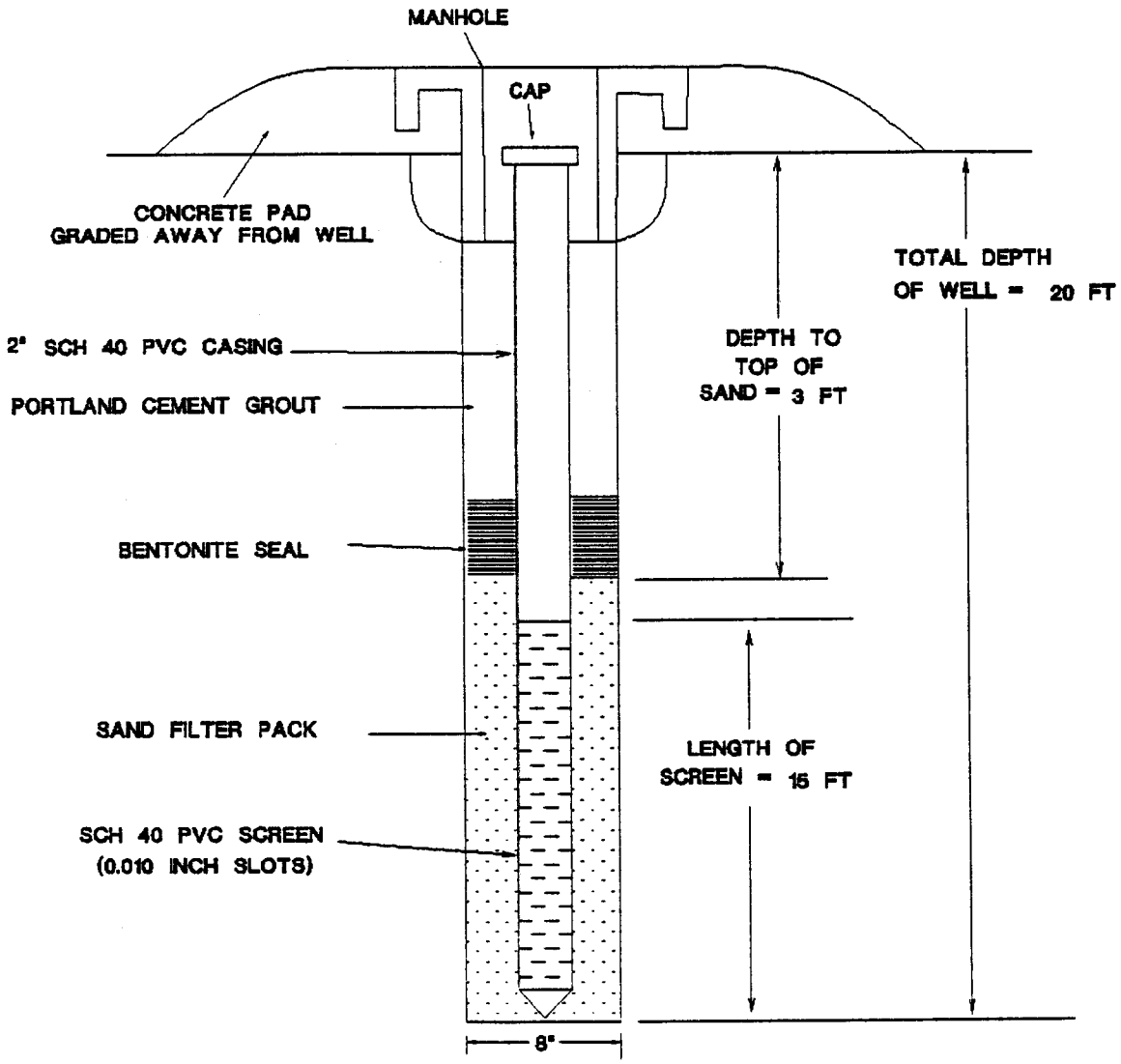

TYPE II

MONITOR

TRIAD ENVIRONMENTAL CONSULTANTS, INC. AND ASSOCIATES

3518 CLEMMONS ROAD
CLEMMONS, NC 27012
TELEPHONE AND FAX
(919) 766-0810

MONITORING WELL

INSTALLATION RECORD

JOB NAME DRAPER CORPORATION

WELL NUMBER MW-5

LOCATION GREENSBORO, NC

DATE OF INSTALLATION 10-25-92

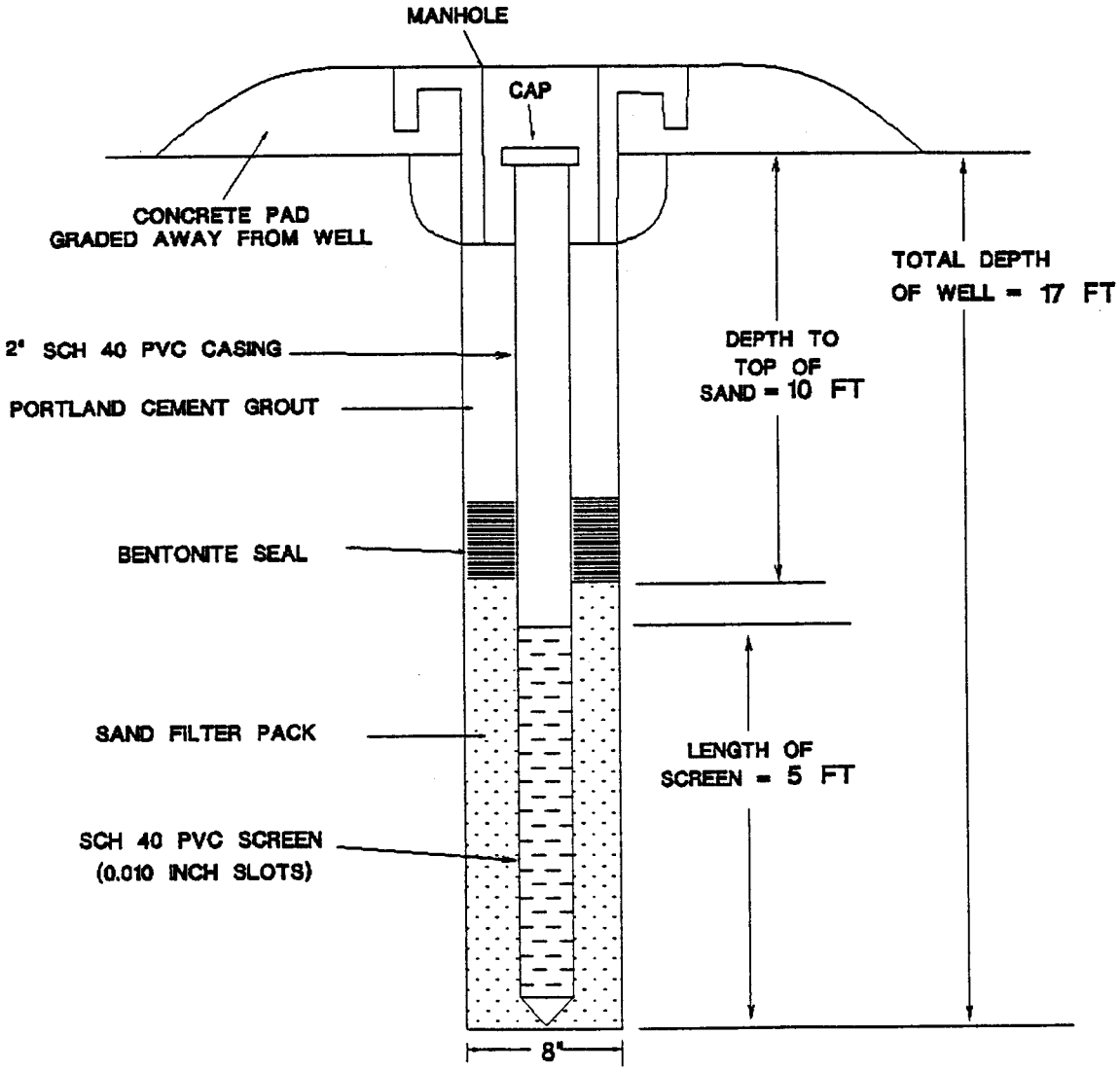

TYPE II MONITOR WELL	TRIAD ENVIRONMENTAL CONSULTANTS, INC. AND ASSOCIATES 3519 CLEMMONS ROAD CLEMMONS, NC 27012 TELEPHONE AND FAX (919) 766-0910	MONITORING WELL INSTALLATION RECORD

JOB NAME DRAPER CORPORATION

WELL NUMBER MW-6

LOCATION GREENSBORO, NC

DATE OF INSTALLATION 1-7-93

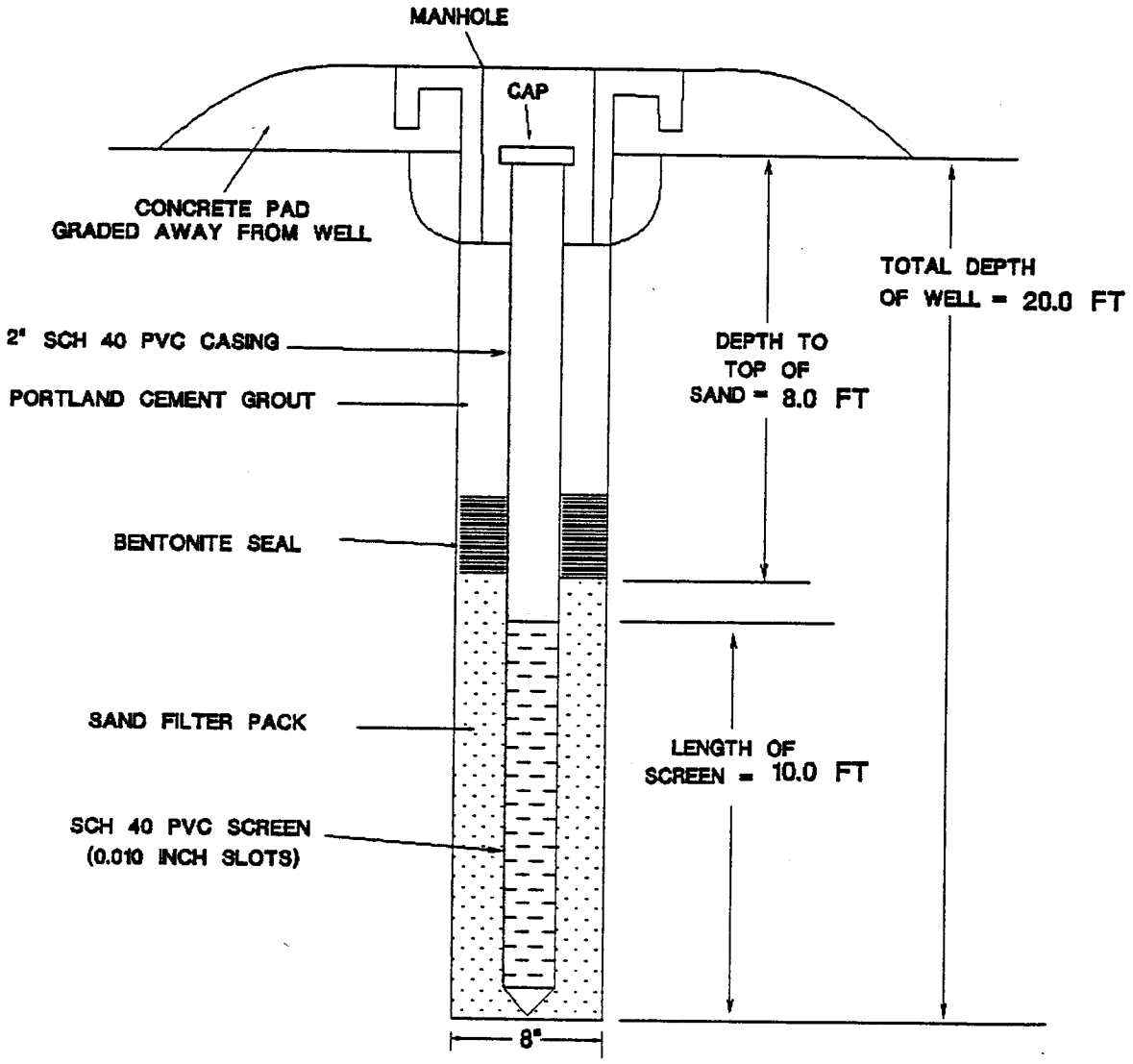

TYPE II MONITOR WELL	T RIAD E NVIRONMENTAL C ONSULTANTS, INC. AND ASSOCIATES 3519 CLEMMONS ROAD CLEMMONS, NC 27012 TELEPHONE AND FAX (919) 766-0810	MONITORING WELL INSTALLATION RECORD

JOB NAME DRAPER CORPORATION

WELL NUMBER MW-7 DATE OF INSTALLATION 1/18-19/93

LOCATION GREENSBORO, NC

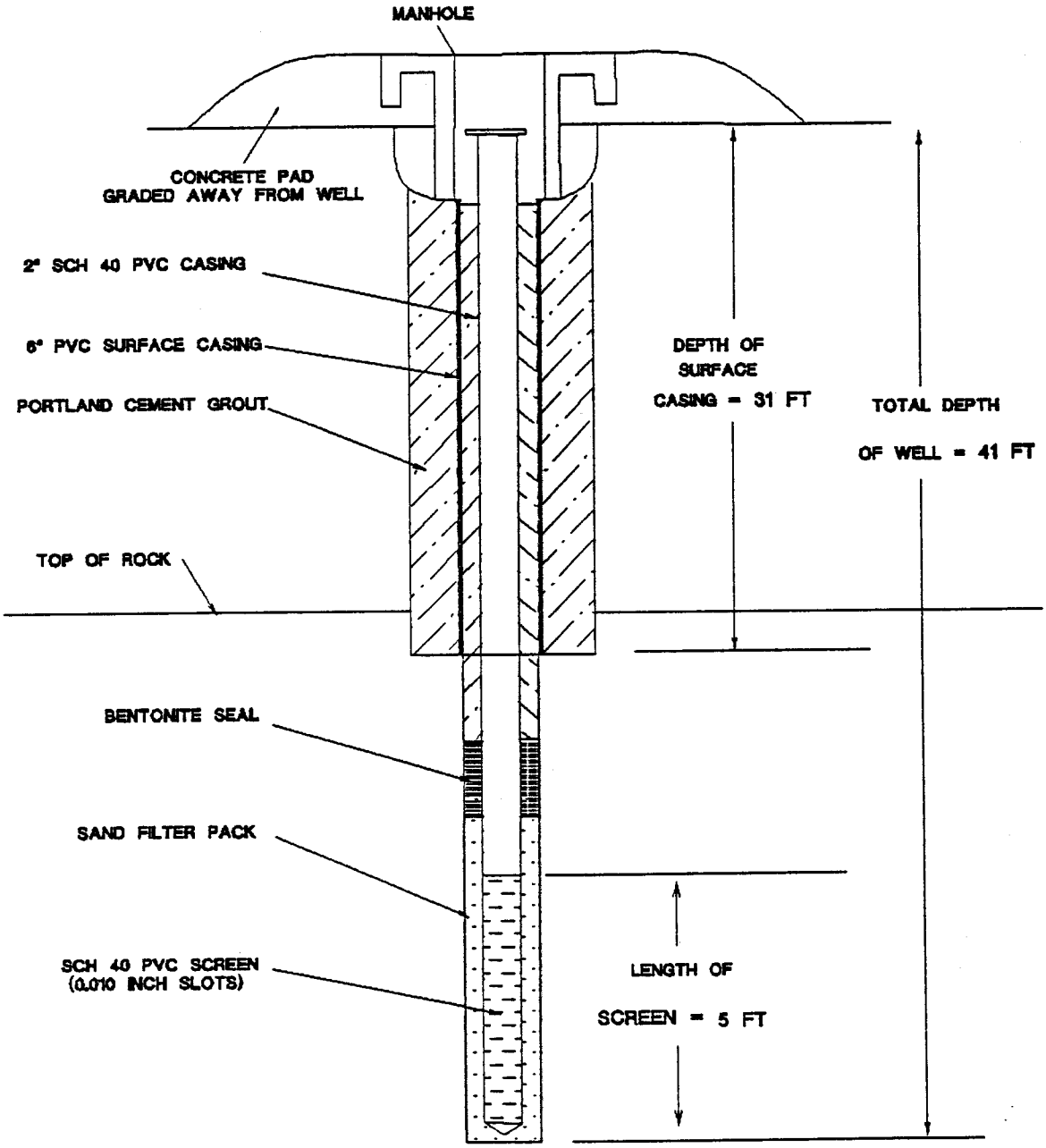

TYPE III MONITOR WELL	TRIAD ENVIRONMENTAL CONSULTANTS, INC. AND ASSOCIATES 3519 CLEMMONS ROAD CLEMMONS, NC 27012 TELEPHONE AND FAX (919) 766-0810	MONITORING WELL INSTALLATION RECORD

JOB NAME DRAPER CORPORATION

WELL NUMBER MW-8 DATE OF INSTALLATION 1/18-19/93

LOCATION GREENSBORO, NC

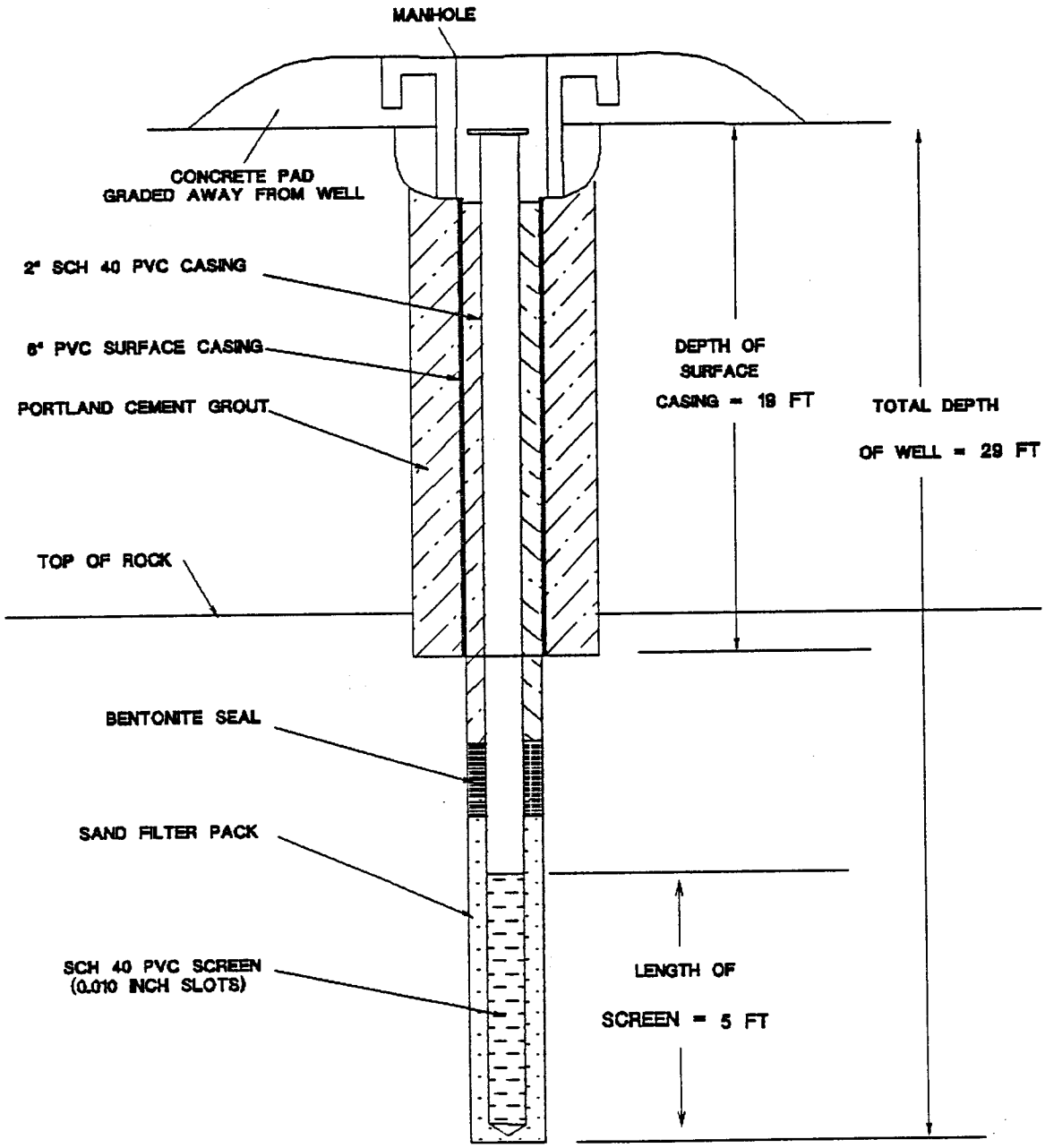

TYPE III MONITOR WELL	TRIAD ENVIRONMENTAL CONSULTANTS, INC. AND ASSOCIATES 3519 CLEMMONS ROAD CLEMMONS, NC 27012 TELEPHONE AND FAX (919) 766-0810	MONITORING WELL INSTALLATION RECORD

JOB NAME DRAPER CORPORATION

WELL NUMBER MW-9

LOCATION GREENSBORO, NC

DATE OF INSTALLATION 1-30-93

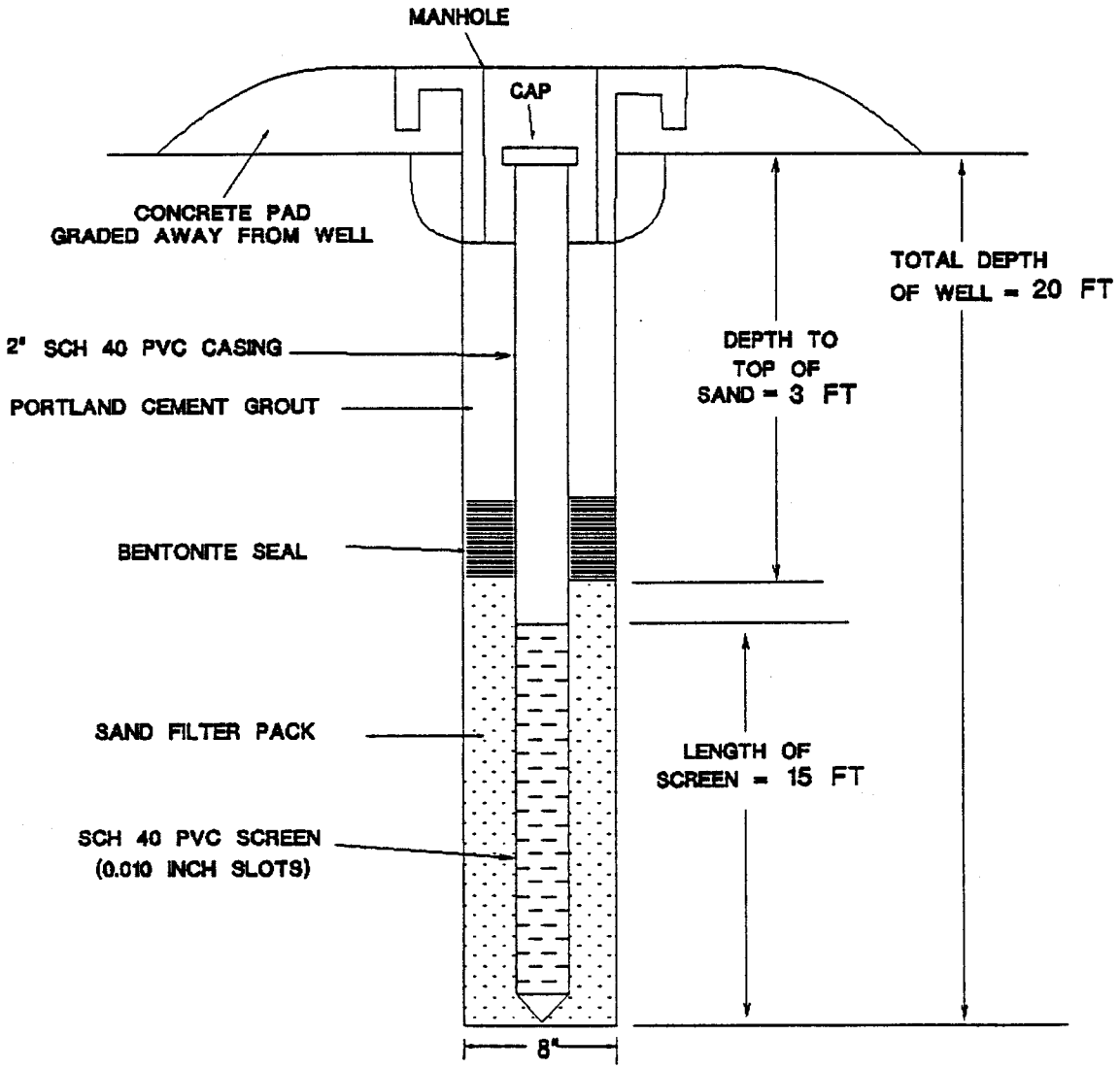

TYPE II MONITOR WELL	TRIAD ENVIRONMENTAL CONSULTANTS, INC. AND ASSOCIATES 3519 CLEMMONS ROAD CLEMMONS, NC 27012 TELEPHONE AND FAX (919) 766-0810	MONITORING WELL INSTALLATION RECORD

JOB NAME DRAPER CORPORATION

WELL NUMBER MW-10

LOCATION GREENSBORO, NC

DATE OF INSTALLATION 1-30-93

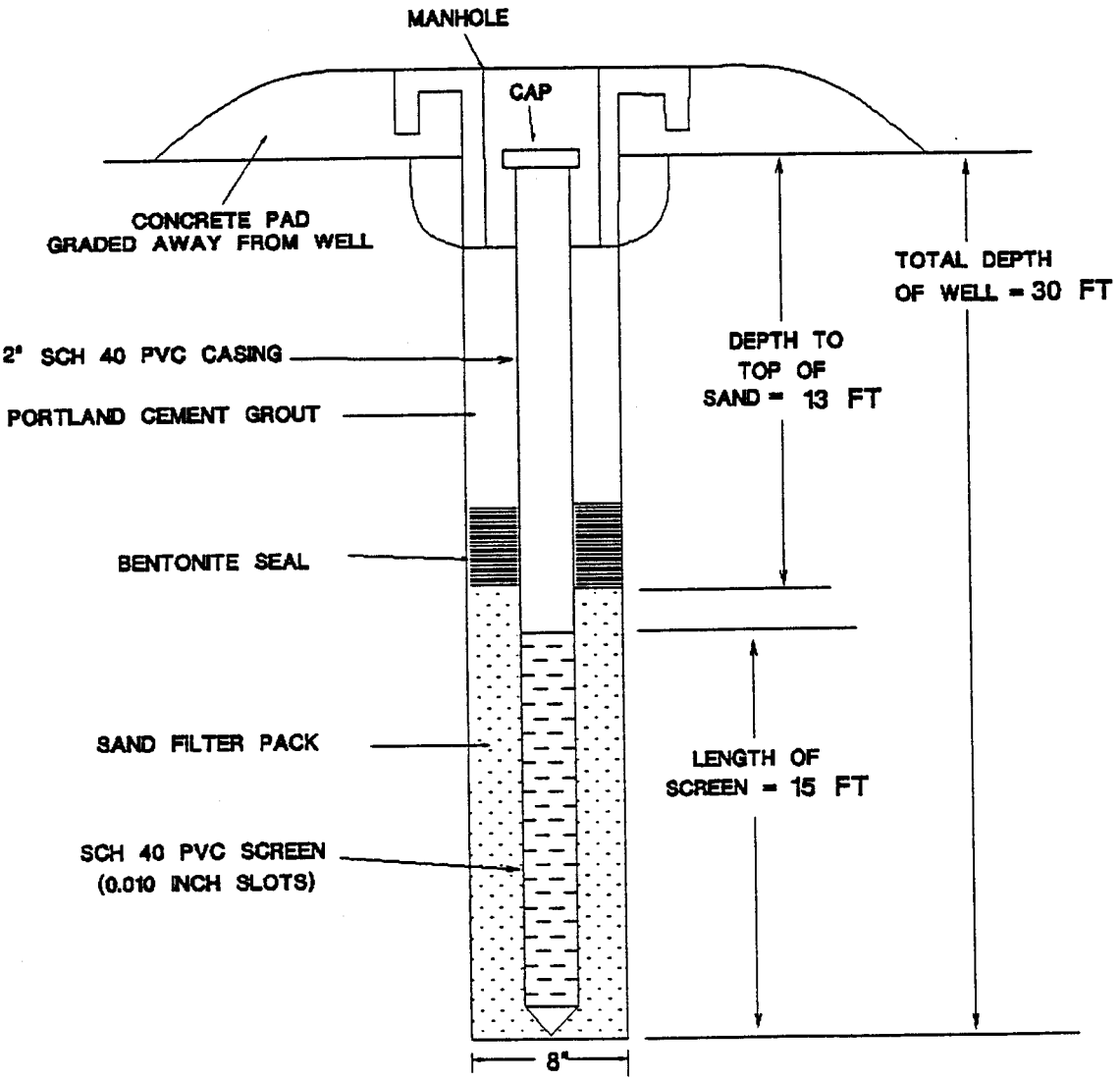

TYPE II MONITOR WELL	T RIAD E NVIRONMENTAL C ONSULTANTS, INC. AND ASSOCIATES 3519 CLEMMONS ROAD CLEMMONS, NC 27012 TELEPHONE AND FAX (919) 766-0810	MONITORING WELL INSTALLATION RECORD

JOB NAME DRAPER CORPORATION

WELL NUMBER MW-11 DATE OF INSTALLATION 2/1-2/93

LOCATION GREENSBORO, NC

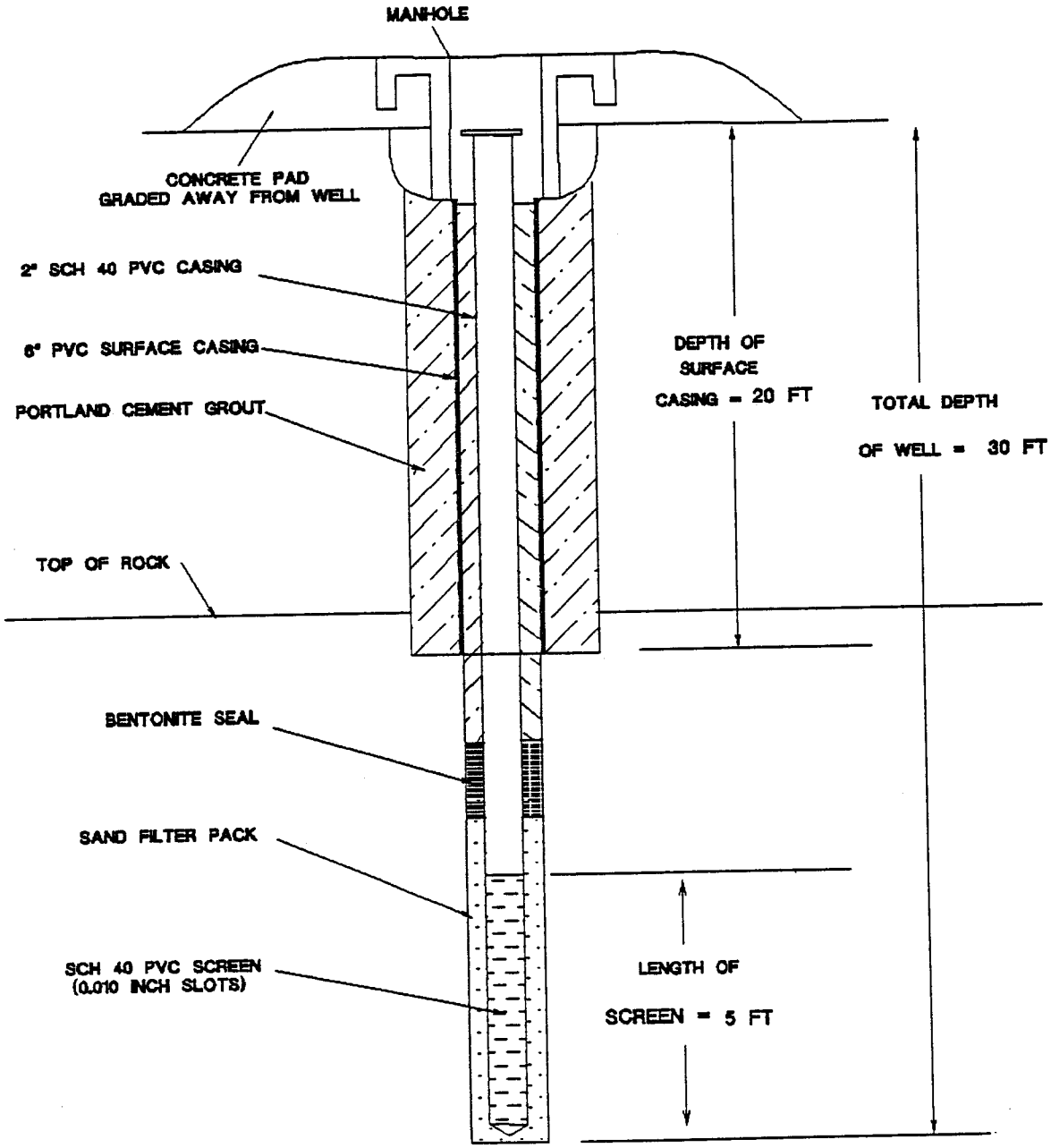

TYPE III MONITOR WELL	T ROAD E NVIRONMENTAL C ONSULTANTS, INC. AND ASSOCIATES 3519 CLEMMONS ROAD CLEMMONS, NC 27012 TELEPHONE AND FAX (919) 766-0810	MONITORING WELL INSTALLATION RECORD

JOB NAME DRAPER CORPORATION

WELL NUMBER MW-12 DATE OF INSTALLATION 2/1-2/93

LOCATION GREENSBORO, NC

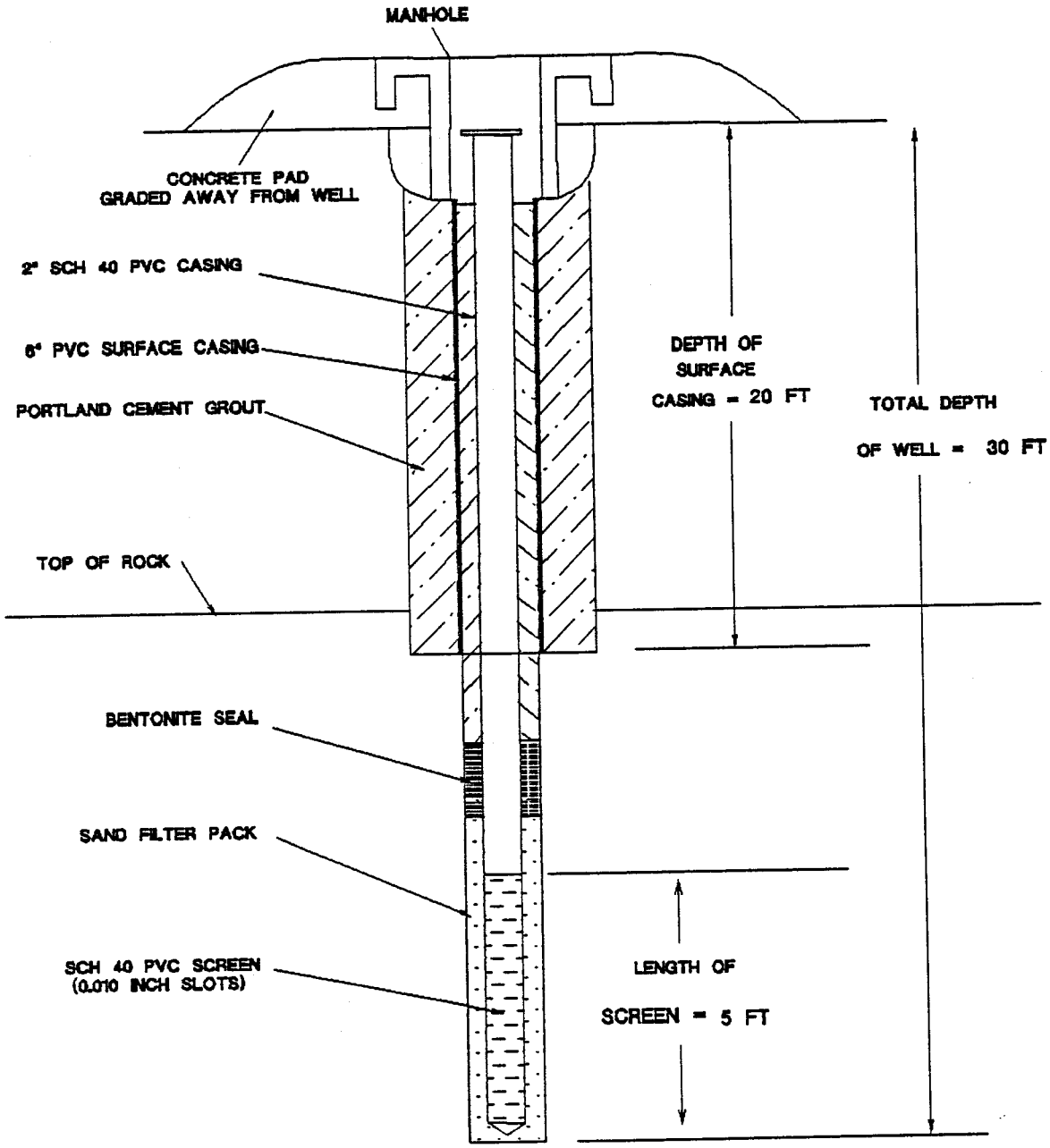

TYPE III MONITOR WELL	T ROAD E NVIRONMENTAL C ONSULTANTS, INC. AND ASSOCIATES 3519 CLEMMONS ROAD CLEMMONS, NC 27012 TELEPHONE AND FAX (919) 766-0810	MONITORING WELL INSTALLATION RECORD

JOB NAME DRAPER CORPORATION

WELL NUMBER MW-13

LOCATION GREENSBORO, NC

DATE OF INSTALLATION 4-29-93

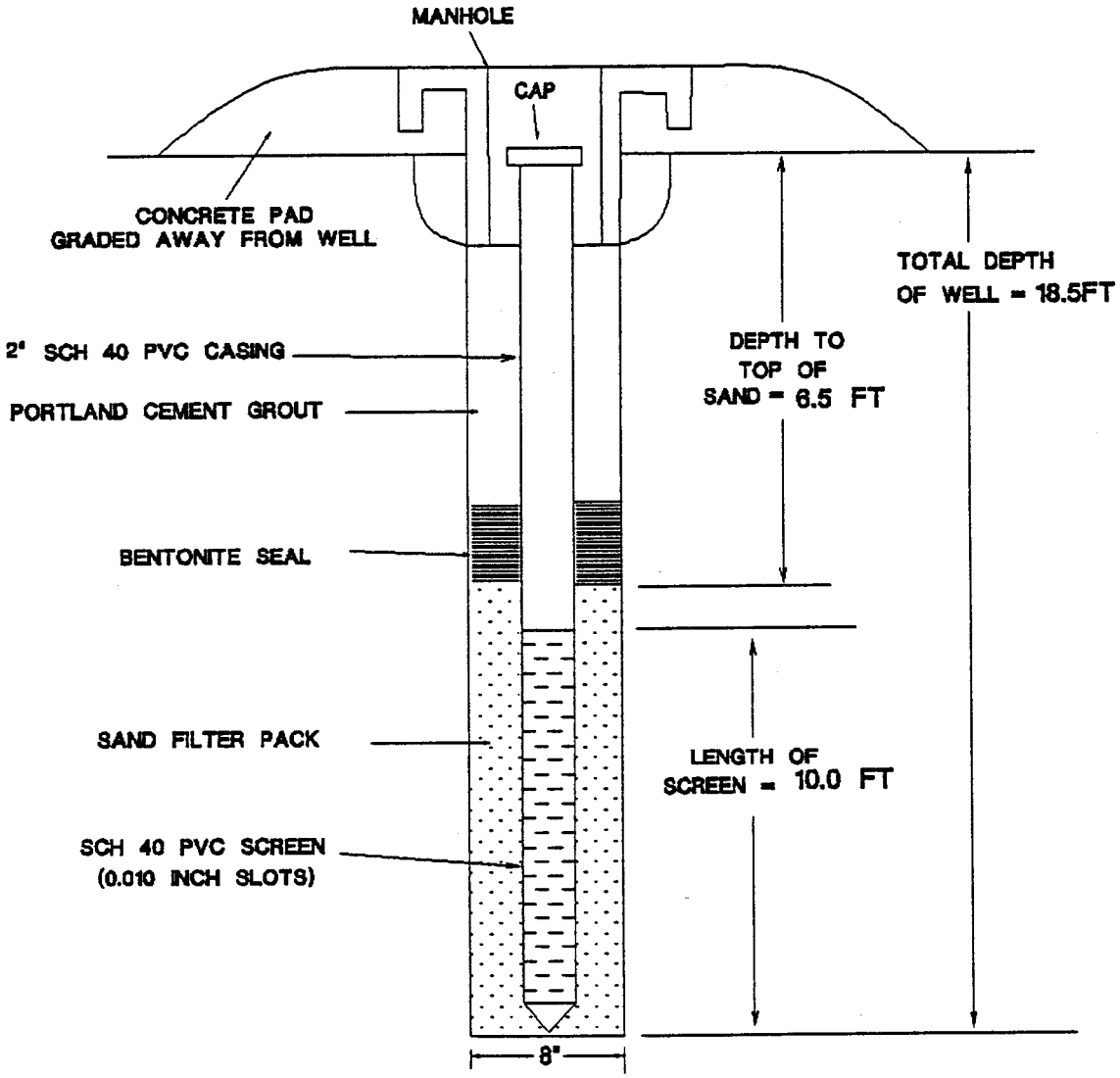

TYPE II MONITOR WELL	TRIAD ENVIRONMENTAL CONSULTANTS, INC. AND ASSOCIATES 3519 CLEMMONS ROAD CLEMMONS, NC 27012 TELEPHONE AND FAX (919) 766-0810	MONITORING WELL INSTALLATION RECORD

JOB NAME DRAPER CORPORATION

WELL NUMBER MW-14

LOCATION GREENSBORO, NC

DATE OF INSTALLATION 4-29-93

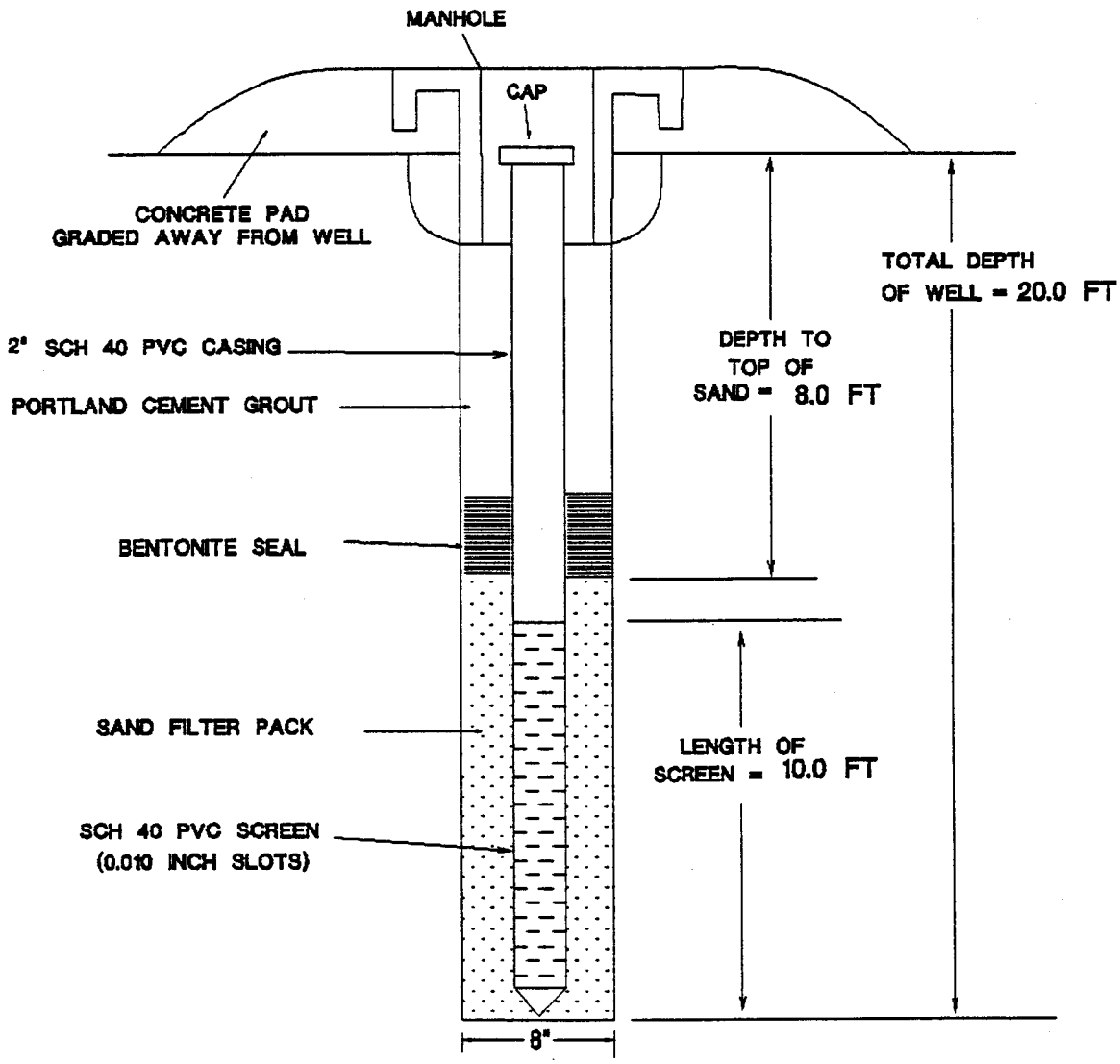

TYPE II MONITOR WELL	T ROAD E NVIRONMENTAL C ONSULTANTS, INC. AND ASSOCIATES 3519 CLEMMONS ROAD CLEMMONS, NC 27012 TELEPHONE AND FAX (919) 766-0810	MONITORING WELL INSTALLATION RECORD

JOB NAME DRAPER CORPORATION

WELL NUMBER MW-15 DATE OF INSTALLATION 2/1-2/93

LOCATION GREENSBORO, NC

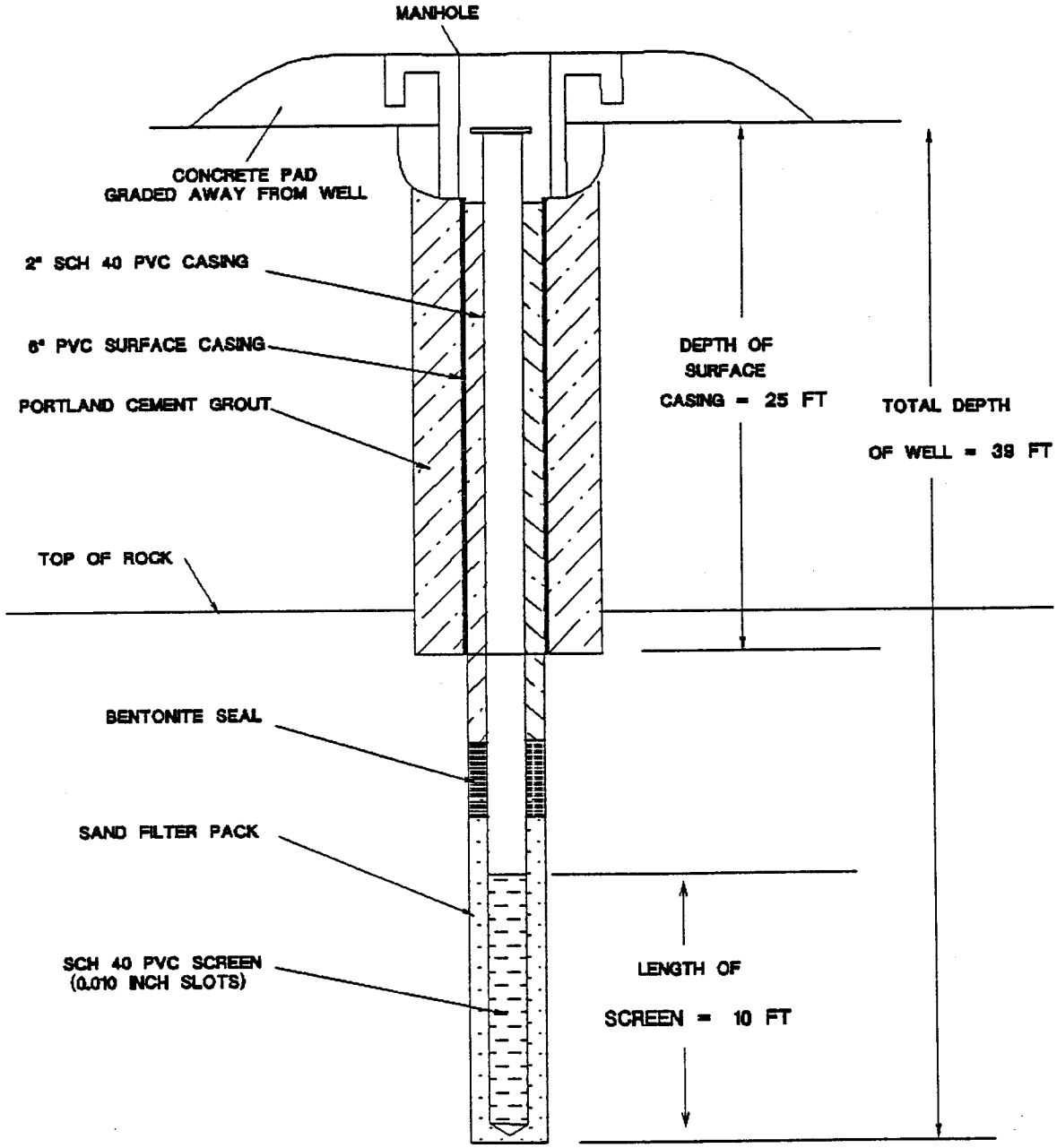

TYPE III MONITOR WELL	TRIAD ENVIRONMENTAL CONSULTANTS, INC. AND ASSOCIATES 3519 CLEMMONS ROAD CLEMMONS, NC 27012 TELEPHONE AND FAX (919) 766-0810	MONITORING WELL INSTALLATION RECORD

BORING LOCATIONS

Draper Corporation
Hornaday Road
Greensboro, North Carolina

Boring B1 - Located north - side of walled wash pit. Boring performed November 23, 1992

Boring B2 - Located south - side of walled wash pit. Boring performed November 23, 1992.

Boring B3 - Located northwest of walled wash pit, near building wall. Boring performed November 23, 1992. Converted to groundwater monitoring well MW-1.

Boring B4 - Located north on walled wash pit, in "old" drum storage area. Boring performed November 23, 1992.

Boring B5 - Located west (apparently downgradient) of dyehouse area. Boring performed November 23, 1992. Converted to groundwater monitoring well MW-2.

Boring B6 - Located western side of two story office building, possibly in former UST area. Boring performed November 23, 1992.

Boring B7 - Located in grassy area western side of two story office building area. Boring performed November 25, 1992. Converted to groundwater monitoring well MW-3.

Boring B8 - Located northwest side of plant, boiler room area in front of roll-up door. Boring performed November 25, 1992.

Boring B9 - Located northwest of plant, boiler room area at steps. Boring performed November 25, 1992.

Boring B10 - Located on northwest side of two story office building at deburring wastewater discharge. Boring performed November 25, 1992.

Boring B11 - Located on northwest side of plant, battery storage area, near buried natural gas pipeline. Boring performed November 25, 1992.

Boring B12 - Located northwest side of plant, battery storage area, directly in front of rollup door. Boring performed November 25, 1992.

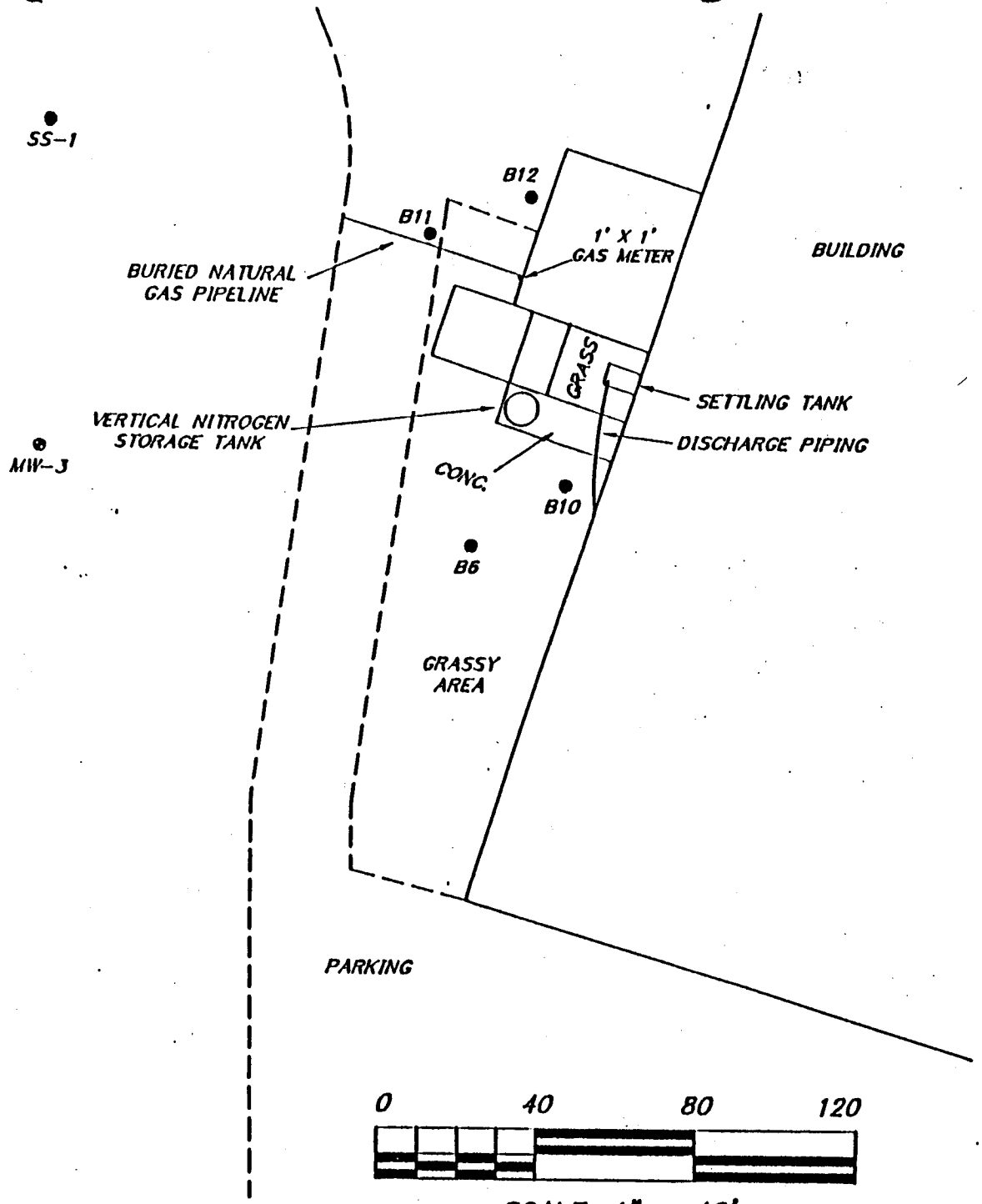

SCALE: 1" = 40'

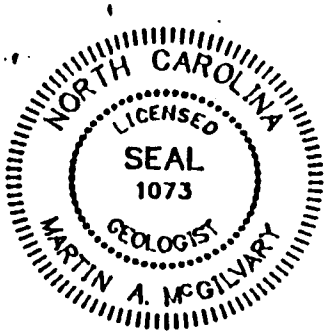

DETAIL SHOWING SOIL BORINGS
AND MONITORING WELL LOCATIONS
WEST SIDE OF PLANT BUILDING.

TE2B.DWG

TRIAD ENVIRONMENTAL CONSULTANTS, INC.
AND ASSOCIATES

3519 CLEMMONS ROAD
CLEMMONS, N.C. 27012
TELEPHONE & FAX
(919) 766-0810

PROJECT: DRAPER CORP.
FRIENDSHIP TOWNSHIP
GUILFORD COUNTY
GREENSBORO, N.C.

DATE:	DRAWN BY:
DECEMBER 23, 1992	T. SCOTT BARROW

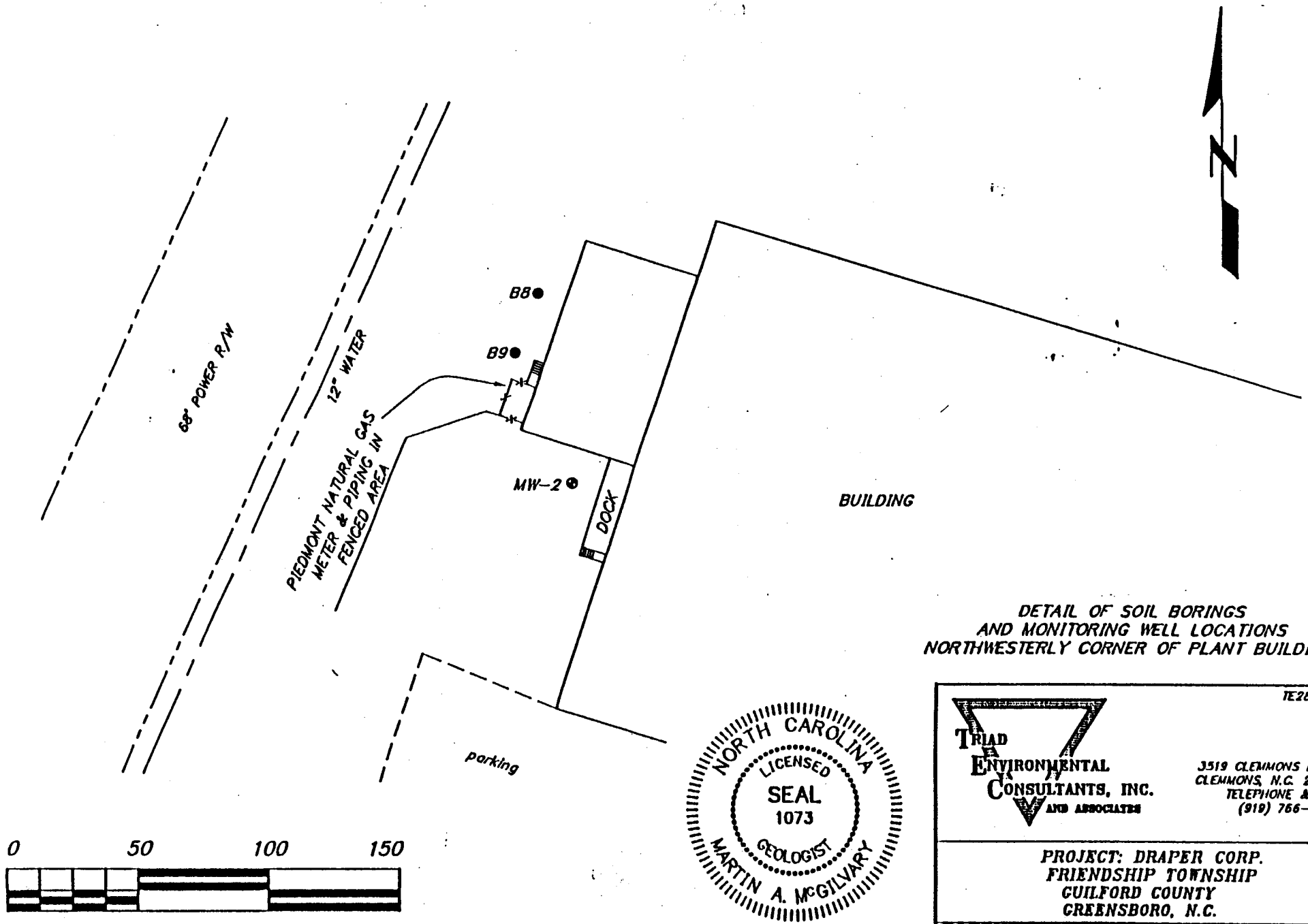

DETAIL OF SOIL BORINGS
AND MONITORING WELL LOCATIONS
NORTHWESTERLY CORNER OF PLANT BUILDING.

NORTH CAROLINA
LICENSED
SEAL
1073
GEOLOGIST
MARTIN A. McGILVARY

TE28.DWG

TRIAD ENVIRONMENTAL CONSULTANTS, INC. AND ASSOCIATES

3519 CLEMMONS ROAD
CLEMMONS, N.C. 27012
TELEPHONE & FAX
(919) 766-0810

PROJECT: DRAPER CORP.
FRIENDSHIP TOWNSHIP
GUILFORD COUNTY
GREENSBORO, N.C.

DATE:	DRAWN BY:
DECEMBER 15, 1992	T. SCOTT BARROW

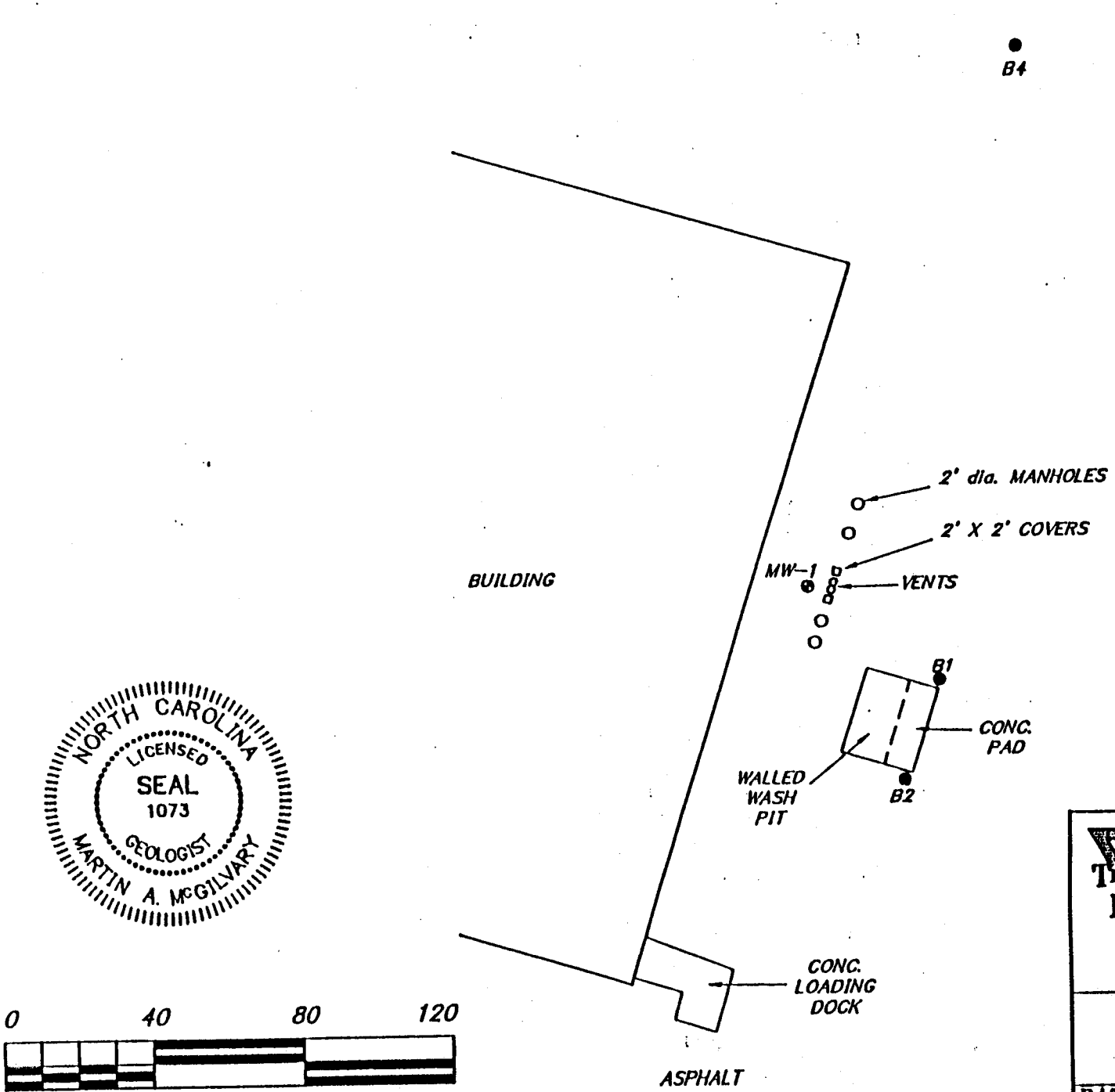

DETAIL SHOWING WASH PIT AREA NORTHEAST SIDE OF PLANT BUILDING.

NORTH CAROLINA
LICENSED
SEAL
1073
GEOLOGIST
MARTIN A. McGILVARY

0 40 80 120

SCALE: 1" = 40'

TE28.DWG

TRIAD ENVIRONMENTAL CONSULTANTS, INC. AND ASSOCIATES

3519 CLEMMONS ROAD
CLEMMONS, N.C. 27012
TELEPHONE & FAX
(919) 766-0810

PROJECT: DRAPER CORP.
FRIENDSHIP TOWNSHIP
GUILFORD COUNTY
GREENSBORO, N.C.

DATE:	DRAWN BY:
DECEMBER 15, 1992	T. SCOTT BARROW

BORING LOGS

Draper Corporation
5644 Hornaday Road
Greensboro, North Carolina

Boring	Interval Collected (Ft.)	Blow Count	Geologic Description
Boring B1 - Located north - side of walled wash pit. Boring performed November 23, 1992			
B1	1.5-3	2-3-5	Clayey silt, pinkish red
B1	3.5-5	2-3-4	Clayey silt, pinkish red
B1	8.5-10	3-5-8	Clayey silt, pinkish red, wet
B1	13.5-15	4-5-8	Clayey silt, saprolitic, mottled pink and white, quartz grains present

Boring B1 terminated at 15 feet

Boring B2 - Located south - side of walled wash pit. Boring performed November 23, 1992.

B2	1.5-3	2-4-4	Clayey silt, pinkish red
B2	3.5-5	2-7-9	Clayey silt, pinkish red
B2	8.5-10	4-7-10	Clayey silt, pinkish red
B2	13.5-15	5-6-8	Clayey silt, pinkish red, saprolitic; black color on relief fracture surfaces

Boring B2 terminated at 15 feet.

BORING LOGS
(CONT.)

Draper Corporation
5644 Hornaday Road
Greensboro, North Carolina

Boring	Interval Collected (Ft.)	Blow Count	Geologic Description
Boring B3 - Located northwest of walled wash pit, near building wall. Boring performed November 23, 1992.			
B3	3.5-5	2-4-8	Clayey silt, pinkish red, mottled
B3	8.5-10	4-7-9	Clayey silt, pinkish red, mottled; black color along grain boundaries
B3	13.5-15	NR*	Clayey silt, yellow tan and black, mottled
B3	18.5-20	3-3-6	Clayey silt, pinkish red, mottled with yellow tan and black
B3	23.5-25	3-5-5	Saprolite; clayey silt, pinkish red mottled with yellow tan and black

*** NR - Not Recorded**

Boring B3 converted into groundwater monitoring well MW-1, 25 feet deep.

Boring B4 - Located north on walled wash pit, in "old" drum storage area. Boring performed November 23, 1992.

B4	3.5-5	11-13-16	Clayey silt, gray brown with rock fragments
B4	8.5-10	7-5-7	Clayey silt, gray brown with rock fragments
B4	13.5-15	6-17-31	Saprolite, yellow brown and orange, mottled; rock fragments present

Boring B4 terminated at 15 feet.

BORING LOGS
(CONT.)

Draper Corporation
5644 Hornaday Road
Greensboro, North Carolina

Boring	Interval Collected (Ft.)	Blow Count	Geologic Description
Boring B5 - Located west (apparently downgradient) of dyehouse area. Boring performed November 23, 1992.			
B5	3.5-5	6-8-19	Clay, dark red (Fill?) and and clayey silt, yellow brown, hard and compact
B5	8.5-10	4-5-14	Saprolite, clayey silt, yellow brown and white, mottled
B5	13.5-15	7-22-22	Saprolite, gray brown and white, mottled; weathered mica schist
B5	18.5-20	26-50/4"	Saprolite, weathered mica schist; little recovery in splitspoon
B5	23.5-25	50/6"	Saprolite, gray green; sandy silt; very little recovery; partially weathered rock

Boring B5 converted to groundwater monitoring well MW-2.

BORING LOGS
(CONT.)

Draper Corporation
5644 Hornaday Road
Greensboro, North Carolina

Boring	Interval Collected (Ft.)	Blow Count	Geologic Description
Boring B6 - Located western side of two story office building, possibly in former UST area. Boring performed November 23, 1992.			
B6	8.5-10	6-4-6	Clayey silt, dark gray, stiff
B6	13.5-15	3-5-10	Clayey silt, dark gray, stiff
B6	18.5-20	4-9-19	Saprolite, brown; very weathered mica schist
B6	23.5-25	7-12-14	Saprolite, white and brown mottled, granitic texture

Boring B6 terminated at 25 feet.

Boring B7 - located in grassy area western side of two story office building area. Boring performed November 25, 1992.

B7	3.5-5	3-4-7	Clayey silt, red brown and yellow tan
B7	8.5-10	2-5-6	Clayey silt, yellow brown and red brown; black color along relief fracture surfaces
B7	13-15	3-4-6	Saprolite, tan and yellow tan, mottled, medium grain texture

Boring B7 converted to groundwater monitoring well MW-3, 25 feet deep.

BORING LOGS
(CONT.)

Draper Corporation
5644 Hornaday Road
Greensboro, North Carolina

Boring	Interval Collected (Ft.)	Blow Count	Geologic Description
Boring B8 - Located northwest side of plant, boiler room area. Boring performed November 25, 1992			
B8	3.5-5	2-3-4	Clayey silt, gray green, stiff
B8	8.5-10	4-8-10	Saprolite, orangish yellow tan, mottled with white
B8	13.5-15	50/6"	Partially weathered rock; gray green color, schistose

Boring B8 terminated at 15 feet.

Boring B9 - Located northwest of plant, boiler room area at steps. Boring performed November 25, 1992.

B9	3.5-5	3-3-5	Clayey silt, gray green
B9	8.5-10	50/2"	No sample (splitspoon refusal)

Boring B9 terminated at 10 feet.

Boring B10 - Located on northwest side of two story office building at deburring wastewater discharge. Boring performed November 25, 1992.

B10	3.5-5	4-4-7	Clayey silt, red brown (Fill?); stiff and compact
B10	8.5-10	4-6-6	Clayey silt, gray green

Boring B10 terminated at 10 feet.

BORING LOGS
(CONT.)

Draper Corporation
5644 Hornaday Road
Greensboro, North Carolina

Boring	Interval Collected (Ft.)	Blow Count	Geologic Description
Boring B11 - Located on northwest side of plant, battery storage area, near buried natural gas pipeline. Boring performed November 25, 1992.			
B11	3-5.5	3-4-5	Clayey silt, red brown (Fill?); stiff and compact
B11	8.5-10	3-5-9	Clayey silt, red brown and yellow tan in part
B11	13.5-15	3-4-6	Saprolite, orangish yellow tan, mottled with white

Boring B11 terminated at 15 feet

Boring B12 - Located northwest side of plant, battery storage area, directly in front of rollup door. Boring performed November 25, 1992.			
B12	8.5-10	19-15-20	Clayey silt, yellow tan
B12	13.5-15	6-14-17	Clayey silt, yellow tan

Boring B12 terminated at 15 feet