RECEIVED
JUN 14

COMPREHENSIVE MONITORING REPORT

YARBORO PROPERTY
2205 OAK HILL DRIVE
GREENSBORO, NORTH CAROLINA

JUNE 13, 1996

CSA (3/10/95) Rejected on 4/23/95
CAP (10/16/95)
Comp Mon Rpt (Revised CSA) (6/13/96) ~~Rp~~ Accepted with CSA on 6/25/96.
Yarboro Property, Melvin

LEGACY ENVIRONMENTAL SERVICES, INC.

COMPREHENSIVE SITE ASSESSMENT REPORT

MELVIN YARBORO PROPERTY
2205 OAK HILL DRIVE
GREENSBORO, NORTH CAROLINA

GROUNDWATER INCIDENT NUMBER 10017

JUNE 13, 1996

PREPARED BY:

LEGACY ENVIRONMENTAL SERVICES, INC.

R96-181

EXECUTIVE SUMMARY

1. Source Information

Type: High boiling point hydrocarbons in the form of heating oil.

Containers: One (1) 550 gallon heating oil UST.

Amount: Unknown

2. Initial Abatement Information

Tank Closure: All known underground storage tanks were removed on February 24, 1993. The UST Closure Report was submitted to the NCDEM on March 24, 1993. The Initial Site Characterization Report was submitted to the NCDEM by Legacy Environmental on May 4, 1994.

Soil Removal: To date no petroleum affected soil has been removed from the project site.

Free Product: None Detected

Water Supply: No known water supply wells are located within a 1,500 foot radius of the site. All surrounding properties have municipal water supplies available.

3. Extent of Release and Potentially Affected Receptors

Potential Receptors: A tributary of Buffalo Lake is located approximately 1,500 feet to the east of the site.

Subsurface Structures: No subsurface utilities were observed in the petroleum impacted area.

Population: Residential

Maximum Contaminant Concentrations - Soil: TPH concentrations by Method 5030 is 145 ppm; TPH concentrations by Method 3550 is 1,450 ppm from UST closure samples.

Maximum Contaminant Concentrations - Groundwater:

Xylenes	17 ug/l (MW-1)
Naphthalene	15 ug/l (MW-1)
1,2,4-Trimethylbenzene	24 ug/l (MW-1)
(E)-1-Phenyl-1-butene	11 ug/l (MW-1)
1-Methylnaphthalene	17 ug/l (MW-1)
1,5-Dimethylnaphthalene	27 ug/l (MW-1)
2,3-Dimethylnaphthalene	34 ug/l (MW-1)
1,7-Dimethylnaphthalene	20 ug/l (MW-1)
2-Methylnaphthalene	60 ug/l (MW-1)
TICs (Total)	193 ug/l (MW-1)
Lead	45 ug/l (MW-3)

Groundwater Flow-General Flow Direction: east, southeast

Flow Rate: 5.01×10^{-5} feet/minute (26.34 feet/year)

4. Conclusions/Recommendations for Corrective Action

The extent of petroleum impacted soil and groundwater have been delineated.

The fluctuation of the depth to the shallow groundwater table at the site may have an effect on TPH levels present in the soil within this fluctuation zone.

A Corrective Action Plan should be prepared to determine the most effective means of remediation.

TABLE OF CONTENTS

		Page
1.0	SITE HISTORY AND SOURCE CHARACTERIZATION	1
2.0	POTENTIAL RECEPTORS AND MIGRATION PATHWAYS	1
3.0	SOILS INVESTIGATION	1
4.0	GROUND WATER INVESTIGATION	2
5.0	CONCLUSIONS AND RECOMMENDATIONS	3
6.0	LIMITATIONS	4
7.0	REFERENCES	4
8.0	CERTIFICATION	5

LIST OF FIGURES

Figure 1: Project Location/U.S.G.S. Topographic Map
Figure 2: Adjacent Properties Map
Figure 3: Site Plan
Figure 4: Geologic Cross Section A to A'
Figure 5: Soil TPH Map
Figure 6: Soil Cross Section B to B' and C to C'
Figure 7: Potentiometric Surface Map (2-17-95)
Figure 7A: Potentiometric Surface Map (5-31-96)
Figure 8: Total Volatiles and Semi-volatiles Isoconcentration Map
Figure 9: Total Volatiles and Semi-volatiles Isoconcentration Cross Section A to A'

LIST OF TABLES

Table 1: Adjacent Property Owners
Table 2: Soil Sample Field and Laboratory Analytical Results
Table 3: Monitoring Well Information and Groundwater Elevations
Table 4: Summary of Groundwater Laboratory Analytical Results

APPENDICES

Appendix A: Soil Boring Logs
Appendix B: Standard Operating Procedures
Appendix C: Soil Analytical Results
Appendix D: Well Construction Records
Appendix E: Groundwater Analytical Results
Appendix F: Slug Test Data and Analyses

COMPREHENSIVE SITE ASSESSMENT
MELVIN YARBORO PROPERTY
GREENSBORO, NORTH CAROLINA

1.0 - SITE HISTORY AND SOURCE CHARACTERIZATION

The Melvin Yarboro property is located at 2205 Oak Hill Drive in Guilford County, Greensboro, North Carolina. The location of the site is illustrated on the Greensboro Quadrangle U.S.G.S. Topo Map contained in Figure 1. The residence formerly operated one 550 gallon heating oil underground storage tank (UST). The UST was excavated and removed from the site on February 24, 1993. Laboratory analytical results of soil samples collected during UST closure confirmed a petroleum release had occurred. A UST Closure Assessment report prepared by G & H Oil Equipment, Inc. and dated March 24, 1993 contains additional information regarding the UST closure activities.

An Initial Site Characterization was performed by installing one shallow groundwater monitoring well (MW-1) adjacent to the UST excavation area in the apparent down-gradient direction. Laboratory analytical results indicated that the groundwater had been impacted by petroleum related constituents. The Initial Site Characterization Report for this site was submitted to the DEM on May 4, 1994 by Legacy Environmental.

2.0 - POTENTIAL RECEPTORS AND MIGRATION PATHWAYS

The Melvin Yarboro property is situated within the drainage basin of Buffalo Lake, which is located approximately 7,000 feet to the east. A tributary of Buffalo Lake is located approximately 1,500 feet to the east and the site topography also slopes moderately to the east. The site is located in a residential area of the City of Greensboro.

Surrounding properties are illustrated in Figure 2 and Table 1 lists the adjacent property owners. No known water supply wells are located within a 1,500 radius of the site. Public water supplies are available to all surrounding properties as supplied by the City of Greensboro.

No subsurface utility lines were observed within the petroleum affected area at this facility.

3.0 - SOILS INVESTIGATION

The site is situated in the North Carolina Slate Belt. Local bedrock geology of the region consists of Late Proterozoic to Cambrian aged metamorphosed granitic bedrock. The site specific regolith is saprolitic as derived from the parent bedrock and consists of various textural assemblages including:

Dark red to light brown silts with varying clay content

Red-brown to light brown clay with varying silt content

Relic lithic structures and textures were also noted in the soils at the project site. Bedrock was not encountered during the installation of any of the soil borings or monitoring wells. The site layout and monitor well locations is illustrated in plan view on Figure 3, and a geological cross section is illustrated in Figure 4. Soil boring logs for the site are contained in Appendix A.

In addition to the borings advanced for monitor well installation, five soil borings were completed in an effort to delineate the extent of the petroleum affected soil. Soil samples were collected from the borings and submitted for laboratory analyses according to EPA Methods 5030 and 3550. Legacy's Standard Operating Procedures, which are contained in Appendix B, were followed during all sampling events. In addition, soil samples collected were field screened with a Photoionization Detector (PID). Table 2 summarizes the field and laboratory results for all soil samples, and a copy of the laboratory reports for the soil samples are included in Appendix C.

Figure 5 contains a Soil TPH Map which illustrates the horizontal extent of soil contamination. Soil Cross-Sections B to B' and C to C' contained as Figure 6 illustrate the subsurface extent of the TPH constituents in the soil. Several of the soil samples collected were noted to be in the zone of groundwater table fluctuation as shown on Figure 6.

4.0 - GROUND WATER INVESTIGATION

A total of six North Carolina Type II groundwater monitoring wells labelled as MW-1 through MW-6 have been installed at the site. All monitoring wells were constructed of 2-inch Schedule 40 PVC with 0.010 inch slotted screen of varying intervals. A sand pack was placed around all slotted portions, and a bentonite seal was installed above the sand pack. The wells were then grouted to the land surface and secured with water-tight locking well caps and watertight PVC well covers. Based on the assumption that the contaminants being addressed were primarily hydrocarbon constituents with specific gravities of less than 1.0, five of the monitoring wells (MW-1, 2, 3, 5, and 6) were installed so that the screened interval intersected the shallow groundwater table. Monitoring well MW-4 was installed with the screened interval below shallow groundwater table to perform aquifer testing on this well. Well Construction Records are included in Appendix D. Figure 3 illustrates the location of the monitoring wells plan view and Figure 4 shows the well locations in a cross-section view, as well as the corresponding geology and relative groundwater elevations as measured on December 13, 1994, and February 17, 1995.

The groundwater table was noted to fluctuate by approximately ten feet between measuring events. Figure 7 and 7A illustrate the estimated shallow groundwater potentiometric surfaces as measured on February 17, 1995, and May 31, 1996, respectively. Groundwater flow is noted to be primarily to the east. The average potentiometric surface gradient in the direction of primary groundwater flow has been calculated at approximately 0.039 for the site. Table 3 summarizes the monitoring well information and groundwater elevations.

After installation, the monitoring wells were developed and sampled in accordance with Legacy's Standard Operating Procedures. Groundwater sampling events were conducted on the following dates: March 18, 1994 (MW-1); February 1, 1995 (MW-2 through MW-5); May 31, 1996 (MW-6). All groundwater samples were submitted for laboratory analyses according to Methods 602 + Xylenes, 625 including Tentatively Identified Compounds (TICs), and Method 3030C for lead.

The groundwater samples from the project site indicated MW-1 to contain Xylenes at 17 parts per billion (ppb), which is below its 2L Standard of 530 ppb. Naphthalene was also detected at a level of 15 ppb, which is below the 2L Standard of 21 ppb. The laboratory analytical results also reported seven TICs in MW-1. Lead was detected above the 2L Standard of 15 ppb in the samples collected from MW-3 and MW-4. These wells contain lead concentrations of 45 ppb and 20 ppb, respectively. None of the other monitor wells showed any detectable compounds, and no other 2L violations were reported at the site. Table 4 summarizes the groundwater laboratory analytical results, and a copy of the laboratory analytical reports and the chain of custody records for the water samples are included in Appendix E.

The horizontal extent of total volatile and semi-volatile compounds detected at the site are illustrated on a isoconcentration map in Figure 8. A total volatile and semi-volatile isoconcentration cross-section for the site is contained in Figure 9.

One single well falling head test or "slug test" was performed on MW-4 to determine the saturated hydraulic conductivity of the water table aquifer. MW-4 was selected since it is the only on-site well in which the screened interval is totally located beneath water table. The method of Bouwer and Rice (Bouwer and Rice, 1989, 1976) was chosen to reduce the slug test data. A computer program developed by the Geraghty & Miller Modeling Group named AQTESOLV was used to estimate the aquifer parameters. Results of the slug test indicate a hydraulic conductivity in the tested well of 2.57×10^{-4} feet/minute. This result is consistent with published values for silt, loess and silty sand (Freeze & Cherry, 1979). Slug test data are included in Appendix A.

Ground water flow velocity was determined by averaging the hydraulic conductivity values and assuming an estimated effective porosity of 20% for soils at the site. The following equation yields an estimate of average ground water flow velocity:

$$v = k/n \times dh/dl$$

Where v=average ground water flow velocity
K=average hydraulic conductivity=2.57×10^{-4}ft/min.
n=effective porosity=0.20
dh/dl=ground water head gradient=0.039 ft/ft

Average ground water flow velocity at the site is calculated to be 5.01×10^{-5}feet/minute (26.34 feet/year).

5.0 -CONCLUSIONS AND RECOMMENDATIONS

Based on the information presented in this report, Legacy makes the following conclusions and recommendations:

1) The lateral and vertical extent of petroleum impacted soil and groundwater have been delineated.

2) Legacy recommends implementation of the previously submitted CAP which addresses secondary source removal (soil excavation). The NCDEHNR may wish to defer approval until risk based policies are adopted.

6.0-LIMITATIONS

This report has been prepared for the exclusive use of Melvin Yarboro for the specific application to the referenced facility located in Guilford County. The assessment was conducted based on the scope of work and level of effort desired by the client and with resources adequate only for the scope of work to be performed. Our findings have been developed in accordance with generally accepted standards in the practice of geology and hydrogeology in the State of North Carolina, available information and our professional judgement No other warranty is expressed or implied.

The data presented in this report are indicative of conditions that existed at the precise locations sampled and at the time the samples were collected. Additionally, the data obtained from the samples would be interpreted as meaningful with respect to parameters indicated in the laboratory reports. No additional information can be logically inferred from this data.

7.0 REFERENCES

G & H Oil Equipment, Inc., "Underground Storage Tank Closure Assessment," dated, March 24, 1994, for the Melvin Yarboro property, Greensboro, North Carolina.

Legacy Environmental Services, Inc., "Initial Site Characterization Report," dated, May 4, 1994, for the Melvin Yarboro property, Greensboro, North Carolina.

Tax Map 275, Guilford County, North Carolina.

USGS 7.5 Minute Series (Topographic) Greensboro, North Carolina Quadrangle, 1951 (photorevised 1968).

Geological Map of North Carolina, 1985. Department of Natural Resources and Community Development.

Fetter.C.W. 1994. "Applied Hydrogeology".Third Edition Macmillan Publishing Company, Inc.

Bouwer, H., and Rice, R.C., 1976, A Slug Test for Determining Hydraulic Conductivity of Unconfined Aquifers With Completely or Partially Penetrating Wells, Water Resources Research, Vol. 12, No. 3.1976.

Bouwer, H., 1989, The Bouwer and Rice Slug Test-An Update, Ground Water, Vol. 27, No. 3.

Kruseman, G.P., and deRidder, N.A., 1989, Analysis and Evaluation of Pumping Test Data, International Institute for Land Reclamation and Improvement/ILRI, Wageningen, The Netherlands, 377 p.

Freeze, R.A. & Cherry, J.A., 1979, Groundwater, Prentice Hall, Englewood Cliffs, NJ, 566 p.

8.0 CERTIFICATION

The Comprehensive Site Assessment for this site has been prepared by Legacy Environmental Services, Inc. under the direct supervision of licensed engineers or geologists. Technical review of this document has been provided by Henry Nemargut Engineering Services. All engineering work performed on this project was conducted under my direct supervision:

Henry Nemargut, P.E.
Henry Nemargut Engineering Services
North Carolina License #17669

TABLES

TABLE 1: ADJACENT PROPERTY OWNERS

COMPREHENSIVE SITE ASSESSMENT
2205 OAK HILL DRIVE
GREENSBORO, NORTH CAROLINA

Note: All addresses obtained from Guilford County Tax Records

MAP	BLOCK	LOT	OWNER INFO	SITE ADDRESS
275	3	16	Eileen Hall Curry	2206 Oak Hill Drive Greensboro, NC 27408
275	4	8	J. B. Wray	2207 Oak Hill Drive Greensboro, NC 27408
275	4	13	Little Mouse Playhouse Daycare	2903 Lawndale Drive Greensboro, NC 27408
275	4	14	Robert Eastwood	2203 Oak Hill Drive Greensboro, NC 27408
			PROJECT LOCATION	
275	4	12	Melvin Yarborough	2205 Oak Hill Drive Greensboro, NC 27408

OAKHILL

TABLE 2 (CON'T).

FIELD AND LABORATORY ANALYTICAL RESULTS
SOIL SAMPLES (CON'T)

2205 OAK HILL DRIVE
GREENSBORO, NORTH CAROLINA

SAMPLE ID	LOCATION	DATE	DEPTH (FT)	TPH (3550)*	TPH (5030)*	OVA **
B3-8	Boring 3	2/9/95	8'	<40	<10	<10
B3-16	Boring 3	2/9/95	16'	<10	<10	<10
B4-8	Boring 4	2/9/95	8'	<40	<10	<10
B4-16	Boring 4	2/9/95	16'	<40	<10	<10
B5-15	Boring 5	5/30/96	15'	<8	<5	<10

* Results in parts per million (ppm)

** Field Screening Method (Photoionization Detector) in ppm

<5, <8, <10, and <40 = Below Detection Limits

R95-124A

TABLE 3

Monitoring Well Information and Groundwater Elevations

2205 Oak Hill Drive
Guilford County, Greensboro, North Carolina

Well Number	Top of Casing Elevation	Top of Screen Elevation	Bottom of Screen Elevation	Depth to Water	Groundwater Elevation
MW-1	98.64	84.64	64.64	14.35	84.29
MW-2	100.00	86.00	66.00	13.35	86.65
MW-3	94.92	80.92	60.92	14.43	80.49
MW-4	95.00	71.00	61.00	13.27	81.73
MW-5	97.69	80.69	60.69	14.68	83.01
MW-6	98.50	88.50	73.50	14.62	83.88

All measurements taken in feet on 5/31/96 and based on an arbitrary benchmark of 100.00 feet at MW-2.

X96-140A

TABLE 4

Summary of Groundwater Laboratory Analytical Results

2205 Oak Hill Drive
Greensboro, Guilford County, North Carolina

CONSTITUENT	MW-1	MW-2	MW-3	MW-4	MW-5	MW-6	2L Standard
Date	*3/18/96*	*2/1/96*	*2/1/96*	*2/1/96*	*2/1/96*	*5/31/96*	
Xylenes (total)	17	BDL	BDL	BDL	BDL	BDL	530
Naphthalene	15	BDL	BDL	BDL	BDL	BDL	21
1,2,4 - Trimethylbezene	24	BDL	BDL	BDL	BDL	BDL	NSE
(E) -1-Phenyl - 1- butene	11	BDL	BDL	BDL	BDL	BDL	NSE
1 - Methylnaphthalene	17	BDL	BDL	BDL	BDL	BDL	NSE
1,5 Dimethylnaphthalene	27	BDL	BDL	BDL	BDL	BDL	NSE
2 - Methylnaphthalene	60	BDL	BDL	BDL	BDL	BDL	NSE
2,3 Dimethylnaphthalene	34	BDL	BDL	BDL	BDL	BDL	NSE
1,7 Dimethylnaphthalene	20	BDL	BDL	BDL	BDL	BDL	NSE
Lead	BDL	BDL	45	20	BDL	BDL	15

Wrong sample date

All results reported in micrograms per liter (ug/l)

BDL = Below Detection Limits

NSE = No Standard Established

X96-140X

FIGURES

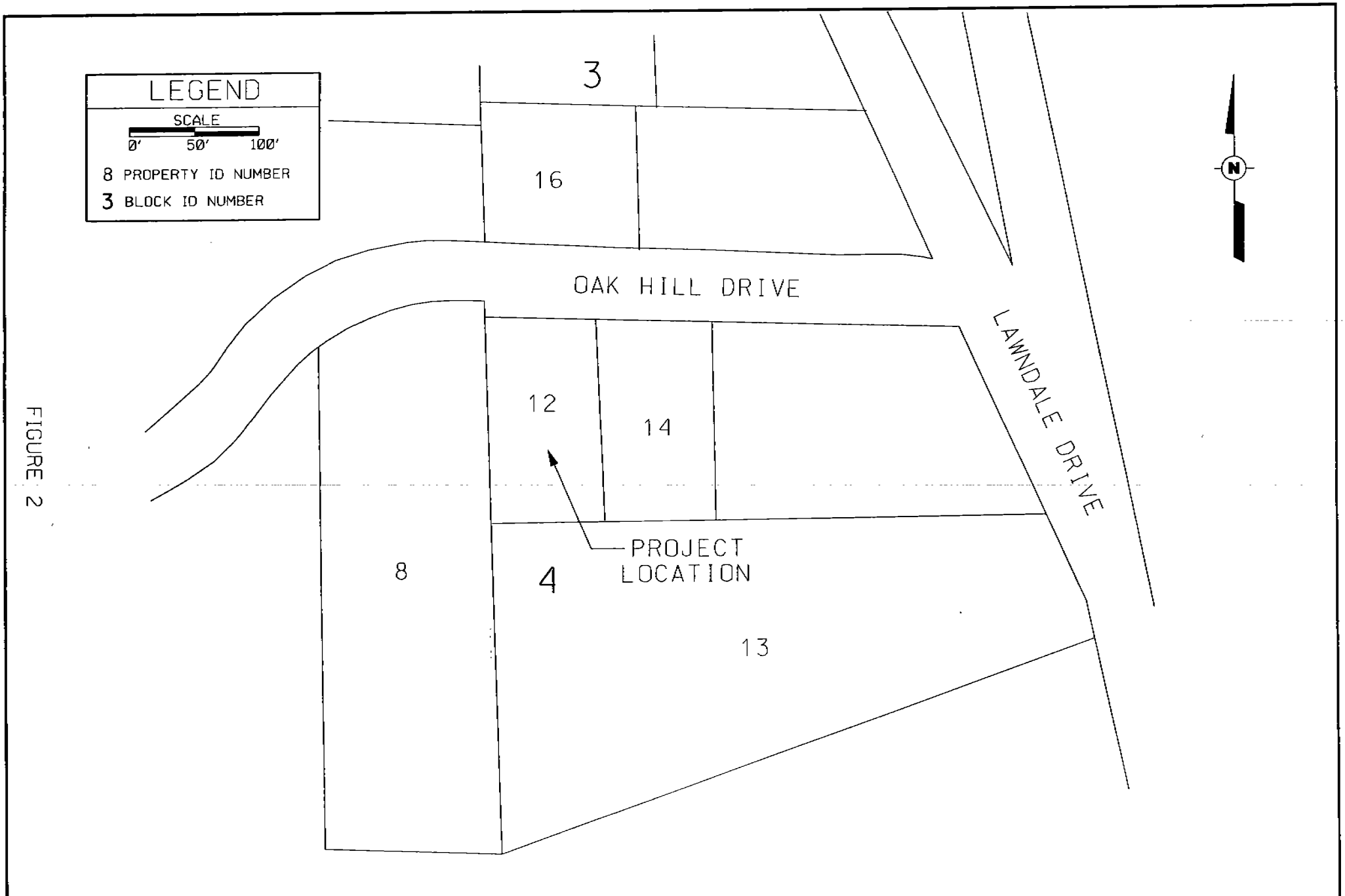

FIGURE 2

SCALE: 1"=100'	TITLE: ADJACENT PROPERTIES MAP	PROJECT: CSA 2205 OAK HILL DRIVE GREENSBORO, NC	CLIENT: MELVIN YARBOROUGH GREENSBORO, NC
DATE: 6/13/96			
DWN.BY: KBM			
DWG.# L94-133E			

LEGACY ENVIRONMENTAL SERVICES, INC.
GREENSBORO, NORTH CAROLINA

FIGURE 3

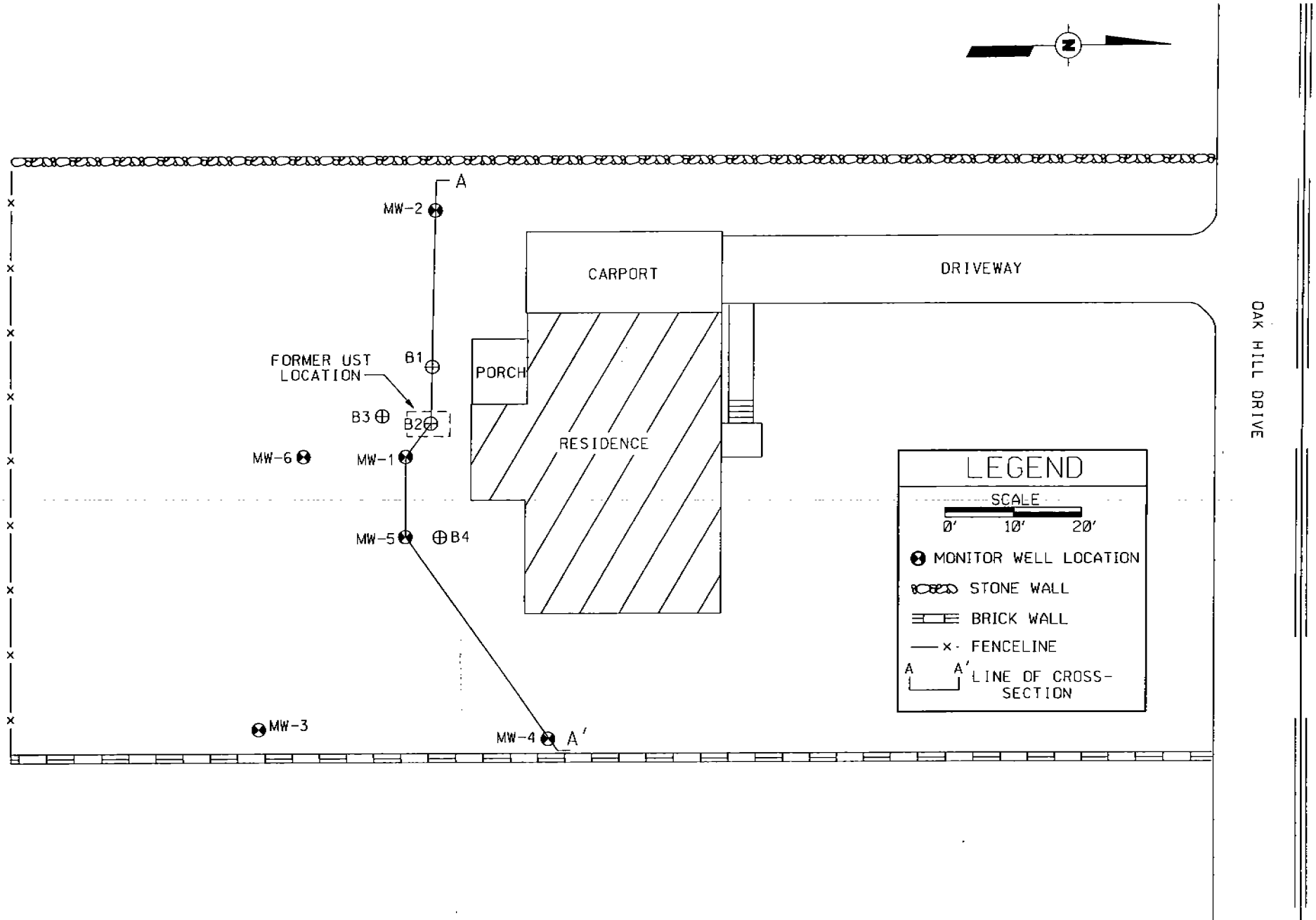

SCALE: 1"=20'	TITLE:	PROJECT:	CLIENT:	
DATE: 6/13/96	SITE PLAN	CSA 2205 OAK HILL DRIVE GREENSBORO, N.C.	MELVIN YARBOROUGH GREENSBORO, NC	LEGACY ENVIRONMENTAL SERVICES, INC. GREENSBORO, NORTH CAROLINA
DWN.BY: KBM				
DWG.# L94-133				

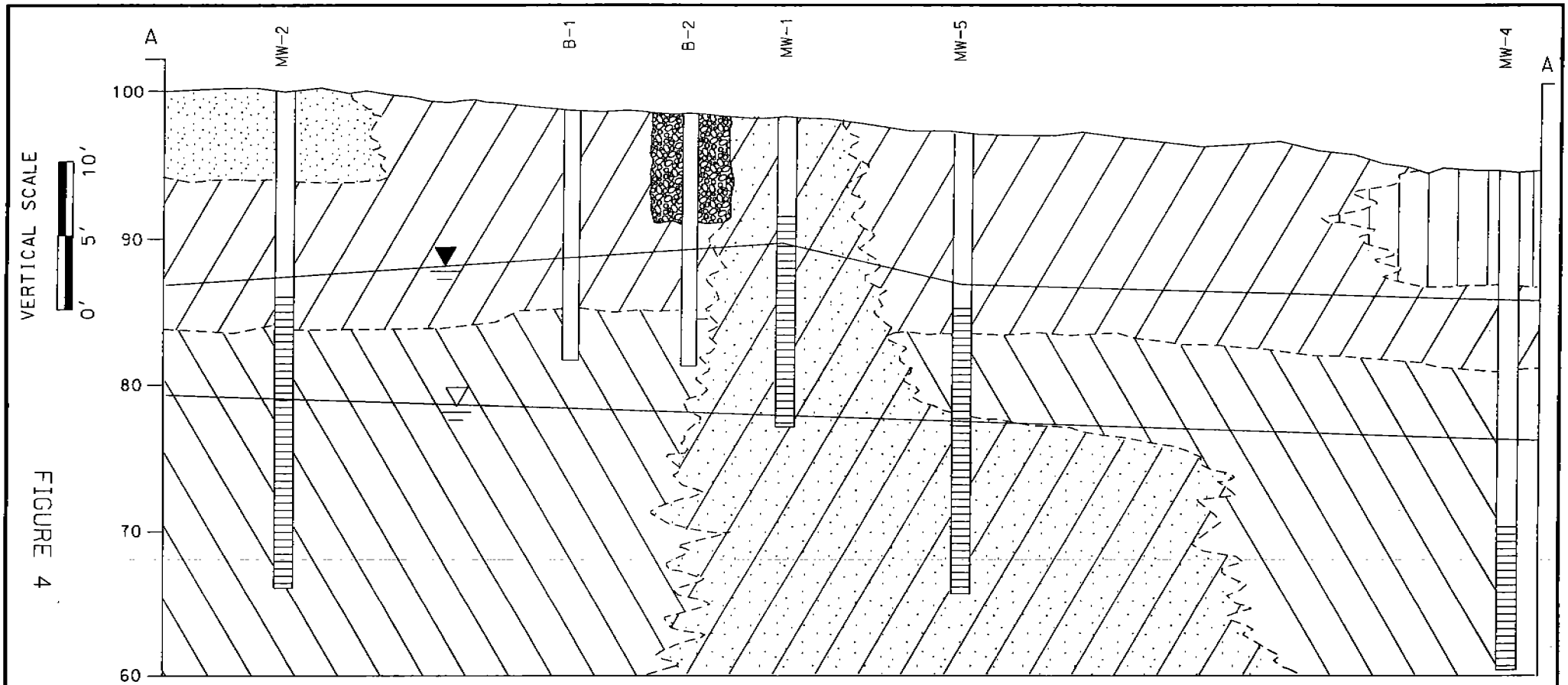

Note: All elevations based on arbitrary benchmark of 100.00 feet at MW-2.

HORIZONTAL SCALE

0' 10' 20'

LEGEND

- DARK RED TO LIGHT REDDISH-BROWN SILTS WITH VARYING CLAY CONTENT
- RED-BROWN TO TAN-BROWN CLAYS WITH VARYING SILT CONTENT
- RED SILT
- RED TO DARK RED CLAY WITH VARYING SILT CONTENT
- BROWN TO RED SILT WITH VARYING CLAY CONTENT AND VARYING AMOUNTS OF FINE AND MEDIUM GRAINED SAND
- BACKFILL
- ESTIMATED WATER TABLE (AS MEASURED 2-17-95)
- MONITOR WELL SCREENED INTERVAL
- ZONE OF GRADATIONAL CONTACT
- ESTIMATED WATER TABLE (AS MEASURED 12-13-94)

FIGURE 4

SCALE: NTS	TITLE: GEOLOGIC CROSS SECTION A-A'	PROJECT: CSA 2205 OAK HILL DRIVE GREENSBORO, NC	CLIENT: MELVIN YARBOROUGH GREENSBORO, NC
DATE: 6/12/96			
DWN.BY: KBM			
DWG.# L94-133F			

LEGACY ENVIRONMENTAL SERVICES, INC.
GREENSBORO, NORTH CAROLINA

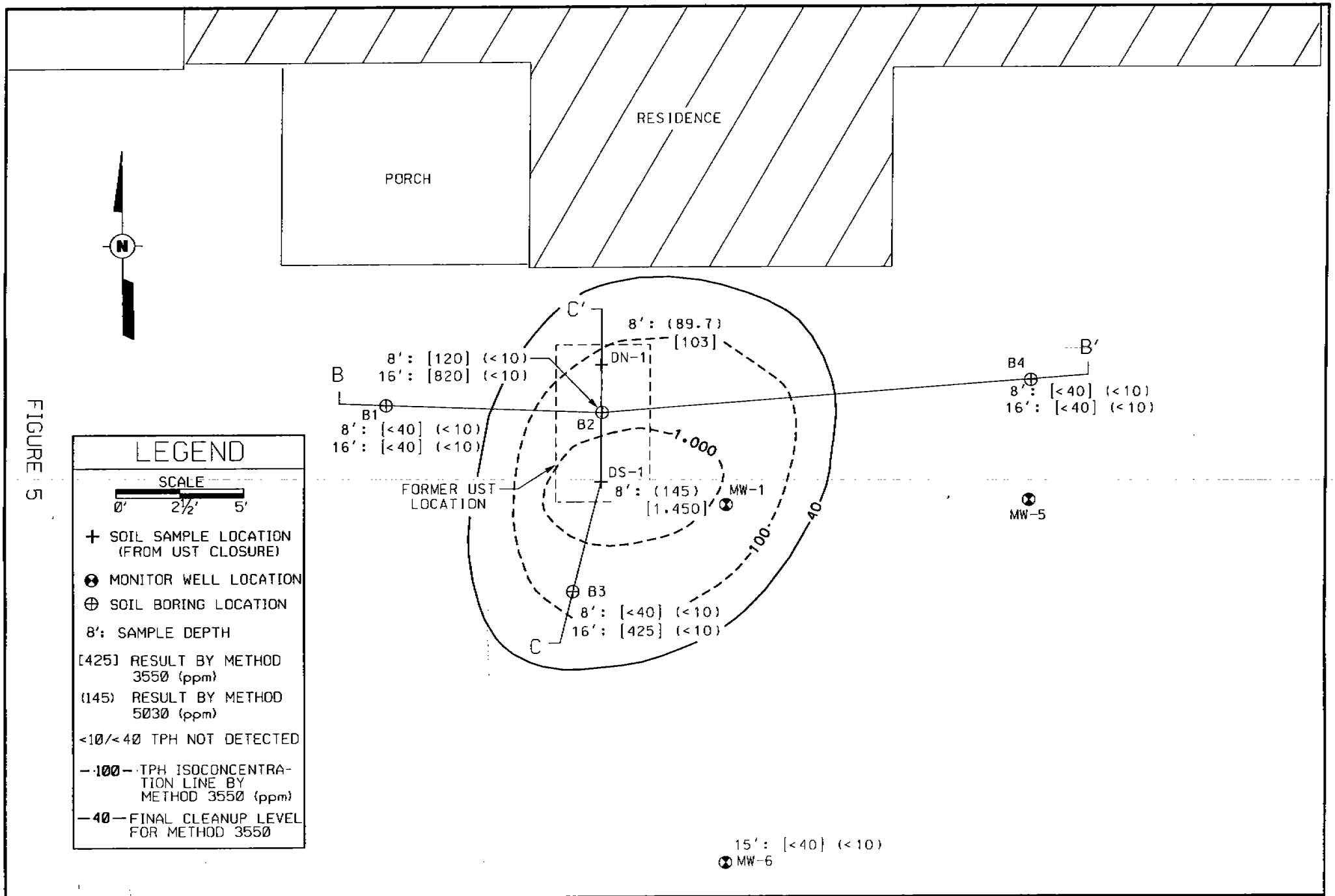

FIGURE 5

SCALE: 1"=5'	TITLE: SOIL TPH MAP	PROJECT: CSA 2205 OAK HILL DRIVE GREENSBORO, NC	CLIENT: MELVIN YARBOROUGH GREENSBORO, NC
DATE: 6/13/95			LEGACY ENVIRONMENTAL SERVICES, INC. GREENSBORO, NORTH CAROLINA
DWN.BY: KBM			
DWG.# L94-133D			

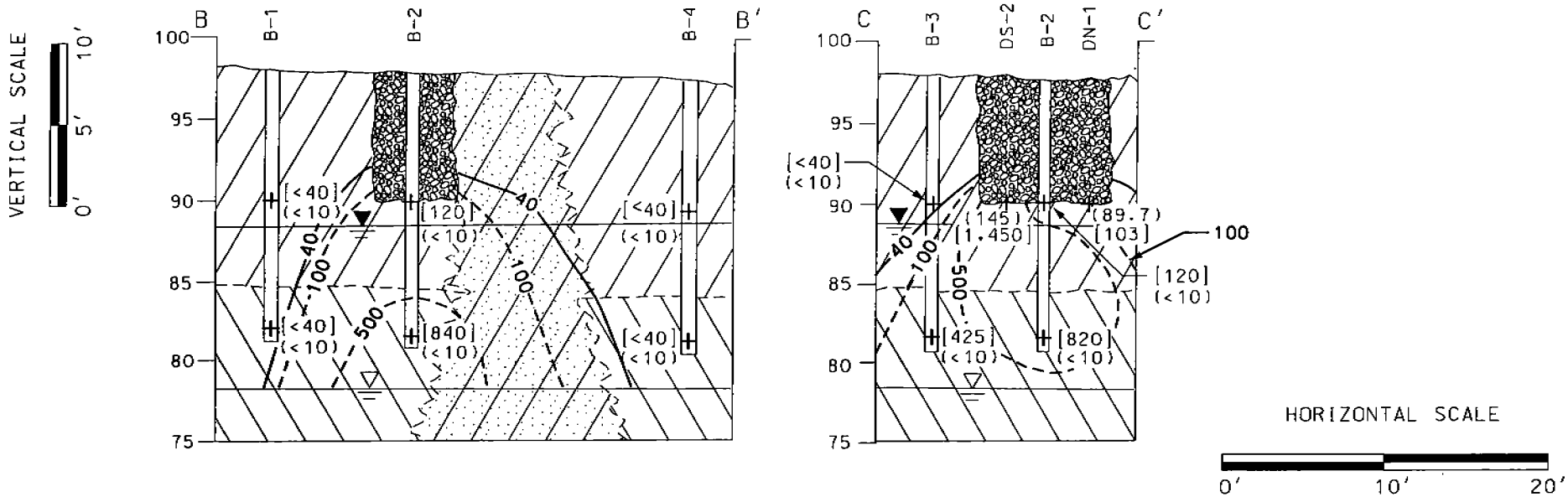

FIGURE 6

LEGEND

DARK RED TO LIGHT REDDISH-BROWN SILTS WITH VARYING CLAY CONTENT

RED-BROWN TO TAN-BROWN CLAYS WITH VARYING SILT CONTENT

BROWN TO RED SILT WITH VARYING CLAY CONTENT AND VARYING AMOUNTS OF FINE AND MEDIUM GRAINED SAND

BACKFILL

----- ZONE OF GRADATIONAL CONTACT

-- 100 -- TPH ISOCONCENTRATION LINE BY METHOD 3550

— 40 — FINAL CLEANUP LEVEL BY METHOD 3550

ESTIMATED WATER TABLE (AS MEASURED 12-13-94)

ESTIMATED WATER TABLE (AS MEASURED 2-17-95)

MONITOR WELL SCREENED INTERVAL

+ SOIL SAMPLE LOCATION

(89.7) TOTAL PETROLEUM HYDROCARBONS (TPH) BY METHOD 5030 (mg/kg)

[103] TPH BY METHOD 3550 (mg/kg)

[<40] TPH BY METHOD 3550 NOT DETECTED (mg/kg)

SCALE: 1"=10' DATE: 6/12/96 DWN.BY: KBM DWG.# L94-133H	TITLE: SOIL CROSS SECTIONS B TO B' AND C TO C'	PROJECT: CSA 2205 OAK HILL DRIVE GREENSBORO, N.C.	CLIENT: MELVIN YARBOROUGH GREENSBORO, NC	LEGACY ENVIRONMENTAL SERVICES, INC. GREENSBORO, NORTH CAROLINA

FIGURE 7

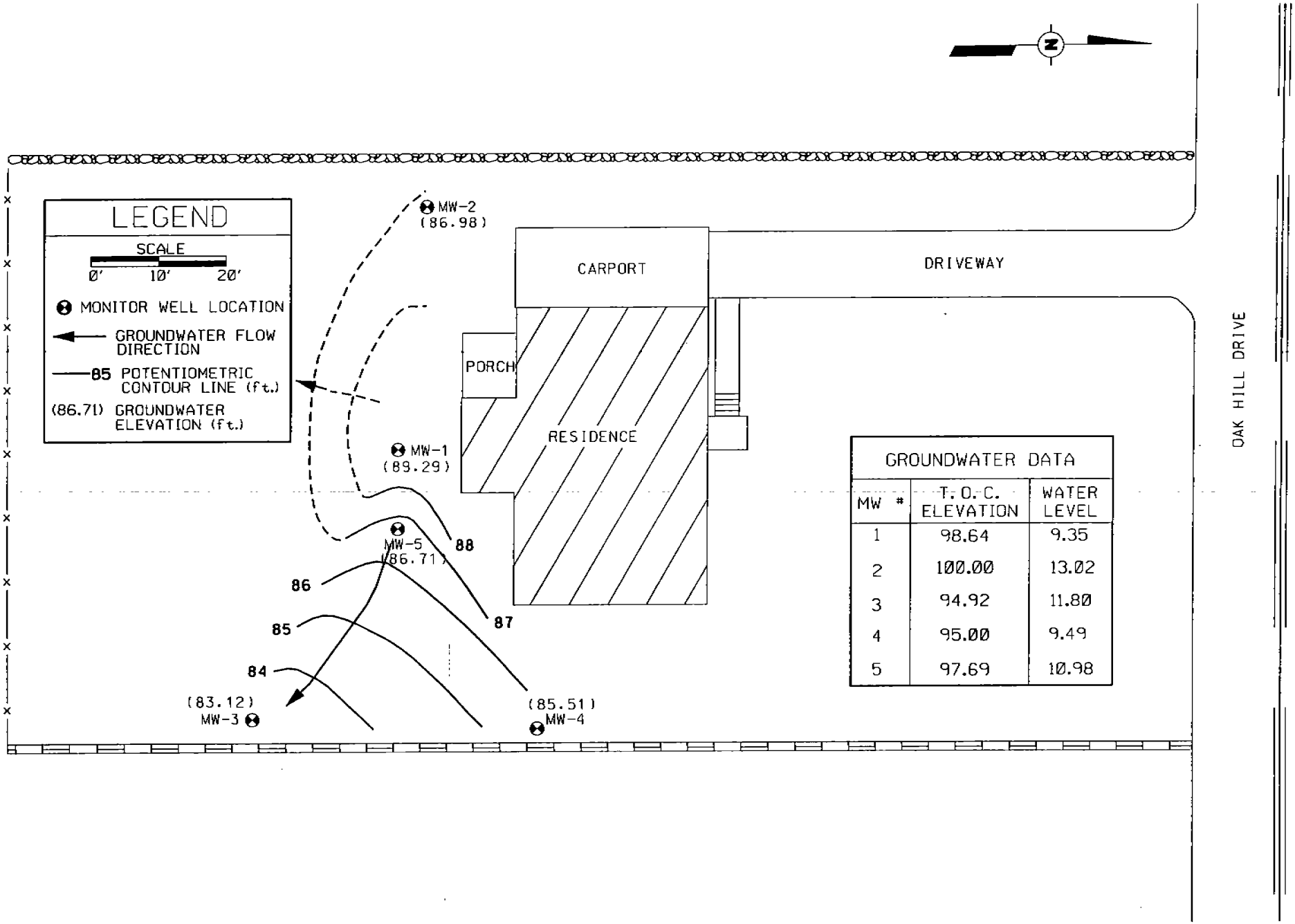

GROUNDWATER DATA

MW #	T. O. C. ELEVATION	WATER LEVEL
1	98.64	9.35
2	100.00	13.02
3	94.92	11.80
4	95.00	9.49
5	97.69	10.98

SCALE: 1"=20'	TITLE: POTENTIOMETRIC SURFACE MAP (AS MEASURED ON 2/17/95)	PROJECT: CSA 2205 OAK HILL DRIVE GREENSBORO, N.C.	CLIENT: MELVIN YARBOROUGH GREENSBORO, NC	LEGACY ENVIRONMENTAL SERVICES, INC. GREENSBORO, NORTH CAROLINA
DATE: 6/13/96				
DWN.BY: KBM				
DWG.# L94-133C				

FIGURE 7A

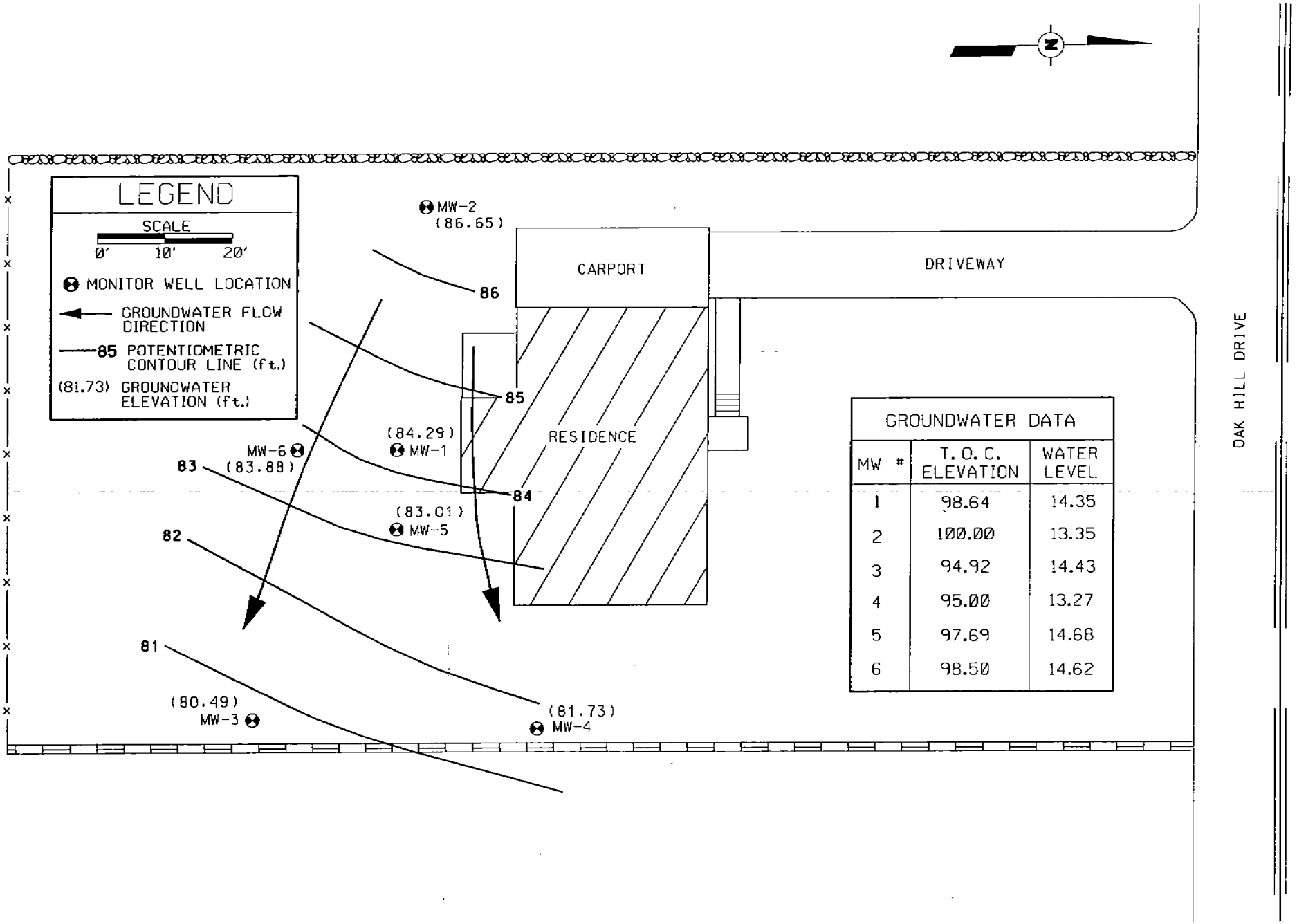

GROUNDWATER DATA

MW #	T. O. C. ELEVATION	WATER LEVEL
1	98.64	14.35
2	100.00	13.35
3	94.92	14.43
4	95.00	13.27
5	97.69	14.68
6	98.50	14.62

SCALE: 1"=20'	TITLE: POTENTIOMETRIC SURFACE MAP (AS MEASURED ON 5/31/96)	PROJECT: CSA 2205 OAK HILL DRIVE GREENSBORO, N.C.	CLIENT: MELVIN YARBOROUGH GREENSBORO, NC	LEGACY ENVIRONMENTAL SERVICES, INC. GREENSBORO, NORTH CAROLINA
DATE: 6/13/96				
DWN.BY: KBM				
DWG.# L94-133V				

FIGURE 8

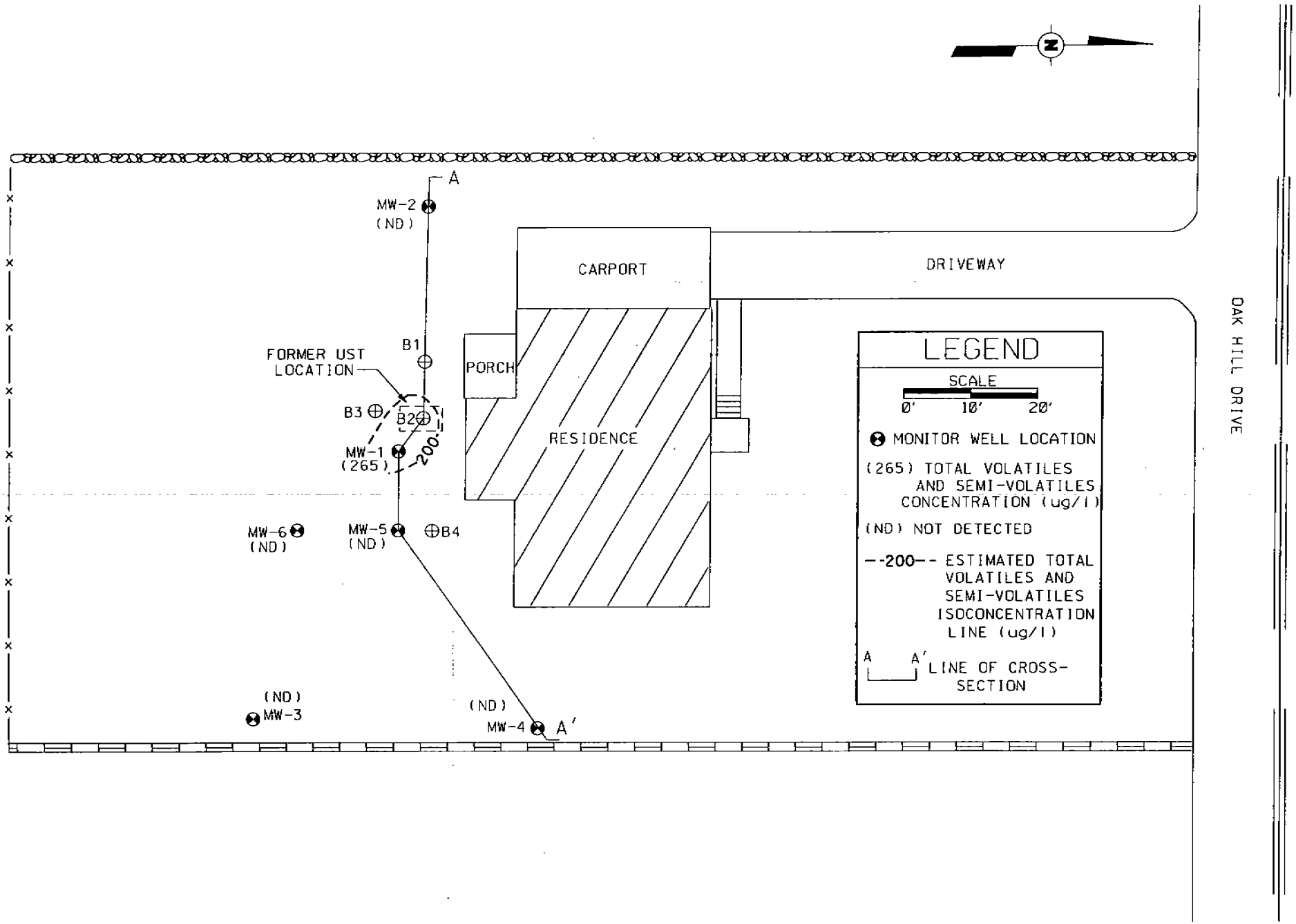

SCALE: 1"=20'	TITLE: TOTAL VOLATILES AND SEMI-VOLATILES ISOCONCENTRATION MAP	PROJECT: CSA 2205 OAK HILL DRIVE GREENSBORO, N.C.	CLIENT: MELVIN YARBOROUGH GREENSBORO, NC
DATE: 6/13/96			
DWN.BY: KBM			
DWG.# L94-133G			

LEGACY ENVIRONMENTAL SERVICES, INC.
GREENSBORO, NORTH CAROLINA

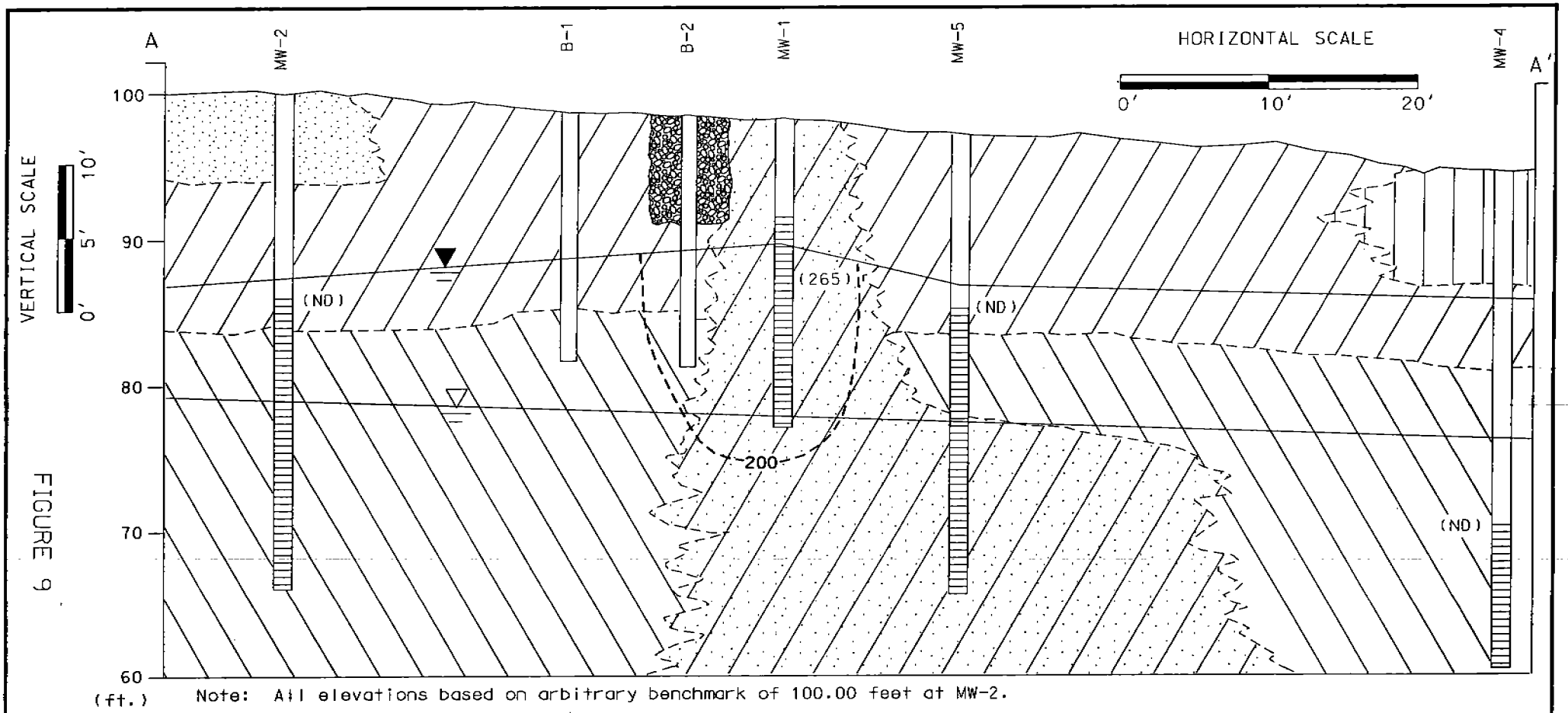

Note: All elevations based on arbitrary benchmark of 100.00 feet at MW-2.

FIGURE 9

LEGEND

- DARK RED TO LIGHT REDDISH-BROWN SILTS WITH VARYING CLAY CONTENT
- RED-BROWN TO TAN-BROWN CLAYS WITH VARYING SILT CONTENT
- RED SILT
- RED TO DARK RED CLAY WITH VARYING SILT CONTENT
- BROWN TO RED SILT WITH VARYING CLAY CONTENT AND VARYING AMOUNTS OF FINE AND MEDIUM GRAINED SAND
- BACKFILL
- ESTIMATED WATER TABLE (AS MEASURED 2-17-95)
- MONITOR WELL SCREENED INTERVAL
- ZONE OF GRADATIONAL CONTACT
- ESTIMATED WATER TABLE (AS MEASURED 12-13-94)
- 200 ESTIMATED TOTAL VOLATILES AND SEMI-VOLATILES ISOCONCENTRATION LINE (ug/l)
- (265) TOTAL VOLATILES AND SEMI-VOLATILES CONCENTRATION (ug/l)
- (ND) NOT DETECTED

SCALE: NTS DATE: 6/13/96 DWN.BY: KBM DWG.# L94-1331	TITLE: TOTAL VOLATILES AND SEMI-VOLATILES ISOCONCENTRATION CROSS SECTION A-A'	PROJECT: CSA 2205 OAK HILL DRIVE GREENSBORO, NC	CLIENT: MELVIN YARBOROUGH GREENSBORO, NC

LEGACY ENVIRONMENTAL SERVICES, INC.
GREENSBORO, NORTH CAROLINA

APPENDIX A

SOIL BORING LOGS

SOIL BORING LOG

Legacy Environmental Services, Inc.

Job Name: Melvin Yarborough property
Address: 2205 Oak Hill Dr.
Job No.: P-342
Start Date: 2/9/95
Driller: Legacy Environmental Services
Reg. No.: 1470
Boring No.: B-1, B-2, B-3, B-4
Comments:

Drilling Method: 4in. Solid Stem Auger
Sample Method: Cuttings Collected
Sampled By:
Logged By: TRR

Sample Number	Depth (ft.)	Soil Decription (color, soil type, moisture)	Blow Counts	OVA (ppm)
B-1	8	Red, SILT with some clay, damp		<10
	16	Light red, CLAY with some silt, damp		<10
B-2	8	Brown-tan, SILT with some clay, damp		<10
	16	Red-brown, CLAY with some silt, damp		56
B-3	8	Brown-tan, SILT with some clay, damp		<10
	16	Red-brown, CLAY with some silt, damp		<10
B-4	8	Brown-tan, SILT with some clay, damp		<10
	16	Red-brown, CLAY with some silt, damp		<10
	P-342F			

X94-200

SOIL BORING LOG

Legacy Environmental Services, Inc.

Job Name: Melvin Yarborough property
Address: 2205 Oak Hill Dr.
Job No.: P-342 | Drilling Method: 4in. Solid Stem Auger
Start Date: 3/18/94 | Sample Method: Cuttings Collected
Driller: Legacy Environmental Services | Sampled By: SVN
Reg. No.: 1470 | Logged By: SVN
Boring No.: MW-1
Comments:

Sample Number	Depth (ft.)	Soil Decription (color, soil type, moisture)	Blow Counts	OVA (ppm)
MW-1	3	red-brown, CLAY with medium sand, damp		<10
	6	red-brown, CLAY with medium sand, damp		<10
	9	red-brown, CLAY and SILT with fine sand, damp		63
	12	red-brown, CLAY and SILT with fine sand, damp		70
	15	red-brown, CLAY and SILT with fine sand, moist		138
	18	red-brown, CLAY and SILT with fine sand, wet		104
	21	red-brown, CLAY and SILT with fine sand, wet		48
		Boring terminated at 24 ft.		
	P-342E			

X94-200

SOIL BORING LOG

Legacy Environmental Services, Inc.

Job Name: Melvin Yarborough property
Address: 2205 Oak Hill Dr.
Job No.: P-342 | Drilling Method: 4in. Solid Stem Auger
Start Date: 12/13/94 | Sample Method: Cuttings Collected
Driller: Legacy Environmental Services | Sampled By:
Reg. No.: 1470 | Logged By: KBM
Boring No.: MW-2
Comments:

Sample Number	Depth (ft.)	Soil Decription (color, soil type, moisture)	Blow Counts	OVA (ppm)
MW-2	3	red, CLAY with trace silt, damp		<5
	6	red, CLAY with trace silt, damp		<5
	9	red, SILT with clay, damp		<5
	12	red, SILT with clay, damp		<5
	15	red, SILT with clay, damp		<5
	18	brown, CLAY with silt, damp		<5
	21	brown, CLAY with trace silt, moist		<5
	24	brown, CLAY with trace silt, moist		<5
	27	brown,CLAY with trace silt ,wet		<5
	30	brown,CLAY with trace silt ,wet		<5
	33	brown,CLAY with trace silt ,wet		<5
	36	brown,CLAY with trace silt ,wet		<5
		Boring terminated at 36'.		
	P-342B			

X94-200

SOIL BORING LOG

Legacy Environmental Services, Inc.

Job Name: Melvin Yarborough property
Address: 2205 Oak Hill Dr.
Job No.: P-342 | Drilling Method: 4in. Solid Stem Auger
Start Date: 12/13/94 | Sample Method: Cuttings Collected
Driller: Legacy Environmental Services | Sampled By:
Reg. No.: 1470 | Logged By: KBM
Boring No.: MW-3
Comments:

Sample Number	Depth (ft.)	Soil Decription (color, soil type, moisture)	Blow Counts	OVA (ppm)
MW-3	3	red, SILT, damp		<5
	6	red, SILT with trace clay, damp		<5
	9	red, SILT with trace clay, damp		<5
	12	red, SILT with trace clay, damp		<5
	15	red, CLAY with some silt, moist		<5
	18	brown, CLAY with some silt, moist		<5
	21	brown, CLAY with some silt, moist		<5
	24	brown, CLAY with trace silt, moist		<5
	27	brown, CLAY with some silt, wet		<5
	30	brown, CLAY with some silt, wet		<5
	33	brown, CLAY with some silt, wet		<5
	36	brown, CLAY with some silt, wet		<5
		Boring terminated at 36'.		
	P-342B			

X94-200

SOIL BORING LOG

Legacy Environmental Services, Inc.

Job Name: Melvin Yarborough property
Address: 2205 Oak Hill Dr.
Job No.: P-342
Start Date: 12/13/94
Driller: Legacy Environmental Services
Reg. No.: 1470
Boring No.: MW-4
Comments:

Drilling Method: 4in. Solid Stem Auger
Sample Method: Cuttings Collected
Sampled By:
Logged By: KBM

Sample Number	Depth (ft.)	Soil Decription (color, soil type, moisture)	Blow Counts	OVA (ppm)
MW_4	3	red, SILT, damp		<5
	6	red, SILT, damp		<5
	9	red, SILT with trace clay, damp		<5
	12	red, SILT with some clay, damp		<5
	15	brown, CLAY with some silt, moist		<5
	18	brown, CLAY with some silt, moist		<5
	21	brown, CLAY with some silt, moist		<5
	24	brown, CLAY with some silt, wet		<5
	27	brown, CLAY with some silt, wet		<5
	30	brown, CLAY with some silt, wet		<5
	33	brown, CLAY with some silt, wet		<5
	36	brown, CLAY with some silt, wet		<5
		Boring terminated at 36'.		
	P-342C			

X94-200

SOIL BORING LOG

Legacy Environmental Services, Inc.

Job Name: Melvin Yarborough property
Address: 2205 Oak Hill Dr.
Job No.: P-342 | Drilling Method: 4" Solid Stem Auger
Start Date: 12/13/94 | Sample Method: Cuttings Collected
Driller: Legacy Environmental Services | Sampled By:
Reg. No.: 1470 | Logged By: TRR
Boring No.: MW-5
Comments:

Sample Number	Depth (ft.)	Soil Decription (color, soil type, moisture)	Blow Counts	OVA (ppm)
MW-5	3	Dark red, SILT with some clay, Damp		<5
	6	Dark red, SILT with trace clay, Damp		<5
	9	Dark red, SILT with trace clay, Damp		<5
	12	Light red, SILT with some clay, Damp		<5
	15	Light red, CLAY with some silt, Moist		<5
	18	Light red, CLAY with some silt, Moist		<5
	21	Brown-red, SILT with little clay, trace of medium sand, Moist		<5
	24	Same as 21'		<5
	27	Brown, SILT with little clay, trace of fine to medium sand, Wet		<5
	30	Same as 27'		<5
		No soils logged after 30'		
		Boring terminated at 36'.		
	P-342D			

X94-200

SOIL BORING LOG

Legacy Environmental Services, Inc.

Job Name: Andy Clark Residence
Address: Oak Hill Drive Greensboro, NC
Job No.: P-342
Start Date: 5/30/96
Driller: Legacy Environmental Services
Reg. No.: 1470
Boring No.: MW-6
Comments:

Drilling Method: 6" Hollow Stem Auger
Sample Method: Split Spoon
Sampled By: KBM
Logged By: KBM

Sample Number	Depth (ft.)	Soil Decription (color, soil type, moisture)	Blow Counts	OVA (ppm)
MW-6	5	red-brown, SILT with clay, damp		<10
	10	red, CLAY with silt, damp		<10
	15	same as 10 ft.		<10
	20	red, SILT with clay, moist		<10
	25	orange-tan, SILT with clay, moist		<10
		Boring terminated at 28 ft.		
P-342				

X94-200

APPENDIX B

STANDARD OPERATING PROCEDURES

STANDARD OPERATING PROCEDURES
LEGACY ENVIRONMENTAL SERVICES, INC.

I. FIELD SCREENING OF SOILS

1. Calibrate instrument prior to use in accordance with manufacturer's recommended procedures and certified calibration gas standard. Calibrate PIDs with isobutylene standards; FID with methane gas standards.

2. Collect soil samples using decontaminated augers or other sampling devices. Using disposable Latex gloves, place soils in a "zip-lock" type plastic bag, agitate and allow to equilibrate in sunlight for a minimum of 15 minutes.

3. Insert tip of field sampling equipment into sample bag, approximately 1/2" from soil, leaving bag sealed as much as practical.

4. After reading has stabilized, record sample number and contaminant level in parts per million.

5. Checked instrument for drift using the standard calibration gas at intervals between sampling and at the end of the days use. Recalibrate instrument as necessary.

II. SAMPLE HANDLING

1. Samples collected for laboratory analysis should be handled using disposable Latex gloves. Do not re-use gloves.

2. Place samples into laboratory supplied glassware, in a quantity sufficient for laboratory analyses to be conducted and with minimization of head-space. Tighten sample jar lid securely.

3. Label samples with sample ID, time sampled, date, and analyses to be performed. Immediately place sample containers on ice and cool to approximately 4 degrees Celsius.

4. Store all samples on ice or refrigerate until delivered to certified laboratory.

5. Complete a chain of custody (COC) record for laboratory samples; sign and date COC when samples are relinquished in accordance with EPA chain of custody protocol.

III. WELL DEVELOPMENT & SAMPLING - BALER METHOD

1. Compute volume of the water in well to be sampled. Volume of 2" well is 0.163 gallons/foot; Volume of 4" well is 0.653 gallons/foot.

2. Use new disposable baler to develop well and collect sample. Submerse baler with new nylon string. Handle baler and string with disposable Latex gloves.

3. Develop well by removing 3 volumes of water with baler. Empty baler into 5 gallon bucket, 55 gallon drum or other container. Handle and dispose of water properly.

4. Allow well at least 24 hours to recover, then re-develop by removing 3 volumes of water or removing water until stable readings of pH, temperature, and conductivity are obtained.

5. After well development, obtain water sample. Place water sample into laboratory supplied glassware. Fill volatile organic containers completely full, allowing no air bubbles. Fill semi-volatile sample containers as directed by laboratory performing analyses.

6. Transport and handle samples in accordance with Legacy Standard Operating Procedure "Sample Handling".

IV. EQUIPMENT DECONTAMINATION

1. Decontaminate augers, split spoons and other sampling equipment at staged decontamination area via the following procedure:

   A. Soap and tap water wash;
   B. Tap water rinse;
   C. Distilled deionized water rinse;
   D. Isopropyl alcohol rinse;
   E. Double distilled water rinse.

2. Where practical, use new disposable sampling equipment.

APPENDIX C

SOIL ANALYTICAL RESULTS

Water Technology And Controls, INC.
Water Treatment Chemistries & Environmental Laboratory
Reidsville, North Carolina 27320
(910) 342-4748

February 16, 1995
Project: Yarboro Property
Project Number: P-324D
Sample Collection Date: 2-9-95

Metals by EPA Method 3030C	MW-1	MW-2	MW-3	MW-4	MW-5
Lead (mg/L)	< 0.012	< 0.012	0.045	0.020	< 0.012

California TPH Method 3550	B1-8	B1-16	B2-8	B2-16	B3-8	B3-16	B4-8	B4-16
(mg/kg)	< 40.0	< 40.0	120	820	< 40.0	425	< 40.0	< 40.0

LEGACY ENVIRONMENTAL SERVICES, INC.

P.O. Box 4560, Greensboro, NC 27404-4560, Phone (910) 316-0452, FAX (910) 299-1961

CHAIN OF CUSTODY RECORD

FACILITY: Yarboro Property

LES JOB#: P-342D

SAMPLERS (Signature) Jon Kirby

SAMPLE NUMBER	SAMPLE LOCATION	DATE	TIME	SAMPLE TYPE WATER COMP	SAMPLE TYPE WATER GRAB	SAMPLE TYPE SOIL	NO. OF CONT.	ANALYSIS REQUIRED
B1-8	Boring # 1, 8' deep	2/9/95	4:00p			X	1	EPA 3550
B1-16	" 1, 16' "		4:10p			X	1	
B2-8	" 2, 8' "		4:26p			X	1	
B2-16	" 2 16' "		4:36p			X	1	
B3-8	" 3 8' "		4:55p			X	1	
B3-16	" 3 16' "		5:05p			X	1	
B4-8	" 4 8' "		5:20p			X	1	
B4-16	" 4 16' "		5:31p			X	1	
MW-1	Monitor Well # 1		4:50p		X			Std. Method 3030C
MW-2	# 2		4:55p		X			
MW-3	# 3		5:00		X			
MW-4	# 4		5:05		X			
MW-5	# 5		5:10		X			

Relinquished by: (Signature)	Received by: (Signature)	Date/Time
Jon Kirby		
Relinquished by: (Signature)	Received by: (Signature)	Date/Time
Relinquished by: (Signature)	Received by: (Signature)	Date/Time
Methods of Shipment	Received for Laboratory by:	Date/Time
Conditions upon receipt	Remarks:	

342-E

HYDROLOGIC, INC.

FINAL REPORT OF ANALYSES

Legacy Environmental
P.O. Box 4560
Greensboro, NC 27404-

REPORT DATE: 03/28/95

SAMPLE NUMBER- 6655 SAMPLE ID- Boring 1 @ 8' SAMPLE MATRIX- SO
DATE SAMPLED- 03/20/95 TIME SAMPLED- 415
DATE RECEIVED- 03/21/95 SAMPLER- T. Rigby RECEIVED BY- TWM
TIME RECEIVED- 845 DELIVERED BY- FED X

Page 1 of 1

ANALYSIS	METHOD	ANALYSIS DATE	BY	RESULT	UNITS	DET. LIMIT
TPH Gasoline, Solid	5030/8015	03/21/95	TWM	< 2.0	mg/kg	2.0

Heavy fuel present.

LABORATORY DIRECTOR Gerry Clanahan

FINAL REPORT OF ANALYSES

Legacy Environmental
P.O. Box 4560
Greensboro, NC 27404-

REPORT DATE: 03/28/95

SAMPLE NUMBER- 6656 SAMPLE ID- Boring 1 @ 16'
DATE SAMPLED- 03/20/95
DATE RECEIVED- 03/21/95 SAMPLER- T. Rigby
TIME RECEIVED- 845 DELIVERED BY- FED X

SAMPLE MATRIX- SO
TIME SAMPLED- 420
RECEIVED BY- TWM

Page 1 of 1

ANALYSIS	METHOD	ANALYSIS DATE	BY	RESULT	UNITS	DET. LIMIT
TPH Gasoline, Solid	5030/8015	03/21/95	TWM	4.4	mg/kg	2.0

Heavy fuel present.

LABORATORY DIRECTOR Leon J. Clanahan

FINAL REPORT OF ANALYSES

Legacy Environmental
P.O. Box 4560
Greensboro, NC 27404-

REPORT DATE: 03/28/95

SAMPLE NUMBER- 6657 SAMPLE ID- Boring 2 @ 8' SAMPLE MATRIX- SO
DATE SAMPLED- 03/20/95 TIME SAMPLED- 433
DATE RECEIVED- 03/21/95 SAMPLER- T. Rigby RECEIVED BY- TWM
TIME RECEIVED- 845 DELIVERED BY- FED X

Page 1 of 1

ANALYSIS	METHOD	ANALYSIS DATE	BY	RESULT	UNITS	DET. LIMIT
TPH Gasoline, Solid	5030/8015	03/21/95	TWM	< 2.0	mg/kg	2.0

LABORATORY DIRECTOR Terry L. Clarahan

FINAL REPORT OF ANALYSES

Legacy Environmental
P.O. Box 4560
Greensboro, NC 27404-

REPORT DATE: 03/28/95

SAMPLE NUMBER- 6658 SAMPLE ID- Boring 2 @ 16' SAMPLE MATRIX- SO
DATE SAMPLED- 03/20/95 TIME SAMPLED- 440
DATE RECEIVED- 03/21/95 SAMPLER- T. Rigby RECEIVED BY- TWM
TIME RECEIVED- 845 DELIVERED BY- FED X

Page 1 of 1

ANALYSIS	METHOD	ANALYSIS DATE	BY	RESULT	UNITS	DET. LIMIT
TPH Gasoline, Solid	5030/8015	03/21/95	TWM	< 2.0	mg/kg	2.0

Heavy fuel present.

LABORATORY DIRECTOR Terry McClanahan

FINAL REPORT OF ANALYSES

Legacy Environmental
P.O. Box 4560
Greensboro, NC 27404-

REPORT DATE: 03/28/95

SAMPLE NUMBER- 6659 SAMPLE ID- Boring 3 @ 8' SAMPLE MATRIX- SO
DATE SAMPLED- 03/20/95 TIME SAMPLED- 447
DATE RECEIVED- 03/21/95 SAMPLER- T. Rigby RECEIVED BY- TWM
TIME RECEIVED- 845 DELIVERED BY- FED X

Page 1 of 1

ANALYSIS	METHOD	ANALYSIS DATE	BY	RESULT	UNITS	DET. LIMIT
TPH Gasoline, Solid	5030/8015	03/21/95	TWM	< 2.0	mg/kg	2.0

LABORATORY DIRECTOR Terry McClanahan

FINAL REPORT OF ANALYSES

Legacy Environmental
P.O. Box 4560
Greensboro, NC 27404-

REPORT DATE: 03/28/95

SAMPLE NUMBER- 6660 SAMPLE ID- Boring 3 @ 16'
DATE SAMPLED- 03/20/95
DATE RECEIVED- 03/21/95 SAMPLER- T. Rigby
TIME RECEIVED- 845 DELIVERED BY- FED X

SAMPLE MATRIX- SO
TIME SAMPLED- 453
RECEIVED BY- TWM

ANALYSIS	METHOD	ANALYSIS DATE	BY	RESULT	UNITS	DET. LIMIT
TPH Gasoline, Solid	5030/8015	03/21/95	TWM	< 2.0	mg/kg	2.0

LABORATORY D Terry McClanahan

FINAL REPORT OF ANALYSES

Legacy Environmental
P.O. Box 4560
Greensboro, NC 27404-

REPORT DATE: 03/28/95

SAMPLE NUMBER- 6661
DATE SAMPLED- 03/20/95
DATE RECEIVED- 03/21/95
TIME RECEIVED- 845

SAMPLE ID- Boring 4 @ 8'
SAMPLER- T. Rigby
DELIVERED BY- FED X

SAMPLE MATRIX- SO
TIME SAMPLED- 500
RECEIVED BY- TWM

Page 1 of 1

ANALYSIS	METHOD	ANALYSIS DATE	BY	RESULT	UNITS	DET. LIMIT
TPH Gasoline, Solid	5030/8015	03/21/95	TWM	< 2.0	mg/kg	2.0

LABORATORY DIRECTOR Terry Flanahan

H Y D R O L O G I C , I N C .

FINAL REPORT OF ANALYSES

Legacy Environmental
P.O. Box 4560
Greensboro, NC 27404-

REPORT DATE: 03/28/95

SAMPLE NUMBER- 6662 SAMPLE ID- Boring 4 @ 16' SAMPLE MATRIX- SO
DATE SAMPLED- 03/20/95 TIME SAMPLED- 505
DATE RECEIVED- 03/21/95 SAMPLER- T. Rigby RECEIVED BY- TWM
TIME RECEIVED- 845 DELIVERED BY- FED X

Page 1 of 1

ANALYSIS	METHOD	ANALYSIS DATE	BY	RESULT	UNITS	DET. LIMIT
TPH Gasoline, Solid	5030/8015	03/21/95	TWM	< 2.0	mg/kg	2.0

LABORATORY DIRECTOR Tim McClanahan

410 New Salem Hwy. • Suite 106 • Murfreesboro, TN 37129 • (615) 848-6810 • FAX (615) 848-0806

LEGACY ENVIRONMENTAL SERVICES, INC.

P.O. Box 4560, Greensboro, NC 27404-4560, Phone (910) 316-0452, FAX (910) 299-1961

CHAIN OF CUSTODY RECORD

FACILITY: YARBROUGH PROPERTY

LES JOB#: P-342E

SAMPLERS (Signature) Tom Kingley Printed Name: Tom Kingley

	SAMPLE NUMBER	SAMPLE LOCATION	DATE	TIME	SAMPLE TYPE WATER COMP	SAMPLE TYPE WATER GRAB	SAMPLE TYPE SOIL	NO. OF CONT.	ANALYSIS REQUIRED
6655	B1-8	Boring 1 at 8'	3/21/95	4:15p			X	1	5030
6656	B1-16	1 " 16'		4:20p			X	1	
6657	B2-8	2 " 8'		4:33p			X	1	
6658	B2-16	2 " 16'		4:40p			X	1	
6659	B3-8	3 " 8'		4:47p			X	1	
6660	B3-16	3 " 16'		4:53p			X	1	
6661	B4-8	4 " 8'		5:00p			X	1	
6662	B4-16	4 " 16'		5:05p			X	1	

Note: Our written purchase order accompanied by this record is your notice to proceed.

Relinquished by: (Signature)	Received by: (Signature)	Date/Time
Tom Kingley	Jim McClanahan	3/21/95 9:00a
Relinquished by: (Signature)	**Received by:** (Signature)	**Date/Time**
Relinquished by: (Signature)	**Received by:** (Signature)	**Date/Time**
Methods of Shipment FED X	**Received for Laboratory by:**	**Date/Time**

Conditions upon receipt	Remarks:

SINCE 1881

FROEHLING & ROBERTSON, INC.

GEOTECHNICAL • ENVIRONMENTAL • MATERIALS
ENGINEERS • LABORATORIES
"OVER ONE HUNDRED YEARS OF SERVICE"

CERTIFICATE OF ANALYSIS

June 5, 1996

LAB #: 9605227
CLIENT: Legacy Environmental Services, Inc.
P.O. Box 4560
Greensboro, NC 27404-4560
Attn: Henry Nemargut

PROJECT: Yarboro Property

PROJECT #: P-342

SAMPLES COLLECTED BY: H. Nemargut
LAB RECEIPT: 05/31/96, 1318

PARAMETER	ANALYSIS DATE/TIME	METHOD	ANALYST
TPH-GC High BP	06/04/96, 1000	SW846/Cal/8015m	KR
TPH-GC Low BP	06/03/96, 1226	SW846/5030/8015	KR

RESULTS:

F&R #: 9605227-01
SAMPLE ID: B#5, 15'
DATE/TIME: 05/30/96, 1400
TYPE: Soil

		Det'n Limit:
TPH-GC High BP	BDL	8
TPH-GC Low BP	BDL	5

All units are mg/kg.

mg/kg = milligram per kilogram **BDL** = Below Detection Limit

Note: Soil results reported on dry weight basis unless otherwise noted.

Audrey N. Brubeck

Audrey N. Brubeck
Laboratory Supervisor

AB/psg

HEADQUARTERS: 3015 DUMBARTON ROAD • BOX 27524 • RICHMOND, VA 23261-7524
TELEPHONE (804) 264-2701 • FAX (804) 264-1202

BRANCHES: ASHEVILLE, NC • BALTIMORE, MD • CHARLOTTE, NC • CHESAPEAKE, VA
CROZET, VA • FAYETTEVILLE, NC • FREDERICKSBURG, VA
GREENVILLE, SC • RALEIGH, NC • ROANOKE, VA • STERLING, VA

LEGACY ENVIRONMENTAL SERVICES, INC.

P.O. Box 4560, Greensboro, NC 27404-4560, Phone (910) 316-0452, FAX (910) 299-1961

9605227

CHAIN OF CUSTODY RECORD

FACILITY: Yarboro Property

LES JOB#: P-342

SAMPLERS (Signature) Henry Nemnez

SAMPLE NUMBER	SAMPLE LOCATION	DATE	TIME	SAMPLE TYPE WATER COMP	SAMPLE TYPE WATER GRAB	SAMPLE TYPE SOIL	NO. OF CONT.	ANALYSIS REQUIRED
01 BS-15	Boring #5, 15' Deep	5-30-96	2:00p			X	1	5030/3550

Relinquished by: (Signature) Henry Nemnez	Received by: (Signature) [illegible]	Date/Time 5/31/96, 1318
Relinquished by: (Signature)	Received by: (Signature)	Date/Time
Relinquished by: (Signature)	Received by: (Signature)	Date/Time
Methods of Shipment	Received for Laboratory by:	Date/Time
Conditions upon receipt	Remarks: Rec'd on ice, 4°C	

APPENDIX D

WELL CONSTRUCTION RECORDS

North Carolina - Department of Environment, Health, and Natural Resources
Division of Environmental Management - Groundwater Section
P.O. Box 29535 - Raleigh, N.C. 27626-0535
Phone (919) 733-3221

FOR OFFICE USE ONLY
QUAD. NO. SERIAL NO.
Lat. Long. RO
Minor Basin
Basin Code
Header Ent. GW-1 Ent.

WELL CONSTRUCTION RECORD

DRILLING CONTRACTOR: Legacy Environmental

DRILLER REGISTRATION NUMBER: 1470

STATE WELL CONSTRUCTION PERMIT NUMBER:

1. WELL LOCATION: (Show sketch of the location below)
Nearest Town: Greensboro County: Guilford
2205 Oak Hill Dr.
(Road, Community, or Subdivision and Lot No.)
2. OWNER Melvin Yarborough
ADDRESS 1072 Tarry Church Rd.
(Street or Route No.)
Star NC 27356
City or Town State Zip Code
3. DATE DRILLED 3/18/94 USE OF WELL Monitor
4. TOTAL DEPTH 22'
5. CUTTINGS COLLECTED YES [x] NO [ ]
6. DOES WELL REPLACE EXISTING WELL? YES [ ] NO [x]
7. STATIC WATER LEVEL Below Top of Casing: 13.21 FT.
(Use "+" if Above Top of Casing)
8. TOP OF CASING IS 0 FT. Above Land Surface*
* Casing Terminated at/or below land surface is illegal unless a variance is issued in accordance with 15A NCAC 2C .0118
9. YIELD (gpm): METHOD OF TEST
10. WATER ZONES (depth):
11. CHLORINATION: Type Amount
12. CASING:

	Depth From	Depth To	Diameter	Wall Thickness or Weight/Ft.	Material
	0	7	2"	Sch 40	PVC

13. GROUT:

	Depth From	Depth To	Material	Method
	0	5	Portland	Hand Mix

14. SCREEN:

	Depth From	Depth To	Diameter	Slot Size	Material
	7	22	2"	.01"	Sch 40 PVC

15. SAND/GRAVEL PACK:

	Depth From	Depth To	Size	Material
	6	22	#2	Wash Sand

16. REMARKS: LES Job # P-342 Well ID # MW-1 Document #

DEPTH From	DEPTH To	DRILLING LOG Formation Description
0	6	red-brown, clay w/ sand
6	21	red-brown, clay & silt w/ fine sand

If additional space is needed use back of form

LOCATION SKETCH
(Show direction and distance from at least two State Roads, or other map reference points)

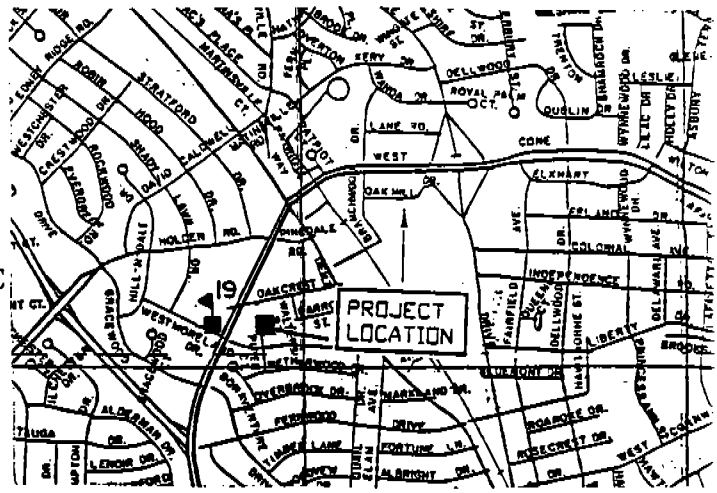

I DO HEREBY CERTIFY THAT THIS WELL WAS CONSTRUCTED IN ACCORDANCE WITH 15A NCAC 2C, WELL CONSTRUCTION STANDARDS, AND THAT A COPY OF THIS RECORD HAS BEEN PROVIDED TO THE WELL OWNER.

SIGNATURE OF CONTRACTOR OR AGENT DATE

Submit original to Division of Environmental Management and copy to well owner.

GW-1 REV. 9/91

North Carolina - Department of Environment, Health, and Natural Resources
Division of Environmental Management - Groundwater Section
P.O. Box 29535 - Raleigh, N.C. 27626-0535
Phone (919) 733-3221

FOR OFFICE USE ONLY
QUAD. NO. ____ SERIAL NO. ____
Lat. ____ Long. ____ RO ____
Minor Basin ____
Basin Code ____
Header Ent ____ GW-1 Ent ____

WELL CONSTRUCTION RECORD

DRILLING CONTRACTOR: Legacy Environmental

DRILLER REGISTRATION NUMBER: 1470

STATE WELL CONSTRUCTION PERMIT NUMBER: ____

1. WELL LOCATION: (Show sketch of the location below)
   Nearest Town: Greensboro County: Guilford
   2205 Oak Hill Dr.
   (Road, Community, or Subdivision and Lot No.)
2. OWNER Melvin Yarborough
   ADDRESS 1072 Tarry Church Rd.
   (Street or Route No.)
   Star (City or Town) NC (State) 27356 (Zip Code)
3. DATE DRILLED 12/13/94 USE OF WELL Monitor
4. TOTAL DEPTH 34
5. CUTTINGS COLLECTED YES [x] NO [ ]
6. DOES WELL REPLACE EXISTING WELL? YES [ ] NO [x]
7. STATIC WATER LEVEL Below Top of Casing: 21.24 FT.
   (Use "+" if Above Top of Casing)
8. TOP OF CASING IS .5 FT. Above Land Surface*
   * Casing Terminated at/or below land surface is illegal unless a variance is issued in accordance with 15A NCAC 2C .0118
9. YIELD (gpm): ____ METHOD OF TEST ____
10. WATER ZONES (depth): ____
11. CHLORINATION: Type ____ Amount ____
12. CASING:

	Depth From	Depth To	Ft.	Diameter	Wall Thickness or Weight/Ft.	Material
	0	14		2"	Sch 40	PVC

13. GROUT:

	Depth From	Depth To	Ft.	Material	Method
	0	10		Portland	Hand Mix

14. SCREEN:

	Depth From	Depth To	Ft	Diameter	in.	Slot Size	in.	Material
	14	34		2"		.01"		PVC

15. SAND/GRAVEL PACK:

	Depth From	Depth To	Ft.	Size	Material
	12	34		#2	Wash Sand

16. REMARKS: LES Job # P-342 Well ID # MW-2 Document #

DEPTH From	DEPTH To	DRILLING LOG Formation Description
0	6	red, damp clay w/ trace silt
6	15	red. damp silt w/ some clay
15	21	brown, moist clay w/ little silt
21	36	brown, wet clay w/ trace silt

If additional space is needed use back of form

LOCATION SKETCH
(Show direction and distance from at least two State Roads, or other map reference points)

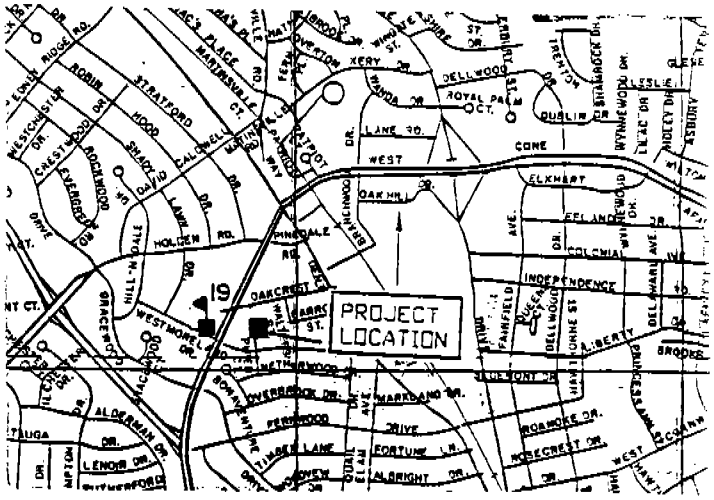

I DO HEREBY CERTIFY THAT THIS WELL WAS CONSTRUCTED IN ACCORDANCE WITH 15A NCAC 2C, WELL CONSTRUCTION STANDARDS, AND THAT A COPY OF THIS RECORD HAS BEEN PROVIDED TO THE WELL OWNER.

SIGNATURE OF CONTRACTOR OR AGENT DATE

Submit original to Division of Environmental Management and copy to well owner.

GW-1 REV. 9/91

North Carolina - Department of Environment, Health, and Natural Resources
Division of Environmental Management - Groundwater Section
P.O. Box 29535 - Raleigh, N.C. 27626-0535
Phone (919) 733-3221

FOR OFFICE USE ONLY	
QUAD. NO.	SERIAL NO.
Lat.	Long. RO
Minor Basin	
Basin Code	
Header Ent.	GW-1 Ent.

WELL CONSTRUCTION RECORD

DRILLING CONTRACTOR: Legacy Environmental

DRILLER REGISTRATION NUMBER: 1470

STATE WELL CONSTRUCTION PERMIT NUMBER:

1. WELL LOCATION: (Show sketch of the location below)
   Nearest Town: Greensboro County: Guilford
   2205 Oak Hill Drive
   (Road, Community, or Subdivision and Lot No.)
2. OWNER Melvin Yarborough
   ADDRESS 1072 Tarry Church Rd.
   (Street or Route No.)
   Star (City or Town) NC (State) 27356 (Zip Code)
3. DATE DRILLED 12/13/94 USE OF WELL Monitor
4. TOTAL DEPTH 34'
5. CUTTINGS COLLECTED YES [x] NO [ ]
6. DOES WELL REPLACE EXISTING WELL? YES [ ] NO [ ]
7. STATIC WATER LEVEL Below Top of Casing: 20.36 FT.
   (Use "+" if Above Top of Casing)
8. TOP OF CASING IS .5 FT. Above Land Surface*
   * Casing Terminated at/or below land surface is illegal unless a variance is issued in accordance with 15A NCAC 2C .0118
9. YIELD (gpm): _____ METHOD OF TEST _____
10. WATER ZONES (depth): _____
11. CHLORINATION: Type _____ Amount _____
12. CASING:

	Depth From	Depth To	Diameter	Wall Thickness or Weight/Ft.	Material
	0	14	2"	Sch 40	PVC

13. GROUT:

	Depth From	Depth To	Material	Method
	0	10	Portland	Hand Mix

14. SCREEN:

	Depth From	Depth To	Diameter	Slot Size	Material
	14	34	2 in.	.01" in.	Sch 40 PVC
			in.	in.	
			in.	in.	

15. SAND/GRAVEL PACK:

	Depth From	Depth To	Size	Material
	12	34	#2	Wash Sand

16. REMARKS: LES Job # P-342 Well ID # MW-3 Document #

DEPTH From	DEPTH To	DRILLING LOG Formation Description
0	12	red, damp silt w/ trace or no clay
12	18	red, clay w/ some silt, damp
18	36	brown, moist to wet clay w/ some silt

If additional space is needed use back of form

LOCATION SKETCH
(Show direction and distance from at least two State Roads, or other map reference points)

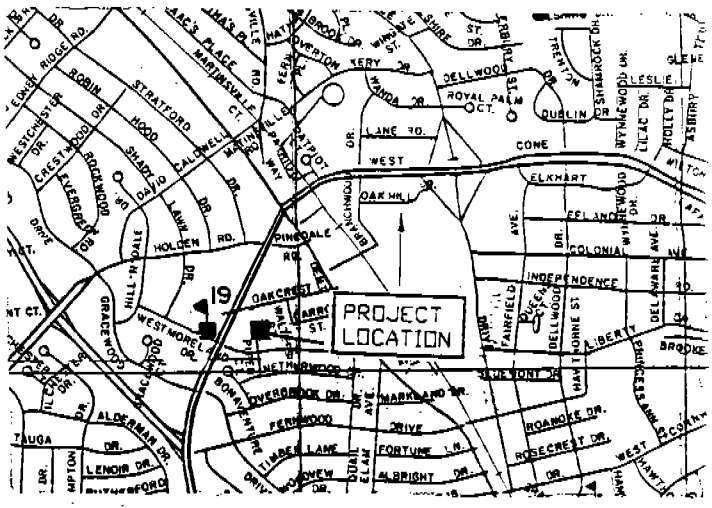

I DO HEREBY CERTIFY THAT THIS WELL WAS CONSTRUCTED IN ACCORDANCE WITH 15A NCAC 2C, WELL CONSTRUCTION STANDARDS, AND THAT A COPY OF THIS RECORD HAS BEEN PROVIDED TO THE WELL OWNER.

SIGNATURE OF CONTRACTOR OR AGENT DATE

Submit original to Division of Environmental Management and copy to well owner.

GW-1 REV. 9/91

North Carolina - Department of Environment, Health, and Natural Resources
Division of Environmental Management - Groundwater Section
P.O. Box 29535 - Raleigh, N.C. 27626-0535
Phone (919) 733-3221

FOR OFFICE USE ONLY
QUAD. NO. ____ SERIAL NO. ____
Lat. ____ Long. ____ RO ____
Minor Basin ____
Basin Code ____
Header Ent. ____ GW-1 Ent. ____

WELL CONSTRUCTION RECORD

DRILLING CONTRACTOR: Legacy Environmental

DRILLER REGISTRATION NUMBER: 1470

STATE WELL CONSTRUCTION PERMIT NUMBER: ____

1. WELL LOCATION: (Show sketch of the location below)
   Nearest Town: Greensboro County: Guilford
   2205 Oak Hill Dr.
   (Road, Community, or Subdivision and Lot No.)
2. OWNER Melvin Yarborough
   ADDRESS 1072 Tarry Church Rd.
   (Street or Route No.)
   Star NC 27356
   City or Town State Zip Code
3. DATE DRILLED 12/13/94 USE OF WELL Monitor
4. TOTAL DEPTH 34'
5. CUTTINGS COLLECTED YES [x] NO [ ]
6. DOES WELL REPLACE EXISTING WELL? YES [ ] NO [x]
7. STATIC WATER LEVEL Below Top of Casing: 19.14 FT.
   (Use "+" if Above Top of Casing)
8. TOP OF CASING IS .5 FT. Above Land Surface*
   * Casing Terminated at/or below land surface is illegal unless a variance is issued in accordance with 15A NCAC 2C .0118
9. YIELD (gpm): ____ METHOD OF TEST ____
10. WATER ZONES (depth): ____
11. CHLORINATION: Type ____ Amount ____
12. CASING:

	Depth From	Depth To	Diameter	Wall Thickness or Weight/Ft.	Material
	0	24	2	Sch 40	PVC

13. GROUT:

	Depth From	Depth To	Material	Method
	0	20	Portland	Hand Mix

14. SCREEN:

	Depth From	Depth To	Diameter	Slot Size	Material
	24	34	2 in.	.01 in.	Sch 40 PVC
			in.	in.	
			in.	in.	

15. SAND/GRAVEL PACK:

	Depth From	Depth To	Size	Material
	22	34	#2	Wash Sand

16. REMARKS: LES Job # P-342 Well ID # MW-4 Document #

DEPTH From	DEPTH To	DRILLING LOG Formation Description
0	12	red, damp silt w/ trace to some clay
12	21	brown, moist clay w/ some silt
21	36	brown, wet clay w/ some silt

If additional space is needed use back of form

LOCATION SKETCH
(Show direction and distance from at least two State Roads, or other map reference points)

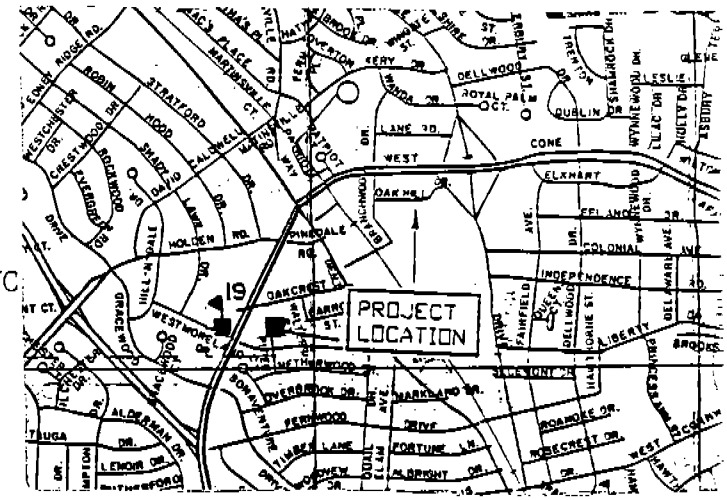

I DO HEREBY CERTIFY THAT THIS WELL WAS CONSTRUCTED IN ACCORDANCE WITH 15A NCAC 2C, WELL CONSTRUCTION STANDARDS, AND THAT A COPY OF THIS RECORD HAS BEEN PROVIDED TO THE WELL OWNER.

SIGNATURE OF CONTRACTOR OR AGENT DATE

Submit original to Division of Environmental Management and copy to well owner.

GW-1 REV. 9/91

North Carolina - Department of Environment, Health, and Natural Resources
Division of Environmental Management - Groundwater Section
P.O. Box 29535 - Raleigh, N.C. 27626-0535
Phone (919) 733-3221

FOR OFFICE USE ONLY	
QUAD. NO.	SERIAL NO.
Lat.	Long. RO
Minor Basin	
Basin Code	
Header Ent.	GW-1 Ent.

WELL CONSTRUCTION RECORD

DRILLING CONTRACTOR: Legacy Environmetal Services, Inc.

DRILLER REGISTRATION NUMBER: 1470

STATE WELL CONSTRUCTION PERMIT NUMBER:

1. WELL LOCATION: (Show sketch of the location below)
Nearest Town: Greensboro County: Guilford
2205 Oak Hill Drive
(Road, Community, or Subdivision and Lot No.)

2. OWNER Melvin Yarborough
ADDRESS 1072 Tarry Church Rd
(Street or Route No.)
Star, NC 27356
City or Town State Zip Code

3. DATE DRILLED 3-18-94 USE OF WELL monitor
4. TOTAL DEPTH 22'
5. CUTTINGS COLLECTED YES [X] NO [ ]
6. DOES WELL REPLACE EXISTING WELL? YES [ ] NO [X]
7. STATIC WATER LEVEL Below Top of Casing: 10.98 FT.
(Use "+" if Above Top of Casing)
8. TOP OF CASING IS 0 FT. Above Land Surface*
* Casing Terminated at/or below land surface is illegal unless a variance is issued in accordance with 15A NCAC 2C .0113
9. YIELD (gpm): -- METHOD OF TEST --
10. WATER ZONES (depth): --
11. CHLORINATION: Type -- Amount --
12. CASING:

	Depth From	Depth To	Diameter	Wall Thickness or Weight/Ft.	Material
	0	14	2"	Sch 40	PVC

13. GROUT:

	Depth From	Depth To	Material	Method
	0	2	Portland	Pour
	2	13	Bentonite	Pour

14. SCREEN:

	Depth From	Depth To	Diameter	Slot Size	Material
	14	34	2" in.	.01 in.	SCH 40 PVC
			in.	in.	
			in.	in.	

15. SAND/GRAVEL PACK:

	Depth From	Depth To	Size	Material
	13	24	#2	sand

16. REMARKS: LES Job # P-342 Well ID # MW-5 Document #

DEPTH From	DEPTH To	DRILLING LOG Formation Description
0	12	red silt w/ varving clay content
12	18	red clay w/ some silt
18	30	brown-red, silt with little clay and trace fine to medium sand

If additional space is needed use back of form

LOCATION SKETCH
(Show direction and distance from at least two State Roads, or other map reference points)

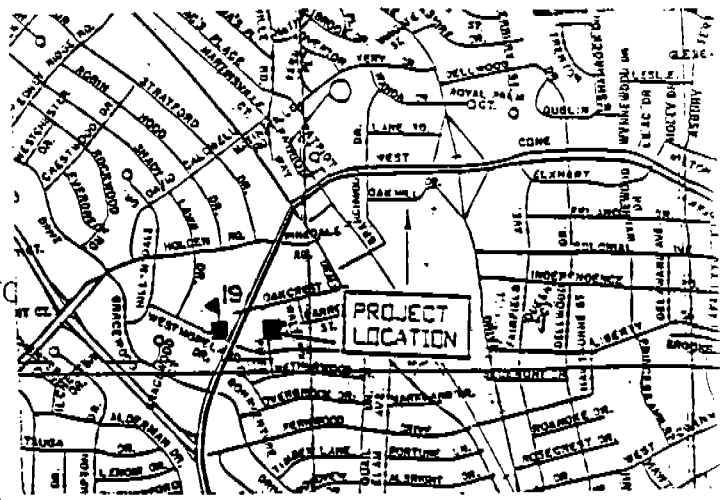

I DO HEREBY CERTIFY THAT THIS WELL WAS CONSTRUCTED IN ACCORDANCE WITH 15A NCAC 2C, WELL CONSTRUCTION STANDARDS, AND THAT A COPY OF THIS RECORD HAS BEEN PROVIDED TO THE WELL OWNER.

APPENDIX E

GROUNDWATER ANALYTICAL RESULTS

Water Technology and Controls, Inc.
Water Treatment Chemistries and Environmental Laboratory
Reidsville, North Carolina 27320
(910) 342-4748

April 7, 1994
Project: 2205 Oak Hill
Project Number: P-342
Semivolatile Organics by EPA 625

PARAMETER	MW-1
N-nitrosodimethylamine	<0.010 mg/L
Phenol	<0.010 mg/L
bis(2-Chloroethyl)ether	<0.010 mg/L
2-Chlorophenol	<0.010 mg/L
1,3-Dichlorobenzene	<0.010 mg/L
1,4-Dichlorobenzene	<0.010 mg/L
1,2-Dichlorobenzene	<0.010 mg/L
bis(2-chloroisopropyl)ether	<0.010 mg/L
Hexachloroethane	<0.010 mg/L
2-Methylphenol	<0.010 mg/L
4-Methylphenol	<0.010 mg/L
n-Nitroso-di-n-propylamine	<0.010 mg/L
Nitrobenzene	<0.010 mg/L
Isophorone	<0.010 mg/L
2-Nitrophenol	<0.010 mg/L
2,4-Dimethylphenol	<0.010 mg/L
bis(2-Chloroethoxy)methane	<0.010 mg/L
2,4-Dichlorophenol	<0.010 mg/L
1,2,4-Trichlorobenzene	<0.010 mg/L
Naphthalene	0.015 mg/L
Hexachlorobutadiene	<0.010 mg/L
4-Chloro-3-methylphenol	<0.010 mg/L
Hexachlorocyclopentadiene	<0.025 mg/L
2,4,6-Trichlorophenol	<0.010 mg/L
2-Chloronaphthalene	<0.010 mg/L
Dimethylphthalate	<0.010 mg/L
Acenaphthylene	<0.010 mg/L
1,2-Diphenylhydrazine	<0.010 mg/L
2,6-Dinitrotoluene	<0.010 mg/L
Acenaphthene	<0.010 mg/L
2,4-Dinitrophenol	<0.025 mg/L
4-Nitrophenol	<0.010 mg/L
2,4-Dinitrotoluene	<0.010 mg/L
Fluorene	<0.010 mg/L
Diethylphthalate	<0.010 mg/L
4-Chlorophenyl-phenylether	<0.010 mg/L
4,6-Dinitro-2-methylphenol	<0.010 mg/L
n-Nitrosodiphenylamine	<0.010 mg/L
4-Bromophenyl-phenylether	<0.010 mg/L
Hexachlorobenzene	<0.010 mg/L
Pentachlorophenol	<0.010 mg/L
Phenanthrene	<0.010 mg/L
Anthracene	<0.010 mg/L
Di-n-butylphthalate	<0.010 mg/L
Fluoranthene	<0.010 mg/L
Pyrene	<0.010 mg/L
Benzidine	<0.010 mg/L
Butylbenzylphthalate	<0.010 mg/L
Benzo[a]anthracene	<0.010 mg/L
3,3'-Dichlorobenzidine	<0.010 mg/L
Chyrsene	<0.010 mg/L
bis(2-Ethylhexyl)phthalate	<0.010 mg/L
Di-n-octylphthalate	<0.010 mg/L
Benzo[b]fluoranthene	<0.010 mg/L
Benzo[k]fluoranthene	<0.010 mg/L
Benzo[a]pyrene	<0.010 mg/L
Dibenz[a,h]anthracene	<0.010 mg/L
Benzo[g,h,i]perylene	<0.010 mg/L
Indeno[1,2,3-cd]pyrene	<0.010 mg/L

Tentative Identification of 10 Most Significant Peaks in Semi-Volatile fraction of MW-1:

Compound (Library Search)	Estimated Conc.
1,2,4-Trimethylbenzene	0.024 mg/L
(E)-1-Phenyl-1-butene	0.011 mg/L
1-Methylnaphthalene	0.017 mg/L
1,5-Dimethylnaphthalene	0.027 mg/L
2,3-dimethylnaphthalene	0.034 mg/L
1,7-Dimethylnaphthalene	0.02 mg/L
2-Methylnaphthalene	0.06 mg/L

EPA 602 by GC/MS

PARAMETER	MW-1
Benzene	< 5 ug/L
Toluene	< 5 ug/L
Chlorobenzene	< 5 ug/L
Ethylbenzene	< 5 ug/L
m,p-Xylene	0.007 ug/L
o-Xylene	0.010 ug/L
1,3-Dichlorobenzene	< 5 ug/L
1,4-Dichlorobenzene	< 5 ug/L
1,2-Dichlorobenzene	< 5 ug/L

Metals	MW-1
Lead by EPA 3030c	< 0.050 mg/L

WT&C Sample ID: 03219401

LEGACY ENVIRONMENTAL SERVICES, INC.

P.O. Box 4560, Greensboro, NC 27404-4560, Phone (919) 316-0452, FAX (919) 299-1961

CHAIN OF CUSTODY RECORD

FACILITY: 2205 Oak Hill

LES JOB #: P-342

SAMPLERS (Signature) [illegible] (Name) Steve Newton

SAMPLE NUMBER	SAMPLE LOCATION	DATE	TIME	SAMPLE TYPE WATER COMP	SAMPLE TYPE WATER GRAB	SAMPLE TYPE SOIL	NO. OF CONT.	ANALYSIS REQUIRED
MW1	Monitoring well #1	3/13	3:00		X		4	602 - [illegible]
								[illegible]
								[illegible]
								[illegible]

Relinquished by: (Signature)	Received by: (Signature)	Date/Time
Relinquished by: (Signature)	Received by: (Signature)	Date/Time
Relinquished by: (Signature)	Received by: (Signature)	Date/Time
Methods of Shipment	Received for Laboratory by: Jenna Dingler	Date/Time 3/18/94 5:00PM
Conditions upon receipt	Remarks:	

COMPANY NAME: Legacy Environmental
COMPANY PROJECT NUMBER: #YARBORO PROPERTY/P-342A

HYDROLOGIC PROJECT NUMBER: FL952623
HYDROLOGIC SAMPLE NUMBER: 952623
HYDROLOGIC LAB I.D.#: 399
SAMPLE IDENTIFICATION: MW-2
DATE SAMPLED: 2/1/95
DATE EXTRACTED: 2/6/95
DATE/TIME ANALYZED: 2/11/95

METHOD EPA 625

ANALYSIS	CAS NO.	SDL (ug/l)	RESULT (ug/l)
Phenol	108-95-2	5.0	BDL
bis(2-Chloroethyl)ether	111-44-4	5.0	BDL
2-Chlorophenol	95-57-8	5.0	BDL
1,3-Dichlorobenzene	541-73-1	5.0	BDL
1,4-Dichlorobenzene	106-46-7	5.0	BDL
1,2-Dichlorobenzene	95-50-1	5.0	BDL
bis(2-Chloroisopropyl)ether	39638-32-9	5.0	BDL
N-Nitroso-di-n-propylamine	621-64-7	5.0	BDL
Hexachloroethane	67-72-1	5.0	BDL
Nitrobenzene	98-95-3	5.0	BDL
Isophorone	78-59-1	5.0	BDL
2-Nitrophenol	88-75-5	5.0	BDL
2,4-Dimethylphenol	105-67-9	5.0	BDL
bis(2-Chloroethoxy)methane	111-91-1	5.0	BDL
2,4-Dichlorophenol	120-83-2	5.0	BDL
1,2,4-Trichlorobenzene	120-82-1	5.0	BDL
Naphthalene	91-20-3	5.0	BDL
Hexachlorobutadiene	87-68-3	5.0	BDL
4-Chloro-3-methylphenol	59-50-7	5.0	BDL
2,4,6-Trichlorophenol	88-06-2	5.0	BDL
2-Chloronaphthalene	91-58-7	5.0	BDL
Dimethylphthalate	131-11-3	5.0	BDL
Acenaphthylene	208-96-8	5.0	BDL
Acenaphthene	83-32-9	5.0	BDL
2,4-Dinitrophenol	51-28-5	25.0	BDL

COMPANY NAME: Legacy Environmental
COMPANY PROJECT NUMBER: #YARBORO PROPERTY/P-342A

HYDROLOGIC PROJECT NUMBER: FL952623
HYDROLOGIC SAMPLE NUMBER: 952623
SAMPLE IDENTIFICATION: MW-2
DATE SAMPLED: 2/1/95

METHOD EPA 625

ANALYSIS	CAS NO.	SDL (ug/l)	RESULT (ug/l)
4-Nitrophenol	100-02-7	25.0	BDL
2,4-Dinitrotoluene	121-14-2	5.0	BDL
2,6-Dinitrotoluene	606-20-2	5.0	BDL
Diethylphthalate	84-66-2	5.0	BDL
4-Chlorophenyl-phenylether	7005-72-3	5.0	BDL
Fluorene	86-73-7	5.0	BDL
4,6-Dinitro-2-methylphenol	534-52-1	25.0	BDL
4-Bromophenyl-phenylether	101-55-3	5.0	BDL
Hexachlorobenzene	118-74-1	5.0	BDL
Pentachlorophenol	87-86-5	25.0	BDL
Phenanthrene	85-01-8	5.0	BDL
Anthracene	120-12-7	5.0	BDL
Di-n-butylphthalate	84-74-2	5.0	BDL
Fluoranthene	206-44-0	5.0	BDL
Pyrene	129-00-0	5.0	BDL
Butylbenzylphthalate	85-68-7	5.0	BDL
3,3'-Dichlorobenzidine	91-94-1	10.0	BDL
Benzo(a)anthracene	56-55-3	5.0	BDL
bis(2-Ethylhexyl)phthalate	117-81-7	5.0	BDL
Chrysene	218-01-9	5.0	BDL
Di-n-octylphthalate	117-84-0	5.0	BDL
Benzo(b)fluoranthene	205-99-2	5.0	BDL
Benzo(k)fluoranthene	207-08-9	5.0	BDL
Benzo(a)pyrene	50-32-8	5.0	BDL

COMPANY NAME: Legacy Environmental
COMPANY PROJECT NUMBER: #YARBORO PROPERTY/P-342A

HYDROLOGIC PROJECT NUMBER: FL952623
HYDROLOGIC SAMPLE NUMBER: 952623
SAMPLE IDENTIFICATION: MW-2
DATE SAMPLED: 2/1/95

METHOD EPA 625

ANALYSIS	CAS NO.	SDL (ug/l)	RESULT (ug/l)
Indeno(1,2,3-cd)pyrene	193-39-5	5.0	BDL
Dibenz(a,h)anthracene	53-70-3	5.0	BDL
Benzo(g,h,i)perylene	191-24-2	5.0	BDL
Hexachlorocyclopentadiene	77-47-4	10.0	BDL
N-Nitrosodiphenylamine	86-30-6	10.0	BDL
Benzidine	92-87-5	80.0	BDL
N-Nitrosodimethylamine	62-75-9	10.0	BDL

BDL = Below Sample Detection Limit
SDL = Sample Detection Limit

COMMENTS: _____

COMPANY NAME: Legacy Environmental
COMPANY PROJECT NUMBER: #YARBORO PROPERTY/P-342A

HYDROLOGIC PROJECT NUMBER: FL952623
HYDROLOGIC SAMPLE NUMBER: 952623
HYDROLOGIC LAB I.D.#: 399
SAMPLE IDENTIFICATION: MW-2
DATE SAMPLED: 2/1/95
DATE EXTRACTED: 2/6/95
DATE/TIME ANALYZED: 2/11/95

TENTATIVELY IDENTIFIED COMPOUNDS
(water samples)

COMPOUND NAME	SDL (ug/l)	ESTIMATED CONCENTRATION (ug/l)
NO COMPOUNDS IDENTIFIED	10.0	BDL

BDL = Below Sample Detection Limit
SDL = Sample Detection Limit

COMMENTS: _____

COMPANY NAME: Legacy Environmental
COMPANY PROJECT NUMBER: #YARBORO PROPERTY/P-342A

HYDROLOGIC PROJECT NUMBER: FL952623
HYDROLOGIC SAMPLE NUMBER: 952623
HYDROLOGIC LAB I.D.#: 399
SAMPLE IDENTIFICATION: MW-2
DATE SAMPLED: 2/1/95
DATE EXTRACTED: N/A
DATE/TIME ANALYZED: 2/6/95

METHOD EPA 602

ANALYSIS	CAS NO.	SDL (ug/l)	RESULT (ug/l)
Benzene	71-43-2	1.0	BDL
Chlorobenzene	108-90-7	1.0	BDL
1,2-Dichlorobenzene	95-50-1	1.0	BDL
1,3-Dichlorobenzene	541-73-1	1.0	BDL
1,4-Dichlorobenzene	106-46-7	1.0	BDL
Ethylbenzene	100-41-4	1.0	BDL
Toluene	108-88-3	1.0	BDL
Xylene (Total)	1330-20-7	1.0	BDL
Surrogate Recovery:			
BFB			114%

BDL = Below Sample Detection Limit
SDL = Sample Detection Limit

COMMENTS: _____

COMPANY NAME: Legacy Environmental
COMPANY PROJECT NUMBER: #YARBORO PROPERTY/P-342A

HYDROLOGIC PROJECT NUMBER: FL952623
HYDROLOGIC SAMPLE NUMBER: 952624
HYDROLOGIC LAB I.D.#: 399
SAMPLE IDENTIFICATION: MW-3
DATE SAMPLED: 2/1/95
DATE EXTRACTED: 2/6/95
DATE/TIME ANALYZED: 2/11/95

METHOD EPA 625

ANALYSIS	CAS NO.	SDL (ug/l)	RESULT (ug/l)
Phenol	108-95-2	5.0	BDL
bis(2-Chloroethyl)ether	111-44-4	5.0	BDL
2-Chlorophenol	95-57-8	5.0	BDL
1,3-Dichlorobenzene	541-73-1	5.0	BDL
1,4-Dichlorobenzene	106-46-7	5.0	BDL
1,2-Dichlorobenzene	95-50-1	5.0	BDL
bis(2-Chloroisopropyl)ether	39638-32-9	5.0	BDL
N-Nitroso-di-n-propylamine	621-64-7	5.0	BDL
Hexachloroethane	67-72-1	5.0	BDL
Nitrobenzene	98-95-3	5.0	BDL
Isophorone	78-59-1	5.0	BDL
2-Nitrophenol	88-75-5	5.0	BDL
2,4-Dimethylphenol	105-67-9	5.0	BDL
bis(2-Chloroethoxy)methane	111-91-1	5.0	BDL
2,4-Dichlorophenol	120-83-2	5.0	BDL
1,2,4-Trichlorobenzene	120-82-1	5.0	BDL
Naphthalene	91-20-3	5.0	BDL
Hexachlorobutadiene	87-68-3	5.0	BDL
4-Chloro-3-methylphenol	59-50-7	5.0	BDL
2,4,6-Trichlorophenol	88-06-2	5.0	BDL
2-Chloronaphthalene	91-58-7	5.0	BDL
Dimethylphthalate	131-11-3	5.0	BDL
Acenaphthylene	208-96-8	5.0	BDL
Acenaphthene	83-32-9	5.0	BDL
2,4-Dinitrophenol	51-28-5	25.0	BDL

COMPANY NAME: Legacy Environmental
COMPANY PROJECT NUMBER: #YARBORO PROPERTY/P-342A

HYDROLOGIC PROJECT NUMBER: FL952623
HYDROLOGIC SAMPLE NUMBER: 952624
SAMPLE IDENTIFICATION: MW-3
DATE SAMPLED: 2/1/95

METHOD EPA 625

ANALYSIS	CAS NO.	SDL (ug/l)	RESULT (ug/l)
4-Nitrophenol	100-02-7	25.0	BDL
2,4-Dinitrotoluene	121-14-2	5.0	BDL
2,6-Dinitrotoluene	606-20-2	5.0	BDL
Diethylphthalate	84-66-2	5.0	BDL
4-Chlorophenyl-phenylether	7005-72-3	5.0	BDL
Fluorene	86-73-7	5.0	BDL
4,6-Dinitro-2-methylphenol	534-52-1	25.0	BDL
4-Bromophenyl-phenylether	101-55-3	5.0	BDL
Hexachlorobenzene	118-74-1	5.0	BDL
Pentachlorophenol	87-86-5	25.0	BDL
Phenanthrene	85-01-8	5.0	BDL
Anthracene	120-12-7	5.0	BDL
Di-n-butylphthalate	84-74-2	5.0	BDL
Fluoranthene	206-44-0	5.0	BDL
Pyrene	129-00-0	5.0	BDL
Butylbenzylphthalate	85-68-7	5.0	BDL
3,3'-Dichlorobenzidine	91-94-1	10.0	BDL
Benzo(a)anthracene	56-55-3	5.0	BDL
bis(2-Ethylhexyl)phthalate	117-81-7	5.0	BDL
Chrysene	218-01-9	5.0	BDL
Di-n-octylphthalate	117-84-0	5.0	BDL
Benzo(b)fluoranthene	205-99-2	5.0	BDL
Benzo(k)fluoranthene	207-08-9	5.0	BDL
Benzo(a)pyrene	50-32-8	5.0	BDL

COMPANY NAME: Legacy Environmental
COMPANY PROJECT NUMBER: #YARBORO PROPERTY/P-342A

HYDROLOGIC PROJECT NUMBER: FL952623
HYDROLOGIC SAMPLE NUMBER: 952624
SAMPLE IDENTIFICATION: MW-3
DATE SAMPLED: 2/1/95

METHOD EPA 625

ANALYSIS	CAS NO.	SDL (ug/l)	RESULT (ug/l)
Indeno(1,2,3-cd)pyrene	193-39-5	5.0	BDL
Dibenz(a,h)anthracene	53-70-3	5.0	BDL
Benzo(g,h,i)perylene	191-24-2	5.0	BDL
Hexachlorocyclopentadiene	77-47-4	10.0	BDL
N-Nitrosodiphenylamine	86-30-6	10.0	BDL
Benzidine	92-87-5	80.0	BDL
N-Nitrosodimethylamine	62-75-9	10.0	BDL

BDL = Below Sample Detection Limit
SDL = Sample Detection Limit

COMMENTS: _____

COMPANY NAME: Legacy Environmental
COMPANY PROJECT NUMBER: #YARBORO PROPERTY/P-342A

HYDROLOGIC PROJECT NUMBER: FL952623
HYDROLOGIC SAMPLE NUMBER: 952624
HYDROLOGIC LAB I.D.#: 399
SAMPLE IDENTIFICATION: MW-3
DATE SAMPLED: 2/1/95
DATE EXTRACTED: 2/6/95
DATE/TIME ANALYZED: 2/11/95

TENTATIVELY IDENTIFIED COMPOUNDS
(water samples)

COMPOUND NAME	SDL (ug/l)	ESTIMATED CONCENTRATION (ug/l)
NO COMPOUNDS IDENTIFIED	10.0	BDL

BDL = Below Sample Detection Limit
SDL = Sample Detection Limit

COMMENTS: _____

H Y D R O L O G I C , I N C .

COMPANY NAME: Legacy Environmental
COMPANY PROJECT NUMBER: #YARBORO PROPERTY/P-342A

HYDROLOGIC PROJECT NUMBER: FL952623
HYDROLOGIC SAMPLE NUMBER: 952624
HYDROLOGIC LAB I.D.#: 399
SAMPLE IDENTIFICATION: MW-3
DATE SAMPLED: 2/1/95
DATE EXTRACTED: N/A
DATE/TIME ANALYZED: 2/7/95

METHOD EPA 602

ANALYSIS	CAS NO.	SDL (ug/l)	RESULT (ug/l)
Benzene	71-43-2	1.0	BDL
Chlorobenzene	108-90-7	1.0	BDL
1,2-Dichlorobenzene	95-50-1	1.0	BDL
1,3-Dichlorobenzene	541-73-1	1.0	BDL
1,4-Dichlorobenzene	106-46-7	1.0	BDL
Ethylbenzene	100-41-4	1.0	BDL
Toluene	108-88-3	1.0	BDL
Xylene (Total)	1330-20-7	1.0	BDL
Surrogate Recovery:			
BFB			78%

BDL = Below Sample Detection Limit
SDL = Sample Detection Limit

COMMENTS: _____

1491 Twilight Trail ☐ Frankfort, KY 40601 ☐ 502/223-0251 ☐ FAX 502/875-8016 ☐ Toll Free 1-800/728-2251

COMPANY NAME: Legacy Environmental
COMPANY PROJECT NUMBER: #YARBORO PROPERTY/P-342A

HYDROLOGIC PROJECT NUMBER: FL952623
HYDROLOGIC SAMPLE NUMBER: 952625
HYDROLOGIC LAB I.D.#: 399
SAMPLE IDENTIFICATION: MW-4
DATE SAMPLED: 2/1/95
DATE EXTRACTED: 2/6/95
DATE/TIME ANALYZED: 2/11/95

METHOD EPA 625

ANALYSIS	CAS NO.	SDL (ug/l)	RESULT (ug/l)
Phenol	108-95-2	5.0	BDL
bis(2-Chloroethyl)ether	111-44-4	5.0	BDL
2-Chlorophenol	95-57-8	5.0	BDL
1,3-Dichlorobenzene	541-73-1	5.0	BDL
1,4-Dichlorobenzene	106-46-7	5.0	BDL
1,2-Dichlorobenzene	95-50-1	5.0	BDL
bis(2-Chloroisopropyl)ether	39638-32-9	5.0	BDL
N-Nitroso-di-n-propylamine	621-64-7	5.0	BDL
Hexachloroethane	67-72-1	5.0	BDL
Nitrobenzene	98-95-3	5.0	BDL
Isophorone	78-59-1	5.0	BDL
2-Nitrophenol	88-75-5	5.0	BDL
2,4-Dimethylphenol	105-67-9	5.0	BDL
bis(2-Chloroethoxy)methane	111-91-1	5.0	BDL
2,4-Dichlorophenol	120-83-2	5.0	BDL
1,2,4-Trichlorobenzene	120-82-1	5.0	BDL
Naphthalene	91-20-3	5.0	BDL
Hexachlorobutadiene	87-68-3	5.0	BDL
4-Chloro-3-methylphenol	59-50-7	5.0	BDL
2,4,6-Trichlorophenol	88-06-2	5.0	BDL
2-Chloronaphthalene	91-58-7	5.0	BDL
Dimethylphthalate	131-11-3	5.0	BDL
Acenaphthylene	208-96-8	5.0	BDL
Acenaphthene	83-32-9	5.0	BDL
2,4-Dinitrophenol	51-28-5	25.0	BDL

COMPANY NAME: Legacy Environmental
COMPANY PROJECT NUMBER: #YARBORO PROPERTY/P-342A

HYDROLOGIC PROJECT NUMBER: FL952623
HYDROLOGIC SAMPLE NUMBER: 952625
SAMPLE IDENTIFICATION: MW-4
DATE SAMPLED: 2/1/95

METHOD EPA 625

ANALYSIS	CAS NO.	SDL (ug/l)	RESULT (ug/l)
4-Nitrophenol	100-02-7	25.0	BDL
2,4-Dinitrotoluene	121-14-2	5.0	BDL
2,6-Dinitrotoluene	606-20-2	5.0	BDL
Diethylphthalate	84-66-2	5.0	BDL
4-Chlorophenyl-phenylether	7005-72-3	5.0	BDL
Fluorene	86-73-7	5.0	BDL
4,6-Dinitro-2-methylphenol	534-52-1	25.0	BDL
4-Bromophenyl-phenylether	101-55-3	5.0	BDL
Hexachlorobenzene	118-74-1	5.0	BDL
Pentachlorophenol	87-86-5	25.0	BDL
Phenanthrene	85-01-8	5.0	BDL
Anthracene	120-12-7	5.0	BDL
Di-n-butylphthalate	84-74-2	5.0	BDL
Fluoranthene	206-44-0	5.0	BDL
Pyrene	129-00-0	5.0	BDL
Butylbenzylphthalate	85-68-7	5.0	BDL
3,3'-Dichlorobenzidine	91-94-1	10.0	BDL
Benzo(a)anthracene	56-55-3	5.0	BDL
bis(2-Ethylhexyl)phthalate	117-81-7	5.0	BDL
Chrysene	218-01-9	5.0	BDL
Di-n-octylphthalate	117-84-0	5.0	BDL
Benzo(b)fluoranthene	205-99-2	5.0	BDL
Benzo(k)fluoranthene	207-08-9	5.0	BDL
Benzo(a)pyrene	50-32-8	5.0	BDL

COMPANY NAME: Legacy Environmental
COMPANY PROJECT NUMBER: #YARBORO PROPERTY/P-342A

HYDROLOGIC PROJECT NUMBER: FL952623
HYDROLOGIC SAMPLE NUMBER: 952625
SAMPLE IDENTIFICATION: MW-4
DATE SAMPLED: 2/1/95

METHOD EPA 625

ANALYSIS	CAS NO.	SDL (ug/l)	RESULT (ug/l)
Indeno(1,2,3-cd)pyrene	193-39-5	5.0	BDL
Dibenz(a,h)anthracene	53-70-3	5.0	BDL
Benzo(g,h,i)perylene	191-24-2	5.0	BDL
Hexachlorocyclopentadiene	77-47-4	10.0	BDL
N-Nitrosodiphenylamine	86-30-6	10.0	BDL
Benzidine	92-87-5	80.0	BDL
N-Nitrosodimethylamine	62-75-9	10.0	BDL

BDL = Below Sample Detection Limit
SDL = Sample Detection Limit

COMMENTS: _____

COMPANY NAME: Legacy Environmental
COMPANY PROJECT NUMBER: #YARBORO PROPERTY/P-342A

HYDROLOGIC PROJECT NUMBER: FL952623
HYDROLOGIC SAMPLE NUMBER: 952625
HYDROLOGIC LAB I.D.#: 399
SAMPLE IDENTIFICATION: MW-4
DATE SAMPLED: 2/1/95
DATE EXTRACTED: 2/6/95
DATE/TIME ANALYZED: 2/11/95

TENTATIVELY IDENTIFIED COMPOUNDS
(water samples)

COMPOUND NAME	SDL (ug/l)	ESTIMATED CONCENTRATION (ug/l)
NO COMPOUNDS IDENTIFIED	10.0	BDL

BDL = Below Sample Detection Limit
SDL = Sample Detection Limit

COMMENTS: _____

H Y D R O L O G I C , I N C .

COMPANY NAME: Legacy Environmental
COMPANY PROJECT NUMBER: #YARBORO PROPERTY/P-342A

HYDROLOGIC PROJECT NUMBER: FL952623
HYDROLOGIC SAMPLE NUMBER: 952625
HYDROLOGIC LAB I.D.#: 399
SAMPLE IDENTIFICATION: MW-4
DATE SAMPLED: 2/1/95
DATE EXTRACTED: N/A
DATE/TIME ANALYZED: 2/6/95

METHOD EPA 602

ANALYSIS	CAS NO.	SDL (ug/l)	RESULT (ug/l)
Benzene	71-43-2	1.0	BDL
Chlorobenzene	108-90-7	1.0	BDL
1,2-Dichlorobenzene	95-50-1	1.0	BDL
1,3-Dichlorobenzene	541-73-1	1.0	BDL
1,4-Dichlorobenzene	106-46-7	1.0	BDL
Ethylbenzene	100-41-4	1.0	BDL
Toluene	108-88-3	1.0	BDL
Xylene (Total)	1330-20-7	1.0	BDL
Surrogate Recovery:			
BFB			93%

BDL = Below Sample Detection Limit
SDL = Sample Detection Limit

COMMENTS: _____

1491 Twilight Trail ☐ Frankfort, KY 40601 ☐ 502/223-0251 ☐ FAX 502/875-8016 ☐ Toll Free 1-800/728-2251

COMPANY NAME:	Legacy Environmental
COMPANY PROJECT NUMBER:	#YARBORO PROPERTY/P-342A
HYDROLOGIC PROJECT NUMBER:	FL952623
HYDROLOGIC SAMPLE NUMBER:	952626
HYDROLOGIC LAB I.D.#:	399
SAMPLE IDENTIFICATION:	MW-5
DATE SAMPLED:	2/1/95
DATE EXTRACTED:	2/6/95
DATE/TIME ANALYZED:	2/11/95

METHOD EPA 625

ANALYSIS	CAS NO.	SDL (ug/l)	RESULT (ug/l)
Phenol	108-95-2	5.0	BDL
bis(2-Chloroethyl)ether	111-44-4	5.0	BDL
2-Chlorophenol	95-57-8	5.0	BDL
1,3-Dichlorobenzene	541-73-1	5.0	BDL
1,4-Dichlorobenzene	106-46-7	5.0	BDL
1,2-Dichlorobenzene	95-50-1	5.0	BDL
bis(2-Chloroisopropyl)ether	39638-32-9	5.0	BDL
N-Nitroso-di-n-propylamine	621-64-7	5.0	BDL
Hexachloroethane	67-72-1	5.0	BDL
Nitrobenzene	98-95-3	5.0	BDL
Isophorone	78-59-1	5.0	BDL
2-Nitrophenol	88-75-5	5.0	BDL
2,4-Dimethylphenol	105-67-9	5.0	BDL
bis(2-Chloroethoxy)methane	111-91-1	5.0	BDL
2,4-Dichlorophenol	120-83-2	5.0	BDL
1,2,4-Trichlorobenzene	120-82-1	5.0	BDL
Naphthalene	91-20-3	5.0	BDL
Hexachlorobutadiene	87-68-3	5.0	BDL
4-Chloro-3-methylphenol	59-50-7	5.0	BDL
2,4,6-Trichlorophenol	88-06-2	5.0	BDL
2-Chloronaphthalene	91-58-7	5.0	BDL
Dimethylphthalate	131-11-3	5.0	BDL
Acenaphthylene	208-96-8	5.0	BDL
Acenaphthene	83-32-9	5.0	BDL
2,4-Dinitrophenol	51-28-5	25.0	BDL

COMPANY NAME: Legacy Environmental
COMPANY PROJECT NUMBER: #YARBORO PROPERTY/P-342A

HYDROLOGIC PROJECT NUMBER: FL952623
HYDROLOGIC SAMPLE NUMBER: 952626
SAMPLE IDENTIFICATION: MW-5
DATE SAMPLED: 2/1/95

METHOD EPA 625

ANALYSIS	CAS NO.	SDL (ug/l)	RESULT (ug/l)
4-Nitrophenol	100-02-7	25.0	BDL
2,4-Dinitrotoluene	121-14-2	5.0	BDL
2,6-Dinitrotoluene	606-20-2	5.0	BDL
Diethylphthalate	84-66-2	5.0	BDL
4-Chlorophenyl-phenylether	7005-72-3	5.0	BDL
Fluorene	86-73-7	5.0	BDL
4,6-Dinitro-2-methylphenol	534-52-1	25.0	BDL
4-Bromophenyl-phenylether	101-55-3	5.0	BDL
Hexachlorobenzene	118-74-1	5.0	BDL
Pentachlorophenol	87-86-5	25.0	BDL
Phenanthrene	85-01-8	5.0	BDL
Anthracene	120-12-7	5.0	BDL
Di-n-butylphthalate	84-74-2	5.0	BDL
Fluoranthene	206-44-0	5.0	BDL
Pyrene	129-00-0	5.0	BDL
Butylbenzylphthalate	85-68-7	5.0	BDL
3,3'-Dichlorobenzidine	91-94-1	10.0	BDL
Benzo(a)anthracene	56-55-3	5.0	BDL
bis(2-Ethylhexyl)phthalate	117-81-7	5.0	BDL
Chrysene	218-01-9	5.0	BDL
Di-n-octylphthalate	117-84-0	5.0	BDL
Benzo(b)fluoranthene	205-99-2	5.0	BDL
Benzo(k)fluoranthene	207-08-9	5.0	BDL
Benzo(a)pyrene	50-32-8	5.0	BDL

COMPANY NAME: Legacy Environmental
COMPANY PROJECT NUMBER: #YARBORO PROPERTY/P-342A

HYDROLOGIC PROJECT NUMBER: FL952623
HYDROLOGIC SAMPLE NUMBER: 952626
SAMPLE IDENTIFICATION: MW-5
DATE SAMPLED: 2/1/95

METHOD EPA 625

ANALYSIS	CAS NO.	SDL (ug/l)	RESULT (ug/l)
Indeno(1,2,3-cd)pyrene	193-39-5	5.0	BDL
Dibenz(a,h)anthracene	53-70-3	5.0	BDL
Benzo(g,h,i)perylene	191-24-2	5.0	BDL
Hexachlorocyclopentadiene	77-47-4	10.0	BDL
N-Nitrosodiphenylamine	86-30-6	10.0	BDL
Benzidine	92-87-5	80.0	BDL
N-Nitrosodimethylamine	62-75-9	10.0	BDL

BDL = Below Sample Detection Limit
SDL = Sample Detection Limit

COMMENTS: _____

H Y D R O L O G I C , I N C .

COMPANY NAME: Legacy Environmental
COMPANY PROJECT NUMBER: #YARBORO PROPERTY/P-342A

HYDROLOGIC PROJECT NUMBER: FL952623
HYDROLOGIC SAMPLE NUMBER: 952626
HYDROLOGIC LAB I.D.#: 399
SAMPLE IDENTIFICATION: MW-5
DATE SAMPLED: 2/1/95
DATE EXTRACTED: 2/6/95
DATE/TIME ANALYZED: 2/11/95

TENTATIVELY IDENTIFIED COMPOUNDS
(water samples)

COMPOUND NAME	SDL (ug/l)	ESTIMATED CONCENTRATION (ug/l)
NO COMPOUNDS IDENTIFIED	10.0	BDL

BDL = Below Sample Detection Limit
SDL = Sample Detection Limit

COMMENTS: _____

1491 Twilight Trail ☐ Frankfort, KY 40601 ☐ 502/223-0251 ☐ FAX 502/875-8016 ☐ Toll Free 1-800/728-2251

H Y D R O L O G I C , I N C .

COMPANY NAME: Legacy Environmental
COMPANY PROJECT NUMBER: #YARBORO PROPERTY/P-342A

HYDROLOGIC PROJECT NUMBER: FL952623
HYDROLOGIC SAMPLE NUMBER: 952626
HYDROLOGIC LAB I.D.#: 399
SAMPLE IDENTIFICATION: MW-5
DATE SAMPLED: 2/1/95
DATE EXTRACTED: N/A
DATE/TIME ANALYZED: 2/6/95

METHOD EPA 602

ANALYSIS	CAS NO.	SDL (ug/l)	RESULT (ug/l)
Benzene	71-43-2	1.0	BDL
Chlorobenzene	108-90-7	1.0	BDL
1,2-Dichlorobenzene	95-50-1	1.0	BDL
1,3-Dichlorobenzene	541-73-1	1.0	BDL
1,4-Dichlorobenzene	106-46-7	1.0	BDL
Ethylbenzene	100-41-4	1.0	BDL
Toluene	108-88-3	1.0	BDL
Xylene (Total)	1330-20-7	1.0	BDL
Surrogate Recovery:			
BFB			90%

BDL = Below Sample Detection Limit
SDL = Sample Detection Limit

COMMENTS: _____

1491 Twilight Trail ☐ Frankfort, KY 40601 ☐ 502/223-0251 ☐ FAX 502/875-8016 ☐ Toll Free 1-800/728-2251

919 550 - 0649

LEGACY ENVIRONMENTAL SERVICES, INC.

P.O. Box 4560, Greensboro, NC 27404-4560, Phone (910) 316-0452, FAX (910) 299-1961

CHAIN OF CUSTODY RECORD

FACILITY: YARBORO PROPERTY

LES JOB#: P-342A

SAMPLERS (Signature) Tom Kigley (Tom Rigley)

SAMPLE NUMBER	SAMPLE LOCATION	DATE	TIME	SAMPLE TYPE WATER COMP	SAMPLE TYPE WATER GRAB	SAMPLE TYPE SOIL	NO. OF CONT.	ANALYSIS REQUIRED
MW-2	Monitor Well #2	2/1/95	2:35p		X		4	625 + 10 Ions
MW-3	#3		3:05p		X		4	Pests and
MW-4	#4		2:55p		X		4	602 + XV Ions
MW-5	#5		3:25p		X		4	" "

Relinquished by: (Signature)	Received by: (Signature)	Date/Time
2/1/95		
Relinquished by: (Signature)	Received by: (Signature)	Date/Time
Relinquished by: (Signature)	Received by: (Signature)	Date/Time
Methods of Shipment	Received for Laboratory by:	Date/Time

Conditions upon receipt	Remarks:

Water Technology And Controls, INC.
Water Treatment Chemistries & Environmental Laboratory
Reidsville, North Carolina 27320
(910) 342-4748

February 16, 1995
Project: Yarboro Property
Project Number: P-324D
Sample Collection Date: 2-9-95

Metals by EPA Method 3030C	MW-1	MW-2	MW-3	MW-4	MW-5
Lead (mg/L)	< 0.012	< 0.012	0.045	0.020	< 0.012

California TPH Method 3550	B1-8	B1-16	B2-8	B2-16	B3-8	B3-16	B4-8	B4-16
(mg/kg)	< 40.0	< 40.0	120	820	< 40.0	425	< 40.0	< 40.0

LEGACY ENVIRONMENTAL SERVICES, INC.

P.O. Box 4560, Greensboro, NC 27404-4560, Phone (910) 316-0452, FAX (910) 299-1961

CHAIN OF CUSTODY RECORD

FACILITY: Yarboro Property

LES JOB#: P-342D

SAMPLERS (Signature) [signature]

SAMPLE NUMBER	SAMPLE LOCATION	DATE	TIME	SAMPLE TYPE WATER COMP	SAMPLE TYPE WATER GRAB	SAMPLE TYPE SOIL	NO. OF CONT.	ANALYSIS REQUIRED
B1-8	Boring # 1, 8' deep	2/9/95	4:00p			X	1	EPA 3550
B1-16	" 1, 16' "		4:10p			X	1	
B2-8	" 2, 8' "		4:26p			X	1	
B2-16	" 2 16' "		4:36p			X	1	
B3-8	" 3 8' "		4:55p			X	1	
B3-16	" 3 16' "		5:05p			X	1	
B4-8	" 4 8' "		5:20p			X	1	
B4-16	" 4 16' "		5:31p			X	1	✓
MW-1	Monitor Well # 1		4:50p		X			Std. Method 3030C
MW-2	# 2		4:55p		X			
MW-3	# 3		5:00		X			
MW-4	# 4		5:05		X			
MW-5	# 5		5:10		X			✓

Relinquished by: (Signature)	Received by: (Signature)	Date/Time
[signature]		
Relinquished by: (Signature)	Received by: (Signature)	Date/Time
Relinquished by: (Signature)	Received by: (Signature)	Date/Time
Methods of Shipment	Received for Laboratory by:	Date/Time
Conditions upon receipt	Remarks:	

RESULTS:

F&R #:	9606010-04	9606010-05	9606010-06	
SAMPLE ID:	MW-4	MW-5	MW-6	
DATE/TIME:	05/31/96, 1155	05/31/96, 1245	05/31/96, 1230	
TYPE:	Water/Grab	Water/Grab	Water/Grab	
				Det'n Limit:
Purgeable Halocarbons/Aromatics (µg/L)				
Bromodichloromethane	BDL	BDL	BDL	1
Bromoform	BDL	BDL	BDL	1
Bromomethane	BDL	BDL	BDL	1
Carbon Tetrachloride	BDL	BDL	BDL	1
Chlorobenzene	BDL	BDL	BDL	1
Chloroethane	BDL	BDL	BDL	1
2-Chloroethyl vinyl ether	BDL	BDL	BDL	1
Chloroform	BDL	BDL	BDL	1
Chloromethane	BDL	BDL	BDL	1
Dibromochloromethane	BDL	BDL	BDL	1
1,2-Dichlorobenzene	BDL	BDL	BDL	1
1,3-Dichlorobenzene	BDL	BDL	BDL	1
1,4-Dichlorobenzene	BDL	BDL	BDL	1
Dichlorodifluoromethane	BDL	BDL	BDL	1
1,1-Dichloroethane	BDL	BDL	BDL	1
1,2-Dichloroethane	BDL	BDL	BDL	1
1,1-Dichloroethene	BDL	BDL	BDL	1
trans-1,2-Dichloroethene	BDL	BDL	BDL	1
1,2-Dichloropropane	BDL	BDL	BDL	1
cis 1,3-Dichloropropene	BDL	BDL	BDL	1
trans 1,3-Dichloropropene	BDL	BDL	BDL	1
Methylene chloride	BDL	BDL	BDL	1
1,1,2,2-Tetrachloroethane	BDL	BDL	BDL	1
Tetrachloroethene	BDL	BDL	BDL	1
1,1,1-Trichloroethane	BDL	BDL	BDL	1
1,1,2-Trichloroethane	BDL	BDL	BDL	1
Trichloroethene	BDL	BDL	BDL	1
Trichlorofluoromethane	BDL	BDL	BDL	1
Vinyl chloride	BDL	BDL	BDL	1
Benzene	BDL	BDL	BDL	1
Toluene	BDL	BDL	BDL	1
Ethylbenzene	BDL	BDL	BDL	1
Xylenes	BDL	BDL	BDL	3
MTBE	BDL	BDL	BDL	5
IPE	BDL	BDL	BDL	5
EDB	BDL	BDL	BDL	5

µg/L = microgram per Liter **BDL** = Below Detection Limit

RESULTS:

F&R #:	**9606010-04**	**9606010-05**	**9606010-06**	
SAMPLE ID:	**MW-4**	**MW-5**	**MW-6**	
DATE/TIME:	**05/31/96, 1155**	**05/31/96, 1245**	**05/31/96, 1230**	
TYPE:	**Water/Grab**	**Water/Grab**	**Water/Grab**	
				Det'n Limit:
Semi-Volatile Organic Compounds (µg/L)				
Acenaphthene	BDL	BDL	BDL	10
Acenaphthylene	BDL	BDL	BDL	10
Anthracene	BDL	BDL	BDL	10
Benzidine	BDL	BDL	BDL	10
Benzo[a]anthracene	BDL	BDL	BDL	10
Benzo[a]pyrene	BDL	BDL	BDL	10
Benzo[b]fluoranthene	BDL	BDL	BDL	10
Benzo[g,h,i]perylene	BDL	BDL	BDL	10
Benzo[k]fluoranthene	BDL	BDL	BDL	10
bis(2-Chloroethoxy)methane	BDL	BDL	BDL	10
bis(2-Chloroethyl)ether	BDL	BDL	BDL	10
bis(2-chloroisopropyl)ether	BDL	BDL	BDL	10
bis(2-Ethylhexyl)phthalate	BDL	BDL	BDL	10
4-Bromophenyl-phenylether	BDL	BDL	BDL	10
Butylbenzylphthalate	BDL	BDL	BDL	10
2-Chloronaphthalene	BDL	BDL	BDL	10
4-Chlorophenyl-phenylether	BDL	BDL	BDL	10
Chrysene	BDL	BDL	BDL	10
Dibenz[a,h]anthracene	BDL	BDL	BDL	10
1,2-Dichlorobenzene	BDL	BDL	BDL	10
1,3-Dichlorobenzene	BDL	BDL	BDL	10
1,4-Dichlorobenzene	BDL	BDL	BDL	10
3,3-Dichlorobenzidine	BDL	BDL	BDL	10
Diethylphthalate	BDL	BDL	BDL	10
Dimethylphthalate	BDL	BDL	BDL	10
Di-n-butylphthalate	BDL	BDL	BDL	10
2,4-Dinitrotoluene	BDL	BDL	BDL	10
2,6-Dinitrotoluene	BDL	BDL	BDL	10
Di-n-octylphthalate	BDL	BDL	BDL	10
Fluoranthene	BDL	BDL	BDL	10
Fluorene	BDL	BDL	BDL	10
Hexachlorobenzene	BDL	BDL	BDL	10
Hexachlorobutadiene	BDL	BDL	BDL	10
Hexachlorocyclopentadiene	BDL	BDL	BDL	10
Hexachloroethane	BDL	BDL	BDL	10
Indeno[1,2,3-cd]pyrene	BDL	BDL	BDL	10
Isophorone	BDL	BDL	BDL	10
Naphthalene	BDL	BDL	BDL	10
Nitrobenzene	BDL	BDL	BDL	10
n-Nitroso-di-n-propylamine	BDL	BDL	BDL	10
n-Nitrosodiphenylamine	BDL	BDL	BDL	10
Phenanthrene	BDL	BDL	BDL	10
Pyrene	BDL	BDL	BDL	10
1,2,4-Trichlorobenzene	BDL	BDL	BDL	10

µg/L = microgram per Liter BDL = Below Detection Limit

APPENDIX F

SLUG TEST DATA AND ANALYSES

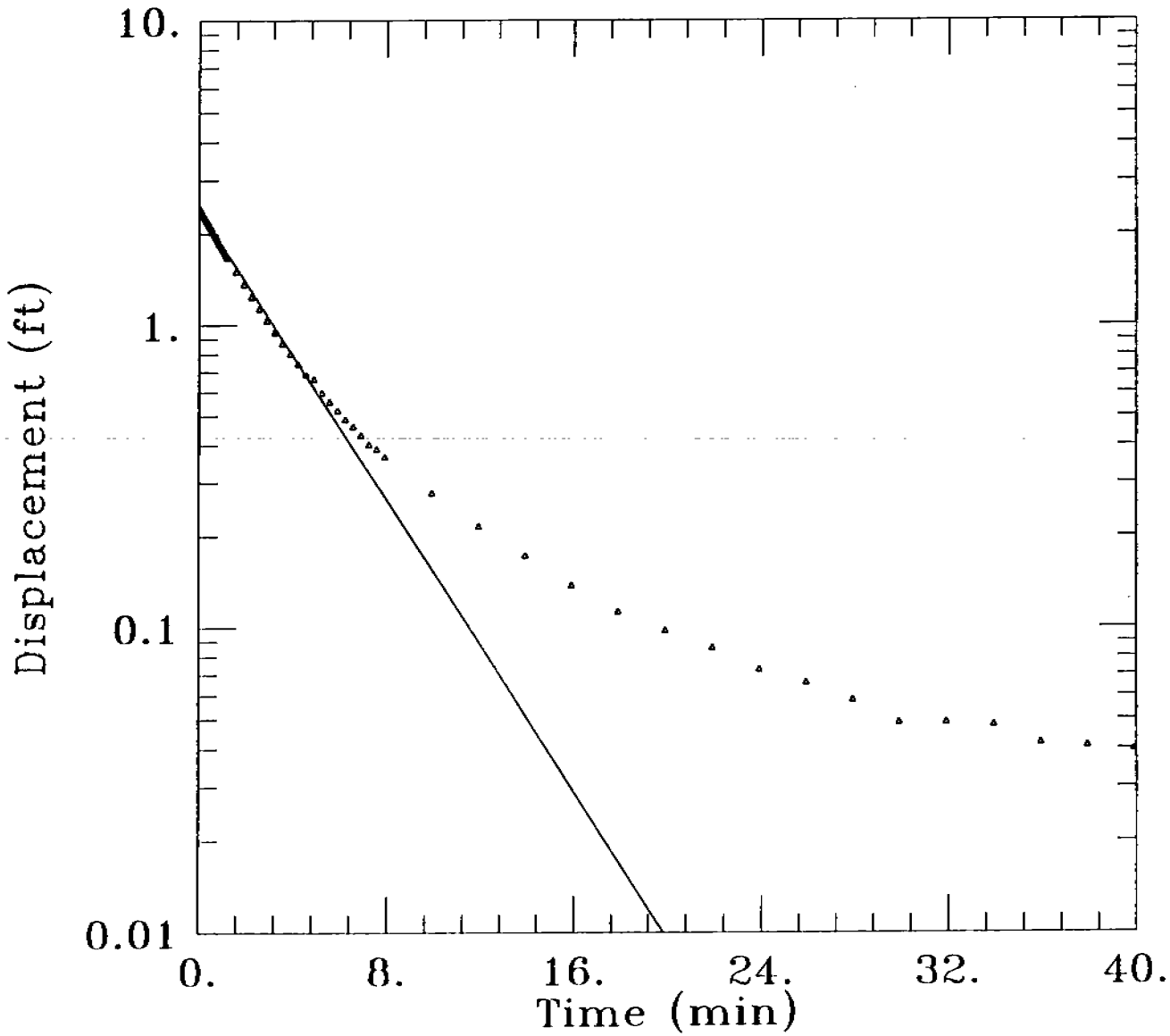

DATA SET:
YARB2.DAT
06/13/96

AQUIFER MODEL:
Unconfined

SOLUTION METHOD:
Bouwer-Rice

PROJECT DATA:
test date: AUGUST 18, 1995
test well: MW-4
obs. well: MW-4

TEST DATA:
H0 = 2.4 ft
rc = 0.08333 ft
rw = 0.25 ft
L = 10. ft
b = 25. ft
H = 16. ft

PARAMETER ESTIMATES:
K = 0.0002567 ft/min
y0 = 2.402 ft

AQTESOLV

residual = observed - calculated
weighted residual = residual * weight

Weighted Residual Statistics:

Number of residuals..... 109
Number of estimated parameters.... 2
Degrees of freedom..... 107
Residual mean..... 0.01291
Residual standard deviation..... 0.04486
Residual variance..... 0.002012

Model Residuals:

Time	Observed	Calculated	Residual	Weight
0.017	2.406	2.3906	0.015417	1
0.033	2.425	2.38	0.044959	1
0.05	2.414	2.3689	0.045108	1
0.067	2.405	2.3578	0.047205	1
0.083	2.391	2.3474	0.043601	1
0.1	2.382	2.3364	0.045598	1
0.117	2.365	2.3255	0.039542	1
0.133	2.344	2.3152	0.028797	1
0.15	2.338	2.3044	0.033642	1
0.167	2.325	2.2936	0.031437	1
0.183	2.313	2.2834	0.02955	1
0.2	2.305	2.2728	0.032247	1
0.217	2.293	2.2621	0.030893	1
0.233	2.278	2.2521	0.025868	1
0.25	2.269	2.2416	0.027418	1
0.267	2.257	2.2311	0.025919	1
0.283	2.241	2.2212	0.019756	1
0.3	2.232	2.2108	0.021162	1
0.317	2.217	2.2005	0.016518	1
0.333	2.208	2.1908	0.017221	1
0.35	2.201	2.1805	0.020484	1
0.367	2.186	2.1703	0.015698	1
0.383	2.177	2.1607	0.016268	1
0.4	2.163	2.1506	0.01239	1
0.417	2.155	2.1405	0.014464	1
0.433	2.141	2.1311	0.0099031	1
0.45	2.131	2.1211	0.0098861	1
0.467	2.112	2.1112	0.00082232	1
0.483	2.11	2.1019	0.0081315	1
0.5	2.102	2.092	0.0099776	1
0.517	2.083	2.0822	0.00077755	1
0.533	2.076	2.073	0.0029591	1
0.55	2.067	2.0633	0.0036701	1
0.567	2.051	2.0537	-0.0026643	1
0.583	2.042	2.0446	-0.0026087	1
0.6	2.031	2.035	-0.0040309	1
0.617	2.021	2.0255	-0.0044979	1
0.633	2.019	2.0166	0.0024335	1
0.65	2.004	2.0071	-0.00312	1
0.667	1.992	1.9977	-0.0057178	1
0.683	1.982	1.9889	-0.0069089	1
0.7	1.974	1.9796	-0.005592	1
0.717	1.966	1.9703	-0.0043187	1

0.733	1.948	1.9616	-0.013631	1
0.75	1.939	1.9524	-0.013441	1
0.767	1.929	1.9433	-0.014295	1
0.783	1.925	1.9347	-0.0097264	1
0.8	1.911	1.9257	-0.014663	1
0.817	1.898	1.9166	-0.018643	1
0.833	1.885	1.9082	-0.023191	1
0.85	1.867	1.8993	-0.032252	1
0.867	1.867	1.8904	-0.023356	1
0.883	1.857	1.882	-0.02502	1
0.9	1.848	1.8732	-0.025204	1
0.917	1.842	1.8644	-0.022429	1
0.933	1.83	1.8562	-0.026208	1
0.95	1.819	1.8475	-0.028512	1
0.967	1.81	1.8389	-0.028858	1
0.983	1.8	1.8307	-0.030749	1
1	1.791	1.8222	-0.031173	1
1.017	1.783	1.8136	-0.030638	1
1.033	1.773	1.8056	-0.03264	1
1.05	1.764	1.7972	-0.033182	1
1.067	1.754	1.7888	-0.034763	1
1.083	1.746	1.7809	-0.034876	1
1.1	1.737	1.7725	-0.035533	1
1.117	1.73	1.7642	-0.03423	1
1.133	1.723	1.7565	-0.033451	1
1.15	1.711	1.7482	-0.037223	1
1.167	1.703	1.74	-0.037033	1
1.183	1.693	1.7324	-0.03936	1
1.2	1.676	1.7242	-0.048245	1
1.217	1.678	1.7162	-0.038168	1
1.567	1.507	1.558	-0.051031	1
1.9	1.367	1.4211	-0.054123	1
2.233	1.243	1.2962	-0.053246	1
2.567	1.135	1.182	-0.047015	1
2.9	1.038	1.0781	-0.040148	1
3.233	0.95	0.98341	-0.033409	1
3.567	0.873	0.89675	-0.023747	1
3.9	0.807	0.81795	-0.010947	1
4.233	0.747	0.74607	0.00092773	1
4.567	0.689	0.68033	0.0086749	1
4.9	0.666	0.62054	0.045457	1
5.233	0.6	0.56601	0.033985	1
5.567	0.56	0.51613	0.043865	1
5.9	0.524	0.47078	0.053219	1
6.233	0.489	0.42941	0.059588	1
6.567	0.463	0.39157	0.071429	1
6.9	0.433	0.35716	0.075838	1
7.232	0.404	0.32587	0.078132	1
7.562	0.39	0.29748	0.092521	1
7.902	0.368	0.27081	0.097185	1
9.902	0.278	0.15587	0.12213	1
11.902	0.216	0.089714	0.12629	1
13.902	0.173	0.051636	0.12136	1
15.902	0.138	0.02972	0.10828	1
17.902	0.113	0.017106	0.095894	1
19.902	0.098	0.0098454	0.088155	1
21.902	0.086	0.0056667	0.080333	1
23.902	0.073	0.0032615	0.069738	1
25.902	0.066	0.0018772	0.064123	1
27.902	0.058	0.0010805	0.05692	1

29.902	0.049	0.00062187	0.048378	1
31.902	0.049	0.00035793	0.048642	1
33.902	0.048	0.00020601	0.047794	1
35.902	0.042	0.00011857	0.041881	1
37.902	0.041	6.8246E-005	0.040932	1
39.902	0.04	3.928E-005	0.039961	1

==

RESULTS FROM VISUAL CURVE MATCHING

VISUAL MATCH PARAMETER ESTIMATES

```
        Estimate
K  =    2.5669E-004 ft/min
y0 =    2.4018E+000 ft
```

<<<<<<<<<<<<<<<<<<<<<<<<<<<<<<<<<<<<<<<<<<<>>>