JM

Nightingale Geologic Consultants, P.C.
4722 Sharon Rd., Suite E-124
Charlotte, North Carolina 28210
Phone: 704-643-9700 Fax: 704-643-9701 Email: elliotj@ngc.charlotte.nc.us

November 11, 1996

RECEIVED
N.C. Dept. of EHNR
NOV 14 1996
Winston-Salem
Regional Office

Ms. Sherri V. Knight
NCDEHNR
Winston-Salem Regional Office
585 Waughtown Street
Winston-Salem, NC 27107

Subject: Quarterly Report and As-Built
Exxon RAS #4-3998, 4701 W. Market St.
Greensboro, NC
Groundwater Incident #10001, Rank 80/E

Dear Ms. Knight:

On behalf of Exxon Company, U.S.A. and Griffith Enterprises, Inc., Nightingale Geologic Consultants, P.C. is submitting the enclosed quarterly report for the above referenced site.

A soil vapor extraction and aquifer air sparge remediation system (SVE/AAS) was installed and became operational during the second calendar quarter of 1996. As-built drawings and schematics are also enclosed.

If you have any questions regarding this submittal, I can be contacted at the letterhead address or 704-643-9700. Frank Medlin of Exxon can be reached at 704-529-4263.

Sincerely,
Nightingale Geologic Consultants, P.C.

Elliot J. Nightingale, P.G.
Principal Geologist

NORTH CAROLINA LICENSED SEAL 1165 GEOLOGIST ELLIOT J. NIGHTINGALE

enclosure

c: Alan Griffith - Griffith Enterprises, Inc.
Frank Medlin - Exxon Company, U.S.A.

QUARTERLY REPORT

TABLE 1
GROUND WATER ELEVATION DATA
EXXON RETAIL LOCATION 4-3998
4701 WEST MARKET STREET
GREENSBORO, NORTH CAROLINA

	MW-1 96.50		MW-2 96.56		MW-3 96.92		MW-4 97.92	
DATE	DEPTH TO GROUND WATER	GROUND WATER ELEVATION	DEPTH TO GROUND WATER	GROUND WATER ELEVATION	DEPTH TO GROUND WATER	GROUND WATER ELEVATION	DEPTH TO GROUND WATER	GROUND WATER ELEVATION
8/20/92	23.45	73.05	22.99	73.57	24.49	72.43	24.50	73.42
3/25/93	18.77	77.73	18.90	77.66	20.91	76.01	22.62	75.30
6/11/93	19.23	77.27	18.85	77.71	20.74	76.18	21.36	76.56
4/13/94	19.79	76.71	19.06	77.50	21.60	75.32	22.74	75.18
6/9/94	21.97	74.53	21.40	75.16	23.24	73.68	23.26	74.66
6/14/95	22.65	73.85	22.70*	73.86	23.96*	72.96	24.28	73.64
9/18/95	23.73	72.77	24.06*	72.50	25.22*	71.70	24.82	73.10
12/6/95	22.20	74.30	21.70	74.86	23.60	73.32	24.26	73.66
12/14/95	22.10	74.40	21.62	74.94	23.44*	73.48	24.22	73.70
3/27/96	19.56	76.94	19.25	77.31	21.16	73.48	n/a	n/a
6/26/96	20.39	76.11	20.15	76.41	21.70	73.48	n/a	n/a

	MW-5 97.24		MW-6 96.15		MW-7 98.64		DW-8 98.00	
DATE	DEPTH TO GROUND WATER	GROUND WATER ELEVATION	DEPTH TO GROUND WATER	GROUND WATER ELEVATION	DEPTH TO GROUND WATER	GROUND WATER ELEVATION	DEPTH TO GROUND WATER	GROUND WATER ELEVATION
3/25/93	22.05	75.19	21.10	75.05	26.60	72.04	9.50	88.50
6/11/93	21.88	75.36	20.71	75.44	25.61	73.03	22.41	75.59
4/13/94	22.74	74.50	21.62	74.53	--	--	--	--
6/9/94	24.19	73.05	23.08	73.07	27.30	71.34	25.31	72.69
6/14/95	25.02	72.22	23.90	72.25	27.78	70.86	25.40	72.60
9/18/95	25.82	71.42	24.86	71.29	27.35	71.29	25.57	72.43
12/6/95	24.77	72.47	23.73	72.42	27.60	71.04	25.18	72.82
12/14/95	24.68	72.56	23.66	72.49	27.47	71.17	25.11	72.89
3/27/96	n/a	n/a	n/a	n/a	n/a	n/a	n/a	n/a
6/26/96	n/a	n/a	n/a	n/a	n/a	n/a	n/a	n/a

	MW-9 94.56		MW -Moore 98.10		0P-1 96.79	
DATE	DEPTH TO GROUND WATER	GROUND WATER ELEVATION	DEPTH TO GROUND WATER	GROUND WATER ELEVATION	DEPTH TO GROUND WATER	GROUND WATER ELEVATION
4/13/94	--	--	--	--	21.06	75.73
6/9/94	--	--	--	--	23.04	73.75
6/14/95	--	--	--	--	23.94	72.85
11/13/95	--	--	23.90	74.20	--	--
12/6/95	**20.64	73.92	23.12	74.98	--	--
12/14/95	19.19	75.37	--	--	--	--
3/27/96	n/a	n/a	--	--	--	--
6/26/96	n/a	n/a	--	--	--	--

TABLE 1
GROUND WATER ELEVATION DATA
EXXON RETAIL LOCATION 4-3998
4701 WEST MARKET STREET
GREENSBORO, NORTH CAROLINA

	AS-1 96.38		EP-1 96.31	
DATE	DEPTH TO GROUND WATER	GROUND WATER ELEVATION	DEPTH TO GROUND WATER	GROUND WATER ELEVATION
4/13/94	20.90	75.48	20.77	75.54
6/9/94	22.65	73.73	22.56	73.75
6/14/95	23.54	72.84	DRY	--

Notes:

Depth to ground water measured in feet below top of casing.

Elevations are relative to an on-site reference point which has been assigned an elevation of 100.00 feet.

"--" = Gauging data not available

* = Free product film detected in monitor well (<0.01 fe

** = Ground water not at static level

n/a = well not gauged

d:\exxqrs

TABLE 2
EPA METHOD 602 AND LEAD GROUND WATER ANALYTICAL RESULTS
EXXON RETAIL LOCATION 4-3998
4701 WEST MARKET STREET
GREENSBORO, NORTH CAROLINA

MONITOR WELL ID	DATE	EXPANDED EPA METHOD 602							METHOD 504.1	METHOD 3030C
		TOTAL BTEX	BENZENE	TOLUENE	ETHYL-BENZENE	XYLENES	MTBE	IPE	EDB	LEAD
MW-1	8/20/92	65900	5000	35000	3900	22000	<500	--	--	--
	3/25/93	44600	3500	21000	3100	17000	<250	--	--	--
	6/22/93	44600	4200	18000	3400	19000	<500	--	--	--
	6/9/94	62450	6150	22500	5000	28800	96	900	<10	5
	6/14/95	<1	<1	<1	<1	<1	<10	465	--	--
	9/18/95	50,500	4,000	24,000	3,000	19,500	<5,000	<5,000	--	--
	12/6/95	47,700	4,500	18,000	3,600	21,600	<225	1,230	--	--
	3/27/96	15,350	2,340	3,420	1,350	8,240	<450	945	<0.503	<3.0
	6/26/96	32,280	3,420	7,980	2,640	18,240	<200	1,030	<20	<3.0
MW-2	8/20/92	13900	1400	4900	1600	6000	<250	--	--	--
	3/25/93	16400	2000	7300	1200	5900	<250	--	--	--
	6/22/93	76800	8100	40000	4700	24000	<2500	--	--	--
	6/9/94	70520	7160	33500	4560	25300	390	280	<10	3
	6/14/95	234,900	14,000	112,000	17,100	91,800	<225	1,710	--	--
	9/18/95	56,000	4,500	25,000	4,000	22,500	<1,000	1,600	--	--
	12/6/95	5,553	788	2,900	315	1,550	<225	292	--	--
	3/27/96	136,800	22,000	72,000	7,200	35,600	<900	10,800	0.70	<3.0
	6/26/96	103,000	16,000	60,000	4,500	22,500	<10000	<10000	<1000	<3.0
MW-3	8/20/92	84800	11000	41000	4800	26000	<500	--	--	--
	3/25/93	67300	9700	35000	3600	19000	<1000	--	--	--
	6/22/93	88900	13000	50000	3900	22000	<2500	--	--	--
	6/9/94	114700	12600	65400	4500	32200	<1000	2580	<50	678
	6/14/95	308,200	25,200	157,000	18,000	108,000	<225	2,740	--	390
	9/18/95	125,000	15,000	73,000	6,000	31,000	<5,000	<5,000	--	372
	12/6/95	156,600	19,800	94,500	6,300	36,000	<4500	7,650	--	147
	3/27/96	158,400	23,400	80,100	8,100	46,800	<900	11,200	59	1,400
	6/26/96	106,750	14,300	49,000	5,650	37,800	<5000	7,300	<500	1,010
MW-4	8/20/92	4	<2.0	<2.0	<2.0	4	<10	--	--	--
	3/25/93	17.6	1.9	4.7	<1.0	11	<10	--	--	--
	6/22/93	17.5	1.5	<1.0	<1.0	16	<10	--	--	--
	6/9/94	<1.0	<1.0	<1.0	<1.0	<1.0	<10	<10	<1.0	4
	6/14/95	71	6	9	3	53	<10	<10	--	--
	9/18/95	33	4	<1.0	<1.0	29	<10	33	--	--

TABLE 2
EPA METHOD 602 AND LEAD GROUND WATER ANALYTICAL RESULTS
EXXON RETAIL LOCATION 4-3998
4701 WEST MARKET STREET
GREENSBORO, NORTH CAROLINA

MONITOR WELL ID	DATE	EXPANDED EPA METHOD 602							METHOD 504.1	METHOD 3030C
		TOTAL BTEX	BENZENE	TOLUENE	ETHYL-BENZENE	XYLENES	MTBE	IPE	EDB	LEAD
MW-5	3/25/93	<1.0	<1.0	<1.0	<1.0	<1.0	<10	--	--	--
	6/22/93	<1.0	<1.0	<1.0	<1.0	<1.0	<10	--	--	--
	6/9/94	<1.0	<1.0	<1.0	<1.0	<1.0	<10	<10	<1.0	13
	6/14/95	<1.0	<1.0	<1.0	<1.0	<1.0	<10	<10	--	--
	9/18/95	2	<1.0	1	<1.0	1	<10	27	--	--
MW-6	3/25/93	<1.0	<1.0	<1.0	<1.0	<1.0	<10	--	--	--
	6/22/93	<1.0	<1.0	<1.0	<1.0	<1.0	<10	--	--	--
	6/9/94	<1.0	<1.0	<1.0	<1.0	<1.0	<10	<10	<1.0	13
	6/14/95	<1.0	<1.0	<1.0	<1.0	<1.0	<10	<10	--	--
	9/18/95	<1.0	<1.0	<1.0	<1.0	<1.0	<10	14	--	--
MW-7	3/25/93	9.1	1.9	1.9	1.9	3.4	36.0	--	--	--
	6/22/93	<5.0	<5.0	<5.0	<5.0	<5.0	<50	--	--	--
	6/9/94	<1.0	<1.0	<1.0	<1.0	<1.0	<10	<10	<1.0	20
	6/14/95	<1.0	<1.0	<1.0	<1.0	<1.0	<10	<10	--	26
	9/18/95	2	<1.0	1	<1.0	1	10	16	--	15
DW-8	3/25/93	<1.0	<1.0	<1.0	<1.0	<1.0	<10	--	--	--
	6/22/93	<1.0	<1.0	<1.0	<1.0	<1.0	<10	--	--	--
	6/9/94	<1.0	<1.0	<1.0	<1.0	<1.0	<10	<10	<1.0	4
	6/14/95	2	<1	1	<1	1	<10	<10	--	--
	9/18/95	<1.0	<1.0	<1.0	<1.0	<1.0	<10	<10	--	--
MW-9	12/6/95	823	36	7	110	670	<10	38	--	--
MW-1A*	11/20/92	<1.0	<1.0	<1.0	<1.0	<1.0	--	--	--	--
(MW-Moore	11/13/95	<1.0	<1.0	<1.0	<1.0	<1.0	--	--	--	--
T15A NCAC 2L STANDARD			**1**	**1,000**	**29**	**530**	**200**	**NS**	**0.0004**	**15**

SVES SAMPLING

Date	Benzene (ppm)	Toluene (ppm)	Ethyl-benz (ppm)	Tot-Xylenes (ppm)	Total VOCs (TPH, ppm)	Air Velocity (fps)	Benzene (lbs/day)	VOCs (lbs/day)
6/12/96	*2.91*	*2.50*	*<0.5*	*1.07*	*44.50*	*38.26*	*0.03*	*0.52*

Results in micrograms per liter (ug/l)
MTBE = Methy tert-butyl ether
IPE = Isopropyl ether
EDB = Ethylene dibromide
"--" = not analyzed
* - Source: Groundwater Investigation - Bath and Kitchen Menagerie, Greensboro, North Carolina, 11-27-92, Pyramid Environmental,Inc.

TABLE 3
SYSTEM OPERATING SCHEDULE
EXXON RETAIL LOCATION 4-3998
4701 WEST MARKET STREET
GREENSBORO, NORTH CAROLINA

Date	Operation	SVE air vel. (f/m)	AAS press. psi	SVE vac. in H2O
4/29/96	system start-up	6059	9	30
5/25/96	shut system down; maint. on carbon drums			
6/14/96	system check	6090	5.5	25
6/20/96	installed carbon drums in parallel, relocated vacuum relief valve flow into carbon drums about 100 cfm each			
8/5/96	system check, hour meter 2135.11	10000+	7	25
8/26/96	system down, high level switch failed. Switch backordered			

REMEDIATION SYSTEM AS-BUILT INFORMATION

PID AND SYSTEM OPERATION / CONTROL DESCRIPTION

Exxon RAS 4-3998
4701 West Market Street
Greensboro, North Carolina
Soil Vapor Extraction/Active Air Sparge
Operation and Control Description

The SVE/AAS system will consist in general of vacuum blower B-01, inlet silencer and liquid separator T-01, discharge silencer T-02, carbon unit C-01, and air compressor AC-01.

Volatile organic vapors mixed with air will be drawn from the unsaturated soil through the horizontal extraction screen by B-01. The mixture and entrained water will pass through T-01 where the majority of the water is removed. Vacuum Relief valve VR-01 is provided to protect B-01 by allowing outside air to enter the system if the pre-set vacuum is exceeded. Level switch LSH-01 is provided in T-01 to shutdown the blower if water in the tank reaches a high level. In the event of a high water level LSH-01 will interrupt the power to time delay relay TDR-01 which in turn de-energizes the starter for B-01. The time delay setting for TDR-01 can be varied from 1 to 300 seconds to allow T-01 to drain by gravity. Solenoid valve SV-02 is provided on the T-01 discharge to allow the water to drain and is also actuated by TDR-01. Blower B-01 is controlled through hand-off-auto switch HS-01 in conjunction with time switch TS-01. While in the "auto mode" TS-01 will allow the blower to be cycled on and off as necessary for the site conditions. SV-02 will be controlled through hand-auto switch HS-02 in conjunction with TDR-01. This allows the valve to be opened manually when necessary for maintenance. The mixture passes through B-01 and T-02 to the vapor phase carbon canister C-01 (if necessary to meet emission requirements) prior to discharge to the atmosphere.

Air Compressor AC-01 provides air to the field sparge wells and is interlocked with B-01. AC-01 cannot be energized in the "Auto Mode" unless B-01 is energized first. Relief Valve VR-03 is provided on the discharge to protect AC-01 from over-pressure. Presure indicator PI-02 is provided to display the discharge pressure of AC-01 .

Solenoid valve SV-02 will be of the "normally closed" type and therefore must be energized in order to drain the water from T-01. In the event that SV-02 fails to open and allow the water to drain, the system is protected primarily by the level switch. Additional protection for the blower is provided by the thermal overload on the starter.

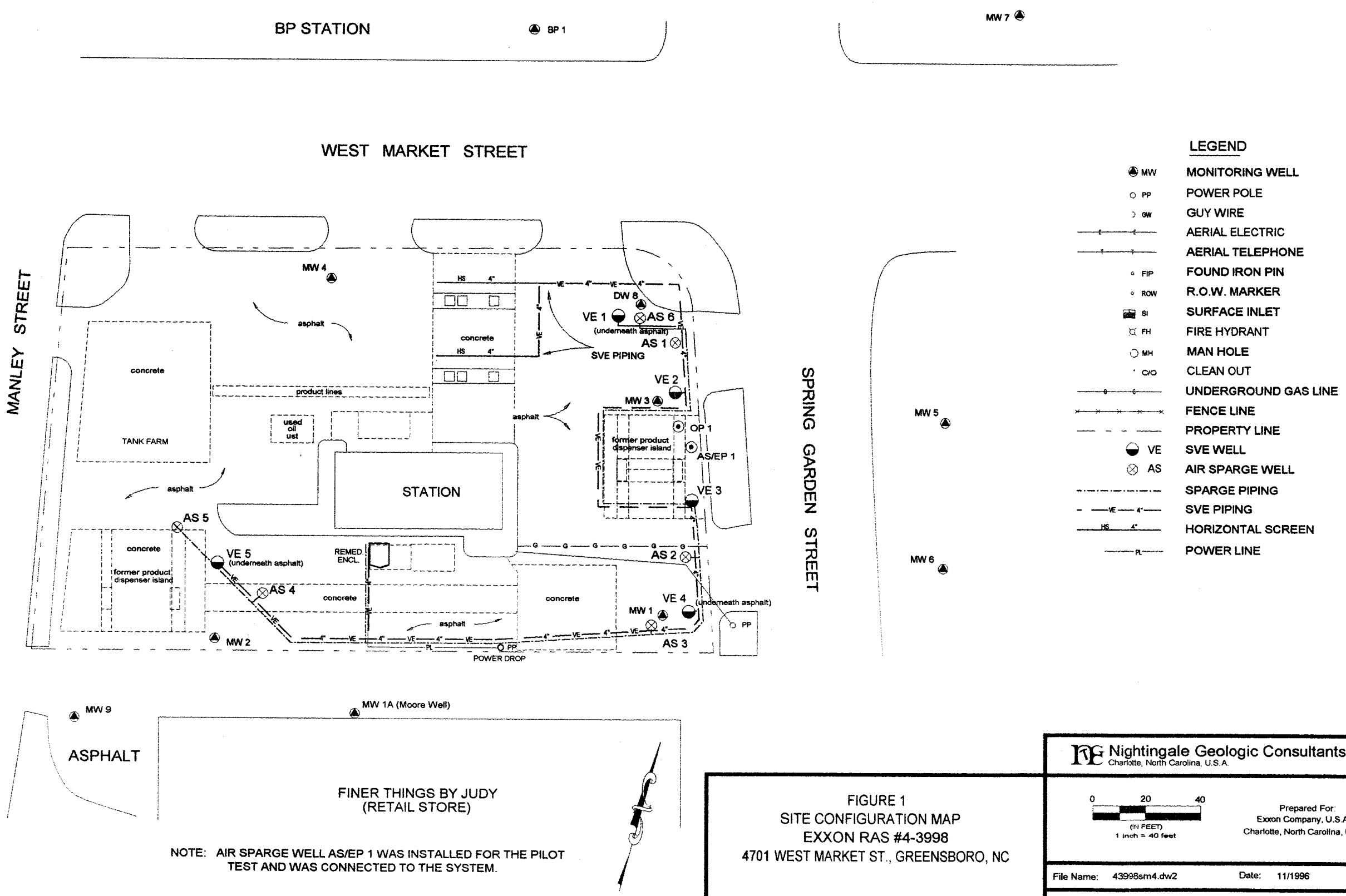

NOTE: AIR SPARGE WELL AS/EP 1 WAS INSTALLED FOR THE PILOT TEST AND WAS CONNECTED TO THE SYSTEM.

FIGURE 1
SITE CONFIGURATION MAP
EXXON RAS #4-3998
4701 WEST MARKET ST., GREENSBORO, NC

Reference map by EA Engineering, Science, and Technology

Nightingale Geologic Consultants, P.C.
Charlotte, North Carolina, U.S.A.

0 20 40
(IN FEET)
1 inch = 40 feet

Prepared For:
Exxon Company, U.S.A.
Charlotte, North Carolina, U.S.A.

File Name: 43998sm4.dw2 Date: 11/1996

Approved: Scale: 1 in. = 40 ft.

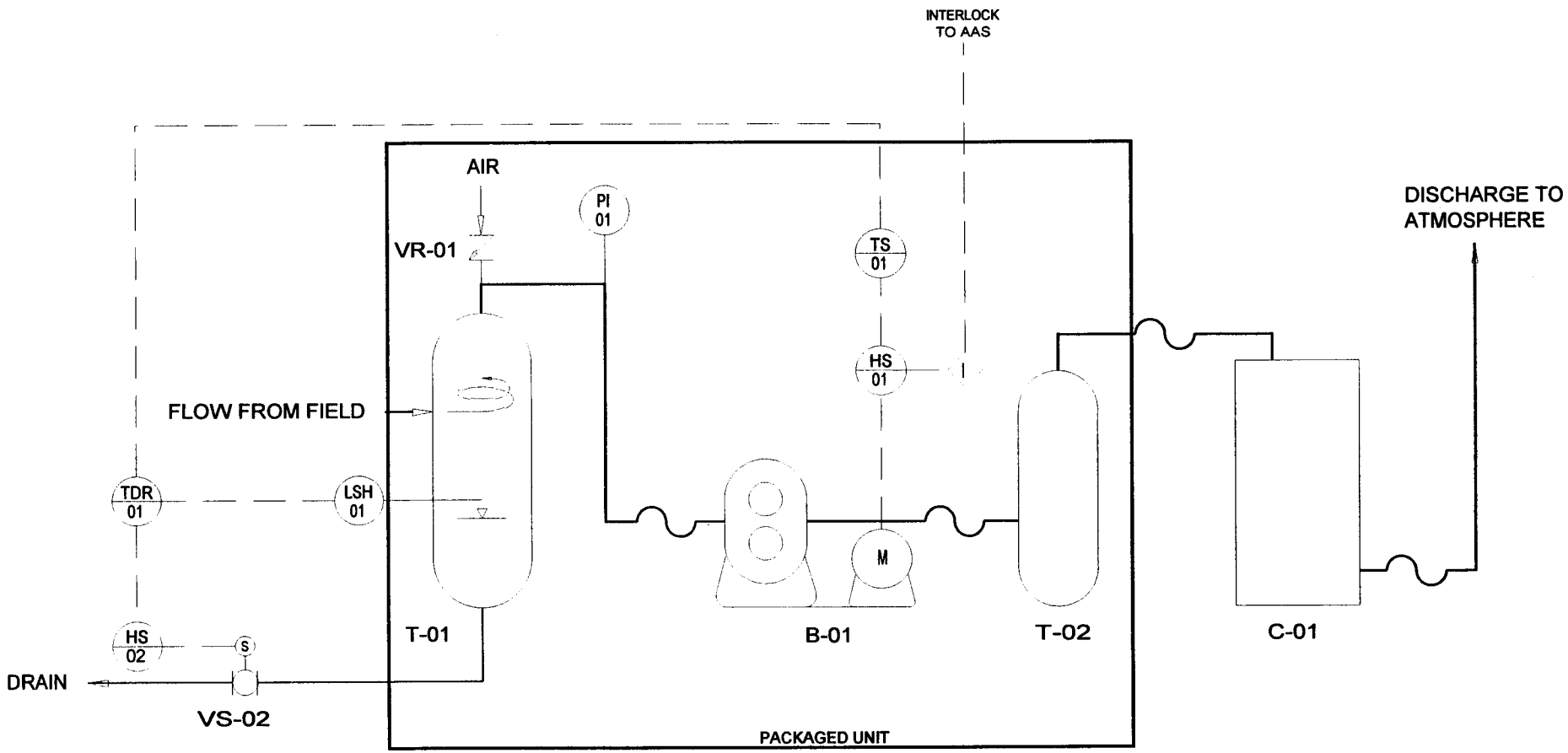

LAW ENGINEERING, INC.
WILMINGTON, NORTH CAROLINA

EXXON COMPANY, USA
LOCATION 4-3998
4701 WEST MARKET STREET
GREENSBORO, NORTH CAROLINA
SOIL VAPOR EXTRACTION / ACTIVE AIR SPARGE
PROCESS & INSTRUMENTATION DIAGRAM

DRAWN: D. HAGGETT	DATE: APRIL 2, 1995
DFT CHECK: DNH	SCALE: NONE
ENG CHECK: DNH	JOB: 673-11285-NT
APPROVAL:	FILE: 11285P1
REFERENCE:	DRAWING NO.: 2

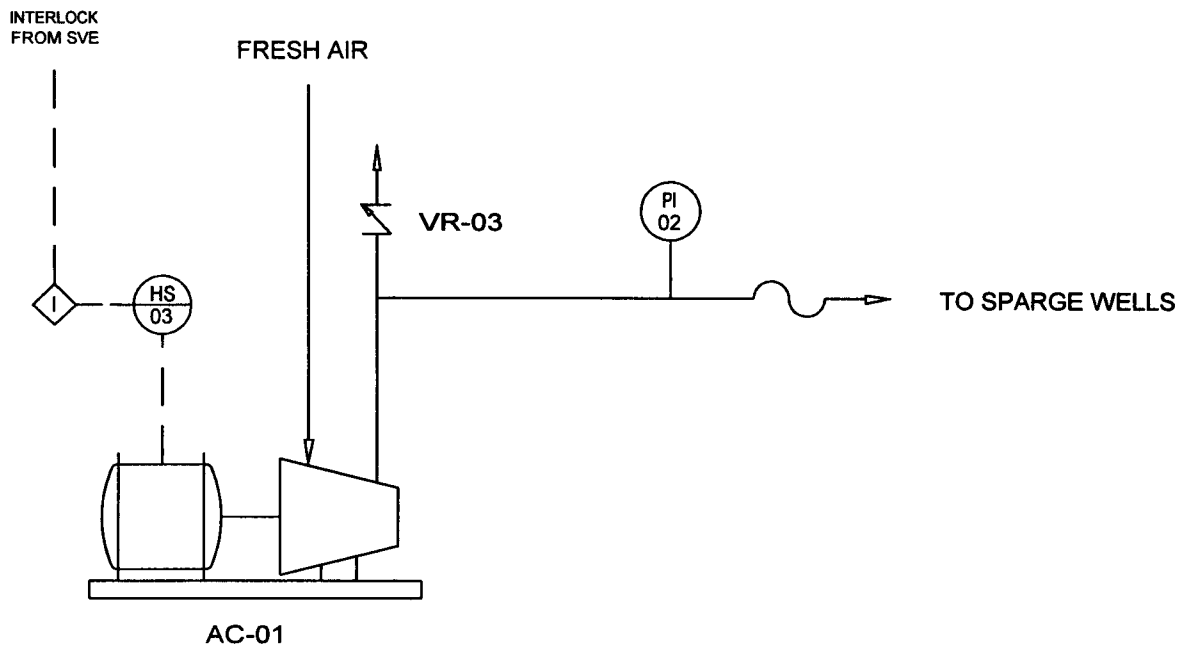

LAW ENGINEERING, INC.
WILMINGTON, NORTH CAROLINA

EXXON COMPANY, USA LOCATION 4-3998 4701 WEST MARKET STREET GREENSBORO, NORTH CAROLINA SOIL VAPOR EXTRACTION/ACTIVE AIR SPARGE PROCESS & INSTRUMENTATION DIAGRAM	DRAWN: D. HAGGETT	DATE: APRIL 2, 1995
	DFT CHECK: DNH	SCALE: NONE
	ENG CHECK: DNH	JOB: 673-11285-NT
	APPROVAL:	FILE: 11285P2
REFERENCE:		DRAWING NO.: 3

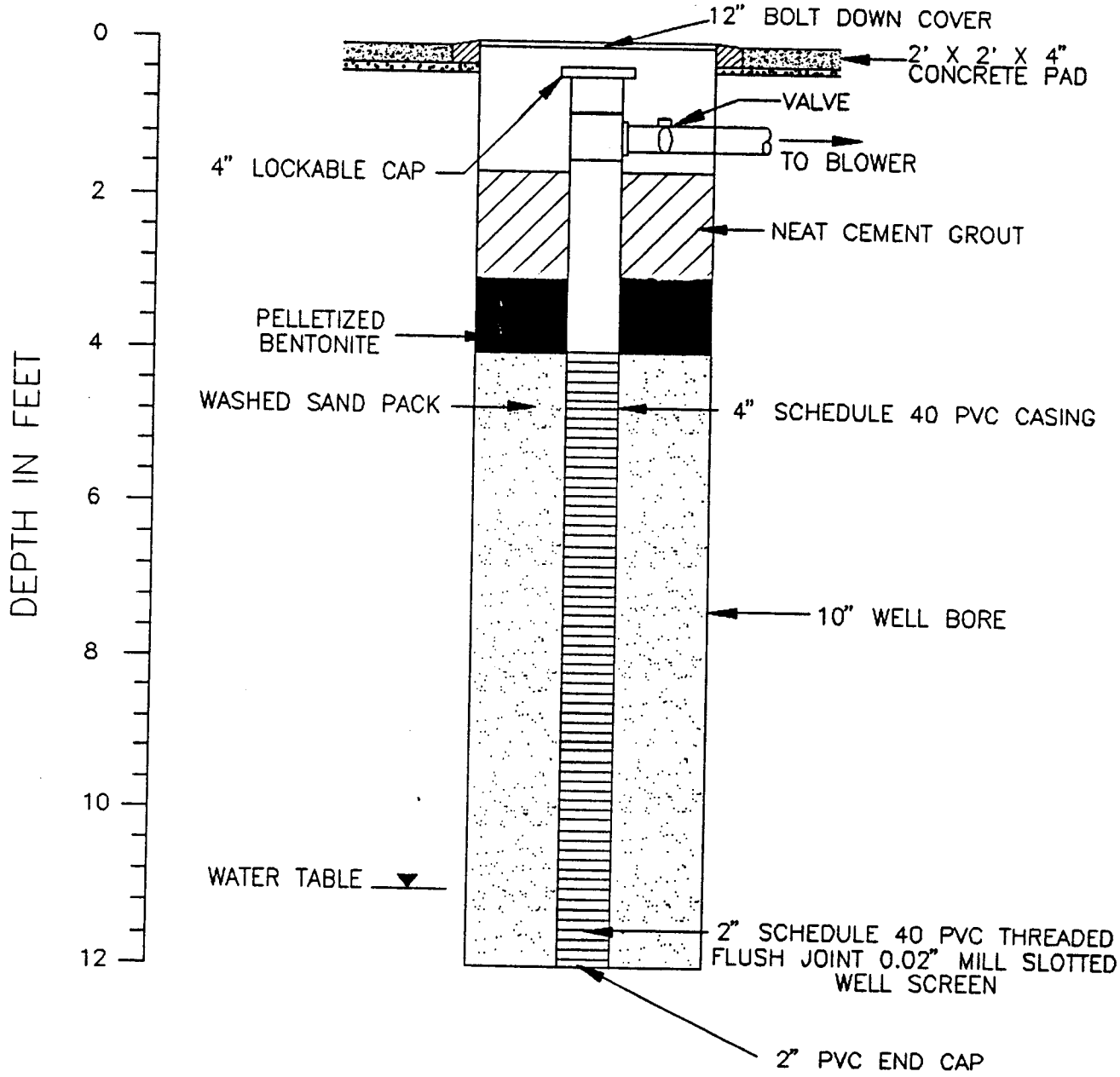

EXXON COMPANY, U.S.A.
EXXON COMPANY, U.S.A.
RETAIL LOCATION 4-3998
GREENSBORO, NORTH CAROLINA

FIGURE 11.

TYPICAL VAPOR EXTRACTION POINT CONSTRUCTION DIAGRAM

7544SVE.DWG
1/25/94:KH/JP

ERM-SOUTHEAST, INC
CHARLOTTE, NC

from Corrective Action Plan, ERM-Southeast, Inc. (1994)

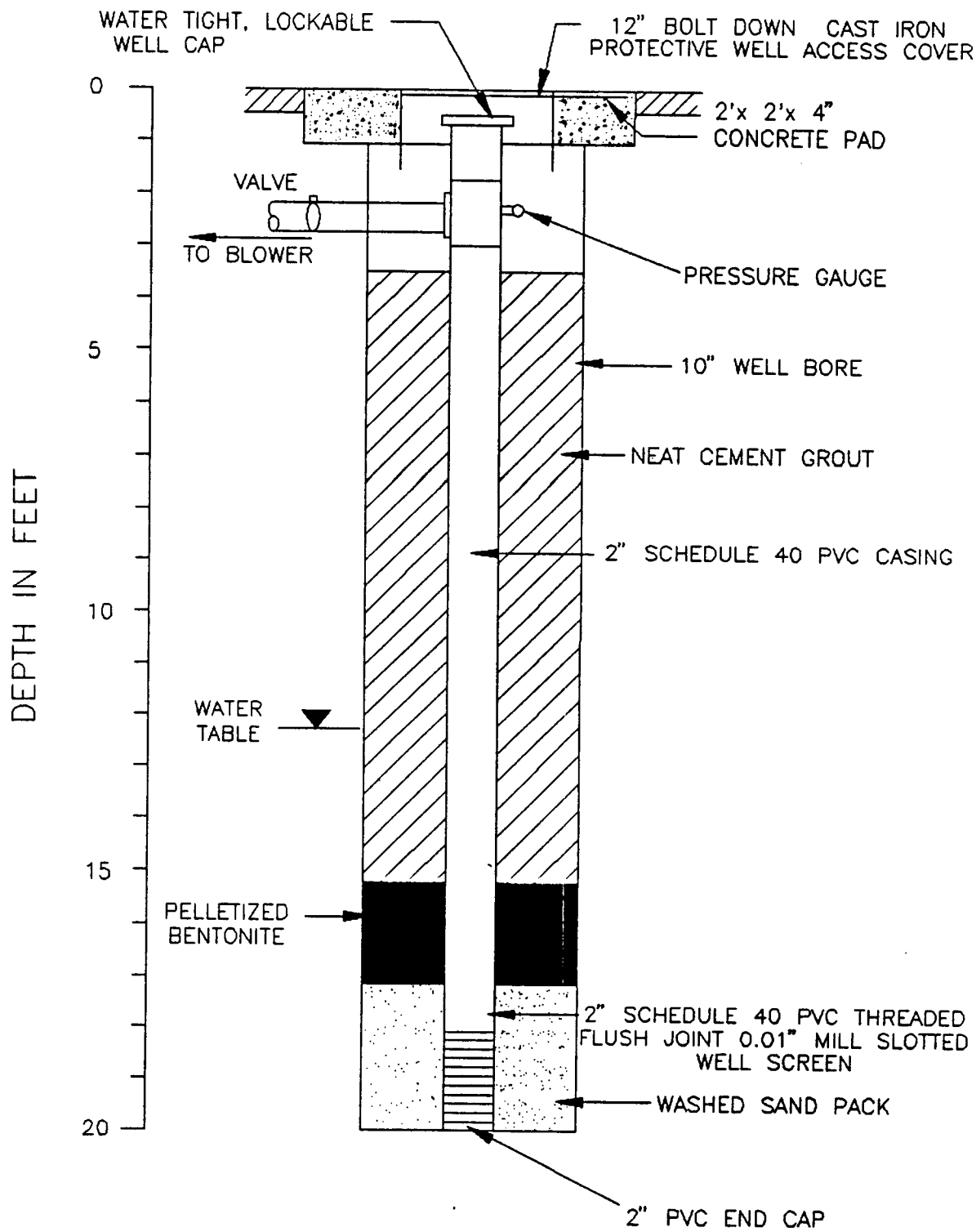

EXXON COMPANY, U.S.A. RETAIL LOCATION 4-3998 GREENSBORO, NORTH CAROLINA	**FIGURE 10.** TYPICAL AIR SPARGING POINT CONSTRUCION DIAGRAM	7544AS.DWG 1/27/94:KH/JP ERM-SOUTHEAST, INC CHARLOTTE, NC

from Corrective Action Plan, ERM-Southeast, Inc. (1994)

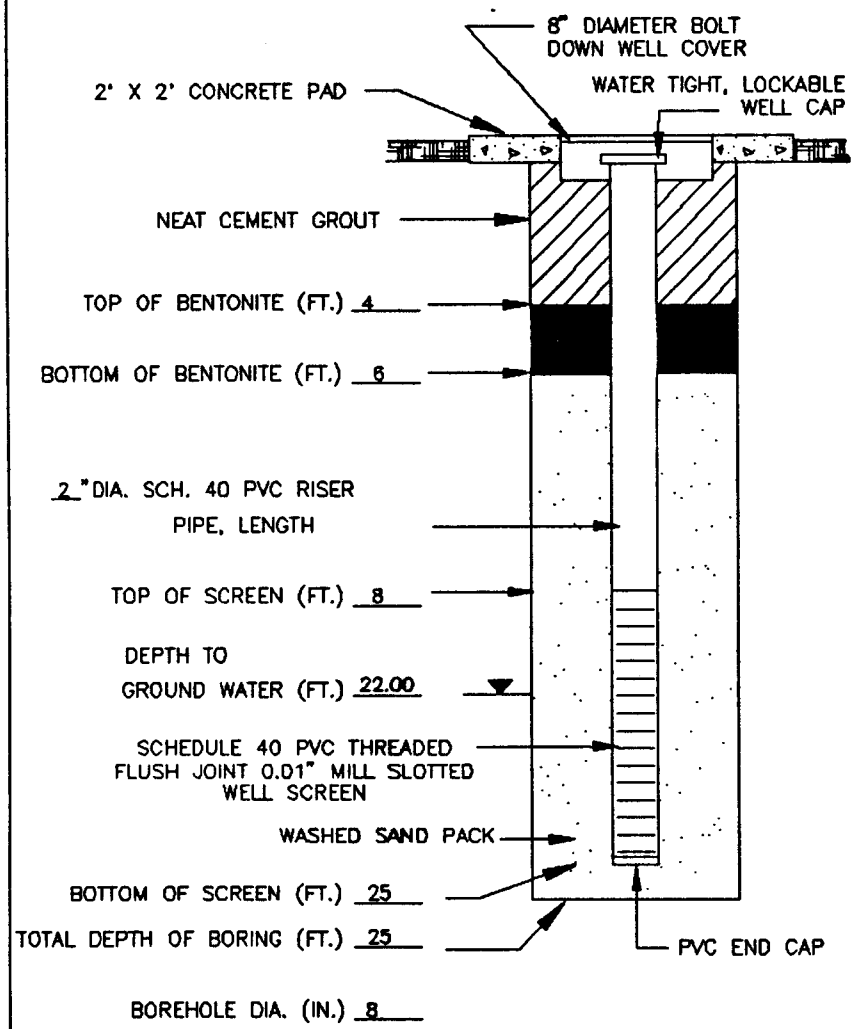

Sample Interval (ft.)	Sample Type/ Number	Blow Count per 6 inches	VOC (ppm)	Description
4-6	S	pushed	7.4	Red Clay. Stiff. Recovery 1.7 ft.
9-11	S	2,3,3,4	20	Orange, red and tan clayey Silt (30% clay). Saprolite, moist, slight odor. Recovery = 1.6 ft.
14-16	S	2,2,2,3	58	Medium brown, tan and orange clayey Silt (30% clay). Saprolite, moist, odor. Recovery = 1.8 ft.
19-21	S	3,2,2,3	148	Orange, brown and red clayey Silt, Saprolite very moist, strong odor. Recovery = 1.8 ft.
24-26	S	1,3,3,5	162	Red-tan and orange-brown clayey Silt (30% clay). Saprolite, wet, strong odor,

Notes:

ppm = Parts per million
VOC = Volatile organic compound
S = Split spoon sample
AS = Auger sample
BS = Miscellaneous sample
RC = Rock core

DATE 03/09/94
DRILLING METHOD HOLLOW STEM AUGER
DRILLING CO. SOUTHEASTERN ENVIRONMENTAL SERVICE
TOP OF CASING ELEVATION (ft.) 96.79
DRILLER STEVE STRATTON
LOG BY ANDY NUNNALLY

EXXON COMPANY, U.S.A.
RETAIL LOCATION 4-3998
4701 WEST MARKET STREET
GREENSBORO, NORTH CAROLINA

OP-1

DRILLING LOG AND MONITOR WELL CONSTRUCTION DIAGRAM

41060P1.DWG
07/05/94:RHR/AN

ERM-SOUTHEAST, INC
CHARLOTTE, NC

TYPE2LOG.DWG

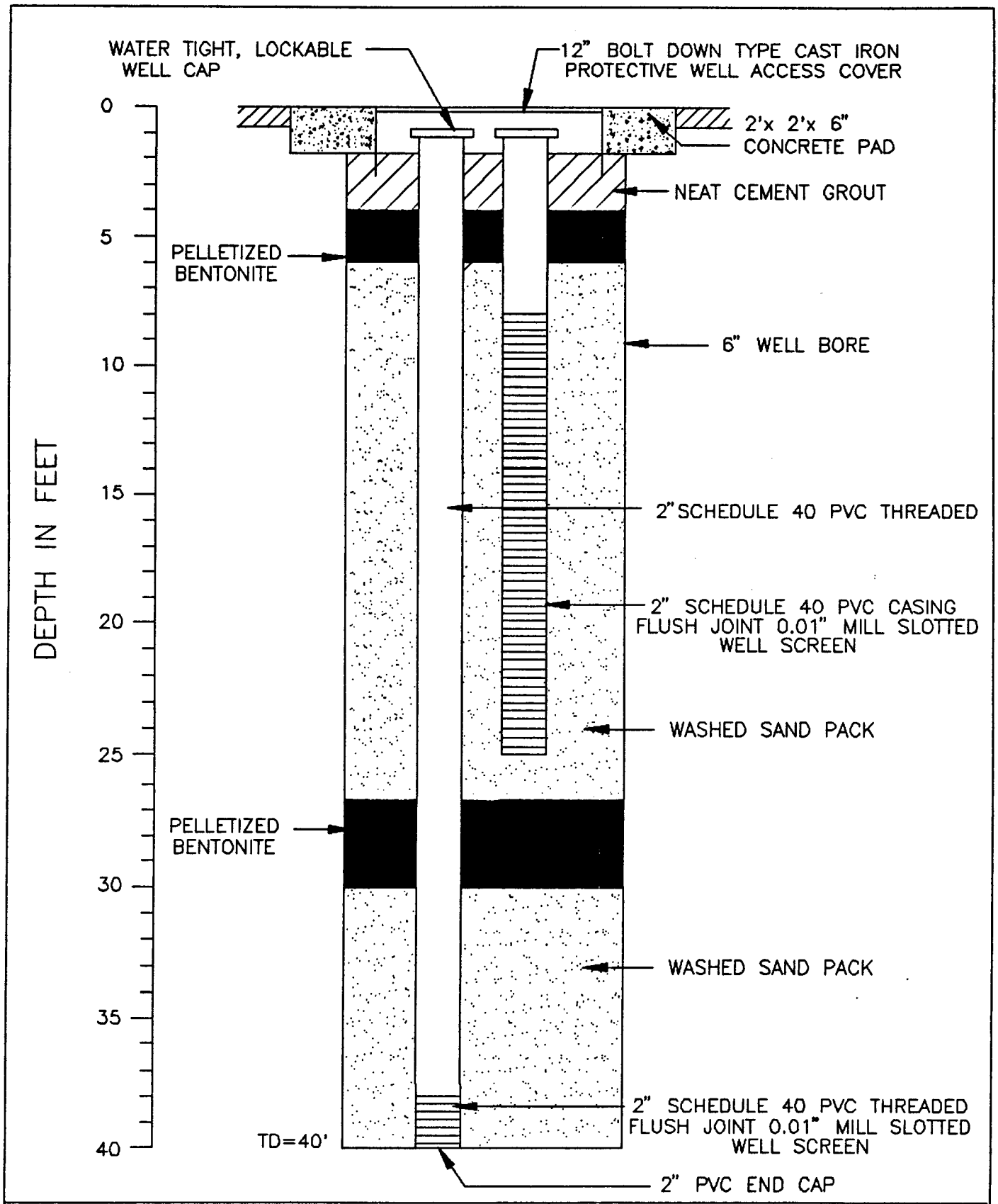

AS/EP-1 CONSTRUCTION DIAGRAM
EXXON COMPANY, U.S.A.
RETAIL LOCATION 4-3998
GREENSBORO, NORTH CAROLINA

ERM-SOUTHEAST, INC

ERM

4106DWEL.DWG

EQUIPMENT INFORMATION

ROOTS DRESSER

$2.00

Universal RAI BLOWER

INSTRUCTIONS

ROTARY LOBE BLOWERS

CONTENTS

NUMBERS IN ( ) ARE METRIC EQUIVALENTS

INFORMATION SUMMARY.....This page
Receiving. . .Installing. . .Operating

OPERATING CHARACTERISTICS.....2
Description. . .Control. . .Protection

OPERATING LIMITATIONS.....2
Pressure. . .Temperature. . .Speed

BLOWER ORIENTATION.....3

INSTALLATION.....5
Mounting. . .Aligning. . .Piping

LUBRICATION.....7
Oil Fill. . .Servicing. . .Greasing

OPERATION.....8
Starting. . .Checking. . .Running

TROUBLE SHOOTING.....9
Capacity. . .Power. . .Heating

SAFETY PRECAUTIONS.....10
Physical. . .Operating. . .General

MAINTENANCE/REPLACEMENTS.....10
Servicing. . .Repairs. . .Clearances

PARTS DRAWINGS.....14

DISTRIBUTORS.....24

DO THESE THINGS To Get The Most From Your Roots Blower

1 Check shipment for damage. If found, file claim with carrier and notify Sales Office.

2 Unpack shipment carefully, and check contents against Packing List. Notify Sales Office if a shortage appears.

3 Store in a clean, dry location until ready for installation, if possible. Lift by methods discussed under INSTALLATION to avoid straining or distorting the equipment. Keep covers on all openings. Protect against weather and corrosion if outdoor storage is necessary.

4 Read LIMITATIONS and INSTALLATION sections in this manual and plan the complete installation.

5 Provide for adequate safeguards against accidents to persons working on or near the equipment during both installation and operation. See SAFETY PRECAUTIONS.

6 Install all equipment correctly. Foundation design must be adequate and piping carefully done. Use recommended accessories for operating protection.

7 Make sure both driving and driven equipment is correctly lubricated before start-up. See LUBRICATION.

8 Read starting check points under OPERATION. Run equipment briefly to check for installation errors and make corrections. Follow with a trial run under normal operating conditions.

9 In event of trouble during installation or operation, do not attempt repairs of Roots furnished equipment. Notify Sales Office or factory, giving all nameplate information plus an outline of operating conditions and a description of the trouble.

10 Unauthorized attempts at equipment repair may void Manufacturer's warranty. Units out of warranty may be repaired or adjusted by the owner. It is recommended that such work be limited to the operation described in this manual, using Factory Parts. Good inspection and maintenance practices should reduce the need for repairs. See Distributor List on last page for parts and service after warranty period.

NOTE — Information in this manual is correct as of the date of publication. The Manufacturer reserves the right to make design or material changes without notice, and without obligation to make similar changes on equipment of prior manufacture.

Bulletin IRB-103-994

EDMAC COMPRESSOR COMPANY
106 Leventis Drive
Columbia, SC 29209
Phone 803-695-0082
Fax 803-695-1336

Quote: 95269H
Date: 05/23/95
Page: 1 of 2

QUOTATION

To: RTRS
116 Southside Drive
Charlotte, NC 28217-1726

Attn: Jim Hurte
Ref: Soil Vapor Extraction (RTRS #448)
Fax: 704-522-8892 Tel: 704-527-3227

Job Requirements:		Job Conditions:		Equipment Data:	
Flow:	100 SCFM	Elevation:	ft.	Power:	6.00 BHP
		Ambient Press:	14.70 PSIA	Speed:	3492 RPM
Vacuum:	12.00 "HgVa	Ambient Temp:	100 °F	Temp Rise:	112 °F
		Inlet Press:	7.82 PSIA	Dischg Tmp:	212 °F
		Inlet Temp:	100 °F	Inlet Conn:	1.50 NPT
				Dischg Conn:	1.50 NPT

EQUIPMENT: ROOTS 42 U-RAI Vacuum Package

COMPONENT LISTING:

Qty	Component	Description
1	Blower:	ROOTS 42 U-RAI Positive Displacement Rotary Type
1	Motor:	7.5 HP, TEFC, 1725 RPM, 208,230-460/3/60 MOTOR
1	Mtr Slide Base:	213T Adjustable Slide Base
1	Base Frame:	One-pc Steel w/Mounting Holes
1	V drive:	1.5 Service Factor, Static Dissipating
1	Beltguard:	Totally Enclosed, OSHA Approved

* = Component will be shipped loose.

Continued on next page.

Roots - Blower Selection 2.9 Monday May 22, 1995 7:44 am

Selected Unit

Model:	42 URAI		Summary:	<list>
Inlet Volume (ACFM):	166	SCFM: 100	Gas:	AIR
Inlet Pressure (PSIA):	8.83		K-Value:	1.395
Inlet Temperature:	68		Specific Gravity:	0.996
Discharge Pressure (PSIA):	14.90		Molecular Weight:	28.875
Inlet Vacuum (HG):	12.00	80%	Elevation/Feet:	0
Ambient Pressure (PSIA):	14.70		Relative Humidity:	36%
Speed (RPM):	3492	97%	Ambient Temperature:	100
Brake Horsepower:	6.0		Motor Type:	TEFC
Temperature Rise (Deg. F):	112	46%		

Discharge Temperature (Deg. F):	180
Discharge Volume (ACFM):	119
Gear Tip Speed (FPM):	3660
Estimated B10 Bearing Life (HRS):	1305000
Estimated Noise Level at 1 Meter (DBA):	92.7

<Esc> Print Proposal, <F7> Cancel, <F10> Next, <F8> Previous

SPECIFICATIONS

ROOTSPAK™

Universal RAI®

Packaged units (Patent pending)

BASIC PACKAGE DESCRIPTION

Roots offers 5 RootsPak sizes of completely assembled, factory engineered and guaranteed packages incorporating 16 frame sizes of Universal RAI rotary positive blowers with flows to 1600 ICFM, pressures to 15 psig or vacuums to 16" Hg.

The basic package consists of the blower, V-belt drive, OSHA guard, motor slide base, inlet filter and inlet silencer all mounted on top of a heavy-duty, unitized base/discharge silencer in one compact, easy to install package. A pressure relief valve is mounted on the discharge silencer. *Motor and other accessories optional.

The combination base/discharge silencer is a rigid, one-piece weldment, reinforced for minimal vibration. The inlet filter is supplied with a 10 micron pleated paper element. All standard components are designed for indoor or outdoor operation.

The Universal RAI blower consists of a cast iron casing, carburized and ground alloy steel timing gears secured to steel shafts with a taper mounting and locknut, and cast iron involute impellers. Oversized anti-friction bearings are used, with a cylindrical roller bearing at the drive shaft on all models to provide increased bearing life and to withstand V-belt pull. The Universal RAI features thrust control, with splash oil lube on the gear end and grease lube on the drive end.

RootsPak units are factory painted and skidded for shipping and handling.

EVERY GROWING PLANT NEEDS ROOTS

OUTLINE DRAWING & DIMENSIONAL TABLE

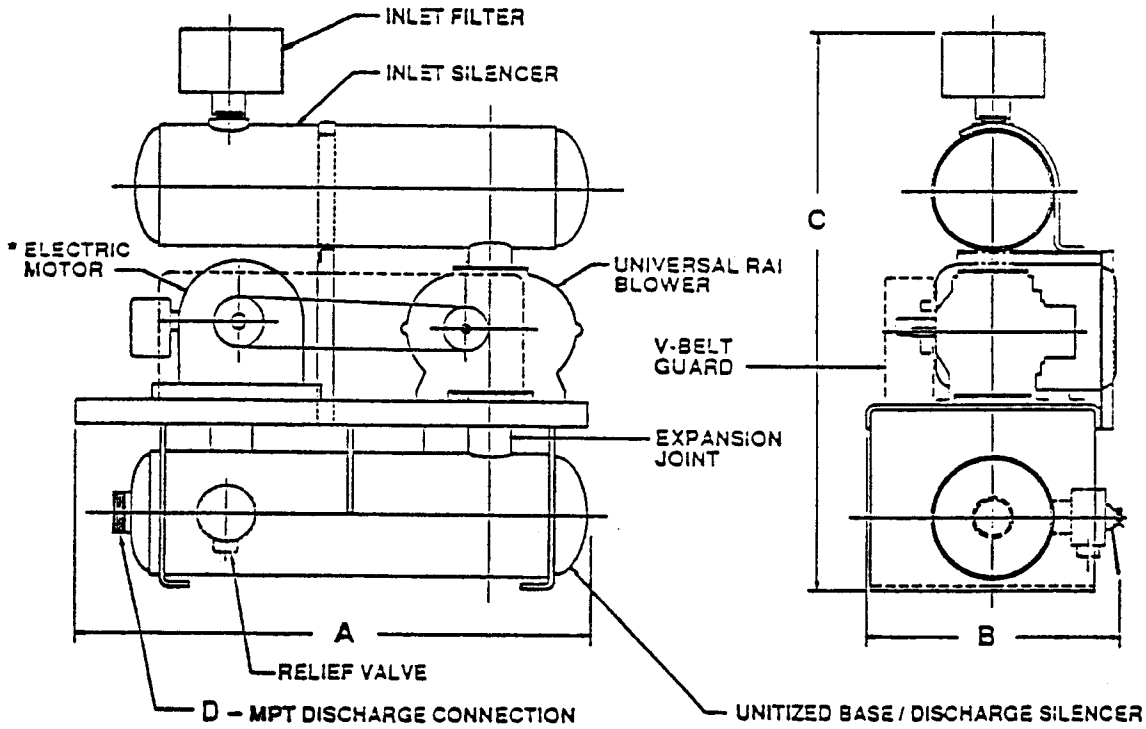

NOTES:
1. All dimensions are in inches.
2. Dimensions are approximate – do not use for construction. Packages may not be exactly as shown.
3. Basic package weights do not include blower and motor. For blower weight, see reverse side of sheet.

RootsPak Size	Blower Frame Sizes	A	B	C	D	Approx. net weight (3)
2	22, 24, 32, 33, 42	39	26	46	2	190 lbs.
2-1/2	36, 45, 53	45	30	56	2-1/2	230 lbs.
3	47, 65	52	33	64	3	320 lbs.
4	56, 59, 76	56	37	79	4	460 lbs.
6	68, 615, 711	66	39	85	6	680 lbs.

PERFORMANCE TABLE

BLOWER FRAME SIZE (WGHT)	SPEED RPM	1 PSI CFM	1 PSI BHP	2 PSI CFM	2 PSI BHP	3 PSI CFM	3 PSI BHP	4 PSI CFM	4 PSI BHP	5 PSI CFM	5 PSI BHP	6 PSI CFM	6 PSI BHP	7 PSI CFM	7 PSI BHP	10 PSI CFM	10 PSI BHP	11 PSI CFM	11 PSI BHP	12 PSI CFM	12 PSI BHP	15 PSI CFM	15 PSI BHP	MAX. VACUUM "Hg	MAX. VACUUM CFM	MAX. VACUUM BHP
	1160	10	0.2	7	0.3	4	0.3	2	0.4															4	6	0.3
2	3600	49	0.6	46	0.8	43	1.1	41	1.3	39	1.6	38	1.8	36	2.1	32	2.3	31	3.1	29	3.3			14	28	2.0
(32)	5275	76	0.8	73	1.2	70	1.6	68	1.9	66	2.3	64	2.7	63	3.1	59	4.2	57	4.5	56	4.9			14	55	3.0
	1160	24	0.3	19	0.4	15	0.6	11	0.8	8	0.9													6	12	0.6
24	3600	102	0.8	97	1.3	93	1.8	89	2.3	86	2.8	83	3.3	81	3.8									14	69	3.3
(43)	5275	156	1.2	150	1.9	146	2.7	143	3.4	140	4.2	137	4.9	135	5.6									14	122	5.5
	1160	40	0.4	34	0.6	30	0.9	27	1.1	24	1.3	21	1.6	19	1.8									10	18	1.3
32	2800	113	1.0	108	1.6	104	2.1	101	2.7	98	3.2	95	3.8	93	4.3	86	6.0	84	6.5	82	7.1	77	8.7	15	78	4.5
(69)	3600	149	1.3	144	2.0	140	2.7	137	3.4	134	4.1	131	4.8	129	5.5	122	7.7	120	8.4	118	9.1	113	11.2	15	114	5.3
	1160	55	0.5	48	0.8	43	1.1	39	1.4	35	1.7	31	2.1	28	2.4									10	27	1.7
33	2800	156	1.2	149	2.0	144	2.7	140	3.5	136	4.2	132	5.0	129	5.7	120	8.0	118	8.7	116	9.5			14	113	5.5
(74)	3600	205	1.6	199	2.5	193	3.5	189	4.5	185	5.4	181	6.4	178	7.4	170	10.3	167	11.2	165	12.2			14	163	7.2
	1180	95	0.7	85	1.2	78	1.7	72	2.3	66	2.8	61	3.3	57	3.8									10	55	2.7
36	2800	252	1.7	253	3.0	245	4.2	239	5.4	234	6.7	229	7.9	224	9.2									12	213	7.8
(102)	3600	344	2.2	334	3.8	327	5.4	321	7.0	315	8.6	310	10.2	306	11.8									14	284	11.5
	860	38	0.4	32	0.6	28	0.9	24	1.1	21	1.3	18	1.5	15	1.8									8	19	1.1
42	1760	92	0.8	87	1.3	82	1.8	78	2.2	75	2.7	72	3.1	69	3.6	62	5.0	60	5.5	58	5.9			14	56	3.5
(88)	3600	204	1.7	198	2.5	194	3.6	190	4.5	186	5.5	183	6.4	181	7.4	173	10.2	171	11.2	169	12.1	163	15.0	14	167	7.2
	860	79	0.6	68	1.1	60	1.5	53	2.0	48	2.4	42	2.9	37	3.4									8	46	1.9
45	1760	188	1.3	177	2.2	169	3.1	162	4.1	156	5.0	151	5.9	146	6.9	133	9.5							12	134	5.8
(109)	3600	410	2.5	400	4.5	392	6.4	385	8.3	379	10.2	374	12.1	369	14.0	356	19.7							14	345	13.7
	860	109	0.8	97	1.4	89	2.0	81	2.6	74	3.2	68	3.8	63	4.4									8	72	2.5
47	1760	253	1.6	241	2.8	232	4.0	225	5.3	218	6.5	212	7.7	206	8.9									12	193	7.5
(128)	3600	546	3.2	535	5.7	525	8.2	518	10.7	511	13.2	505	15.8	500	18.3									14	473	17.3
	700	72	0.6	63	1.0	56	1.4	51	1.8	46	2.2	42	2.6	38	3.0									10	36	2.2
53	1760	211	1.5	203	2.5	196	3.6	191	4.6	186	5.6	181	6.6	177	7.6	167	10.7	163	11.7	160	12.7			14	158	7.5
(143)	2850	355	2.5	345	4.1	340	5.8	334	7.4	329	9.1	325	10.7	321	12.3	310	17.2	307	18.9	304	20.5	295	25.4	14	301	12.1
	700	123	0.9	110	1.6	100	2.2	92	2.9	85	3.6	78	4.3	72	4.9									10	70	3.5
56	1760	358	2.2	345	3.9	335	5.6	325	7.3	319	9.0	312	10.7	306	12.4	290	17.5							14	276	12.1
(170)	2850	598	3.6	585	6.4	575	9.1	567	11.9	560	14.6	553	17.3	547	20.1	531	28.3							14	517	19.7
	700	187	1.2	170	2.2	158	3.2	147	4.2	138	5.1	130	6.1											8	135	4.1
59	1760	529	3.0	513	5.5	500	8.0	490	10.5	480	12.9	472	15.4	464	17.9									12	445	15.1
(204)	2850	881	4.9	865	8.9	852	12.9	842	16.9	832	20.9	824	25.0	816	29.0									14	779	29.3
	700	140	1.0	125	1.8	116	2.5	107	3.3	100	4.1	93	4.8	86	5.5	70	7.3							12	71	4.7
65	1760	400	2.5	387	4.5	377	6.4	368	8.3	360	10.2	353	12.1	347	13.9	330	19.6	325	15.3	320	23.4	307	29.1	16	300	15.5
(245)	2350	546	3.5	532	6.0	522	8.5	513	11.1	506	13.6	499	16.1	492	18.6	475	26.2	470	28.7	466	31.2	452	38.8	16	445	20.7
	700	224	1.5	203	2.7	187	3.9	172	5.1	160	6.3	149	7.5	139	8.7									10	135	6.2
68	1760	643	3.8	621	6.8	605	9.8	591	12.9	579	15.9	567	18.9	557	22.0	530	31.0	522	34.1	515	37.1			15	495	23.0
(295)	2350	876	5.0	855	9.1	838	13.1	824	17.2	812	21.2	801	25.3	790	29.3	763	41.5	755	45.5	748	49.6			16	715	32.6
	700	420	2.5	380	4.3	351	7.1	323	9.3	301	11.6	279	13.8											8	292	9.1
615	1760	1205	6.4	1164	12.1	1133	17.8	1107	23.5	1084	29.1	1063	34.8											12	997	34.1
(425)	2350	1641	8.6	1601	16.1	1570	23.7	1544	31.3	1521	38.9	1500	46.5											12	1433	45.5
	575	195	1.3	179	2.3	168	3.3	158	4.3	150	5.4	142	6.4	134	7.4	115	10.4							12	117	6.2
76	1400	526	3.2	511	5.7	500	8.1	490	10.6	481	13.0	473	15.5	466	17.9	447	25.3	441	27.8	436	30.2	421	37.6	16	413	20.0
(400)	2050	788	4.7	772	8.3	761	11.9	751	15.5	742	19.1	734	22.7	727	26.3	708	37.1	703	40.7	697	44.2	682	55.0	16	674	29.2
	575	362	2.2	336	4.0	316	5.9	299	7.7	284	9.6	271	11.4	258	13.3	226	18.8							12	229	11.2
711	1400	970	5.3	944	9.8	925	14.3	908	18.8	893	23.3	880	27.8	867	32.3	835	45.8							15	793	33.8
(530)	2050	1450	7.7	1424	14.3	1404	20.9	1387	27.5	1373	34.1	1359	40.7	1347	47.3	1315	67.1							16	1256	52.7

Notes:
1. Pressure ratings based on inlet air at standard pressure of 14.7 psia, standard temperature of 68°F, and specific gravity of 1.0.
2. Vacuum ratings based on inlet air at standard temperature of 68°F, discharge pressure of 30" Hg and specific gravity of 1.0. Consult factory for RootsPak optional vacuum packages.
3. Blower weights shown are approximate net weights in pounds.

DESIGN & CONSTRUCTION FEATURES

1. Factory engineered, factory guaranteed
2. Compact package designed for ease of handling and installation
3. Indoor or outdoor operation (when ordered with suitable motor enclosure)
4. Blower covered by 18/24 month uncontested warranty
5. Refer to bulletin B-5125 for Universal RAI blower details

ROOTS DRESSER
DRESSER INDUSTRIES, INC.
ROOTS DIVISION
900 WEST MOUNT STREET, CONNERSVILLE, INDIANA 47331
TELEPHONE: 317/827-9200 FAX: 317/825-7669

S-5121P
Revised February 1993

All specifications subject to change without notice
©1992, Dresser Industries, Inc.

KUNKLE
Valve Division

IRON SAFETY AND VACUUM VALVES

MODELS 215V 337

ASME Standard
UV
N.B. Certified

PRESSURE LIMITS 337 — 60 PSIG-300°F.

VACUUM LIMITS 215V — 22" HG.-300°F.

APPLICATIONS

- Protection of low to medium pressure high volume blowers, compressors and pneumatic conveying systems.
- Bulk hauling trailers/equipment.
- Light gauge tanks.
- Protection of high volume vacuum pumps and conveying systems.

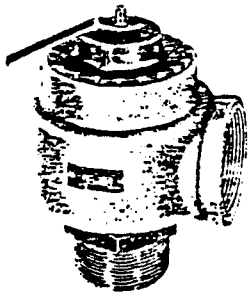

MODEL 337

FEATURES

High capacity full nozzle design. Bronze nozzle, disc and guide with cast iron housing. Flat bronze valve seats are lapped for optimum performance. Warn ring offers easy adjustability for precise opening with minimum preopen or simmer and exact blowdown control. Pivot between disc and spring corrects mis-alignment and compensates for spring side thrust. Model 337 has reversible lift lever for "pull-up" or "pull-down" manual testing. Every valve 100% tested/inspected for pressure setting, blowdown and leakage. All adjustments are factory sealed to prevent tampering or dis-assembly.

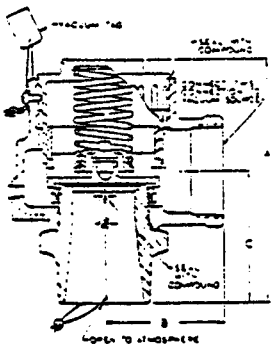

MODEL 215V

SPECIFICATIONS

SIZE IN & OUT	A 337	A 215V	B	C	WGHT LBS.
2"	7¼	6¾	3¼	3¼	8
2½"	8	7½	3¾	3¾	12
3"	9½	9	4¼	4¼	19

CAPACITIES

SCFM Air, 60°F., 10% Accumulation

Set Pressure PSIG	MODEL 337 2"	MODEL 337 2½"	MODEL 337 3"
5	527	799	1157
10	743	1127	1632
15	903	1368	1982
20	1062	1609	2331
25	1221	1850	2680
30	1380	2091	3029
35	1539	2332	3379
40	1698	2573	3728
45	1857	2814	4076
50	2017	3055	4428
60	2335	3537	5125

Set Inches Mercury	MODEL 215V 2"	MODEL 215V 2½"	MODEL 215V 3"
1	140	213	303
2	217	329	477
3	264	400	579
4	299	453	657
5	331	501	726
6	352	533	772
7	372	564	817
8	391	592	858
9	403	610	884
10	413	625	906
11	424	642	930
12.8 –	425	646	935

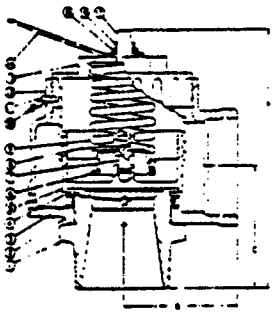

MODEL 337

MODEL NUMBER/ORDER GUIDE

MODEL NO. POSITION	1	2	3	4	5	6	7	8	9	10	11	12	13	14	15
EXAMPLE	2	1	5	V	—	H	0	1	—	Q	E				
	0	3	3	7											

INLET SIZE
H — 2"
J — 2½"
K — 3"

VARIATION (01 thru 99)
Number Provided Only by Manufacturer to Cover Specific Feature or Option.

DESIGN REVISION
Indicates Non-Interchangeable Revision. Dash (–) If Original Design

VALVE SERVICE
K-Air ASME Sec VIII (Model 337 Only)
Q-Vacuum (Model 215V Only)

SPRING MATERIAL
E-Stainless (302)

SET PRESSURE
Models 337 2 PSIG (0002) thru 50 PSIG (0050)
Model 215V 1" HG (Inches of Mercury) (0001) thru 22" HG (0022) Vacuum

8222 Bluffton Road
Box 1740
Fort Wayne, Indiana 46801-1740
219-747-1533
FAX 219-747-7958

IMPORTANT: Kunkle Valve Division is not liable for any damage resulting from misuse or misapplication of its products (see warranty)

REV 1/91

Universal's Vacuum Pump Silencers and Separator Silencers

Whether your vacuum pump problems are inlet or discharge noises – water or liquid droplets being carried over into vacuum pump inlet or discharged into the atmosphere – or a combination of both – Universal has the unit ideally suited for your operational requirements.

Universal can attenuate inlet or discharge noises – as well as separate out liquids – which costs you needless horsepower.

Any way you look at it, Universal's Vacuum Pump Separators Silencers can save you money – will create better employee relations – and make your community a quieter place to live in.

REFERENCE TABLE

INLET SEPARATOR SILENCERS

VI Series	Medium degree silencing, 95% water removal.
UVS Series	Medium degree silencing, 99% + water removal.

DISCHARGE SEPARATOR SILENCERS

VDY Series USVY Series	High degree silencing, 95% water removal.
UCS Series	Medium degree silencing, 99% + water removal.
USS Series	High degree silencing, 99% + water removal.
URS Series	Critical degree silencing, 99% + water removal.

Inlet Separator Silencers

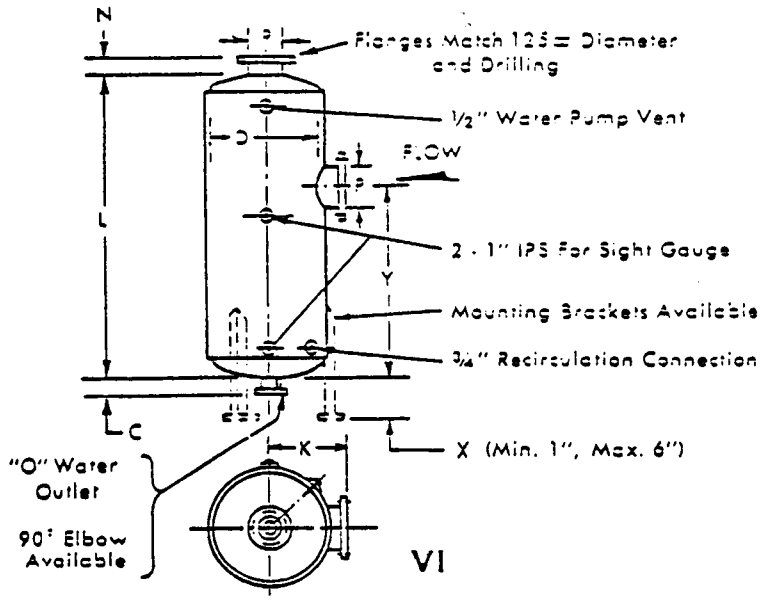

Model	Capacity CFM	Capacity GPM	P	D	N	L	K	C	Y	O	Weight	** Gal.
VI-4	500	25	4	14	3	41½	10½	***	21	2	130	11
VI-5	800	40	5	16	3	47½	11½	***	24	3	180	16
VI-6	1,200	60	6	18	3	54	12½	***	27	3	225	22
VI-8	2,050	100	8	22	3½	66½	14½	3½	33	4	350	40
VI-10	3,250	140	10	26	3½	92	16½	3½	47	4	550	70
VI-12	4,700	180	12	30	3½	105	18½	3½	53	6	825	130
VI-14	6,000	210	14	36	3½	113	21½	3½	56	6	1,100	185
VI-16	8,000	250	16	42	3½	121	24½	3½	64	6	1,450	285
VI-18	10,000	300	18	48	3½	125½	27½	3½	66	6	2,000	375
VI-20	12,000	350	20	54	4½	136	31½	3½	68	8	2,500	475
VI-22	15,000	400	22	60	4½	138	34½	3½	70	8	2,300	590
VI-24	18,000	450	24	60	4½	156	36½	3½	77	8	3,100	660
VI-26	21,500	500	26	66	4½	175½	39½	3½	85	8	4,300	875
VI-30	28,500	600	30	72	4½	189	45½	3½	100	8	5,700	1,250

** Gal. Storage Capacity before carryover occurs

*** Tank Flange Drain

UNIVERSAL SILENCER

A DIVISION OF NELSON INDUSTRIES, INC.

We're Leading A Quiet Revolution®

Vacuum Pump Separator Silencers

Product Catalog No. 222B

UNIVERSAL SILENCER

A DIVISION OF NELSON INDUSTRIES, INC.

We're Leading A Quiet Revolution®

Rotary Positive Blower Silencers

Specifications
URB Group
URD Group

Chamber Type
Discharge Silencer

NOTE: Sizes 1" - 6" are URB Series; sizes 8" - 30" are URD Series. Both series are fundamentally the same in design and the performance characteristics are identical.

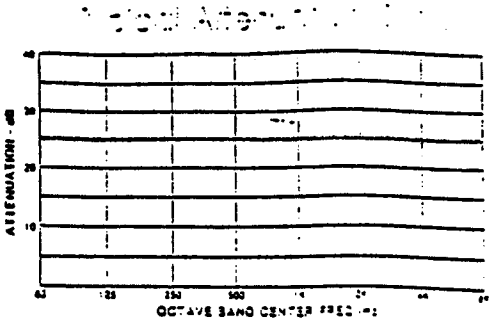

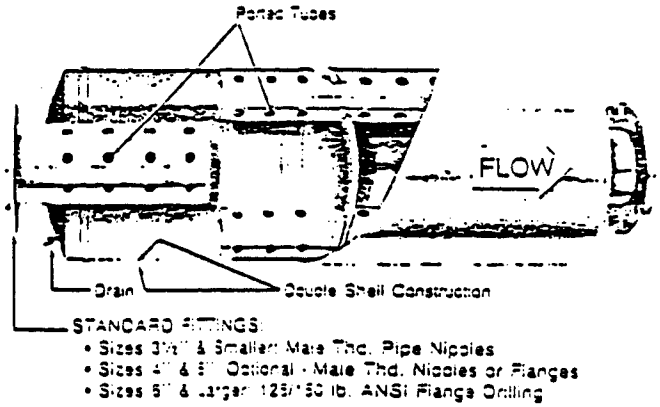

THE URD Series Discharge Silencer is a heavy-duty, all welded unit constructed of carbon steel sheet and plate. It provides pulse control and silencing adequate for most sub-critical PD/V applications. Sizes 4" and larger are equipped with flanged connections drilled to 125/150 lb. ANSI specifications. Smaller sizes are standard with male threaded pipe nipples. Exterior surfaces receive a shop coat of rust inhibitive primer and may be finish painted in the field if desired. The URD Series is the basic end inlet and outlet configuration. A low side inlet version is designated the URDY Series; high side inlet, URDH Series, and low opposed connections, URDS Series. The four types are fundamentally alike and the performance is identical. (Sizes 6" and smaller are URB Series rather than URD.) Mounting brackets and other options are available – see page 11.

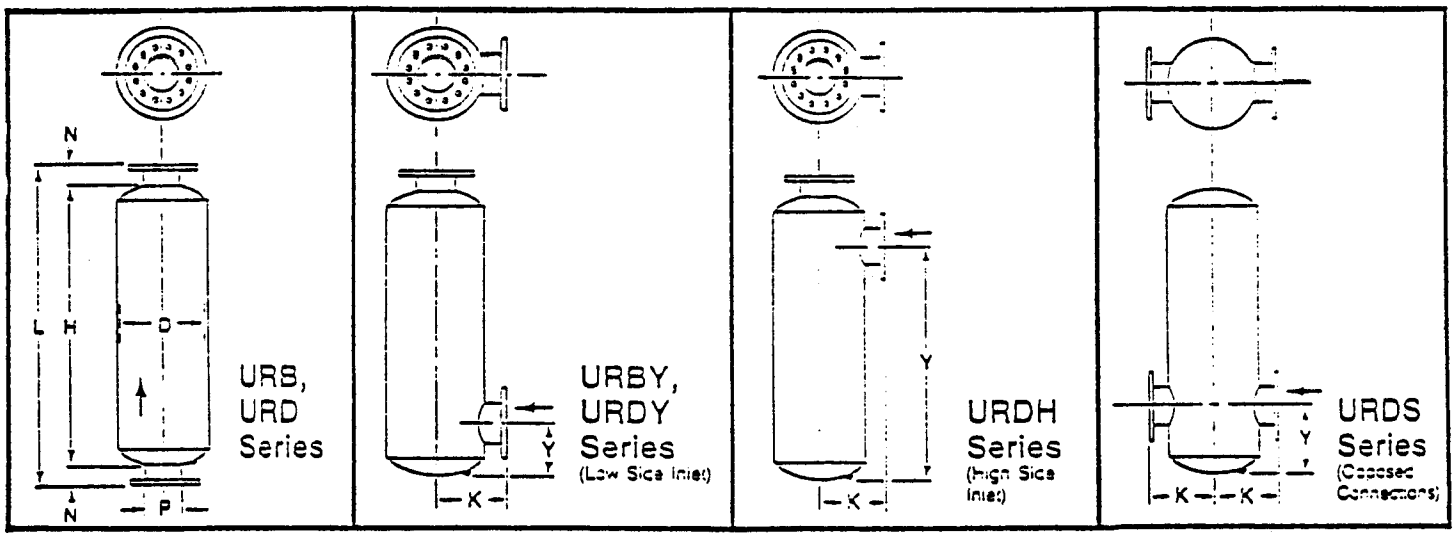

P (SIZE)	D	L	N	H	K	URBY, URDY MIN.	URBY, URDY MAX.	URDS MIN.	URDS MAX.	URDH MIN.	URDH MAX.	WGT.
1	4½	21	2	17	—	—	—	—	—	—	—	10
1½	6½	24	2	20	—	—	—	—	—	—	—	15
2	8	33	3	27	7	FIXED AT 5		—	—	—	—	20
2½	10	34	3	28	8	FIXED AT 7		—	—	—	—	30
3	10	46	3	40	8	FIXED AT 7		—	—	—	—	40
3½	12	52	3	46	9	FIXED AT 8		—	—	—	—	55
4	14	53	3	47	10	6	22	6	16	—	—	70
5	16	65	3	59	11	6½	29	9	19	—	—	120
6	18	72	3	66	12	8	32	10	22	—	—	160
8	22	97	3½	90	14½	9	43	12	29	62	82	370
10	26	122	3½	115	16½	11	63½	14	40½	76½	108	550
12	30	135	3½	128	18½	12½	69	15½	42	88	117½	800
14	36	161	3½	154	21½	14½	81	17½	49	107	141	1250
16	42	181	3½	174	24½	16½	92½	19½	55½	119½	159½	1600
18	48	198	3½	181	27½	18½	99	21½	58½	129½	164½	2300
20	48	202	4½	193	29½	19½	103	22½	61	134	175½	2500
22	54	204	4½	195	31½	21½	103	24½	60	137	175½	2950
24	54	239	4½	230	31½	22½	126	25½	75½	156½	210½	3450
25	60	259	4½	250	34½	25	132	27	78	175	225	4400
25	66	279	4½	270	37½	27	144	31	85	188	245	6150
30	72	304	4½	295	40½	29	161	32	96	203	272	7250

Dimensions In Inches. Weight In Lbs.

NOTE: Dimensions and weights are nominal and may vary slightly with production models. Request certified drawings of specific models for exact dimensions.

GAST

70 & 80 Series Vacuum Pumps and Compressors

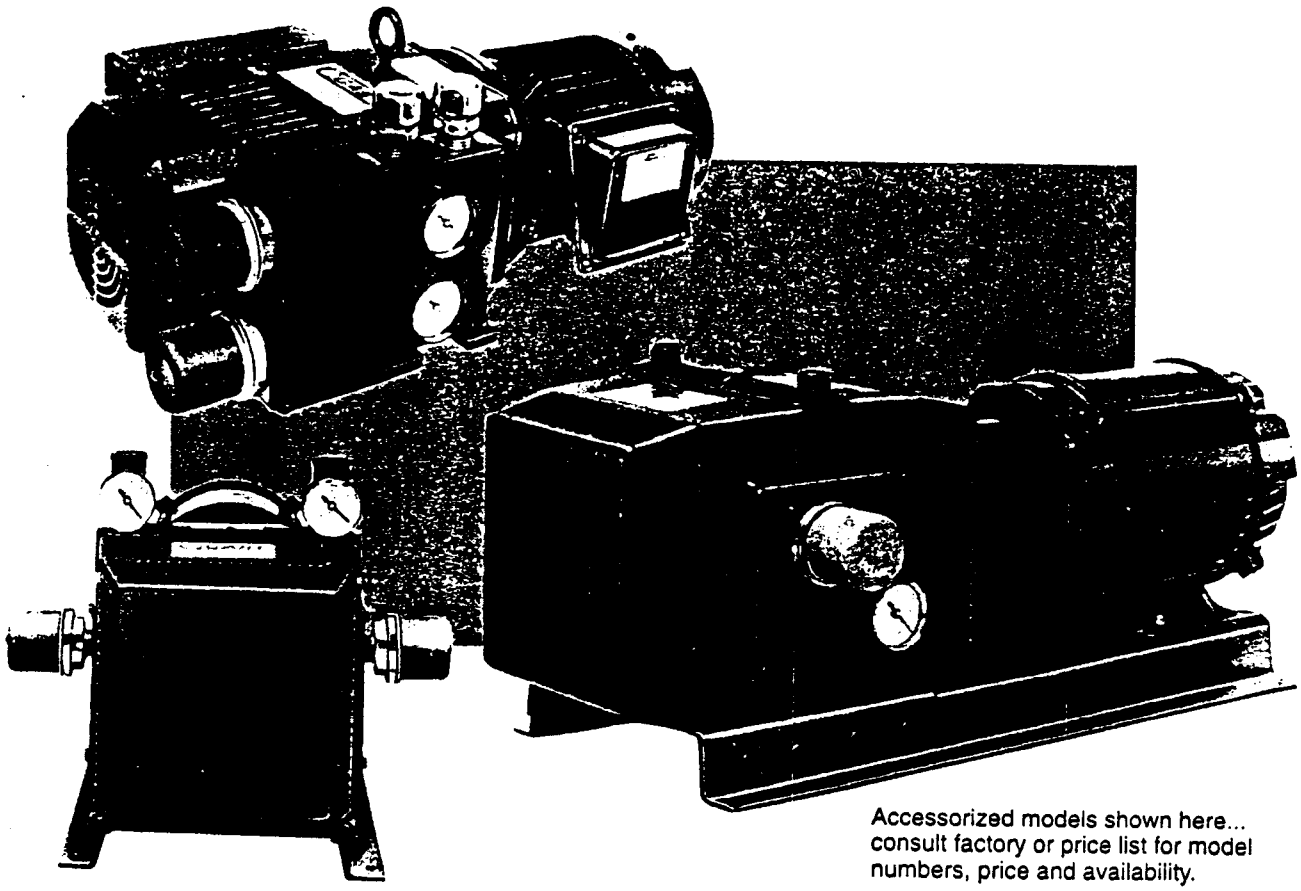

Accessorized models shown here... consult factory or price list for model numbers, price and availability.

Contents:

Features and Warranty 2
Oilless 70 Series Pressure 3
Oilless 70 Series Vacuum 5
Oilless 70 Series Dual-Function ... 7
Oilless 80 Series Pressure 9
Oilless 80 Series Vacuum 11
Oilless 80 Series Dual-Function . 13
International Sales Offices 15
North American Distributors 16

70 and 80 Series Vacuum Pumps, Compressors and Dual-Function Pumps

FEATURES

SIMPLE TO USE—Hassle-free units run without oil; therefore, you'll never burn up a pump that needed oil replacement. Also, you'll never blow oil on your finished product, process, or employees. The large, easy-to-service internal filters will perform for thousands of hours (depending on application) without maintenance.

QUIET—Low noise levels allow these units to operate without sophisticated, additional muffling—even in the office environment of small businesses. Sound levels vary between 62 and 75 db(A), depending on model selected and application.

RUGGED—Units withstand pressures and vacuums unachievable by competitive pumps on a continuous basis. As compressors, the "80" series operate up to 15 psig (1,03 bar) and as vacuum pumps to 26" Hg (133 mbar). The "70" series operate to 15 psig (1,03 bar) and 25" Hg (167 mbar).

ECONOMICAL—These units are not only competitively priced, they operate as both compressors and vacuum pumps simultaneously (when specified). Life of the pumps as double-function units meets or exceeds even our own single-function units, and variations in duty on either port have negligible effect on the flow and duty of the other.

Accessories/Kits

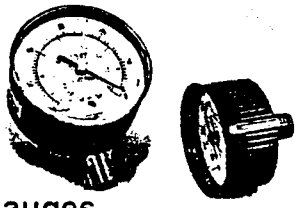

Gauges

Vacuum Gauge AA640
(¼" NPT, Bottom Mount)
Vacuum Gauge AE136
(¼" NPT, Back Mount)
Pressure Gauge AA644B
(¼" NPT, Bottom Mount)
Pressure Gauge AN190
(¼" NPT, Back Mount)

Regulators

Vacuum Regulator AN226 (¾" NPT, 15-55 cfm)
Vacuum Regulator AN226A (¾" BSP, 25-93 m³/h)
Pressure Regulator AN225
(¾" NPT, 15-45 cfm)
Pressure Regulator AN225A
(¾" BSP, 25-76 m³/h)
Pressure Regulator AN225B
(¾" NPT, 45-75 cfm)
Pressure Regulator AN225C
(¾" BSP, 76-127 m³/h)

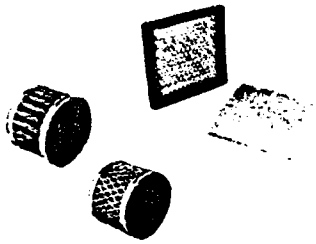

Filter/Muffler Kits

70 Series Vacuum Pumps K561
70 Series Compressors K563
70 Series Dual-Function Pumps K565
80 Series Vacuum Pumps K552
80 Series Compressors K547
80 Series Dual-Function Pumps K547

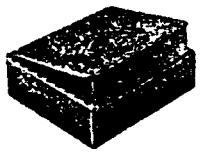

Complete Rebuild Kits

70 Series Vacuum Pumps K560
70 Series Compressors K562
70 Series Dual-Function Pumps K564
80 Series Vacuum Pumps K546
80 Series Compressors K551
80 Series Dual-Function Pumps K551

If your need for our 70 or 80 Series pump is in the graphic arts equipment area, particularly in replacing either a European model or another kind, please refer to the following chart. Gast offers a rugged, competitively priced alternative to a variety of models.

GAST	BECKER	RIETSCHLE	BUSCH	ORION
1070-V122-G624X	VT3.16	VFT25	SV1016	—
2070-V122-T900X	VT3.25	TL25V	SV1025	KRS5-SS
2080-V122-T337	—	VFT40/TR40V	—	KRS6-SS
3080-V122-T337	VT3.40	VFT60/TR60V	SV1040	—
4080-V122-T339	KVT2.60	VFT80/TR80V	—	KRS8-SS
1070-P121-G624X	DT3.16	TL25D/TR26D	SD1016	—
2070-P121-T900X	DT3.25	—	SD1025	KRS5-SS
2080-P121-T337	—	TR41D	SD1040	KRS6-SS
3080-P121-T338	DT3.40	TR61D/CLFT61D	—	—
4080-P121-T339	KDT2.60	TR81D/CLFT81D	—	KRS8-SS
1070-D123-G624X	T3.16DSK	—	—	*
2070-D123-T900X	T3.25DSK	CLFT26DV/TR26DV	DC0025	*
2080-D123-T337	—	CLFT41DV/TR41DV	—	*
3080-D123-T338	T3.40DSK	CLFT61DV/TR61DV	DC0040	*
4080-D123-T339	DVT2.60	CLFT81DV/TR81DV	DC0063	*

* 70 and 80 series units can also be used to replace ORION combination (2) pumps

APPLICATIONS

- Small printing presses
- Paper folders
- Carton formers
- Material handling equipment
- Collators
- Food processing equipment

Warranty

REGARDLESS OF CAUSE, if a product you buy from this brochure does not work right, Gast will repair or replace it once, at no charge, for up to one year from the date of shipment from the factory.

In the course of repair or replacement, Gast may send you written recommendations on how to prevent a problem from happening again. Gast reserves the right to withdraw this warranty if you do not follow these recommendations. Customer is responsible for freight charges both to and from Gast in all cases.

This warranty does not apply to electric motors, electrical controls, and gasoline engines, which Gast obtains from other manufacturers. A motor or engine carries only the warranty of the company that makes it.

THIS WARRANTY IS EXCLUSIVE AND IS IN LIEU OF ALL OTHER WARRANTIES, WHETHER WRITTEN, ORAL OR IMPLIED, INCLUDING THE WARRANTY OF MERCHANTABILITY AND OF FITNESS FOR ANY PARTICULAR PURPOSE. GAST'S LIABILITY IS IN ALL CASES LIMITED TO THE REPLACEMENT PRICE OF ITS PRODUCT. GAST SHALL NOT BE LIABLE FOR ANY OTHER DAMAGES, WHETHER CONSEQUENTIAL, INDIRECT, OR INCIDENTAL, ARISING FROM THE SALE OR USE OF ITS PRODUCTS.

Gast's sales personnel may modify this warranty, but only by signing a specific, written description of any modifications.

Motor Mounted Rotary Vane 14 and 20 cfm

GAST

Oilless 70 Series

PRESSURE

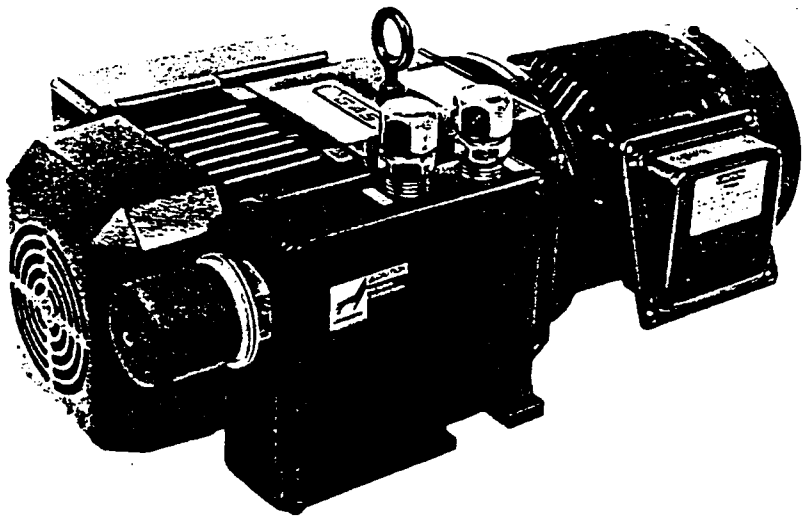

Unit pictured with optional plumbing and pressure regulator.

MODEL 1070 SERIES
15 PSI MAX. PRESSURE, 14 CFM OPEN FLOW

MODEL 2070 SERIES
15 PSI MAX. PRESSURE, 20 CFM OPEN FLOW

PRODUCT FEATURES

- Oilless operation
- Rugged construction/Low maintenance
- Low noise

INCLUDES

- Internal sound suppression
- Heavy duty internal filtration

RECOMMENDED ACCESSORIES

- Pressure regulator (AN225), metric version (AN225A)
- Pressure gauge (AA644B)
- Pressure relief valve (AA307)
- Complete repair kit K562
- Filter/Muffler kit K563

COMMON MOTOR OPTIONS AVAILABLE

- 100-110/200-240; 100-115/200-230; 50/60 Hz, single phase
- 110/220-240; 115/208-230; 50/60 Hz, single phase
- 200-240/200-230; 50/60 Hz, single phase
- 230/460; 60 Hz, three phase

Various brand name motors are used on any model at the discretion of Gast Manufacturing Corp.

Important Notice:

Pictorial and dimensional data is subject to change without notice.

Product Dimensions Metric (mm) U.S. Imperial (inches)

Top View

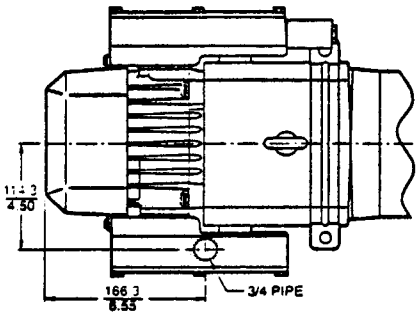

Side View

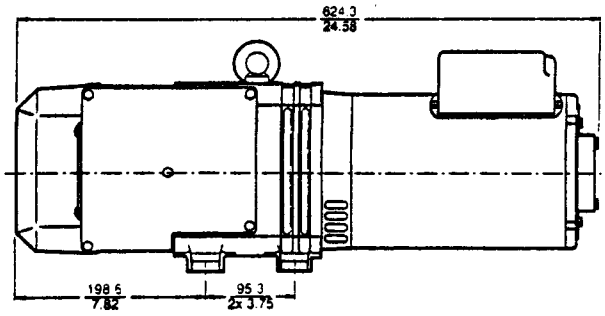

End View

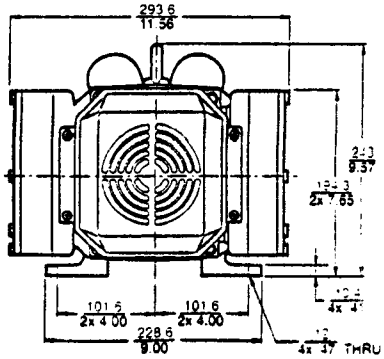

NOTE: Standard units are not drilled/tapped to include regulators/gauges. Consult factory for specific models.

Product Specifications

Model Number	Motor	RPM 60 Cycle	RPM 50 Cycle	HP	KW	Net Wt. Lbs.	Net Wt. kg
*1070-P121-G624X	100-110/200-240; 100-115/200-230; 50/60-1	1725	1425	1	0,75	100	45,4
*1070-P135-G561X	110/220-240; 115/208-230; 50/60-1	1725	1425	1	0,75	100	45,4
*2070-P121-T900X	200-240/200-230; 50/60-1	1725	1425	1 ½	1,12	100	45,4
*2070-P135-G475	230/460-60-3	1725	—	2	1,5	100	45,4

* 10 psi maximum performance
* High pressure models (15 psi)

*Product Performance (Metric, U.S. Imperial)

Black line on curve is for 60 cycle performance.
Colored line on curve is for 50 cycle performance.

1070

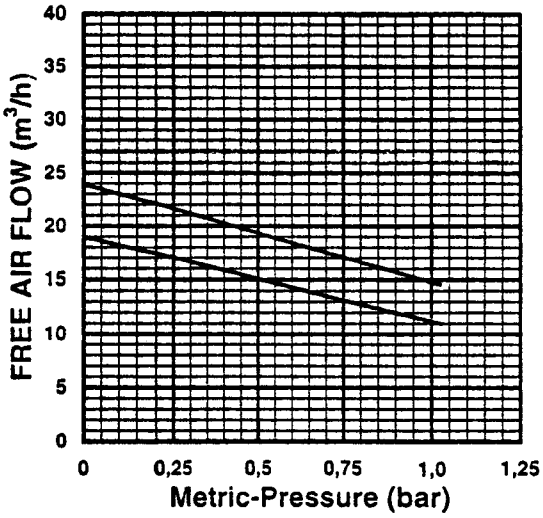

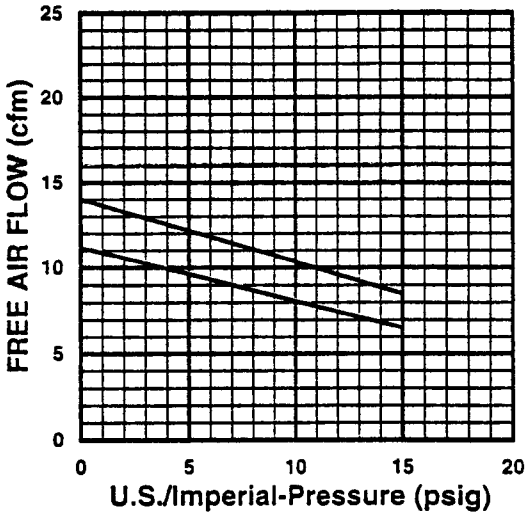

2070

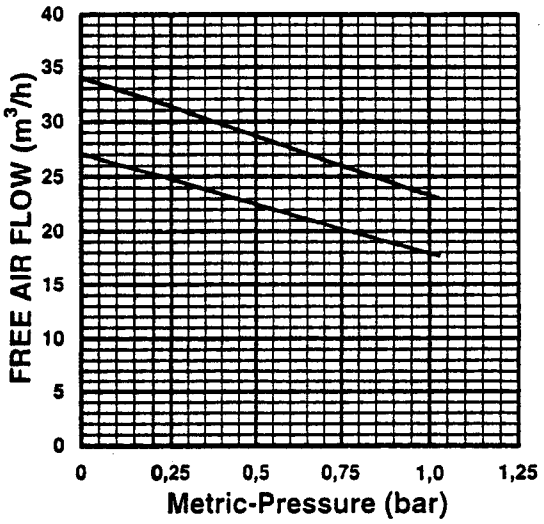

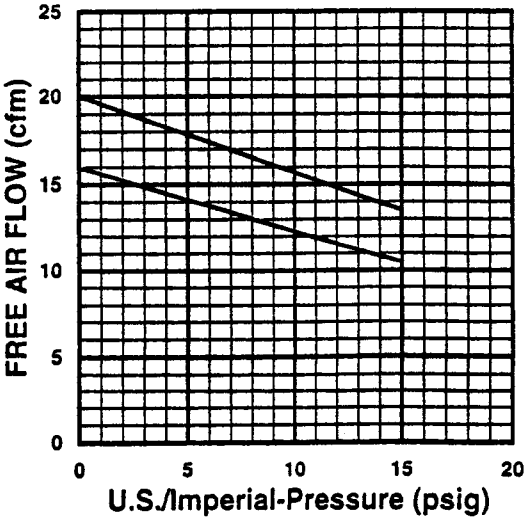

*Performance curves shown are without accessories. The addition of a regulator will decrease the maximum duty and flow. The amount of reduction will vary depending on the application and duty selected.

Oilless 70 Series

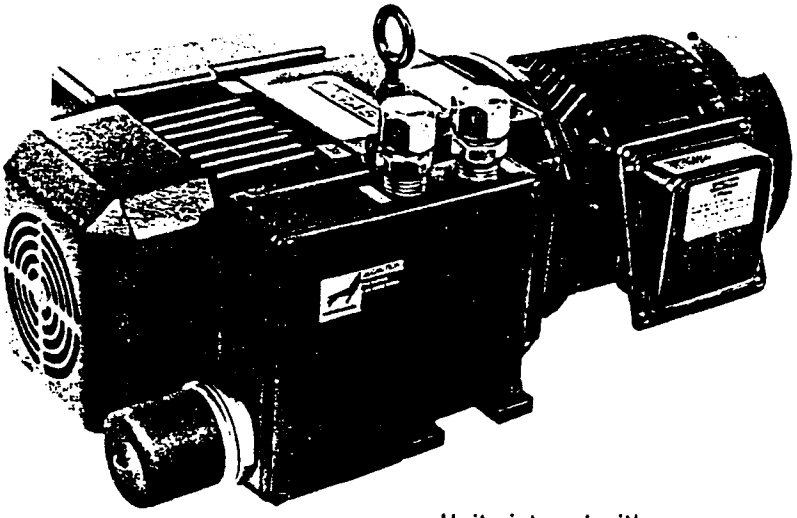

Unit pictured with optional plumbing and vacuum regulator.

MODEL 1070 SERIES
25" MAX. VAC., 14 CFM OPEN FLOW

MODEL 2070 SERIES
25" MAX. VAC., 20 CFM OPEN FLOW

PRODUCT FEATURES

- Oilless operation
- Rugged construction/Low maintenance
- Low noise

INCLUDES

- Internal sound suppression
- Heavy duty internal filtration

RECOMMENDED ACCESSORIES

- Vacuum regulator (AN226), metric version (AN226A)
- Vacuum gauge (AA640)
- Vacuum relief valve (AA308)
- Complete repair kit K560
- Filter/Muffler kit K561

COMMON MOTOR OPTIONS AVAILABLE

- 100-110/200-240; 100-115/200-230; 50/60 Hz, single phase
- 110/220-240; 115/208-230; 50/60 Hz, single phase
- 200-240/200-230; 50/60 Hz, single phase

Various brand name motors are used on any model at the discretion of Gast Manufacturing Corp.

Important Notice:

Pictorial and dimensional data is subject to change without notice.

Product Dimensions Metric (mm) U.S. Imperial (inches)

Top View

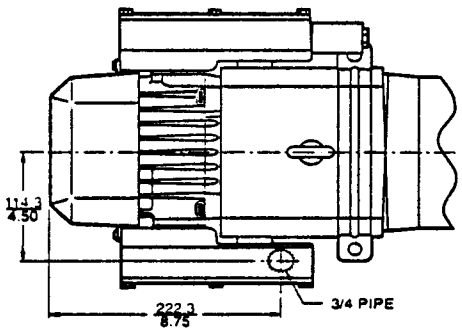

Side View

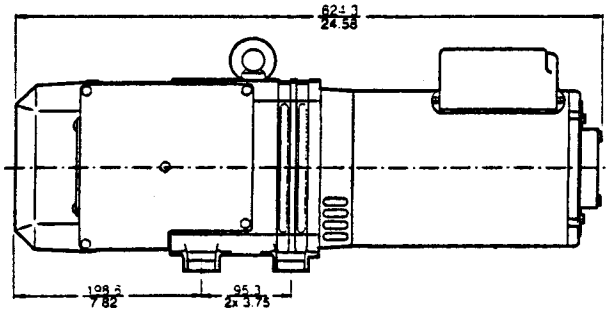

End View

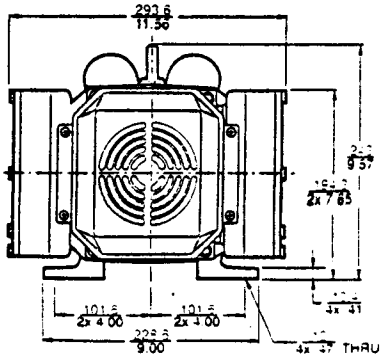

NOTE: Standard units are not drilled/tapped to include regulators/gauges. Consult factory for specific models.

Product Specifications

Model Number	Motor	RPM 60 Cycle	RPM 50 Cycle	HP	KW	Net Wt. Lbs.	Net Wt. kg
1070-V122-G624X	100-110/200-240; 100-115/200-230; 50/60-1	1725	1425	1	0,75	100	45,4
2070-V122-T900X	200-240/200-230; 50/60-1	1725	1425	1 ½	1,12	100	45,4
2070-V122-G561X	110/220-240; 115/208-230; 50/60-1	1725	1425	1	0,75	100	45,4

*Product Performance (Metric, U.S. Imperial)

Black line on curve is for 60 cycle performance.
Colored line on curve is for 50 cycle performance.

1070

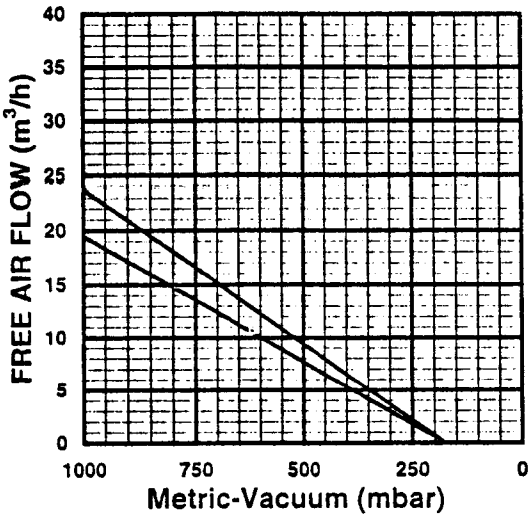

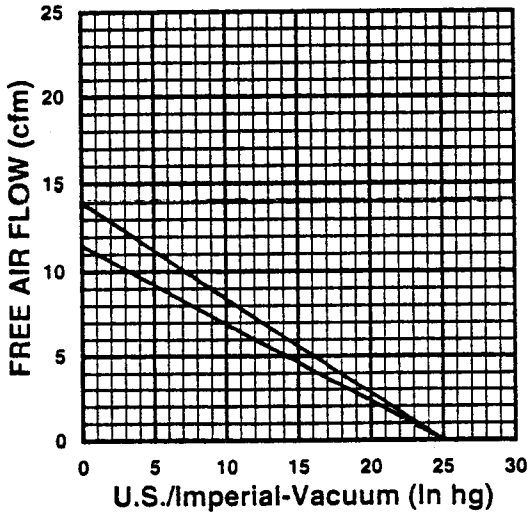

2070

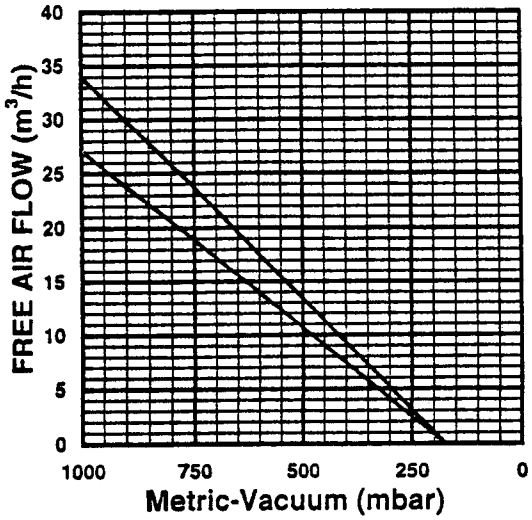

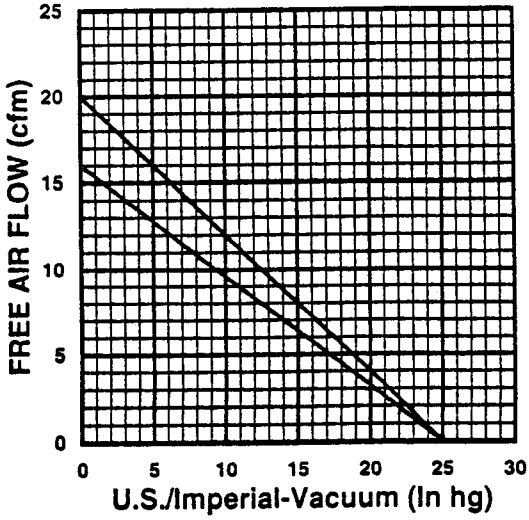

*Performance curves shown are without accessories. The addition of a regulator will decrease the maximum duty and flow. The amount of reduction will vary depending on the application and duty selected.

Leonard Utility Buildings: *Our Product*

When you look at a Leonard Building, the quality is obvious. But if you could see the way Leonards are constructed, you'd be just as impressed. Only top-grade materials are used. Under sturdy, plywood floors are foundation skids that have been Wolmanized® for insect and rot resistance.

Wood buildings have sub-roofs of plywood and quality fiberglass shingling. Their truss-type construction features the same kind of truss clips used in home construction. They're commercial-grade, assuring you of the strongest wood frame building on the market.

Steel frame buildings employ the uni-body construction techniques used by car manufacturers. Square steel frame components are welded together for maximum strength and rigidity.

Wherever possible, we use maintenance-free materials. On metal buildings, for example, you'll find heavy-gauge sheeting, with a baked enamel finish that won't crack, peel, or blister.

Other outstanding features include electric wiring, lights, and receptacles. From foundation to roof, Leonard Utility Buildings are built to give you years of dependable service.

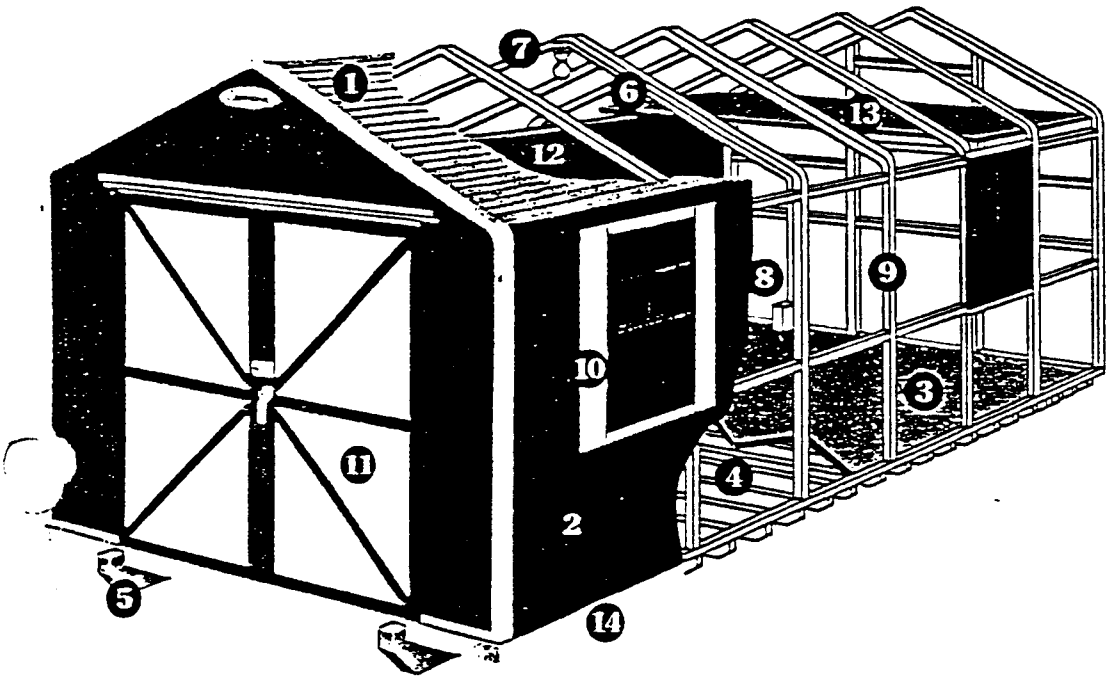

(1) Aluminum roof (2) Aluminum walls (3) ¾" underlayment plywood floor (4) 2" × 6" flooring supports, 16" on center (5) 4" × 8" Wolmanized® foundation skids (6) Electrical wiring (7) Light (8) Receptacle (9) 1" Welded galvanized square steel frame (10) Aluminum windows (11) Insulated aluminum door (12) Pegboard (13) Ceiling loft (14) Treated baseboard

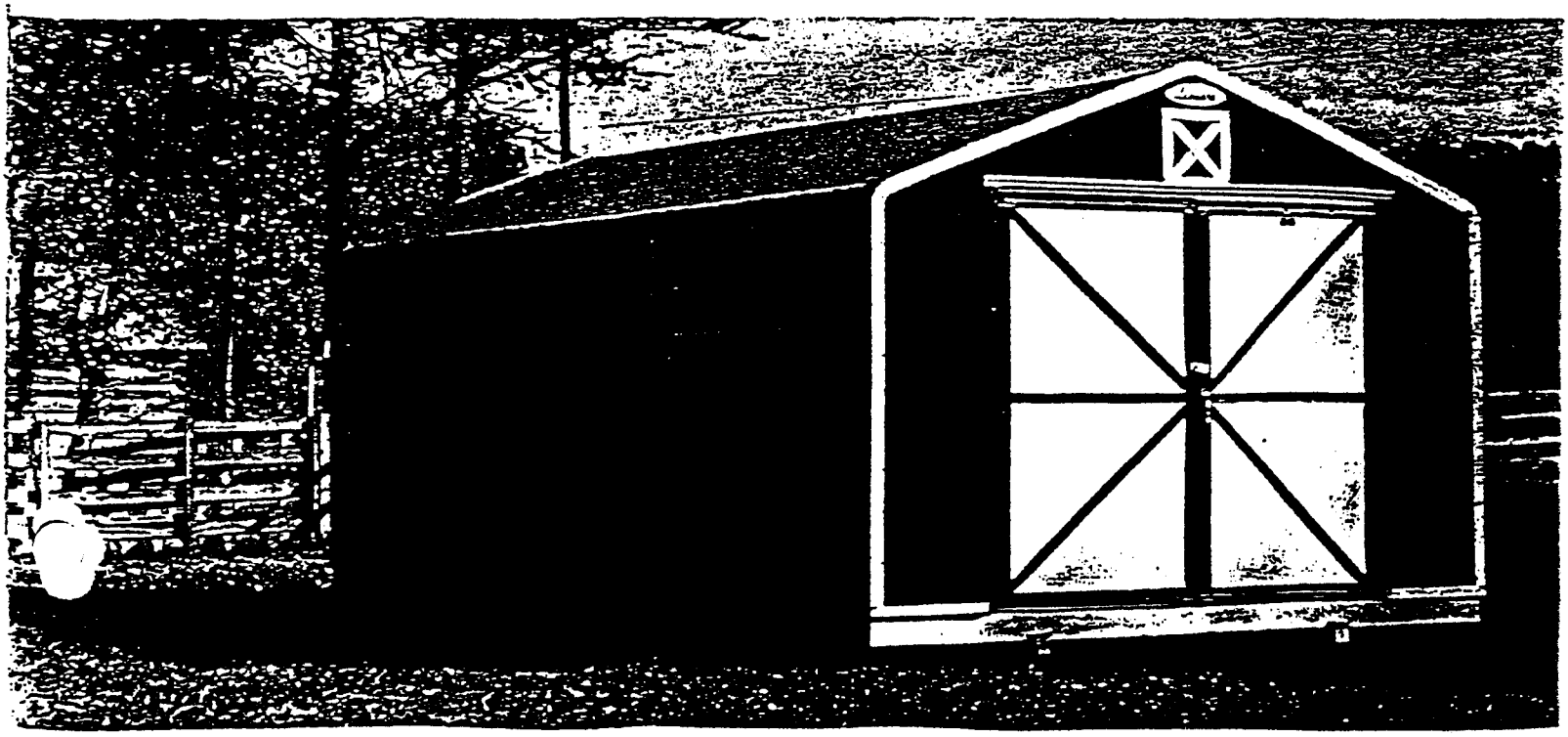

The Mache Steel Frame

Please read and save these instructions. Read carefully before attempting to assemble, install, operate or maintain the product described. Protect yourself and others by observing all safety information. Failure to comply with instructions could result in personal injury and/or property damage! Retain instructions for future reference.

Dayton® Hazardous Location Exhaust Fans

Description

Dayton hazardous location exhaust fans are used for air exhausting jobs in atmospheres containing flammable or explosive vapors or gases as defined under section 500 of the National Electrical Code (NEC). Each unit is equipped with a non-sparking, cast aluminum fan blade and a U.L. Listed Class I, Group D and Class II, Groups E, F and G, totally enclosed, hazardous location, ball bearing motor with automatic reset thermal protection.

NOTE: Model 3C772 is a 6-wing fan blade unit. All other models have 4-wing fan blades.

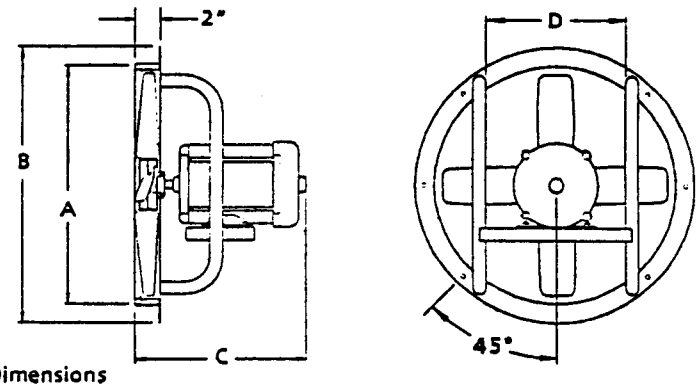

Figure 1 - Dimensions

Unpacking

1. When receiving the unit, inspect carefully for any damage that may have occurred during transit.
2. Shipping damage claim must be filed with carrier.

Dimensions

Model	A (Dia.)	B (Dia.)	C	D
4C020B	13 1/4"	16 1/4"	12 5/8"	7"
4C369A	17 1/4	20 1/4	13 7/8	11 1/4
4C370A	19 1/4	22 1/4	13 5/8	11 1/4
2C963B	21 1/4	24 1/4	13 1/2	11 1/4
2C856B	25 1/4	28 1/4	13 3/4	11 1/4
4C371A	25 1/4	28 1/4	13 7/8	11 1/4
3C772	30 1/2	33 1/2	15 1/8	11 1/4

Specifications

Model	Blade	CFM Air Delivery @ SP Shown Free Air	1/8"	Motor 1/4"	3/8"	HP	RPM	Full Load Amps
4C020B	12"	855	645	330	175	1/4	1725	4.5
4C369A	16	2000	1640	1260	750	1/4	1725	4.5
4C370A	18	2210	1810	1300	800	1/4	1725	4.5
2C963B	20	2475	1860	1350	850	1/4	1725	4.5
2C856B	24	3535	2520	1720	1000	1/3	1725	6.4
4C371A	24	4265	3320	2480	2200	1/2	1725	9.0/4.5 †
3C772	30	7135	6000	5000	3500	3/4	1140	9.6/4.8 †

Test data was obtained in a laboratory registered by AMCA for (AMCA 210 air performance) testing. Data is not certified by AMCA.

(†) Full load amps 115/230 voltage.

General Safety Information

⚠WARNING ***Disconnect power source before installing or servicing. Failure to disconnect power source can result in fire, shock or serious injury.***

1. This fan should be installed by a qualified technician.
2. Follow all local electrical and safety codes, as the National Electrical Code (NEC) and the Occupational Safety and Health Act (OSHA).
3. Motor must be securely and adequately grounded. This can be accomplished by wiring with a grounded, metal-clad raceway system, by using a separate ground wire connected to the bare metal of the motor frame, or other suitable means.

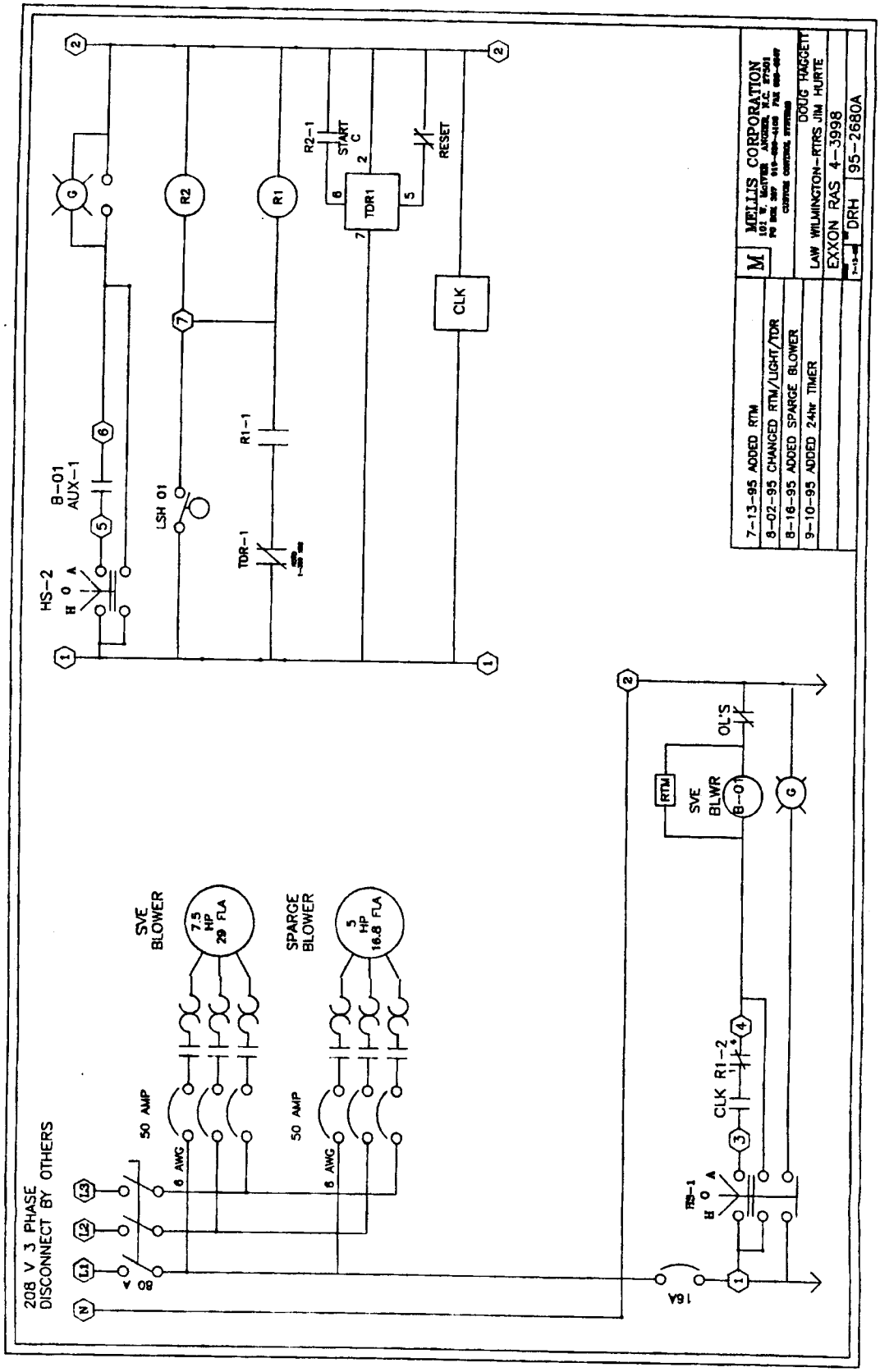
208 V 3 PHASE
DISCONNECT BY OTHERS
80 A
L1
L2
L3
N
50 AMP
6 AWG
SVE BLOWER
7.5 HP 29 FLA
SPARGE BLOWER
5 HP 16.8 FLA
16A
HS-1
CLK R1-2
RTM
SVE BLWR B-01
OL'S
G
HS-2
B-01 AUX-1
LSH 01
TDR-1
R1-1
R1
R2
R2-1
START C
TDR1
RESET
CLK
7-13-95 ADDED RTM
8-02-95 CHANGED RTM/LIGHT/TDR
8-16-95 ADDED SPARGE BLOWER
9-10-95 ADDED 24hr TIMER
MELLIS CORPORATION
DOUG HAGGETT
LAW WILMINGTON-RTRS JIM HURTE
EXXON RAS 4-3998
DRH
95-2680A

NOTES:
1. ALL CONDUIT ENTERING THE BUILDING WILL HAVE SEAL-OFFS LOCATED 6" BENEATH THE CONTROL PANEL EXTERNAL TO THE BUILDING.
2. ALL RIGID CONDUIT WILL BE 3/4" RIGID.
3. FLEXIBLE CONDUIT WILL BE USED TO CONNECT TO SOLENOID VALVE AND LEVEL FLOATS.
4. WIRE SIZES WILL BE IN ACCORDANCE WITH NEC AND LOCAL CODE.
5. THE INSIDE OF THE BUILDING IS CLASSIFIED AS A CLASS I DIVISION II AREA PER NEC.
6. THE POWER DELIVERED TO THE PANEL SHALL BE THREE PHASE, 208V, 60 Hz.

(1) CONTROL PANEL
(2) O-Z GEDNEY MODEL VX2001GGP VAPOR TIGHT LIGHT
(3) NEW YORK BLOWER MODEL EN102-H VENTILATION FAN
(4) UNIVERSAL SILENCER MODEL VI-4 MOISTURE SEPARATOR
(5) DWYER L8 LEVEL FLOATS
(6) ASCO MODEL EF8210G15 SOLENOID VALVE
(7) SWITCHES
(8) 7.5 HP 208V, THREE PHASE, 60 Hz BLOWER MOTOR
(9) 3/4" RIGID CONDUIT
(10) 3/4" FLEX CONDUIT
(11) GAST MODEL 3060-P121-T338, 5 HP, 208V, 3 PHASE, 60 Hz

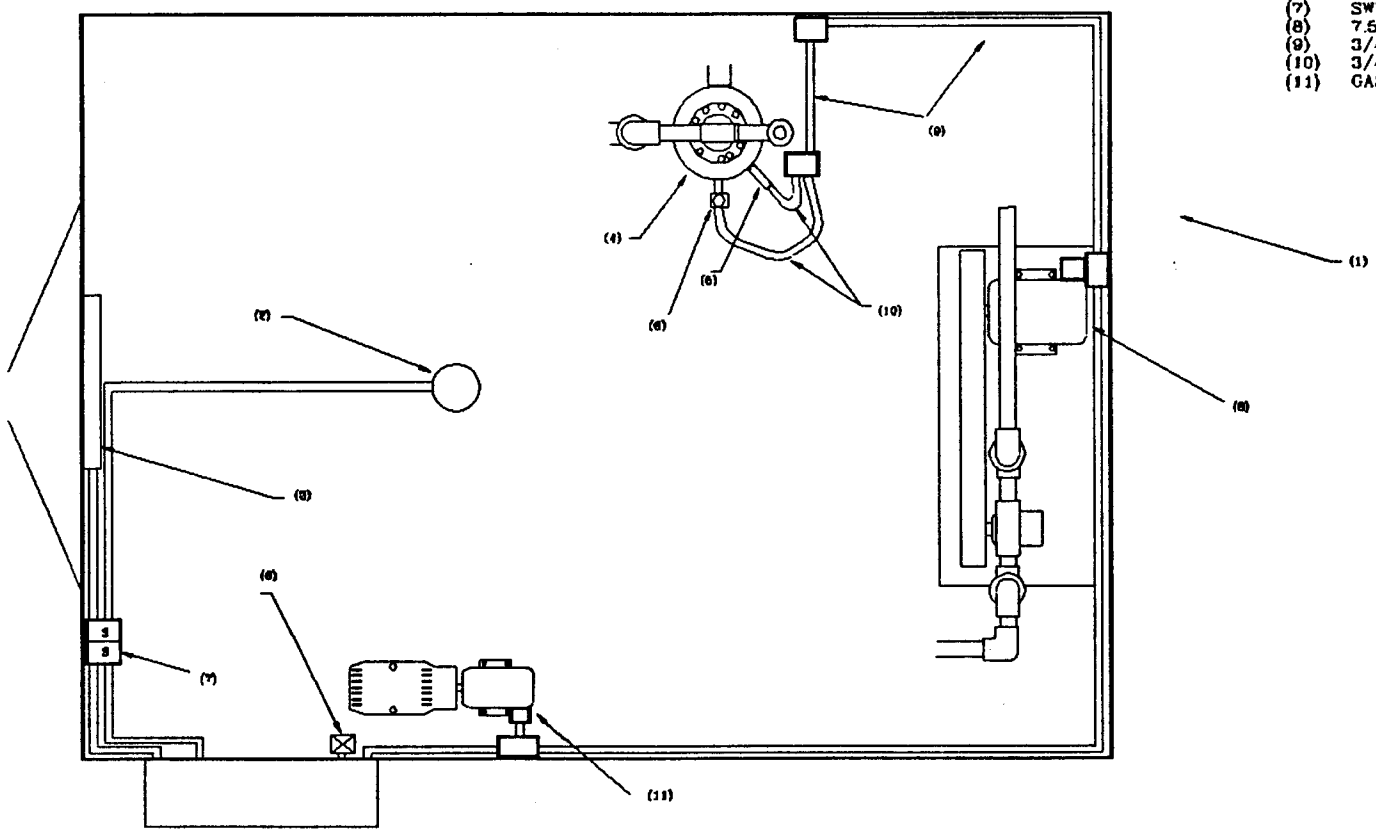

RTRS, INC.
116 Southside Drive
Charlotte, NC 28217
(704) 527-3227
Fax (704) 522-8892

CUSTOMER: EXXON COMPANY, USA

Title: EXXON-RAS#4-3998, 4701 WEST MARKET STREET, GREENSBORO, NC

Drawn By:	Approved By:	Date:	Scale	Drawing Number	Revision Date	Revision	Page
RM		6/1/95		448-2			1 of 1

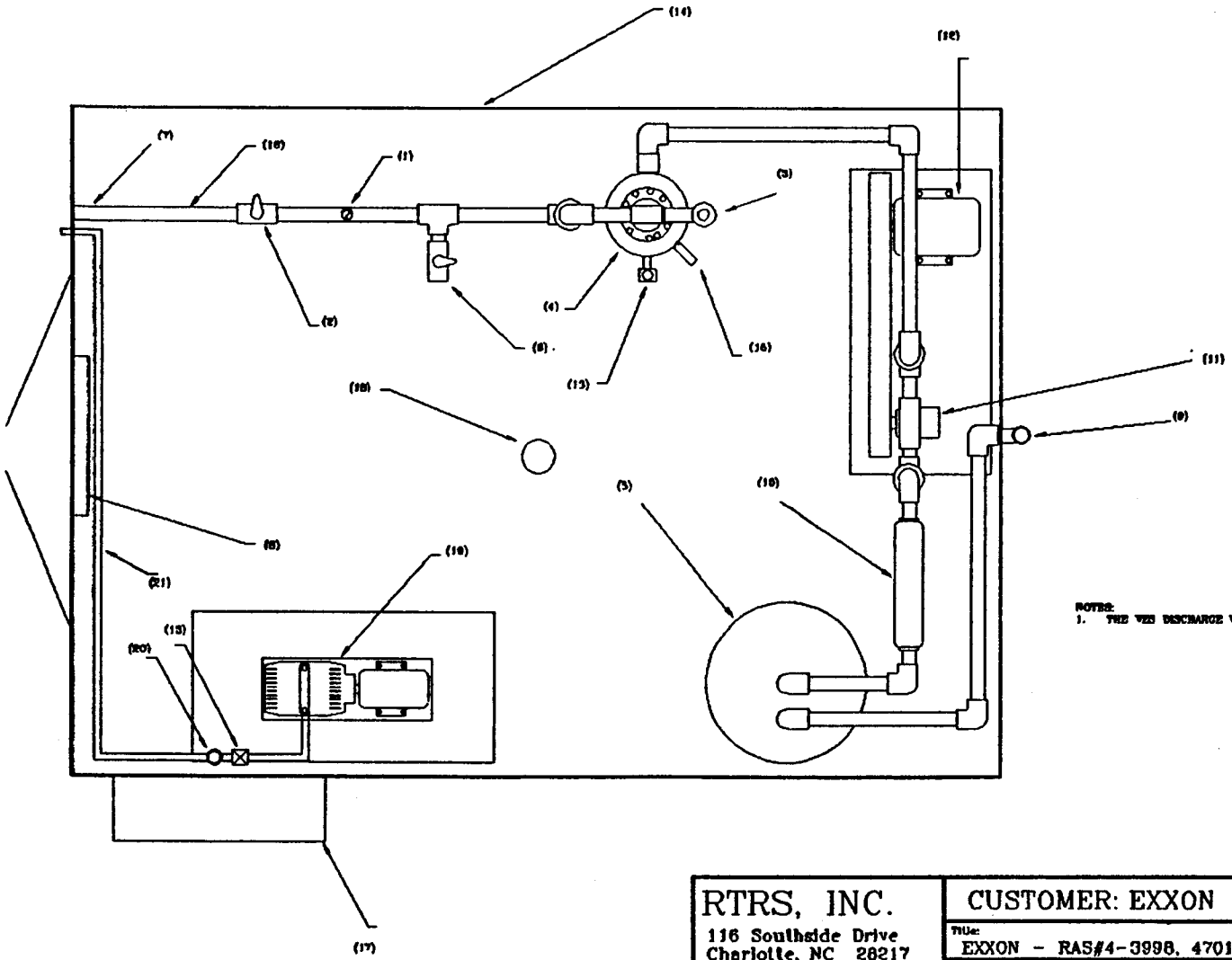

(1) ASHCROFT LIQUID FILLED VACUUM GAUGE
(2) 2" SCHEDULE 80 BALL VALVE
(3) KUNKLE RELIEF VALVE MODEL 2168
(4) UNIVERSAL MOISTURE SEPARATOR MODEL VI-4
(5) VAPOR PHASE CARBON DRUM
(6) 2" SCHEDULE 80 AIR DILUTION VALVE
(7) SYSTEM INLET
(8) NEW YORK BLOWER MODEL EN102-H VENTILATION FAN
(9) SYSTEM DISCHARGE
(10) UNIVERSAL SILENCER MODEL URBV-2 DISCHARGE SILENCER
(11) ROOTS URAI 60 POSITIVE DISPLACEMENT BLOWER
(12) 7.5 HP, 208V, THREE PHASE, 60 Hz MOTOR
(13) ASCO EF8210G15 SOLENOID VALVE
(14) 8' X 10' CONVINCER SEIRES LEONARD BUILDING
(15) DWYER L8 LEVEL FLOAT
(16) 2" PVC SCHEDULE 80 PIPE
(17) CONTROL PANEL
(18) D-Z GEDNEY MODEL VX2001GCP VAPOR TIGHT LIGHT
(19) GAST AIR COMPRESSOR MODEL 3080-P121-T338
(20) WILKERSON REGULATOR
(21) DURAPLUS 1" AIR LINE

NOTES:
1. THE VES DISCHARGE WILL EXTEND 2' ABOVE THE ROOF LINE. PAINTED BLACK.

RTRS, INC.
116 Southside Drive
Charlotte, NC 28217
(704) 527-3227
Fax (704) 522-8892

CUSTOMER: EXXON COMPANY, USA

Title: EXXON - RAS#4-3998, 4701 WEST MARKET STREET, GREENSBORO, NC

Drawn By:	Approved By:	Date:	Scale:	Drawing Number	Revision Date	Revision	Page
RM		6/1/95		448-1			1 of [illegible]