JOHNSTON COUNTY, NORTH CAROLINA
DEPARTMENT OF PUBLIC UTILITIES

JOHNSTON COUNTY MSW LANDFILL
PHASE 4A - CELL 3
PERMIT AMENDMENT DRAWINGS

JUNE 2007
REVISED: DECEMBER 2008

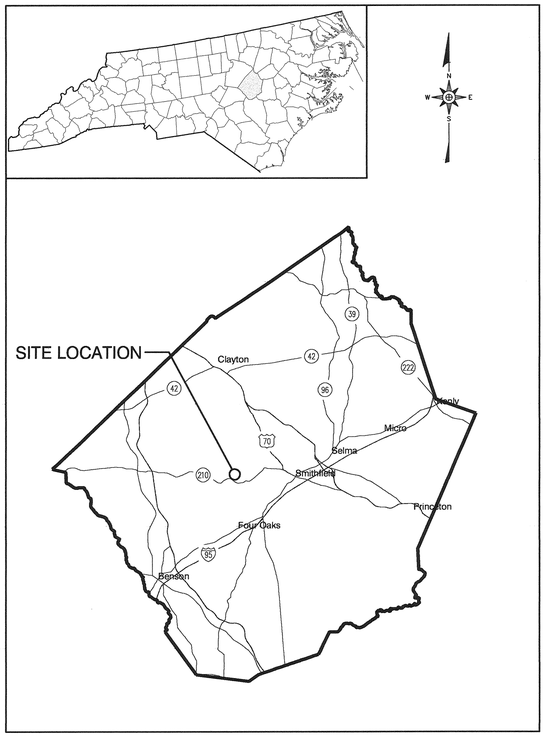

SITE LOCATION MAP
NOT TO SCALE

SHEET NO.	DRAWING NO.	DRAWING TITLE	REVISION
1		TITLE - COVER SHEET	1
2	S1	EXISTING CONDITIONS	1
3	S2	CELL 3 SUBGRADE GRADING PLAN	1
4	S3	CELL 3 PROTECTIVE COVER GRADING AND DRAINAGE PLAN	1
5	S4	LEACHATE MANAGEMENT SYSTEMS LEAK DETECTION PIPING	1
6	S5	LEACHATE MANAGEMENT SYSTEMS LEACHATE COLLECTION PIPING	1
7	L1	LINER AND BERM DETAILS (SHEET 1 OF 2)	1
8	L2	LINER AND BERM DETAILS (SHEET 2 OF 2)	1
9	LM1	LEACHATE MANAGEMENT SYSTEM DETAILS (SHEET 1 OF 2)	1
10	LM2	LEACHATE MANAGEMENT SYSTEM DETAILS (SHEET 2 OF 2)	1
11	EC1	EROSION AND SEDIMENTATION DETAILS (SHEET 1 OF 2)	
12	EC2	EROSION AND SEDIMENTATION DETAILS (SHEET 2 OF 2)	
13	FC1	PHASE 4A FINAL COVER GRADING AND DRAINAGE PLAN	1
14	FC2	FINAL COVER DETAILS (SHEET 1 OF 2)	
15	FC3	FINAL COVER DETAILS (SHEET 2 OF 2)	1
16	LFG1	CELL 3 LANDFILL GAS MANAGEMENT SYSTEM	1
17	LFG2	LANDFILL GAS MANAGEMENT DETAILS (SHEET 1 OF 3)	
18	LFG3	LANDFILL GAS MANAGEMENT DETAILS (SHEET 2 OF 3)	
19	LFG4	LANDFILL GAS MANAGEMENT DETAILS (SHEET 3 OF 3)	
20	EX1	ENGINEERING CROSS SECTIONS (SHEET 1 OF 2)	1
21	EX2	ENGINEERING CROSS SECTIONS (SHEET 2 OF 2)	1
22	P1	MSW LANDFILL PHASING PLAN (SHEET 1 OF 3)	1
23	P2	MSW LANDFILL PHASING PLAN (SHEET 2 OF 3)	1
24	P3	MSW LANDFILL PHASING PLAN (SHEET 3 OF 3)	1
25	P4	C&D LANDFILL PHASING PLAN	1

STANDARD SECTION LOCATION CALLOUT (SHEET AND DETAIL)

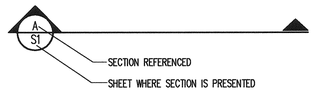

STANDARD DETAIL CALLOUT

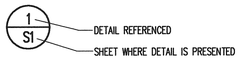

STANDARD DETAIL LABEL AND CALLOUT

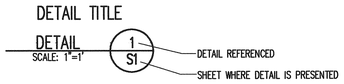

STANDARD REVISION CALLOUT (SHEET AND DETAIL)

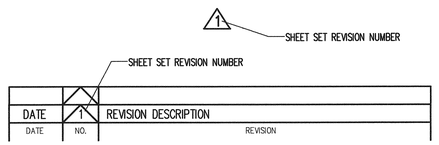

RICHARDSON SMITH GARDNER & ASSOCIATES
Engineering and Geological Services
14 N. Boylan Ave.
Raleigh, N.C. 27603
www.rsgengineers.com
ph: 919-828-0577
fax: 919-828-3899

FILE NAME
JOHN-D0479A

G:\CAD\Johnston\John 07-2\rev 102108\sheets\JOHN-D0479A.dwg - 12/4/2008 1:17 PM

PARCEL REFERENCES	
PARCEL	COUNTY DEED BOOK REFERENCE
1	D.B. 775, PG. 410
2	D.B. 952, PG. 376
3	D.B. 763, PG. 525
4	D.B. 1228, PG. 652
5	D.B. 1215, PG. 747
6	D.B. E-3, PG. 1

NOTE:
PROPERTY INFORMATION FROM "MAP FOR JOHNSTON COUNTY" PREPARED BY L. DENNIS LEE, P.A., SMITHFIELD, NC, DATED MARCH 22, 1994, AS REVISED THROUGH JANUARY 30, 1995 (COUNTY PLAT BOOK 59, PAGE 437) AND COUNTY REGISTER OF DEEDS OFFICE.

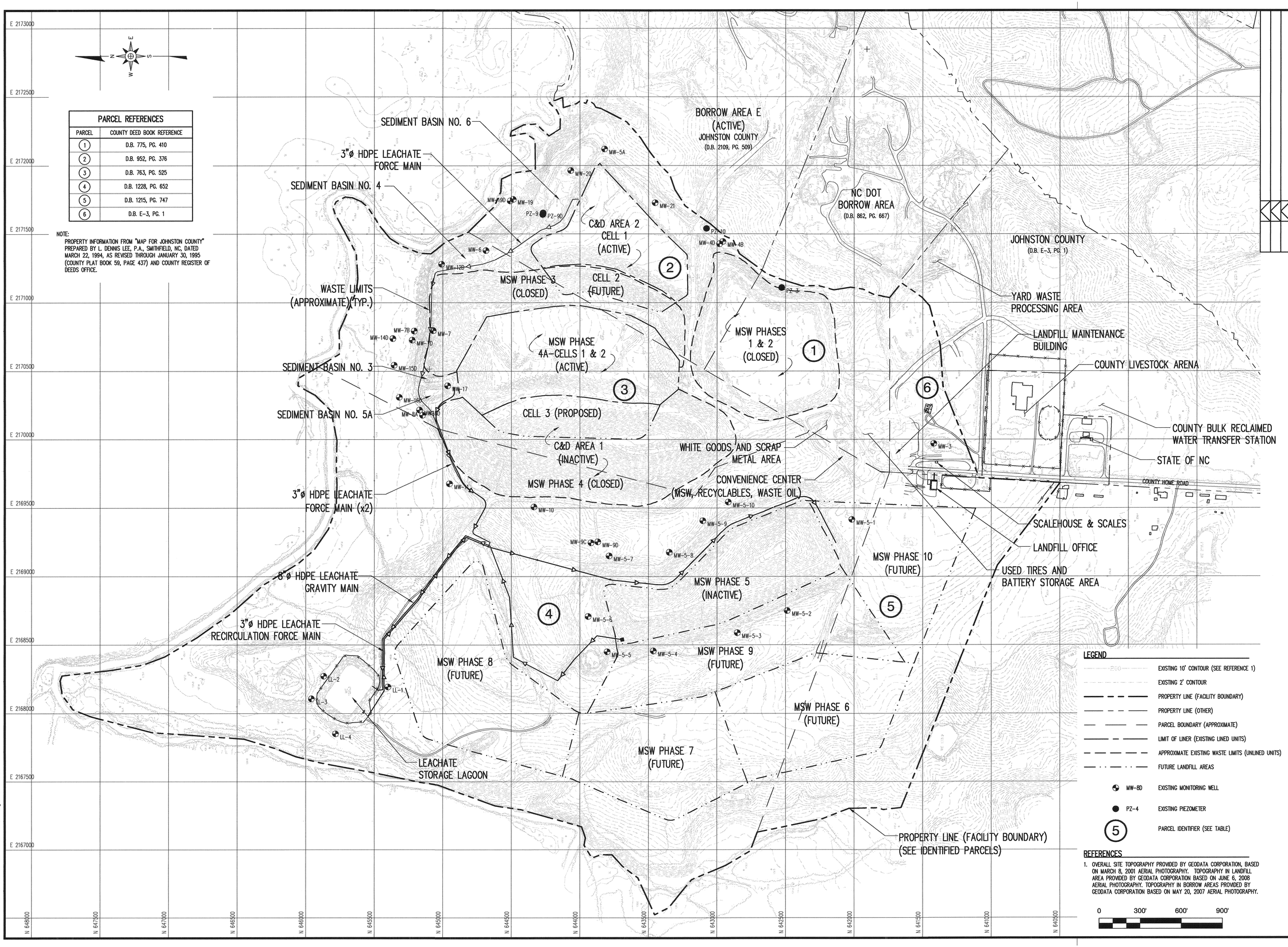

LEGEND

- EXISTING 10' CONTOUR (SEE REFERENCE 1)
- EXISTING 2' CONTOUR
- PROPERTY LINE (FACILITY BOUNDARY)
- PROPERTY LINE (OTHER)
- PARCEL BOUNDARY (APPROXIMATE)
- LIMIT OF LINER (EXISTING LINED UNITS)
- APPROXIMATE EXISTING WASTE LIMITS (UNLINED UNITS)
- FUTURE LANDFILL AREAS
- MW-8D EXISTING MONITORING WELL
- PZ-4 EXISTING PIEZOMETER
- (5) PARCEL IDENTIFIER (SEE TABLE)

REFERENCES

1. OVERALL SITE TOPOGRAPHY PROVIDED BY GEODATA CORPORATION, BASED ON MARCH 8, 2001 AERIAL PHOTOGRAPHY. TOPOGRAPHY IN LANDFILL AREA PROVIDED BY GEODATA CORPORATION BASED ON JUNE 6, 2008 AERIAL PHOTOGRAPHY. TOPOGRAPHY IN BORROW AREAS PROVIDED BY GEODATA CORPORATION BASED ON MAY 20, 2007 AERIAL PHOTOGRAPHY.

0 300' 600' 900'

DATE	NO.	REVISION
11/08	1	RESPONSE TO NCDENR COMMENTS AND ADDITIONAL CHANGES

RICHARDSON SMITH GARDNER & ASSOCIATES
Engineering and Geological Services
14 N. Boylan Ave.
Raleigh, N.C. 27603
ph: 919-828-0577
fax: 919-828-3899
www.rsgengineers.com

SEAL

PROJECT TITLE:
JOHNSTON COUNTY MSW LANDFILL
PHASE 4A - CELL 3
PERMIT AMENDMENT DRAWINGS

DRAWING TITLE:
EXISTING CONDITIONS

DESIGNED BY:	DRAWN BY:
P.K.S.	J.A.L.
CHECKED BY:	PROJECT NO.: JOHN 07-2
SCALE: AS SHOWN	DATE: JUNE 2007
FILE NAME: JOHN-D0480A	
SHEET NO. 2	DRAWING NO. S1

G:\CAD\Johnston\John 07-2\rev 102108\sheets\JOHN-D0480A.dwg - 12/4/2008 2:47 PM

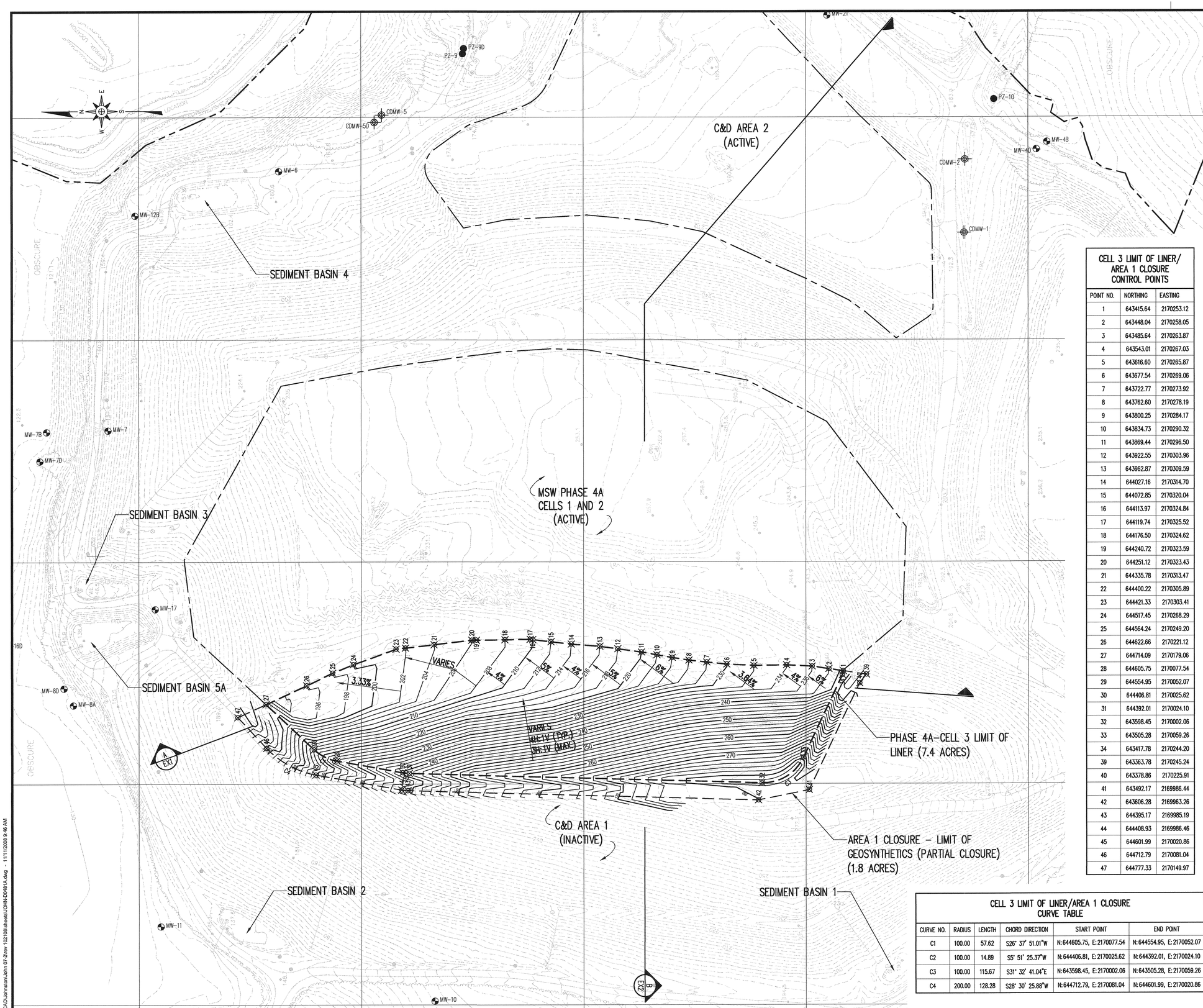

CELL 3 LIMIT OF LINER/ AREA 1 CLOSURE CONTROL POINTS

POINT NO.	NORTHING	EASTING
1	643415.64	2170253.12
2	643448.04	2170258.05
3	643485.64	2170263.87
4	643543.01	2170267.03
5	643616.60	2170265.87
6	643677.54	2170269.06
7	643722.77	2170273.92
8	643762.60	2170278.19
9	643800.25	2170284.17
10	643834.73	2170290.32
11	643869.44	2170296.50
12	643922.55	2170303.96
13	643962.87	2170309.59
14	644027.16	2170314.70
15	644072.85	2170320.04
16	644113.97	2170324.84
17	644119.74	2170325.52
18	644176.50	2170324.62
19	644240.72	2170323.59
20	644251.12	2170323.43
21	644335.78	2170313.47
22	644400.22	2170305.89
23	644421.33	2170303.41
24	644517.45	2170268.29
25	644564.24	2170249.20
26	644622.66	2170221.12
27	644714.09	2170179.06
28	644605.75	2170077.54
29	644554.95	2170052.07
30	644406.81	2170025.62
31	644392.01	2170024.10
32	643598.45	2170002.06
33	643505.28	2170059.26
34	643417.78	2170244.20
39	643363.78	2170245.24
40	643378.86	2170225.91
41	643492.17	2169986.44
42	643606.28	2169963.26
43	644395.17	2169985.19
44	644408.93	2169986.46
45	644601.99	2170020.86
46	644712.79	2170081.04
47	644777.33	2170149.97

CELL 3 LIMIT OF LINER/AREA 1 CLOSURE CURVE TABLE

CURVE NO.	RADIUS	LENGTH	CHORD DIRECTION	START POINT	END POINT
C1	100.00	57.62	S26° 37' 51.01"W	N:644605.75, E:2170077.54	N:644554.95, E:2170052.07
C2	100.00	14.89	S5° 51' 25.37"W	N:644406.81, E:2170025.62	N:644392.01, E:2170024.10
C3	100.00	115.67	S31° 32' 41.04"E	N:643598.45, E:2170002.06	N:643505.28, E:2170059.26
C4	200.00	128.28	S28° 30' 25.88"W	N:644712.79, E:2170081.04	N:644601.99, E:2170020.86

LEGEND

- EXISTING 10' CONTOUR (SEE REFERENCE 1)
- EXISTING 2' CONTOUR
- APPROXIMATE PROPERTY LINE
- LIMITS OF EXISTING LINER
- CELL 3 LIMIT OF LINER
- AREA 1 CLOSURE - LIMIT OF GEOSYNTHETICS
- PROPOSED 10' CONTOUR (SEE NOTE 1)
- PROPOSED 2' CONTOUR
- EXISTING MONITORING WELL
- EXISTING PIEZOMETER
- MONITORING WELL FOR C&D LANDFILL (UNSURVEYED LOCATION)
- CONTROL POINT (SEE TABLE)

NOTES

1. GRADES SHOWN REPRESENT TOP OF SUBGRADE.

REFERENCES

1. OVERALL SITE TOPOGRAPHY PROVIDED BY GEODATA CORPORATION, BASED ON JUNE 6, 2008.

GENERAL EROSION AND SEDIMENTATION CONTROL NOTES

1. ALL EROSION AND SEDIMENTATION CONTROL WORK SHALL BE IN ACCORDANCE WITH THE LATEST EDITION OF THE NORTH CAROLINA EROSION AND SEDIMENT CONTROL PLANNING AND DESIGN MANUAL AS WELL AS APPLICABLE REGULATIONS.
2. EROSION AND SEDIMENTATION CONTROL MEASURES SHALL BE ESTABLISHED PRIOR TO, OR AS SOON AS PRACTICAL THEREAFTER, ANY LAND CLEARING OR CONSTRUCTION ACTIVITIES MAY BEGIN.
3. ALL EROSION AND SEDIMENTATION CONTROL MEASURES SHALL BE CONSTRUCTED ACCORDING TO THE CONTRACT DRAWINGS AND SPECIFICATIONS.
4. ALL EROSION AND SEDIMENTATION CONTROL MEASURES SHALL BE INSPECTED AT LEAST ONCE EVERY SEVEN CALENDAR DAYS AND WITHIN 24 HOURS AFTER ANY STORM EVENT OF GREATER THAN 0.5 INCHES OF RAIN PER 24 HOUR PERIOD AND APPROPRIATE MAINTENANCE CONDUCTED. MAINTENANCE SHALL INCLUDE, BUT NOT BE LIMITED TO:
   A. THE REMOVAL AND SATISFACTORY DISPOSAL OF TRAPPED OR DEPOSITED SEDIMENTS FROM BASINS, TRAPS, BARRIERS, FILTERS, AND/OR DRAINAGE FEATURES/DEVICES;
   B. REPLACEMENT OF FILTER FABRICS USED FOR SILT FENCES UPON LOSS OF EFFICIENCY; AND
   C. REPLACEMENT OF ANY OTHER COMPONENTS WHICH ARE DAMAGED OR CANNOT SERVE THE INTENDED USE.
5. THE CONTRACTOR SHALL PROVIDE TEMPORARY OR PERMANENT GROUND COVER (OR OTHER ACCEPTABLE MEASURES) ADEQUATE TO RESTRAIN EROSION ON ERODIBLE SLOPES OR OTHER AREAS WITHIN 21 CALENDAR DAYS FOLLOWING COMPLETION OF ANY PHASE OF GRADING. THE CONTRACTOR SHALL PROVIDE PERMANENT GROUND COVER FOR ALL DISTURBED AREAS WITHIN 15 WORKING DAYS OR 90 CALENDER DAYS (WHICHEVER IS SHORTER) FOLLOWING THE COMPLETION OF CONSTRUCTION.

0 100' 200' 300'

DATE	NO.	REVISION
11/08	1	RESPONSE TO NCDENR COMMENTS AND ADDITIONAL CHANGES

RICHARDSON SMITH GARDNER & ASSOCIATES
Engineering and Geological Services
14 N. Boylan Ave.
Raleigh, N.C. 27603
ph: 919-828-0577
fax: 919-828-3899
www.rsgengineers.com

SEAL

SEAL

PROJECT TITLE:
JOHNSTON COUNTY MSW LANDFILL
PHASE 4A - CELL 3
PERMIT AMENDMENT DRAWINGS

DRAWING TITLE:
CELL 3 SUBGRADE
GRADING PLAN

DESIGNED BY: P.K.S.	DRAWN BY: J.A.L.
CHECKED BY:	PROJECT NO.: JOHN 07-2
SCALE: AS SHOWN	DATE: JUNE 2007
FILE NAME: JOHN-D0481A	
SHEET NO. 3	DRAWING NO. S2

G:\CADJohnston\John 07-2\rev 102108\sheets\JOHN-D0481A.dwg - 11/11/2008 9:46 AM

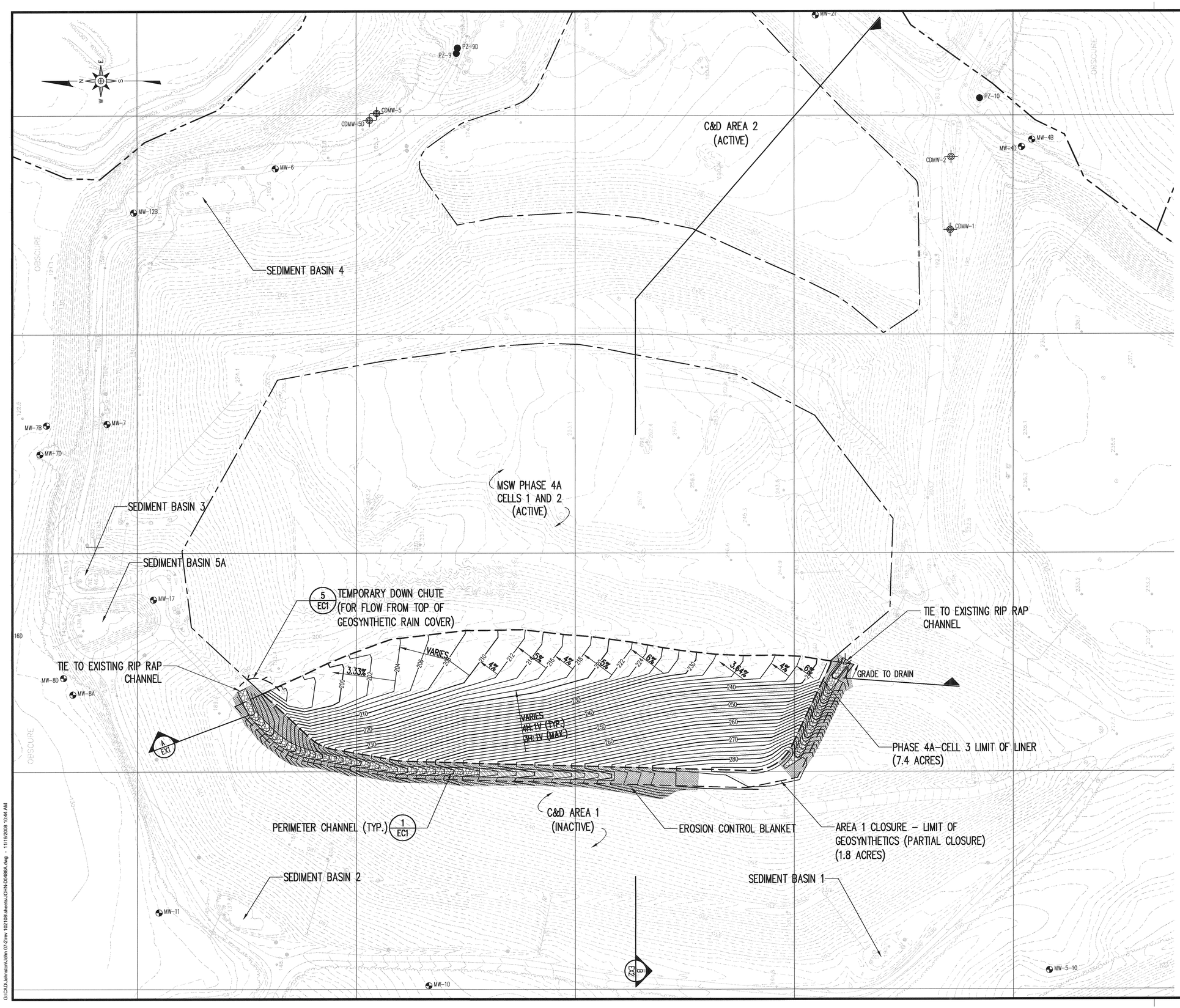

LEGEND

- EXISTING 10' CONTOUR (SEE REFERENCE 1)
- EXISTING 2' CONTOUR
- APPROXIMATE PROPERTY LINE
- LIMITS OF EXISTING LINER
- CELL 3 LIMIT OF LINER
- AREA 1 CLOSURE – LIMIT OF GEOSYNTHETICS
- PROPOSED 10' CONTOUR (SEE NOTE 1)
- PROPOSED 2' CONTOUR
- EXISTING MONITORING WELL
- EXISTING PIEZOMETER
- MONITORING WELL FOR C&D LANDFILL (UNSURVEYED LOCATION)
- EROSION CONTROL BLANKET (ECB)
- TURF REINFORCEMENT MATTING (TRM)
- RIP RAP

NOTES

1. GRADES SHOWN REPRESENT TOP OF PROTECTIVE COVER.
2. REFER TO THE DETAILS FOR PROPER TIE-IN OF LINER SYSTEM AND PROTECTIVE COVER AROUND THE PERIMETER OF CELL 3.

REFERENCES

1. OVERALL SITE TOPOGRAPHY PROVIDED BY GEODATA CORPORATION, BASED ON JUNE 6, 2008.

0 100' 200' 300'

DATE	NO.	REVISION
11/08	1	RESPONSE TO NCDENR COMMENTS AND ADDITIONAL CHANGES

RICHARDSON SMITH GARDNER & ASSOCIATES
Engineering and Geological Services
14 N. Boylan Ave.
Raleigh, N.C. 27603
ph: 919-828-0577
fax: 919-828-3899
www.rsgengineers.com

SEAL

SEAL

PROJECT TITLE:
JOHNSTON COUNTY MSW LANDFILL
PHASE 4A - CELL 3
PERMIT AMENDMENT DRAWINGS

DRAWING TITLE:
CELL 3
PROTECTIVE COVER GRADING
AND DRAINAGE PLAN

DESIGNED BY: P.K.S.	DRAWN BY: J.A.L.
CHECKED BY:	PROJECT NO.: JOHN 07-2
SCALE: AS SHOWN	DATE: JUNE 2007
FILE NAME: JOHN-D0488A	
SHEET NO. 4	DRAWING NO. S3

G:\CAD\Johnston\John 07-2\rev 102108\sheets\JOHN-D0488A.dwg - 11/18/2008 10:44 AM

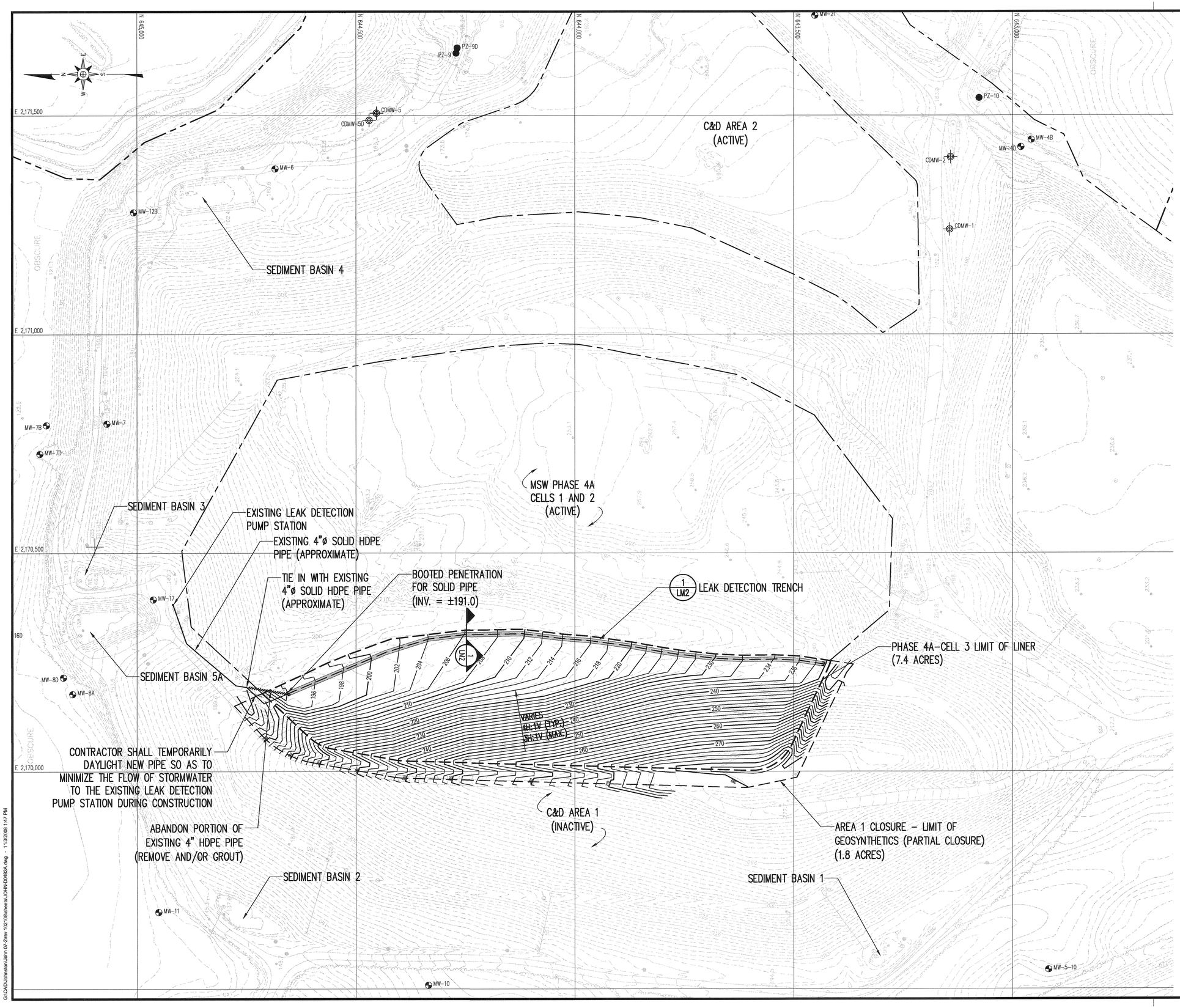

LEGEND

- EXISTING 10' CONTOUR (SEE REFERENCE 1)
- EXISTING 2' CONTOUR
- APPROXIMATE PROPERTY LINE
- LIMITS OF EXISTING LINER
- CELL 3 LIMIT OF LINER
- AREA 1 CLOSURE – LIMIT OF GEOSYNTHETICS
- PROPOSED 10' CONTOUR (SEE NOTE 1)
- PROPOSED 2' CONTOUR
- PERFORATED PIPING/STONE TRENCH
- SOLID PIPING
- EXISTING MONITORING WELL
- EXISTING PIEZOMETER
- MONITORING WELL FOR C&D LANDFILL (UNSURVEYED LOCATION)

NOTES

1. GRADES SHOWN REPRESENT TOP OF SUBGRADE.

REFERENCES

1. OVERALL SITE TOPOGRAPHY PROVIDED BY GEODATA CORPORATION, BASED ON JUNE 6, 2008.

0 100' 200' 300'

NO.	DATE	REVISION
1	11/08	RESPONSE TO NCDENR COMMENTS AND ADDITIONAL CHANGES

RICHARDSON SMITH GARDNER & ASSOCIATES
Engineering and Geological Services
14 N. Boylan Ave.
Raleigh, N.C. 27603
ph: 919-828-0577
fax: 919-828-3899
www.rsgengineers.com

SEAL

PROJECT TITLE: JOHNSTON COUNTY MSW LANDFILL
PHASE 4A - CELL 3
PERMIT AMENDMENT DRAWINGS

DRAWING TITLE: LEACHATE MANAGEMENT SYSTEMS
LEAK DETECTION PIPING

DESIGNED BY: P.K.S.	DRAWN BY: J.A.L.
CHECKED BY:	PROJECT NO.: JOHN 07-2
SCALE: AS SHOWN	DATE: JUNE 2007
FILE NAME: JOHN-D0483A	
SHEET NO. 5	DRAWING NO. S4

G:\CAD\Johnston\John 07-2\rev 10210ffc\sheets\JOHN-D0483A.dwg - 11/3/2008 1:47 PM

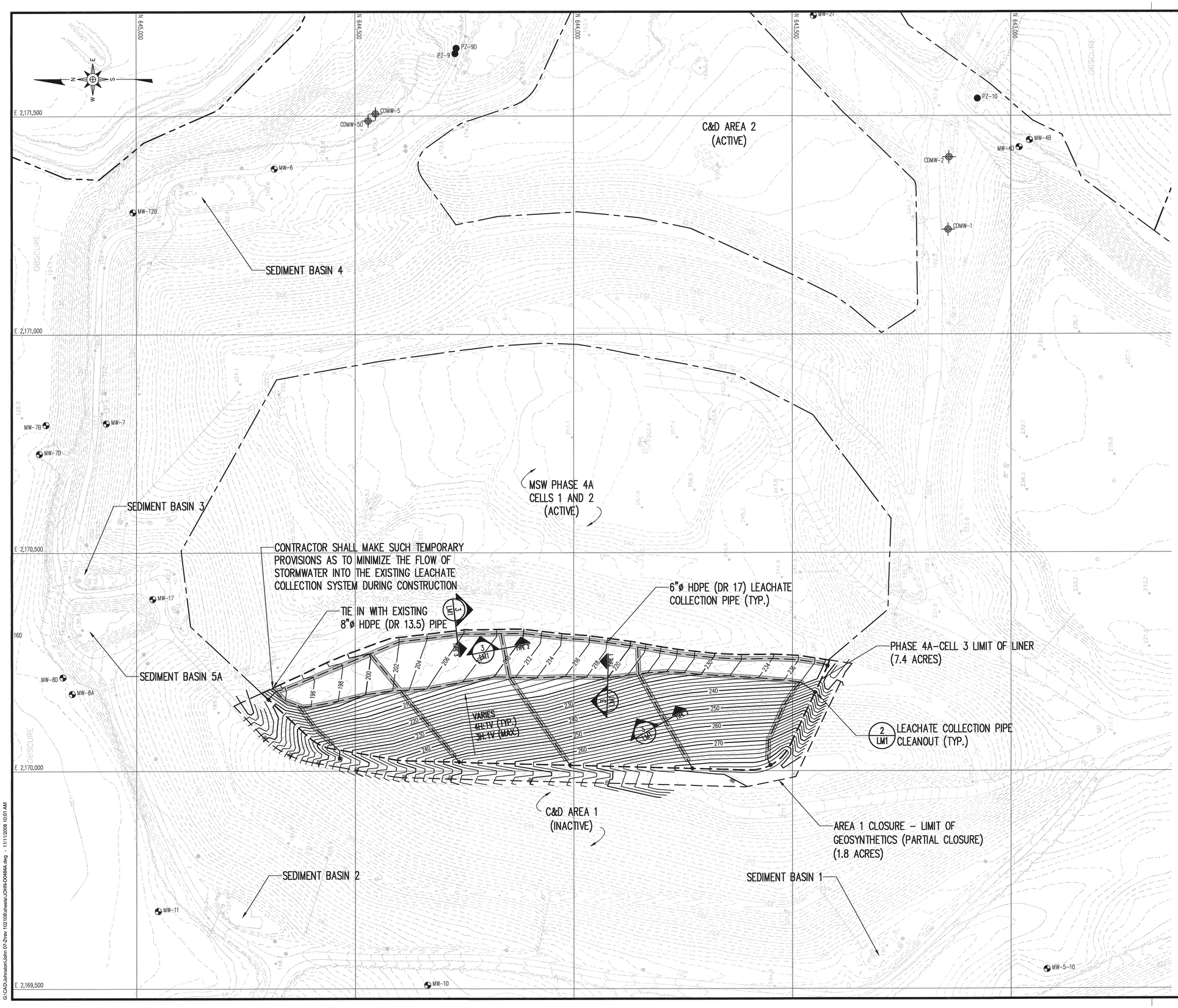

LEGEND

- EXISTING 10' CONTOUR (SEE REFERENCE 1)
- EXISTING 2' CONTOUR
- APPROXIMATE PROPERTY LINE
- LIMITS OF EXISTING LINER
- CELL 3 LIMIT OF LINER
- AREA 1 CLOSURE - LIMIT OF GEOSYNTHETICS
- PROPOSED 10' CONTOUR (SEE NOTE 1)
- PROPOSED 2' CONTOUR
- PERFORATED PIPING/STONE TRENCH
- SOLID PIPING
- CLEANOUT
- EXISTING MONITORING WELL
- EXISTING PIEZOMETER
- MONITORING WELL FOR C&D LANDFILL (UNSURVEYED LOCATION)

NOTES

1. GRADES SHOWN REPRESENT TOP OF SUBGRADE.

REFERENCES

1. OVERALL SITE TOPOGRAPHY PROVIDED BY GEODATA CORPORATION, BASED ON JUNE 6, 2008.

0 100' 200' 300'

DATE	NO.	REVISION
11/08	1	RESPONSE TO NCDENR COMMENTS AND ADDITIONAL CHANGES

RICHARDSON SMITH GARDNER & ASSOCIATES
Engineering and Geological Services
14 N. Boylan Ave.
Raleigh, N.C. 27603
ph: 919-828-0577
fax: 919-828-3899
www.rsgengineers.com

SEAL

SEAL

PROJECT TITLE: JOHNSTON COUNTY MSW LANDFILL
PHASE 4A - CELL 3
PERMIT AMENDMENT DRAWINGS

DRAWING TITLE: LEACHATE MANAGEMENT SYSTEMS
LEACHATE COLLECTION PIPING

DESIGNED BY: P.K.S.	DRAWN BY: J.A.L.
CHECKED BY:	PROJECT NO.: JOHN 07-2
SCALE: AS SHOWN	DATE: JUNE 2007
FILE NAME JOHN-D0484A	
SHEET NO. 6	DRAWING NO. S5

G:\CAD\Johnston\John 07-2\rev 102108\sheets\JOHN-D0484A.dwg - 11/11/2008 10:01 AM

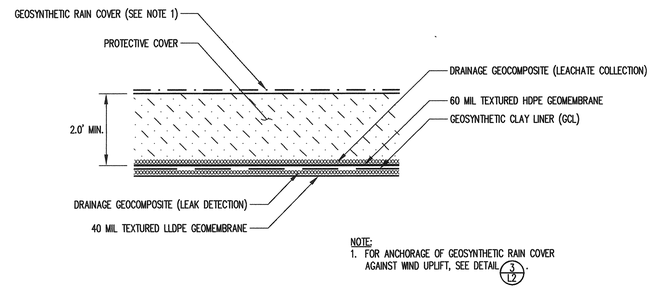

NOTE:
1. FOR ANCHORAGE OF GEOSYNTHETIC RAIN COVER AGAINST WIND UPLIFT, SEE DETAIL 3/L2.

LINER AND LEACHATE COLLECTION SYSTEM CROSS SECTIONS

DETAIL 1/L1
NOT TO SCALE

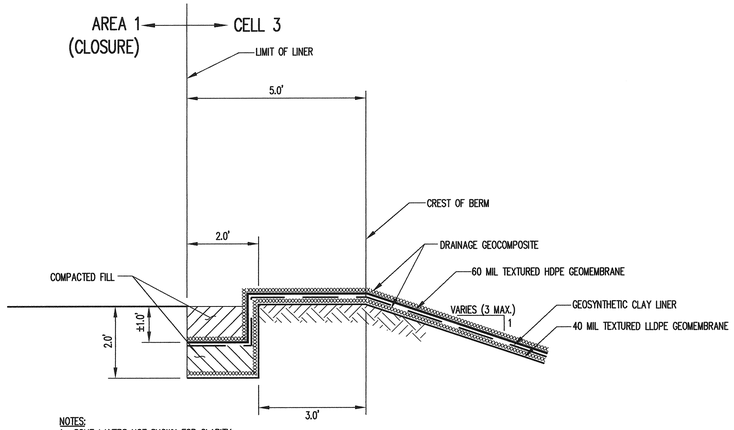

NOTES:
1. SOME LAYERS NOT SHOWN FOR CLARITY.

ANCHOR TRENCH

DETAIL 2/L1
NOT TO SCALE

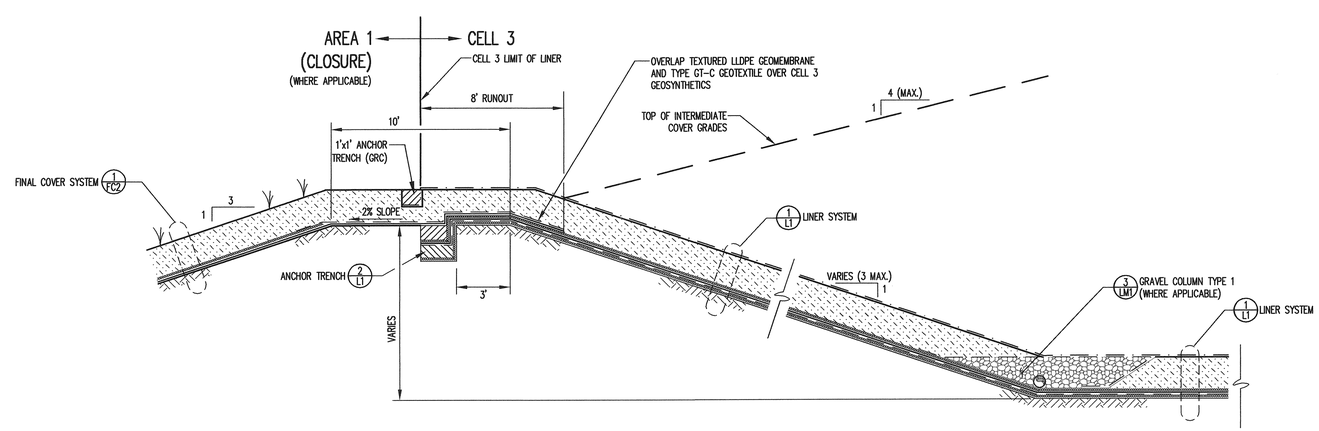

PERIMETER BERM

DETAIL 3/L1
NOT TO SCALE

DATE	NO.	REVISION
11/08	1	RESPONSE TO NCDENR COMMENTS AND ADDITIONAL CHANGES

RICHARDSON SMITH GARDNER & ASSOCIATES
Engineering and Geological Services
14 N. Boylan Ave.
Raleigh, N.C. 27603
ph: 919-828-0577
fax: 919-828-3899
www.rsgengineers.com

SEAL

SEAL

PROJECT TITLE:
JOHNSTON COUNTY MSW LANDFILL
PHASE 4A - CELL 3
PERMIT AMENDMENT DRAWINGS

DRAWING TITLE:
LINER AND BERM DETAILS
(SHEET 1 OF 2)

DESIGNED BY: P.K.S.	DRAWN BY: C.T.J.
CHECKED BY:	PROJECT NO.: JOHN 07-2
SCALE: AS SHOWN	DATE: JUNE 2007
FILE NAME JOHN-D0486A	
SHEET NO. 7	DRAWING NO. L1

G:\CAD\Johnston\John 07-2\rev 102108\sheets\JOHN-D0486A.dwg - 11/11/2008 10:08 AM

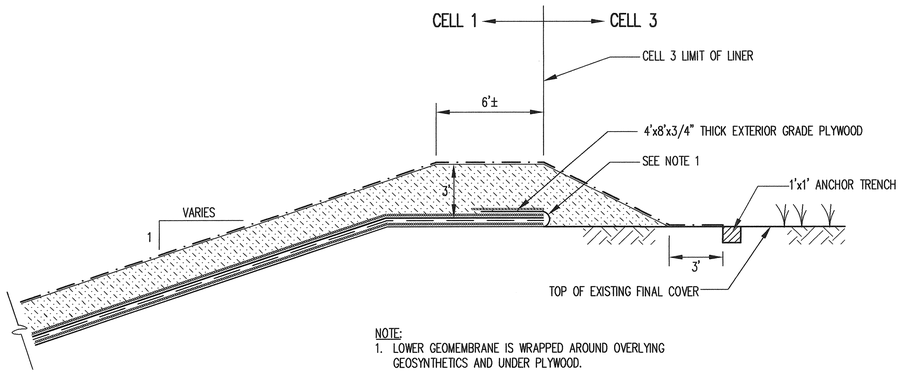

NOTE:
1. LOWER GEOMEMBRANE IS WRAPPED AROUND OVERLYING GEOSYNTHETICS AND UNDER PLYWOOD.

TYPICAL EXISTING LINER TERMINATION

DETAIL 1/L2
NOT TO SCALE

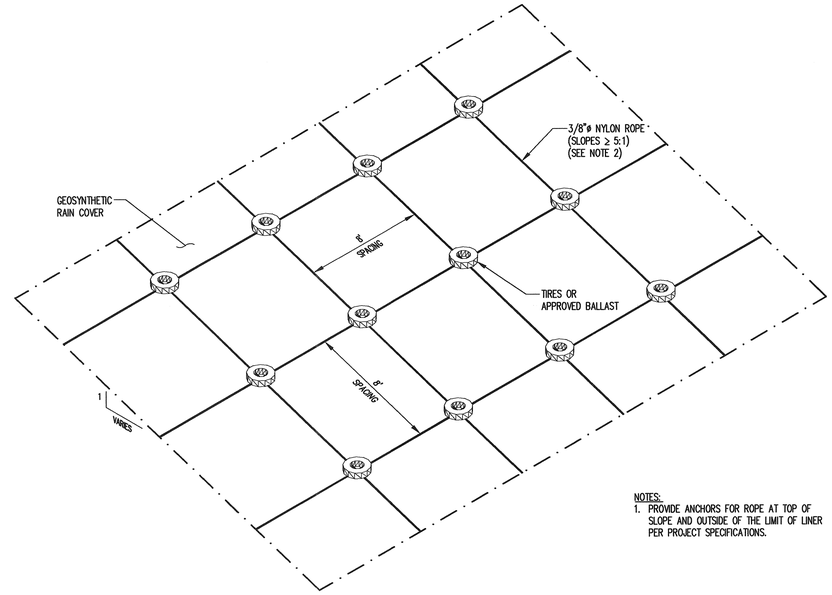

NOTES:
1. PROVIDE ANCHORS FOR ROPE AT TOP OF SLOPE AND OUTSIDE OF THE LIMIT OF LINER PER PROJECT SPECIFICATIONS.

ANCHORAGE OF GEOSYNTHETIC RAIN COVER

DETAIL 3/L2
NOT TO SCALE

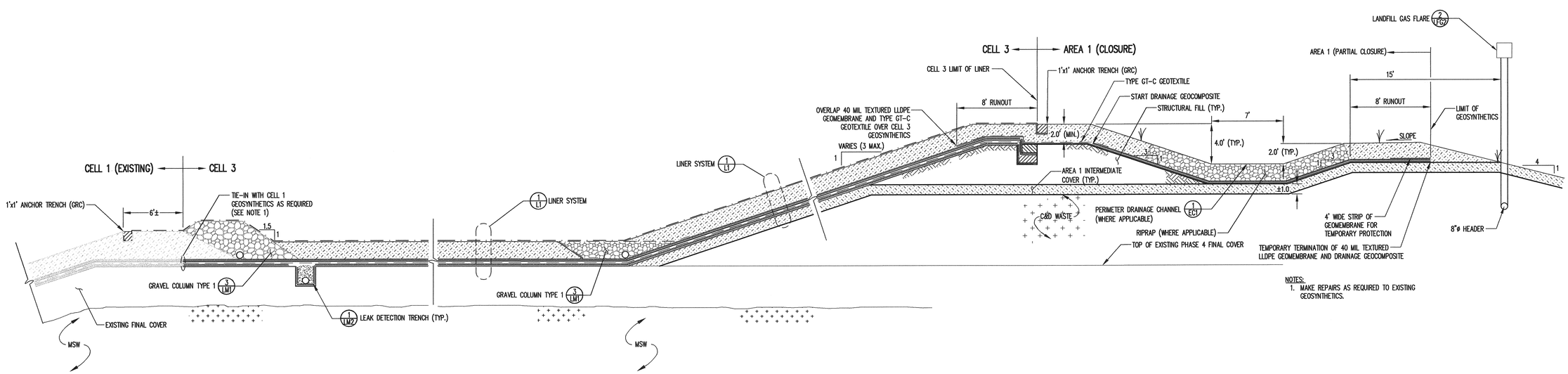

NOTES:
1. MAKE REPAIRS AS REQUIRED TO EXISTING GEOSYNTHETICS.

TYPICAL CELL 3 LINER AND LEACHATE COLLECTION SYSTEM CROSS SECTION

DETAIL 2/L2
NOT TO SCALE

DATE	NO.	REVISION
11/08	1	RESPONSE TO NCDENR COMMENTS AND ADDITIONAL CHANGES

RICHARDSON SMITH GARDNER & ASSOCIATES
Engineering and Geological Services
14 N. Boylan Ave.
Raleigh, N.C. 27603
www.rsgengineers.com
ph: 919-828-0577
fax: 919-828-3899

SEAL

SEAL

PROJECT TITLE:
JOHNSTON COUNTY MSW LANDFILL
PHASE 4A - CELL 3
PERMIT AMENDMENT DRAWINGS

DRAWING TITLE:
LINER AND BERM DETAILS
(SHEET 2 OF 2)

DESIGNED BY: P.K.S.	DRAWN BY: C.T.J.
CHECKED BY:	PROJECT NO.: JOHN 07-2
SCALE: AS SHOWN	DATE: JUNE 2007
FILE NAME: JOHN-D0487A	
SHEET NO. 8	DRAWING NO. L2

G:\CAD\Johnston\John 07-2\rev 102108\sheets\JOHN-D0487A.dwg - 11/19/2008 10:50 AM

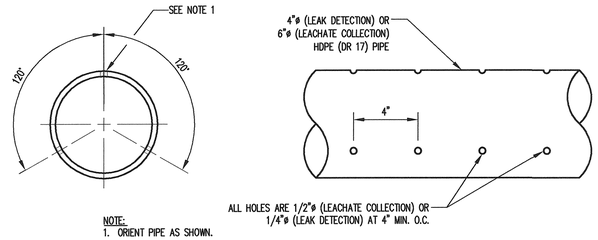

NOTE:
1. ORIENT PIPE AS SHOWN.

LEAK DETECTION / LEACHATE COLLECTION PIPING

HDPE PIPE PERFORATIONS

DETAIL 1/LM1
NOT TO SCALE

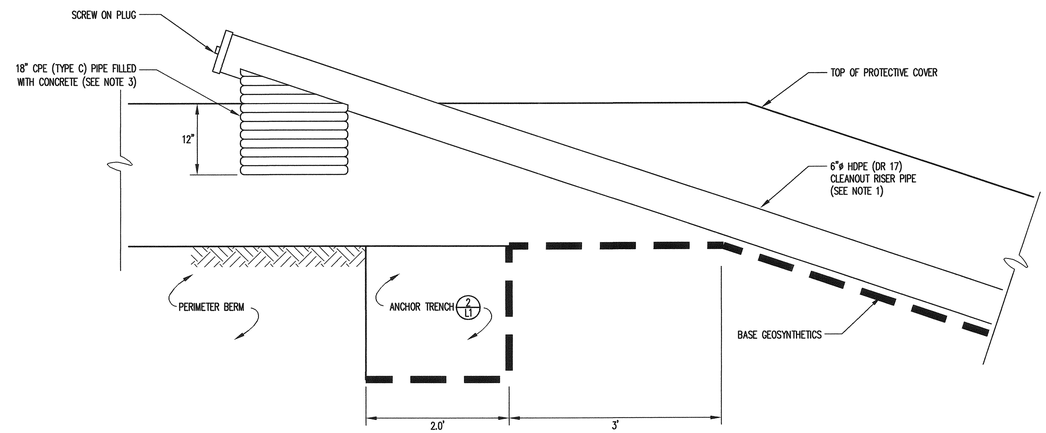

NOTES:
1. RISER PIPE TO BE CONSTRUCTED OF SAME PIPE MATERIAL AS LEACHATE COLLECTION PIPE EXCEPT THAT RISER PIPE IS SOLID WALL.
2. SOME LAYERS NOT SHOWN FOR CLARITY.
3. FORM CRADLE AT TOP OF 18" PIPE TO HOLD CLEANOUT RISER PIPE.

LEACHATE COLLECTION PIPE CLEANOUT AT CREST OF SLOPE

DETAIL 2/LM1
NOT TO SCALE

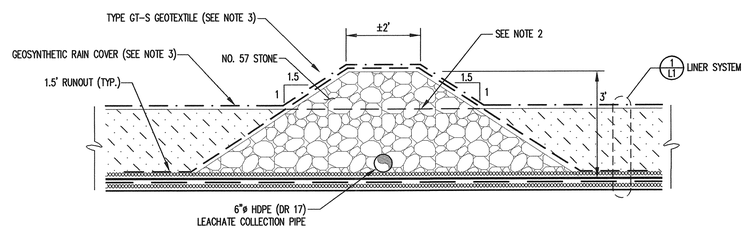

TYPE 2

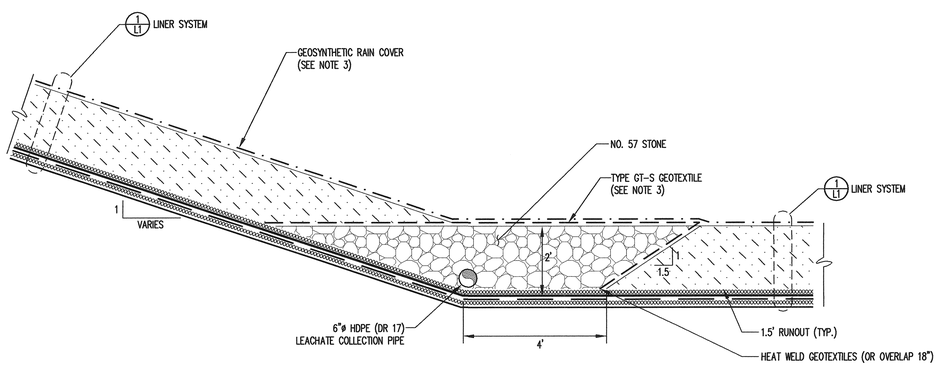

TYPE 1

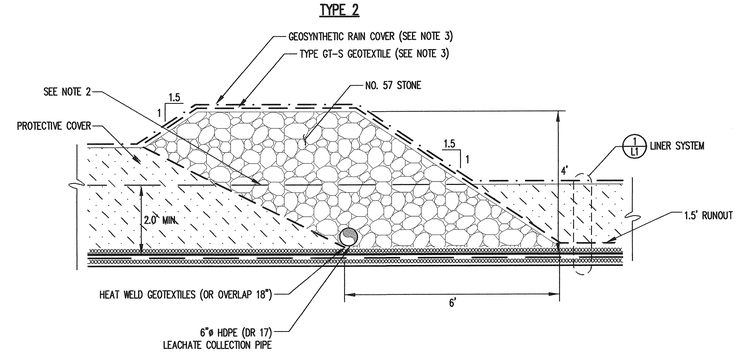

TYPE 3

GRAVEL COLUMN CROSS SECTIONS

DETAIL 3/LM1
NOT TO SCALE

NOTES:
1. SOME LAYERS OF LINER SYSTEM AND LEAK DETECTION TRENCHES (WHERE APPLICABLE) NOT SHOWN FOR CLARITY.
2. AT THE LOW END OF TYPE 2 GRAVEL COLUMNS, LEAVE THE LAST 5 TO 10 FEET FLUSH WITH THE TOP OF PROTECTIVE COVER TO ALLOW STORMWATER TO FLOW TO THE LOW END OF THE CELL. AT THE LOW END OF TYPE 3 GRAVEL COLUMNS, LEAVE THE LAST 10 FEET FLUSH WITH THE TOP OF THE PROTECTIVE COVER TO ALLOW FOR RUNOFF OF STORMWATER.
3. OPERATIONS:
   PRIOR TO ACTIVATION OF AN AREA DRAINING TO A PARTICULAR GRAVEL COLUMN, OR PORTION THEREOF, THE OWNER SHALL REMOVE ALL GEOSYNTHETIC RAIN COVER FROM THE AREA TO BE ACTIVATED, INCLUDING FROM GRAVEL COLUMNS. SUBSEQUENTLY, THE EXPOSED TYPE GT-S GEOTEXTILE SHALL BE REMOVED PRIOR TO THE PLACEMENT OF WASTE OVER THAT PORTION OF THE GRAVEL COLUMN.

NO.	REVISION	DATE
1	RESPONSE TO NODENR COMMENTS AND ADDITIONAL CHANGES	11/08

RICHARDSON SMITH GARDNER & ASSOCIATES
Engineering and Geological Services
14 N. Boylan Ave.
Raleigh, N.C. 27603
ph: 919-828-0577
fax: 919-828-3899
www.rsgengineers.com

SEAL

SEAL

PROJECT TITLE:
JOHNSTON COUNTY MSW LANDFILL
PHASE 4A - CELL 3
PERMIT AMENDMENT DRAWINGS

DRAWING TITLE:
LEACHATE MANAGEMENT
SYSTEM DETAILS
(SHEET 1 OF 2)

DESIGNED BY: P.K.S.	DRAWN BY: C.T.J.
CHECKED BY:	PROJECT NO.: JOHN 07-2
SCALE: AS SHOWN	DATE: JUNE 2007
FILE NAME: JOHN-D0490A	
SHEET NO. 9	DRAWING NO. LM1

G:\CAD\Johnston\John 07-2\rev 102108\sheets\JOHN-D0490A.dwg - 11/11/2008 10:32 AM

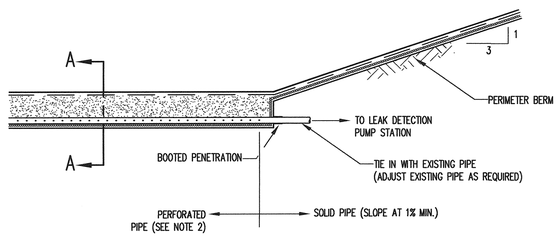

ELEVATION–DOWNSTREAM TERMINATION
SCALE: 1"= 4'

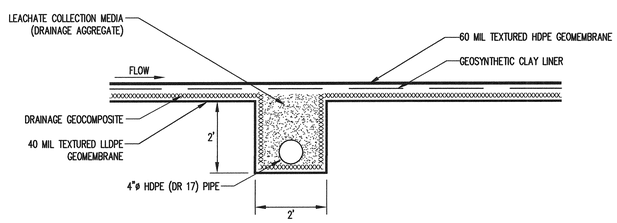

SECTION A–A
SCALE: 1"= 2'

NOTE:
1. LAYERS ABOVE UPPER GEOMEMBRANE ARE NOT SHOWN FOR CLARITY.
2. SEE DETAIL 1/LM1 FOR HDPE PIPE PERFORATIONS.

LEAK DETECTION TRENCH
DETAIL 1/LM2
NOT TO SCALE

NO.	DATE	REVISION

RICHARDSON SMITH GARDNER & ASSOCIATES
Engineering and Geological Services
14 N. Boylan Ave.
Raleigh, N.C. 27603
ph: 919-828-0577
fax: 919-828-3899
www.rsgenginneers.com

SEAL

SEAL
SEAL 022408 PIETER K. SCHUIL ENGINEER
5/24/08

PROJECT TITLE:
JOHNSTON COUNTY MSW LANDFILL
PHASE 4A - CELL 3
PERMIT AMENDMENT DRAWINGS

DRAWING TITLE:
LEACHATE MANAGEMENT SYSTEM DETAILS (SHEET 2 OF 2)

DESIGNED BY: P.K.S.	DRAWN BY: C.T.J.
CHECKED BY:	PROJECT NO.: JOHN 07-2
SCALE: AS SHOWN	DATE: JUNE 2007
FILE NAME JOHN-D0491	
SHEET NO. 10	DRAWING NO. LM2

G:\CAD\Johnston\John 07-2\sheets\JOHN-D0491.dwg - 5/3/2007 5:43 PM

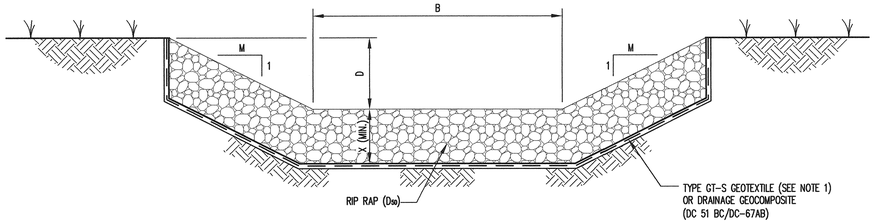

RIP RAP LINED CHANNELS

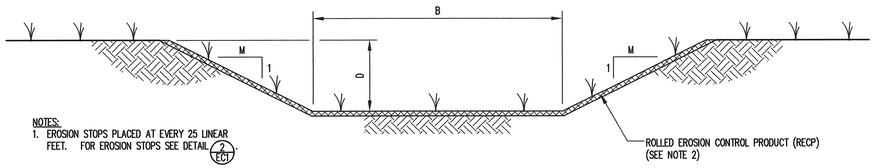

NOTES:
1. EROSION STOPS PLACED AT EVERY 25 LINEAR FEET. FOR EROSION STOPS SEE DETAIL 2/EC1.
2. FOR ANCHORAGE OF RECP, SEE DETAIL 1/EC2.

RECP LINED CHANNELS

DRAINAGE CHANNEL DETAILS

DETAIL 1/EC1
NOT TO SCALE

DRAINAGE CHANNEL SCHEDULE						
DRAINAGE CHANNEL NO.	LINING	B (FEET)	D (FEET)	M	D_{50} (INCHES)	X (FEET)
DC-21AB	TRM*	4.0	2.0	3	–	–
DC-21BC	RIP RAP	6.0	2.0	3	12	2.0
DC-41AB	TRM	6.0	2.0	3	–	–
DC-51AB	TRM	7.0	2.0	3	–	–
DC-51BC	RIP RAP	7.0	2.0	3	12	2.0
DC-64AB	TRM	4.0	2.0	3	–	–
DC-66AB	TRM	6.0	2.0	3	–	–
DC-67AB	RIP RAP	7.0	2.0	3	12	2.0

*TRM – TURF REINFORCEMENT MATTING

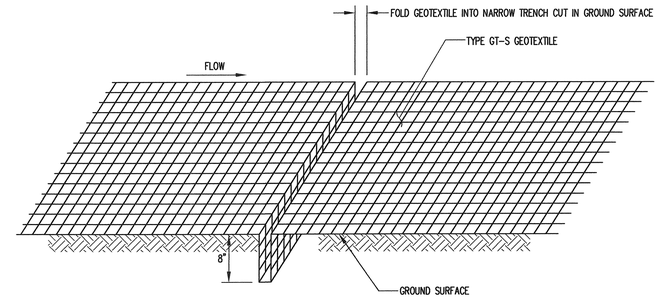

EROSION STOP DETAIL

DETAIL 2/EC1
NOT TO SCALE

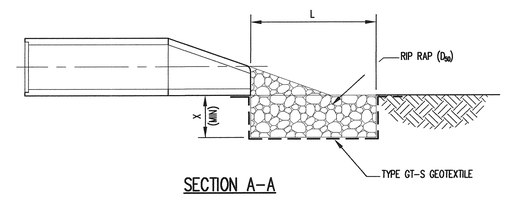

SECTION A-A

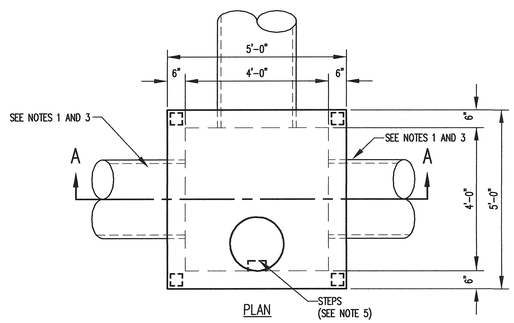

PLAN

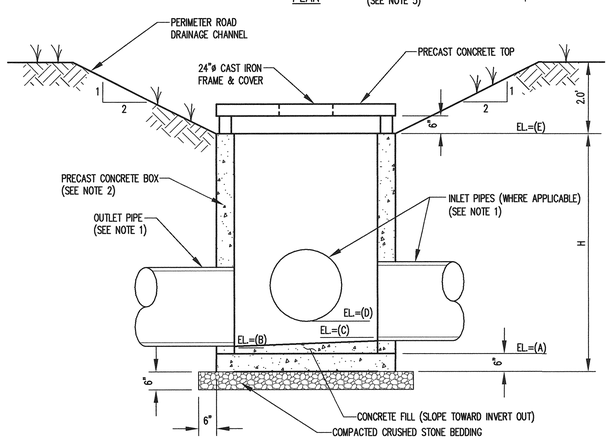

SECTION A-A

DROP INLET SCHEDULE						
DROP INLET	A (FEET)	B (FEET)	C (FEET)	D (FEET)	E (FEET)	H (FEET)
DI-51	151.5	152.0	154.0	N/A	157.0	6.0

NOTES:
1. PROVIDE WATERTIGHT JOINTS ON ALL PIPING.
2. PRECAST CONCRETE BOXES SHALL CONFORM TO THE FOLLOWING REQUIREMENTS:
   A. CONCRETE: COMPRESSIVE STRENGTH 4000 PSI
   B. REINFORCING: ASTM A-615, GRADE 60
   C. MEETS H-20 LOADING.
3. PIPES MAY BE ORIENTED DIFFERENTLY WITH RESPECT TO THE THE CHANNEL THAN DISPLAYED HERE. SEE DRAWING EC1 FOR PROPER ORIENTATION.
4. THE CONTRACTOR SHALL PROVIDE ADEQUATE PROTECTION FROM SEDIMENTATION FOR ALL DROP INLETS USING GRAVEL AND WIRE MESH FILTERS OR OTHER METHOD AS APPROVED BY THE ENGINEER.
5. PROVIDE STEPS FOR DROP INLETS WITH H>4.5'. STEPS SHALL HAVE A 16" SPACING THE FULL HEIGHT OF THE DROP INLET. START FIRST STEP 6" BELOW TOP.

DROP INLET DETAILS

DETAIL 3/EC1
NOT TO SCALE

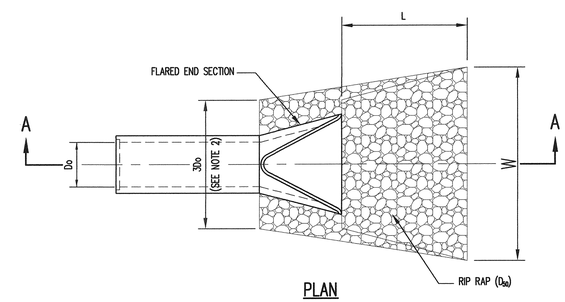

PLAN

RIP RAP OUTLET PROTECTION SCHEDULE					
PIPE	D_0	L	W	X	D_{50}
C-41	18"	10'	10'	12"	6"

NOTES:
1. D_{50} REFERS TO THE MINIMUM REQUIRED AVERAGE STONE SIZE.
2. FOR MORE THAN ONE PIPE, EXTEND RIP RAP 1.0' MIN. BEYOND OUTSIDE EDGES OF PIPES.

RIP RAP OUTLET PROTECTION (OUTLET TO FLAT AREA)

DETAIL 4/EC1
NOT TO SCALE

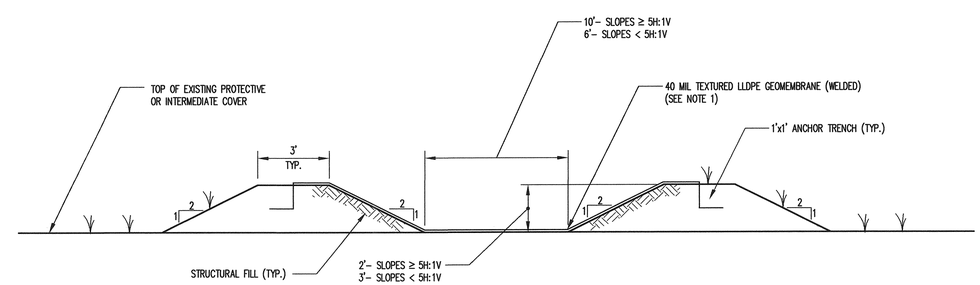

TEMPORARY DOWN CHUTE

DETAIL 5/EC1
NOT TO SCALE

NOTES:
1. EXTEND LLDPE GEOMEMBRANE UNDER GEOSYNTHETIC RAIN COVER (GRC) PAST LOCATION OF GRAVEL COLUMN. ATTATCH GRC TO LLDPE GEOMEMBRANE USING METHOD APPROVED BY THE ENGINEER.
2. TERMINATE DOWN CHUTE INTO EXISTING RIP RAP LINED DRAINAGE CHANNEL. TUCK GEOMEMBRANE UNDER EDGE OF RIP RAP.

NO.	DATE	REVISION
1	11/08	RESPONSE TO NCDENR COMMENTS AND ADDITIONAL CHANGES

RICHARDSON SMITH GARDNER & ASSOCIATES
Engineering and Geological Services
14 N. Boylan Ave.
Raleigh, N.C. 27603
ph: 919-828-0577
fax: 919-828-3899
www.rsgengineers.com

SEAL

SEAL

PROJECT TITLE:
JOHNSTON COUNTY MSW LANDFILL
PHASE 4A - CELL 3
PERMIT AMENDMENT DRAWINGS

DRAWING TITLE:
EROSION AND SEDIMENTATION DETAILS
(SHEET 1 OF 2)

DESIGNED BY: P.K.S.	DRAWN BY: C.T.J.
CHECKED BY:	PROJECT NO.: JOHN 07-2
SCALE: AS SHOWN	DATE: JUNE 2007
FILE NAME: JOHN-D0492A	
SHEET NO. 11	DRAWING NO. EC1

G:\CAD\Johnston\John 07-2\rev 102108\sheets\JOHN-D0492A.dwg - 11/19/2008 10:59 AM

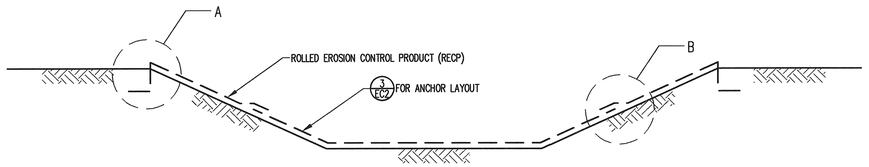

TYPICAL CHANNEL CROSS SECTION

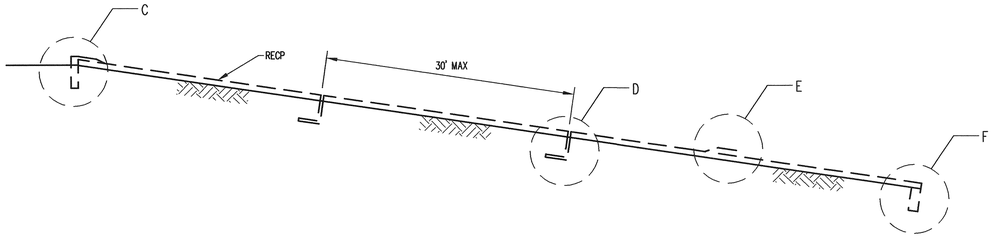

TYPICAL CHANNEL PROFILE

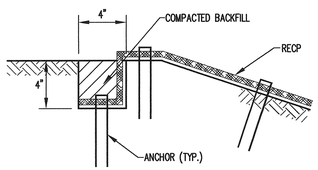

A. LONGITUDINAL ANCHOR TRENCH

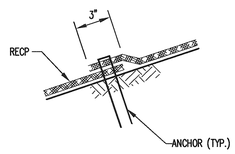

B. OVERLAP AT ADJACENT EDGES

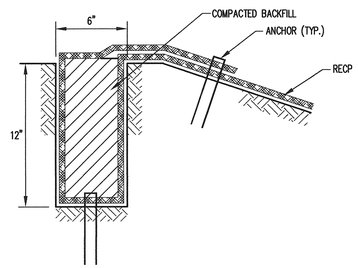

C. UPSTREAM TERMINAL ANCHOR TRENCH

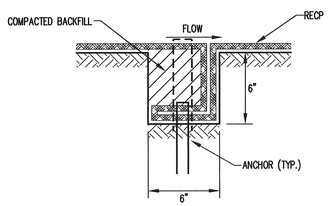

D. INTERMITTENT CHECK SLOT

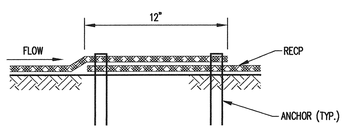

E. OVERLAP AT ROLL ENDS

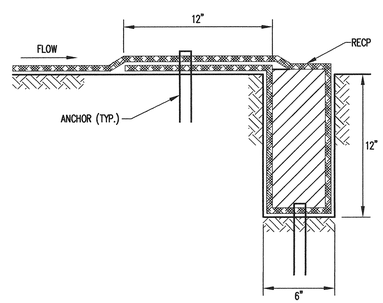

F. DOWNSTREAM TERMINAL ANCHOR TRENCH

NOTES:
1. PLACE ANCHORS AT ANCHOR TRENCHES, OVERLAPS, AND CHECK SLOTS ON 1 FOOT CENTERS. IF APPLICABLE, STAGGER ANCHOR SPACING BETWEEN MULTIPLE ROWS OF ANCHORS.

INSTALLATION OF ROLLED EROSION CONTROL PRODUCTS (CHANNELS)

DETAIL 1 EC2
NOT TO SCALE

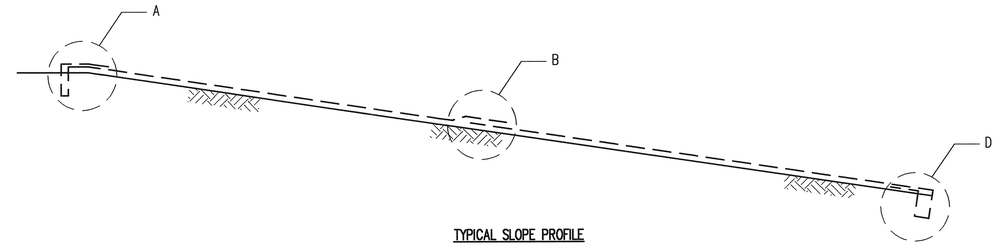

TYPICAL SLOPE PROFILE

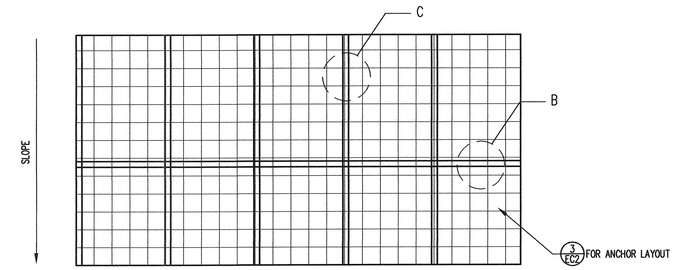

TYPICAL SLOPE PLAN VIEW

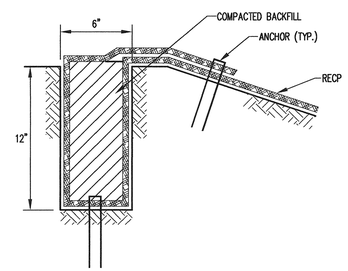

A. UPSLOPE TERMINAL ANCHOR TRENCH

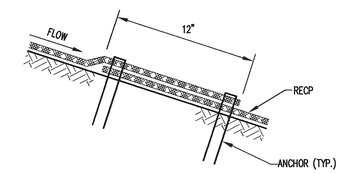

B. OVERLAP AT ROLL ENDS

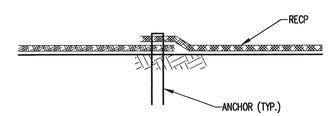

C. OVERLAP AT ADJACENT EDGES

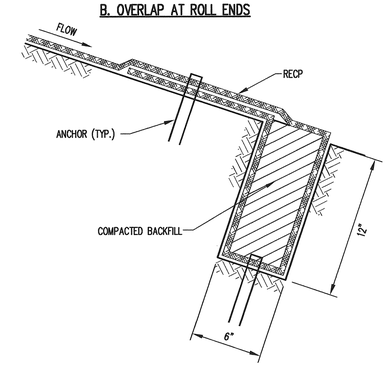

D. DOWNSLOPE TERMINAL ANCHOR TRENCH

NOTE:
1. PLACE ANCHORS AT ANCHOR TRENCHES, OVERLAPS, AND CHECK SLOTS ON 1 FOOT CENTERS. IF APPLICABLE, STAGGER ANCHOR SPACING BETWEEN MULTIPLE ROWS OF ANCHORS.

INSTALLATION OF ROLLED EROSION CONTROL PRODUCTS (SLOPES)

DETAIL 2 EC2
NOT TO SCALE

ANCHOR SPACING SCHEDULE	
LOCATION	REQUIRED ANCHOR SPACING (ANCHORS/YD^2)
ALL CHANNELS	2.5
1.5H:1V SLOPES	2.0
2H:1V SLOPES	2.0
2.5H:1V SLOPES	1.5
3H:1V SLOPES	1.5
3.5H:1V SLOPES	1.0
4H:1V SLOPES	1.0

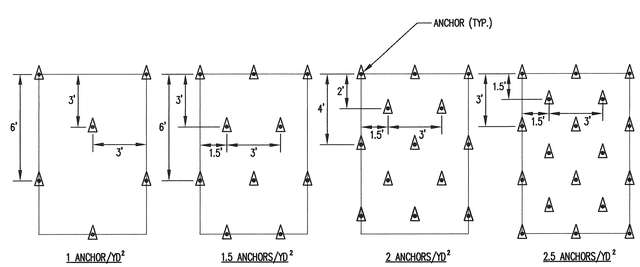

ANCHOR LAYOUT

DETAIL 3 EC2
NOT TO SCALE

REVISION	NO.	DATE

RICHARDSON SMITH GARDNER & ASSOCIATES
Engineering and Geological Services
14 N. Boylan Ave.
Raleigh, N.C. 27603
ph: 919-828-0577
fax: 919-828-3899
www.rsgengineers.com

SEAL

SEAL

PROJECT TITLE: JOHNSTON COUNTY MSW LANDFILL
PHASE 4A - CELL 3
PERMIT AMENDMENT DRAWINGS

DRAWING TITLE: EROSION AND SEDIMENTATION DETAILS (SHEET 2 OF 2)

DESIGNED BY: P.K.S.	DRAWN BY: C.T.J.
CHECKED BY:	PROJECT NO.: JOHN 07-2
SCALE: AS SHOWN	DATE: JUNE 2007
FILE NAME: JOHN-D0493	
SHEET NO. 12	DRAWING NO. EC2

G:\CAD\Johnston\John 07-2\sheets\JOHN-D0493.dwg - 5/3/2007 1:55 PM

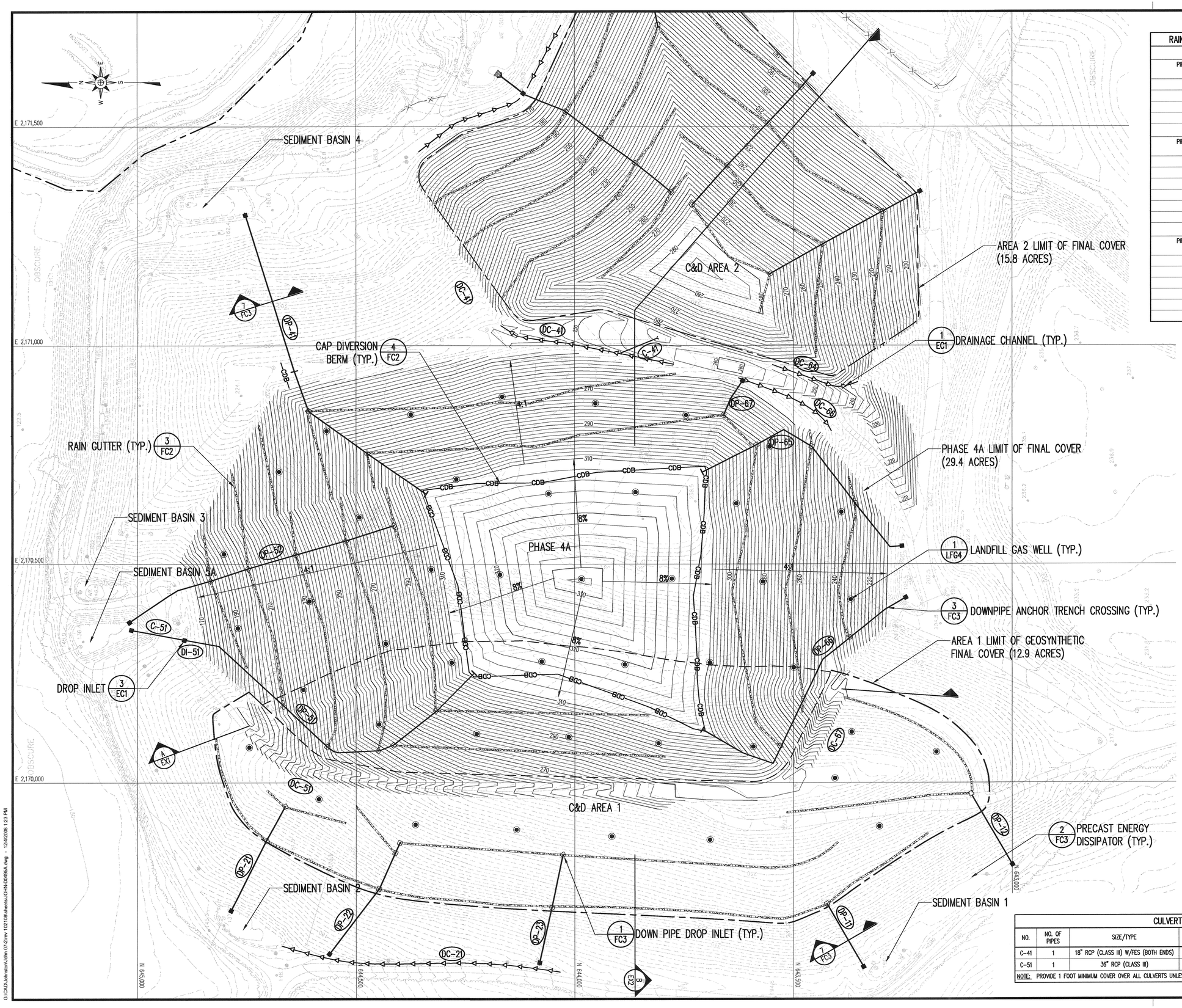

RAIN GUTTERS & DOWN PIPES SCHEDULE	
RAIN GUTTERS	
PIPE DIAMETER (INCHES)	MAX DRAINAGE AREA (ACRES)
6	0.32
8	0.67
10	1.18
12	1.89
DOWN PIPE DROP INLETS	
PIPE DIAMETER (INCHES)	MAX DRAINAGE AREA (ACRES)
8	0.52
10	0.80
12	1.14
14	1.37
16	1.80
18	2.27
DOWN PIPES	
PIPE DIAMETER (INCHES)	MAX DRAINAGE AREA (ACRES)
8	1.02
10	1.80
12	2.88
14	3.65
16	5.27
18	7.15

LEGEND

- EXISTING 10' CONTOUR (SEE REFERENCE 1)
- EXISTING 2' CONTOUR
- APPROXIMATE PROPERTY LINE
- LIMITS OF FINAL COVER
- PROPOSED 10' CONTOUR (SEE NOTE 1)
- PROPOSED 2' CONTOUR
- DRAINAGE CHANNEL
- DIVERSION BERM
- SILT FENCE
- CULVERT/DROP INLET
- CAP DIVERSION BERM
- DOWN PIPE
- DRAINAGE CHANNEL
- CULVERT NUMBER
- DROP INLET NUMBER
- DOWN PIPE DROP INLET
- PRECAST ENERGY DISSIPATOR
- RAIN GUTTER
- DOWN PIPE WITH TEE INLET
- LANDFILL GAS WELL

NOTES

1. GRADES SHOWN FOR PHASE 4A AND AREA 2 REPRESENT TOP OF FINAL COVER. GRADES SHOWN FOR AREA 1 REPRESENT TOP OF INTERMEDIATE COVER.

REFERENCES

1. OVERALL SITE TOPOGRAPHY PROVIDED BY GEODATA CORP., BASED ON JUNE 6, 2008 AERIAL PHOTOGRAPHY.

0 100' 200' 300'

CULVERT SCHEDULE						
NO.	NO. OF PIPES	SIZE/TYPE	LENGTH (FEET)	SLOPE (%)	INV. IN (FEET)	INV. OUT (FEET)	REMARKS
C-41	1	18" RCP (CLASS III) W/FES (BOTH ENDS)	84	2.4	253.0	251.0	–
C-51	1	36" RCP (CLASS III)	120	10.0	152.0	140.0	INLET IN DI-51

NOTE: PROVIDE 1 FOOT MINIMUM COVER OVER ALL CULVERTS UNLESS OTHERWISE APPROVED BT THE ENGINEER.

DATE	NO.	REVISION
11/08	1	RESPONSE TO NCDENR COMMENTS AND ADDITIONAL CHANGES

RICHARDSON SMITH GARDNER & ASSOCIATES
Engineering and Geological Services
14 N. Boylan Ave. Raleigh, N.C. 27603
ph: 919-828-0577
fax: 919-828-3899
www.rsgengineers.com

SEAL

PROJECT TITLE: JOHNSTON COUNTY MSW LANDFILL PHASE 4A - CELL 3 PERMIT AMENDMENT DRAWINGS

DRAWING TITLE: PHASE 4A FINAL COVER GRADING AND DRAINAGE PLAN

DESIGNED BY: P.K.S.	DRAWN BY: J.A.L.
CHECKED BY:	PROJECT NO.: JOHN 07-2
SCALE: AS SHOWN	DATE: JUNE 2007
FILE NAME: JOHN-D0495A	
SHEET NO. 13	DRAWING NO. FC1

G:\CAD\Johnston\John 07-2\rev 10\2108\sheets\JOHN-D0495A.dwg - 12/4/2008 1:23 PM

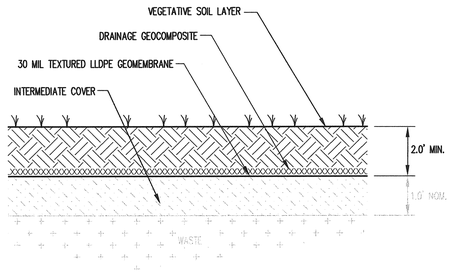

FINAL COVER
DETAIL 1/FC2
NOT TO SCALE

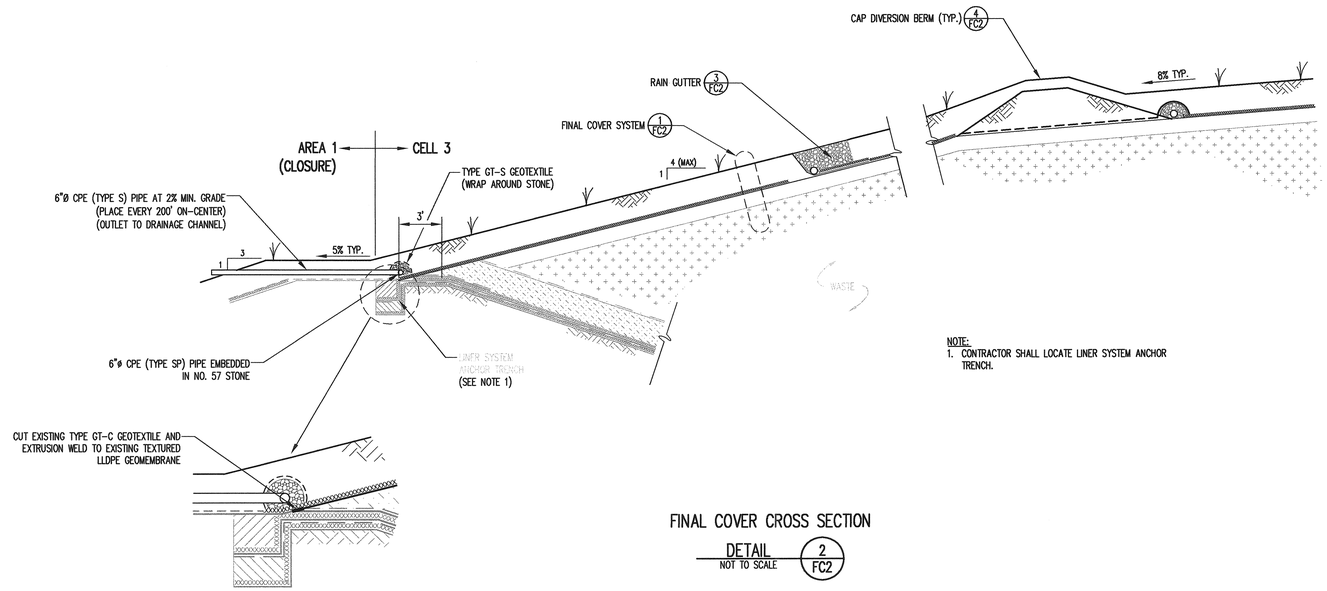

NOTE:
1. CONTRACTOR SHALL LOCATE LINER SYSTEM ANCHOR TRENCH.

FINAL COVER CROSS SECTION
DETAIL 2/FC2
NOT TO SCALE

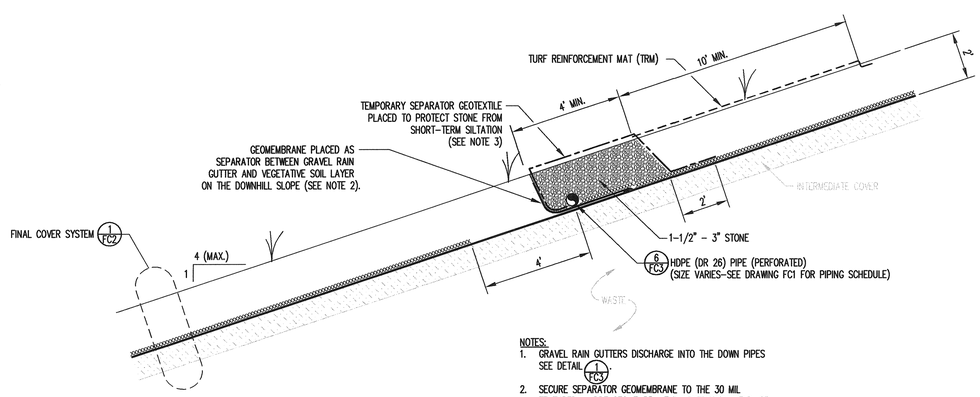

NOTES:
1. GRAVEL RAIN GUTTERS DISCHARGE INTO THE DOWN PIPES SEE DETAIL 1/FC3.
2. SECURE SEPARATOR GEOMEMBRANE TO THE 30 MIL TEXTURED LLDPE GEOMEMBRANE BY EXTRUSION WELD, OR WITH TAPECOAT 9-25 (2"), OR EQUAL.
2. 4 OZ./ SY NON-WOVEN GEOTEXTILE SHALL BE USED.

RAIN GUTTER
DETAIL 3/FC2
NOT TO SCALE

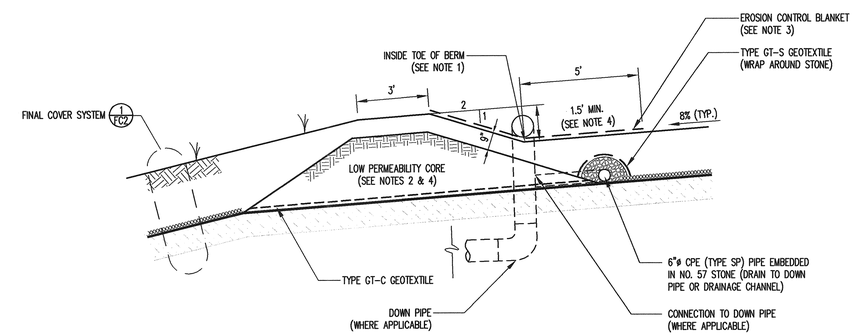

NOTES:
1. GRADE INSIDE TOE OF BERM TOWARD DOWN CHUTE OR DOWN PIPE AT 0.5% MIN. SLOPE.
2. CONSTRUCT CORE FROM TYPE CH, CL, MH, ML, SC, OR SM MATERIALS (USCS CLASSIFICATION).
3. ANCHOR OF EROSION CONTROL BLANKET, ACCORDING TO THE MANUFACTURER'S RECOMMENDATIONS.
4. TAPER BERM HEIGHT UP TO 3' AT DOWN PIPE LOCATION.

CAP DIVERSION BERM
DETAIL 4/FC2
NOT TO SCALE

DATE	NO.	REVISION
11/08	1	RESPONSE TO NCDENR COMMENTS AND ADDITIONAL CHANGES

RICHARDSON SMITH GARDNER & ASSOCIATES
Engineering and Geological Services
14 N. Boylan Ave.
Raleigh, N.C. 27603
www.rsgengineers.com
ph: 919-828-0577
fax: 919-828-3899

SEAL

PROJECT TITLE: JOHNSTON COUNTY MSW LANDFILL PHASE 4A - CELL 3 PERMIT AMENDMENT DRAWINGS

DRAWING TITLE: FINAL COVER DETAILS (SHEET 1 OF 2)

DESIGNED BY: P.K.S.	DRAWN BY: C.T.J.
CHECKED BY:	PROJECT NO.: JOHN 07-2
SCALE: AS SHOWN	DATE: JUNE 2007
FILE NAME: JOHN-D0496A	
SHEET NO. 14	DRAWING NO. FC2

G:\CAD\Johnston\John 07-2\rev 102108\sheets\JOHN-D0496A.dwg - 11/21/2008 11:31 AM

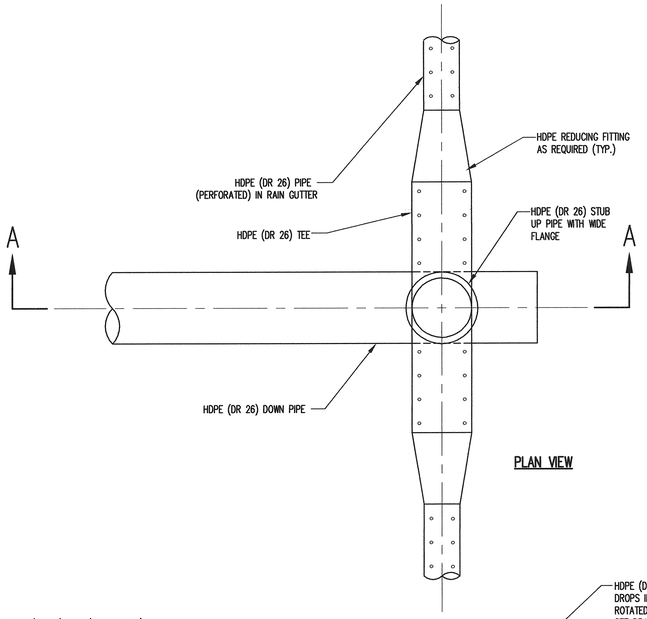

PLAN VIEW

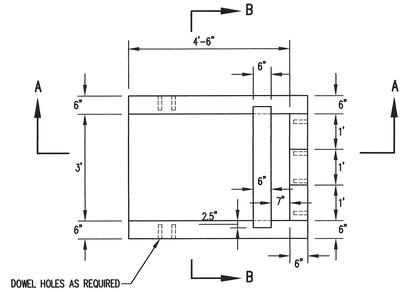

PLAN VIEW

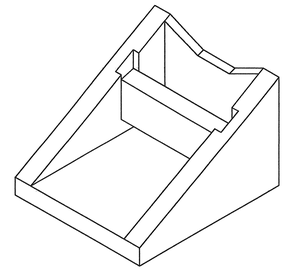

ISOMETRIC VIEW

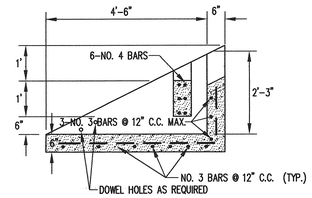

SECTION A–A

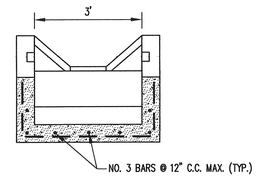

SECTION B–B

PRECAST ENERGY DISSIPATOR

DETAIL 2 / FC3
NOT TO SCALE

NOTES:
1. CONCRETE STRENGTH 4000 PSI MINIMUM.
2. REINFORCING STEEL SHALL CONFORM TO ASTM A-615, GRADE 40.
3. DIMENSIONS SHOWN FOR CONCRETE THICKNESS ARE MINIMUMS. ACTUAL MEASUREMENTS MAY VARY WITH MANUFACTURER'S TOLERANCES.

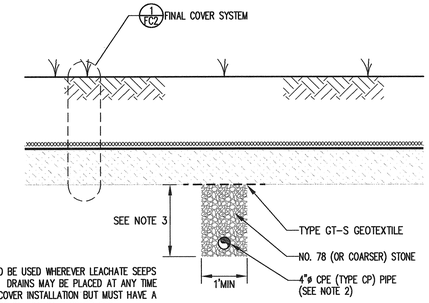

NOTES:
1 THIS DETAIL IS TO BE USED WHEREVER LEACHATE SEEPS ARE A PROBLEM. DRAINS MAY BE PLACED AT ANY TIME PRIOR TO FINAL COVER INSTALLATION BUT MUST HAVE A MINIMUM OF 12" OF INTERMEDIATE COVER SOIL.
2. CONNECT CPE PIPE TO A LEACHATE COLLECTION PIPE CLEANOUT OR TURN DOWN INTO THE LEACHATE COLLECTION SYSTEM STONE TO DRAIN SEEP COLLECTION TRENCH.
3. DEPTH OF TRENCH IS AS REQUIRED TO DRAIN SEEP(S).

SEEP COLLECTION TRENCH

DETAIL 5 / FC3
NOT TO SCALE

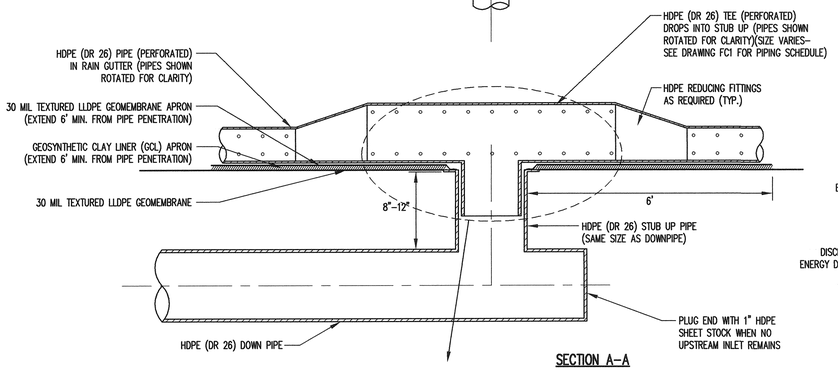

SECTION A–A

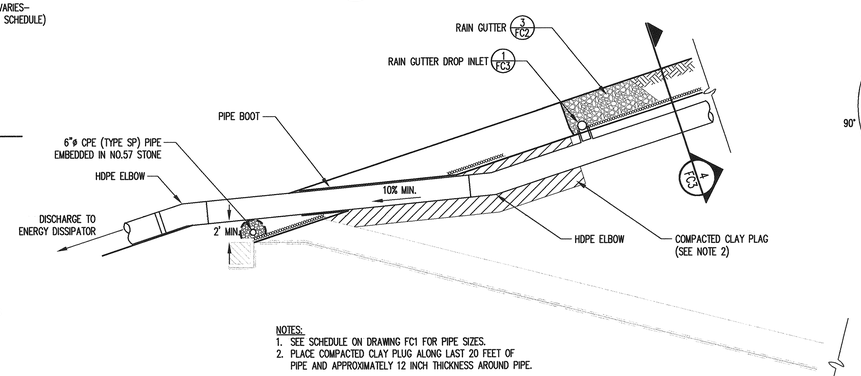

NOTES:
1. SEE SCHEDULE ON DRAWING FC1 FOR PIPE SIZES.
2. PLACE COMPACTED CLAY PLUG ALONG LAST 20 FEET OF PIPE AND APPROXIMATELY 12 INCH THICKNESS AROUND PIPE.

DOWN PIPE AT ANCHOR TRENCH CROSSING

DETAIL 3 / FC3
NOT TO SCALE

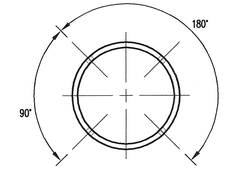

SECTION A–A

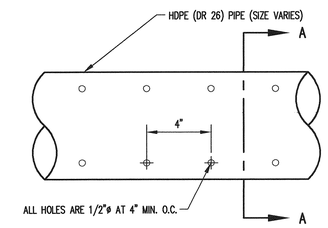

RAIN GUTTER PIPE PERFORATIONS

DETAIL 6 / FC3
NOT TO SCALE

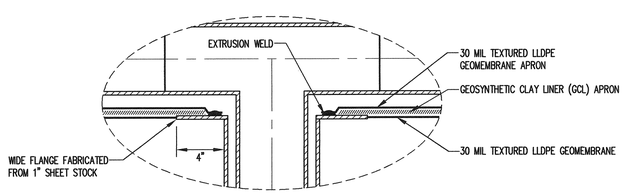

DETAIL

RAIN GUTTER DROP INLET

DETAIL 1 / FC3
NOT TO SCALE

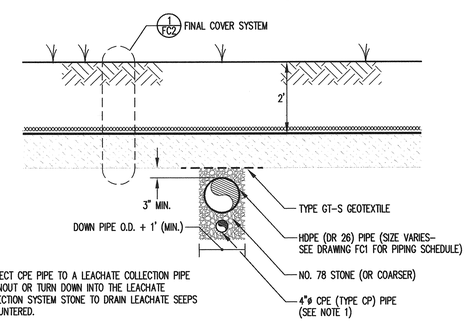

NOTE:
1. CONNECT CPE PIPE TO A LEACHATE COLLECTION PIPE CLEANOUT OR TURN DOWN INTO THE LEACHATE COLLECTION SYSTEM STONE TO DRAIN LEACHATE SEEPS ENCOUNTERED.

TYPICAL DOWN PIPE SECTION

DETAIL 4 / FC3
NOT TO SCALE

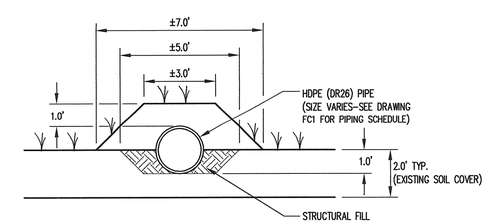

TYPICAL DOWN PIPE SECTION (SOIL-ONLY FINAL COVER)

DETAIL 7 / FC3
NOT TO SCALE

NO.	DATE	REVISION
1	11/08	RESPONSE TO NCDENR COMMENTS AND ADDITIONAL CHANGES

RICHARDSON SMITH GARDNER & ASSOCIATES
Engineering and Geological Services
14 N. Boylan Ave.
Raleigh, N.C. 27603
ph: 919-828-0577
fax: 919-828-3899
www.rsgengineers.com

SEAL

PROJECT TITLE: JOHNSTON COUNTY MSW LANDFILL PHASE 4A - CELL 3 PERMIT AMENDMENT DRAWINGS

DRAWING TITLE: FINAL COVER DETAILS (SHEET 2 OF 2)

DESIGNED BY: P.K.S.	DRAWN BY: J.A.L.
CHECKED BY:	PROJECT NO.: JOHN 07-2
SCALE: AS SHOWN	DATE: JUNE 2007
FILE NAME: JOHN-D0497A	
SHEET NO. 15	DRAWING NO. FC3

G:\CAD\Johnston\John 07-2\rev 102108\sheets\JOHNDD497A.dwg - 12/4/2008 1:31 PM

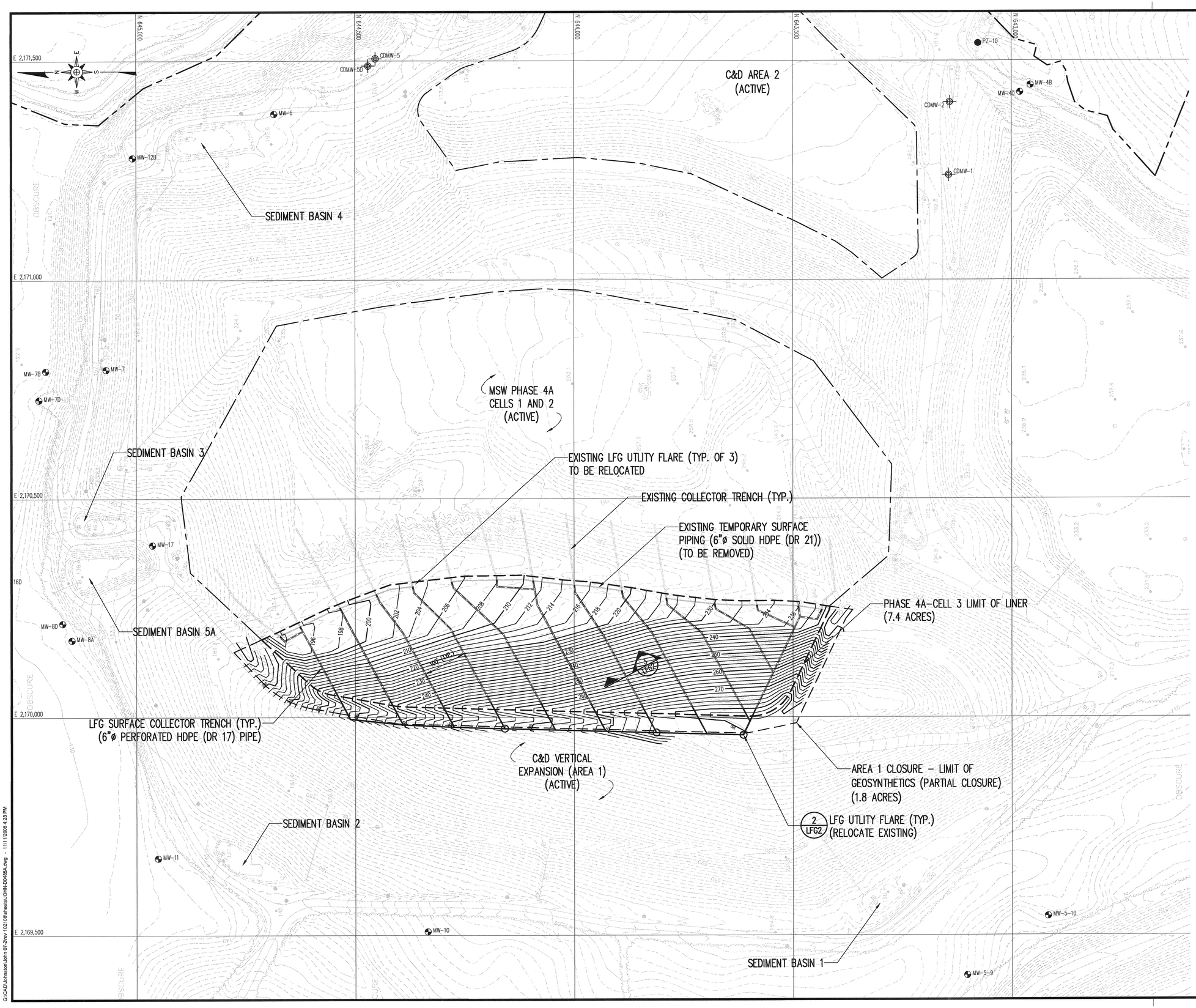

LEGEND

- EXISTING 10' CONTOUR (SEE REFERENCE 1)
- EXISTING 2' CONTOUR
- APPROXIMATE PROPERTY LINE
- LIMITS OF EXISTING LINER
- CELL 3 LIMIT OF LINER
- AREA 1 CLOSURE - LIMIT OF GEOSYNTHETICS
- PROPOSED 10' CONTOUR (SEE NOTE 1)
- PROPOSED 2' CONTOUR
- LFG SURFACE COLLECTOR TRENCH/ PERFORATED PIPING
- SOLID PIPING
- LFG UTILITY FLARE

NOTES

1. GRADES SHOWN REPRESENT TOP OF SUBGRADE.

REFERENCES

1. OVERALL SITE TOPOGRAPHY PROVIDED BY GEODATA CORP., BASED ON JUNE 6, 2008 AERIAL PHOTOGRAPHY.

0 100' 200' 300'

DATE	NO.	REVISION
11/08	1	RESPONSE TO NODENR COMMENTS AND ADDITIONAL CHANGES

RICHARDSON SMITH GARDNER & ASSOCIATES
Engineering and Geological Services
14 N. Boylan Ave.
Raleigh, N.C. 27603
ph: 919-828-0577
fax: 919-828-3899
www.rsgengineers.com

SEAL

SEAL

PROJECT TITLE:
JOHNSTON COUNTY MSW LANDFILL
PHASE 4A - CELL 3
PERMIT AMENDMENT DRAWINGS

DRAWING TITLE:
CELL 3 LANDFILL GAS
MANAGEMENT SYSTEM

DESIGNED BY: P.K.S.	DRAWN BY: J.A.L.
CHECKED BY:	PROJECT NO.: JOHN 07-2
SCALE: AS SHOWN	DATE: JUNE 2007
FILE NAME JOHN-D0485A	
SHEET NO. 16	DRAWING NO. LFG1

G:\CAD\Johnston\John 07-2\rev 10210\sheets\JOHN-D0485A.dwg - 11/11/2008 4:23 PM

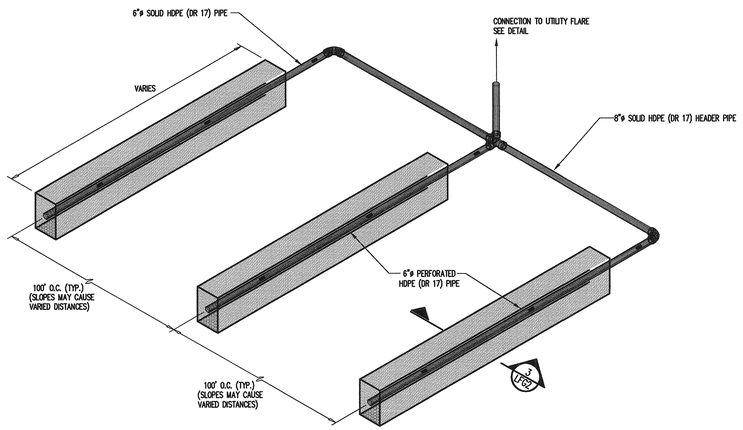

GAS COLLECTION NETWORK

DETAIL 1 / LFG2
NOT TO SCALE

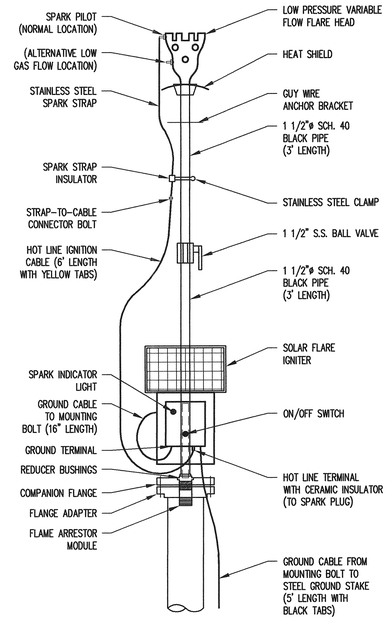

LFG UTILITY FLARE

DETAIL 2 / LFG2
NOT TO SCALE

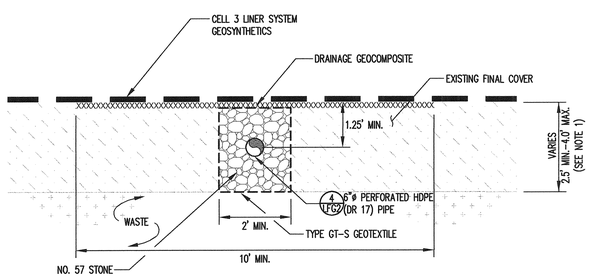

NOTE:
1. EXCAVATE TRENCH SUCH THAT EXISTING COVER IS BREACHED OR TO A MAXIMUM DEPTH OF 4 FEET.

LFG SURFACE COLLECTOR TRENCH CROSS SECTION

DETAIL 3 / LFG2
NOT TO SCALE

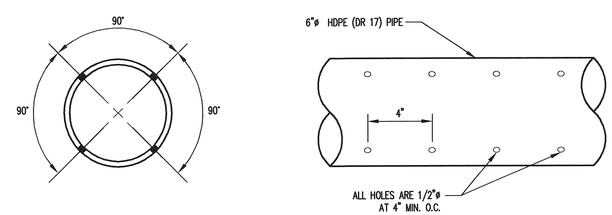

LANDFILL GAS PIPING

HDPE PIPE PERFORATIONS – LFG

DETAIL 4 / LFG2
NOT TO SCALE

DATE	NO.	REVISION
11/08	1	RESPONSE TO NODENR COMMENTS AND ADDITIONAL CHANGES

RICHARDSON SMITH GARDNER & ASSOCIATES
Engineering and Geological Services
14 N. Boylan Ave.
Raleigh, N.C. 27603
ph: 919-828-0577
fax: 919-828-3899
www.rsgengineers.com

SEAL

SEAL

PROJECT TITLE:
JOHNSTON COUNTY MSW LANDFILL
PHASE 4A - CELL 3
PERMIT AMENDMENT DRAWINGS

DRAWING TITLE:
LANDFILL GAS MANAGEMENT
DETAILS
(SHEET 1 OF 3)

DESIGNED BY: P.K.S.	DRAWN BY: J.A.L.
CHECKED BY:	PROJECT NO.: JOHN 07-2
SCALE: AS SHOWN	DATE: JUNE 2007
FILE NAME JOHN-D0498A	
SHEET NO. 17	DRAWING NO. LFG2

G:\CAD\Johnston\John 07-2\rev 1\02105\sheets\JOHN-D0498A.dwg - 11/11/2008 4:24 PM

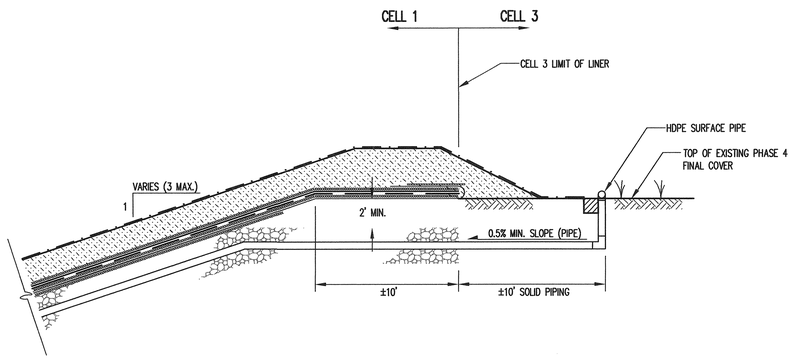

TYPICAL EXISTING LFG PIPING

DETAIL 1 / LFG3
NOT TO SCALE

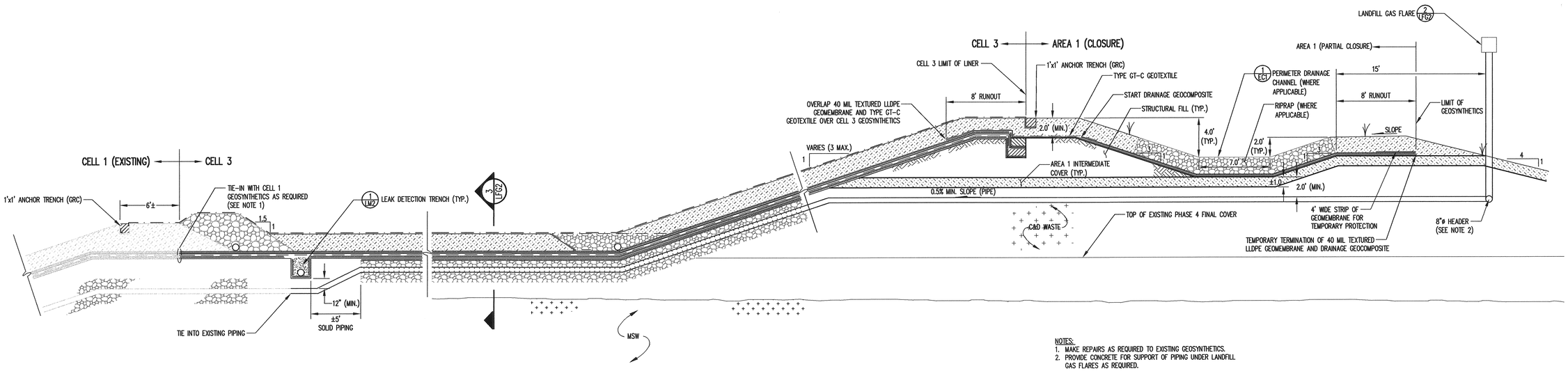

NOTES:
1. MAKE REPAIRS AS REQUIRED TO EXISTING GEOSYNTHETICS.
2. PROVIDE CONCRETE FOR SUPPORT OF PIPING UNDER LANDFILL GAS FLARES AS REQUIRED.

LFG PIPING CROSS SECTION

DETAIL 2 / LFG3
NOT TO SCALE

NO.	REVISION	DATE
1	RESPONSE TO NCDENR COMMENTS AND ADDITIONAL CHANGES	11/08

RICHARDSON SMITH GARDNER & ASSOCIATES
Engineering and Geological Services
14 N. Boylan Ave.
Raleigh, N.C. 27603
www.rsgengineers.com
ph: 919-828-0577
fax: 919-828-3899

SEAL

SEAL

PROJECT TITLE: JOHNSTON COUNTY MSW LANDFILL PHASE 4A - CELL 3 PERMIT AMENDMENT DRAWINGS

DRAWING TITLE: LANDFILL GAS MANAGEMENT DETAILS (SHEET 2 OF 3)

DESIGNED BY: P.K.S.	DRAWN BY: J.A.L.
CHECKED BY:	PROJECT NO.: JOHN 07-2
SCALE: AS SHOWN	DATE: JUNE 2007
FILE NAME: JOHN-D0499A	
SHEET NO. 18	DRAWING NO. LFG3

G:\CADD.Johnston\John 07-2\rev 102108\sheets\JOHN-D0499A.dwg - 11/19/2008 11:41 AM

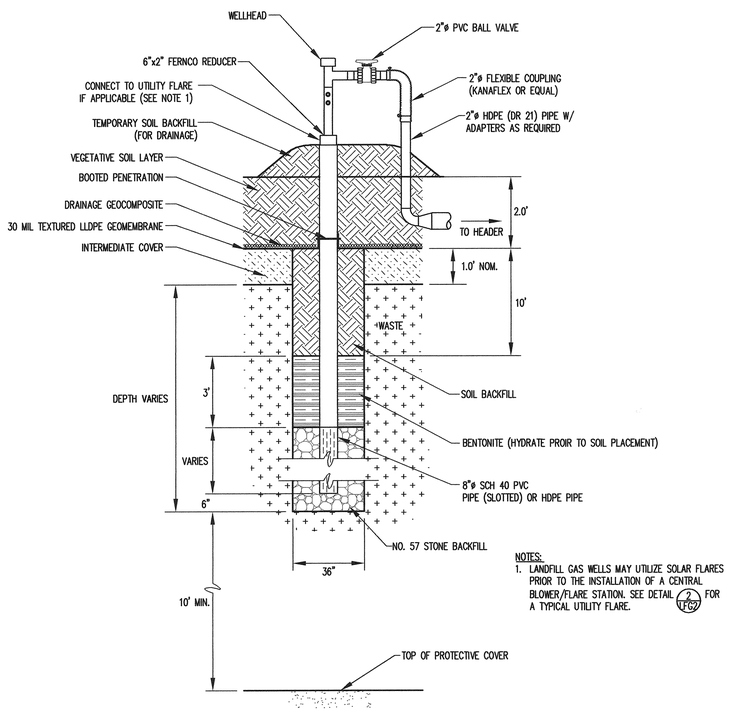

NOTES:
1. LANDFILL GAS WELLS MAY UTILIZE SOLAR FLARES PRIOR TO THE INSTALLATION OF A CENTRAL BLOWER/FLARE STATION. SEE DETAIL 2/LFG4 FOR A TYPICAL UTILITY FLARE.

TYPICAL LANDFILL GAS WELL

DETAIL 1/LFG4
NOT TO SCALE

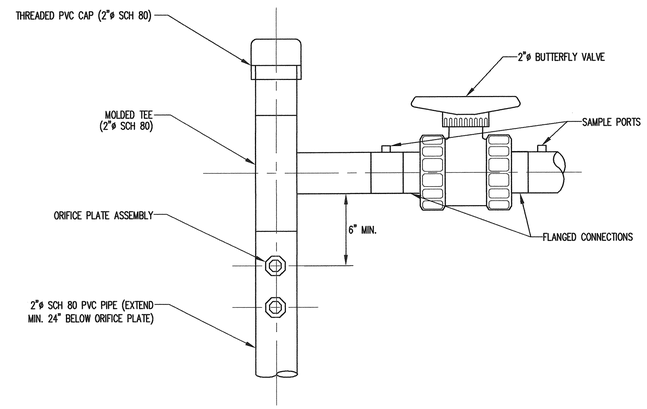

TYPICAL WELLHEAD

DETAIL 2/LFG4
NOT TO SCALE

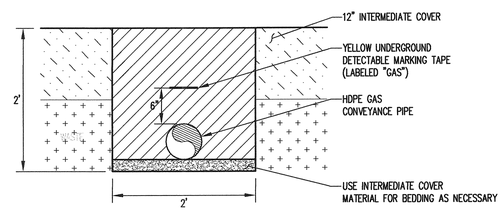

GAS CONVEYANCE PIPE TRENCH

DETAIL 3/LFG4
NOT TO SCALE

NO.	DATE	REVISION

RICHARDSON SMITH GARDNER & ASSOCIATES
Engineering and Geological Services
14 N. Boylan Ave.
Raleigh, N.C. 27603
ph: 919-828-0577
fax: 919-828-3899
www.rsgengineers.com

SEAL

SEAL

PROJECT TITLE:
JOHNSTON COUNTY MSW LANDFILL
PHASE 4A - CELL 3
PERMIT AMENDMENT DRAWINGS

DRAWING TITLE:
LANDFILL GAS MANAGEMENT DETAILS
(SHEET 3 OF 3)

DESIGNED BY: P.K.S.	DRAWN BY: J.A.L.
CHECKED BY:	PROJECT NO.: JOHN 07-2
SCALE: AS SHOWN	DATE: JUNE 2007
FILE NAME: JOHN-D0500	
SHEET NO. 19	DRAWING NO. LFG4

G:\CAD\Johnston\John 07-2\sheets\JOHN-D0500.dwg - 5/10/2007 10:46 AM

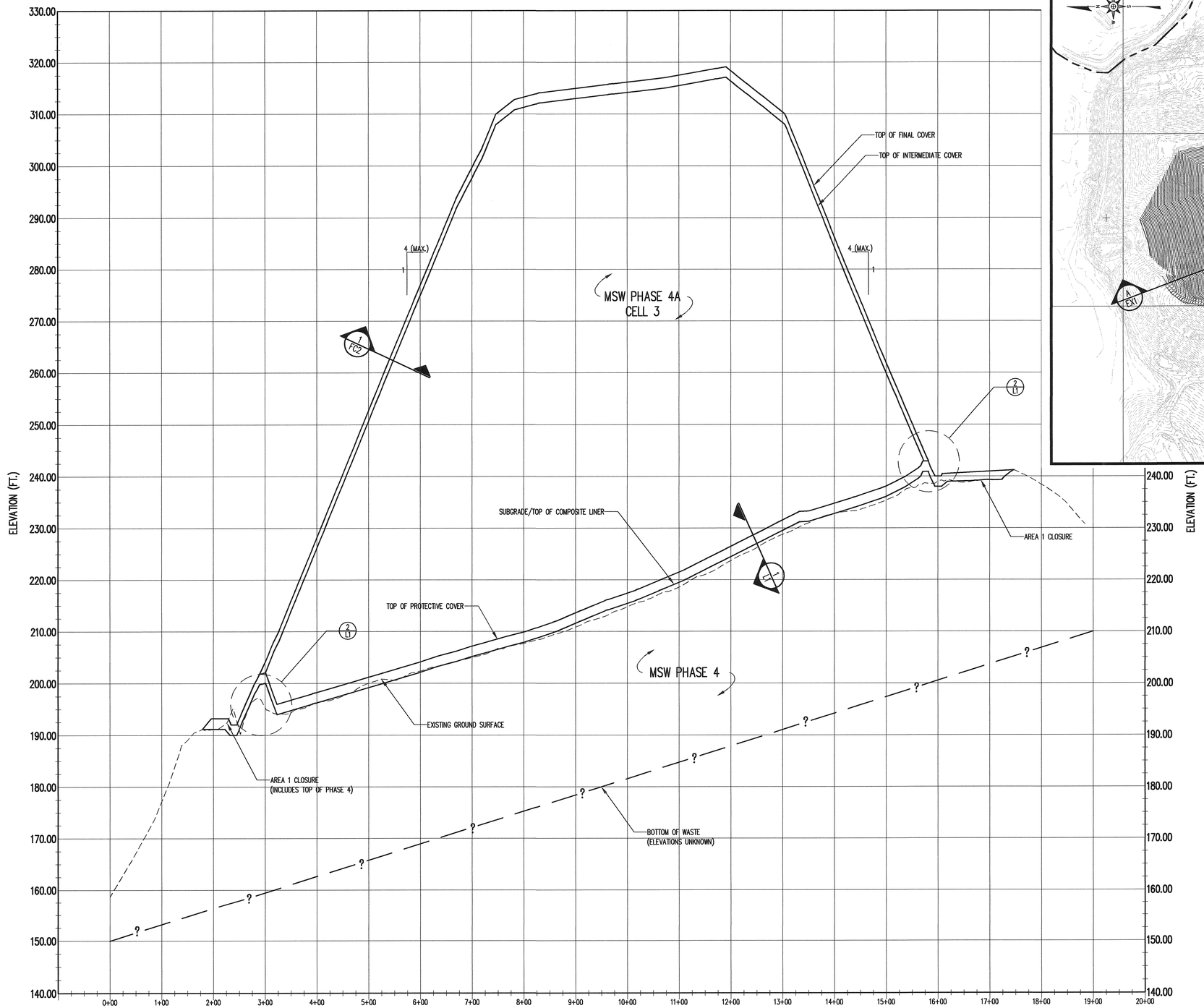

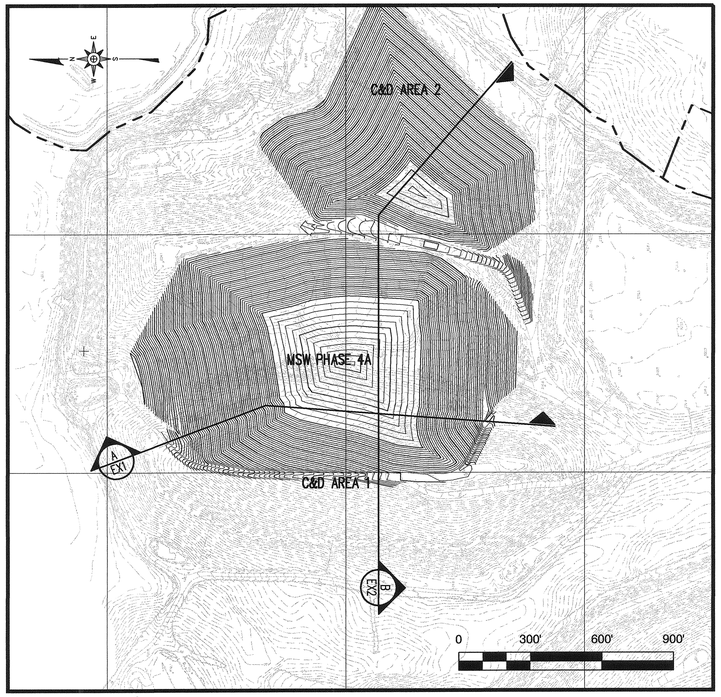

SECTION A

SECTION A / EX1
NOT TO SCALE

LEGEND

- 200 — EXISTING 10' CONTOUR
- EXISTING 2' CONTOUR
- 150 — PROPOSED 10' CONTOUR
- PROPOSED 2' CONTOUR
- PROPERTY LINE

REFERENCES

1. OVERALL SITE TOPOGRAPHY PROVIDED BY GEODATA CORP., BASED ON JUNE 6, 2008 AERIAL PHOTOGRAPHY.

30' 20' 10' 0

0 100' 200' 300'

DATE	NO.	REVISION
11/08	1	RESPONSE TO NCDENR COMMENTS AND ADDITIONAL CHANGES

RICHARDSON SMITH GARDNER & ASSOCIATES
Engineering and Geological Services
14 N. Boylan Ave.
Raleigh, N.C. 27603
ph: 919-828-0577
fax: 919-828-3899
www.rsgengineers.com

SEAL

SEAL

PROJECT TITLE:
JOHNSTON COUNTY MSW LANDFILL
PHASE 4A - CELL 3
PERMIT AMENDMENT DRAWINGS

DRAWING TITLE:
ENGINEERING CROSS SECTIONS
(SHEET 1 OF 2)

DESIGNED BY: P.K.S.	DRAWN BY: J.A.L.
CHECKED BY:	PROJECT NO.: JOHN 07-2
SCALE: AS SHOWN	DATE: JUNE 2007
FILE NAME: JOHN-D0501A	
SHEET NO. 20	DRAWING NO. EX1

G:\CAD\Johnston\John 07-2\rev 102108\sheets\JOHN-D0501A.dwg - 11/12/2008 7:58 AM

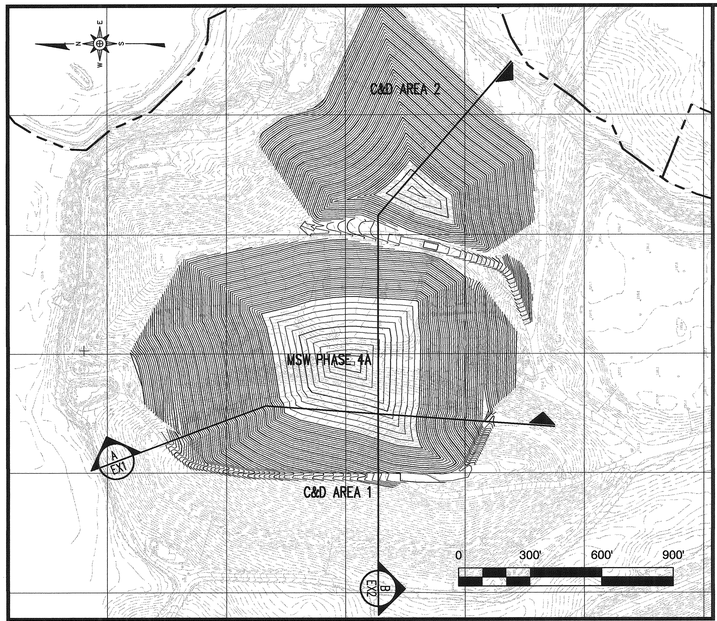

SECTION B

SECTION B / EX2
NOT TO SCALE

LEGEND

- EXISTING 10' CONTOUR
- EXISTING 2' CONTOUR
- PROPOSED 10' CONTOUR
- PROPOSED 2' CONTOUR
- PROPERTY LINE

NOTES

1. EXISTING FINAL COVER SYSTEM AT TOP OF PHASE 3 CONSISTS OF 18" MIN. VEGETATIVE SOIL LAYER OVER DRAINAGE GEOCOMPOSITE AND GCL.

REFERENCES

1. OVERALL SITE TOPOGRAPHY PROVIDED BY GEODATA CORP., BASED ON JUNE 6, 2008 AERIAL PHOTOGRAPHY.

0 100' 200' 300'

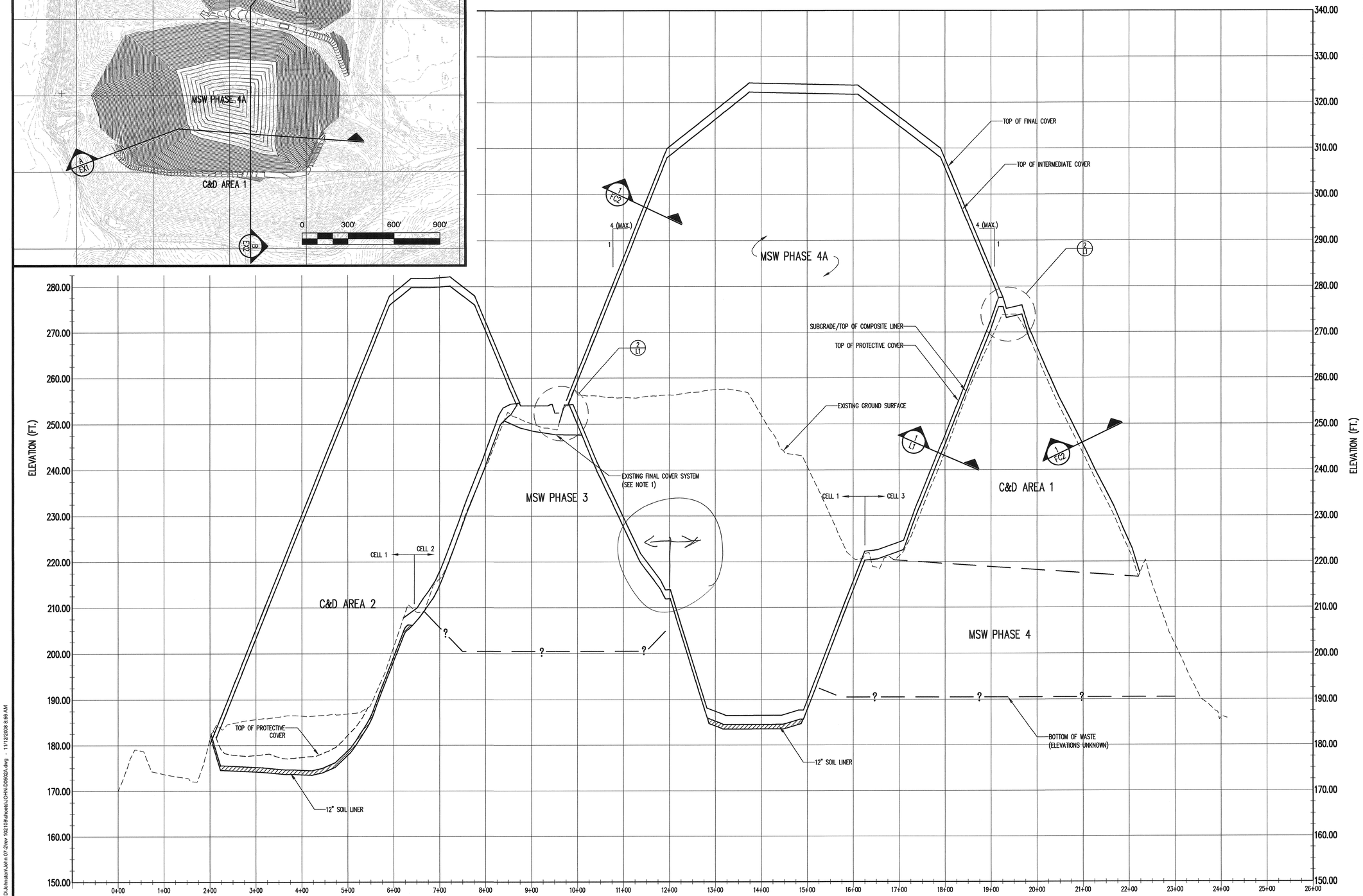

NO.	DATE	REVISION
1	11/08	RESPONSE TO NODENR COMMENTS AND ADDITIONAL CHANGES

RICHARDSON SMITH GARDNER & ASSOCIATES
Engineering and Geological Services
14 N. Boylan Ave.
Raleigh, N.C. 27603
ph: 919-828-0577
fax: 919-828-3899
www.rsgengineers.com

SEAL

SEAL

PROJECT TITLE:
JOHNSTON COUNTY MSW LANDFILL
PHASE 4A - CELL 3
PERMIT AMENDMENT DRAWINGS

DRAWING TITLE:
ENGINEERING CROSS SECTIONS
(SHEET 2 OF 2)

DESIGNED BY: P.K.S.	DRAWN BY: J.A.L.
CHECKED BY:	PROJECT NO.: JOHN 07-2
SCALE: AS SHOWN	DATE: JUNE 2007
FILE NAME: JOHN-D0502A	
SHEET NO. 21	DRAWING NO. EX2

G:\CAD\Johnston\John 07-2\rev 10210\Sheets\JOHN-D0502A.dwg - 11/12/2008 8:56 AM

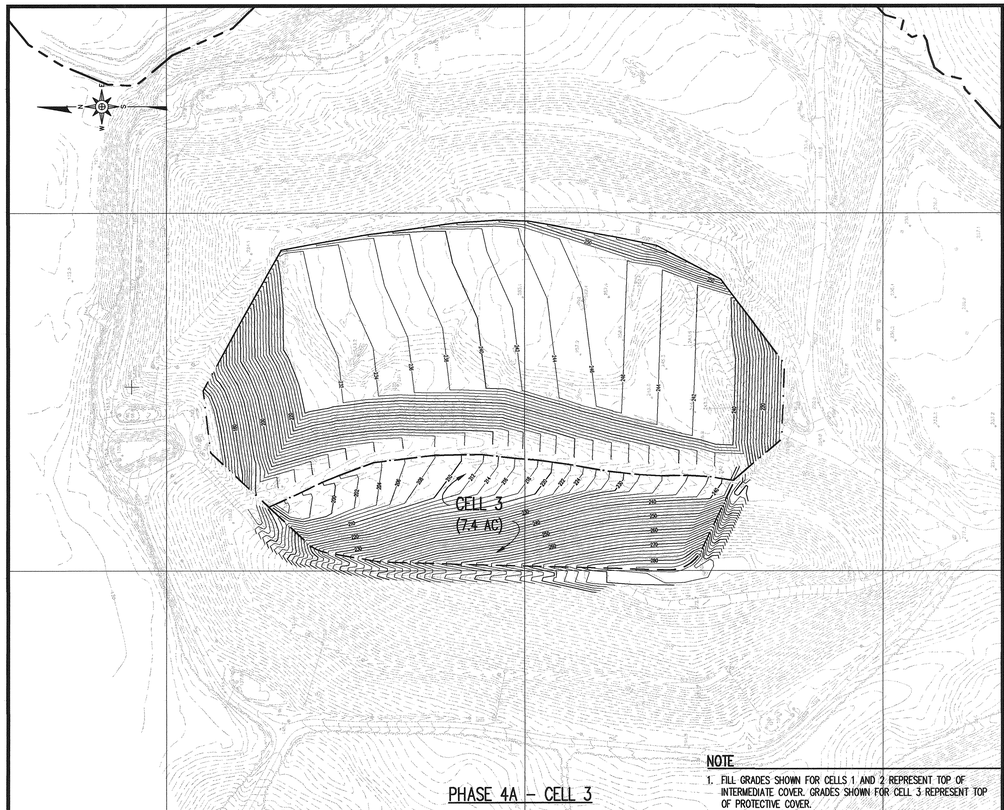

PHASE 4A – CELL 3

NOTE

1. FILL GRADES SHOWN FOR CELLS 1 AND 2 REPRESENT TOP OF INTERMEDIATE COVER. GRADES SHOWN FOR CELL 3 REPRESENT TOP OF PROTECTIVE COVER.

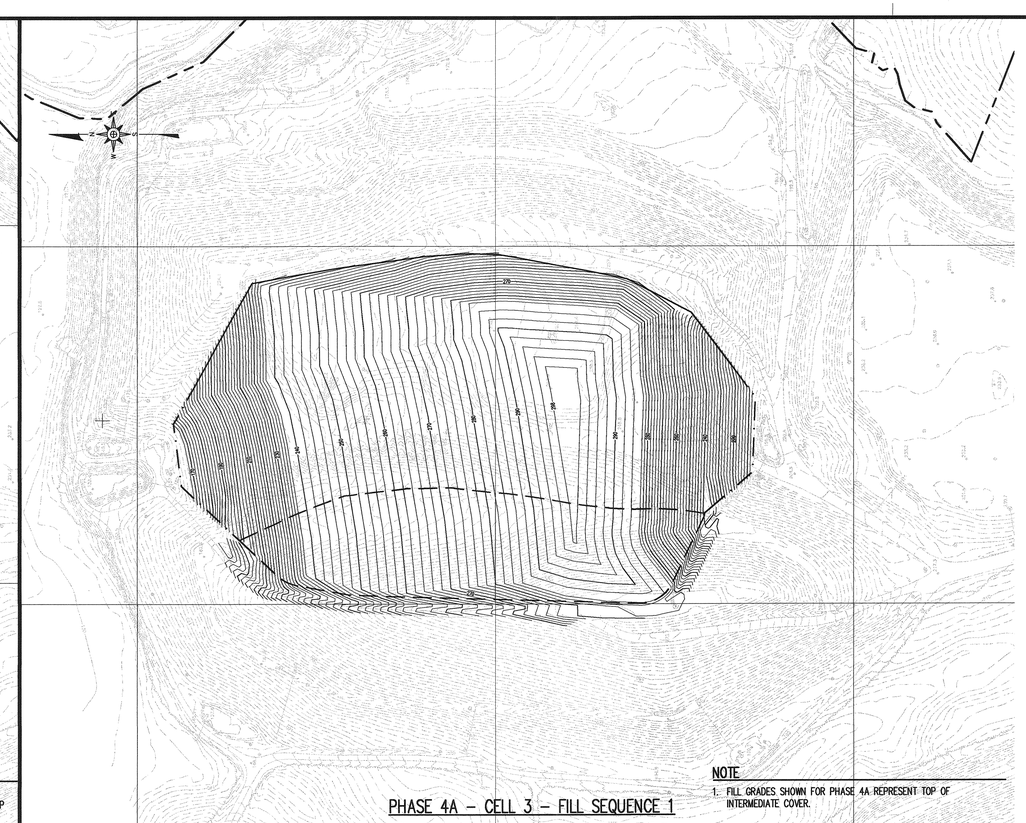

PHASE 4A – CELL 3 – FILL SEQUENCE 1

NOTE

1. FILL GRADES SHOWN FOR PHASE 4A REPRESENT TOP OF INTERMEDIATE COVER.

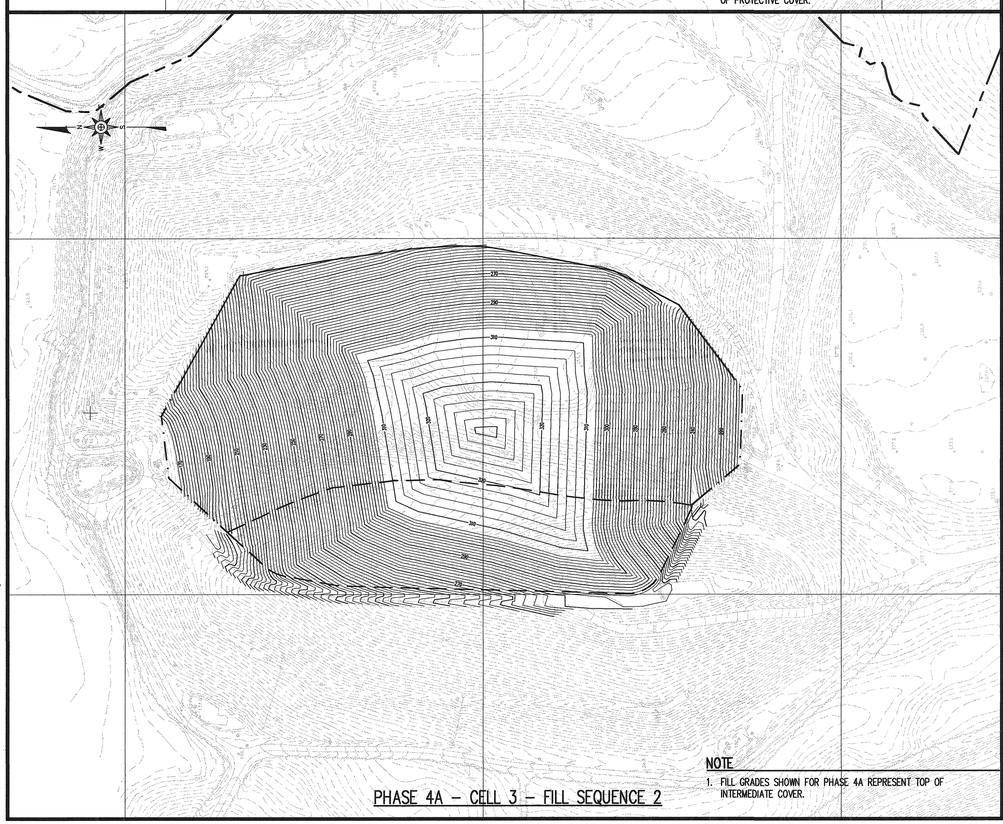

PHASE 4A – CELL 3 – FILL SEQUENCE 2

NOTE

1. FILL GRADES SHOWN FOR PHASE 4A REPRESENT TOP OF INTERMEDIATE COVER.

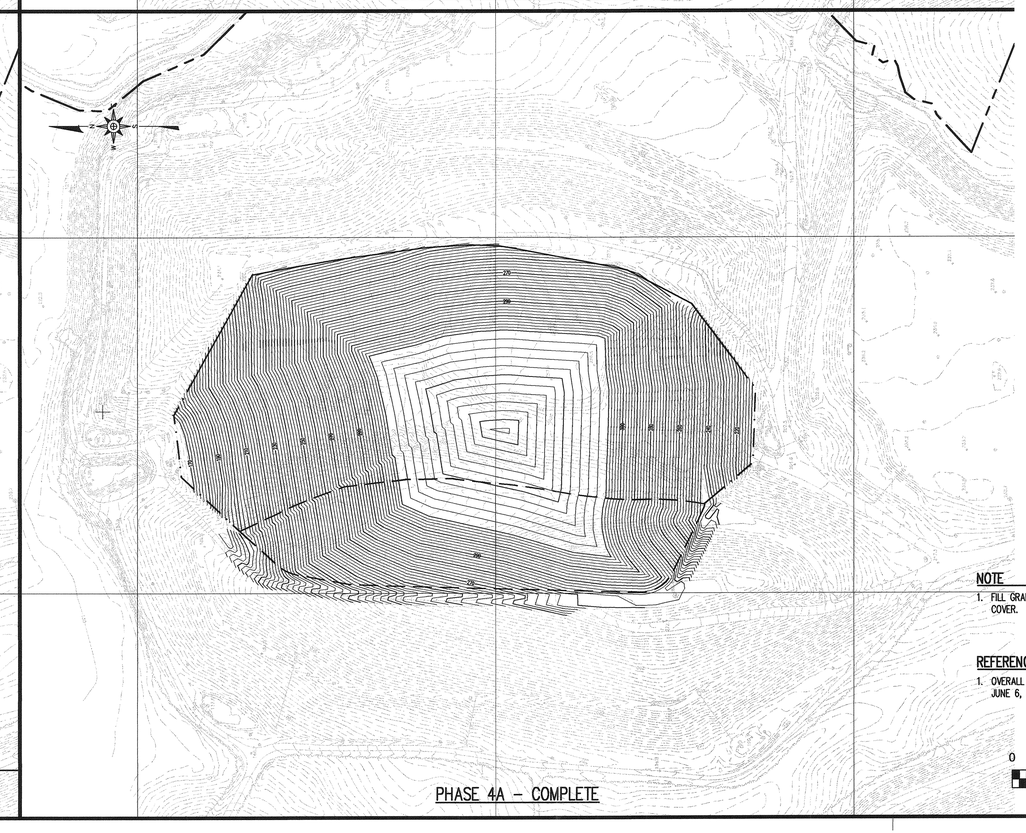

PHASE 4A – COMPLETE

NOTE

1. FILL GRADES SHOWN FOR PHASE 4A REPRESENT TOP OF FINAL COVER.

REFERENCE

1. OVERALL SITE TOPOGRAPHY PROVIDED BY GEODATA CORP., BASED ON JUNE 6, 2008 AERIAL PHOTOGRAPHY.

0 200' 400' 600'

DATE	NO.	REVISION
11/08	1	RESPONSE TO NCDENR COMMENTS AND ADDITIONAL CHANGES

RICHARDSON SMITH GARDNER & ASSOCIATES
Engineering and Geological Services
14 N. Boylan Ave.
Raleigh, N.C. 27603
www.rsgengineers.com
ph: 919-828-0577
fax: 919-828-3899

SEAL

SEAL

PROJECT TITLE:
JOHNSTON COUNTY MSW LANDFILL
PHASE 4A - CELL 3
PERMIT AMENDMENT DRAWINGS

DRAWING TITLE:
MSW LANDFILL PHASING PLAN
(SHEET 1 OF 3)

DESIGNED BY: P.K.S.	DRAWN BY: J.A.L.
CHECKED BY:	PROJECT NO.: JOHN 07-2
SCALE: AS SHOWN	DATE: JUNE 2007
FILE NAME: JOHN-D0503A	
SHEET NO. 22	DRAWING NO. P1

G:\CAD-Johnston\John 07-2\rev 102108\sheets\JOHN-D0503A.dwg - 11/24/2008 9:23 AM

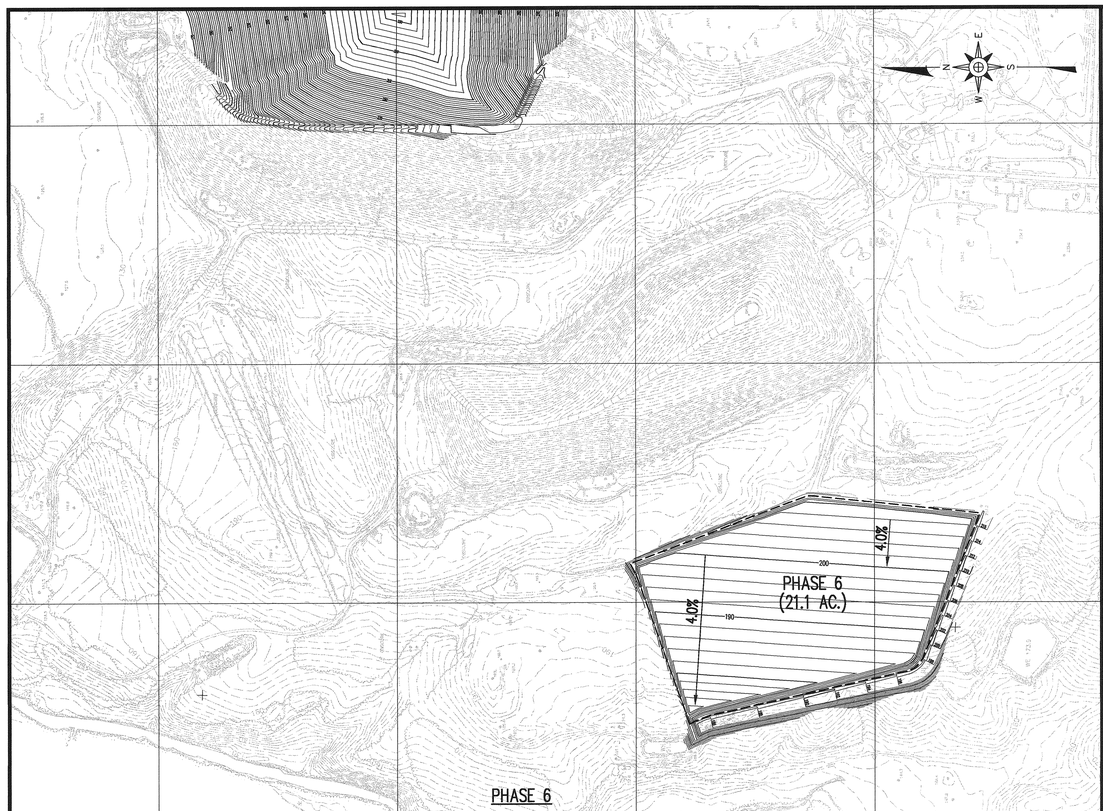

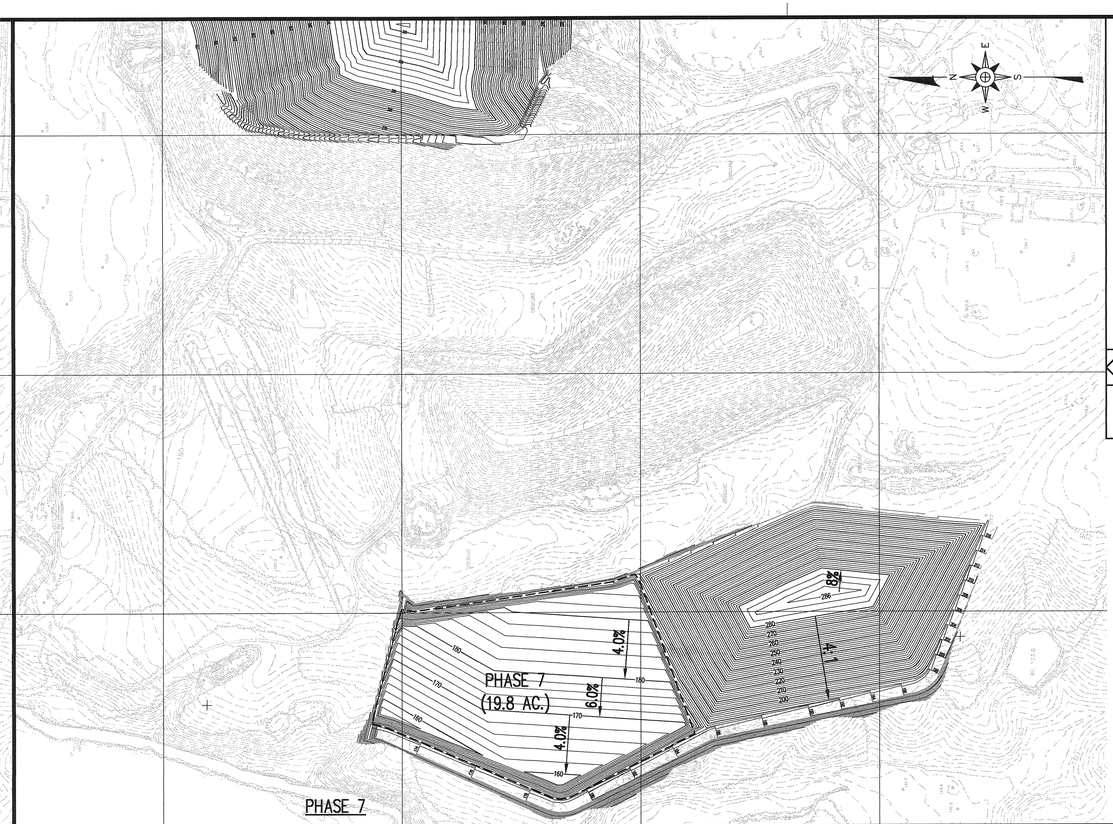

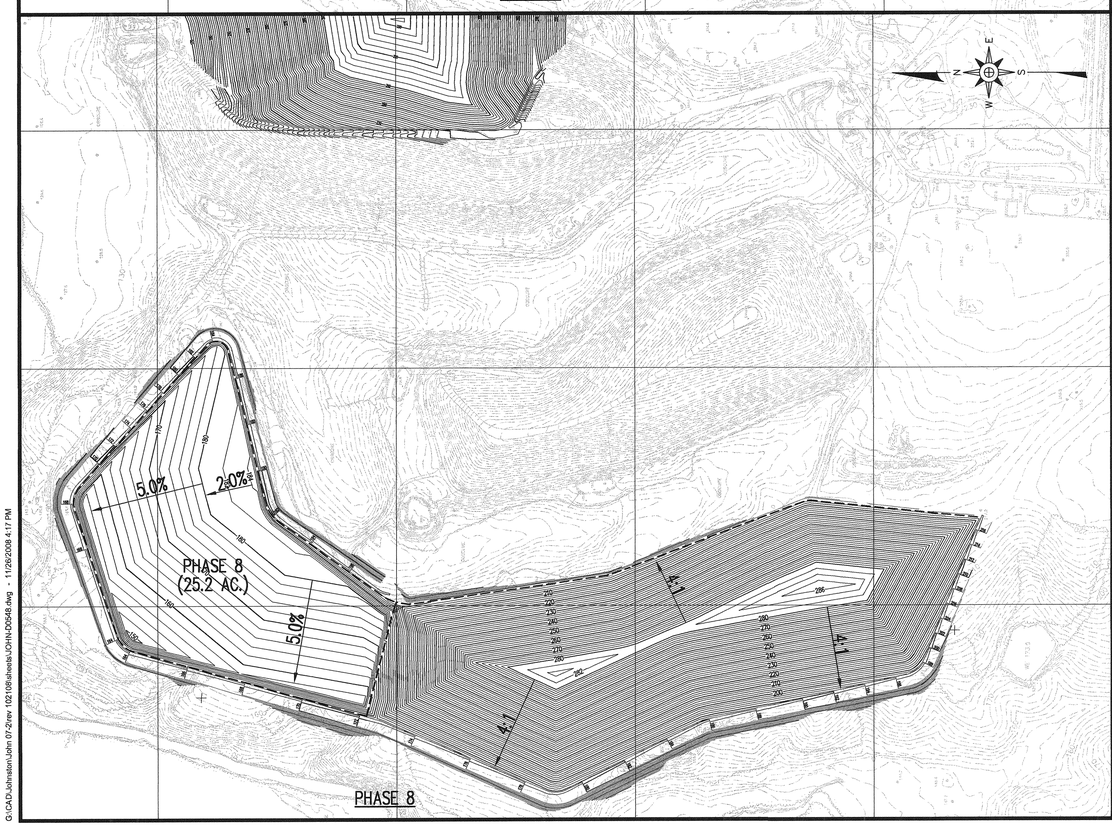

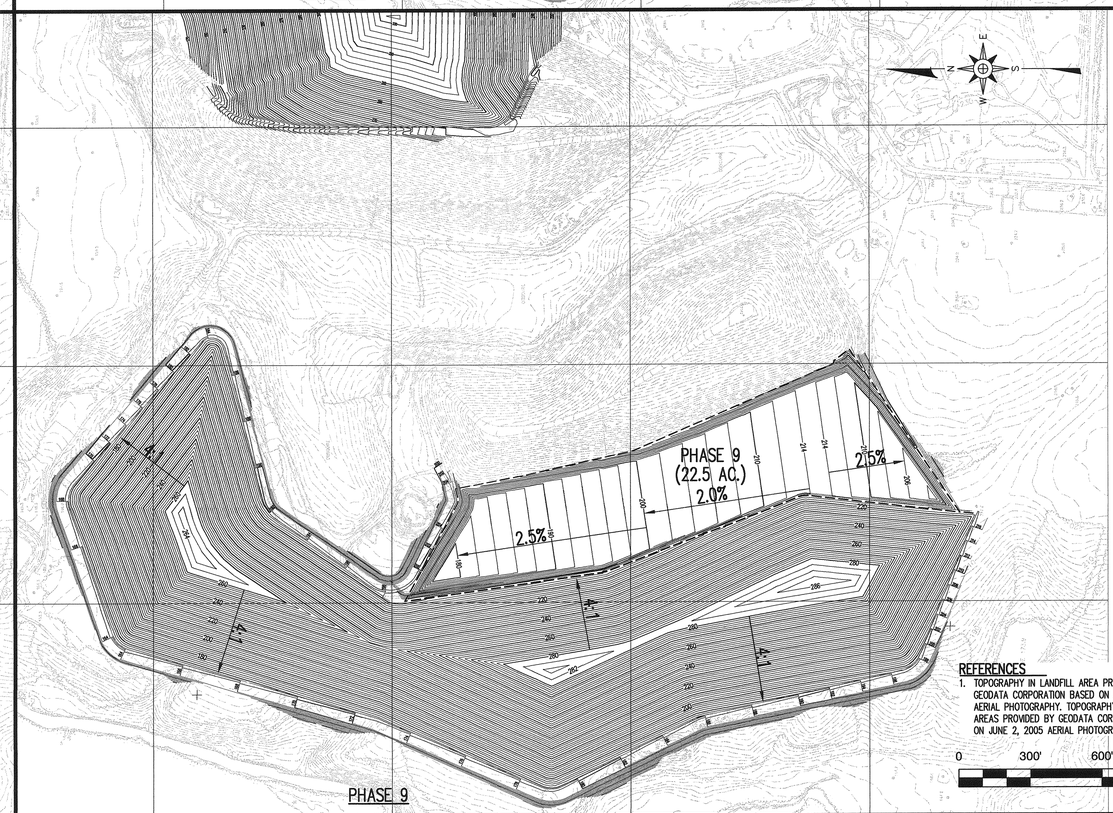

REFERENCES

1. TOPOGRAPHY IN LANDFILL AREA PROVIDED BY GEODATA CORPORATION BASED ON JUNE 6, 2008 AERIAL PHOTOGRAPHY. TOPOGRAPHY IN OTHER AREAS PROVIDED BY GEODATA CORPORATION BASED ON JUNE 2, 2005 AERIAL PHOTOGRAPHY.

0 300' 600' 900'

DATE	NO.	REVISION
11/08	1	RESPONSE TO NCDENR COMMENTS AND ADDITIONAL CHANGES

RICHARDSON SMITH GARDNER & ASSOCIATES
Engineering and Geological Services
14 N. Boylan Ave.
Raleigh, N.C. 27603
ph: 919-828-0577
fax: 919-828-3899
www.rsgengineers.com

SEAL

SEAL

PROJECT TITLE:
JOHNSTON COUNTY MSW LANDFILL
PHASE 4A - CELL 3
PERMIT AMENDMENT DRAWINGS

DRAWING TITLE:
MSW LANDFILL PHASING PLAN
(SHEET 2 OF 3)

DESIGNED BY: P.K.S.	DRAWN BY: J.A.L.
CHECKED BY:	PROJECT NO.: JOHN 07-2
SCALE: AS SHOWN	DATE: JUNE 2007
FILE NAME: JOHN-D0548	
SHEET NO. 23	DRAWING NO. P2

G:\CAD\Johnston\John 07-2\rev 102109\sheets\JOHN-D0548.dwg - 11/26/2008 4:17 PM

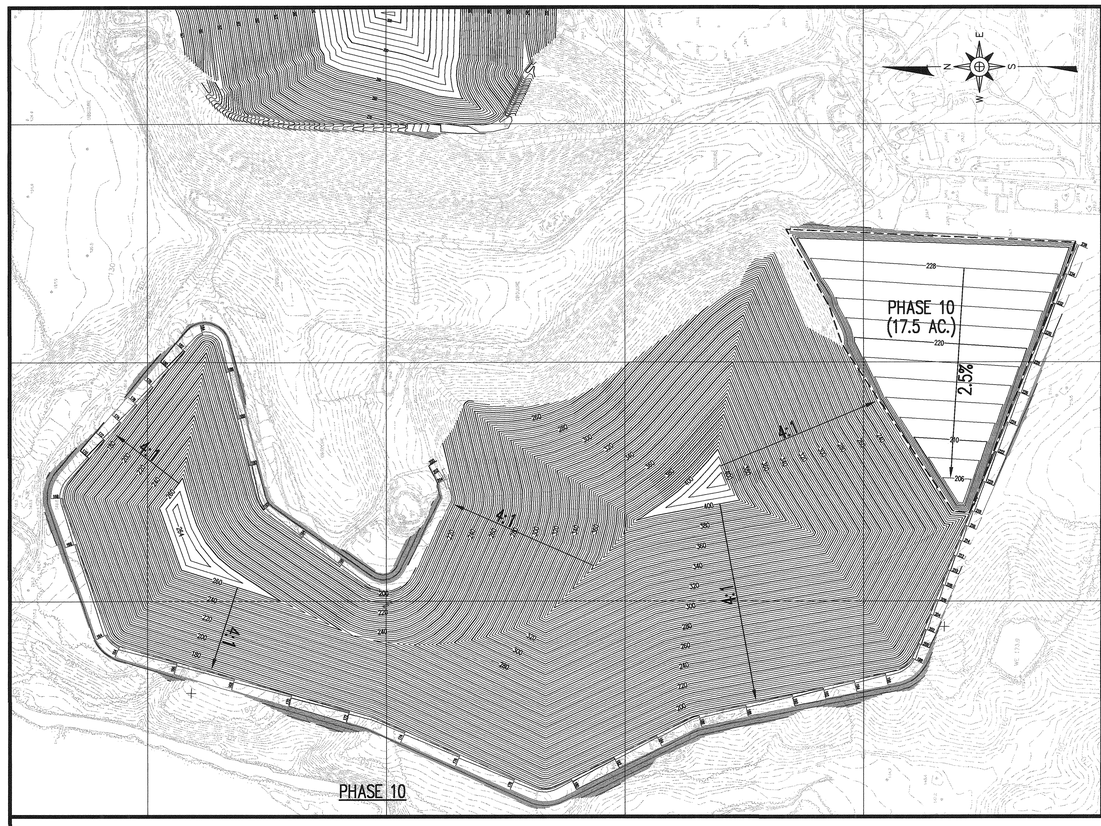

PHASE 10

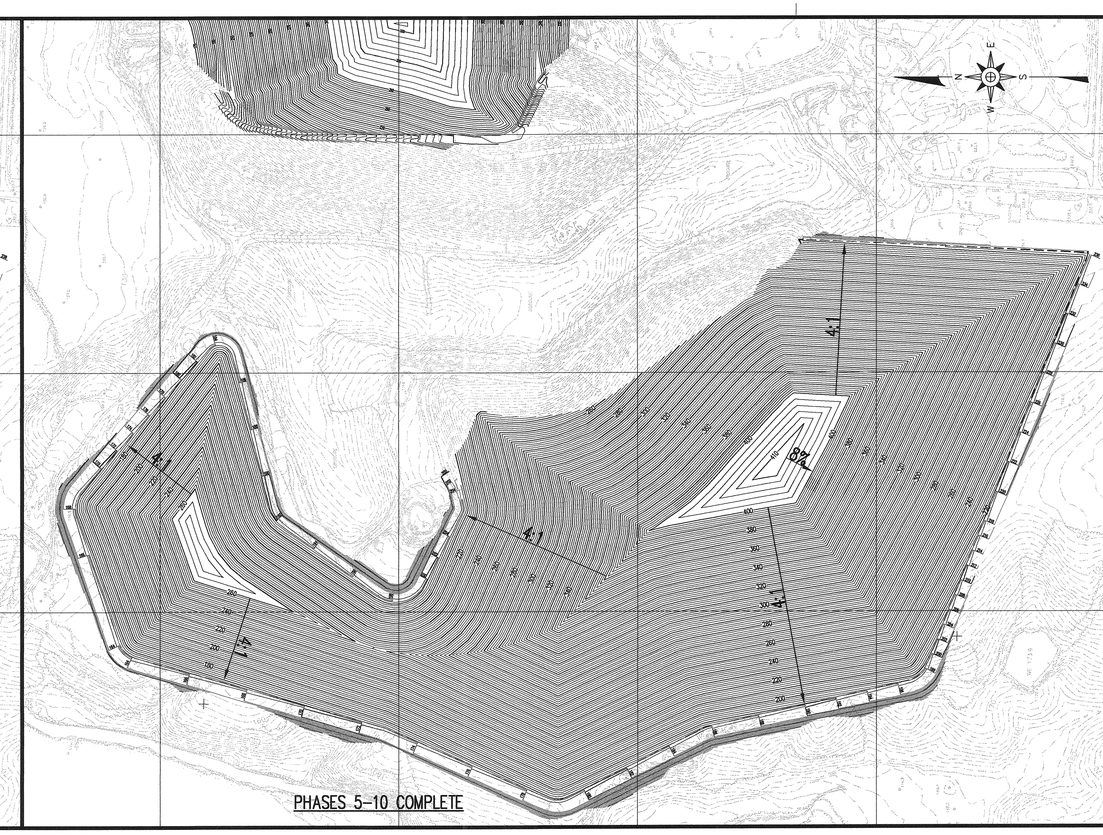

PHASES 5–10 COMPLETE

REFERENCES

1. TOPOGRAPHY IN LANDFILL AREA PROVIDED BY GEODATA CORPORATION BASED ON JUNE 6, 2008 AERIAL PHOTOGRAPHY. TOPOGRAPHY IN OTHER AREAS PROVIDED BY GEODATA CORPORATION BASED ON JUNE 2, 2005 AERIAL PHOTOGRAPHY.

0 300' 600' 900'

DATE	NO.	REVISION
11/08	1	RESPONSE TO NCDENR COMMENTS AND ADDITIONAL CHANGES

RICHARDSON SMITH GARDNER & ASSOCIATES
Engineering and Geological Services
14 N. Boylan Ave.
Raleigh, N.C. 27603
ph: 919-828-0577
fax: 919-828-3899
www.rsgengineers.com

SEAL:

PROJECT TITLE:
JOHNSTON COUNTY MSW LANDFILL
PHASE 4A - CELL 3
PERMIT AMENDMENT DRAWINGS

DRAWING TITLE:
MSW LANDFILL PHASING PLAN
(SHEET 3 OF 3)

DESIGNED BY: P.K.S.	DRAWN BY: J.A.L.
CHECKED BY:	PROJECT NO.: JOHN 07-2
SCALE: AS SHOWN	DATE: JUNE 2007
FILE NAME JOHN-D0549	
SHEET NO. 24	DRAWING NO. P3

G:\CAD\Johnston\John 07-2\rev 102108\sheets\JOHN-D0549.dwg - 11/26/2008 4:20 PM

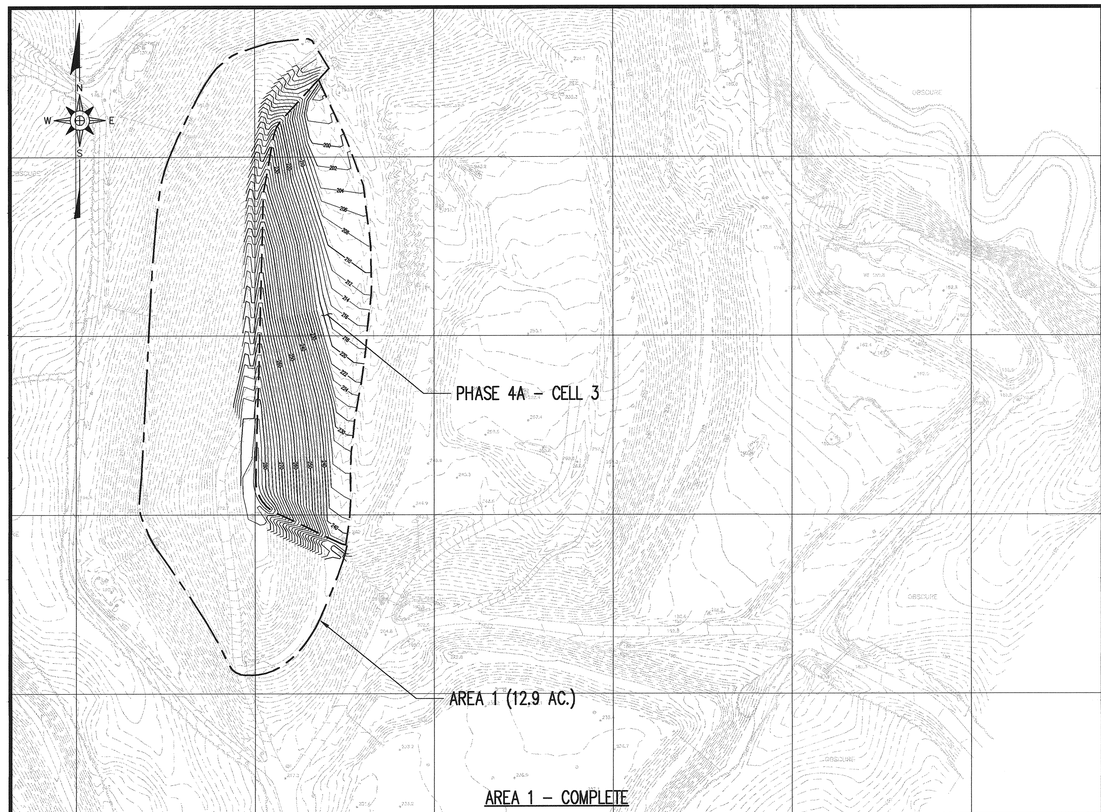

AREA 1 - COMPLETE

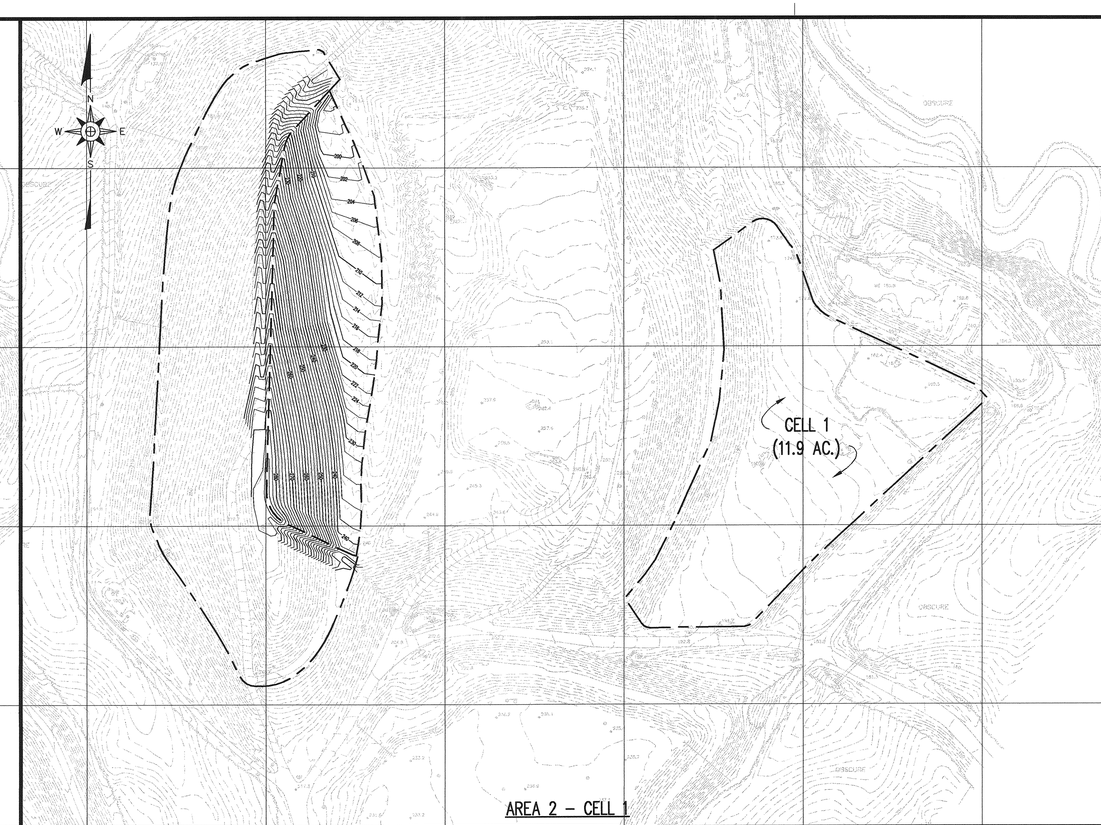

AREA 2 - CELL 1

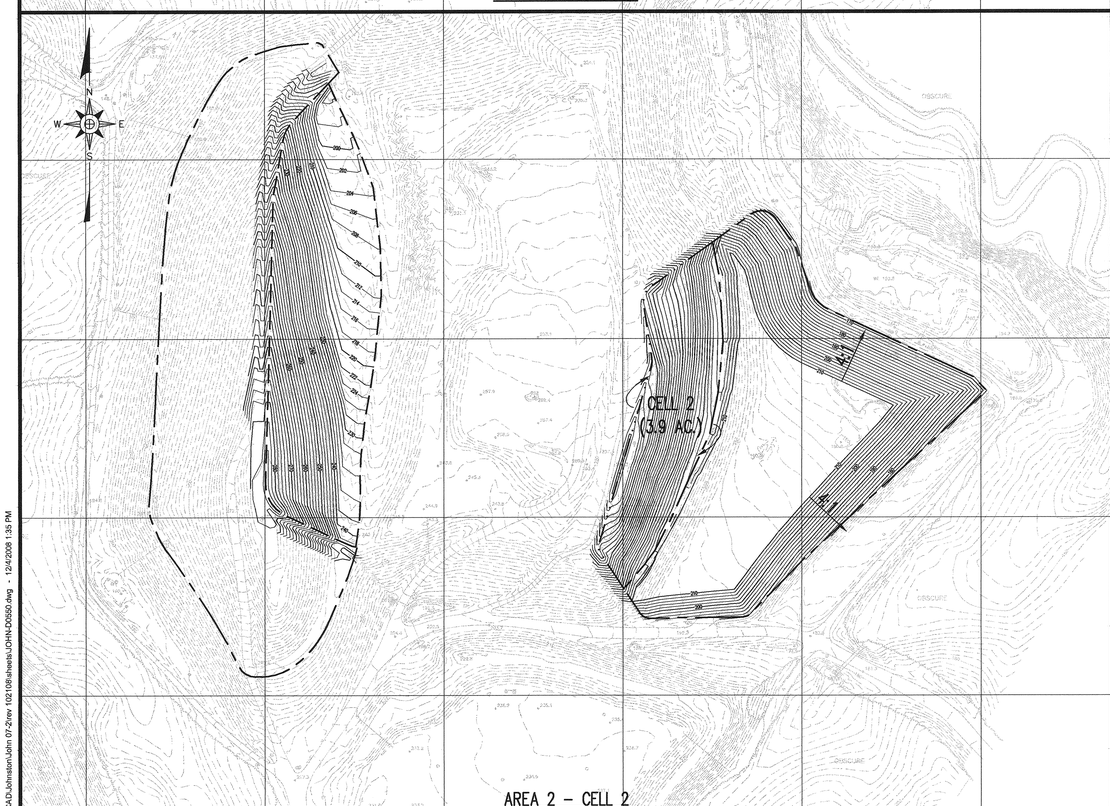

AREA 2 - CELL 2

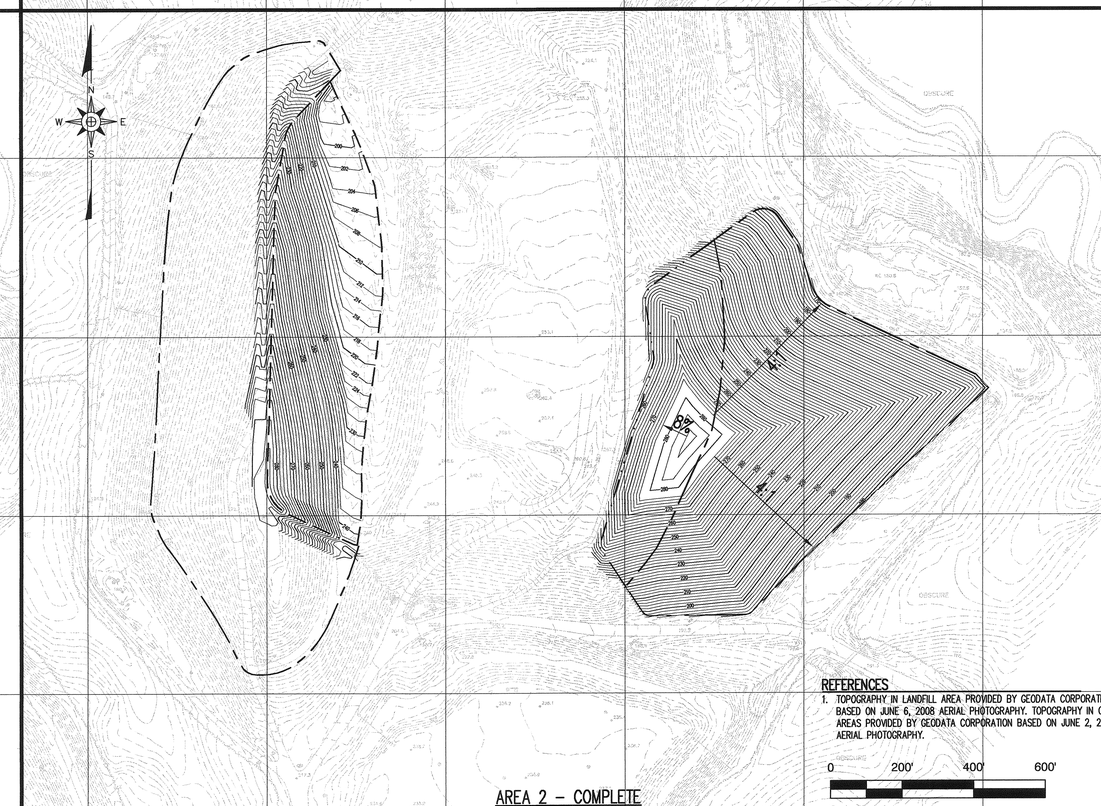

AREA 2 - COMPLETE

REFERENCES

1. TOPOGRAPHY IN LANDFILL AREA PROVIDED BY GEODATA CORPORATION BASED ON JUNE 6, 2008 AERIAL PHOTOGRAPHY. TOPOGRAPHY IN OTHER AREAS PROVIDED BY GEODATA CORPORATION BASED ON JUNE 2, 2005 AERIAL PHOTOGRAPHY.

0 200' 400' 600'

DATE	NO.	REVISION
11/08	1	RESPONSE TO NCDENR COMMENTS AND ADDITIONAL CHANGES

RICHARDSON SMITH GARDNER & ASSOCIATES
Engineering and Geological Services
14 N. Boylan Ave.
Raleigh, N.C. 27603
www.rsgengineers.com
ph: 919-828-0577
fax: 919-828-3899

SEAL

SEAL

PROJECT TITLE:
JOHNSTON COUNTY MSW LANDFILL
PHASE 4A - CELL 3
PERMIT AMENDMENT DRAWINGS

DRAWING TITLE:
C&D LANDFILL PHASING PLAN

DESIGNED BY: P.K.S.	DRAWN BY: J.A.L.
CHECKED BY:	PROJECT NO.: JOHN 07-2
SCALE: AS SHOWN	DATE: JUNE 2007
FILE NAME: JOHN-D0550	
SHEET NO. 25	DRAWING NO. P4

G:\CAD\Johnston\John 07-2\rev 102108\sheets\JOHN-D0550.dwg - 12/4/2008 1:35 PM