Construction Quality Assurance Report

Johnston County C&D Landfill - Area 1 Closure
Smithfield, North Carolina

Prepared For:

Johnston County Department of Public Utilities
309 E. Market Street
Smithfield, North Carolina 27577

Prepared By:

RICHARDSON SMITH GARDNER
& ASSOCIATES
ENGINEERING & GEOLOGICAL
14 N. BOYLAN AVENUE
RALEIGH, NORTH CAROLINA 27603
NC LIC. NO. C-0828 (ENGINEERING)

July 2011

RICHARDSON SMITH GARDNER & ASSOCIATES
Engineering and Geological Services

TRANSMITTAL FORM

If enclosures are not as noted or
if you require additional information,
please notify us immediately

September 16, 2011

By: US Mail [ ]
Overnight Mail [ ]
Hand [X]
Other [ ]

Ms. Donna Wilson
NCDENR Division of Waste Management
401 Oberlin Road, Suite 150
Raleigh, NC 27605
(919) 508-8400

SUBJECT: **Johnston County C&D Landfill - Area 1 Closure**

RSG PROJECT NO: **JOHNSTON-09-5**

We are sending you the following items:

COPIES	ITEM	DESCRIPTION
1	Binder	Area 1 Closure CQA Report

These are transmitted as checked below:

[ ] For Information
[ ] As Requested
[ ] For Review and Comments
[ ] For Revision
[X] For Approval
[ ] Approved
[ ] Approved as Noted
[ ] Approved as Noted-Revise and Resubmit
[ ] Not Approved-Revise and Resubmit
[ ] For Record and File
[ ] Submittal
[ ] For Recording

REMARKS: Donna: Just let me know if you have any questions or need anything further. I can provide a pdf copy as well. Let me know if you would prefer to have this now or later after your review. Thanks!

cc:

Pieter K. Scheer, P.E.

Construction Quality Assurance Report

Johnston County C&D Landfill - Area 1 Closure
Smithfield, North Carolina

Prepared For:

Johnston County Department of Public Utilities
309 E. Market Street
Smithfield, North Carolina 27577

Prepared By:

RICHARDSON SMITH GARDNER
& ASSOCIATES
ENGINEERING & GEOLOGICAL
SERVICES
14 N. BOYLAN AVENUE
RALEIGH, NORTH CAROLINA 27603
NC LIC. NO. C-0828 (ENGINEERING)

July 2011

CONSTRUCTION QUALITY ASSURANCE REPORT

Johnston County C&D Landfill - Area 1 Closure
Smithfield, North Carolina

Prepared for:
Johnston County Dept. of Public Utilities
Smithfield, North Carolina

RSG Project No. JOHNSTON-09-5

Pieter K. Scheer, P.E.
Principal, Senior Engineer

7/15/2011

July 2011

RICHARDSON SMITH GARDNER
& ASSOCIATES
ENGINEERING & GEOLOGICAL
SERVICES

14 N. BOYLAN AVENUE
RALEIGH, NORTH CAROLINA 27603
NC LIC. NO. C-0828 (ENGINEERING)

JOHNSTON COUNTY C&D LANDFILL
AREA 1 CLOSURE

CONSTRUCTION QUALITY ASSURANCE REPORT

TABLE OF CONTENTS

Page

1.0 INTRODUCTION 1

2.0 PROJECT DESCRIPTION 1
2.1 General 1
2.2 Reference Documents 1
2.3 Design Modifications 2
2.4 Project Participants 2
2.4.1 Owner 2
2.4.2 Engineer/CQA Engineer 3
2.4.3 CQA Testing - Soils & Geosynthetics 3
2.4.4 Contractor 3
2.4.5 Geosynthetics Installer 4
2.4.6 Contractor's Surveyor 4

3.0 SUMMARY OF CONSTRUCTION ACTIVITIES 4
3.1 Site Preparation 4
3.2 Erosion and Sedimentation Control Measures 4
3.3 Earthwork 4
3.4 Landfill Gas (LFG) Management System 5
3.5 Down Pipes 5
3.6 30 Mil LLDPE Geomembrane 5
3.7 Drainage Geocomposite/Vegetative Soil Layer 5

4.0 CQA PROGRAM 6
4.1 Scope of Services 6

5.0 FINAL COVER SYSTEM CQA 6
5.1 Material Approval 6
5.2 Material Control Testing 7
5.3 Vegetative Soil Layer 7
5.4 Contractor CQC Testing 7

6.0 30 MIL LLDPE GEOMEMBRANE CQA 7
6.1 Material Approval 7
6.2 Manufacturer's Quality Control Submittals 8

Table of Contents (Continued)

Page

6.3 Material Control Testing 8
6.4 Field Seam Control Tests 8
6.5 Field Seam Record Tests 8

7.0 DRAINAGE GEOCOMPOSITE CQA 8
7.1 Material Approval 8
7.2 Manufacturer's Quality Control Submittals 9
7.3 Material Control Testing 9

8.0 GEOTEXTILE CQA 9
8.1 Material Approval 9
8.2 Manufacturer's Quality Control Submittals 9
8.3 Material Control Testing 9

9.0 RECORD DRAWINGS 10

10.0 PROJECT CERTIFICATION 10

TABLES

Table 1 Summary of Material Control Tests - LLDPE Geomembrane
Table 2A Summary of Material Record Tests - LLDPE Geomembrane Seams (2009)
Table 2B Summary of Material Record Tests - LLDPE Geomembrane Seams (2010)
Table 3 Summary of Material Control Tests - Drainage Geocomposite
Table 4 Summary of Material Control Tests - Geotextiles

APPENDICES

Appendix A Reference Documents (Permit)
Appendix B Design Modifications
Appendix C Photographic Log
Appendix D CQA Meeting Minutes
Appendix E Final Cover System CQA Data
E1. Manufacturer's Product Data Submittals and Quality Control Certificates
E2. CQA Test Results - Drainage Aggregate
E3. Soil Test Information (Representative of Borrow Area)
E4. CQC Test Results - Pressure Testing of HDPE Piping
Appendix F Interface Shear Strength Test Data

Table of Contents (Continued)

Appendix G Geomembrane CQA Data
- G1. Manufacturer's Product Data Submittals and Quality Control Certificates
- G2. Geosynthetics Inventory
- G3. CQA Test Results - Material Control Tests
- G4. Field Trial Seam Logs
- G5. Panel Placement Logs
- G6. Panel Seaming Logs (Includes Nondestructive Seam Testing Documentation (Air Pressure Tests))
- G7. CQC Test Results - Destructive Test Logs (Field)
- G8. CQA Test Results - Destructive Seam Testing (Laboratory)
- G9. Repair Logs (Includes Nondestructive Seam Testing Documentation (Vacuum Tests))

Appendix H Drainage Geocomposite CQA Data
- H1. Manufacturer's Product Data Submittals and Quality Control Certificates
- H2. Geosynthetics Inventory - Drainage Geocomposite
- H3. CQA Test Results - Material Control Tests

Appendix I Geotextile CQA Data
- I1. Manufacturer's Product Data Submittals
- I2. Geosynthetics Inventory - Geotextiles
- I3. CQA Test Results - Material Control Tests

Appendix J Record Drawings
- J1. 2009 Geomembrane As-Built (Partial Closure
- J2. 2010 Geomembrane As-Built
- J3. As-Built Topographic Survey

JOHNSTON COUNTY C&D LANDFILL
AREA 1 CLOSURE

CONSTRUCTION QUALITY ASSURANCE REPORT

1.0 INTRODUCTION

This Construction Quality Assurance (CQA) Report has been prepared to document the CQA activities performed during the closure of Area 1 (approximately 12.7 acres) of the Johnston County C&D Landfill. The landfill facility is located on County Home Road off of Highway 210 near Smithfield, North Carolina and is owned and operated by Johnston County under State Solid Waste Permit No. 51-03. A Permit to Construct was issued by the North Carolina Division of Waste Management (NCDWM) on January 16, 2009.

2.0 PROJECT DESCRIPTION

2.1 General

The Area 1 closure consists of the closure of a portion of the Area 1 landfill unit, which overlies the unlined Phase 4 landfill unit. The eastern portion of Area 1 was "closed" in 2009 with the construction of the overlying Phase 4A-Cell 3 landfill unit, which is double-lined. The components of the Area 1 final cover system include the following components (bottom-up):

- prepared intermediate cover;
- textured 30 mil LLDPE geomembrane;
- drainage geocomposite; and
- 24-inch thick (min.) vegetative soil layer.

Approximately 1.5 acres of this final cover profile was completed in 2009 along with the construction of Phase 4A-Cell 3. The remaining approximately 11.2 acres was completed in 2011.

In addition to the final cover system, the Area 1 closure also includes associated landfill gas (LFG), drainage, and erosion and sedimentation control measures.

2.2 Reference Documents

The Area 1 closure was constructed in accordance with the following documents with clarifications and modifications as described in **Section 2.3**.

Construction Documents - Johnston County C&DLF - Area 1 Closure: Includes general and technical specifications, CQA manual, and contract addenda prepared by Richardson Smith Gardner & Associates and dated August, 2010.

Construction Drawings - Johnston County MSWLF - Area 1 Closure:
Includes construction drawings prepared by Richardson Smith Gardner & Associates and dated August, 2010.

Permit To Construct Application - Johnston County MSWLF - Phase 4A - Cell 3:
Includes technical specifications, CQA manual, and permit drawings prepared by Richardson Smith Gardner & Associates as revised through January, 2009 (Approved by NCDWM - January 16, 2009) (copy provided in **Appendix A**).

2.3 Design Modifications

Modifications to the above documents are provided in **Appendix B**. A listing of each is as follows:

Design Modifications:

1. Additional LFG Isolation Valves and Stub-Up
2. Slough Repair and Drain.

2.4 Project Participants

The following parties were involved in the construction and CQA of the Area 1 Closure:

2.4.1 Owner

Johnston County Department of Public Utilities
309 E. Market Street
P.O. Box 2263
Smithfield, NC 27577
Phone: (919) 209-8333
Fax: (919) 934-7174

Contacts: Tim Broome, P.E., Director

Johnston County Solid Waste Management Department
680 County Home Road
P.O. Box 2263
Smithfield, NC 27577
Phone: (919) 938-4750
Fax: (919) 989-7152

Contact: Rick Proctor, Solid Waste Manager

2.4.2 Engineer/CQA Engineer

Richardson Smith Gardner & Associates, Inc. (RSG)
14 N. Boylan Ave.
Raleigh, NC 27603
Phone: (919) 828-0577
Fax: (919) 828-3899

Contacts: Pieter Scheer, P.E., Project Manager
Byron Hackney, Field Technician
Randy Berarducci, Field Technician

2.4.3 CQA Testing - Soils & Geosynthetics

Geotechnics

Raleigh Office:
2200 Westinghouse Blvd., Suite 103
Raleigh, NC 27604
Phone: (919) 876-0405
Fax: (919) 876-0460

Contacts: Mike Smith, Regional Manager

Pittsburgh Office:
544 Braddock Ave.
East Pittsburgh, PA 15112
Phone: (412) 823-7600
Fax: (412) 823-8999

Contacts: J.P. Kline, P.E., Lab Director

2.4.4 Contractor

ES&J Enterprises, Inc. (ES&J)
1555 Holland Road
Autryville, NC 28318
Phone: (910) 567-6138
Fax: (910) 567-2891

Contacts: David Page, Project Manager
Clay Carter, Site Superintendent

2.4.5 Geosynthetics Installer

Hallaton, Inc.
1206 Sparks Road
Sparks, MD 21152
Phone: (410) 583-7700
Fax: (410) 583-7720

Contacts: Kennedy Garber, Project Manager

2.4.6 Contractor's Surveyor

4D Site Solutions, Inc.
3698 Johnson Mill Road
Raeford, NC 28476
Phone: (910) 904-5777
Fax: (910) 489-6779

Contacts: Jim Holland, PLS, Project Manager

3.0 SUMMARY OF CONSTRUCTION ACTIVITIES

Major elements of the project are discussed below. Photos documenting the construction can be found in **Appendix C**. Prior to ES&J beginning work, a project Pre-Construction Meeting was held on August 30, 2010.

3.1 Site Preparation

The Area 1 closure construction began in September, 2010 with surveying/staking activities and the stripping of existing vegetation and topsoil by ES&J.

3.2 Erosion and Sedimentation Control Measures

The construction of erosion and sedimentation control measures took place in conjunction with project activities. Permanent drainage features (rain gutters, down pipes, perimeter channels, etc.) were added as areas were brought to grade. Once areas reached final grade, the areas were vegetated in accordance with project requirements.

3.3 Earthwork

Once portions of the closure area were stripped of existing vegetation, additional soil was placed and tracked in as needed to repair the existing intermediate cover. As anticipated, during surface preparation activities, a few areas had to be overexcavated and backfilled due to the presence of soft areas. Additionally, excess waste was removed from some areas along the slope in order to provide even grades for the installation of the

geosynthetics. Excess waste (construction and demolition debris) was placed in the active Area 2 C&D landfill unit.

Also, just prior to the installation of the geomembrane, the surface of the intermediate cover was smooth drum rolled.

3.4 Landfill Gas (LFG) Management System

As the intermediate cover was being prepared, ES&J began construction of LFG collection trenches. After completion of the final cover, these trenches were connected with the emergency gas relief valves (3 locations). Booted penetrations were made for the relief valves, three existing LFG wells, and added valves and stub-up.

3.5 Down Pipes

Also upon preparation of the intermediate cover, ES&J installed the down pipes for removal of stormwater and flow in the drainage geocomposite (upon later connection with the rain gutters).

3.6 30 Mil LLDPE Geomembrane

Prior to the placement of geosynthetics, a geosynthetics CQA meeting was held in accordance with the requirements of the project CQA manual. A summary of this meeting can be found in **Appendix D**.

In accordance with project requirements, textured LLDPE geomembrane was placed over the Area 1 subgrade and tied into the LLDPE geomembrane (40-mil LLDPE) previously installed over the area to the east (completed during construction of Phase 4A-Cell 3). Hallaton visually accepted the subgrade surface in advance of material placement.

An as-built drawing showing the orientation of geomembrane panels as well as destructive sample and repair locations is provided in **Appendix J**.

3.7 Drainage Geocomposite/Vegetative Soil Layer

As the 30 mil LLDPE geomembrane installation began, placement of drainage geocomposite followed closely behind. Once a portion of the drainage geocomposite had been placed, placement of the vegetative soil layer was initiated by ES&J beginning on the south end of Area 1 and proceeding to the north. In order to protect the underlying geosynthetics from damage, trucks operated on at least 3 feet of cover and low ground pressure dozers were used to push out the material. Only minor wrinkling of the geomembrane was observed during placement (as is typical) and good contact between the LLDPE geomembrane and the underlying intermediate cover was apparent.

Once portions of the vegetative soil layer was in-place, ES&J constructed the rain gutters within the vegetative soil layer.

4.0 CQA PROGRAM

4.1 Scope of Services

In satisfying the requirements of the Project CQA Manual, the following activities were performed:

- Observation and documentation of construction of prepared intermediate cover, LFG management system, LLDPE geomembrane, drainage geocomposite, and vegetative soil layer.
- Field and/or laboratory testing of geosynthetics, drainage aggregate, and vegetative soil layer materials.
- Review of submittals from the Contractor for conformance with project specification and CQA requirements.
- Review/preparation of record drawings.
- Preparation of the final CQA report.

5.0 FINAL COVER SYSTEM CQA

5.1 Material Approval

RSG reviewed and approved the leachate management system product submittals provided by ES&J. The selected materials included the following:

Drainage Aggregate: - No. 57 Stone (LFG Trenches/Subsurface Drains) - No. 4 Stone (Rain Gutters)	Martin Marietta - Benson Quarry
HDPE Pipe/Fittings/Structures: - LFG Trenches - Down Pipes - Rain Gutters	ISCO Industries 6" Diam. (DR 26) 16" & 18" Diam. (DR 26) 6", 8", 10", & 12" Diam. (DR 26)
CPE Pipe/Fittings: - Below Drainage Channels	ADS N-12 8" Diam.
Emergency Gas Relief Valve:	Groth Corp. Model 1260A
Geomembrane:	See **Section 6**
Drainage Geocomposite:	See **Section 7**
Geotextiles: - Type GT-S (LFG Trenches/Toe Drains) - Type GT-T (Rain Gutters)	See **Section 8**

Copies of selected product submittals for these products can be found in **Appendix E1**.

5.2 Material Control Testing

Although smaller in gradation than the specified 1.5 to 3-inch stone, No. 4 stone has been demonstrated on similar projects to perform as intended in the construction of rain gutters. Thus, No. 4 stone was allowed for construction of the rain gutters for this project. A sample of the No. 4 stone provided from ES&J was tested for gradation (ASTM C 136). The results of this test, which met criteria for No. 4 stone, can be found in **Appendix E2**. RSG visually reviewed and approved both No. 4 stone and No. 57 stone, which was used in the LFG collection trenches and subsurface drains beneath several drainage channels.

5.3 Vegetative Soil Layer

The criteria for construction of vegetative soil layer per the project specifications included the following:

- Materials: CL, ML, SM-SC, SM, or SC (ASTM D 2487) with no deleterious material;
- Gradation: Max. = 3 inches;
- Lift Thickness: 12-inch min.;
- Density: Tracked In Only; and
- Thickness: 24 inches min.

Soil testing of representative soils used during the Area 1 project was performed during the initial stages of construction. This information, which can be found in **Appendix E3**, shows that the soil types were acceptable (mostly SC). A visual classification of soils (ASTM D 2488) was performed on an on-going basis during placement of the vegetative soil layer. Final thickness of the vegetative soil layer was verified by topographic survey (see **Appendix J**)).

5.4 Contractor CQC Testing

During construction of the down pipes and the re-installed LFG piping, ES&J performed low pressure air testing. The pressure testing was conducted in accordance with ASTM F 1417. Documentation of the successful testing, which includes six tests on the down pipes, can be found in **Appendix E4**.

6.0 30 MIL LLDPE GEOMEMBRANE CQA

6.1 Material Approval

RSG reviewed and approved the 30 mil LLDPE geomembrane product submittals provided by ES&J. The selected material was Ultraflex Textured 30 mil LLDPE geomembrane as manufactured by GSE Lining Technology, Inc. of Houston, Texas. Copies of selected product submittal information for this product can be found in **Appendix G1**.

Note that, as part of the submittal information for all geosynthetics, interface shear strength testing was performed for the geosynthetic/soil or geosynthetic/geosynthetic interfaces within the final cover system. This testing was performed on representative material samples by Precision Geosynthetics Laboratories of Anaheim, CA under contract to Hallaton. A summary of this testing performed is provided in **Appendix F**. The results for each interface were found to exceed project design requirements.

6.2 Manufacturer's Quality Control Certificates

RSG reviewed and approved GSE's quality control certificates upon delivery to the site. Copies of these certificates can be found in **Appendix G1**.

6.3 Material Control Testing

The number and results of material control tests performed on the 30 mil LLDPE geomembrane is summarized in **Table 1**. Note that the number of tests required was based on a quantity of 591,790 SF (31 rolls/2 lots) of material received. A geosynthetics inventory log for LLDPE geomembrane can be found in **Appendix G2**. This log identifies the rolls which were sampled for material control testing. The results of material control testing of LLDPE geomembrane can be found in **Appendix G3**.

6.4 Field Seam Control Tests

The results of trial welds performed by Hallaton can be found in **Appendix G4**. Information from the partial closure completed in 2009 is also included.

6.5 Field Seam Record Tests

Panel placement and seaming forms can be found in **Appendices G5 and G6**, respectively. The results of nondestructive and destructive CQC and CQA testing can be found in **Appendices G6 through G8**. A repair log documenting all repairs of defects and destructive sample locations can be found in **Appendix G9**. Record testing of LLDPE geomembrane seams is summarized in **Table 2A** (2009 Partial Closure) and **Table 2B**. Information from the partial closure completed in 2009 is also included in Appendices G5 through G9.

7.0 DRAINAGE GEOCOMPOSITE CQA

7.1 Material Approval

RSG reviewed and approved the drainage geocomposite product submittals provided by ES&J. The selected material was Fabrinet HS 275 HS/DS geocomposite as manufactured by GSE Lining Technology, Inc. of Houston, Texas. Additionally, nine rolls of TN 300-2-6, as manufactured by SKAPS Industies of Commerce, Georgia was used at the north end of the closure area due to a shortfall in material ordered from GSE.

Copies of selected product submittal information for this product can be found in **Appendix H1**.

7.2 Manufacturer's Quality Control Submittals

RSG reviewed and approved quality control certificates from both GSE and SKAPS upon delivery to the site. Copies of these certificates can be found in **Appendix H1**.

7.3 Material Control Testing

The number and results of material control tests performed on the drainage geocomposite is summarized in **Table 3**. Note that the number of tests required was based on a quantity of 600,240 SF (190 rolls/6 lots) of material received. The initial lot of drainage geocomposite from GSE (3 rolls) failed to meet the specified transmissivity value (1.0 x 10^{-3} m^3/m/sec). This material was approved for use in the LFG collection trenches beneath the geomembrane. Likewise, the SKAPS drainage geocomposite (9 rolls) also failed to meet transmissivity. This material was approved for use on the north end of the closure area where, due to flatter slopes, there is minimal concern of seepage induced instability.

A geosynthetics inventory log for the drainage geocomposite can be found in **Appendix H2**. This log identifies the rolls which were sampled for material control testing. The results of material control testing of drainage geocomposite can be found in **Appendix H3**.

8.0 GEOTEXTILE CQA

8.1 Material Approval

RSG reviewed and approved the geotextile product submittals provided by ES&J. The selected materials were TerraTex N06 (Type GT-S geotextile) and TerraTex N04.5 (Type GT-T geotextile) as manufactured by Hanes Geo Components. Copies of selected product submittal information for this product can be found in **Appendix I1**.

8.2 Manufacturer's Quality Control Submittals

RSG reviewed and approved quality control certificates from Hanes Geo Components upon delivery to the site. Copies of these certificates can be found in **Appendix I1**.

8.3 Material Control Testing

The number and results of material control tests performed on the drainage geotextiles is summarized in **Table 4**. Note that the number of tests required was based on quantities of 90,000 SF (20 rolls/1 lot) of Type GT-S geotextile and 18,000 SF (4 rolls/1 lot) of Type GT-T geotextile material received. A geosynthetics inventory log for the geotextiles can be found in **Appendix I2**. This log identifies the rolls which were

sampled for material control testing. The results of material control testing of geotextiles can be found in **Appendix I3**.

9.0 RECORD DRAWINGS

The following record (as-built) drawings depicting the construction of the Area 1 closure can be found in **Appendix J**:

- 2009 As-Built LLDPE Geomembrane Panel Layout with Destructive Test and Repair Locations (prepared by Hallaton);
- 2010 As-Built LLDPE Geomembrane Panel Layout with Destructive Test and Repair LoAs-Built HDPE Pipe; and
- As-Built Subgrade and Top of Vegetative Soil Layer (prepared by 4D Site Solutions).

10.0 PROJECT CERTIFICATION

Based on the observations and results of the CQA program documented herein, it is our professional opinion that the closure of Area 1 of the Johnston County C&D Landfill was completed in accordance with the following:

i. The Project CQA Manual;
ii. The conditions of the Permit to Construct/Permit to Operate;
iii. The requirements of 15A NCAC 13B.0541; and
iv. Acceptable engineering practices.

RICHARDSON SMITH GARDNER & ASSOCIATES, INC.

Pieter K. Scheer, P.E.
Project Manager

TABLE 1
SUMMARY OF MATERIAL CONTROL TESTS
LLDPE GEOMEMBRANE

	Property									
	Thickness	Density	Carbon Black Content	Carbon Black Dispersion[1]	Tensile Properties				Tear Resistance	
					Tensile Strength at Break		Elongation at Break			
					MD	CD	MD	CD	MD	CD
Units	mils	g/cm^3	%	Category	lb/inch		%		lbs	
Test Method	ASTM D 5994	ASTM D 1505	ASTM D 1603	ASTM D 5596	ASTM D 6693 (Type IV)				ASTM D 1004	
Required Test Frequency	100,000 ft^2 or 1 per Lot	100,000 ft^2 or 1 per Lot	100,000 ft^2 or 1 per Lot	100,000 ft^2 or 1 per Lot	100,000 ft^2 or 1 per Lot				100,000 ft^2 or 1 per Lot	
No. of Tests Required	6	6	6	6	6		6		6	
No. of Tests Performed	7	7	7	7	7		7		7	
Specified Value	30 (See Note 3)	$\leq$ 0.939	2.0 - 3.0	1, 2, or 3	$\geq$ 45		$\geq$ 250		$\geq$ 16	
Sample I.D.	Results									
105154397	31	0.931	2.5	Pass	117	89	604	497	25	25
105154406	31	0.931	2.5	Pass	133	111	648	579	26	25
105154411	30	0.931	2.4	Pass	115	96	583	537	25	24
105154416	32	0.930	2.3	Pass	130	115	599	557	27	27
105154423	30	0.930	2.1	Pass	126	99	616	534	25	23
105154428	30	0.930	2.2	Pass	125	99	640	548	23	24
105154433	28	0.930	2.2	Pass	117	99	593	529	25	24
Minimum Value	28	0.930	2.1	Pass	115	89	583	497	23	23
Maximum Value	32	0.931	2.5	Pass	133	115	648	579	27	27
Average Value	30	0.931	2.3	Pass	123	101	612	540	25	24

Quantity of LLDPE Geomembrane Received: 591,790 ft^2

2 Lots

Notes:

1. Carbon black dispersion for 10 different views: Min. 9 of 10 in Categories 1 or 2; All 10 in Categories 1, 2, or 3.
2. MD = Machine Direction; CD = Cross Machine Direction
3. Thickness value is a nominal value. Minimum average can be -5% (28 mils).

TABLE 2A
SUMMARY OF MATERIAL RECORD TESTS
LLDPE GEOMEMBRANE SEAMS

	Property					
	Peel Strength[1]				Shear Strength[1]	
	Peak Load Outside Track (Weld "A")	Locus of Break & Incursion	Peak Load Inside Track (Weld "B")	Locus of Break & Incursion	Peak Load	Locus of Break & Incursion
Units	lbs/inch	-----	lbs/inch	-----	lbs/inch	-----
Test Method	ASTM D 6392					
CQC Field Destructive Seam Testing						
Required Test Frequency	500 LF					
No. of Tests Required	8					
No. of Tests Performed	9					
Specified Value	≥ 38 (Hot Wedge) ≥ 34 (Ex. Fillet)	(See Note 2)	≥ 38 (Hot Wedge) ≥ 34 (Ex. Fillet)	(See Note 2)	≥ 45	(See Note 2)
	Results - See Appendix G					
CQA Laboratory Destructive Seam Testing						
Required Test Frequency	1 per day of Production Seaming					
No. of Tests Required	4					
No. of Tests Performed	9					
Specified Value (See Note 2)	≥ 38 (Hot Wedge) ≥ 34 (Ex. Fillet)	(See Note 2)	≥ 38 (Hot Wedge) ≥ 34 (Ex. Fillet)	(See Note 2)	≥ 45	(See Note 2)
Sample I.D.	**Results**					
DS-1	69	Pass	68	Pass	72	Pass
DS-2	68	Pass	68	Pass	75	Pass
DS-3	70	Pass	70	Pass	81	Pass
DS-4	72	Pass	74	Pass	81	Pass
DS-5	71	Pass	71	Pass	81	Pass
DS-6	71	Pass	70	Pass	82	Pass
DS-7	71	Pass	72	Pass	82	Pass
DS-8	70	Pass	70	Pass	79	Pass
DS-9	68	Pass	66	Pass	74	Pass
Minimum Value	68	Pass	66	Pass	72	Pass
Maximum Value	72	Pass	74	Pass	82	Pass
Average Value	70	Pass	70	Pass	79	Pass

Quantity of Geomembrane Seams: 3,820 LF (+/-)

Number of Production Seaming Days: 4 Days

Notes:

1. Values listed for shear and peel strengths are for 4 out of 5 test specimens; the 5th specimen can be as low as 80% of the specified values.
2. Regarding the locus-of-break patterns of the different seaming methods in shear and peel, refer to the project specifictions.

TABLE 2B
SUMMARY OF MATERIAL RECORD TESTS
LLDPE GEOMEMBRANE SEAMS

	Property					
	Peel Strength[1]				Shear Strength[1]	
	Peak Load Outside Track (Weld "A")	Locus of Break & Incursion	Peak Load Inside Track (Weld "B")	Locus of Break & Incursion	Peak Load	Locus of Break & Incursion
Units	lbs/inch	-----	lbs/inch	-----	lbs/inch	-----
Test Method	ASTM D 6392					
CQC Field Destructive Seam Testing						
Required Test Frequency	500 LF					
No. of Tests Required	51					
No. of Tests Performed	54					
Specified Value	≥ 38 (Hot Wedge) ≥ 34 (Ex. Fillet)	(See Note 2)	≥ 38 (Hot Wedge) ≥ 34 (Ex. Fillet)	(See Note 2)	≥ 45	(See Note 2)
	Results - See Appendix G					
CQA Laboratory Destructive Seam Testing						
Required Test Frequency	1 per day of Production Seaming					
No. of Tests Required	8					
No. of Tests Performed	54					
Specified Value (See Note 2)	≥ 38 (Hot Wedge) ≥ 34 (Ex. Fillet)	(See Note 2)	≥ 38 (Hot Wedge) ≥ 34 (Ex. Fillet)	(See Note 2)	≥ 45	(See Note 2)
Sample I.D.	**Results**					
DS-1	51	Pass	54	Pass	58	Pass
DS-2	54	Pass	52	Pass	60	Pass
DS-3	53	Pass	55	Pass	61	Pass
DS-4	52	Pass	56	Pass	61	Pass
DS-5	54	Pass	56	Pass	61	Pass
DS-6	58	Pass	58	Pass	68	Pass
DS-7	57	Pass	57	Pass	62	Pass
DS-8	57	Pass	59	Pass	67	Pass
DS-9	53	Pass	59	Pass	63	Pass
DS-10	52	Pass	53	Pass	57	Pass
DS-11	56	Pass	57	Pass	64	Pass
DS-12	57	Pass	56	Pass	60	Pass
DS-13	56	Pass	58	Pass	67	Pass
DS-14	55	Pass	58	Pass	62	Pass
DS-15	55	Pass	61	Pass	64	Pass
DS-16	50	Pass	57	Pass	64	Pass
DS-17	59	Pass	60	Pass	62	Pass
DS-18	61	Pass	59	Pass	65	Pass
DS-19	55	Pass	58	Pass	64	Pass
DS-20	62	Pass	58	Pass	61	Pass

TABLE 2B
SUMMARY OF MATERIAL RECORD TESTS
LLDPE GEOMEMBRANE SEAMS

CQA Laboratory Destructive Seam Testing (Continued)						
Specified Value (See Note 2)	≥ 38 (Hot Wedge) ≥ 34 (Ex. Fillet)	(See Note 2)	≥ 38 (Hot Wedge) ≥ 34 (Ex. Fillet)	(See Note 2)	≥ 45	(See Note 2)
Sample I.D.	**Results**					
DS-21	56	Pass	56	Pass	62	Pass
DS-22	54	Pass	54	Pass	54	Pass
DS-23	54	Pass	55	Pass	54	Pass
DS-24	55	Pass	54	Pass	57	Pass
DS-25	53	Pass	53	Pass	55	Pass
DS-26	54	Pass	54	Pass	55	Pass
DS-27	53	Pass	53	N/A	55	Pass
DS-28	53	Pass	55	Pass	56	Pass
DS-29	53	Pass	54	Pass	54	Pass
DS-30	52	Pass	54	Pass	53	Pass
DS-31	53	Pass	54	N/A	55	Pass
DS-32	54	Pass	54	Pass	56	Pass
DS-33	55	Pass	54	Pass	55	Pass
DS-34	53	Pass	55	Pass	56	Pass
DS-35	53	Pass	52	Pass	55	Pass
DS-36	58	Pass	59	Pass	57	Pass
DS-37	54	Pass	57	Pass	60	Pass
DS-38	51	Pass	53	Pass	62	Pass
DS-39	56	Pass	58	Pass	60	Pass
DS-40	57	Pass	58	Pass	61	Pass
DS-41	56	Pass	57	Pass	61	Pass
DS-42	55	Pass	60	Pass	63	Pass
DS-43	54	Pass	54	Pass	56	Pass
DS-44	56	Pass	53	Pass	55	Pass
DS-45	55	Pass	55	Pass	54	Pass
DS-46	54	Pass	54	Pass	55	Pass
DS-47	55	Pass	53	Pass	56	Pass
DS-48	51	Pass	51	Pass	54	Pass
DS-49	53	Pass	53	Pass	56	Pass
DS-50	50	Pass	52	Pass	54	Pass
DS-51	54	Pass	53	Pass	55	Pass
DS-52	55	Pass	56	Pass	55	Pass
DS-53	53	Pass	54	Pass	54	Pass
DS-54	61	Pass	56	Pass	63	Pass
Minimum Value	50	Pass	51	Pass	53	Pass
Maximum Value	62	Pass	61	Pass	68	Pass
Average Value	55	Pass	55	Pass	59	Pass

Quantity of Geomembrane Seams: 25,498 LF (+/-)

Number of Production Seaming Days: 8 Days

Notes:

1. Values listed for shear and peel strengths are for 4 out of 5 test specimens; the 5th specimen can be as low as 80% of the specified values.
2. Regarding the locus-of-break patterns of the different seaming methods in shear and peel, refer to the project specifictions.

TABLE 3
SUMMARY OF MATERIAL CONTROL TESTS
DRAINAGE GEOCOMPOSITE

	Property				
	Geonet Thickness	Geonet Density	Ply Adhesion		Transmissivity
			Side A	Side B	
			MD[1]	MD	
Units	inches	g/cm^3	lbs		$m^3/m/sec$
Test Method	ASTM D 5199	ASTM D 1505	ASTM D 413 or GRI GC7		ASTM D 4716
Required Test Frequency	100,000 ft^2 or 1 per Lot	100,000 ft^2 or 1 per Lot	100,000 ft^2 or 1 per Lot		1 per Lot
No. of Tests Required	7	7	7		6
No. of Tests Performed	11	11	11		7
Specified Value	$\geq$ 0.25	$\geq$ 0.94	$\geq$ 2.0 (Typ.)/ $\geq$ 1.0 (Min. Avg.)		$\geq 1.0 \times 10^{-3}$
Sample I.D.	**Results**				
GSE 131312213	0.28	0.96	2.2	4.1	7.7E-04
					(See Note 2)
GSE 131313575	0.28	0.96	2.8	3.0	1.4E-03
GSE 131331843	0.28	0.96	1.7	1.0	1.5E-03
GSE 131338071	0.28	0.96	4.0	3.7	1.8E-03
GSE 131338102	0.28	0.96	1.4	2.1	
GSE 131338137	0.28	0.96	4.3	4.4	
GSE 131338191	0.28	0.96	1.7	2.1	2.0E-03
GSE 131350882	0.28	0.96	2.3	2.3	2.1E-03
GSE 131350911	0.28	0.96	1.8	1.3	
GSE 131350941	0.28	0.96	2.5	1.5	
SKAPS 404610009	0.29	0.95	6.3	8.7	7.5E-04
					(See Note 3)
Minimum Value	0.28	0.95	1.4	1.0	7.5E-04
Maximum Value	0.29	0.96	6.3	8.7	2.1E-03
Average Value	0.28	0.96	2.8	3.1	1.5E-03
Quantity of Drainage Geocomposite Received:				600,240 ft^2	
				6 Lots	

Notes:
1. MD = Machine Direction
2. This material was approved for use in construction of the LFG collection trenches.
3. This material was approved for use on the north slope of the closure area where the slopes are flatter.

TABLE 4
SUMMARY OF MATERIAL CONTROL TESTS
GEOTEXTILES

	Property							
	Tensile Properties				Puncture Resistance	Trapezoidal Tear Strength		Apparent Opening Size (AOS)
	Grab Strength		Grab Elongation					
	MD[1]	CD[1]	MD	CD		MD	CD	
Units	lbs		%		lbs	lbs		U.S. Sieve
Test Method	ASTM D 4632		ASTM D 4632		ASTM D 4833	ASTM D 4533		ASTM D 4751
Required Test Frequency	100,000 ft^2 or 1 per Lot		100,000 ft^2 or 1 per Lot		100,000 ft^2 or 1 per Lot	100,000 ft^2 or 1 per Lot		100,000 ft^2 or 1 per Lot[2]
Type GT-T Geotextile								
No. of Tests Required	1		1		1	1		1
No. of Tests Performed	1		1		1	1		1
Specified Value	≥ 115		≥ 50		≥ 40	≥ 40		≥ 70
Sample I.D.	**Results**							
010294578	117	124	86	95	66	61	67	80
Minimum Value	117	124	86	95	66	61	67	80
Maximum Value	117	124	86	95	66	61	67	80
Average Value	117	124	86	95	66	61	67	80
Quantity of Type GT-T Geotextile Received: 18,000 SF 1 Lots								
Type GT-S Geotextile								
No. of Tests Required	1		1		1	1		1
No. of Tests Performed	2		2		2	2		2
Specified Value	≥ 160		≥ 50		≥ 55	≥ 55		≥ 70
Sample I.D.	**Results**							
31009323459	195	216	92	116	96	100	129	100
31009323528	215	228	92	115	105	103	116	100
Minimum Value	195	216	92	115	105	103	116	100
Maximum Value	215	228	92	116	105	103	116	100
Average Value	205	222	92	115	105	103	116	100
Quantity of Type GT-S Geotextile Received: 90,000 SF 1 Lots								

Notes:

1. MD = Machine Direction; CD = Cross Machine Direction

Appendix A

Reference Documents (Permit)

1. **Solid Waste - Permit to Construct (53-03)**

North Carolina Department of Environment and Natural Resources
Dexter R. Matthews, Director | **Division of Waste Management** | Beverly Eaves Perdue, Governor
Dee Freeman, Secretary

STATE OF NORTH CAROLINA
DEPARTMENT OF ENVIRONMENT AND NATURAL RESOURCES
DIVISION OF WASTE MANAGEMENT
SOLID WASTE SECTION

MUNICIPAL SOLID WASTE AND C&D LANDFILL
Permit No. 51-03

JOHNSTON COUNTY
is hereby issued a

PERMIT TO CONSTRUCT

JOHNSTON COUNTY MSW AND C&D LANDFILL
MUNICIPAL SOLID WASTE PHASE 4A, Cell 3

Located at 680 County Home Road, west of Smithfield, in Johnston County, North Carolina in accordance with Article 9, Chapter 130A, of the General Statutes of North Carolina and all rules promulgated thereunder and subject to the conditions set forth in this permit. The legal description of the site is identified on the deeds recorded for this property listed in Attachment No. 1 of this permit.

Edward F. Mussler, III, P.E.,
Permitting Branch Supervisor
Solid Waste Section

1646 Mail Service Center, Raleigh, North Carolina 27699-1646
Phone 919-508-8400 \ FAX 919-733-4810 \ Internet: www.wastenotnc.org/swhome
An Equal Opportunity / Affirmative Action Employer – Printed on Dual Purpose Paper

One NorthCarolina Naturally

ATTACHMENT 1

PART I: PERMITTING HISTORY

1. In 1973, landfill operations began in Phase 1 on this property. Phases 2, 3, and 4 began operating in 1974, 1979, and 1984, respectively. In 1984, landfill permit number 51-01 was issued for the facility. Phases 1 through 4 were not constructed with a liner below the waste. Acreage and volume information on the unlined Phases of the landfill are following:

Unlined Landfill Unit	Area (acres)	Gross Capacity (cubic yards)
Phases 1 and 2	22.1	732,363
Phase 3	25.4	1,174,139
Phase 4	37.3	1,631,731
Total Unlined	84.8	3,538,233

2. In 1997, landfill operations began in Phase 5, which was constructed with a Subtitle D liner. Phase 5 was issued permit number 51-02.
3. In 1998, a separate C&D (construction and demolition debris) landfill cell began operating on top of closed MSW Phase 4. This area was called C&D Phase 4A at that time, but was later named C&D Area 1.
4. In 2002, permit number 51-03 was issued. This permit approved operation of MSW Phase 4A (Cell 1), which is a lined landfill cell between closed MSW Phases 3 and 4. Phase 4A also piggybacks the side slopes over closed Phases 3 and 4. This permit issuance incorporated previous permits 51-01 and 51-02 into one permit, now called permit number 51-03.
5. In 2005, landfill operations began in MSW Phase 4A, Cell 2. A vertical expansion was approved for C&D disposal in C&D Area 1 on top of closed Phase 4.
6. In 2007, C&D Area 2 was approved and began operating. Part of this area (Cell 1) is adjacent and east of closed MSW Phase 3, and part of Area 2 (Cell 2) piggybacks the side slope of closed Phase 3. C&D Area 2 is designed with a geomembrane liner and leachate collection system.

Issuance	**Date**
Permit No. 51-01	Original Issue
Permit No. 51-01 PTO Phase 4	March 13, 1984
Permit No. 51-01 PTO vertical expansion	October 25, 1990
Permit No. 51-01 PTO vertical expansion	July 30, 1991
Permit No. 51-01 PTO C&D Phase 4A (C&D Area 1)	December 22, 1998
Permit No. 51-01 PTO C&D Phase 4A (C&D Area 1)	January 22, 2002
Permit No. 51-02 PTC Phase 5	December 22, 1995

Permit No. 51-02 PTO Phase 5	August 6, 1997
Permit No. 51-02 PTO Phase 5 leachate recirculation	March 27, 2001
Permit No. 51-03 PTC MSW Phase 4A Cells 1 and 2 and C&D Phase 4A (C&D Area 1)	April 3, 2002
Permit No. 51-03 PTO	April 3, 2002
Permit No. 51-03 PTO MSW Phase 4A Cell 1 and C&D Phase 4A (C&D Area 1)	December 20, 2002
Permit No. 51-03 PTO MSW Phase 4A Cell 2 and C&D Area 1	August 1, 2005
Permit No. 51-03 PTC C&D Area 2, Cell 1	August 31, 2006
Permit No. 51-03 PTO C&D Area 2, Cell 1	August 24, 2007
Permit No. 51-03 PTC MSW Phase 4A, Cell 3	January 16, 2009

PART II: LIST OF DOCUMENTS FOR THE APPROVED PLAN

1. *Johnston County Subtitle D Landfill Phase 5, Permit 51-02, Construction Quality Assurance and As-Built Certification for Permit-to-Operate.* Prepared by: McKim & Creed Engineers, P.A., Cary, North Carolina. March 1997. 3 Volumes.

2. *Johnston County Subtitle D Landfill CQA, As-Built, and Revised Engineering Plan.* Prepared by: McKim & Creed Engineers, P.A., Cary, North Carolina. March 1997. 14 Sheets.

3. *Johnston County Landfill, Phase 5, Permit 51-02, Johnston County, North Carolina, Survey and As-Built Plans.* Prepared by: F. Donald Lawrence, Monroe, North Carolina. Provided by: Ground Improvement Techniques, Inc., Contractor. Submitted by: McKim & Creed, March 1997. 7 Sheets.

4. Letter Grimes to Fry. Requesting approval of Alternative Daily Cover, Tarpomatic. Includes brochure. July 27, 1998.

5. *Johnston County C&D Landfill Vertical Expansion.* Prepared for: Johnston County Department of Public Utilities. Prepared by: G.N. Richardson & Associates, Inc., Raleigh, North Carolina. December 1998.

6. Cap Closure Certification Letter for the Johnston County Landfill dated 21 December 1998 by G.N. Richardson & Associates and received 22 December 1998 and incorporated into the approved application.

7. *Permit to Construct Application. Johnston County MSW Landfill-Phase 4A. Johnston County, North Carolina.* Prepared by: G.N. Richardson & Associates, Inc., Raleigh, North Carolina. April 2000. Revised December 2001. Volume 1 of 2, Design Engineering. Volume 2 of 2, Design Hydrogeologic Report, revised January 2002.

8. *Johnston County MSW Landfill-Phase 4A. Permit Drawings*. Prepared by: G.N. Richardson & Associates, Inc., Raleigh, North Carolina. April 2000. Revised December 2001. 38 Sheets.

9. *Leachate Recirculation Plan, Johnston County MSW Landfill, Phase 5, Johnston County, North Carolina.* Prepared by: G.N. Richardson & Associates, Raleigh, North Carolina. May 2000. Amended through February 2001.

10. *Permit Modification Application. Johnston County C&D Landfill Vertical Expansion. Johnston County, North Carolina*. Prepared By: G.N. Richardson & Associates, Inc., Raleigh, North Carolina. January 2002. (Modification, Area 4A, Permit No. 51-01)

11. Division of Water Quality Permit No. WQ0019631, Johnston County, Conjunctive Use at Johnston County Landfill, Reclaimed Water Utilization System. March 27, 2002. Modified June 13, 2003, December 20, 2004, May 5, 2006, and November 16, 2006.

12. *Construction Quality Assurance Report, Johnston County MSW Landfill, Phase 4A, Cell 1, Johnston County, North Carolina.* Prepared by: G.N. Richardson & Associates, Raleigh, North Carolina. December 2002. 2 Volumes.

13. *Permit Modification Application. Johnston County C&D Landfill Vertical Expansion. Johnston County, North Carolina*. Prepared By: G.N. Richardson & Associates, Inc., Raleigh, North Carolina. December 2003, Revised August 2005.

14. *Construction Quality Assurance Report, Johnston County MSW Landfill, Phase 4A, Cell 2, Johnston County, North Carolina.* Prepared by: G.N. Richardson & Associates, Raleigh, North Carolina. July 2005.

15. *Permit to Construct Application. Johnston County C&D Landfill, Area 2, Johnston County, North Carolina*. Prepared by: G.N. Richardson & Associates, Inc., Raleigh, North Carolina. October 2005. Revised May 2006.

16. *Johnston County C&D Landfill, Area 2, Permit Drawings*. Prepared by: G.N. Richardson & Associates, Inc., Raleigh, North Carolina. October 2005. Revised March 2006. 25 Sheets.

17. *Construction Quality Assurance Report, Johnston County C&D Landfill, Area 2, Cell 1, Johnston County, North Carolina*. Prepared By: Richardson Smith Gardner & Associates, Raleigh, North Carolina. June 2007.

18. *Johnston County Landfill Equalization Facility Drawings*. Prepared for: Johnston County. Prepared by: Dewberry & Davis, Inc., Raleigh, North Carolina. October 2007.

19. Letter from Pieter Scheer, Richardson, Smith, Gardner & Associates, to Donna Wilson, NC DENR., November 6, 2007. Revised Permit Modification Request, Modification of Existing Leachate Storage Pond for use as Equalization Basin.

20. *Permit Amendment Application, Johnston County MSW Landfill, Phase 4A, Cell 3.* Prepared By: Richardson Smith Gardner & Associates, Raleigh, North Carolina. June 2007, amended January 2009. DIN 6618.

PART III: PROPERTIES APPROVED FOR THE SOLID WASTE FACILITY

Johnston County, N.C. Register of Deeds					
Book	Page	Grantee	Grantor	Parcel No.	Acres
763	525	Johnston County	Gladys D. Lassiter	15I08028	86.6
1228	652	Johnston County	Jo Ann Johnson Lane and Ralph Lane	15I08028	248.75
1215	747	Johnston County	Hazel B. Johnson and Edwin H Johnson	15I09002C	63
E-3	1	Johnston County		15I08032B	13.01
		Johnston County		15I08032C	8.23
		Johnston County		15I08028C	88.05
Plat 59	437	Johnston County			500.12
					Total Site Acreage: 500.12 acres

PART IV: GENERAL PERMIT CONDITIONS

1. This permit is issued by the North Carolina Department of Environment and Natural Resources, Division of Waste Management, Solid Waste Section (Section). In accordance with North Carolina Solid Waste Management Rule 15A NCAC 13B .0201(d), a solid waste management facility permit shall have two parts: a Permit to Construct and a Permit to Operate. The permit to construct shall expire on January 16, 2014. The permit to construct must be implemented in accordance with Attachment 2 of this permit. The permit to operate shall expire August 24, 2012.

2. The persons to whom this permit is issued (permittee) are the owners and operators of the solid waste management facility.

3. [Intentionally Blank]

4. When this property is sold, leased, conveyed, or transferred in any manner, the deed or other instrument of transfer must contain in the description section in no smaller type than that used in the body of the deed or instrument, a statement that the property has been used as a Municipal Solid Waste Landfill (MSWLF) and a reference by book and page to the recordation of the permit.

5. By beginning construction or receiving waste at this facility the permittee shall be considered to have accepted the terms and conditions of this permit.

6. Construction and operation of this solid waste management facility shall be in accordance with the Solid Waste Management Rules, 15A NCAC 13B; Article 9 of the Chapter 130A of the North Carolina General Statutes (NCGS 130A-290, et seq.); the conditions contained in this permit; and the approved plan. If the approved plan and the rules conflict, the Solid Waste Management Rules shall take precedence unless specifically addressed by permit condition.

7. The permit is issued based on the documents submitted in support of the application for permitting the facility identified in Attachment 1, Part II "List of Documents for Approved Plan," which constitutes the approved plan for the facility. Where discrepancies exist, the most recent submittals and the Conditions of Permit shall govern.

8. The permit may be transferred only with the approval of the Section through the issuance of a new or substantially amended permit in accordance with applicable statutes and rules. In accordance with NCGS 130A-295.2(g), the permittee must notify the Section thirty (30) days prior to any significant change in the identity or business structure of either the owner or the operator, including but not limited to a proposed transfer of ownership of the facility or a change in the parent company of the owner or operator of the facility.

9. The permittee is responsible for obtaining all permits and approvals necessary for the development of this project including approval from appropriate agencies for a General or Individual NPDES Stormwater Discharge Permit. Issuance of this permit does not remove the permittee's responsibilities for compliance with any other local, state or federal rule, regulation or statute.

- End of Section -

ATTACHMENT 2

CONDITIONS OF PERMIT TO CONSTRUCT

PART I: FACILITY SPECIFIC CONDITIONS

1. Pursuant to the NC Solid Waste Management Rules (Rule) 15A NCAC 13B .0201(c) and (d)(1), this permit approves construction of Cell 3 of MSW Phase 4A. The initial, substantial, construction authorized by this Permit to Construct must commence within 18 months from the issuance date of this permit. If substantial construction does not begin within 18 months from the issuance date of this permit, then the permittee must obtain a permit modification from the Section prior to construction, comply with the conditions of the approval and submit a Municipal Solid Waste landfill permit modification fee. Substantial construction includes, but is not limited to, issuance of construction contracts, mobilization of equipment on site, and construction activities including installation of sedimentation and erosion control structures.

2. Construction of all solid waste management units within this facility must be in accordance with the pertinent approved plans and only for those phases of development approved for construction as described in Attachment I, Part II List of Documents for Approved Plan.

3. The permittee must conduct a preconstruction meeting at the facility prior to initiating construction of any unit/cell and must notify the Section at least 10 days prior to the meeting.

4. Modifications or revisions of the approved documents or changes during construction of any landfill unit/cell require approval by the Section, and may constitute a permit modification and be subject to a permitting fee.

Geologic, Ground Water and Monitoring Requirements

5. Prior to issuing the Permit to Operate, the ground water monitoring wells and surface water sampling locations must be sampled for the Appendix I constituent list.

6. Prior to construction of the phase or cell(s) within the phase, all piezometers, borings, and groundwater monitoring wells within the footprint must be properly abandoned in accordance with 15A NCAC 2C .0113 (b)(1), entitled "Abandonment of Wells."

7. In areas where soil is to be undercut, abandoned piezometers, monitoring wells and borings must not be grouted to pregrade land surface, but to the proposed base grade surface to prevent having to cut excess grout and possibly damage the wells.

8. A Licensed Geologist must report any pertinent geological feature(s) exposed during phase or cell excavation. Prior to placing any landfill liner, the geologist must submit to the Section hydrogeologist a written report that includes an accurate description of the exposed geological feature(s) and effect of the geological feature(s) on the design, construction, and operation of the cell, phase, or unit.

9. A Licensed Geologist must supervise installation of groundwater monitoring wells.

10. Any modification to the approved water quality monitoring, sampling, and analysis plan must be submitted to the Section Hydrogeologist for review.

11. Within 30 days of completed construction of each new groundwater monitoring well, a well construction record (GW-1 form), typical well schematic, boring log, field log and notes, and description of well development activities must be submitted to the Section.

12. The permittee must provide a plan sheet-sized, scaled topographical map, showing the location and identification of new, existing, and abandoned wells and piezometers after installation of groundwater monitoring wells.

13. Well abandonment records (GW-30 form) for each decommissioned piezometer, boring, and groundwater monitoring well must be certified by a Licensed Geologist and submitted to the Section in accordance with 15A NCAC 2C .0114 (b).

Erosion and Sedimentation Control Requirements

14. All required sedimentation and erosion control measures must be installed and operable to mitigate excessive on-site erosion and to prevent silt from leaving the area of the landfill unit during the service life of the facility.

15. All earth disturbing activities must be conducted in accordance with the Sedimentation Pollution Control Act of 1973 (15 NCAC 4) and consistent with any other local, state or federal requirements.

16. Facility construction, operations or practices must not cause or result in a discharge of pollution, dredged material, and/or fill material into waters of the state in violation of the requirements under Sections 402 and 404 of the Clean Water Act, as amended.

17. Modifications to the approved sedimentation and erosion control activities require approval by the North Carolina Land Quality Section. The Section must be notified of any sedimentation and erosion control plan modifications.

PART II: MUNICIPAL SOLID WASTE LANDFILL SPECIFIC CONDITIONS

18. This permit authorizes the construction of MSW Cell 3 of Phase 4A consisting of 7.4 acres and 2,167,047 cubic yards of gross capacity in accordance with the approved plan referenced in Attachment 1, Part II, of this permit. Gross capacity is the measured volume between the bottom of waste and the top of final cover.

19. Areas identified as future cells (Cells 6 through 10) are deemed suitable for preparation of a permit application in accordance with Solid Waste Rule 15A NCAC 13B .1618(a)(1). The permittee must submit an application for a Permit to Construct in compliance with applicable rules and statutes before commencement of construction in those future areas.

20. This permit approves the Facility Plan that defines the comprehensive development of the facility including the total municipal solid waste (MSW) landfill capacity, the MSW waste stream, all onsite solid waste management facilities and related infrastructure in accordance with 15 A NCAC 13 B .1619. The landfill approved for development is summarized below:

Landfill Unit	Acres	Gross Capacity (cubic yards)	Life Expectancy (years)
Phase 5	19.2	1,087,199	Inactive
Phase 4A, Cells 1 & 2	22.0	1,111,382	At capacity
Phase 4A, Cell 3, fill sequence 1	7.4	1,420,566	3.1 – 5.9
Phase 4A, Cell 3, fill sequence 2	0	746,481	1.3 – 2.6
Phase 6	21.1	1,402,016	2.3 – 4.3
Phase 7	19.8	1,758,991	2.8 – 4.8
Phase 8	25.2	1,844,867	2.8 – 4.4
Phase 9	22.5	6,684,914	11.2 – 15.7
Phase 10	17.5	3,075,968	4.6 – 5.7
Total (Lined)	154.7	19,132,384	23.7 – 34.9

Life expectancies calculated December 2008

21. The last approved and advertised Facility Plan identified the total gross capacity of the landfill as 19,900,000 cubic yards, which was combined MSW volume (MSW Phases 4A

and Phases 5 – 10) of 18,367,420 cubic yards and C&D volume of 1,487,003 cubic yards. The current approved Facility Plan has been modified to increase the total gross landfill capacity to 20,620,189 cubic yards, which is combined MSW capacity of 19,132,384 cubic yards and C&D volume of 1,487,805 cubic yards. This increase is a 3.6% increase of the total gross capacity of the landfill. If a 10% or more increase in total gross landfill capacity is proposed in the future, which would be 21,890,000 cubic yards or more for the combined MSW Phases 4A and 5 – 10 capacity and C&D area capacity, public notice and local government approval will be required.

22. The following conditions must be met prior to operation of the Cell 3, Phase 4A area:

a. The Permittee must obtain a Permit to Operate the Cell 3, Phase 4A area from the Section in accordance with 15A NCAC 13B .0201(d).
b. Construction Quality Assurance (CQA) documentation as well as a certification by the project engineer that the landfill was built in accordance with approved plans and the conditions of the permit must be submitted to the Section for review and approval.
c. The permittee must contact the appropriate regional environmental specialist and permitting engineer to determine whether the Section chooses to hold a pre-operative meeting with key landfill personnel and representatives of the Section.
d. The edge of the waste footprint must be identified with a permanent physical marker.

PART III: CONSTRUCTION AND DEMOLITION DEBRIS UNIT SPECIFIC CONDITIONS

23. The following table lists the dimensions and details for the C&D landfill units, both existing and planned, as described in Attachment 1, Part II, Document 20, Table 2.2B. C&D Unit Area 2, Cell 2 has not been approved for operation.

C&D Units	Acres	Gross Capacity (cubic yards)	Approximate Service Years[1]
Area 1	16.2	614,472	Inactive
Area 2, Cell 1	11.9	410,675	4.3 – 5.1
Area 2, Cell 2	3.9	462,658	4.9 – 5.7
Total	32.0	1,487,805	9.2 – 10.8

[1]Life expectancy as calculated 6/6/08.

Appendix B

Design Modifications

1. **Additional LFG Isolation Valves and Stub-Up**
2. **Slough Repair and Drain**

RICHARDSON SMITH GARDNER & ASSOCIATES
ENGINEERING & GEOLOGICAL SERVICES
114 N BOLYAN AVENUE
RALEIGH, NORTH CAROLINA 27603

Design Modification No. 1

Project:	Johnston County C&D Landfill Area 1 Closure Smithfield, NC
Owner:	Johnston County Dept. of Public Utilities 309 E. Market Street Smithfield, NC 27577
Contractor:	ES&J Enterprises, Inc. ATTN: David Page 1555 Holland Road Autryville, NC 28318

Regulatory Review Required (Y/N): N*
*If Yes, see below.

Reference(s):
Area 1 Closure Construction Drawings - Drawing S2

Description of Modification(s):
Addition of 3 butterfly (isolation) valves (with monitoring ports) and one stub up for future connection to active landfill gas (LFG) collection and control system.

Reason for Modification(s):
This change was requested by the site's LFG Developer (Blue Source) and their engineer, SCS Engineers.

Attachments:
SCS figure showing location of valves and stub-up; RSG figure showing details.

Comments:

Regulatory Agency:
ATTN:

By:	**Pieter K. Scheer, P.E.**
Title:	**Project Manager**
Date:	**September 30, 2010**

Distribution:

	Owner	X	Contractor	X	Field	X	File	X	Regulatory Agency (With CQA Report)

M:\CADD PROJECT DRA\ 2210301.00-Johnston County\JCL-Existing Conditions v0.2.dwg, 8/4/2010 3:45:22 PM, Adobe PDF

M:\CADD PROJECT DRAWINGS\02210301.00-Johnston County\JCL-Existing Conditions v0.2.dwg Aug 04, 2010 - 3:45pm Layout Name: 100 SCALE By: jmorgan

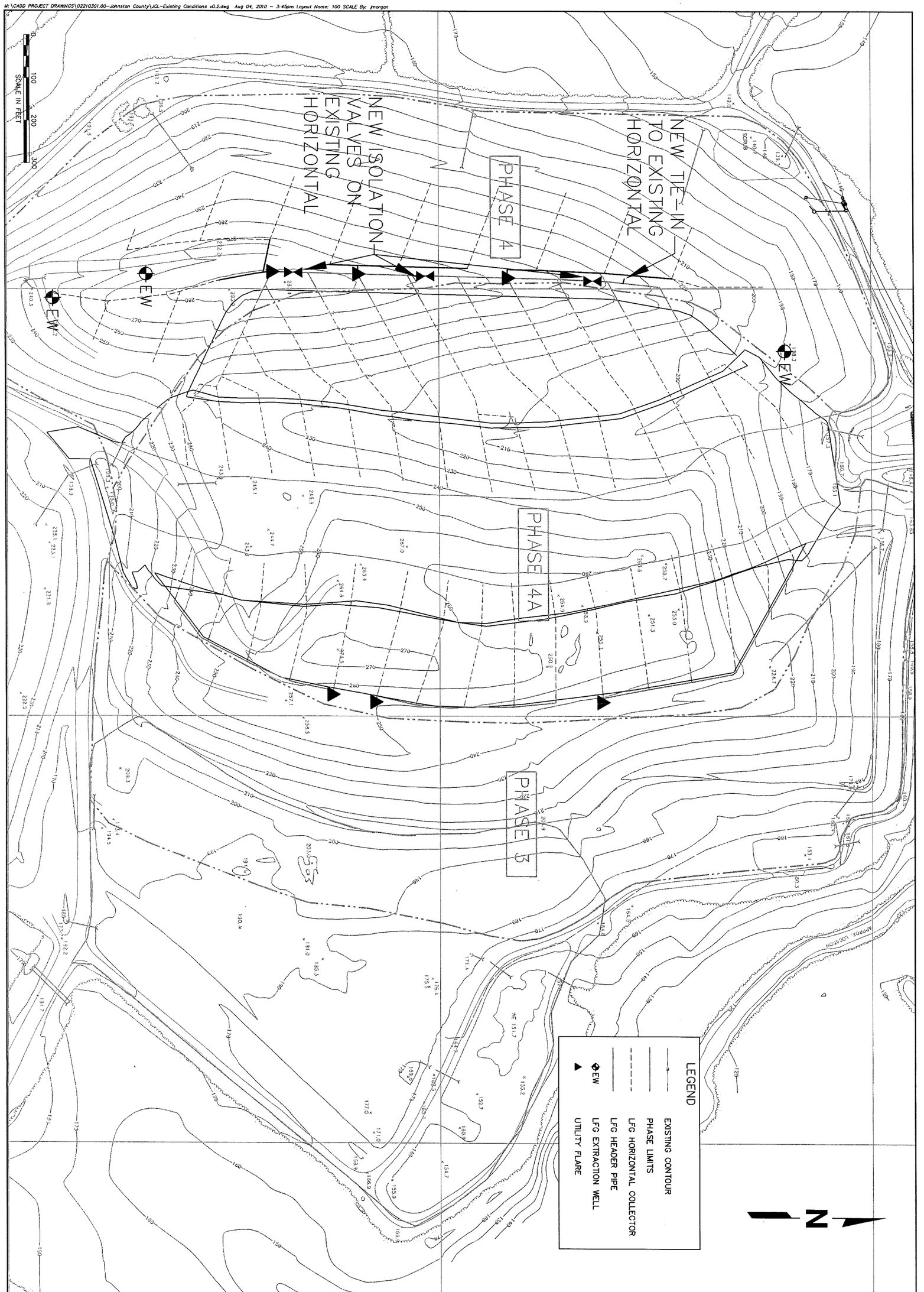

SCS ENGINEERS, PC
2520 WHITEHALL PARK DRIVE, SUITE 450
CHARLOTTE, NORTH CAROLINA 28273
PHONE: (704) 504-3107 FAX: (704) 504-3174

PROJ. NO.	DWN. BY:	Q/A RVW BY:
02210301.00	TAS	CAL
DSN. BY:	CHK. BY:	APP. BY:
JLM	SCL	SCL

DRAWING NO. 1 of 1

SCALE: AS SHOWN

DATE: 8/4/10

CLIENT

SHEET TITLE
EXISTING CONDITIONS

PROJECT TITLE
JOHNSTON COUNTY LANDFILL

NO.	REVISION	DATE
1		
2		
3		
4		
5		
6		

NORTH CAROLINA LICENSE NO. C-1457

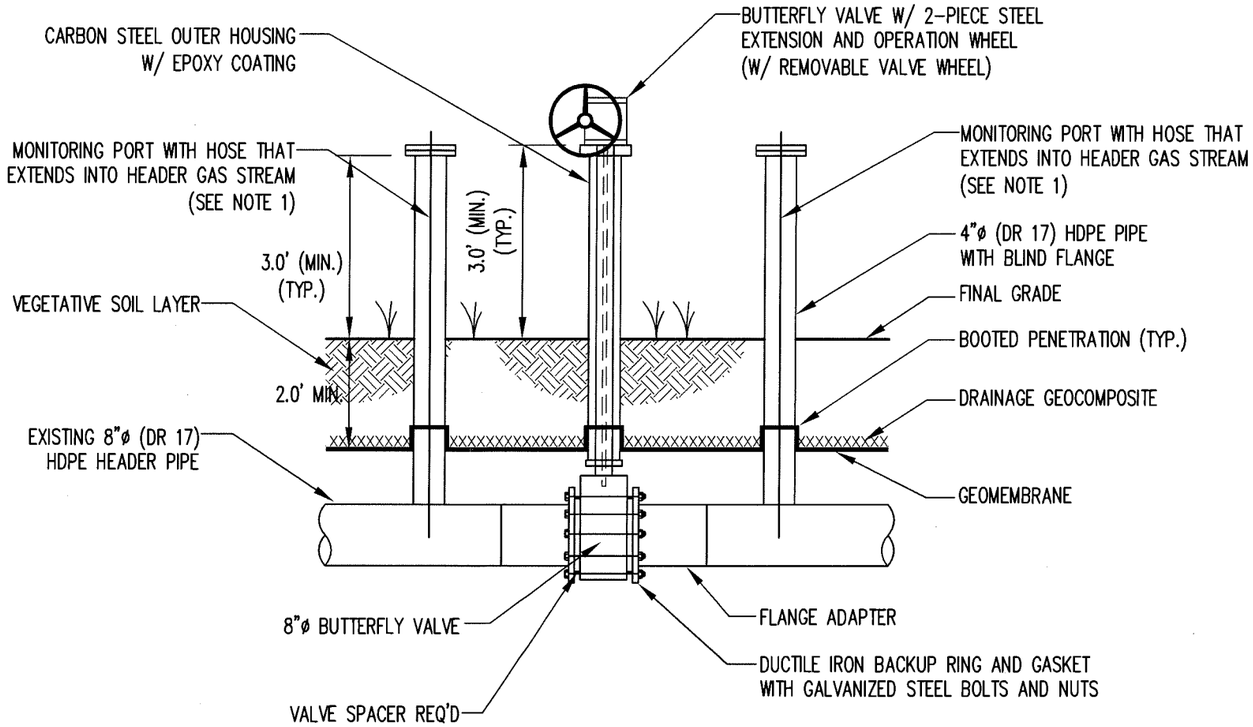

NOTE:

1. HOSES SHALL BE 1/4" BRAIDED STAINLESS STEEL WITH 1/4" QUICK CONNECT FITTING BY COLDER, OR EQUAL.

ISOLATION VALVE DETAIL

N.T.S.

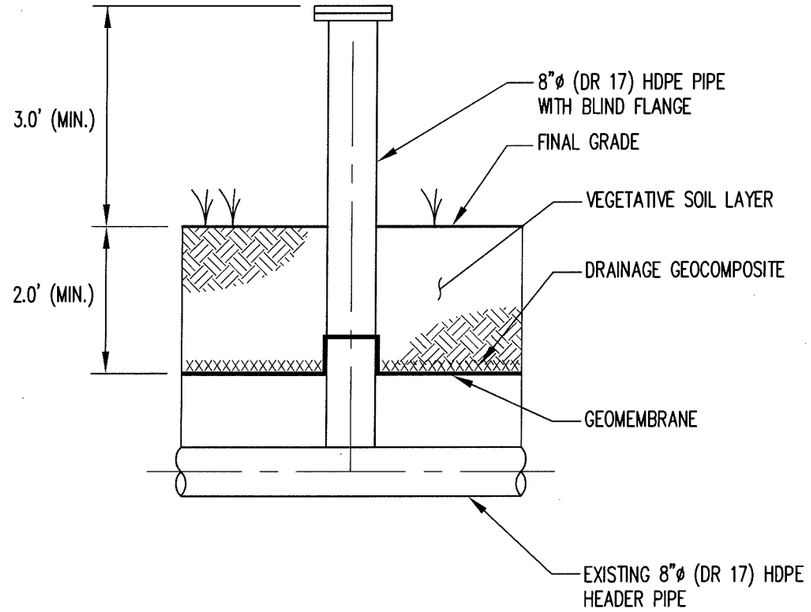

STUB-UP DETAIL

N.T.S.

RICHARDSON SMITH GARDNER & ASSOCIATES
NC LIC. NO. C-0809 (Engineering)
14 N. Boylan Ave. Raleigh, N.C. 27603
ph: 919-828-0577 fax: 919-828-3899
www.rsgengineers.com

FIGURE NO.	1
FILE NAME	JOHN-B0635
SCALE:	N.T.S.
PROJECT NO.	JOHN 09-5
CHECKED BY:	P.K.S.
DRAWN BY:	C.T.J.
DATE:	Sep. 2010

TITLE: DETAILS

G:\CAD\Johnston\John 09-5\sheets\JOHN-B0635.dwg - 9/10/2010 10:45 AM

RICHARDSON SMITH GARDNER
& ASSOCIATES
ENGINEERING & GEOLOGICAL
SERVICES
114 N BOLYAN AVENUE
RALEIGH, NORTH CAROLINA 27603

Design Modification No. 2

Project:	Johnston County C&D Landfill Area 1 Closure Smithfield, NC
Owner:	Johnston County Dept. of Public Utilities 309 E. Market Street Smithfield, NC 27577
Contractor:	ES&J Enterprises, Inc. ATTN: David Page 1555 Holland Road Autryville, NC 28318

Regulatory Review Required (Y/N): N*
*If Yes, see below.

Reference(s):
Area 1 Closure Construction Drawings - Drawing S2

Description of Modification(s):
Installation of drain to repair area that has experienced periodic sloughing over a number of years. Drain will be tied into the existing seep collection system at the existing pump station at the north end of Phase 4/Area 1.

Reason for Modification(s):
This change was required to address continued wet conditions in this location.

Attachments:
Figure 1 (Slough Area Repair and Drain (Plan View)) and Figure 2 (Slough Area Cross Sections)

Comments:

Regulatory Agency:
ATTN:

By:	**Pieter K. Scheer, P.E.**
Title:	**Project Manager**
Date:	**May 6, 2011**

Distribution:

	Owner	X	Contractor	X	Field	X	File	X	Regulatory Agency (With CQA Report)

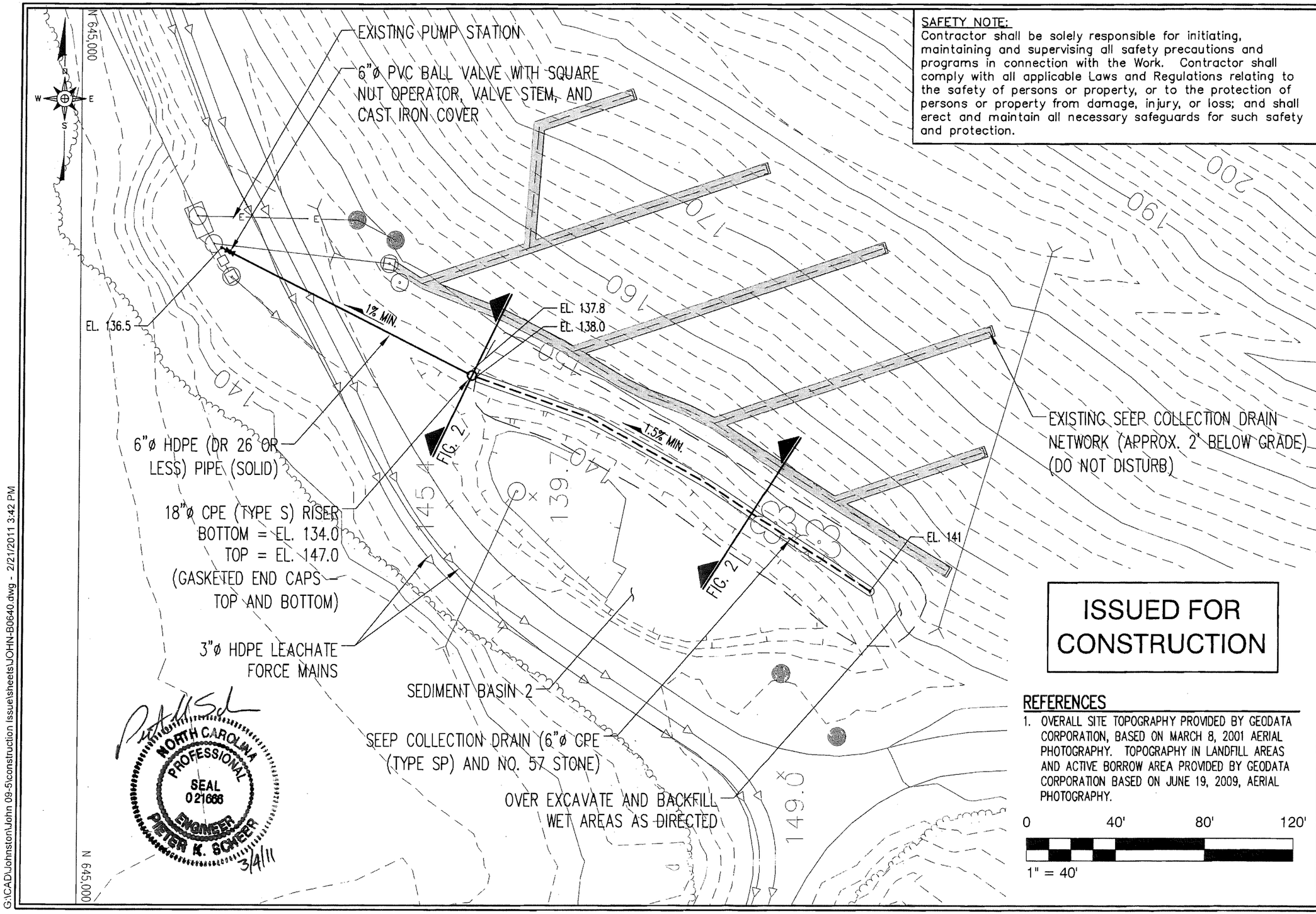

SAFETY NOTE:
Contractor shall be solely responsible for initiating, maintaining and supervising all safety precautions and programs in connection with the Work. Contractor shall comply with all applicable Laws and Regulations relating to the safety of persons or property, or to the protection of persons or property from damage, injury, or loss; and shall erect and maintain all necessary safeguards for such safety and protection.

ISSUED FOR CONSTRUCTION

REFERENCES

1. OVERALL SITE TOPOGRAPHY PROVIDED BY GEODATA CORPORATION, BASED ON MARCH 8, 2001 AERIAL PHOTOGRAPHY. TOPOGRAPHY IN LANDFILL AREAS AND ACTIVE BORROW AREA PROVIDED BY GEODATA CORPORATION BASED ON JUNE 19, 2009, AERIAL PHOTOGRAPHY.

0 40' 80' 120'

1" = 40'

RICHARDSON SMITH GARDNER & ASSOCIATES
14 N. Boylan Ave. Raleigh, N.C. 27603
NC LIC. NO. C-0828 (Engineering)
www.rsgengineers.com
ph: 919-828-0577
fax: 919-828-3899

FIGURE NO.	1
FILE NAME	JOHN-B0640
SCALE:	AS NOTED
PROJECT NO.	JOHN 09-5
CHECKED BY:	P.K.S.
DRAWN BY:	W.R.B.
DATE:	Feb. 2011

TITLE: JOHNSTON CO. C&D LANDFILL AREA 1 CLOSURE SLOUGH REPAIR AND DRAIN

G:\CAD\Johnston\John 09-5\construction Issue\sheets\JOHN-B0640.dwg - 2/21/2011 3:42 PM

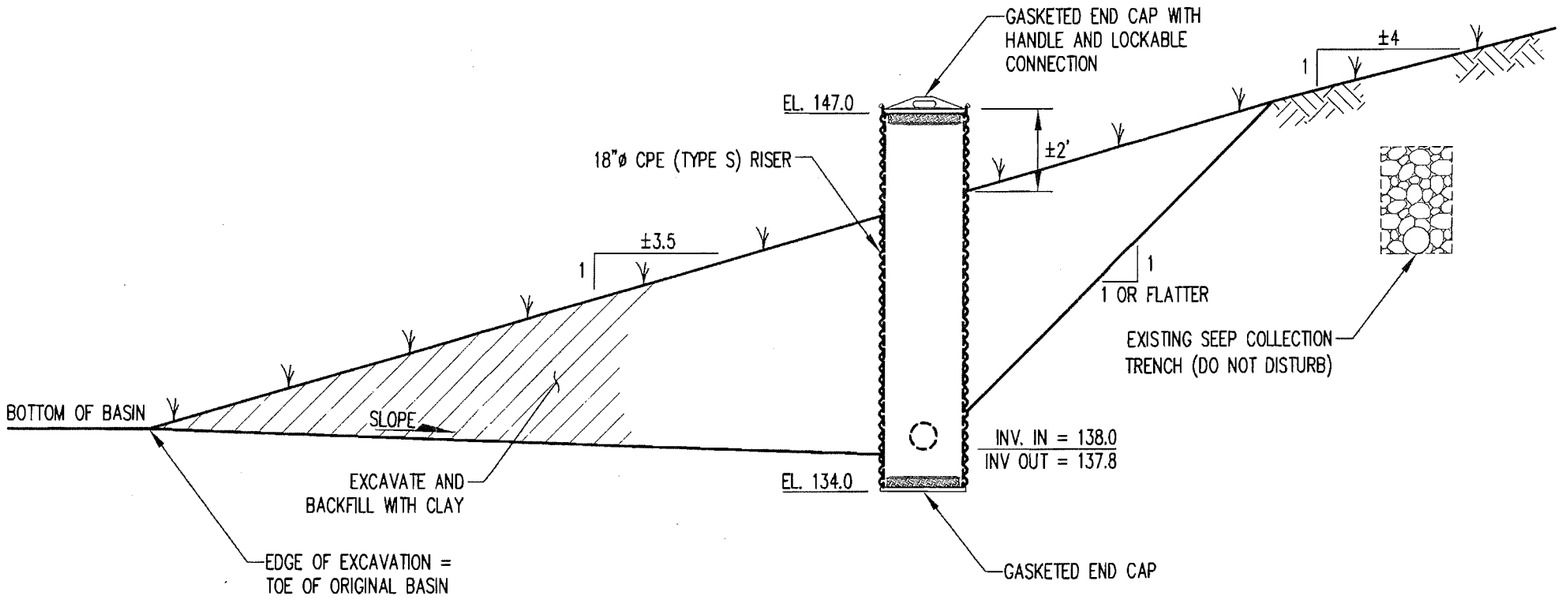

TYPICAL CROSS SECTION THROUGH 18"ø RISER

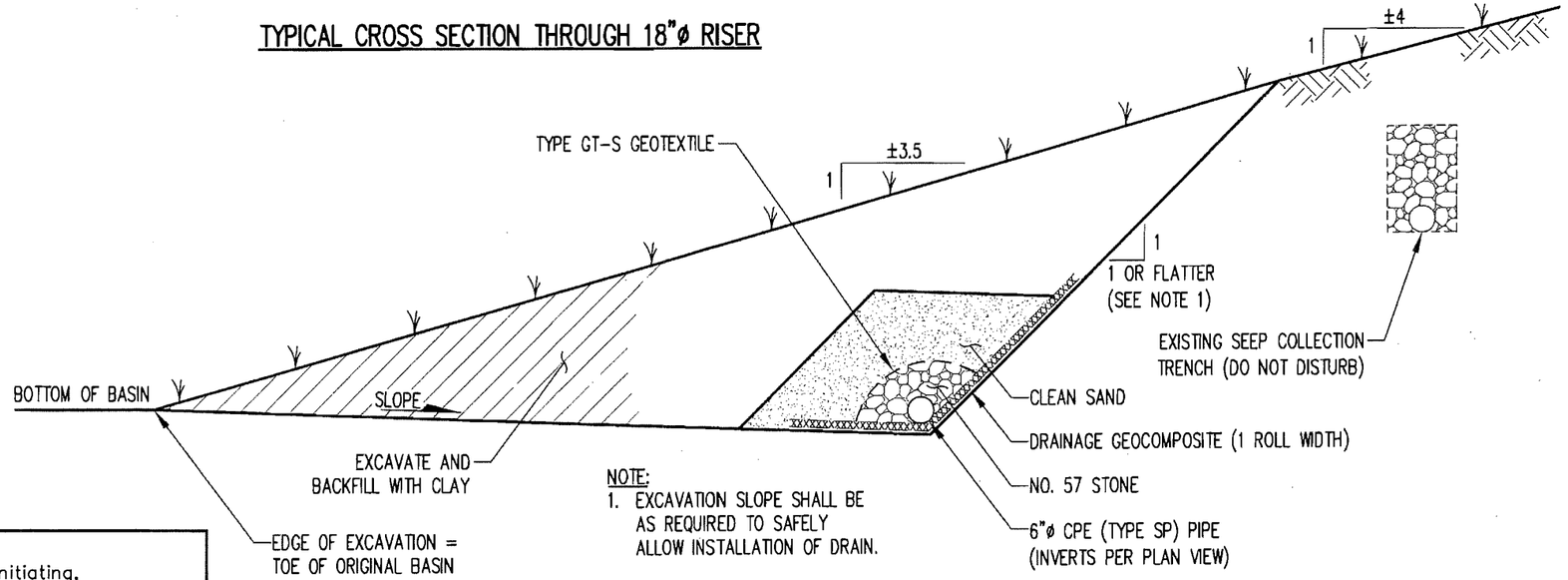

NOTE:
1. EXCAVATION SLOPE SHALL BE AS REQUIRED TO SAFELY ALLOW INSTALLATION OF DRAIN.

TYPICAL CROSS SECTION THROUGH SLOUGH REPAIR AND SEEP COLLECTION DRAIN

ISSUED FOR CONSTRUCTION

SAFETY NOTE:
Contractor shall be solely responsible for initiating, maintaining and supervising all safety precautions and programs in connection with the Work. Contractor shall comply with all applicable Laws and Regulations relating to the safety of persons or property, or to the protection of persons or property from damage, injury, or loss; and shall erect and maintain all necessary safeguards for such safety and protection.

NORTH CAROLINA PROFESSIONAL SEAL 021666 ENGINEER PIETER K. SCHEER 3/4/11

RICHARDSON SMITH GARDNER & ASSOCIATES
NC LIC. NO. C0334 (Engineering)
14 N. Boylan Ave. Raleigh, N.C. 27603
ph: 919-828-0577
fax: 919-828-3899
www.rsgengineers.com

FIGURE NO.	2
FILE NAME	JOHN-B0641
SCALE:	N.T.S.
PROJECT NO.	JOHN 09-5
CHECKED BY:	P.K.S
DRAWN BY:	W.R.B.
DATE:	Feb. 2011

TITLE: JOHNSTON CO. C&D LANDFILL
AREA 1 CLOSURE
SLOUGH AREA CROSS-SECTIONS

G:\CAD\Johnston\John 09-5\construction issue\sheets\JOHN-B0641.dwg - 2/21/2011 2:49 PM

Appendix C

Photographic Log

Construction Quality Assurance Report
Johnston County C&D Landfill - Area 1 Closure
Johnston County, North Carolina

PHOTOGRAPHIC LOG

Client: Johnston County, NC	Project: Johnston County C&D Landfill – Area 1 Closure	Project No. Johnston 09-5

Photo No. 1	Date: 10/18/10

Direction Photo Taken:

Northwest

Description:

LFG Collection Trench Installation

Photo No. 2	Date: 10/27/10

Direction Photo Taken:

North

Description:

Location of DC-12

PHOTOGRAPHIC LOG

Client: Johnston County, NC	Project: Johnston County C&D Landfill – Area 1 Closure	Project No. Johnston 09-5

Photo No. 3	Date: 10/27/10

Direction Photo Taken:

North

Description:

Exposure of Existing Final Cover System Geosynthetics

Photo No. 4	Date: 11/1/10

Direction Photo Taken:

North

Description:

Fusing HDPE Down Pipe

PHOTOGRAPHIC LOG

Client: Johnston County, NC	Project: Johnston County C&D Landfill – Area 1 Closure	Project No. Johnston 09-5

Photo No.	Date:
5	11/2/10

Direction Photo Taken:

Southeast

Description:

Installation of Geomembrane

Photo No.	Date:
6	11/6/10

Direction Photo Taken:

East

Description:

Construction Staging of LLDPE Geomembrane and Drainage Geocomposite

PHOTOGRAPHIC LOG

Client: Johnston County, NC	Project: Johnston County C&D Landfill – Area 1 Closure	Project No. Johnston 09-5

Photo No.	Date:
7	11/8/10

Direction Photo Taken:

N/A

Description:

Non-Destructive Testing of Fusion Welded Seams (Air Testing at 30psi)

Photo No.	Date:
8	11/9/10

Direction Photo Taken:

N/A

Description:

Heat Bonding a Repair at a Destructive Sample Location prior to Extrusion Welding

PHOTOGRAPHIC LOG

Client: Johnston County, NC	Project: Johnston County C&D Landfill – Area 1 Closure	Project No. Johnston 09-5

Photo No. 9	Date: 11/9/10

Direction Photo Taken:

Northeast

Description:

DP-12 Installation during Pressure Testing

Photo No. 10	Date: 11/17/10

Direction Photo Taken:

West

Description:

"T" Connection of LFG Collection Trench to LFG Header

PHOTOGRAPHIC LOG

Client: Johnston County, NC	Project: Johnston County C&D Landfill – Area 1 Closure	Project No. Johnston 09-5

Photo No. 11	Date: 11/17/10

Direction Photo Taken:

Northwest

Description:

Geosynthetics Around Down Pipe Drop Inlet

Photo No. 12	Date: 11/17/10

Direction Photo Taken:

East

Description:

Installation of DP-22

PHOTOGRAPHIC LOG

Client: Johnston County, NC	Project: Johnston County C&D Landfill – Area 1 Closure	Project No. Johnston 09-5

Photo No. 13	Date: 11/19/10

Direction Photo Taken:

East

Description:

Drainage Geocomposite deployed over LFG Collection Trench

Photo No. 14	Date: 11/19/10

Direction Photo Taken:

South

Description:

Construction Staging of LLDPE Geomembrane, LFG Gas Collection Trench w/ Drainage Geocomposite and Prepared Subgrade

PHOTOGRAPHIC LOG

Client: Johnston County, NC	Project: Johnston County C&D Landfill – Area 1 Closure	Project No. Johnston 09-5

Photo No. 15	Date: 11/20/10

Direction Photo Taken:
North

Description:

Type 2 Down Pipe Drop Inlet at DP-12

Photo No. 16	Date: 11/20/10

Direction Photo Taken:

N/A

Description:

Extrusion Welding Geomembrane Skirt to Drop Inlet

PHOTOGRAPHIC LOG

Client: Johnston County, NC	Project: Johnston County C&D Landfill – Area 1 Closure	Project No. Johnston 09-5

Photo No. 17	Date: 11/20/10

Direction Photo Taken:

Northwest

Description:

Seaming of Drainage Geocomposite

Photo No. 18	Date: 11/20/10

Direction Photo Taken:

Southwest

Description:

Installation of Vegetative Soil Layer

PHOTOGRAPHIC LOG

Client: Johnston County, NC	Project: Johnston County C&D Landfill – Area 1 Closure	Project No. Johnston 09-5

Photo No. 19	Date: 11/20/10

Direction Photo Taken:

N/A

Description:

Extrusion Welding of Geomembrane Repair

Photo No. 20	Date: 11/20/10

Direction Photo Taken:

N/A

Description:

Vacuum Box Testing of Repair

PHOTOGRAPHIC LOG

Client: Johnston County, NC	Project: Johnston County C&D Landfill – Area 1 Closure	Project No. Johnston 09-5

Photo No. 21	Date: 11/20/10

Direction Photo Taken:

North

Description:

Installation of Drain Below DC-13/DC-68

Photo No. 22	Date: 11/23/10

Direction Photo Taken:

South

Description:

Installation of Boot and Bolted Flange Around LFG Pipe Stub-Up

PHOTOGRAPHIC LOG

Client: Johnston County, NC	Project: Johnston County C&D Landfill – Area 1 Closure	Project No. Johnston 09-5

Photo No.	Date:
23	11/24/10

Direction Photo Taken:

North

Description:

Type 2 Down Pipe Drop Inlet at DP-12 After Installation of Stone and Geotextile

Photo No.	Date:
24	11/24/10

Direction Photo Taken:

N/A

Description:

Fusion Welding of Perforated Rain Gutter Piping

PHOTOGRAPHIC LOG

Client: Johnston County, NC	Project: Johnston County C&D Landfill – Area 1 Closure	Project No. Johnston 09-5

Photo No. 25	Date: 12/1/10

Direction Photo Taken:

Southeast

Description:

Down Pipe Drop Inlet at DP-11

Photo No. 26	Date: 12/14/10

Direction Photo Taken:

Northeast

Description:

Construction Progress of Vegetative Soil Layer

PHOTOGRAPHIC LOG

Client: Johnston County, NC	Project: Johnston County C&D Landfill – Area 1 Closure	Project No. Johnston 09-5

Photo No. 27	Date: 12/14/10

Direction Photo Taken:

North

Description:

Placement of Vegetative Soil Layer

Photo No. 28	Date: 1/19/11

Direction Photo Taken:

South

Description:

Emergency Gas Relief Valve

PHOTOGRAPHIC LOG

Client: Johnston County, NC	Project: Johnston County C&D Landfill – Area 1 Closure	Project No. Johnston 09-5

Photo No.	Date:
29	1/19/11

Direction Photo Taken:

South

Description:

Solar Flare Connected to LFG Header Piping

Photo No.	Date:
30	1/28/11

Direction Photo Taken:

East

Description:

Addition of Isolation Valve and Sample Ports into LFG Header Pipe

PHOTOGRAPHIC LOG

Client: Johnston County, NC	Project: Johnston County C&D Landfill – Area 1 Closure	Project No. Johnston 09-5

Photo No. 31	Date: 1/31/11

Direction Photo Taken:

South

Description:

Excavation of Rain Gutters Around Down Pipe Drop Inlet DP-22A

Photo No. 32	Date: 1/31/11

Direction Photo Taken:

North

Description:

Vegetative Soil Layer Placement Above Down Pipe Drop Inlet DP-12

PHOTOGRAPHIC LOG

Client: Johnston County, NC	Project: Johnston County C&D Landfill – Area 1 Closure	Project No. Johnston 09-5

Photo No. 33	Date: 2/8/11

Direction Photo Taken:

Southwest

Description:

Rain Gutter Installation

Photo No. 34	Date: 2/11/11

Direction Photo Taken:

N/A

Description:

Type 1 Down Pipe Drop Inlet

PHOTOGRAPHIC LOG

Client: Johnston County, NC	Project: Johnston County C&D Landfill – Area 1 Closure	Project No. Johnston 09-5

Photo No.	Date:
35	2/12/11

Direction Photo Taken:

North

Description:

Placement of No. 4 Stone in Rain Gutter

Photo No.	Date:
36	2/16/11

Direction Photo Taken:

North

Description:

Rain Gutter - Geotextile Wrapped Over Stone

PHOTOGRAPHIC LOG

Client: Johnston County, NC	Project: Johnston County C&D Landfill – Area 1 Closure	Project No. Johnston 09-5

Photo No.	Date:
37	3/13/11

Direction Photo Taken:

North

Description:

Placement of ABC on Road

Photo No.	Date:
38	3/24/11

Direction Photo Taken:

Northwest

Description:

Revegetation of Vegetative Soil Layer

PHOTOGRAPHIC LOG

Client: Johnston County, NC	Project: Johnston County C&D Landfill – Area 1 Closure	Project No. Johnston 09-5

Photo No.	Date:
39	4/13/11

Direction Photo Taken:

Southwest

Description:

Slough Repair - Seep Collection Drain

Photo No.	Date:
40	4/14/11

Direction Photo Taken:

Northeast

Description:

Backfilling Over Seep Collection Drain

Appendix D

CQA Meeting Minutes

Construction Quality Assurance Report
Johnston County C&D Landfill - Area 1 Closure
Johnston County, North Carolina

RICHARDSON SMITH GARDNER & ASSOCIATES
Engineering and Geological Services

MEMORANDUM

TO: Distribution

FROM: Pieter K. Scheer, P.E.
Richardson Smith Gardner & Associates, Inc.

DATE: October 14, 2010

SUBJECT: **Johnston County C&D Landfill - Area 1 Closure**
Construction Meeting Summary - October 14, 2010

On October 14, 2010, a construction meeting was held at the project site. The purpose of the meeting was to discuss Geosynthetics CQA requirements.

Attendees:

Rick Proctor, Johnston County
Billie Thornton, Johnston County
David Page, ES&J
Clay Carter, ES&J
Kennedy Garber, Hallaton
Pieter Scheer, RSG

Geosynthetics CQA Meeting

Mr. Scheer went over a review of specification and CQA requirements for the geosynthetics based on the **attached** agenda and relevant tables from the project CQA Manual.

Material control testing of the geosynthetics was discussed. Of the drainage geocomposite tested thus far, one transmissivity test failed to meet project criteria. This roll corresponds with Resin Lot CYF610972 from which three rolls were delivered to the site. Mr. Scheer stated that these rolls could not be used in the drainage layer above the geomembrane but could be used in the construction of the LFG collection trenches (beneath the geomembrane). Mr. Garber agreed and these rolls will be set aside for that use.

Sequencing of the geosynthetics was discussed. It was agreed that Hallaton will start in the SE portion of the Area 1 closure area and work around the south end and then along the west side, finishing up in the north end of the closure area.

The tie-in with the existing closed area was discussed. Based on the work performed by Hallaton in 2009, the existing closure area was terminated by folding the edge of the geomembrane over the geocomposite. This edge will be exposed and the edge trimmed as necessary to weld on the new geomembrane.

Attachment

cc: Meeting Attendees

GEOSYNTHETICS CQA MEETING

AGENDA

1. Status of Approvals

Material	CQA Status
30 mil Textured LLDPE Geomembrane	• GSE (30 mil Ultraflex) geomembrane passed material testing • Most material on-site
Drainage Geocomposite	• GSE geocomposite - All but 3 rolls passed material testing (3 Rolls are OK for Gas Trench) • Most material on-site
Geotextiles	• Type GT-S and Type GT-T geotextiles - material testing not yet conducted

2. Review of Specification Requirements

Geomembrane (Tech. Specification Section 02778 (LLDPE)):

- Installation in accordance with specs. and approved procedures.

- Hallaton to provide the following:
  - Trial seam log
  - Panel/Seam log
  - Non-destructive testing (vacuum/air pressure tests) log
  - Destructive sampling log
  - Repair log

  Provide copies of the above forms to RSG at least weekly for review.

- Record Information:

  Per Paragraphs C.2.c. and D.9 of Section 02778, the following information is required for the geomembrane:

  CQC Documentation: Final logs as listed above.

As-Built Drawing:

(1) Location and numbering of all panels/seams;
(2) Location of all repairs/patches;
(3) Location of all destructive test locations; and
(4) Location of all pipe penetrations and other appurtenances.

Survey information needs to be obtained/reviewed prior to placement of overlying materials.

Drainage Geocomposite (Tech. Specification Section 02712):

- Installation in accordance with specs. and approved procedures.
- 3" overlap of geonet drainage core on roll edges and 6" along roll ends. Ties every 5' on slopes $\geq$ 6H:1V or 10' on flatter slopes.
- Hallaton plan for seaming geotextile component? (Hot Wedge to be used)

Geotextiles (Tech. Specification Section 02240):

- Installation in accordance with specs. and approved installation procedures
- Hallaton plan for seaming geotextiles?

3. Review of CQA Requirements (CQA Manual Sections 5.0, 7.0, 8.0, & 10.0)

Conformance Testing of Geosynthetics Materials:

- See Status of Approvals above.

Geomembrane:

- Marking on liner for panel identification, sampling, repairs, etc. (Hallaton/RSG/Surveyor) (pen colors?) (Hallaton to use white or orange)
- Field tensiometer provided by Hallaton - should have recent calibration data
- Trial seam procedures in accordance with Section 5.4.5.1 (Hallaton to document) (Note: minimum of four coupons (2 peel/2 shear))
- Non-Destructive Testing: Vacuum or air pressure testing to be done continuously by Hallaton on all seams in accordance with Section 5.4.6.1

- Destructive Testing: Samples to be cut and tested at minimum one per 500 LF of weld in accordance with Section 5.4.6.2. (Hallaton to document) (Note: minimum of ten coupons (5 peel/5 shear)). Samples also to be sent to CQA laboratory (Geotechnics) (Typical 1 day turnaround on test results).
- Repairs and Verification: In accordance with Section 5.4.7

4. Review of Project Drawings

Key Item:

- Hallaton's Incremental Construction Strategy/Issues

Appendix E

Final Cover System CQA Data

E1. Manufacturer's Product Data Submittals and Quality Control Certificates

E2. CQA Test Results - Drainage Aggregate

E3. Soil Test Information (Representative of Borrow Area)

E4. CQC Test Results - Pressure Testing of HDPE Piping

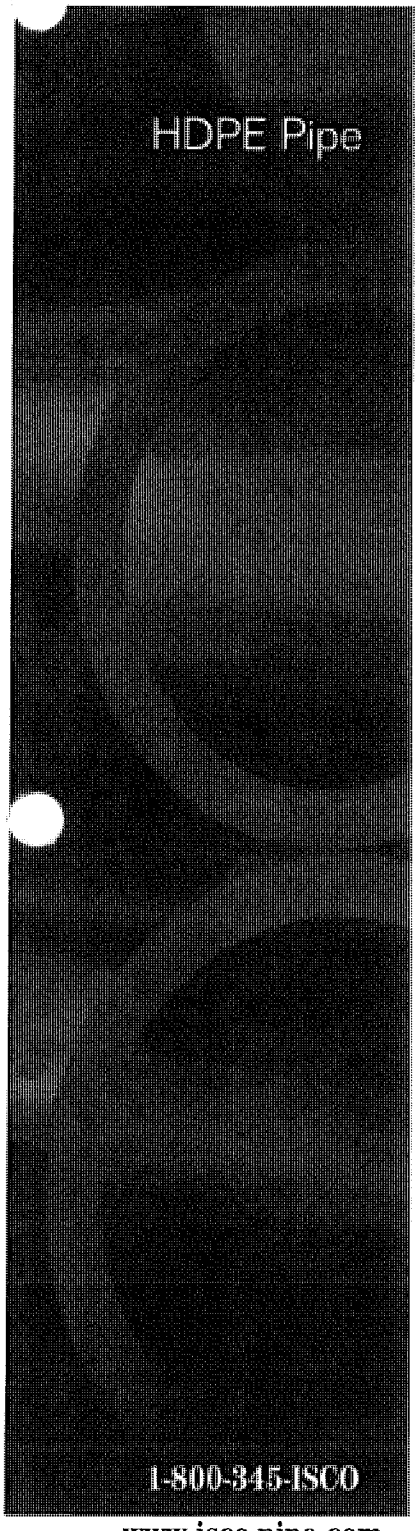

High-Density Polyethylene Pipe

Introduction

ISCO Industries, LLC is the largest high-density polyethylene pipe distributor in North America. ISCO can serve your needs anywhere in the USA and internationally. ISCO offers a complete package of HDPE piping products. Butt fusion machines are offered for sale or rental. Fusion technicians are available to provide on-site training or assistance to your project. Please call 1-800-345-ISCO for all your HDPE piping needs.

Some of The Characteristics of HDPE Pipe are:

- Economical
- Corrosion Resistant
- Zero Leak-Rate
- Hydraulically Smooth
- Fatigue and Surge Resistant
- Long Design Life
- Tappable
- Chemically Resistant
- Easily Installed
- Small to Large Diameters
- Non-Toxic, Non-Tasting
- Lightweight
- Reliable
- Flexible and Coilable
- Heat Fused
- Mechanically Joined (As Needed)
- Strong and Ductile
- Weather Resistant
- Impact Resistant
- Freeze Resistant
- Durable
- Abrasion Resistant
- Inert
- Self Restrained Pipe (Monolithic)
- Listed and Approved

© Copyright 2009 ISCO Industries, LLC. All Rights Reserved.

Important Standards for High Density Polyethylene (HDPE) Pipe

Standards important for HDPE pipe relate to the resin the pipe is made from and the standards related to manufacturing sizes and tolerances. The American Society of Testing Materials (ASTM) standard for resin from which the pipe is made is ASTM D 3350-05, Standard Specification for Polyethylene Plastics Pipe and Fittings Materials. This standard defines the physical properties of the resin that the pipe is made from.

Pipe dimensions and manufacturing requirements:

ASTM F 714-05 Standard Specification for Polyethylene (PE) Pipe (SDR-PR) Based on Outside Diameter. This standard is used for most large diameter HDPE pipe (4" to 63") applications other than gas pipe.

ASTM D 2513-05 Standard Specification for Thermoplastic Gas Pressure Pipe, Tubing and Fittings. Polyethylene pipe and other plastic for natural gas distribution are described in great detail in this standard.

ASTM D 3035-03a Standard Specification for Polyethylene (PE) Plastic Pipe (DR-PR) Based on Controlled Outside Diameter. Most HDPE water tubing (1/2 inch to 3") is made to the dimensions in this standard. While pipe sizes up to 24" are provided, very little large diameter pipe is made to this standard.

Installation Standards:

ASTM D 2321-05 Standard Practice for Underground Installation of Thermoplastic Pipe for Sewers and Other Gravity Flow Applications

ASTM D 2774-04 Standard Practice for Underground Installation of Thermoplastic Pressure Piping

ASTM F 1962 Standard Guide for Use of Maxi-Horizontal Directional Drilling for Placement of Polyethylene Pipe or Conduit under Obstacles, Including River Crossings

ASTM F 585-94 Standard Practice for Insertion of Flexible Polyethylene Pipe into Existing Sewers

American Water Works Association Standards

ANSI/AWWA C 901-2005 Polyethylene Pressure Pipe and Tubing, .5 in (13 mm) Through 3 in. (76 mm) for Water Services

ANSI/AWWA C 906-2006 Polyethylene Pipe and Fittings, 4 in (100 mm) Through 63 In (1,575 mm) for Water Distribution

Pipe Joining Standards:

ASTM F 2620 – Standard Practice for Heat Fusion of Polyethylene Pipe and Fittings

ASTM D 2657 – Standard Practice of Heat Fusion Joining of Polyolefin Pipe and Fittings

ASTM F 1290 – Standard Practice for Electrofusion Joining Polyolefin Pipe and Fittings

Fitting Standards

ASTM D 3261 Standard Specification for Butt Heat Fusion Polyethylene (PE) Plastic Fittings for Butt Fusion Polyethylene (PE) Plastic Fittings for Polyethylene (PE) Plastic Pipe and Tubing

ASTM F 1055 Standard Specification for Electrofusion Fittings for Outside Diameter Controlled Polyethylene Pipe and Tubing

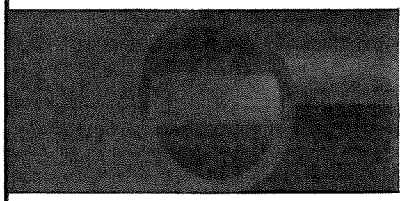

1-800-345-ISCO

www.isco-pipe.com

© Copyright 2009 ISCO Industries, LLC. All Rights Reserved.

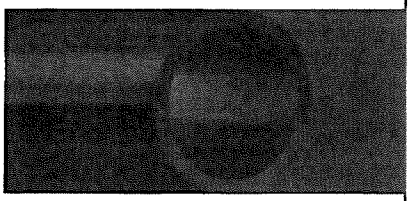

HDPE Pipe

Specifications for HDPE Pipe

The physical properties of high-density polyethylene pipe are described using ASTM D 3350-05, "Standard Specification for Polyethylene Plastic Pipe and Fittings Materials". Recently this standard was changed. The two key areas changed are, density and slow crack growth. In the 05 version, the cell classifications for density were increased from four cells to seven cells defining the density ranges for various resins.

New high performance bimodal resins, PE 4710 resins, have higher PENT test values. Slow crack grow properties can now be defined using eight cells.

As of December 2006, most HDPE pipe is made from resin with a cell classification of PE 345464C. The pipe is labeled as PE3408/3608. The physical properties for PE 345464C are:

PROPERTY VALUE		SPECIFICATION	UNIT	NOMINAL VALUE
Material Designation		PPI / ASTM		PE 3408/3608
Cell Classification		ASTM D 3350		345464C
Density	(3)	ASTM D 1505	g/cm3	0.941-943
Melt Index	(4)	ASTM D 1238	gm/ 10 min	0.05 -.11
Flexural Modulus	(5)	ASTM D 790	psi	110,000 to 140,000
Tensile Strength	(4)	ASTM D 638	psi	3,200
Slow Crack Growth				
ESCR		ASTM D 1693	hours in 100% igepal	>5,000
PENT	(6)	ASTM F 1473	hours	>100
HDB @ 73 deg F	(4)	ASTM D 2837	psi	1,600
UV Stabilizer	(C)	ASTM D 1603	%C	2 to 2.5%

The density provided is without carbon black. Typical HDPE pipe has a density of .955 to .957 with carbon black.

Types of Polyethylene Pipe

All polyethylene (PE) is not the same. In ASTM D 3350-05, low density PE is defined as having a density range of 0.919 to 0.925 g/cc; medium density has a range of 0.926 to 0.940 g/cc and high density is defined with a range from 0.941 to 0.955. All densities are without carbon black.

Density influences key properties in polyethylene materials. As the density increases, the tensile strength increases; also chemical resistance increases.

Medium density PE resins have been used for gas distribution. This original selection was made based on superior slow crack growth properties of medium density resins. Medium density pipe is designated as PE 2406 and PE 2708.

Today new bimodal resins are being used in gas distribution because of higher pressure ratings plus superior slow crack growth. These resins are designated PE 3408, PE 3608, PE 3708, PE 3710 and PE 4710.

© Copyright 2009 ISCO Industries, LLC. All Rights Reserved.

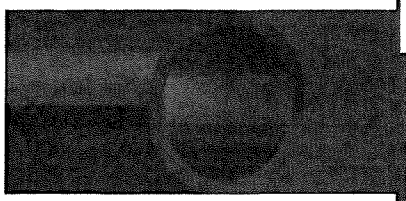

HDPE Pipe

PE 3608/3408 IPS HDPE Pipe Sizes

Pressure Rating	Nominal Size / Actual O.D.	3/4" 1.05"	1" 1.315"	1 1/4" 1.66"	1 1/2" 1.90"	2" 2.375"	3" 3.50"	4" 4.50"	5" 5.375"	5" 5.563"	6" 6.625"	7" 7.125"	8" 8.625"	10" 10.75"	12" 12.75"	14" 14.00"	16" 16.00"
DR 7 (267psi)	Min. wall	0.150"	0.188"	0.237"	0.271"	0.339"	0.500"	0.643"	0.768"	0.795"	0.946"	1.018"	1.232"	1.536"	1.821"	2.000"	2.286"
	Average I.D.	0.732"	0.917"	1.157"	1.325"	1.656"	2.440"	3.137"	3.747"	3.878"	4.619"	4.967"	6.013"	7.494"	8.889"	9.760"	11.154"
	Weight lb/ft	0.190	0.290	0.460	0.603	0.950	2.060	3.400	4.850	5.200	7.360	8.490	12.480	19.400	27.280	32.900	42.970
DR 7.3 (254psi)	Min. wall	0.144"	0.180"	0.227"	0.260"	0.325"	0.479"	0.616"	0.736"	0.762"	0.908"	0.976"	1.182"	1.473"	1.747"	1.918"	2.192"
	Average I.D.	0.745"	0.933"	1.178"	1.348"	1.685"	2.484"	3.193"	3.814"	3.947"	4.701"	5.056"	6.120"	7.628"	9.047"	9.934"	11.353"
	Weight lb/ft	0.180	0.280	0.445	0.583	0.911	1.980	3.280	4.680	5.020	7.120	8.230	12.060	18.740	26.360	31.780	41.510
DR 9 (200psi)	Min. wall	0.117"	0.146"	0.184"	0.211"	0.264"	0.389"	0.500"	0.597"	0.618"	0.736"	0.792"	0.958"	1.194"	1.417"	1.556"	1.778"
	Average I.D.	0.803"	1.005"	1.269"	1.452"	1.816"	2.676"	3.440"	4.109"	4.253"	5.064"	5.447"	6.593"	8.218"	9.747"	10.702"	12.231"
	Weight lb/ft	0.150	0.234	0.372	0.490	0.770	1.660	2.750	3.920	4.200	5.932	6.890	10.054	15.680	22.070	26.610	34.750
DR 11 (160psi)	Min. wall	0.095"	0.120"	0.151"	0.173"	0.216"	0.318"	0.409"	0.489"	0.506"	0.602"	0.648"	0.784"	0.977"	1.159"	1.273"	1.455"
	Average I.D.	0.848"	1.062"	1.340"	1.534"	1.917"	2.825"	3.633"	4.339"	4.491"	5.348"	5.752"	6.963"	8.678"	10.293"	11.302"	12.916"
	Weight lb/ft	0.130	0.200	0.312	0.410	0.640	1.387	2.300	3.290	3.520	4.990	5.780	8.460	13.140	18.490	22.300	29.120
DR 13.5 (128psi)	Min. wall	---	---	---	---	0.176"	0.259"	0.333"	0.398"	0.412"	0.491"	0.528"	0.639"	0.796"	0.944"	1.037"	1.185"
	Average I.D.	---	---	---	---	2.002"	2.950"	3.793"	4.531"	4.689"	5.585"	6.006"	7.271"	9.062"	10.748"	11.801"	13.487"
	Weight lb/ft	---	---	---	---	0.531	1.160	1.910	2.730	2.920	4.150	4.800	7.030	10.920	15.360	18.520	24.190
DR 15.5 (110psi)	Min. wall	---	---	---	---	0.153"	0.226"	0.290"	0.347"	0.359"	0.427"	0.460"	0.556"	0.694"	0.823"	0.903"	1.032"
	Average I.D.	---	---	---	---	2.050"	3.021"	3.885"	4.640"	4.802"	5.719"	6.150"	7.445"	9.280"	11.006"	12.085"	13.812"
	Weight lb/ft	---	---	---	---	0.470	1.020	1.680	2.400	2.570	3.637	4.210	6.164	9.580	13.480	16.242	21.214
DR 17 (100psi)	Min. wall	---	---	---	---	0.140"	0.206"	0.265"	0.316"	0.327"	0.390"	0.419"	0.507"	0.632"	0.750"	0.824"	0.941"
	Average I.D.	---	---	---	---	2.079"	3.064"	3.939"	4.705"	4.869"	5.799"	6.236"	7.549"	9.409"	11.160"	12.254"	14.005"
	Weight lb/ft	---	---	---	---	0.430	0.932	1.540	2.200	2.353	3.340	3.860	5.660	8.880	12.362	14.910	19.470
DR 19 (89psi)	Min. wall	---	---	---	---	---	---	0.237"	0.283"	0.293"	0.349"	0.375"	0.454"	0.566"	0.671"	0.737"	0.842"
	Average I.D.	---	---	---	---	---	---	3.998"	4.775"	4.942"	5.886"	6.330"	7.663"	9.551"	11.327"	12.438"	14.215"
	Weight lb/ft	---	---	---	---	---	---	1.390	1.980	2.120	3.010	3.480	5.100	7.920	11.140	13.430	17.540
DR 21 (80psi)	Min. wall	---	---	---	---	---	---	0.214"	0.256"	0.265"	0.315"	0.339"	0.411"	0.512"	0.607"	0.667"	0.762"
	Average I.D.	---	---	---	---	---	---	4.046"	4.832"	5.001"	5.956"	6.406"	7.754"	9.665"	11.463"	12.587"	14.385"
	Weight lb/ft	---	---	---	---	---	---	1.262	1.801	1.930	2.740	3.170	4.640	7.21	10.134	12.220	15.960
DR 26 (64 psi)	Min. wall	---	---	---	---	---	---	0.173"	0.207"	0.214"	0.255"	0.274"	0.332"	0.413"	0.490"	0.538"	0.615"
	Average I.D.	---	---	---	---	---	---	4.133"	4.937"	5.109"	6.085"	6.544"	7.922"	9.873"	11.710"	12.858"	14.695"
	Weight lb/ft	---	---	---	---	---	---	1.030	1.470	1.574	2.233	2.582	3.790	5.880	8.270	9.970	13.022
DR 32.5 (51 psi)	Min. wall	---	---	---	---	---	---	0.138"	0.165"	0.171"	0.204"	0.219"	0.265"	0.331"	0.392"	0.431"	0.492"
	Average I.D.	---	---	---	---	---	---	4.206"	5.024"	5.200"	6.193"	6.660"	8.062"	10.049"	11.918"	13.087"	14.956"
	Weight lb/ft	---	---	---	---	---	---	0.831	1.190	1.270	1.801	2.083	3.053	4.750	6.671	8.050	10.510

- Items highlighted in Blue indicates standard stocking items that are more readily available.
- **Pressures are based on using water at 23°C (73°F).**
- **Average inside diameter calculated using nominal OD and minimum wall plus 6% for use in estimating fluid flows. Actual ID will vary.**
- **Other piping sizes or DR's may be available upon request.**
- **Standard Lengths: 40' for 2"-24" 50' for 26" and larger Coils available for 3/4"-6"(8" by special order)**

1-800-345-ISCO

www.isco-pipe.com

© Copyright 2009 ISCO Industries, LLC. All Rights Reserved.

PE 3608/3408 IPS HDPE Pipe Sizes

18"	20"	22"	24"	26"	28"	30"	32"	34"	36"	42"	48"	54"	63"	Nominal Size	Pressure Rating
18.00"	20.00"	22.00"	24.00"	26.00"	28.00"	30.00"	32.00"	34.00"	36.00"	42.00"	48.00"	54.00"	62.99"	Actual O.D.	
2.571"	2.857"	3.143"	3.429"	---	---	---	---	---	---	---	---	---	---	Min. wall	
12.549"	13.943"	15.337"	16.731"	---	---	---	---	---	---	---	---	---	---	Average I.D.	DR 7 (267psi)
54.370	67.130	80.170	96.680	---	---	---	---	---	---	---	---	---	---	Weight lb/ft	
2.466"	2.740"	3.014"	3.288"	3.562"	---	---	---	---	---	---	---	---	---	Min. wall	
12.773"	14.192"	15.611"	17.030"	18.449"	---	---	---	---	---	---	---	---	---	Average I.D.	DR 7.3 (254psi)
52.530	64.850	78.140	93.390	110.769	---	---	---	---	---	---	---	---	---	Weight lb/ft	
2.000"	2.222"	2.444"	2.667"	2.889"	3.111"	3.333"	3.556"	---	---	---	---	---	---	Min. wall	
13.760"	15.289"	16.818"	18.347"	19.876"	21.404"	22.933"	24.462"	---	---	---	---	---	---	Average I.D.	DR 9 (200psi)
43.970	54.280	65.412	78.180	92.535	107.312	123.183	140.183	---	---	---	---	---	---	Weight lb/ft	
1.636"	1.818"	2.000"	2.182"	2.364"	2.545"	2.727"	2.909"	3.091"	3.273"	---	---	---	---	Min. wall	
14.531"	16.145"	17.760"	19.375"	20.989"	22.604"	24.218"	25.833"	27.447"	29.062"	---	---	---	---	Average I.D.	DR 11 (160psi)
36.840	45.490	54.820	65.520	77.440	89.785	103.076	117.285	132.411	148.454	---	---	---	---	Weight lb/ft	
1.333"	1.481"	1.630"	1.778"	1.926"	2.074"	2.222"	2.370"	2.519"	2.667"	3.111"	3.556"	---	---	Min. wall	
15.173"	16.859"	18.545"	20.231"	21.917"	23.603"	25.289"	26.975"	28.661"	30.347"	35.404"	40.462"	---	---	Average I.D.	DR 13.5 (128psi)
30.610	37.790	45.550	54.440	64.261	74.522	85.543	97.324	109.905	123.208	167.675	217.895	---	---	Weight lb/ft	
1.161"	1.290"	1.419"	1.548"	1.677"	1.806"	1.935"	2.065"	2.194"	2.323"	2.710"	3.097"	3.484"	---	Min. wall	
15.538"	17.265"	18.991"	20.717"	22.444"	24.170"	25.897"	27.623"	29.350"	31.076"	36.255"	41.435"	46.614"	---	Average I.D.	DR 15.5 (110psi)
26.849	33.146	40.107	47.731	56.532	65.563	75.264	85.672	96.714	108.424	147.568	192.774	243.921	---	Weight lb/ft	
1.059"	1.176"	1.294"	1.412"	1.529"	1.647"	1.765"	1.882"	2.000"	2.118"	2.471"	2.824"	3.176"	---	Min. wall	
15.755"	17.506"	19.256"	21.007"	22.758"	24.508"	26.259"	28.009"	29.760"	31.511"	36.762"	42.014"	47.266"	---	Average I.D.	DR 17 (100psi)
24.640	30.420	36.810	43.810	51.856	60.154	69.068	78.557	88.700	99.457	135.372	176.813	223.713	---	Weight lb/ft	
0.947"	1.053"	1.158"	1.263"	1.368"	1.474"	1.579"	1.684"	1.789"	1.895"	2.211"	2.526"	2.842"	---	Min. wall	
15.992"	17.768"	19.545"	21.322"	23.099"	24.876"	26.653"	28.429"	30.206"	31.983"	37.314"	42.644"	47.975"	---	Average I.D.	DR 19 (89psi)
22.200	27.410	33.162	39.470	46.701	54.189	62.196	70.755	79.865	89.571	121.925	159.198	201.502	---	Weight lb/ft	
0.857"	0.952"	1.048"	1.143"	1.238"	1.333"	1.429"	1.524"	1.619"	1.714"	2.000"	2.286"	2.571"	3.000"	Min. wall	
16.183"	17.981"	19.779"	21.577"	23.375"	25.173"	26.971"	28.770"	30.568"	32.366"	37.760"	43.154"	48.549"	56.631"	Average I.D.	DR 21 (80psi)
20.200	24.940	30.172	35.990	42.486	49.266	56.585	64.370	72.657	81.446	110.874	144.833	183.253	248.550	Weight lb/ft	
0.692"	0.769"	0.846"	0.923"	1.000"	1.077"	1.154"	1.231"	1.308"	1.385"	1.615"	1.846"	2.077"	2.423"	Min. wall	
16.532"	18.369"	20.206"	22.043"	23.880"	25.717"	27.554"	29.391"	31.228"	33.065"	38.575"	44.088"	49.597"	57.854"	Average I.D.	DR 26 (64 psi)
16.480	20.350	24.620	29.300	34.648	40.187	46.135	52.494	59.264	66.444	90.393	118.082	149.464	202.810	Weight lb/ft	
0.554"	0.615"	0.677"	0.738"	0.800"	0.862"	0.923"	0.985"	1.046"	1.108"	1.292"	1.477"	1.662"	1.938"	Min. wall	
16.826"	18.695"	20.565"	22.434"	24.304"	26.174"	28.043"	29.913"	31.782"	33.652"	39.260"	44.869"	50.478"	58.881"	Average I.D.	DR 32.5 (51 psi)
13.300	16.420	19.863	23.640	27.940	32.421	37.196	42.340	47.773	53.581	72.893	95.233	120.556	163.620	Weight lb/ft	

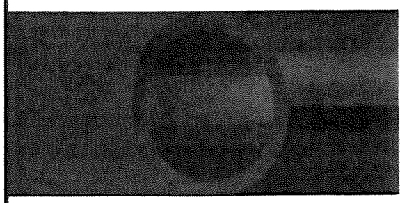

HDPE Pipe

- Items highlighted in Blue indicates standard stocking items that are more readily available.
- Pressures are based on using water at 23°C (73°F).
- Average inside diameter calculated using nominal OD and minimum wall plus 6% for use in estimating fluid flows. Actual ID will vary.
- Other piping sizes or DR's may be available upon request.
- Standard Lengths:
  40' for 2"-24"
  50' for 26" and larger
  Coils available for 3/4"-6"(8" by special order)

1-800-345-ISCO

www.isco-pipe.com

© Copyright 2009 ISCO Industries, LLC. All Rights Reserved.

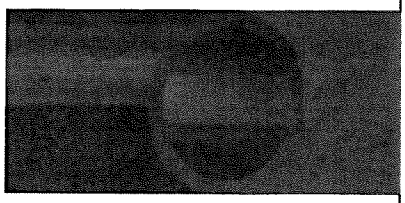

IPS HDPE Fittings

Pressure Rating of Molded Fittings are equal to pipe of same DR.

Molded Fittings from 3608 resin:	
DR	**Pressure Rating**
7	267 psi
9	200 psi
11	160 psi
13.5	128 psi
15.5	110 psi
17	100 psi
21	80 psi
26	64 psi
32.5	51 psi

Molded Fittings from 4710 resin:	
DR	**Pressure Rating**
7	336 psi
9	252 psi
11	202 psi
13.5	161 psi
15.5	139 psi
17	126 psi
21	101 psi
26	81 psi
32.5	64 psi

Note: *Size/DR listings shown are commonly requested. Many DR options not listed are available. Please consult an ISCO representative for availability*

IPS Fittings Molded 90° Ell

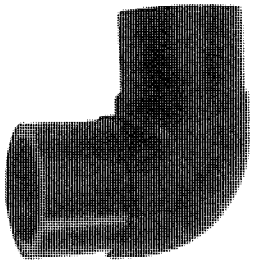

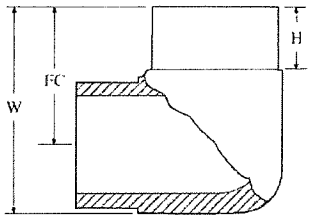

IPS Fittings Molded 90° Ell

Nominal Size(in)	Pipe OD(in)	DR	Part #	Dimensions H (in)	FC (in)	W (in)	Weight (lbs)	Shipping Method
3/4	1.05	11	ISMF9007511IPS	2.05	2.68	3.2	0.05	FedEx
1	1.315	11	ISMF9001111IPS	2.17	2.91	3.57	0.1	FedEx
1-1/4	1.66	11	ISMF90125111IPS	2.44	3.35	4.18	0.15	FedEx
1-1/2	1.9	11	ISMF9015111IPS	2.64	3.7	4.65	0.22	FedEx
2	2.375	09	ISMF9002091IPS	2.5	4.25	5.815	0.5	FedEx
		11	ISMF9002111IPS	"	"	"	0.43	"
3	3.5	09	ISMF9003091IPS	3	5.25	7.4	1.5	FedEx
		11	ISMF9003111IPS	"	"	"	1.2	"
		17	ISMF9003171IPS	"	"	"	0.8	"
4	4.5	09	ISMF9004091IPS	3	5.875	8.25	3	FedEx
		11	ISMF9004111IPS	"	"	"	2.4	"
		17	ISMF9004171IPS	"	"	"	1.6	"
6	6.625	09	ISMF9006091IPS	4.125	8	12.5	7	FedEx
		11	ISMF9006111IPS	"	"	"	6.7	"
		17	ISMF9006171IPS	"	"	"	4.8	"
8	8.625	11	ISMF9008111IPS	6	12	16.5	15	FedEx
		17	ISMF9008171IPS	"	"	"	10	"
10	10.75	11	ISMF9010111IPS	6	13.25	18.875	27	FedEx
		17	ISMF9010171IPS	"	"	"	18	"
12	12.75	11	ISMF9012111IPS	7.5	15.88	22.555	41	FedEx
		17	ISMF9012171IPS	"	"	"	27	"

© Copyright 2009 ISCO Industries, LLC. All Rights Reserved.

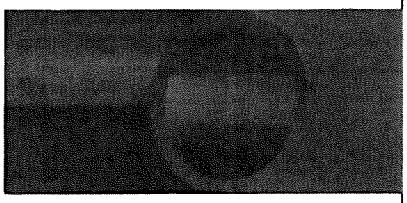

IPS HDPE Fittings

Pressure Rating of Molded Fittings are equal to pipe of same DR.

Molded Fittings from 3608 resin: DR	Pressure Rating
7	267 psi
9	200 psi
11	160 psi
13.5	128 psi
15.5	110 psi
17	100 psi
21	80 psi
26	64 psi
32.5	51 psi

Molded Fittings from 4710 resin: DR	Pressure Rating
7	336 psi
9	252 psi
11	202 psi
13.5	161 psi
15.5	139 psi
17	126 psi
21	101 psi
26	81 psi
32.5	64 psi

Note: *Size/DR listings shown are commonly requested. Many DR options not listed are available. Please consult an ISCO representative for availability*

IPS Fittings Molded Tees

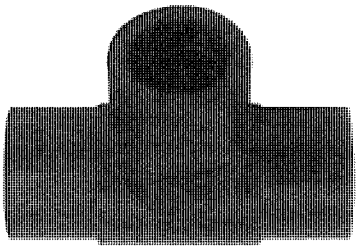

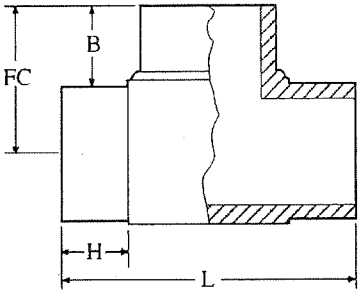

IPS Fittings Molded Tees

Nominal Pipe Size(in)	OD(in)	DR	Part #	Dimensions L(in)	H(in)	FC(in)	B(in)	Weight (lbs)	Shipping Method
3/4	1.05	11	ISMFTE07511IPS	5	1.77	2.5	1.98	0.1	FedEx
1	1.315	11	ISTETE01111PS	5.67	1.77	2.83	2.17	0.17	FedEx
1-1/4	1.66	11	ISMFTE012511IPS	6.61	2.01	3.31	2.48	0.3	FedEx
1-1/2	1.9	11	ISMFTE01511IPS	7.99	2.52	4	3.05	0.47	FedEx
2	2.375	09	ISMFTE0209IPS	8.5	2.5	4.26	3.07	1	FedEx
		11	ISMFTE0211IPS	"	"	"	"	0.82	"
3	3.5	09	ISMFTE0309IPS	11.375	3	5.75	4	2.3	FedEx
		11	ISMFTE0311IPS	"	"	"	"	2.15	"
		17	ISMFTE0317IPS	"	"	"	"	1.45	"
4	4.5	09	ISMFTE0409IPS	12.25	3	6.25	4	4	FedEx
		11	ISMFTE0411IPS	"	"	"	"	3.8	"
		17	ISMFTE0417IPS	"	"	"	"	2.58	"
6	6.625	09	ISMFTE0609IPS	16.25	4	8.25	4.94	11	FedEx
		11	ISMFTE0611IPS	18	4.5	9	5.69	10	"
		17	ISMFTE0617IPS	"	"	"	"	7	"
8	8.625	11	ISMFTE0811IPS	23.75	5.85	11.9	7.59	25	FedEx
		17	ISMFTE0817IPS	"	"	"	"	17	"
10	10.75	11	ISMFTE1011IPS	27	6.15	13.5	8.13	43	FedEx
		17	ISMFTE1017IPS	"	"	"	"	29	"
12	12.75	11	ISMFTE1211IPS	31.6	7.5	15.9	9.53	67	FedEx
		17	ISMFTE1217IPS	"	"	"	"	46	"

© Copyright 2009 ISCO Industries, LLC. All Rights Reserved.

IPS HDPE Fittings

Pressure Rating of Reducing Tees are equal to pipe of same DR.

Red. Tees from 3608 resin: DR	Pressure Rating
7	267 psi
9	200 psi
11	160 psi
13.5	128 psi
15.5	110 psi
17	100 psi
21	80 psi
26	64 psi
32.5	51 psi

Red Tees from 4710 resin: DR	Pressure Rating
7	336 psi
9	252 psi
11	202 psi
13.5	161 psi
15.5	139 psi
17	126 psi
21	101 psi
26	81 psi
32.5	64 psi

Note: *Size/DR listings shown are commonly requested. Many DR options not listed are available. Please consult an ISCO representative for availability*

IPS Fittings Reducing Tee

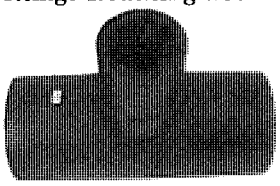

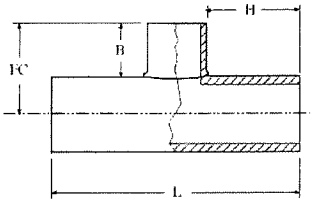

IPS Fittings Reducing Tee

Nominal Size(in)	Pipe OD(in)	DR	Part #	Dimensions L (in)	H (in)	FC (in)	B (in)	Weight (lbs)	Shipping Method
3 x 2	3.5 x 2.375	11	ISFFRT03X0211IP	16	6.125	7.25	5.5	5	FedEx
4 x 2	4.5 x 2.375	11	ISFFRT04X0211IP	16	6.125	7.75	5.5	6	FedEx
4 x3	4.5 x 3.5	11	ISFFRT04X0311IP	24	9.5	6.5	4.25	10	FedEx
6 x2	6.625 x 2.375	11	ISFFRT06X0211IP	16	6.125	8.75	5.4375	10	FedEx
6 x3	6.625 x 3.5	11	ISFFRT06X0311IP	24	9.5	7.5	4.1875	16	FedEx
6 x4	6.625 x 4.5	11	ISFFRT06X0411IP	24	9	9.25	5.9375	19	FedEx
8 x2	8.625 x 2.375	11	ISFFRT08X0211IP	16	6.125	9.75	5.4375	16	FedEx
8 x3	8.625 x 3.5	11	ISFFRT08X0311IP	24	9.5	8.625	4.3125	25	FedEx
8 x4	8.625 x 4.5	11	ISFFRT08X0411IP	24	9	10.25	5.9375	28	FedEx
8 x6	8.625 x 6.625	11	ISFFRT08X0611IP	28	9.8125	12.25	7.9375	38	FedEx
10 x 2	10.75 x 2.375	11	ISFFRT10X0211IP	16	6.125	10.875	5.5	23	FedEx
10 x3	10.75 x 3.5	11	ISFFRT10X0311IP	24	9.5	9.625	4.25	36	FedEx
10 x 4	10.75 x 4.5	11	ISFFRT10X0411IP	24	9	11.375	6	39	FedEx
10 x 6	10.75 x 6.625	11	ISFFRT10X0611IP	28	9.8125	13.375	8	51	FedEx
10 x 8	10.75 x 8.625	11	ISFFRT10X0811IP	30	9.875	13.625	8.25	60	FedEx
12 x 2	12.75 x 2.375	11	ISFFRT12X0211IP	16	6.125	11.875	5.5	32	FedEx
12 x 3	12.75 x 3.5	11	ISFFRT12X0311IP	24	9.5	10.625	4.25	48	FedEx
12 x 4	12.75 x 4.5	11	ISFFRT12X0411IP	24	9	12.375	6	51	FedEx
12 x 6	12.75 x 6.625	11	ISFFRT12X0611IP	28	9.8125	14.375	8	66	LTL
12 x 8	12.75 x 8.625	11	ISFFRT12X0811IP	30	9.875	14.625	8.25	75	LTL
12 x 10	12.75 x 10.75	11	ISFFRT12X1011IP	30	8.75	12.875	6.5	85	LTL
14 x 2	14 x 2.375	11	ISFFRT14X0211IP	16	6.125	12.5	5.5	38	FedEx
14 x 3	14 x 3.5	11	ISFFRT14X0311IP	24	9.5	11.25	4.25	57	FedEx
14 x 4	14 x 4.5	11	ISFFRT14X0411IP	24	9	13	6	60	FedEx
14 x 6	14 x 6.625	11	ISFFRT14X0611IP	28	9.813	15	8	76	LTL
14 x 8	14 x 8.625	11	ISFFRT14X0811IP	30	9.875	15.25	8.25	87	LTL
14 x 10	14 x 10.75	11	ISFFRT14X1011IP	30	8.75	13.50	6.5	97	LTL
16 x2	16 x 2.375	11	ISFFRT16X0211IP	16	6.125	13.50	5.5	49	FedEx
16 x 3	16 x 3.5	11	ISFFRT16X0311IP	24	9.5	12.25	4.25	74	FedEx
16 x 4	16 x 4.5	11	ISFFRT16X0411IP	24	9	14	6	77	FedEx
16 x 6	16 x 6.625	11	ISFFRT16X0611IP	28	9.813	16	8	95	LTL
16 x 8	16 x 8.625	11	ISFFRT16X0811IP	30	9.875	16.25	8.25	107	LTL
16 x 10	16 x 10.75	11	ISFFRT16X1011IP	30	8.75	14.5	6.5	117	LTL
16 x 12	16 x 12.75	11	ISFFRT16X1211IP	32	8.6	16.5	8.5	133	LTL
18 x 2	18 x 2.375	11	ISFFRT18X0211IP	16	6.125	14.5	5.5	61	FedEx
18 x 3	18 x 3.5	11	ISFFRT18X0311IP	24	9.5	13.25	4.25	92	FedEx
18 x 4	18 x 4.5	11	ISFFRT18X0411IP	24	9	15	6	95	FedEx
18 x 6	18 x 6.625	11	ISFFRT18X0611IP	28	9.813	17	8	117	LTL
18 x 8	18 x 8.625	11	ISFFRT18X0811IP	30	9.875	17.25	8.25	130	LTL
18 x 10	18 x 10.75	11	ISFFRT18X1011IP	30	8.75	15.5	6.5	140	LTL
18 x 12	18 x 12.75	11	ISFFRT18X1211IP	32	8.6	17.5	8.5	157	LTL
20 x 6	20 x 6.625	11	ISFFRT20X0611IP	28	9.81	15.125	5.125	121	LTL
20 x 8	20 x 8.625	11	ISFFRT20X0811IP	30	9.88	17	7	138	LTL

Sizes 18" x 12" and smaller are commonly stocked in DR 9. Other DRs are available upon request.

© Copyright 2009 ISCO Industries, LLC. All Rights Reserved.

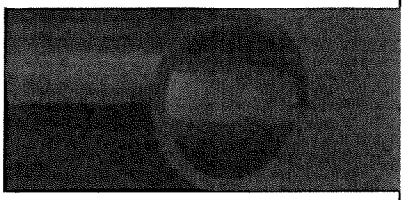

IPS HDPE Fittings

Pressure Rating of Con. Reducers are equal to pipe of same DR.

Reducers from 3608 resin:	
DR	**Pressure Rating**
7	267 psi
9	200 psi
11	160 psi
13.5	128 psi
15.5	110 psi
17	100 psi
21	80 psi
26	64 psi
32.5	51 psi

Reducers from 4710 resin:	
DR	**Pressure Rating**
7	336 psi
9	252 psi
11	202 psi
13.5	161 psi
15.5	139 psi
17	126 psi
21	101 psi
26	81 psi
32.5	64 psi

Note: *Size/DR listings shown are commonly requested. Many DR options not listed are available. Please consult an ISCO representative for availability.*

1-800-345-ISCO

www.isco-pipe.com

IPS Fittings Concentric Reducer

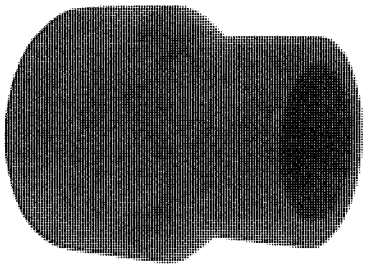

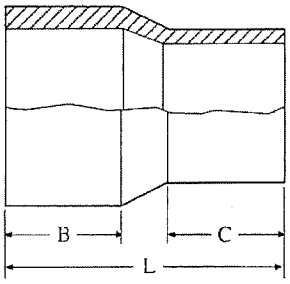

IPS Fittings Concentric Reducer

Nominal Size(in)	Pipe OD(in)	DR	Part #	Dimensions L (in)	B (in)	C (in)	Weight (lbs)	Shipping Method
1 x 3/4	1.315 x 1.05	09	ISMFCR01X3/49.3	4.5	1.5	2.5	0.1	FedEx
		11	ISMFCR01X3/411	"	"	"	"	"
1-1/4 x 1	1.66 x 1.315	11	ISMFCR0125X111	4.3	1.8	1.25	0.1	FedEx
1-1/2 x 3/4	1.9 x 1.05	09	ISMFCR015X3/491	5.688	2.5	2.5	0.2	FedEx
		11	ISMFCR015X3/411	"	"	"	"	"
1-1/2 x 1	1.9 x 1.315	09	ISMFCR015X01931	6	3.25	1.25	0.2	FedEx
		11	ISMFCR015X0111	"	"	"	"	"
1-1/2 x 1-1/4	1.9 x 1.66	11	ISFFCR01.5X1.25	4	1.88	2	0.2	FedEx
2 x 3/4	2.375 x 1.05	11	ISMFCR02X07511I	6.25	3.25	1.25	0.3	FedEx
2 x 1	2.375 x 1.315	11	ISMFCR02X0111IP	6.25	3.25	1.25	0.3	FedEx
2 x 1-1/4	2.375 x 1.66	11	ISMFCR02X012511	6.25	3.25	2.25	0.3	FedEx
2 x 1-1/2	2.375 x 1.9	09	ISMFCR02X01509I	7	3	2.5	0.3	FedEx
		11	ISMFCR02X01511I	"	"	"	"	"
3 x 2	3.5 x 2.375	09	ISMFCR03X0209IP	6.75	3	2.5	0.7	FedEx
		11	ISMFCR03X0211IP	"	"	"	"	"
4 x 2	4.5 x 2.375	11	ISMFCR04X0211IP	7.5	3	2.5	1.2	FedEx
		17	ISMFCR04X0217IP	"	"	"	0.8	"
4 x 3	4.5 x 3.5	09	ISMFCR04X0309IP	7.25	2.75	2.75	4	FedEx
		11	ISMFCR04X0311IP	"	"	"	3	"
		17	ISMFCR04X0317IP	"	"	"	2	"
5 x 4	5.563 x 4.5	11	ISMFCR05X0411IP	3.75	1.75	1.25	2.5	FedEx
6 x 3	6.625 x 3.5	11	ISMFCR06X0311IP	11.42	5.12	3.94	3	FedEx
		17	ISMFCR06X0317IP	"	"	"	2	"
6 x 4	6.625 x 4.5	09	ISMFCR06X0409IP	11	4.5	3.5	4	FedEx
		11	ISMFCR06X0411IP	"	"	"	3.5	"
		17	ISMFCR06X0417IP	"	"	"	2.4	"
6 x 5	6.625 x 5.563	11	ISMFCR06X0511IP	3.75	1.75	1.25	2.5	FedEx
8 x 6	8.625 x 6.625	09	ISFFCR08X0609IP	12	4.5	4	9	FedEx
		11	ISMFCR08X0611IP	"	"	"	7.3	"
		17	ISMFCR08X0617IP	"	"	"	5	"
10 x 8	10.75 x 8.625	09	ISFFCR10X0809IP	16	6	6	16	FedEx
		11	ISFFCR10X0811IP	"	"	"	13	"
		17	ISFFCR10X0817IP	"	"	"	9	"
12 x 8	12.75 x 8.625	11	ISFFCR12X0811IP	16	6	6	10	FedEx
		17	ISFFCR12X0817IP	"	"	"	13	"
12 x 10	12.75 x 10.75	09	ISFFCR12X1009IP	16	6	6	25	FedEx
		11	ISFFCR12X1011IP	"	"	"	21	"
		17	ISFFCR12X1017IP	"	"	"	14	"
14 x 12	14.0 x 12.75	09	ISFFCR14X1209IP	18	7	7	34	FedEx
		11	ISFFCR14X1211IP	"	"	"	28	"
		17	ISFFCR14X1217IP	"	"	"	19	"

© Copyright 2009 ISCO Industries, LLC. All Rights Reserved.

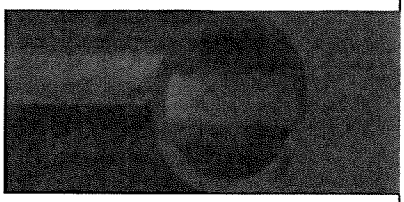

IPS HDPE Fittings

Pressure Rating of Flanges are equal to pipe of same DR.

Flanges from 3608 resin:	
DR	**Pressure Rating**
7	267 psi
9	200 psi
11	160 psi
13.5	128 psi
15.5	110 psi
17	100 psi
21	80 psi
26	64 psi
32.5	51 psi

Flanges from 4710 resin:	
DR	**Pressure Rating**
7	336 psi
9	252 psi
11	202 psi
13.5	161 psi
15.5	139 psi
17	126 psi
21	101 psi
26	81 psi
32.5	64 psi

Note: *Size/DR listings shown are commonly requested. Many DR options not listed are available. Please consult an ISCO representative for availability*

IPS Fittings Flange Adapter

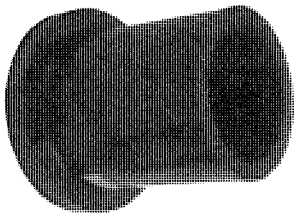

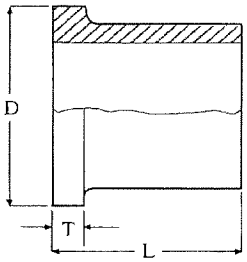

IPS Fittings Flange Adapter

Nominal Size	Pipe OD (in)	DR	D (in)	Dimensions T(in)	L (in)	Weight (lbs)	Shipping Method
3/4	1.05	11	2	0.2	4	0.1	FedEx
1	1.315	11	2.375	0.21 - 0.24	4	0.1	FedEx
1-1/4	1.66	11	2.75	0.25	4 - 6	0.2	FedEx
1-1/2	1.9	11	3.125	0.29 - 0.3	4 - 6	0.2	FedEx
2	2.375	7	3.75 - 4.0	0.39 - 0.44	5.5 - 6	1	FedEx
		9	"	0.39 - 0.44	5.5 - 6	1	"
		11,17	"	0.3 - 0.55	5.5 - 6.125	1	"
3	3.5	7,9	4.625 - 5	0.6 - 0.63	6	2	FedEx
		11,17	"	0.4 - 0.67	6 - 6.125	2	"
4	4.5	7	6.0 - 6.625	0.54 - 0.8	6	3	FedEx
		9	"	0.54 - 0.8	6	3	"
		11,17,21	"	0.5 - 0.8	6 - 7.125	3	"
6	6.625	7	8.125 - 8.625	1.1 - 1.14	8 - 8.125	8	FedEx
		9	"	1.1 - 1.14	8 - 8.125	8	"
		11,17,21	"	0.7 - 1.02	8 - 8.07	4.07 - 7	"
		26, 32.5	"	1	8	7	"
8	8.625	7	10.6 - 10.75	1.4 - 1.5	8.625 - 9	11	FedEx
		9	"	1.13 - 1.47	8.625 - 9	10.0 - 11	"
		11	"	0.8 - 1.26	9.02 - 11	7.0 - 10	"
		17	"	0.9 - 1.02	9.02 - 11	5.0 - 10	"
		21,26, 32.5	"	0.9 - 1	11	5.0 - 10	"
10	10.75	7	12.75 - 13	1.28 - 2	8.75 - 12	19	FedEx
		9	"	1.28 - 2	8.75 - 12	19	"
		11	"	1.1 - 1.38	9.02 - 12	18	"
		17	"	0.9 - 1.28	9.02 - 12	18	"
		21,26, 32.5	"	1.1 - 1.28	11.0 - 12	18	"
12	12.75	7	15 - 15.75	1.54 - 2.3	9.125 - 12	25	FedEx
		9	"	1.54 - 2.3	9.125 - 12	25	"
		11	"	1.3 - 1.54	10.79 - 12	24	"
		17	"	1 - 1.54	10.79 - 12	24	"
		21,26, 32.5	"	1.3 - 1.5	11.0 - 12	24	"
14	14.00	7	17.0 - 17.5	1.5 - 2.35	12	41.8	FedEx
		9	"	1.5 - 2.35	12	35.9	"
		11	"	1.5 - 1.7	11.0 - 12	40	"
		17	"	1.1 - 1.6	11.0 - 12	40	"
		21,26, 32.5	"	1.5 - 1.6	11 - 11.5	40	"
16	16.00	7	19.5 - 20	1.75 - 2.69	12	56.2	FedEx
		9	"	1.75 - 2.69	12	48.5	"
		11	"	1.7 - 1.9	11.5 - 12	60	"
		17	"	1.2 - 1.8	11.5 - 12	60	"
		21,26, 32.5	"	1.7 - 1.8	11.5 - 12	60	"

© Copyright 2009 ISCO Industries, LLC. All Rights Reserved.

IPS Fittings Back Up Rings (For use with the Flange Adapter)

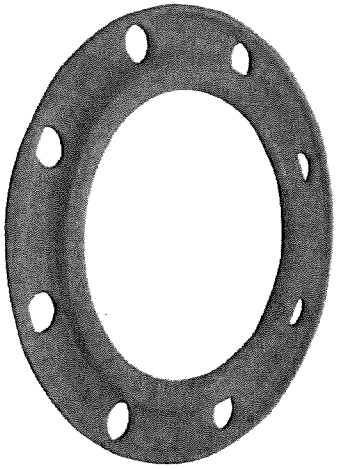

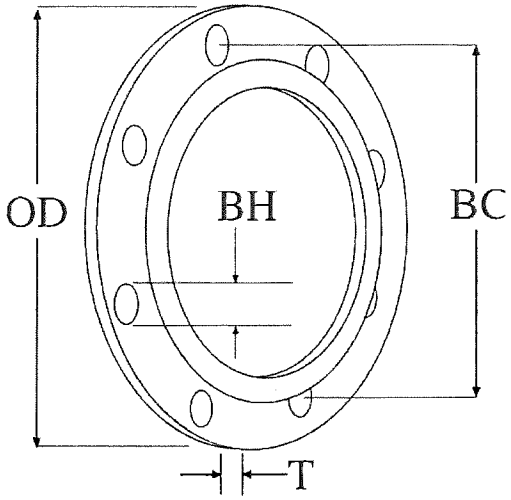

IPS Fittings Back Up Rings (For use with the Flange Adapter)

Nominal Size(in)	Pipe OD(in)	Material	Dimensions OD(in)	T(in)	Bolts(#)	BH(in)	BC(in)	Pressure Rating	Weight (lbs)	Shipping Method
3/4	1.05	Ductile Iron	3.875	0.5 - 0.53	4	0.625	2.75	267	1	FedEx
1	1.315	Ductile Iron	4.25	0.53 - 0.56	4	0.625	3.125	267	1	FedEx
		Stainless Steel	"	0.56	"	"	"	267	2	"
1 1/4	1.66	Ductile Iron	4.625	0.63	4	0.625	3.5	267	2	FedEx
1 1/2	1.9	Ductile Iron	5	0.69	4	0.625	3.875	267	2	FedEx
		Stainless Steel	"	0.69	"	"	"	267	2	"
2	2.375	Ductile Iron	6	0.5, 0.75	4	0.75	4.75	160, 267	1.5, 3	FedEx
		PP Coated DI	6.5	0.71	"	"	"	128, 275	1.8	"
		Stainless Steel	6	0.4, 0.75	"	"	"	160, 267	2, 2.6	"
3	3.5	Ductile Iron	7.5	0.53, 0.94	4	0.75	6	160, 267	2.5, 4.5	FedEx
		PP Coated DI	7.8	0.71, 0.73	"	"	"	128, 275	2.4 "	
		Stainless Steel	7.5	0.4, 0.94	"	"	"	128, 267	3, 5"	
4	4.5	Ductile Iron	9	0.55, 0.94	8	0.75	7.5	160, 267	3.5, 5.5	FedEx
		PP Coated DI	9.21	0.71, 0.98	"	"	"	128, 275	2.5, 4.2	"
		Stainless Steel	9	0.5 - 0.94	"	"	"	128, 267	5, 6"	
6	6.625	Ductile Iron	11	0.63, 1	8	0.875	9.5	160, 267	4.5, 7.5	FedEx
		PP Coated DI	11.57	0.79, 1.18	"	"	"	128, 275	4.0, 7.1	"
		Stainless Steel	11	0.6, 1	"	"	"	128, 267	6, 9"	
8	8.625	Ductile Iron	13.5	0.85, 1.125	8	0.875	11.75	160, 267	8, 12	FedEx
		PP Coated DI	13.86	1.1, 1.34	"	"	"	128, 275	7.5, 11.6	"
		Stainless Steel	13.5	0.7 - 1.13	"	"	"	128, 267	9, 13	"
10	10.75	Ductile Iron	16	0.98, 1.19	12	1	14.25	160, 267	12, 16	FedEx
		PP Coated DI	16.61	1.22, 1.52	"	"	"	128, 275	10.5, 16	"
		Stainless Steel	16	0.9, 1.19	"	"	"	128, 267	12, 18	"
12	12.75	Ductile Iron	19	1.25 - 1.5	12	1	17	160 - 267	20, 25	FedEx
		PP Coated DI	19.37	1.61, 2.01	"	"	"	128, 275	17.5, 28.2	"
		Stainless Steel	19	1.05 - 1.77	"	"	"	128 - 267	21 - 37	"

© Copyright 2009 ISCO Industries, LLC. All Rights Reserved.

IPS Fittings Cap

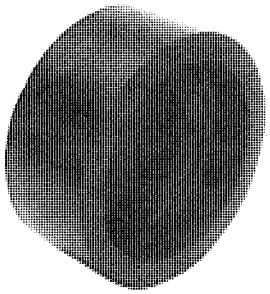

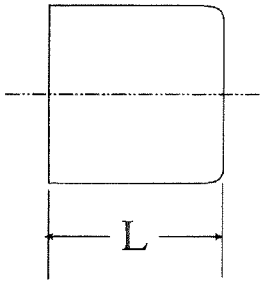

IPS Fittings Cap

Nominal Size(in)	Pipe OD(in)	DR	Part #	Dimensions L (in)	Weight (lbs)	Shipping Method
3/4	1.05	11	ISMFCP07511IPS	2.375	0.05	FedEx
1	1.315	11	ISMFCP01111IPS	2.375	0.1	FedEx
1 1/4	1.66	11	ISMFCP012511IPS	2.25	0.1	FedEx
1 1/2	1.9	11	ISMFCP01511IPS	2.83	0.25	FedEx
2	2.375	09	ISMFCP0209IPS	3.25	0.3	FedEx
		11	ISMFCP0211IPS	"	"	"
3	3.5	09	ISMFCP0309IPS	3.25	0.8	FedEx
		11	ISMFCP0311IPS	"	"	"
4	4.5	09	ISMFCP0409IPS	5.5	2	FedEx
		11	ISMFCP0411IPS	"	"	"
6	6.625	09	ISMFCP0609IPS	4.5	3	FedEx
		11	SMFCP0611IPS	"	"	"
8	8.625	11	ISMFCP08111PS	4.75	4.4	FedEx
10	10.75	11	ISMFCP1011IPS	4	13	FedEx
12	12.75	11	ISMFCP1211IPS	4	18	FedEx
14	14.00	7	ISFFCP1407IPS	4	21	FedEx
		11	ISFFCP1411IPS	"	21	"
		7	ISFFCP1407IPSLG	16	53	FedEx
		11	ISFFCP1411IPSLG	"	44	"
16	16.00	7	ISFFCP1607IPS	5	35	FedEx
		11	ISFFCP1611IPS	4	28	"
		7	ISFFCP1607IPSLG	16	76	FedEx
		11	ISFFCP1611IPSLG	"	57	"
18	18.00	7	ISFFCP1807IPS	5	44	FedEx
		11	ISFFCP1811IPS	5	44	"
		7	ISFFCP1807IPSLG	16	96	FedEx
		11	ISFFCP1811IPSLG	"	81	"
20	20.00	7	ISFFCP2007IPS	6	65	FedEx
		11	ISFFCP2011IPS	5	55	"
		7	ISFFCP2007IPSLG	16	130	LTL
		11	ISFFCP2011IPSLG	"	100	"
22	22.00	7	ISFFCP2207IPS	6	79	FedEx
		11	ISFFCP2211IPS	5	66	"
		7	ISFFCP2207IPSLG	16	157	LTL
		11	ISFFCP2211IPSLG	"	121	"
24	24.00	11	ISFFCP2411IPS	6	94	FedEx
		11	ISFFCP2411IPSLG	16	159	LTL

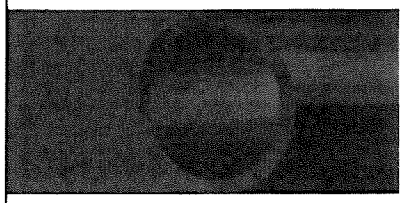

IPS HDPE Fittings

Pressure Rating of Caps are equal to pipe of same DR.

Caps from 3608 resin: DR	Pressure Rating
7	267 psi
9	200 psi
11	160 psi
13.5	128 psi
15.5	110 psi
17	100 psi
21	80 psi
26	64 psi
32.5	51 psi

Cap from 4710 resin: DR	Pressure Rating
7	336 psi
9	252 psi
11	202 psi
13.5	161 psi
15.5	139 psi
17	126 psi
21	101 psi
26	81 psi
32.5	64 psi

Note: *Size/DR listings shown are commonly requested. Many DR options not listed are available. Please consult an ISCO representative for availability.*

1-800-345-ISCO

www.isco-pipe.com

© Copyright 2009 ISCO Industries, LLC. All Rights Reserved.

3408 Electrofusion Couplings - 1/2" to 12" IPS/ DIPS

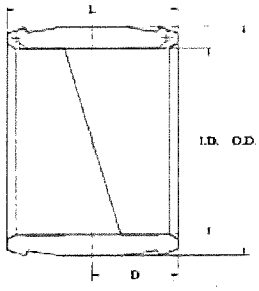

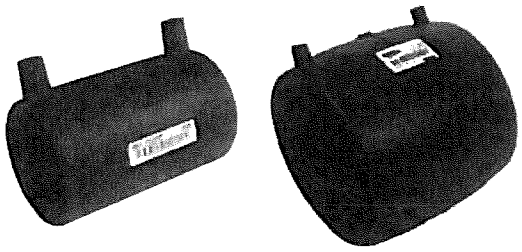

Part Number	Nominal Size	Pin	Fusion Time Setting	Weight Lbs.	I.D. Max.	I.D. Min.	O.D Nom.	Stab Depth Nom.	Height Nom.	Length Nom.
5760019	1/2" CTS	4.7mmR	A	0.12	0.633	0.615	1.13	1.36	2.01	3.15
5757546	1/2" IPS AWWA	4.7mmR	A	0.138	0.854	0.834	1.38	1.42	2.15	2.98
5757515	3/4" CTS AWWA	4.7mmR	A	0.15	0.89	0.87	1.38	1.42	2.15	2.98
5760022	3/4" IPS AWWA	4.7mmR	A	0.18	1.073	1.065	1.72	1.36	2.48	3.46
5760023	1" CTS AWWA	4.7mmR	A	0.2	1.142	1.132	1.72	1.36	2.52	3.46
5750639	1" IPS AWWA	4.7mmR	A	0.2	1.331	1.321	1.88	1.57	2.63	3.46
5760026	1 1/4" IPS AWWA	4.7mmR	A	0.3	1.69	1.675	2.27	1.82	3.04	3.86
5754049	1 1/4" SIDR	3.0mm	A	0.331	1.595	1.62	2.27	1.82	3.0	3.7
5754075	1 1/4 " Duct	3.0mm	A	0.324	1.520	1.490	2.27	1.82	3.0	3.7
5760028	1 1/2 IPS AWWA	4.7mmR	A	0.395	1.917	1.907	2.6	1.89	3.36	4.33
5756611*	2" CTS AWWA	Solid/4.7	M	0.305	2.145	2.13	2.89	2.125	3.59	4.37
5760030	2" IPS AWWA	4.7mmR	A	0.582	2.42	2.395	3.16	2.09	3.78	4.72
5756062	2" IPS Conduit	3.0mm	A	0.305	2.42	2.4	2.82	2.09	3.55	4.31
5754047	2 1/2" Conduit	3.0mm	A	0.552	2.956	2.894	3.5	2.06	4.17	4.25
10000358	3" IPS AWWA	4.7mmR	A	1.263	3.56	3.545	4.54	2.72	5.18	5.59
10000360	4" IPS FM (CL 200) AWWA	4.7mmR	A	2.547	4.545	4.51	5.57	3.0	6.51	6.14
5751970	4 DIPS AWWA	Solid/4.7	M	2.673	4.846	4.810	6.06	3.46	6.06	6.93
5750661*	5" IPS (140 mm)	Solid/4.7	A	3.08	5.547	5.524	6.93	3.54	7.56	7.17
10000359	6" IPS FM (CL 200) AWWA	4.7mmR	A	4.94	6.69	6.665	8.17	4.1	8.7	8.35
5751971*	6" DIPS AWWA	Solid/4.7	M	6.513	6.94	6.91	8.74	4.09	8.74	8.19
5750867	7" IPS	3.0mm	A	4.85	7.145	7.105	8.74	4.09	8.94	7.19
10000361	8" IPS FM (CL 200) AWWA	4.7mmR	A	7.125	8.7	8.67	10.63	4.7	11.2	9.48
5751972*	8" DIPS AWWA	Solid/4.7	M	11.875	9.105	9.075	11.14	5.08	11.14	10.16
5757544	10 IPS FM (CL 150) AWWA	4.7mmR	A	16.8	10.801	10.766	13.25	5.0	13.41	10.5
10000362	10 IPS FM (CL 200) AWWA	Solid/4.7	M	16.8	10.801	10.766	13.25	5.0	13.41	10.5
5751973*	10" DIPS AWWA	Solid/4.7	M	19	11.071	11.031	13.7	5.5	13.7	11.0
5757545	12" IPS FM (CL 150) AWWA	4.7mmR	A	25.2	12.795	12.74	15.7	5.5	15.84	11.5
10000363	12" IPS FM (CL 200) AWWA	Solid/4.7	M	25.5	12.795	12.74	15.7	5.5	15.84	11.5
5751974*	12 DIPS AWWA	Solid/4.7	M	31.5	13.162	13.122	16.2	6.5	16.2	13.1

A=Automatic Identification for Fusion Time. M=Manual Setting or Bar Code Setting.
* Special Lead Requirements.

Central Electrofusion Products

1-800-345-ISCO

www.isco-pipe.com

© Copyright 2009 ISCO Industries, LLC. All Rights Reserved.

PARTS LIST		
ITEM	SIZE/DR	DESCRIPTION
1	6",8",10",12" DR 26 HDPE PIPE	4 ROWS OF 1/2" DIA. HOLES, 90 DEG. APART, 4" C-C

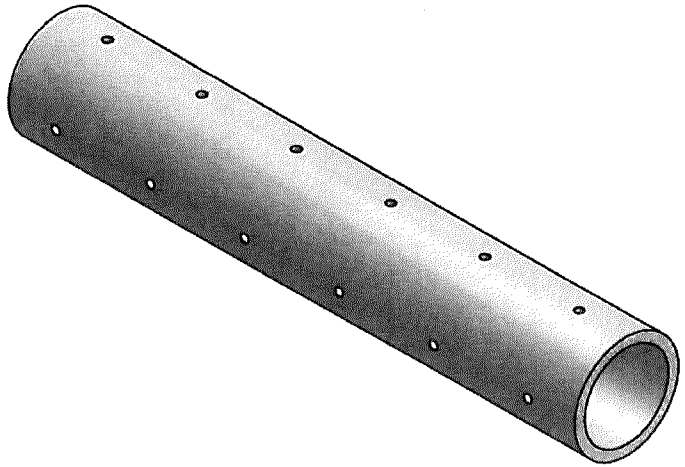

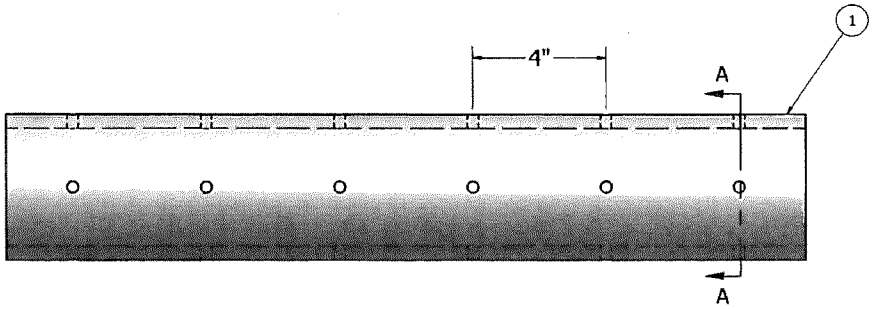

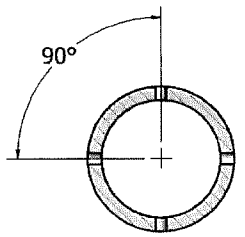

SECTION A-A

THIS DRAWING IS INTELLECTUAL PROPERTY OF ISCO INDUSTRIES, LLC ("ISCO"). THIS IS INTENDED FOR THE MANUFACTURE, INSTALLATION, AND IDENTIFICATION OF THE PRODUCT DEPICTED AND SHALL NOT BE CIRCULATED OF REPRODUCED WITHOUT PERMISSION FROM AN AUTHORIZED AGEN OF ISCO. A CONTRACT FOR PERFORMANCE IS VALID ONLY UPON SIGNATURE FROM DULY AUTHORIZED AGENT OF YOUR COMPANY. THIS DRAWING IS A SPECIALTY MANUFACTURED PRODUCT; THEREFORE IS NON-RETURNABLE. ISCO COVENANTS THAT THIS PRODUCT IS FIT FOR A PARTICULAR PURPOSE AND HAS IMPLIED WARRANTY OF MERCHANTABILITY. THE USER OF THIS DRAWING ASSUMES AND RELEASES ISCO FROM ANY LIABILITY IN CONNECTION WITH THE PRODUCT.

ISCO INDUSTRIES

CUSTOMER NAME: ES&J-JOHNSON COUNTY LF

DRAWING TITLE: 6",8",10",12" DR 26 PERF PATTERN

DRAWN	DATE	SIZE	FILE LOCATION	REV
NLA	11/6/2008	C		
APPROVED BY:	DATE	SALESMAN		
		ORDER #	SCALE	SHEET 1 OF 1

PARTS LIST			
ITEM	QTY	PART NUMBER	DESCRIPTION
1	1	40162699	16" DR 26 HDPE FABRICATED TEE
2	4 sq ft	29010012	HDPE RING FROM 1" SHEET 24" OD
3	2.5 sq ft	29010012	HDPE END PLATE FROM 1" SHEET 18" OD

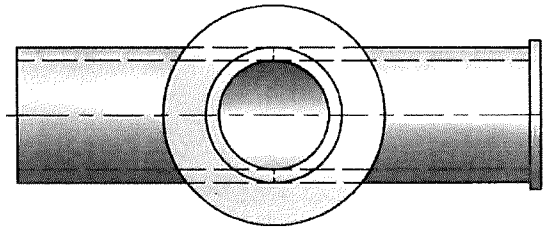

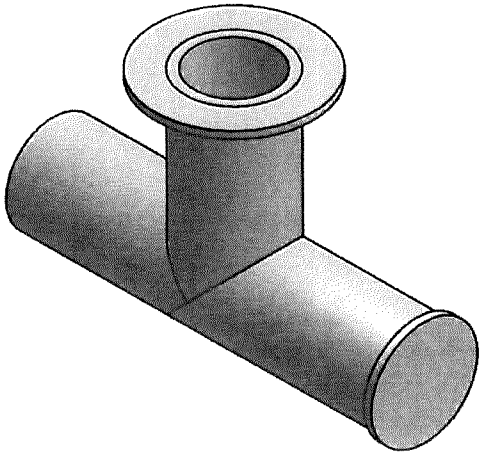

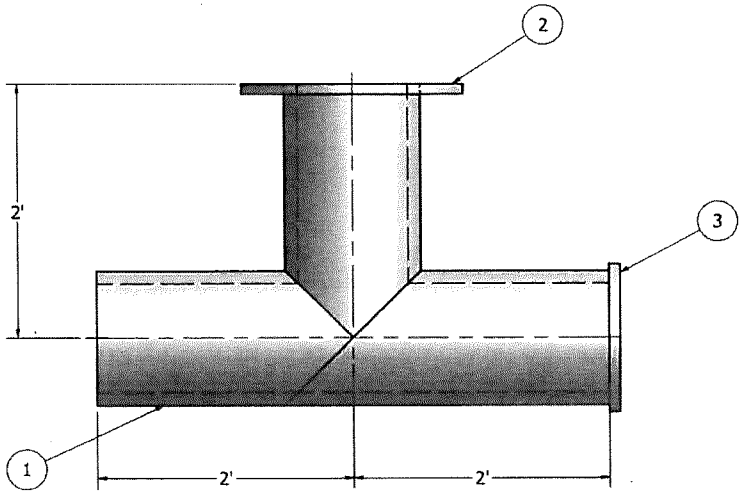

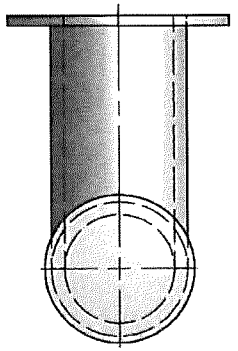

THIS DRAWING IS INTELLECTUAL PROPERTY OF ISCO INDUSTRIES, LLC ("ISCO"). THIS IS INTENDED FOR THE MANUFACTURE, INSTALLATION, AND IDENTIFICATION OF THE PRODUCT DEPICTED AND SHALL NOT BE CIRCULATED OR REPRODUCED WITHOUT PERMISSION FROM AN AUTHORIZED AGENT OF ISCO. A CONTRACT FOR PERFORMANCE IS VALID ONLY UPON ISCO'S FULFILLMENT OF YOUR COMPANY'S CREDIT APPROVAL REQUIREMENTS. THE USER OF THIS DRAWING ASSUMES AND RELEASES ISCO FROM ANY LIABILITY IN CONNECTION WITH THE PRODUCT. THIS DRAWING IS A SPECIALTY-MANUFACTURED PRODUCT; AND THEREFORE IS NON-RETURNABLE. ISCO COVENANTS THAT THIS PRODUCT IS FIT FOR A PARTICULAR PURPOSE AND HAS APPLIED WARRANTY OF MERCHANTABILITY - THE USER OF THIS DRAWING ASSUMES AND

ISCO INDUSTRIES		CUSTOMER NAME: ES&J-JOHNSON COUNTY LF	
		DRAWING TITLE: 16" HDPE TEE w/HDPE RING	
DRAWN: NLA	7/12/2010	SIZE: C	FILE LOCATION: DF/SL/ES&J-072110
APPROVED BY:	DATE	TERRITORY REPRESENTATIVE: CARL ERDLE	REV #/DATE
		ORDER #	SCALE
			SHEET 1 OF 1

PARTS LIST			
ITEM	QTY	PART NUMBER	DESCRIPTION
1	1	10162699	16" DR 26 HDPE FABRICATED TEE
2	2	29010012	HDPE END PLATE FROM 1" SHEET 18" OD TYP. 2
3	1 ft	10122610	12" DR 26 HDPE PIPE
4	1 ft	10062610	6" DR 26 HDPE PIPE

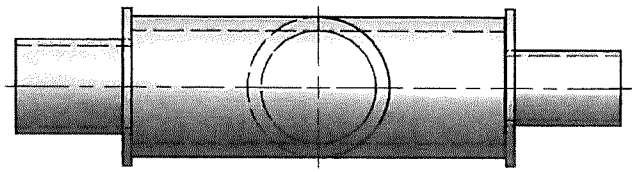

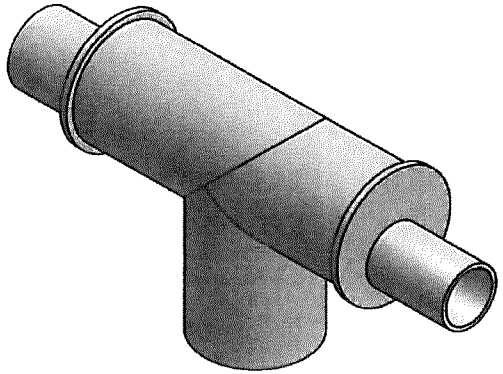

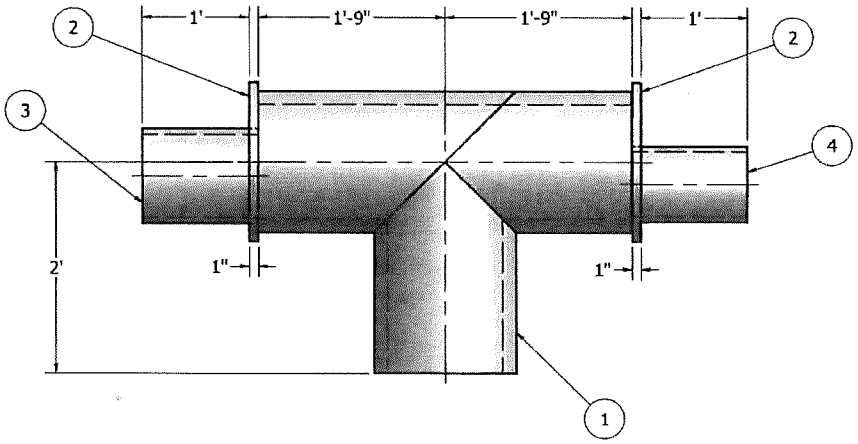

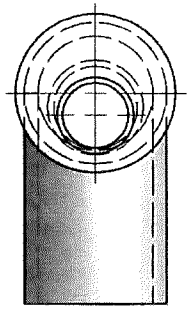

THIS DRAWING IS INTELLECTUAL PROPERTY OF ISCO INDUSTRIES, LLC ("ISCO"). THIS IS INTENDED FOR THE MANUFACTURE, INSTALLATION, AND IDENTIFICATION OF THE PRODUCT DEPICTED AND SHALL NOT BE CIRCULATED OR REPRODUCED WITHOUT PERMISSION FROM AN AUTHORIZED AGENT OF ISCO. A CONTRACT FOR PERFORMANCE IS VALID ONLY UPON SIGNATURE FROM AN AUTHORIZED AGENT OF ISCO AS A COMPANY. THIS DRAWING IS A SPECIALTY MANUFACTURED PRODUCT, AND THEREFORE IS NON-RETURNABLE. ISCO COVENANTS THAT THIS PRODUCT IS FIT FOR A PARTICULAR PURPOSE AND HAS UNLESS WARRANTY OF MERCHANTABILITY. THE USER OF THIS DRAWING ASSUMES AND RELEASES ISCO FROM ANY LIABILITY IN CONNECTION WITH THE PRODUCT.

APPROVED BY: DATE

ISCO INDUSTRIES

DRAWN NLA 7/12/2010

TERRITORY REPRESENTATIVE CARL ERDLE

ORDER #

CUSTOMER NAME: ES&J-JOHNSON COUNTY LF

DRAWING TITLE: 16" x 12" x 6" HDPE TEE

SIZE C | FILE LOCATION DF/SL/ES&J-072110 | REV #/DATE

SCALE | SHEET 1 OF 1

PARTS LIST			
ITEM	QTY	PART NUMBER	DESCRIPTION
1	1	10162699	16" DR 26 HDPE FABRICATED TEE
2	2	29010012	HDPE END PLATE FROM 1" SHEET 18" OD TYP. 2
3	1 ft	10122610	12" DR 26 HDPE PIPE
4	1 ft	10082610	8" DR 26 HDPE PIPE

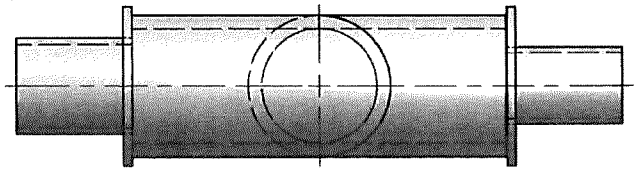

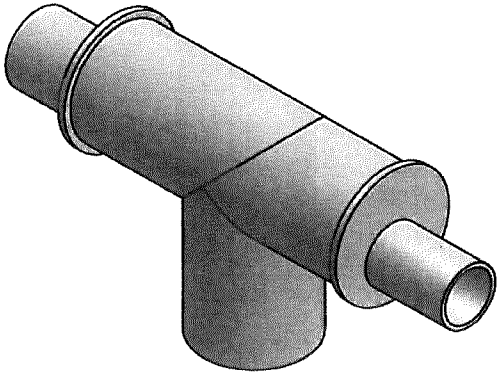

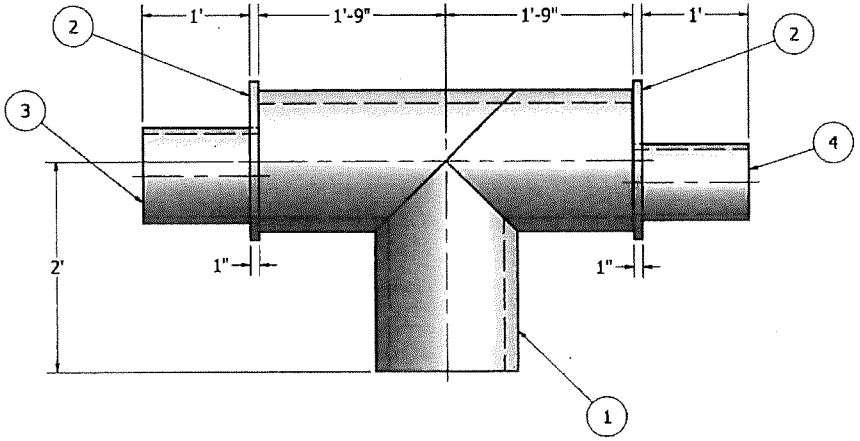

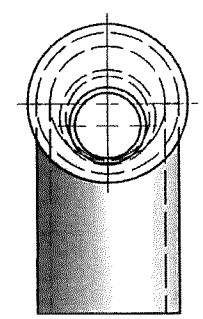

ISCO INDUSTRIES

CUSTOMER NAME: ES&J-JOHNSON COUNTY LF

DRAWING TITLE: 16" x 12" x 8" HDPE TEE

DRAWN: NLA	7/12/2010	SIZE: C	FILE LOCATION: DF/SL/ES&J-072110
TERRITORY REPRESENTATIVE: CARL ERDLE		REV #/DATE	
ORDER #		SCALE	SHEET 1 OF 1

APPROVED BY: DATE

THIS DRAWING IS INTELLECTUAL PROPERTY OF ISCO INDUSTRIES, LLC ("ISCO"). THIS IS INTENDED FOR THE MANUFACTURE, INSTALLATION, AND IDENTIFICATION OF THE PRODUCT DEPICTED AND SHALL NOT BE CIRCULATED OR REPRODUCED WITHOUT PERMISSION FROM AN AUTHORIZED AGENT OF ISCO. A CONTRACT FOR PERFORMANCE IS VALID ONLY UPON SIGNATURE FROM DULY AUTHORIZED AGENT OF YOUR COMPANY. THIS DRAWING IS A SPECIALLY MANUFACTURED PRODUCT; AND THEREFORE IS NON-RETURNABLE. ISCO COVENANTS THAT THIS PRODUCT IS FIT FOR A PARTICULAR PURPOSE AND HAS IMPLIED WARRANTY OF MERCHANTABILITY. THE USER OF THIS DRAWING ASSUMES AND RELEASES ISCO FROM ANY LIABILITY IN CONNECTION WITH THE PRODUCT.

PARTS LIST			
ITEM	QTY	PART NUMBER	DESCRIPTION
1	1	40182699	18" DR 26 HDPE FABRICATED TEE
2	5 sq ft	29010012	HDPE RING FROM 1" SHEET 26" OD
3	4 sq ft	29010012	HDPE END PLATE FROM 1" SHEET 20" OD

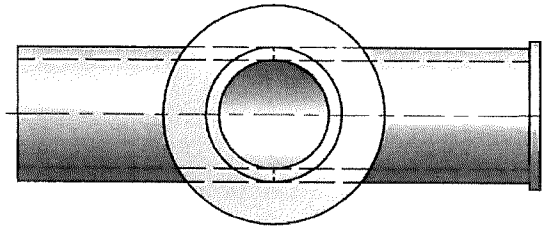

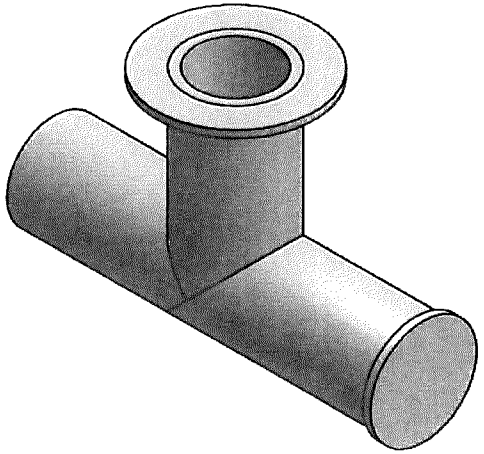

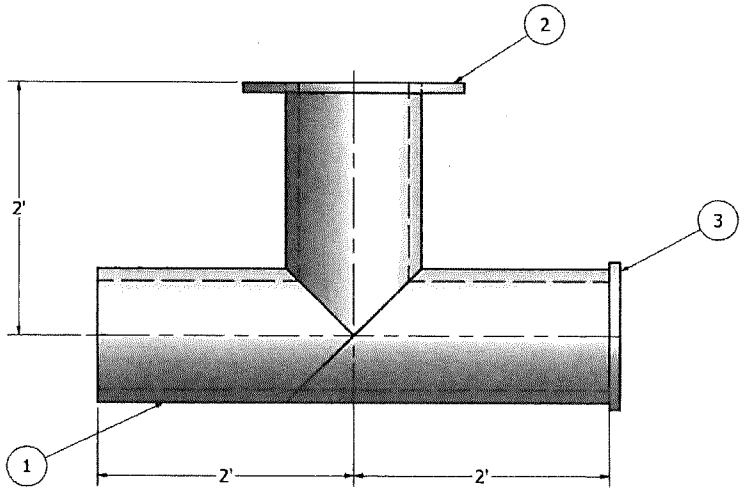

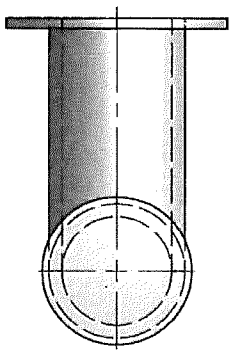

THIS DRAWING IS INTELLECTUAL PROPERTY OF ISCO INDUSTRIES, LLC ("ISCO"). THIS IS INTENDED FOR THE MANUFACTURE, INSTALLATION, AND IDENTIFICATION OF THE PRODUCT DEPICTED AND SHALL NOT BE CIRCULATED OR REPRODUCED WITHOUT PERMISSION FROM AN AUTHORIZED AGENT OF ISCO. A CONTRACT FOR PERFORMANCE IS LIMITED ONLY UPON SIGNATURE FROM DULY AUTHORIZED AGENT OF YOUR COMPANY. THIS DRAWING IS A SPECIALTY MANUFACTURED PRODUCT, AND THEREFORE IS NON-RETURNABLE. ISCO COVENANTS THAT THIS PRODUCT IS FIT FOR A PARTICULAR PURPOSE AND HAS UNLIMITED WARRANTY OF MERCHANTABILITY. THE USER OF THIS DRAWING ASSUMES AND RELEASES ISCO FROM ANY LIABILITY IN CONNECTION WITH THE PRODUCT

ISCO INDUSTRIES		CUSTOMER NAME: ES&J-JOHNSON COUNTY LF	
		DRAWING TITLE: 18" HDPE TEE w/HDPE RING 1	
DRAWN: NLA	7/12/2010	SIZE: C	FILE LOCATION: DF/SL/ES&J-072110
TERRITORY REPRESENTATIVE: CARL ERDLE		SCALE	SHEET 1
ORDER #			

APPROVED BY: DATE

PARTS LIST			
ITEM	QTY	PART NUMBER	DESCRIPTION
1	1	40182699	18" DR 26 HDPE FABRICATED TEE
2	2.5 sq ft	29010012	HDPE RING FROM 1" SHEET 26" OD

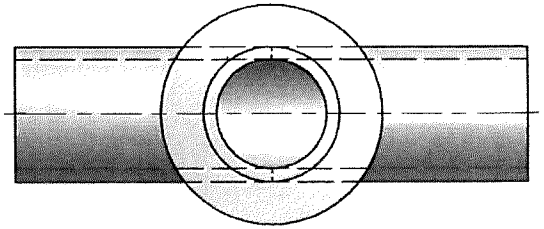

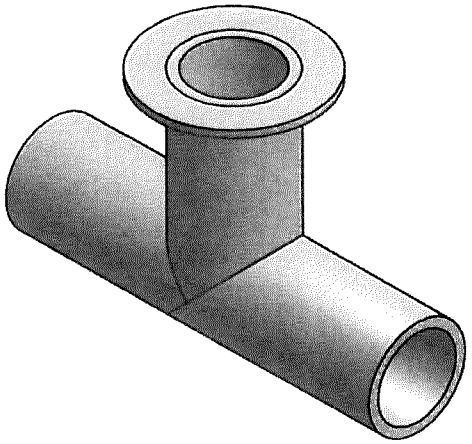

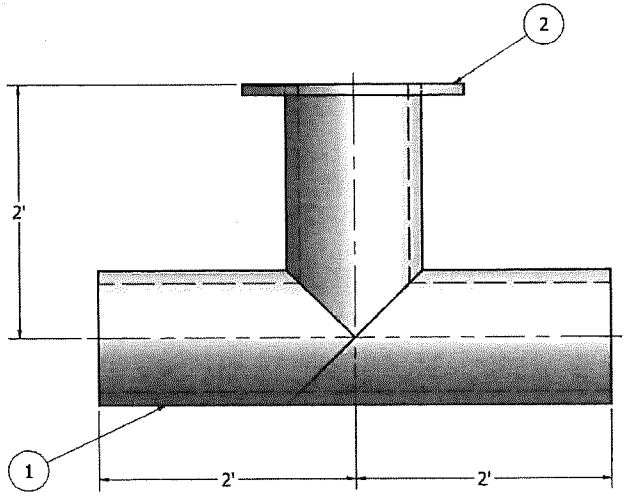

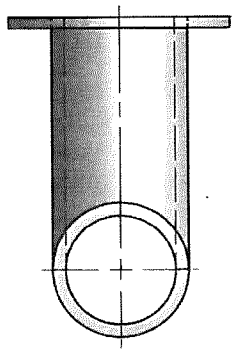

ISCO INDUSTRIES

CUSTOMER NAME: ES&J-JOHNSON COUNTY LF

DRAWING TITLE: 18" HDPE TEE w/HDPE RING 2

DRAWN	DATE
NLA	7/12/2010

TERRITORY REPRESENTATIVE: CARL ERDLE

ORDER #

APPROVED BY: DATE

SIZE	FILE LOCATION	REV #/DATE
C	DF/SL/ES&J-072110	

SCALE

SHEET 1 OF 1

THIS DRAWING IS INTELLECTUAL PROPERTY OF ISCO INDUSTRIES, LLC ("ISCO"). THIS IS INTENDED FOR THE MANUFACTURE, INSTALLATION, AND IDENTIFICATION OF THE PRODUCT DEPICTED AND SHALL NOT BE DISCLOSED, WITHOUT PERMISSION FROM AN AUTHORIZED AGENT OF ISCO, A CONTRACT FOR REMEDIANCE IS HELD ONLY UPON SIGNATURE FROM OUR AUTHORIZED AGENT OF ISCO COMPANY. THIS DRAWING IS A SPECIALTY MANUFACTURED PRODUCT, AND THEREFORE IS NON-RETURNABLE. ISCO CONFIRMS THAT THIS PRODUCT IS FIT FOR A PARTICULAR PURPOSE AND HAS APPLIED WARRANTY OF MERCHANTABILITY. THE USER OF THIS DRAWING ASSUMES AND RELEASES ISCO FROM ANY LIABILITY IN CONNECTION WITH THE PRODUCT

PARTS LIST			
ITEM	QTY	PART NUMBER	DESCRIPTION
1	21 sq ft	29010012	HDPE BASE PLATE FROM 1" SHEET 4'-6" SQ.
2	3.5 ft	10483211	48" DR 32.5 HDPE PIPE
3	2 ft	10142610	14" DR 26 HDPE DROP INLET
4	2	53089999	8" HDPE TO ADS CORRUGATED TRANSITTION
5	1	29010012	HDPE FIXED LID FROM 1" SHEET 50" OD
6	1	29010012	HDPE HINGED LID FROM 1" SHEET 50" OD
7	1	53999999	S.S. PIANO HINGE
8	1	29010012	HDPE LOCKING TAB

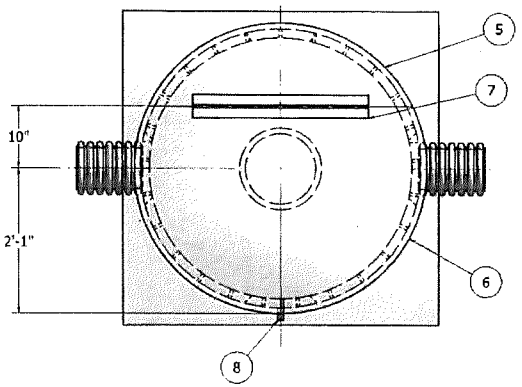

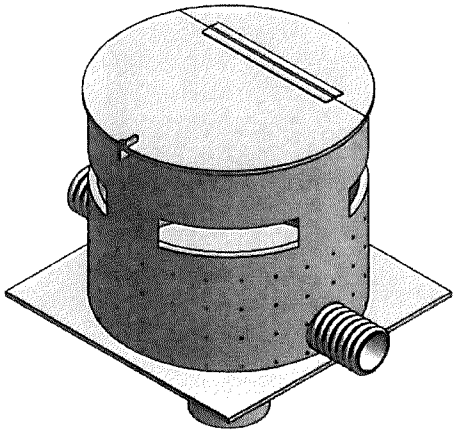

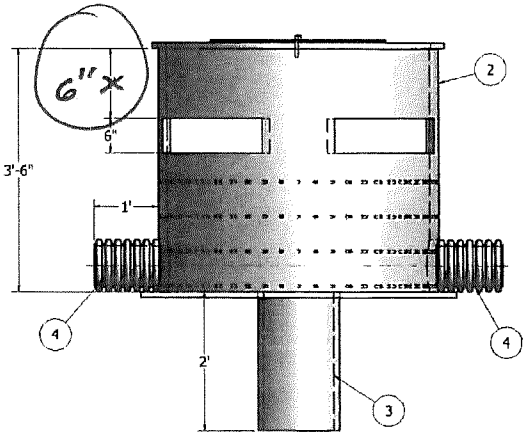

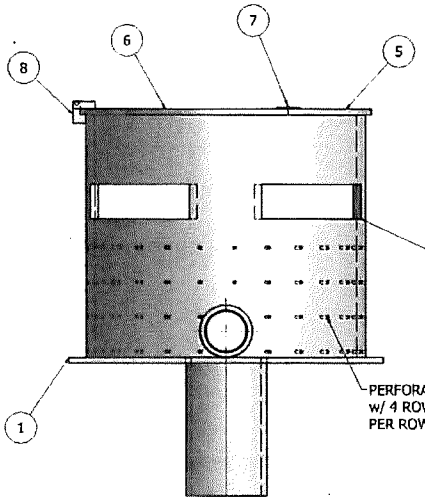

CUT (4) 6" x 24" OPENINGS INTO 48" HDPE PIPE. CENTER OF CUT ROTATED 45° FROM CENTERLINE

PERFORATE BOTTOM 2' OF 48" PIPE w/ 4 ROWS OF 1/2" DIA. HOLES, 25 HOLES PER ROW EQUALLY SPACED, 6" C-C

THIS DRAWING IS INTELLECTUAL PROPERTY OF ISCO INDUSTRIES, LLC (ISCO). IT IS INTENDED FOR THE MANUFACTURE, INSTALLATION, AND CONSTRUCTION OF THE PRODUCT DEPICTED AND SHALL NOT BE LENDED, USED OR REPRODUCED WITHOUT PERMISSION FROM AN AUTHORIZED AGENT OF ISCO. A CONTRACT FOR PERFORMANCE IS HEREBY MADE UPON ACCEPTANCE FROM ISCO OR AUTHORIZED AGENT OF ISCO COMPANY. THE ORDERING OF A SPECIALTY MANUFACTURED PRODUCT, AND THEREFORE IS NON-RETURNABLE. ISCO COVENANTS THAT THIS PRODUCT IS FIT FOR A PARTICULAR PURPOSE AND HAS IMPLIED WARRANTY OF MERCHANTABILITY. THE USER OF THIS DRAWING ASSUMES AND RELEASES ISCO FROM ANY LIABILITY IN CONNECTION WITH THE PRODUCT.

ISCO INDUSTRIES		CUSTOMER NAME: ES&J-JOHNSTON COUNTY LF	
		DRAWING TITLE: 48" HDPE DP 11 DROP INLET	
DRAWN: NLA	7/21/2010	SIZE: D	FILE LOCATION: DF/SL/ES&J-072110
APPROVED BY:	DATE	TERRITORY REPRESENTATIVE: CARL ERDLE	REV #/ DATE
		ORDER #:	SCALE: SHEET 1 OF 1

PARTS LIST			
ITEM	QTY	PART NUMBER	DESCRIPTION
1	21 sq ft	29010012	HDPE BASE PLATE FROM 1" SHEET 4'-6" SQ.
2	3.5 ft	10483211	48" DR 32.5 HDPE PIPE
3	2 ft	10162610	16" DR 26 HDPE DROP INLET
4	2	53089999	8" HDPE TO ADS CORRUGATED TRANSITION
5	1	29010012	HDPE FIXED LID FROM 1" SHEET 50" OD
6	1	29010012	HDPE HINGED LID FROM 1" SHEET 50" OD
7	1	53999999	S.S. PIANO HINGE
8	1	29010012	HDPE LOCKING TAB

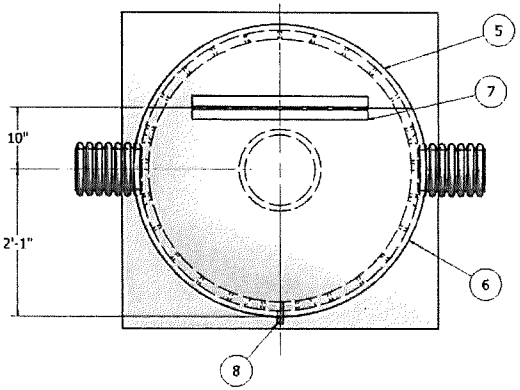

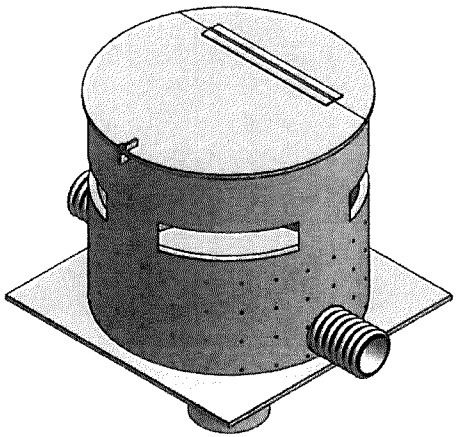

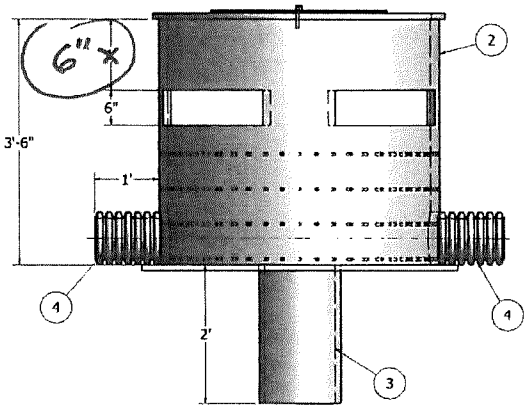

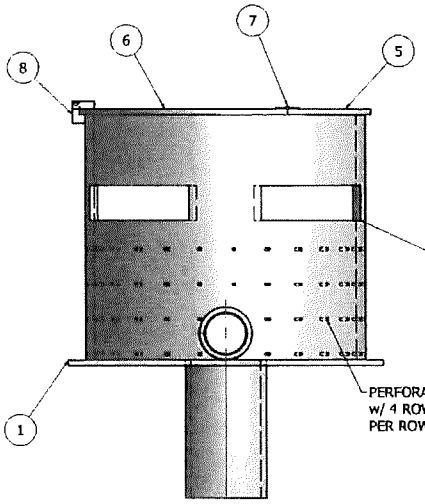

CUT (4) 6" x 24" OPENINGS INTO 48" HDPE PIPE. CENTER OF CUT ROTATED 45° FROM CENTERLINE

PERFORATE BOTTOM 2' OF 48" PIPE w/ 4 ROWS OF 1/2" DIA. HOLES, 25 HOLES PER ROW EQUALLY SPACED, 6" C-C

ISCO INDUSTRIES

CUSTOMER NAME: ES&J-JOHNSTON COUNTY LF

DRAWING TITLE: 48" HDPE DP 12 DROP INLET

DRAWN: NLA 7/21/2010

TERRITORY REPRESENTATIVE: CARL BRIDLE

ORDER #:

APPROVED BY: DATE

SIZE: D FILE LOCATION: DF/SL/ES&J-072110 REV #/ DATE

SCALE: SHEET 1 OF 1

THIS DRAWING IS THE PROPERTY OF ISCO INDUSTRIES, LLC. IT IS LOANED FOR THE MANUFACTURE, INSTALLATION AND OPERATION OF THE PRODUCT DETAILED AND SHALL NOT BE COPIED OR REPRODUCED WITHOUT PERMISSION FROM AN AUTHORIZED AGENT OF ISCO. A CONTRACT FOR PERFORMANCE AND/OR SALE OF THE PRODUCT DETAILED HEREIN IS NON-EXISTENT. ISCO DISCLAIMS ANY AND ALL LIABILITY FOR ANY PERSONAL INJURY OR PROPERTY DAMAGE RESULTING FROM THE USE OF THIS PRODUCT IN ANY APPLICATION OTHER THAN THE SPECIFIC APPLICATION FOR WHICH IT WAS EXPRESSLY MANUFACTURED. ISCO MAKES NO WARRANTY OF MERCHANTABILITY OR FITNESS FOR A PARTICULAR PURPOSE AND HAS EXPRESSLY DISCLAIMED ANY IMPLIED WARRANTY. THE USER OF THIS PRODUCT ASSUMES ALL RISK AND LIABILITY WHATSOEVER IN CONNECTION WITH THE PRODUCT.

N-12® ST IB PIPE (PER AASHTO)

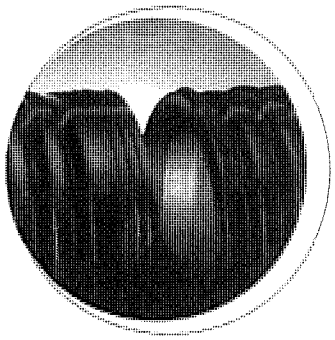

N-12 corrugated dual-wall pipe was introduced in 1987. Today's N-12 pipe offers significant performance advantages, plus the best soil-tight joint in the industry. Available in diameters from 4" to 60" (100 to 1500 mm), N-12 pipe is replacing reinforced concrete pipe as a preferred product for storm water applications.

ADS N-12 pipe contains a superior built-in bell-and-spigot joint. The joints are sealed by high-quality, factory-installed rubber gaskets that meet all the requirements of ASTM F477. A polyethylene bell minimizes joint distortion. The chipping and cracking that is common to concrete bells, is eliminated.

APPLICATIONS:

Storm Sewers
Retention/Detention
Golf, Turf & Recreation
Culverts/Cross Drains
Grain Aeration
Waterways
Ditch Enclosures
Slope/Edge Drains
Mining/Forestry/Industrial
Foundation Drains
Downspouts/Roof Drainage
Land Reclamation
Terracing

FEATURES:

- 4"– 60" (100 to 1500 mm) diameters available
- 6 m (19 ft, 8 in) or 4 m (13 ft) lengths available
- Bell-and-spigot joint design
- In-line bell design
- Exceptional joint strength
- Excellent abrasion and corrosion resistance
- Light weight
- Fast installation times
- Structural strength that will support H-25 live loads with 1' (0.3 m) minimum cover 54" and 60" (1350 and 1500 mm) pipe requires 2' (0.6 m) cover for H-25 loads

BENEFITS:

- Variety of diameters and lengths that will fit in any project
- Joint only requires lube for fitting – ends are pushed together for easy field installation
- Unlike pipes from other manufacturers, there are no additional gasket materials, grout or sealing bands to transport and apply
- Installation cost savings from lower shipping costs, fewer people, and less heavy equipment required
- Hydraulic efficiency from smooth interior
- Long-term durability of HDPE

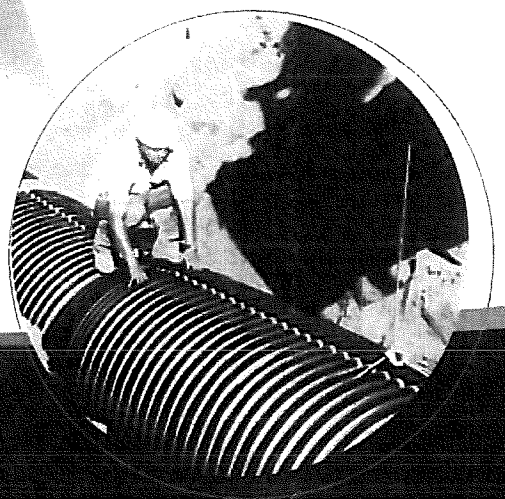

ADS Service: **ADS representatives are committed to providing you with the answers to all your questions, including specifications, and installation and more.**

The Most Advanced Name in Drainage Systems

ADS N-12® ST IB PIPE (PER AASHTO) SPECIFICATION

SCOPE

This specification describes 4- through 60-inch (100 to 1500 mm) ADS N-12 ST IB pipe (per AASHTO) for use in gravity-flow drainage applications.

PIPE REQUIREMENTS

ADS N-12 ST IB pipe (per AASHTO) shall have a smooth interior and annular exterior corrugations.

- 4- through 10-inch (100 to 250 mm) shall meet AASHTO M252, Type S.
- 12- through 60-inch (300 to 1500 mm) shall meet AASHTO M294, Type S or ASTM F2306.
- Manning's "n" value for use in design shall be 0.012.

JOINT PERFORMANCE

Pipe shall be joined using a bell & spigot joint meeting AASHTO M252, AASHTO M294, or ASTM F2306. The joint shall be soil-tight and gaskets, when applicable, shall meet the requirements of ASTM F477. Gaskets shall be installed by the pipe manufacturer and covered with a removable wrap to ensure the gasket is free from debris. A joint lubricant supplied by the manufacturer shall be used on the gasket and bell during assembly.

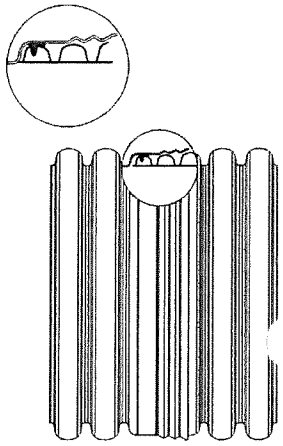

FITTINGS

Fittings shall conform to AASHTO M252, AASHTO M294 or ASTM F2306. Bell and spigot connections shall utilize a spun-on or welded bell and valley or saddle gasket meeting the soil-tight joint performance requirements of AASHTO M252, AASHTO M294 or ASTM F2306.

MATERIAL PROPERTIES

Virgin material for pipe and fitting production shall be high density polyethylene conforming with the minimum requirements of cell classification 424420C for 4- through 10-inch (100 to 250 mm) diameters, or 435400C for 12- through 60-inch (300 to 1500 mm) diameters, as defined and described in the latest version of ASTM D3350, except that carbon black content should not exceed 4%. The 12- through 60-inch (300 to 1500 mm) virgin pipe material shall comply with the notched constant ligament-stress (NCLS) test as specified in Section 9.5 and 5.1 of AASHTO M294 and ASTM F2306 respectfully.

INSTALLATION

Installation shall be in accordance with ASTM D2321 and ADS's published installation guidelines, with the exception that minimum cover in trafficked areas for 4 - through 48-inch (100 to 1200 mm) diameters shall be one foot (0.3 m), and for 54- and 60-inch (1350 and 1500 mm) diameters, shall be 2 ft (0.6 m) in single run applications. Backfill for minimum cover situations shall consist of Class 1, Class 2 (minimum 90% SPD) or Class 3 (minimum 90% SPD) material. Maximum fill heights depend on embedment material and compaction level; please refer to Technical Note 2.01. Contact your local ADS representative or visit our website at www.ads-pipe.com for a copy of the latest installation guidelines.

PIPE DIMENSIONS

	Nominal Diameter, in (mm)													
Pipe I.D., in (mm)	4 (100)	6 (150)	8 (200)	10 (250)	12 (300)	15 (375)	18 (450)	24 (600)	30 (750)	36 (900)	42 (1050)	48 (1200)	54 (1350)	60 (1500)
Pipe O.D.** in (mm)	4.8 (122)	6.9 (175)	9.1 (231)	11.4 (290)	14.5 (368)	18 (457)	21 (559)	28 (711)	36 (914)	42 (1067)	48 (1219)	54 (1372)	61 (1549)	57 (1702)
Perforations	All diameters available with or without perforations.													

* Check with sales representative for availability by region.

**Pipe O.D. values are provided for reference purposes only, values stated for 12- through 60-inch are ± 1 inch. Contact a sales representative for exact values.

For more information on ADS N-12 ST IB pipe (per AASHTO) and other ADS products, please contact our Customer Service Representatives at 1-800-821-6710.

ADS "Terms and Conditions of Sale" are available on the ADS website, www.ads-pipe.com.
The ADS logo, the Green Stripe, and N-12® are registered trademarks of Advanced Drainage Systems, Inc. © 2008 Advanced Drainage Systems, Inc.
BRO 10581 0908 (08459)

Advanced Drainage Systems, Inc.
4640 Trueman Blvd., Hilliard, OH 43026
1-800-821-6710 www.ads-pipe.com

Model 1260A

- **Sizes 2" through 12"**
- **Pressure settings 0.5 oz/in² to 15 psig**
- **Available in aluminum (type 356), carbon steel, stainless steel, fiberglass, and other materials**
- **Modular construction**

PRESSURE RELIEF VALVE

Pressure Relief Valve Model 1260A is for use where pressure relief is required and all relieving vapors must be piped away. Tank relief, to avoid tank damage, is controlled by a spring or weight loaded pallet in the valve housing. Pressure relief valves help provide increased fire protection and safety. The Model 1260A can also be used for in-line vacuum relief where flanged inlet connection is required. Back pressure in the system must be considered when using flow curves.

SPECIAL FEATURES

Model 1260A offers Groth's special "cushioned air" seating. Superior performing Teflon®[1] seating diaphragms are standard to minimize sticking caused by resinous vapors and atmospheric moisture. The Model 1260A has a self-draining housing body and drip rings to protect seating surfaces from condensate and freezing. This design also avoids pressure or vacuum buildup due to binding or clogging of the valve. Buna-N, Viton®[2], and other seating diaphragms can be provided when required.

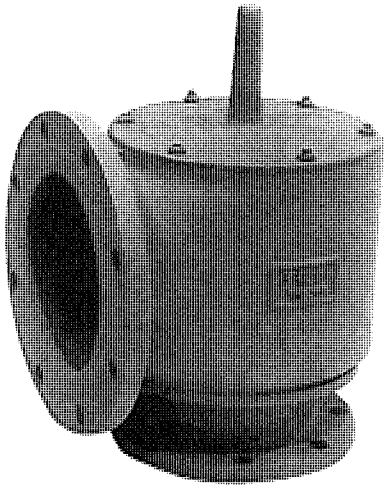

MODEL 1260A

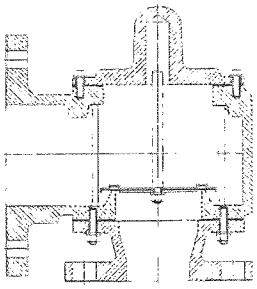

MODEL 1260A

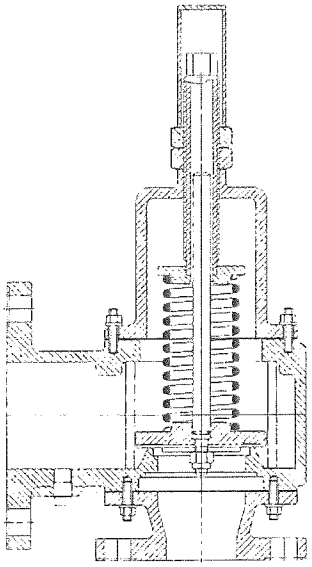

MODEL 1261A

1 Teflon® is a registered trademark of E. I. du Pont de Nemours and Company used under license.
2. Viton® is a registered trademark of DuPont Performance Elastomers.

GROTH CORPORATION
a Continental Disc company

SPECIFICATIONS

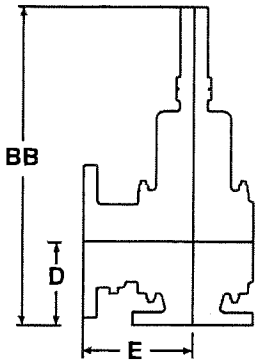

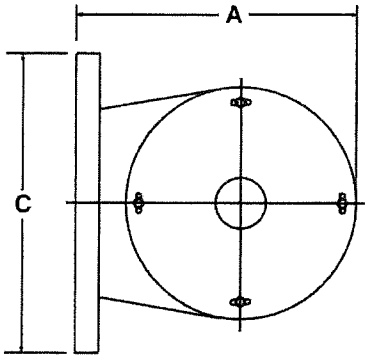

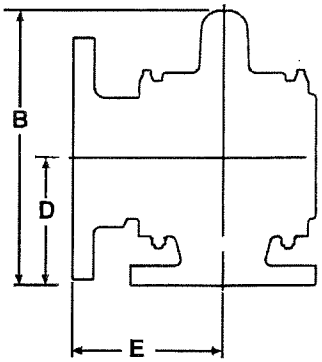

Specifications subject to change without notice. Certified dimensions available upon request.

Inlet Flg.[1] (Metric)	Outlet Flg.[1] (Metric)	Max. Set Pressure Weight Loaded	Max. Set Pressure Spring Loaded	Min. Setting Weight Loaded	A Length (Metric)	B Height (Metric)	C Width (Metric)	D (Metric)	E (Metric)	BB (Metric)	Approximate Shipping Weight Lbs. (Aluminum)
2" (50 mm)	3" (80 mm)	11 oz/in² (48.3 gm/cm2)	15 psig SPRING LOADED PRESSURE (1.05 kg/cm²)	*0.5 oz/in² WEIGHT LOADED (2.20 gm/cm²)	8-5/8" (219 mm)	9-3/8" (238 mm)	7-1/2" (191 mm)	4-1/8" (105 mm)	5-1/2" (140 mm)	16-5/8" (422 mm)	16 (7 kg)
3" (80 mm)	4" (100 mm)	13 oz/in² (57.1 gm/cm2)			10" (254 mm)	11-1/8" (282 mm)	9" (229 mm)	5" (127 mm)	6" (152 mm)	20-1/4" (514 mm)	22 (10 kg)
4" (100 mm)	6" (150 mm)	16 oz/in² (70.3 gm/cm2)			11" (279 mm)	13-7/8" (352 mm)	11" (279 mm)	6-1/2" (165 mm)	6-1/2" (165 mm)	25-5/8" (651 mm)	29 (13 kg)
6" (150 mm)	8" (200 mm)	16 oz/in² (70.3 gm/cm2)			14-1/2" (368 mm)	17-3/8" (441 mm)	13-1/2" (343 mm)	8-1/2" (216 mm)	8-1/2" (216 mm)	34-1/2" (876 mm)	55 (25 kg)
8" (200 mm)	10" (250 mm)	16 oz/in² (70.3 gm/cm2)			18" (457 mm)	21-1/4" (539 mm)	16" (406 mm)	9-3/4" (248 mm)	10-3/4" (273 mm)	39-3/4" (1010 mm)	92 (42 kg)
10" (250 mm)	12" (300 mm)	16 oz/in² (70.3 gm/cm2)			20-3/4" (527 mm)	23-5/8" (600 mm)	19" (483 mm)	10-1/4" (260 mm)	12-1/2" (318 mm)	46-3/8" (1178 mm)	105 (48 kg)
12" (300 mm)	14" (350 mm)	16 oz/in² (70.3 gm/cm²)			24-3/4" (629 mm)	26-5/8" (676 mm)	21" (533 mm)	11" (279 mm)	15" (381 mm)	49-1/4" (1251 mm)	149 (68 kg)

[1] On spring loaded valves, change model number. [2] 150# R.F. drilling compatibility F.F. on aluminum and R.F. on carbon steel and stainless steel alloys. Fiberglass dimensions on request. 16 oz/in² set with spacer. SS set weights-consult factory. *Some sizes require non-ferrous components to achieve 0.5 oz/in² setting.

HOW TO ORDER

For easy ordering, select proper model numbers

MODEL # □□□□□ --- SIZE □□ --- MATERIAL □□□ --- OPTIONS □□□

1260A Weight Loaded
1261A Pressure Spring

SIZE
02" Thru 12"

MATERIAL
Pallet Material
Seat Material
* Body Material
1 = Aluminum
3 = Carbon Steel
5 = 316 SS
6 = Vinyl Ester Resin
7 = Furan
Z = Special

OPTIONS
0 = No Options
Z = Special Options
0 = No Jacket
J = Steam Jacket
S = Spacer
H = Steam Jacket and Spacer
Diaphragm Material (Seat):
B = Buna-N
T = Teflon®[1]
V = Viton®[2]
Z = Special

NOTES
- Include model number and setting when ordering.
- For special options, consult factory.
- When ordering steam jacket, include steam pressure/temperature.
- * Stainless steel guides and stems are standard with aluminum and carbon steel bodies. Stainless steel seats standard with carbon steel bodies.

EXAMPLE

[1][2][6][0][A]—[0][2]—[1][1][5]—[T][0][0]

Indicates a 2" Model 1260A with Aluminum Body and Seat, 316 SS Pallet, Teflon®[1] Seat Diaphragm, and no other options.

1. Teflon® is a registered trademark of E. I. du Pont de Nemours and Company used under license
2. Viton® is a registered trademark of DuPont Performance Elastomers

Model 1260A
Pressure Relief Capacity

Set Pressure (P_s)		Air Flow Capacity at 100% Overpressure (Double Set Pressure) 1000 Standard Cubic Feet per Hour at 60° F						
In WC	oz/in²	2"	3"	4"	6"	8"	10"	12"
0.87	0.50	6.87	13.3	25.2	52.7	82.6	135	175
1.00	0.58	7.39	14.3	27.1	56.6	88.8	145	188
1.73	1.00	9.71	18.8	35.6	74.3	117	190	247
2.00	1.16	10.4	20.2	38.2	79.8	125	205	265
2.60	1.50	11.9	23.0	43.5	90.8	143	233	302
3.00	1.73	12.8	24.7	46.8	97.5	153	250	324
3.46	2.00	13.7	26.6	50.2	105	164	268	348
4.00	2.31	14.7	28.6	53.9	112	177	288	374
6.00	3.47	18.0	35.0	65.9	137	215	351	456
8.00	4.62	20.7	40.4	75.8	157	248	404	525
10.0	5.78	23.1	45.1	84.6	175	276	450	584
12.0	6.93	25.2	49.4	92.4	191	301	491	638
15.0	8.66	28.1	55.2	103	211	335	546	709
20.0	11.6	32.2	63.7	118	241	383	625	811
25.0	14.4	35.8	71.2	131	267	424	692	898
30.0	17.3	39.0	77.9	143	289	460	751	975

Flow capacity is certified by Groth Corporation, based on actual tests conducted in compliance with API Std. 2000. Flow measurement accuracy has been verified by an independent testing laboratory.

Flow capacity values listed above are based on full open valves at 100% overpressure.

For an equivalent size fiberglass valve, reduce tabulated capacities by 32%.

Read the flow capacity at 100% overpressure directly from the table above. Use linear interpolation if the set pressure is not listed. (Ref: page 173)

If the allowable overpressure is less than 100%, modify the flow capacity using the appropriate "C" factor from the table. If allowable overpressure is more than 100%, consult page 173 or your Groth Representative.

Calculate the percentage overpressure by the following formula. Note that all pressures are gauge pressure expressed in the same units of measure.

P_f = Flowing pressure
P_s = Set pressure
% OP = $[(P_f - P_s)/P_s] \times 100$

Calculate flow capacity at less than 100% overpressure according to the following example.

Example—Flow Capacity Calculation

6" Model 1260A
4 In WC set pressure [P_s]
7 In WC flowing pressure [P_f]

1. Read flow capacity at set pressure from table
2. Calculate overpressure
3. Read "C" factor from table
4. Calculate flow capacity

Example—To find "C" factor from table:
Read "C" factor for **75%** overpressure at intersection of row **70** and column **5**
"C" factor at 75% OP = **0.87**

"C" Factor Table										
%OP	0	1	2	3	4	5	6	7	8	9
10	0.42	0.43	0.44	0.45	0.46	0.46	0.47	0.48	0.49	0.50
20	0.51	0.52	0.52	0.53	0.54	0.55	0.56	0.56	0.57	0.58
30	0.59	0.59	0.60	0.61	0.61	0.62	0.63	0.64	0.64	0.65
40	0.66	0.66	0.67	0.68	0.68	0.69	0.70	0.70	0.71	0.72
50	0.72	0.73	0.73	0.74	0.75	0.75	0.76	0.77	0.77	0.78
60	0.78	0.79	0.80	0.80	0.81	0.81	0.82	0.82	0.83	0.84
70	0.84	0.85	0.85	0.86	0.86	0.87	0.88	0.88	0.89	0.89
80	0.90	0.90	0.91	0.91	0.92	0.92	0.93	0.93	0.94	0.94
90	0.95	0.95	0.96	0.96	0.97	0.97	0.98	0.99	0.99	1.00

Flow = 112,000 SCFH
% OP = [(7 - 4)/4] x 100 = 75%
"C" = 0.87
Flow = 0.87 x 112,000 = 97,440 SCFH

Geotechnics
INTEGRITY IN TESTING

WASH SIEVE ANALYSIS OF AGGREGATES
ASTM C117-04 / C136-06

Client	RSG & ASSOCIATES	Boring No.	11-17-10
Client Reference	JOHNSTON CO. C&D AREA 1 CLOSURE	Depth(ft.)	NA
Project No.	2010-725-05	Sample No.	COARSE AGG
Lab ID	2010-725-05-01		
		Color	**GRAY & PINK**

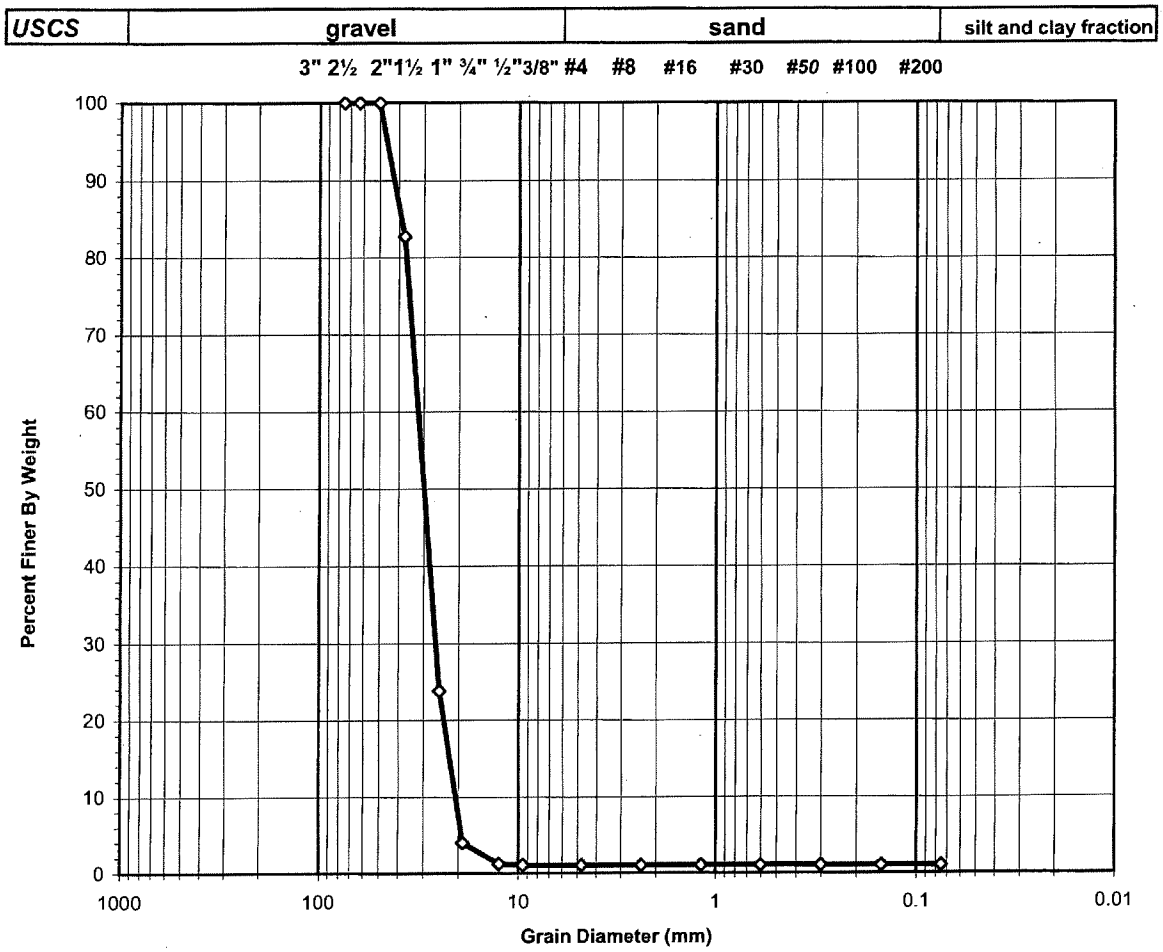

USCS Symbol: ***gp, ASSUMED***

Fineness Modulus: ***8.06***

D60 = 32.07

D30 = 26.09 CC = 1.03

D10 = 20.65 CU = 1.55

USCS Classification: ***POORLY GRADED GRAVEL***

Tested By MPS Date 11/23/2010 Checked By MPS Date 11-23-10

DCN: CT-S42A DATE 08/26/09 REVISED Data Drive\2010 PROJECTS\2010-725 RSG JOHNSTON\[2010-725-05-01 SIEVE.xls]Sheet1

2200 Westinghouse Boulevard • Suite 103 • Raleigh, NC 27604 • Phone (919) 876-0405 • Fax (919) 876-0460 • www.geotechnics.net

Geotechnics
INTEGRITY IN TESTING

WASH SIEVE ANALYSIS OF AGGREGATES

ASTM C117-04 / C136-06

Client	RSG & ASSOCIATES	Boring No.	11-17-10
Client Reference	JOHNSTON CO. C&D AREA 1 CLOSURE	Depth(ft.)	NA
Project No.	2010-725-05	Sample No.	COARSE AGG
Lab ID	2010-725-05-01		
		Color	**GRAY & PINK**

Tare No.	B-39	Wt. of Dry Specimen (gm)	14991.80
Wt. Tare + DS.(Pre-Wash)	15542.30	Wt. of +#200 Specimen(gm)	14837.00
Wt.Tare + Dry,Washed specimen	15488.40	Wt. of -#200 Specimen(gm)	115.70
Wt Tare	550.50		
Wt. Dry,Washed specimen	14937.90		
		Total Wt. Retained After Sieving	14898.80

% Difference Wt. Dry,Washed specimen vs Total Wt. Retained After Sieving 0.3

Note: % Difference must not be more than 0.3

Sieve	Sieve Opening (mm)	Weight Retained (gm.)	Percent Retained	Accumulated Percent Retained	**Percent Finer**
3"	75	0.00	0	0	100
2 1/2"	63	0.00	0	0	100
2"	50	0.00	0	0	100
1 1/2"	37.50	2590.60	17	17	83
1"	25.00	8830.80	59	76	24
3/4"	19.00	2974.20	20	96	4
1/2"	12.50	411.10	3	99	1
3/8"	9.50	22.10	0	99	1
#4	4.75	8.20	0	99	1
#8	2.36	0.00	0	99	1
#16	1.18	0.00	0	99	1
#30	0.60	0.00	0	99	1
#50	0.30	0.00	0	99	1
#100	0.15	0.00	0	99	1
#200	0.075	0.00	0.0	99.0	1.0
Pan	-	61.80	0	99	-

Tested By MPS Date 11/23/2010 Checked By MPS Date 11-23-10

DCN: CT-S42A DATE 08/26/09 REVISION Data Drive\2010 PROJECTS\2010-725 RSG JOHNSTON\2010-725-05-01 SIEVE.xls]Sheet1

2200 Westinghouse Boulevard • Suite 103 • Raleigh, NC 27604 • Phone (919) 876-0405 • Fax (919) 876-0460 • www.geotechnics.net

Geotechnics
INTEGRITY IN TESTING

ATTERBERG LIMITS

ASTM D 4318-05 / AASHTO T89 (SOP - S4A)

Client	R.S.G. & ASSOCIATES	Boring No.	NA
Client Reference	JOHNSTON CO. C&D LF AREA 1 CLOSURE	Depth (ft)	NA
Project No.	2010-725-01	Sample No.	1
Lab ID	2010-725-01-01	Soil Description	**ORANGE LEAN CLAY**
			(Minus No. 40 sieve material, Airdried)

Note: The USCS symbol used with this test refers only to the minus No. 40 sieve material. See the "Sieve and Hydrometer Analysis" graph page for the complete material description.

Liquid Limit Test	**1**	**2**	**3**
Tare Number	B	I	T
Wt. of Tare & WS (gm)	27.73	30.45	28.91
Wt. of Tare & DS (gm)	23.58	25.61	24.72
Wt. of Tare (gm)	15.16	15.19	15.17
Wt. of Water (gm)	4.2	4.8	4.2
Wt. of DS (gm)	8.4	10.4	9.6
Moisture Content (%)	**49.3**	**46.4**	**43.9**
Number of Blows	**15**	**25**	**35**

MULTIPOINT

Plastic Limit Test	**1**	**2**	**Range**
Tare Number	J	G	
Wt. of Tare & WS (gm)	21.60	22.58	
Wt. of Tare & DS (gm)	20.43	21.23	
Wt. of Tare (gm)	15.10	15.00	
Wt. of Water (gm)	1.2	1.4	
Wt. of DS (gm)	5.3	6.2	
Moisture Content (%)	**22.0**	**21.7**	**0.3**

Note: The acceptable range of the two Moisture contents is ± 2.6

Test Results	
Liquid Limit (%)	**46**
Plastic Limit (%)	**22**
Plasticity Index (%)	**24**
USCS Symbol	**CL**

Flow Curve

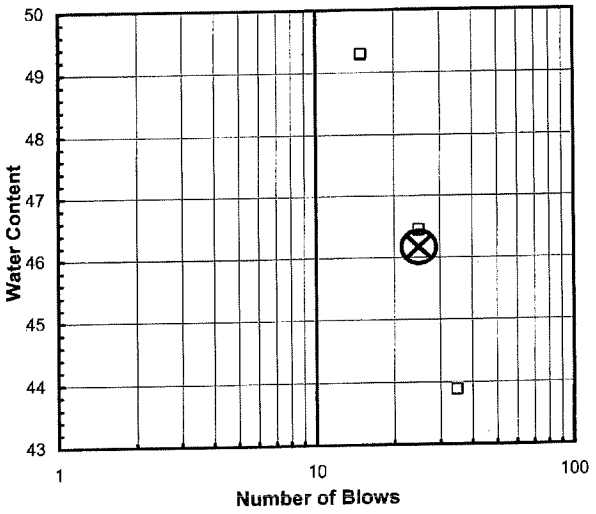

Plasticity Chart

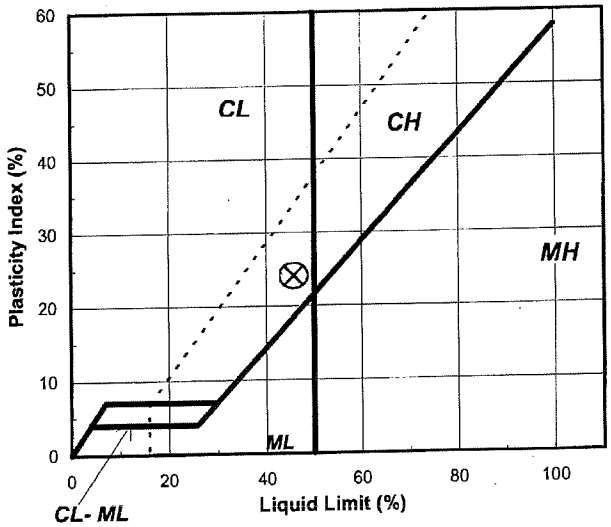

Tested By JBD *Date* 9/14/2010 *Checked By* GEM *Date* 9-15-10

2200 Westinghouse Boulevard • Suite 103 • Raleigh, NC 27604 • Phone (919) 876-0405 • Fax (919) 876-0460 • www.geotechnics.net

geotechnics
INTEGRITY IN TESTING

ATTERBERG LIMITS

ASTM D 4318-05 / AASHTO T89 (SOP - S4A)

Client	R.S.G. & ASSOCIATES	Boring No.	NA
Client Reference	JOHNSTON CO. C&D LF AREA 1 CLOSURE	Depth (ft)	NA
Project No.	2010-725-01	Sample No.	2
Lab ID	2010-725-01-02	Soil Description	**LIGHT ORANGE LEAN CLAY**

Note: The* USCS *symbol used with this test refers only to the minus No. 40 sieve material. See the "Sieve and Hydrometer Analysis" graph page for the complete material description.

(Minus No. 40 sieve material, Airdried)

Liquid Limit Test	**1**	**2**	**3**	
				M
Tare Number	B-B	A-H	Y	U
Wt. of Tare & WS (gm)	26.36	24.30	25.95	L
Wt. of Tare & DS (gm)	23.56	22.13	23.42	T
Wt. of Tare (gm)	15.50	15.52	15.56	I
Wt. of Water (gm)	2.8	2.2	2.5	P
Wt. of DS (gm)	8.1	6.6	7.9	O
				I
Moisture Content (%)	**34.7**	**32.8**	**32.2**	N
Number of Blows	**15**	**25**	**35**	T

Plastic Limit Test	**1**	**2**	**Range**
Tare Number	A-I	D-1	
Wt. of Tare & WS (gm)	22.68	21.70	
Wt. of Tare & DS (gm)	21.68	20.83	
Wt. of Tare (gm)	15.42	15.22	
Wt. of Water (gm)	1.0	0.9	
Wt. of DS (gm)	6.3	5.6	
Moisture Content (%)	**16.0**	**15.5**	**0.5**

Note: The acceptable range of the two Moisture contents is ± 2.6

Test Results	
Liquid Limit (%)	**33**
Plastic Limit (%)	**16**
Plasticity Index (%)	**17**
USCS Symbol	**CL**

Flow Curve

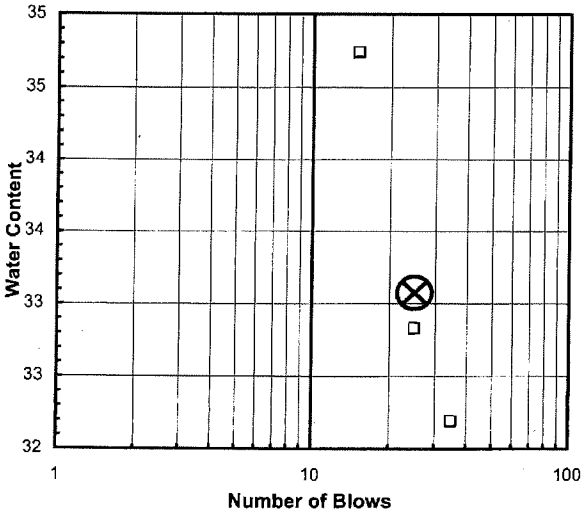

Plasticity Chart

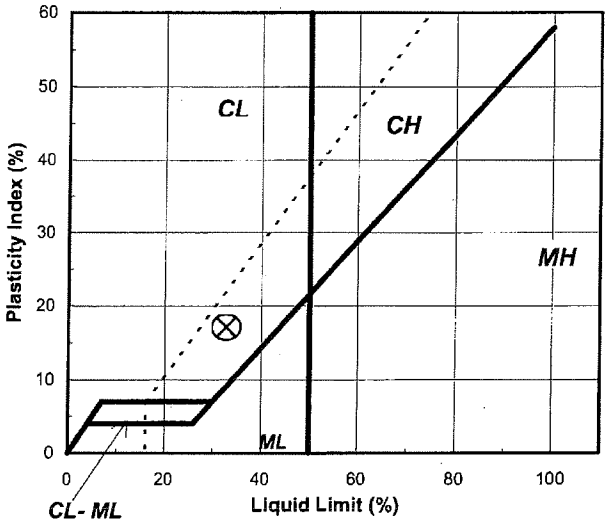

Tested By SD *Date* 9/14/2010 *Checked By* GEM *Date* 9-16-10

2200 Westinghouse Boulevard • Suite 103 • Raleigh, NC 27604 • Phone (919) 876-0405 • Fax (919) 876-0460 • www.geotechnics.net

geotechnics
INTEGRITY IN TESTING

SIEVE ANALYSIS
ASTM D 422-63 (SOP-S3)

Client	R.S.G. & ASSOCIATES	Boring No.	NA
Client Reference	JOHNSTON CO. C&D LF AREA 1 CLOSURE	Depth (ft)	NA
Project No.	2010-725-01	Sample No.	1
Lab ID	2010-725-01-01	Soil Color	**ORANGE**

USCS	SIEVE ANALYSIS		HYDROMETER
	gravel	sand	silt and clay

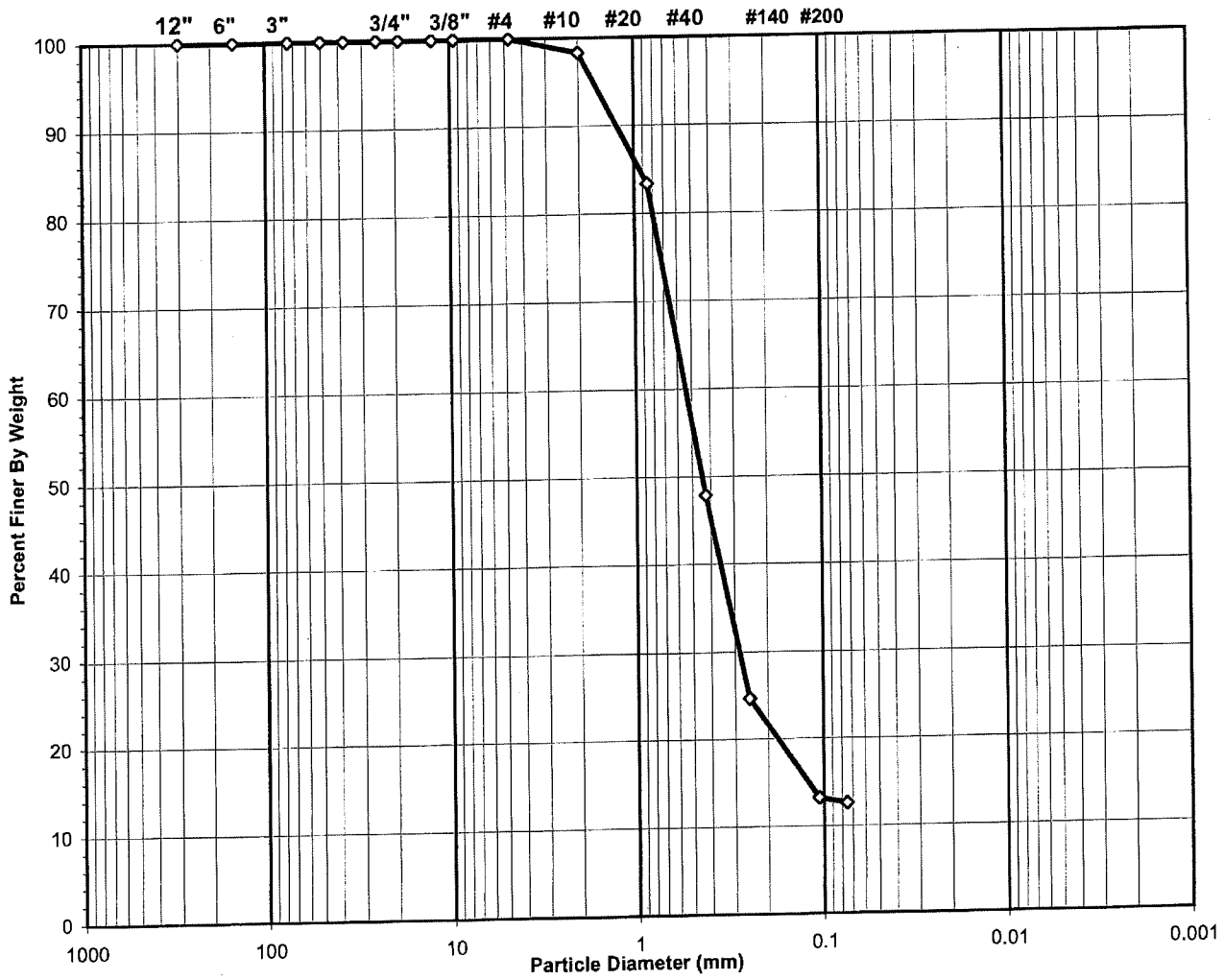

USCS Symbol ***SC, TESTED***

USCS Classification ***CLAYEY SAND***

Tested By SD Date 9/15/2010 Checked By GM Date 9-15-10

DCN: CT-S3C DATE 6-25-98 REVISION 2 *\\Server\data drive\2010 PROJECTS\2010-725 RSG JOHNSTON\[2010-725-01-01 SIEVON REV 4.XLS]Sheet1*

2200 Westinghouse Boulevard • Suite 103 • Raleigh, NC 27604 • Phone (919) 876-0405 • Fax (919) 876-0460 • www.geotechnics.net

Geotechnics
INTEGRITY IN TESTING

WASH SIEVE ANALYSIS

ASTM D 422-63 (SOP-S3)

Client	R.S.G. & ASSOCIATES	Boring No.	NA
Client Reference	JOHNSTON CO. C&D LF AREA 1 CLOSURE	Depth (ft)	NA
Project No.	2010-725-01	Sample No.	1
Lab ID	2010-725-01-01	Soil Color	**ORANGE**

Moisture Content of Passing 3/4" Material		Water Content of Retained 3/4" Material	
Tare No.	200	Tare No.	NA
Wgt.Tare + Wet Specimen (gm)	974.69	Wgt.Tare + Wet Specimen (gm)	NA
Wgt.Tare + Dry Specimen (gm)	894.00	Wgt.Tare + Dry Specimen (gm)	NA
Weight of Tare (gm)	171.74	Weight of Tare (gm)	NA
Weight of Water (gm)	80.69	Weight of Water (gm)	NA
Weight of Dry Soil (gm)	722.26	Weight of Dry Soil (gm)	NA
Moisture Content (%)	**11.2**	**Moisture Content (%)**	**NA**

Wet Weight -3/4" Sample (gm)	NA	Weight of the Dry Specimen (gm)	722.26
Dry Weight - 3/4" Sample (gm)	631.6	Weight of minus #200 material (gm)	90.71
Wet Weight +3/4" Sample (gm)	NA	Weight of plus #200 material (gm)	631.55
Dry Weight + 3/4" Sample (gm)	0.00		
Total Dry Weight Sample (gm)	NA		

Sieve Size	Sieve Opening (mm)	Wgt.of Soil Retained (gm)	Percent Retained (%)	Accumulated Percent Retained (%)	Percent Finer (%)	**Accumulated Percent Finer (%)**
12"	300	0.00	0.0	0.0	100.0	**100.0**
6"	150	0.00	0.0	0.0	100.0	**100.0**
3"	75	0.00	0.0	0.0	100.0	**100.0**
2"	50	0.00	0.0	0.0	100.0	**100.0**
1 1/2"	37.5	0.00	0.0	0.0	100.0	**100.0**
1"	25.0	0.00	0.0	0.0	100.0	**100.0**
3/4"	19.0	0.00	0.0	0.0	100.0	**100.0**
1/2"	12.50	0.00	0.0	0.0	100.0	**100.0**
3/8"	9.50	0.00	0.0	0.0	100.0	**100.0**
#4	4.75	0.00	0.0	0.0	100.0	**100.0**
#10	2.00	12.17	1.7	1.7	98.3	**98.3**
#20	0.850	108.09	15.0	16.7	83.3	**83.3**
#40	0.425	256.30	35.5	52.1	47.9	**47.9**
#60	0.250	167.54	23.2	75.3	24.7	**24.7**
#140	0.106	83.10	11.5	86.8	13.2	**13.2**
#200	0.075	4.35	0.6	87.4	12.6	**12.6**
Pan	-	90.71	12.6	100.0	-	-

Tested By SD Date 9/15/2010 Checked By GBM Date 9-15-10

DCN: CT-S3C DATE 6-25-98 REVISION:2 *\\Server\data drive\2010 PROJECTS\2010-725 RSG JOHNSTON\[2010-725-01-01 SIEVON REV 4.XLS]Sheet1*

2200 Westinghouse Boulevard • Suite 103 • Raleigh, NC 27604 • Phone (919) 876-0405 • Fax (919) 876-0460 • www.geotechnics.net

Geotechnics
INTEGRITY IN TESTING

SIEVE ANALYSIS
ASTM D 422-63 (SOP-S3)

Client	R.S.G. & ASSOCIATES	Boring No.	NA
Client Reference	JOHNSTON CO. C&D LF AREA 1 CLOSURE	Depth (ft)	NA
Project No.	2010-725-01	Sample No.	2
Lab ID	2010-725-01-02	Soil Color	**LIGHT ORANGE**

USCS	SIEVE ANALYSIS		HYDROMETER
	gravel	sand	silt and clay

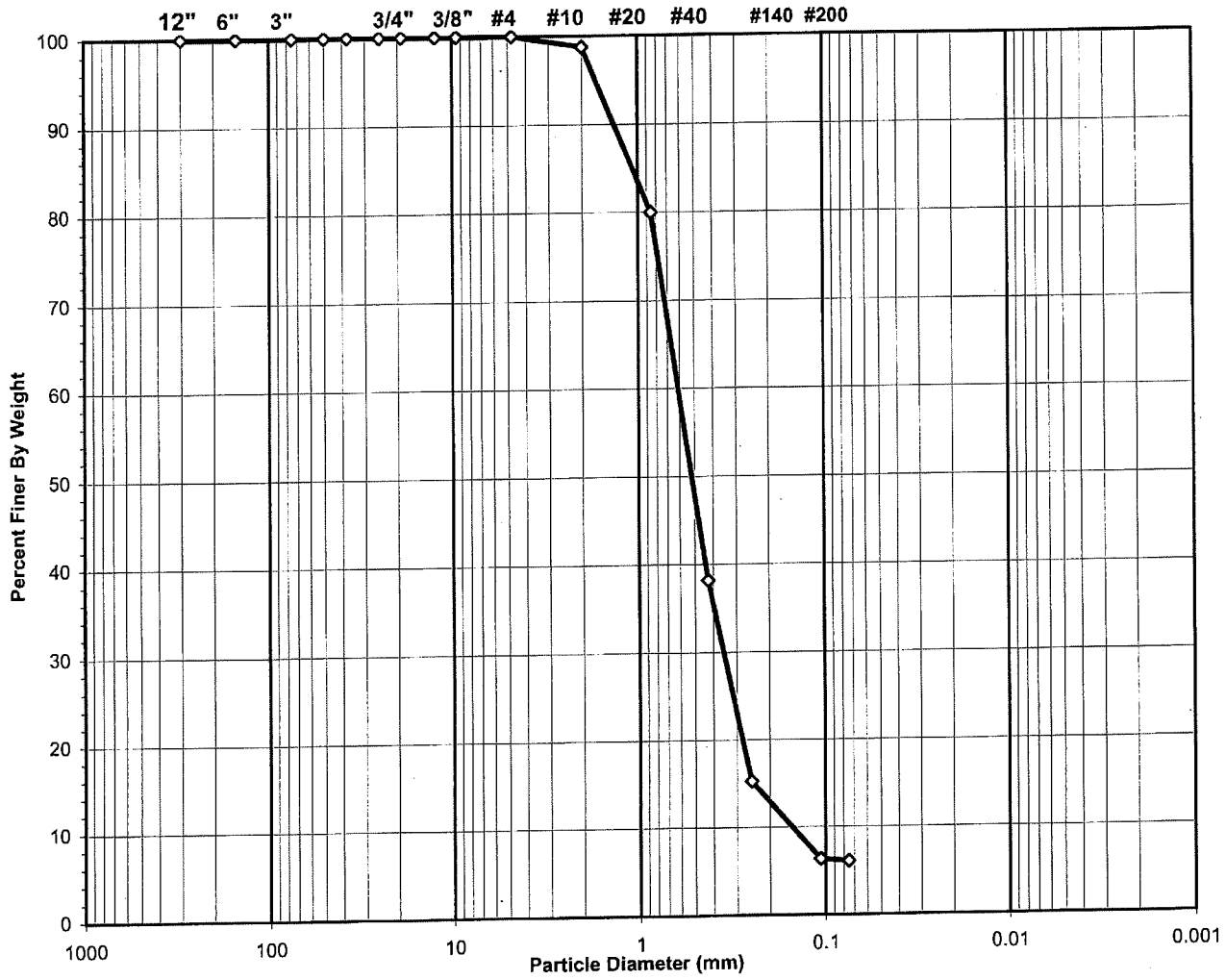

USCS Symbol	***SP-SC, TESTED***	**D60 =**	**0.6**	**CC =**	**1.3**
USCS Classification	***POORLY GRADED SAND WITH CLAY***	**D30 =**	**0.4**	**CU =**	**4.0**
		D10 =	**0.2**		

Tested By SD Date 9/15/2010 Checked By GEM Date 9-15-10

DCN: CT-S3C DATE 6-25-98 REVISION 2 *\\Server\data drive\2010 PROJECTS\2010-725 RSG JOHNSTON\[2010-725-01-02 SIEVON REV 4.XLS]Sheet1*

2200 Westinghouse Boulevard • Suite 103 • Raleigh, NC 27604 • Phone (919) 876-0405 • Fax (919) 876-0460 • www.geotechnics.net

geotechnics
INTEGRITY IN TESTING

WASH SIEVE ANALYSIS

ASTM D 422-63 (SOP-S3)

Client	R.S.G. & ASSOCIATES	Boring No.	NA
Client Reference	JOHNSTON CO. C&D LF AREA 1 CLOSURE	Depth (ft)	NA
Project No.	2010-725-01	Sample No.	2
Lab ID	2010-725-01-02	Soil Color	**LIGHT ORANGE**

Moisture Content of Passing 3/4" Material		Water Content of Retained 3/4" Material	
Tare No.	217	Tare No.	NA
Wgt.Tare + Wet Specimen (gm)	1035.63	Wgt.Tare + Wet Specimen (gm)	NA
Wgt.Tare + Dry Specimen (gm)	988.87	Wgt.Tare + Dry Specimen (gm)	NA
Weight of Tare (gm)	171.00	Weight of Tare (gm)	NA
Weight of Water (gm)	46.76	Weight of Water (gm)	NA
Weight of Dry Soil (gm)	817.87	Weight of Dry Soil (gm)	NA
Moisture Content (%)	**5.7**	**Moisture Content (%)**	**NA**

Wet Weight -3/4" Sample (gm)	NA	Weight of the Dry Specimen (gm)	817.87
Dry Weight - 3/4" Sample (gm)	768.4	Weight of minus #200 material (gm)	49.43
Wet Weight +3/4" Sample (gm)	NA	Weight of plus #200 material (gm)	768.44
Dry Weight + 3/4" Sample (gm)	0.00		
Total Dry Weight Sample (gm)	NA		

Sieve Size	Sieve Opening (mm)	Wgt.of Soil Retained (gm)	Percent Retained (%)	Accumulated Percent Retained (%)	Percent Finer (%)	**Accumulated Percent Finer (%)**
12"	300	0.00	0.0	0.0	100.0	**100.0**
6"	150	0.00	0.0	0.0	100.0	**100.0**
3"	75	0.00	0.0	0.0	100.0	**100.0**
2"	50	0.00	0.0	0.0	100.0	**100.0**
1 1/2"	37.5	0.00	0.0	0.0	100.0	**100.0**
1"	25.0	0.00	0.0	0.0	100.0	**100.0**
3/4"	19.0	0.00	0.0	0.0	100.0	**100.0**
1/2"	12.50	0.00	0.0	0.0	100.0	**100.0**
3/8"	9.50	0.00	0.0	0.0	100.0	**100.0**
#4	4.75	0.00	0.0	0.0	100.0	**100.0**
#10	2.00	10.11	1.2	1.2	98.8	**98.8**
#20	0.850	153.64	18.8	20.0	80.0	**80.0**
#40	0.425	342.06	41.8	61.8	38.2	**38.2**
#60	0.250	187.21	22.9	84.7	15.3	**15.3**
#140	0.106	73.21	9.0	93.7	6.3	**6.3**
#200	0.075	2.21	0.3	94.0	6.0	**6.0**
Pan	-	49.43	6.0	100.0	-	-

Tested By SD Date 9/15/2010 Checked By GEM Date 9-15-10

DCN: CT-S3C DATE 6-25-98 REVISION:2 *\\Server\data drive\2010 PROJECTS\2010-725 RSG JOHNSTON\[2010-725-01-02 SIEVON REV 4.XLS]Sheet1*

2200 Westinghouse Boulevard • Suite 103 • Raleigh, NC 27604 • Phone (919) 876-0405 • Fax (919) 876-0460 • www.geotechnics.net

geotechnics
INTEGRITY IN TESTING

MOISTURE DENSITY RELATIONSHIP

ASTM D698-91 SOP-S12

Client	R.S.G. & ASSOCIATES	Boring No.	NA
Client Reference	JOHNSTON CO. C&D LF AREA 1 CLOSURE	Depth (ft)	NA
Project No.	2010-725-01	Sample No.	1
Lab ID	2010-725-01-01	Test Method	**STANDARD**

Visual Description: ORANGE CLAYEY SAND

Optimum Water Content **12.3**
Maximum Dry Density **117.0**

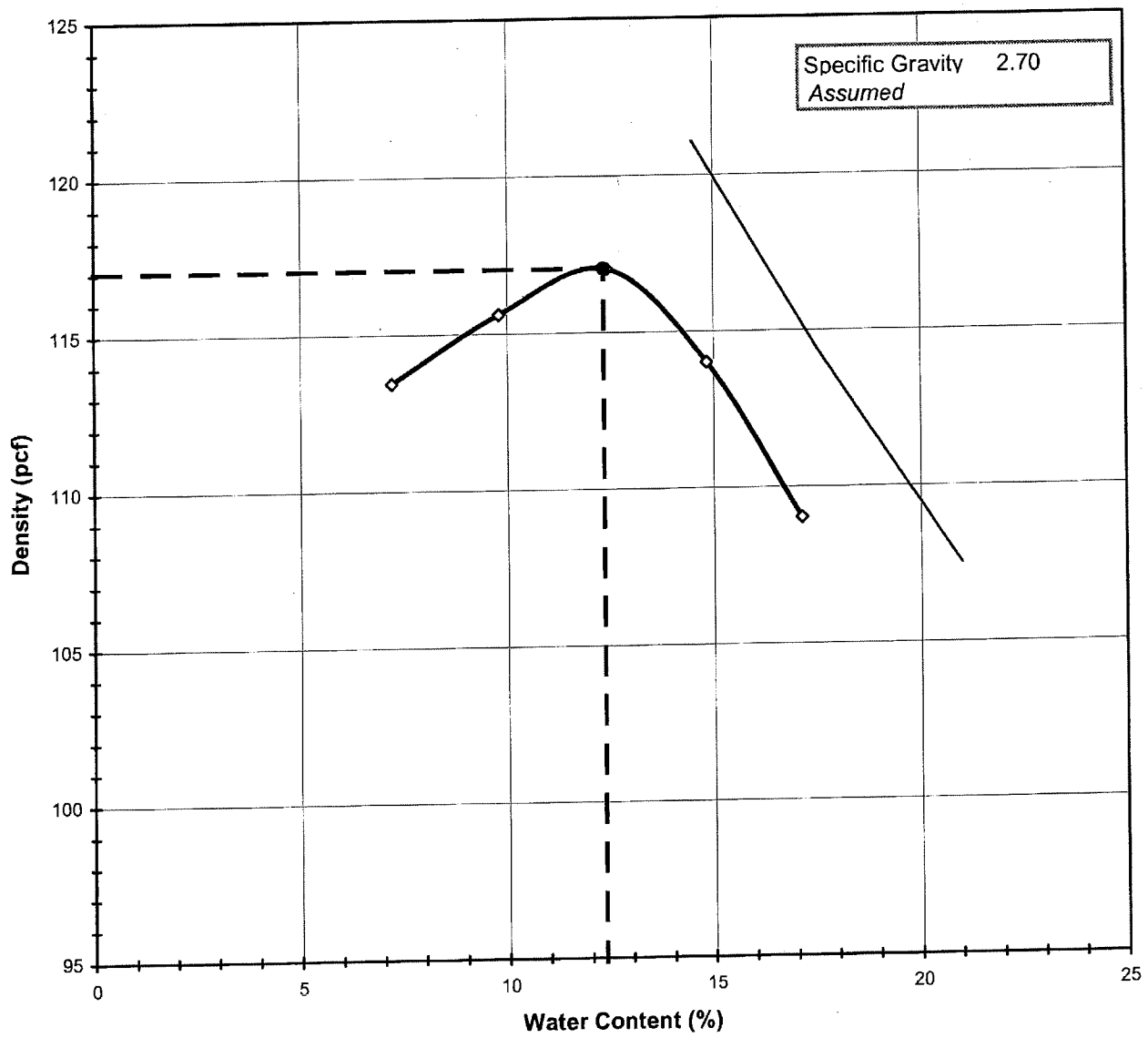

Tested By SD *Date* 9/15/2010 *Checked By* GM *Date* 9-16-10

DCN:CT-S12 DATE:12/11/00 REVISION 5 *\\Server\data drive\2010 PROJECTS\2010-725 RSG JOHNSTON\[2010-725-01-01 Proctor.XLS]Sheet1*

2200 Westinghouse Boulevard • Suite 103 • Raleigh, NC 27604 • Phone (919) 876-0405 • Fax (919) 876-0460 • www.geotechnics.net

Geotechnics
INTEGRITY IN TESTING

MOISTURE - DENSITY RELATIONSHIP

ASTM D698-91 SOP-S12

Client	R.S.G. & ASSOCIATES	Boring No.	NA
Client Reference	JOHNSTON CO. C&D LF AREA 1 CLOSURE	Depth (ft)	NA
Project No.	2010-725-01	Sample No.	1
Lab ID	2010-725-01-01		

Visual Description: ORANGE CLAYEY SAND

Total Weight of the Sample (gm)	28876
As Received Water Content(%)	NA
Assumed Specific Gravity	2.70
Percent Retained on 3/4"	NA
Percent Retained on 3/8"	NA
Percent Retained on #4	NA
Oversize Material	Not included
Procedure Used	A

TestType		**STANDARD**
Rammer Weight (lbs)		5.5
Rammer Drop (in)		12
Rammer Type		MECHANICAL
Machine ID	R	174
Mold ID	R	172
Mold diameter		4"
Weight of the Mold		4304
Volume of the Mold(cc)		941

Mold / Specimen

Point No.	**1**	**2**	**3**	**4**	**5**
Wt. of Mold & WS (gm)	6139	6219	6288	6279	6230
Wt.of Mold (gm)	4304	4304	4304	4304	4304
Wt. of WS	1835	1915	1984	1975	1926
Mold Volume (cc)	941	941	941	941	941

Moisture Content / Density

Tare Number	310	K-7	308	307	398
Wt. of Tare & WS (gm)	436.70	490.20	605.30	478.00	469.30
Wt. of Tare & DS (gm)	414.72	456.29	550.77	430.59	412.98
Wt. of Tare (gm)	109.90	110.20	111.70	111.00	84.20
Wt. of Water (gm)	21.98	33.91	54.53	47.41	56.32
Wt. of DS (gm)	304.82	346.09	439.07	319.59	328.78

Wet Density (gm/cc)	1.95	2.03	2.11	2.10	2.05
Wet Density (pcf)	121.6	126.9	131.6	130.9	127.7
Moisture Content (%)	**7.2**	**9.8**	**12.4**	**14.8**	**17.1**
Dry Density (pcf)	**113.4**	**115.6**	**117.0**	**114.0**	**109.0**

Zero Air Voids

Moisture Content (%)	14.5	17.5	21.0
Dry Unit Weight (pcf)	121.1	114.4	107.5

Tested By SD *Date* 9/15/2010 *Checked By* GEM *Date* 9-16-10

DCN:CT-S12 DATE:12/11/00 REVISION 5 *\\Server\data drive\2010 PROJECTS\2010-725 RSG JOHNSTON\[2010-725-01-01 Proctor.XLS]Sheet1*

2200 Westinghouse Boulevard • Suite 103 • Raleigh, NC 27604 • Phone (919) 876-0405 • Fax (919) 876-0460 • www.geotechnics.net

geotechnics
INTEGRITY IN TESTING

MOISTURE DENSITY RELATIONSHIP

ASTM D698-91 SOP-S12

Client	R.S.G. & ASSOCIATES	Boring No.	NA
Client Reference	JOHNSTON CO. C&D LF AREA 1 CLOSURE	Depth (ft)	NA
Project No.	2010-725-01	Sample No.	2
Lab ID	2010-725-01-02	Test Method	**STANDARD**

Visual Description: LIGHT ORANGE POORLY GRADED SAND WITH CLAY

Optimum Water Content **12.1**
Maximum Dry Density **108.9**

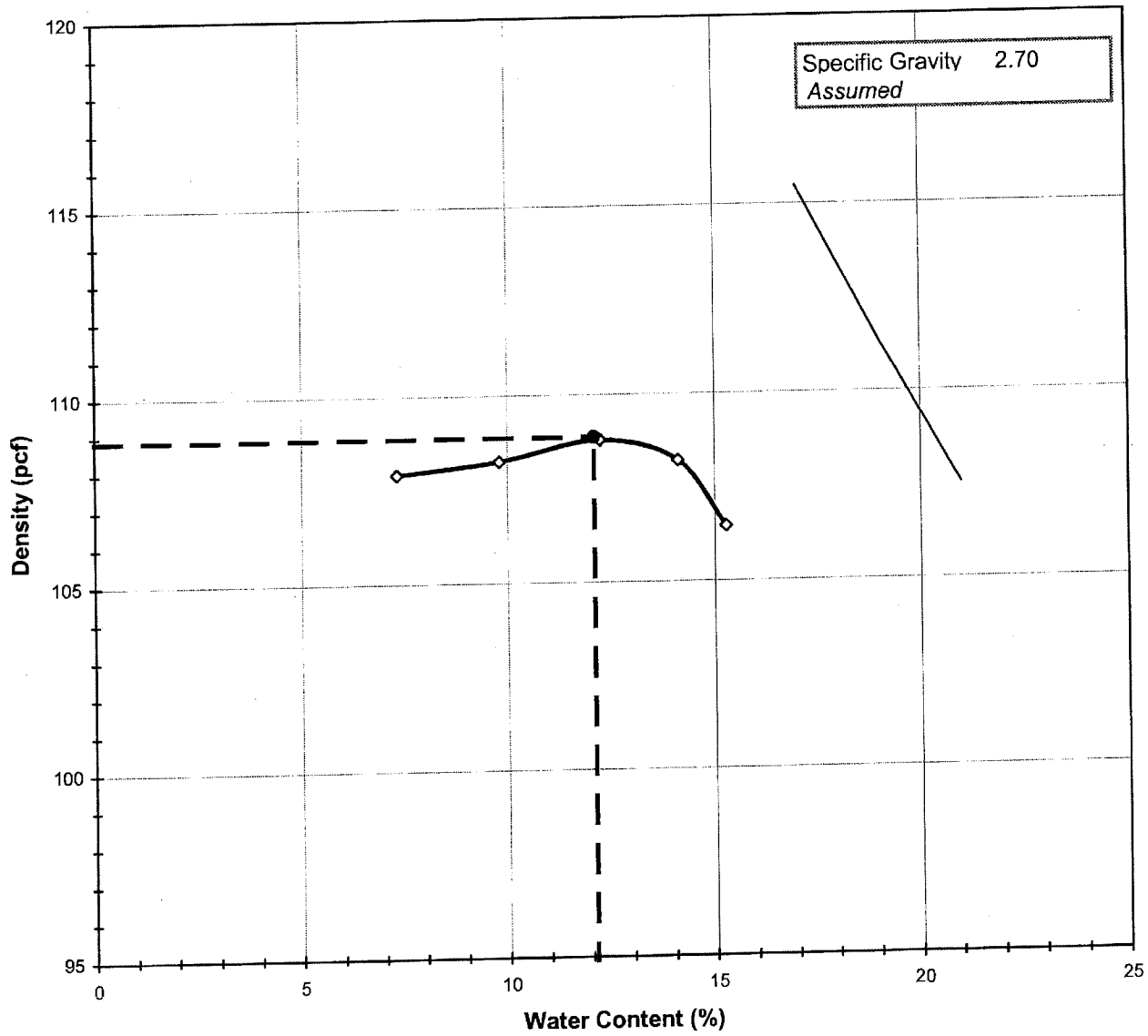

Tested By SD *Date* 12/9/2008 *Checked By* MMS *Date* 9-16-10

DCN:CT-S12 DATE:12/11/00 REVISION 5 *\\SERVER\Data Drive\2010 PROJECTS\2010-725 RSG JOHNSTON\[2010-725-01-02 Proctor_XLS]Sheet1*

2200 Westinghouse Boulevard • Suite 103 • Raleigh, NC 27604 • Phone (919) 876-0405 • Fax (919) 876-0460 • www.geotechnics.net

geotechnics
INTEGRITY IN TESTING

MOISTURE - DENSITY RELATIONSHIP

ASTM D698-91 SOP-S12

Client	R.S.G. & ASSOCIATES	Boring No.	NA
Client Reference	JOHNSTON CO. C&D LF AREA 1 CLOSURE	Depth (ft)	NA
Project No.	2010-725-01	Sample No.	2
Lab ID	2010-725-01-02		

Visual Description: LIGHT ORANGE POORLY GRADED SAND WITH CLAY

Total Weight of the Sample (gm)	28009
As Received Water Content(%)	NA
Assumed Specific Gravity	2.70
Percent Retained on 3/4"	NA
Percent Retained on 3/8"	NA
Percent Retained on #4	NA
Oversize Material	Not included
Procedure Used	A

TestType		**STANDARD**
Rammer Weight (lbs)		5.5
Rammer Drop (in)		12
Rammer Type		MECHANICAL
Machine ID	R	174
Mold ID	R	172
Mold diameter		4"
Weight of the Mold		4305
Volume of the Mold(cc)		941

Mold / Specimen

Point No.	**1**	**2**	**3**	**4**	**5**
Wt. of Mold & WS (gm)	6052	6098	6147	6168	6156
Wt.of Mold (gm)	4305	4305	4305	4305	4305
Wt. of WS	1747	1793	1842	1863	1851
Mold Volume (cc)	941	941	941	941	941

Moisture Content / Density

Tare Number	318	314	304	300	317
Wt. of Tare & WS (gm)	460.40	448.40	541.90	363.90	467.40
Wt. of Tare & DS (gm)	434.95	415.95	494.88	332.56	416.64
Wt. of Tare (gm)	86.90	85.10	110.70	110.60	84.30
Wt. of Water (gm)	25.45	32.45	47.02	31.34	50.76
Wt. of DS (gm)	348.05	330.85	384.18	221.96	332.34

Wet Density (gm/cc)	1.86	1.90	1.96	1.98	1.97
Wet Density (pcf)	115.8	118.9	122.1	123.5	122.7
Moisture Content (%)	**7.3**	**9.8**	**12.2**	**14.1**	**15.3**
Dry Density (pcf)	**107.9**	**108.2**	**108.8**	**108.2**	**106.5**

Zero Air Voids

Moisture Content (%)	17.0	19.0	21.0
Dry Unit Weight (pcf)	115.5	111.4	107.5

Tested By SD *Date* 12/9/2008 *Checked By* [signature] *Date* 9-16-10

DCN:CT-S12 DATE:12/11/00 REVISION 5 *\\SERVER\Data Drive\2010 PROJECTS\2010-725 RSG JOHNSTON\[2010-725-01-02 Proctor.XLS]Sheet1*

2200 Westinghouse Boulevard • Suite 103 • Raleigh, NC 27604 • Phone (919) 876-0405 • Fax (919) 876-0460 • www.geotechnics.net

Richardson Smith Gardner & Associates

ENGINEERING AND GEOLOGICAL SERVICES

DATE: 11/9/2010

RECORDED BY: BSH

JOB NO: Johnston 09-5

PAGE: 1 of 1

Pressure Test Report

Test Time Calculator: *NOTE - This formula should be used for pipes with nominal diameters from 4" to 30". Consult with pipe/fitting manufacturer if pipe size is outside of this range.*

Time test (T) is determined using the following formula from **Section 9.2** of **ASTM standard F 1417 - 92,** and modified for **0.5 psig**, as directed in **Section 9.5** of the standard. Input 1) pipe diameter and 2) length for the section tested in the shaded cells below. For multiple diameters, perform this calculation for each pipe diameter being tested, and take the sum total T.

$$T = (0.085\ DK/Q)/2$$

where:

D =	16	nominal pipe size, inches
L =	177	length of test section, feet
K =	1.186608	0.000419 DL (not less than 1.0)
Q =	0.0015	leak rate in cfm/square feet of internal surface = 0.0015 CFM/SF
T =	**537.93**	**seconds**
	8.97	**minutes**
	0.15	**hours**

Pressure Test Field Log

Contractor or Company: ES&J

Pipe Line Description: DP-11 16" HDPE SDR26
(*material, thickness rating, etc.*)

Section Tested: From: Top

To: Bottom

Test Section: Diameter: 16" HDPE Length: 177ft

Test Start Time/Date: 2:15pm Maximum Start Pressure (psig): 4

Test End Time/Date: 2:26pm Maximum End Pressure (psig): 4

Total Test Time: 9min Total Pressure Drop (psig): 0

Test Result (circle one): **Pass** (pressure drop less than 0.5 psig)
Fail (pressure drop greater than 0.5 psig)

Leak Location (if Fail):

Notes:

Richardson Smith Gardner & Associates

ENGINEERING AND GEOLOGICAL SERVICES

DATE: 11/9/2010

RECORDED BY: BSH

JOB NO: Johnston 09-5

PAGE: 1 of 1

Pressure Test Report

Test Time Calculator: *NOTE - This formula should be used for pipes with nominal diameters from 4" to 30". Consult with pipe/fitting manufacturer if pipe size is outside of this range.*

Time test (T) is determined using the following formula from **Section 9.2** of **ASTM standard F 1417 - 92,** and modified for **0.5 psig**, as directed in **Section 9.5** of the standard. Input 1) pipe diameter and 2) length for the section tested in the shaded cells below. For multiple diameters, perform this calculation for each pipe diameter being tested, and take the sum total T.

$$T = (0.085\ DK/Q)/2$$

where:

D =	18	nominal pipe size, inches
L =	170	length of test section, feet
K =	1.28214	0.000419 DL (not less than 1.0)
Q =	0.0015	leak rate in cfm/square feet of internal surface = 0.0015 CFM/SF
T =	**653.89**	**seconds**
	10.90	**minutes**
	0.18	**hours**

Pressure Test Field Log

Contractor or Company: ES&J

Pipe Line Description: DP-12 18" HDPE SDR26
(*material, thickness rating, etc.*)

Section Tested: From: Top

To: Bottom

Test Section: Diameter: 18" HDPE Length: 170ft

Test Start Time/Date: 4:00pm Maximum Start Pressure (psig): 4

Test End Time/Date: 4:11pm Maximum End Pressure (psig): 4

Total Test Time: 11min Total Pressure Drop (psig): 0

Test Result (circle one): **Pass** (pressure drop less than 0.5 psig)
Fail (pressure drop greater than 0.5 psig)

Leak Location (if Fail):

Notes:

Richardson Smith Gardner & Associates

ENGINEERING AND GEOLOGICAL SERVICES

DATE: 12/6/2010

RECORDED BY: BSH

JOB NO: Johnston 09-5

PAGE: 1 of 1

Pressure Test Report

Test Time Calculator: *NOTE - This formula should be used for pipes with nominal diameters from 4" to 30". Consult with pipe/fitting manufacturer if pipe size is outside of this range.*

Time test (T) is determined using the following formula from **Section 9.2** of **ASTM standard F 1417 - 92**, and modified for **0.5 psig**, as directed in **Section 9.5** of the standard. Input 1) pipe diameter and 2) length for the section tested in the shaded cells below. For multiple diameters, perform this calculation for each pipe diameter being tested, and take the sum total T.

$$T = (0.085\ DK/Q)/2$$

where:

D =	16	nominal pipe size, inches
L =	217	length of test section, feet
K =	1.454768	0.000419 DL (not less than 1.0)
Q =	0.0015	leak rate in cfm/square feet of internal surface = 0.0015 CFM/SF
T =	**659.49**	**seconds**
	10.99	**minutes**
	0.18	**hours**

Pressure Test Field Log

Contractor or Company: ES&J

Pipe Line Description: DP-21 16" HDPE SDR26
(*material, thickness rating, etc.*)

Section Tested: From: Top

To: Bottom

Test Section: Diameter: 16" HDPE Length: 217

Test Start Time/Date: 1:38 PM Maximum Start Pressure (psig): 4

Test End Time/Date: 1:50pm Maximum End Pressure (psig): 4

Total Test Time: 11 min Total Pressure Drop (psig): 0

Test Result (circle one): **Pass** (pressure drop less than 0.5 psig)
Fail (pressure drop greater than 0.5 psig)

Leak Location (if Fail):

Notes:

Richardson Smith Gardner & Associates

ENGINEERING AND GEOLOGICAL SERVICES

DATE: 11/17/2010

RECORDED BY: BSH

JOB NO: Johnston 09-5

PAGE: 1 of 1

Pressure Test Report

Test Time Calculator: *NOTE - This formula should be used for pipes with nominal diameters from 4" to 30". Consult with pipe/fitting manufacturer if pipe size is outside of this range.*

Time test (*T*) is determined using the following formula from **Section 9.2** of **ASTM standard F 1417 - 92**, and modified for **0.5 psig**, as directed in **Section 9.5** of the standard. Input 1) pipe diameter and 2) length for the section tested in the shaded cells below. For multiple diameters, perform this calculation for each pipe diameter being tested, and take the sum total T.

$$T = (0.085\ DK/Q)/2$$

where:

D =	18	nominal pipe size, inches
L =	290	length of test section, feet
K =	2.18718	0.000419 DL (not less than 1.0)
Q =	0.0015	leak rate in cfm/square feet of internal surface = 0.0015 CFM/SF
T =	**1115.46**	**seconds**
	18.59	**minutes**
	0.31	**hours**

Pressure Test Field Log

Contractor or Company: ES&J

Pipe Line Description: DP-22 section ABC 18" HDPE SDR26
(*material, thickness rating, etc.*)

Section Tested: From: Top

To: Bottom

Test Section: Diameter: 18" HDPE Length: 290

Test Start Time/Date: 2:20pm Maximum Start Pressure (psig): 4

Test End Time/Date: 2:40pm Maximum End Pressure (psig): 4

Total Test Time: 19 min Total Pressure Drop (psig): 0

Test Result (circle one): **Pass** (pressure drop less than 0.5 psig)
Fail (pressure drop greater than 0.5 psig)

Leak Location (if Fail):

Notes:

Richardson Smith Gardner & Associates

ENGINEERING AND GEOLOGICAL SERVICES

DATE: 11/9/2010

RECORDED BY: BSH

JOB NO: Johnston 09-5

PAGE: 1 of 1

Pressure Test Report

Test Time Calculator: *NOTE - This formula should be used for pipes with nominal diameters from 4" to 30". Consult with pipe/fitting manufacturer if pipe size is outside of this range.*

Time test (*T*) is determined using the following formula from **Section 9.2** of **ASTM standard F 1417 - 92,** and modified for **0.5 psig**, as directed in **Section 9.5** of the standard. Input 1) pipe diameter and 2) length for the section tested in the shaded cells below. For multiple diameters, perform this calculation for each pipe diameter being tested, and take the sum total T.

$$T = (0.085\ DK/Q)/2$$

where:

D =	18	nominal pipe size, inches
L =	170	length of test section, feet
K =	1.28214	0.000419 DL (not less than 1.0)
Q =	0.0015	leak rate in cfm/square feet of internal surface = 0.0015 CFM/SF
T =	**653.89**	**seconds**
	10.90	**minutes**
	0.18	**hours**

Pressure Test Field Log

Contractor or Company: ES&J

Pipe Line Description: DP-23 section AB 18" HDPE SDR26
(*material, thickness rating, etc.*)

Section Tested: From: Top

To: Bottom

Test Section: Diameter: 18" HDPE Length: 170

Test Start Time/Date: 11:43am Maximum Start Pressure (psig): 4

Test End Time/Date: 11:59am Maximum End Pressure (psig): 4

Total Test Time: 11min Total Pressure Drop (psig): 0

Test Result (circle one): **Pass** (pressure drop less than 0.5 psig)
Fail (pressure drop greater than 0.5 psig)

Leak Location (if Fail):

Notes:

Richardson Smith Gardner & Associates

ENGINEERING AND GEOLOGICAL SERVICES

DATE: 11/9/2010

RECORDED BY: BSH

JOB NO: Johnston 09-5

PAGE: 1 of 1

Pressure Test Report

Test Time Calculator: *NOTE - This formula should be used for pipes with nominal diameters from 4" to 30". Consult with pipe/fitting manufacturer if pipe size is outside of this range.*

Time test (*T*) is determined using the following formula from **Section 9.2** of **ASTM standard F 1417 - 92,** and modified for **0.5 psig**, as directed in **Section 9.5** of the standard. Input 1) pipe diameter and 2) length for the section tested in the shaded cells below. For multiple diameters, perform this calculation for each pipe diameter being tested, and take the sum total T.

$$T = (0.085\ DK/Q)/2$$

where:

D =	18	nominal pipe size, inches
L =	170	length of test section, feet
K =	1.28214	0.000419 DL (not less than 1.0)
Q =	0.0015	leak rate in cfm/square feet of internal surface = 0.0015 CFM/SF
T =	**653.89**	**seconds**
	10.90	**minutes**
	0.18	**hours**

Pressure Test Field Log

Contractor or Company: ES&J

Pipe Line Description: DP-23 section BC 18" HDPE SDR26
(*material, thickness rating, etc.*)

Section Tested: From: Top

To: Bottom

Test Section: Diameter: 18" HDPE Length: 170

Test Start Time/Date: 1:14pm Maximum Start Pressure (psig): 4

Test End Time/Date: 1:23pm Maximum End Pressure (psig): 4

Total Test Time: 11min Total Pressure Drop (psig): 0

Test Result (circle one): **Pass** (pressure drop less than 0.5 psig)
Fail (pressure drop greater than 0.5 psig)

Leak Location (if Fail):

Notes:

Appendix F

Interface Shear Strength Test Data

Construction Quality Assurance Report
Johnston County C&D Landfill - Area 1 Closure
Johnston County, North Carolina

Table 1: Summary of Interface Shear Strength Test Data

Interface	Peak Shear Strength Envelope Determined by Direct Shear Testing[1] (Degrees)	Peak Shear Stress @ (Normal Load)	Required Shear Stress @ (Normal Load)	Comment
1. 30 mil TLLDPE vs. Existing Cover Soils	ϕ = 44 (Secant)	194 psf (200 psf)	115 psf (200 psf)	Exceeds Requirement
2. Drainage Geocomposite vs. 30 mil TLLDPE	ϕ = 51 (Secant)	245 psf (200 psf)	115 psf (200 psf)	Exceeds Requirement
3. Vegetative Soil Layer vs. Drainage Geocomposite	ϕ = 47 (Secant)	213 psf (200 psf)	115 psf (200 psf)	Exceeds Requirement

Notes:

1. Tests performed by Precision Geosynthetic Laboratories, Anaheim, CA. Peak shear strength envelope based on best-fit line over the normal stresses evaluated.
2. Interface shear strength data on materials used in the partial closure in 2009 are provided in the previously approved Phase 4A - Cell 3 CQA Report. The requirements shown above were also met with the materials used in the partial closure.

Appendix G

Geomembrane CQA Data

G1. **Manufacturer's Product Data Submittals and Quality Control Certificates**

G2. **Geosynthetics Inventory**

G3. **CQA Test Results - Material Control Tests**

G4. **Field Trial Seam Logs***

G5. **Panel Placement Logs***

G6. **Panel Seaming Logs (Includes Nondestructive Seam Testing Documentation (Air Pressure Tests))***

G7. **CQC Test Results - Destructive Test Logs (Field)***

G8. **CQA Test Results - Destructive Seam Testing (Laboratory)***

G9. **Repair Logs (Includes Nondestructive Testing Documentation (Vacuum Tests))***

****Includes Information from 2009 Partial Closure. Note that product, inventory, and material control test information from 2009 is included with the previously approved Phase 4A - Cell 3 CQA Report.***

GSE

The Pioneer of Geosynthetics

S I N C E 1 9 8 3

Product Data Sheet - OT

GSE 30 mil UltraFlex Textured GRI-GM17 Geomembrane

GSE 30 mil UltraFlex Textured GRI-GM17 is a co-extruded textured linear low density polythylene (LLDPE) geomembrane textured on both sides. It is manufactured from the highest quality resin specifically formulated for flexible geomembranes. This product is used in applications that require increased frictional resistance, flexibility and elongation properties where differential or localized subgrade settlements may occur such as in a landfill closure application.

Product Specifications

These product specifications meet or exceed GRI GM 17.

TESTED PROPERTY	TEST METHOD	FREQUENCY	MINIMUM AVERAGE VALUE 30 mil
Thickness, (minimum average) mil (mm)	ASTM D 5994	every roll	28.5 (0.72)
Lowest individual for 8 out of 10 values			27.0 (0.68)
Lowest individual for any of 10 values			25.5 (0.64)
Density, g/cm^3	ASTM D 1505	200,000 lb	0.92
Tensile Properties (each direction)	ASTM D 6693, Type IV	20,000 lb	
Strength at Break, lb/in-width (N/mm)	Dumbell, 2 ipm		45 (7.8)
Elongation at Break, %	G.L. 2.0 in (51 mm)		250
Tear Resistance, lb (N)	ASTM D 1004	45,000 lb	16 (71)
Puncture Resistance, lb (N)	ASTM D 4833	45,000 lb	33 (146)
Carbon Black Content, % (Range)	ASTM D 1 603*/421 8	20,000 lb	2.0 - 3.0
Carbon Black Dispersion	ASTM D 5596	45,000 lb	Note[1]
Asperity Height, mil (mm)	ASTM D 7466	second roll	10 (0.25)
Oxidative Induction Time, min	ASTM D 3895, 200° C; O_2, 1 atm	200,000 lb	>140
TYPICAL ROLL DIMENSIONS			
Roll Length[2], ft (m)	Double-Sided Textured		830 (252)
Roll Width[2], ft (m)			22.5 (6.9)
Roll Area, ft^2 (m^2)	Double-Sided Textured		18,675 (1,734)

NOTES:

- [1]Dispersion only applies to near spherical agglomerates. 9 of 10 views shall be Category 1 or 2. No more than 1 view from Category 3.
- [2]Roll lengths and widths have a tolerance of ± 1%.
- GSE UltraFlex Textured Double-Sided is available in rolls weighing approximately 4,000 lb (1,800 kg).
- All GSE geomembranes have dimensional stability of ±2% when tested according to ASTM D 1204 and LTB of <-77° C when tested according to ASTM D 746.
- *Modified.

This information is provided for reference purposes only and is not intended as a warranty or guarantee. GSE assumes no liability in connection with the use of this information. Specifications subject to change without notice.

GSE and other trademarks in this document are registered trademarks of GSE Lining Technology, LLC in the United States and certain foreign countries.

GSE Roll Allocation

Order 62244
Customer Hallaton, Inc.
Site Johnston County Area 1 Closure

Roll#	*Resin Lot*	*Product Code*	*Description*	*Mfg. Date*	*Length*
105154397	CAH811610	LDT-030GE-BBB-B-00	LUT030G000	9/12/2010	830
105154398	CAH811830	LDT-030GE-BBB-B-00	LUT030G000	9/12/2010	830
105154399	CAH811830	LDT-030GE-BBB-B-00	LUT030G000	9/12/2010	830
105154400	CAH811830	LDT-030GE-BBB-B-00	LUT030G000	9/12/2010	830
105154405	CAH811830	LDT-030GE-BBB-B-00	LUT030G000	9/12/2010	830
105154406	CAH811830	LDT-030GE-BBB-B-00	LUT030G000	9/12/2010	830
105154407	CAH811830	LDT-030GE-BBB-B-00	LUT030G000	9/12/2010	830
105154408	CAH811830	LDT-030GE-BBB-B-00	LUT030G000	9/12/2010	830
105154409	CAH811830	LDT-030GE-BBB-B-00	LUT030G000	9/12/2010	830
105154410	CAH811830	LDT-030GE-BBB-B-00	LUT030G000	9/12/2010	830
105154411	CAH811830	LDT-030GE-BBB-B-00	LUT030G000	9/12/2010	830
105154412	CAH811830	LDT-030GE-BBB-B-00	LUT030G000	9/13/2010	830
105154413	CAH811830	LDT-030GE-BBB-B-00	LUT030G000	9/13/2010	830
105154414	CAH811830	LDT-030GE-BBB-B-00	LUT030G000	9/13/2010	830
105154415	CAH811830	LDT-030GE-BBB-B-00	LUT030G000	9/13/2010	830
105154416	CAH811830	LDT-030GE-BBB-B-00	LUT030G000	9/13/2010	830
105154417	CAH811830	LDT-030GE-BBB-B-00	LUT030G000	9/13/2010	830
105154418	CAH811830	LDT-030GE-BBB-B-00	LUT030G000	9/13/2010	830
105154419	CAH811830	LDT-030GE-BBB-B-00	LUT030G000	9/13/2010	830
105154420	CAH811830	LDT-030GE-BBB-B-00	LUT030G000	9/13/2010	830
105154423	CAH811830	LDT-030GE-BBB-B-00	LUT030G000	9/13/2010	830
105154424	CAH811830	LDT-030GE-BBB-B-00	LUT030G000	9/13/2010	830
105154425	CAH811830	LDT-030GE-BBB-B-00	LUT030G000	9/13/2010	830
105154426	CAH811830	LDT-030GE-BBB-B-00	LUT030G000	9/13/2010	830
105154427	CAH811830	LDT-030GE-BBB-B-00	LUT030G000	9/13/2010	830
105154428	CAH811830	LDT-030GE-BBB-B-00	LUT030G000	9/14/2010	830
105154429	CAH811830	LDT-030GE-BBB-B-00	LUT030G000	9/14/2010	830
105154430	CAH811830	LDT-030GE-BBB-B-00	LUT030G000	9/14/2010	830
105154432	CAH811830	LDT-030GE-BBB-B-00	LUT030G000	9/14/2010	830
105154433	CAH811830	LDT-030GE-BBB-B-00	LUT030G000	9/14/2010	830
105154434	CAH811830	LDT-030GE-BBB-B-00	LUT030G000	9/14/2010	830

Roll Test Data Report

Lining Technology, Inc

Sales Order No.	Project Number	Customer Name	Project Location	Product Name	Report Date
62244		Hallaton, Inc.	Smithfield, NC	LDT-030GE-BBB-B-00	9/15/2010

GSE QC APPROVED

	ASTM D 5994		ASTM D638,Type IV / D6693				ASTM D 1004		ASTM D 4833	ASTM D 1505	ASTM D 4218/1603	ASTM D 5596	GRI GM 12	
	Average Thickness	Minimum Thickness	TD Strength @ Break	MD Strength @ Break	TD Elongation @ Break	MD Elongation @ Break	TD Tear Resistance	MD Tear Resistance	Puncture Resistance	Density	Carbon Black Content	Carbon Black Dispersion	Asperity Height Side A	Asperity Height Side B
Roll No.	(mils)	(mils)	(ppi)	(ppi)	(%)	(%)	(lbs)	(lbs)	(lbs)	(g/cc)	(%)	Views in Cat1 - Cat2	(mils)	(mils)
	every roll		every 3rd				every 3rd		every 3rd	every 3rd	every 3rd	every 3rd	every 2nd	
105154397	30	26	101	113	593	614	20	21	77	0.928	2.33	10	22	21
105154398	29	26	110	121	592	605	20	22	77	0.929	2.34	10	22	21
105154399	30	29	110	121	592	605	20	22	77	0.929	2.34	10	22	21
105154400	30	29	110	121	592	605	20	22	77	0.929	2.34	10	21	21
105154405	30	28	108	120	571	616	25	24	80	0.928	2.46	10	22	21
105154406	30	30	108	120	571	616	25	24	80	0.928	2.46	10	21	21
105154407	29	28	112	125	587	621	22	23	78	0.929	2.25	10	21	21
105154408	29	28	112	125	587	621	22	23	78	0.929	2.25	10	20	20
105154409	29	28	112	125	587	621	22	23	78	0.929	2.25	10	20	20
105154410	29	27	95	120	547	623	21	22	77	0.929	2.47	10	22	20
105154411	29	28	95	120	547	623	21	22	77	0.929	2.47	10	22	20
105154412	29	28	95	120	547	623	21	22	77	0.929	2.47	10	22	21
105154413	29	28	111	116	608	604	23	23	79	0.93	2.37	10	22	21
105154414	29	28	111	116	608	604	23	23	79	0.93	2.37	10	21	23
105154415	31	30	111	116	608	604	23	23	79	0.93	2.37	10	21	23
105154416	31	30	102	132	498	611	25	26	83	0.93	2.46	10	21	25
105154417	30	29	102	132	498	611	25	26	83	0.93	2.46	10	21	25
105154418	30	29	102	132	498	611	25	26	83	0.93	2.46	10	21	23
105154419	31	30	98	119	530	613	22	24	78	0.927	2.26	10	21	23
105154420	30	28	98	119	530	613	22	24	78	0.927	2.26	10	22	21
105154423	30	28	100	118	567	620	21	23	76	0.927	2.31	10	22	21
105154424	30	28	100	118	567	620	21	23	76	0.927	2.31	10	22	21
105154425	30	29	99	117	566	612	21	23	76	0.927	2.29	10	22	22
105154426	29	28	99	117	566	612	21	23	76	0.927	2.29	10	22	22
105154427	29	29	99	117	566	612	21	23	76	0.927	2.29	10	21	22
105154428	30	29	103	131	584	688	21	23	80	0.927	2.28	10	21	22
105154429	29	26	103	131	584	688	21	23	80	0.927	2.28	10	21	22
105154430	29	26	103	131	584	688	21	23	80	0.927	2.28	10	21	22
105154432	30	26	108	130	565	643	23	25	81	0.926	2.33	10	29	27
105154433	30	28	108	130	565	643	23	25	81	0.926	2.33	10	29	27
105154434	31	30	108	130	565	643	23	25	81	0.926	2.33	10	29	27

Laboratory Manager: Jane Allen

GSE-8.2.4-029 Rev 01 02/10

This test report shall not be reproduced, except in full, without written approval of the laboratory.

19103 Gundle Road - Houston, Texas 77073

Chevron Phillips Chemical Company LP

CoA Date: 08/26/2010

Certificate of Analysis

Shipped To: GSE LINING TECHNOLOGY LLC
19103 GUNDLE ROAD
WESTFIELD TX 77090
USA

Recipient: Phouangsavanh
Fax:

CPC Delivery #: 88116646
PO #: 03-062900
Weight: 184300 LB
Ship Date: 08/26/2010
Package: BULK
Mode: Hopper Car
Car #: PSPX008116
Seal No: 506812

Product: PE 7104 BULK

Lot Number: CAH811610

Property	Test Method	Value	Unit
Melt Index	ASTM D1238	0.34	g/10mi
Density	D1505 or D4883	0.918	g/cm3
Production date		20100825	

The data set forth herein have been carefully compiled by Chevron Phillips Chemical Company LP.
However, there is no warranty of any kind, either expressed or implied, applicable to its use, and the user assumes all risk and liability in connection therewith.

Kevin Ayres
Quality Control Supervisor

For CoA questions contact Customer Service Representative at +1-832-813-4782

Chevron Phillips Chemical Company LP

CoA Date: 08/30/2010

Certificate of Analysis

Shipped To: GSE LINING TECHNOLOGY LLC 19103 GUNDLE ROAD WESTFIELD TX 77090 USA	CPC Delivery #: 88118617 PO #: 03-063190 Weight: 185400 LB Ship Date: 08/30/2010 Package: BULK
Recipient: Phouangsavanh Fax:	Mode: Hopper Car Car #: NAHX610135 Seal No: 506774

Product: PE 7104 BULK

Lot Number: CAH811830

Property	Test Method	Value	Unit
Melt Index	ASTM D1238	0.35	g/10mi
Density	D1505 or D4883	0.919	g/cm3
Production date		20100828	

The data set forth herein have been carefully compiled by Chevron Phillips Chemical Company LP.
However, there is no warranty of any kind, either expressed or implied, applicable to its use, and the user assumes all risk and liability in connection therewith.

Kevin Ayres
Quality Control Supervisor

For CoA questions contact Customer Service Representative at +1-832-813-4782

Report Date
8/15/2011

Quality Assurance Laboratory Test Results

Job Name: Johnston County Area 1 Closure
Sales Order: 62244

Required Testing: ASTM D 3895 -- Standard Test Method for Oxidative Induction Time of Polyolefins by Differential Scanning Calorimetry

Custom Frequency: 1/Resin Lot

Custom Criteria: 140 Minutes

Product Code	Resin Lot Number	Test Results
LDT-030GE-BBB-B-00	CAH811610	PASS
LDT-030GE-BBB-B-00	CAH811830	PASS

Approved By:	Debra Gortmeiller
Date Approved:	September 13, 2010

The above stated data shall not be reproduced except in full, without the written approval of the laboratory.

GEOSYNTHETICS INVENTORY LOG
30 MIL LLDPE GEOMEMBRANE (TEXTURED)

Project Name: Johnston County C&DLF - Area 1 Closure
Project Number: JOHNSTON-09-5
Contractor: ES&J Enterprises
Geosynthetics Installer: Hallaton
Storage Area: West of Area 1
Inventory Monitor(s): BSH

Geosynthetic Material Type: 30 Mil Textured LLDPE Geomembrane
Geosynthetic Product Identification: GSE 30 Mil Ultraflex

Material		Material Dimensions		MQC Information?	CQA Conformance Sample No.	Remarks
Roll No.	Batch/Lot No.	Length (Feet)	Width (Feet)			
105154397	CAH811610	830	23	Y	10096-01-01	PASS
105154398	CAH811830	830	23	Y		
105154399	CAH811830	830	23	Y		
105154400	CAH811830	830	23	Y		
105154405	CAH811830	830	23	Y		
105154406	CAH811830	830	23	Y	10096-01-02	PASS
105154407	CAH811830	830	23	Y		
105154408	CAH811830	830	23	Y		
105154409	CAH811830	830	23	Y		
105154410	CAH811830	830	23	Y		
105154411	CAH811830	830	23	Y	10096-01-03	PASS
105154412	CAH811830	830	23	Y		
105154413	CAH811830	830	23	Y		
105154414	CAH811830	830	23	Y		
105154415	CAH811830	830	23	Y		
105154416	CAH811830	830	23	Y	10096-01-04	PASS
105154417	CAH811830	830	23	Y		
105154418	CAH811830	830	23	Y		
105154419	CAH811830	830	23	Y		
105154420	CAH811830	830	23	Y		
105154423	CAH811830	830	23	Y	10096-01-05	PASS
105154424	CAH811830	830	23	Y		
105154425	CAH811830	830	23	Y		
105154426	CAH811830	830	23	Y		
105154427	CAH811830	830	23	Y		
105154428	CAH811830	830	23	Y	10096-01-06	PASS
105154429	CAH811830	830	23	Y		
105154430	CAH811830	830	23	Y		
105154432	CAH811830	830	23	Y		
105154433	CAH811830	830	23	Y	10096-01-07	PASS
105154434	CAH811830	830	23	Y		

Totals:

Total Rolls: 31
Total Lots: 2
Total SF: 591,790

CONFORMANCE TEST RESULTS

geotechnics
INTEGRITY IN TESTING

CLIENT: Richardson Smith Gardner & Associates, Inc.
CLIENT PROJECT: JOHNSTON COUNTY LANDFILL
PROJECT NO.: L10096-01
LAB ID NO.: L10096-01-01
MATERIAL: 30 MIL GSE ULTRAFLEX
ROLL NO: 105154397

TEST	ASTM METHOD	UNITS	SPECIMEN NO. 1	2	3	4	5	AVE	STD
THICKNESS	D 5994	mils	30	31	32	29	32		
			31	30	32	32	30	**31.0**	1.22
DENSITY	D 1505	g/cc	0.9314	0.9310	0.9308			**0.9311**	0.0003
CARBON BLACK CONTENT	D 1603	%	2.46	2.50				**2.48**	0.029
CARBON BLACK DISPERSION	D 5596	CATEGORY	1	1	1	1	1		
			1	1	1	1	1		
TEAR RESISTANCE	D 1004	MD-lbs	28.4	23.1	21.3	25.7	26.2		
			26.9	22.9	25.6	25.7	23.6	**24.9**	2.15
		CD-lbs	27.4	27.8	22.7	26.4	26.6		
			25.4	24.7	21.5	19.1	25.5	**24.7**	2.79
TENSILE PROPERTIES	D 6693								
STRENGTH AT BREAK		MD-ppi	128	114	120	125	96	**117**	12.63
		CD-ppi	76	72	98	94	105	**89**	14.14
ELONGATION AT BREAK		MD%	666	621	594	633	504	**604**	61.39
Lo = 2.0"		CD%	429	445	554	488	567	**497**	62.36

CHECKED BY: J.O DATE: 9-23-10

\\GEOSERVER\Data Drive\Synthetics\2010 SYNTHETICS\RSGA - JOHNSTON COUNTY LANDFILL\[L10096-01-01 LLDPE JOHNSTON COUNTY L10096-01-01 9/23/2010

CONFORMANCE TEST RESULTS

geotechnics
INTEGRITY IN TESTING

CLIENT: Richardson Smith Gardner & Associates, Inc.
CLIENT PROJECT: JOHNSTON COUNTY LANDFILL
PROJECT NO.: L10096-01
LAB ID NO.: L10096-01-02
MATERIAL: 30 MIL GSE ULTRAFLEX
ROLL NO: 105154406

TEST	ASTM METHOD	UNITS	SPECIMEN NO. 1	2	3	4	5	AVE	STD
THICKNESS	D 5994	mils	31	30	32	30	31		
			31	33	31	31	31	**31.0**	0.74
DENSITY	D 1505	g/cc	0.9312	0.9310	0.9310			**0.9311**	0.0001
CARBON BLACK CONTENT	D 1603	%	2.50	2.45				**2.47**	0.037
CARBON BLACK DISPERSION	D 5596	CATEGORY	1	1	1	1	1		
			1	1	1	1	1		
TEAR RESISTANCE	D 1004	MD-lbs	26.5	25.5	25.5	27.4	25.9		
			26.2	24.4	24.8	25.4	25.1	**25.7**	0.87
		CD-lbs	21.5	21.3	25.8	26.9	23.9		
			24.2	26.1	25.4	25.3	25.3	**24.6**	1.88
TENSILE PROPERTIES	D 6693								
STRENGTH AT BREAK		MD-ppi	124	130	137	132	140	**133**	6.56
		CD-ppi	114	86	115	115	122	**111**	13.86
ELONGATION AT BREAK		MD%	620	646	680	632	660	**648**	23.51
Lo = 2.0"		CD%	616	476	615	585	604	**579**	59.02

CHECKED BY: J.d DATE: 9-23-10

\\GEOSERVER\Data Drive\Synthetics\2010 SYNTHETICS\RSGA - JOHNSTON COUNTY LANDFILL\[L10096-01-02 LLDPE JOHNSTON COUNTY L10096-01-02 9/23/2010

CONFORMANCE TEST RESULTS

geotechnics
INTEGRITY IN TESTING

CLIENT: Richardson Smith Gardner & Associates, Inc.
CLIENT PROJECT: JOHNSTON COUNTY LANDFILL
PROJECT NO.: L10096-01
LAB ID NO.: L10096-01-03
MATERIAL: 30 MIL GSE ULTRAFLEX
ROLL NO: 105154411

TEST	ASTM METHOD	UNITS	SPECIMEN NO. 1	2	3	4	5	AVE	STD
THICKNESS	D 5994	mils	31	31	32	31	27		
			30	28	31	28	31	**29.9**	1.70
DENSITY	D 1505	g/cc	0.9308	0.9306	0.9306			**0.9307**	0.0001
CARBON BLACK CONTENT	D 1603	%	2.43	2.41				**2.42**	0.013
CARBON BLACK DISPERSION	D 5596	CATEGORY	1	1	1	1	1		
			1	1	1	1	1		
TEAR RESISTANCE	D 1004	MD-lbs	24.1	24.9	22.8	25.7	24.5		
			26.8	27.7	24.7	25.5	24.2	**25.1**	1.41
		CD-lbs	21.4	23.8	27.1	25.5	24.0		
			22.5	23.7	23.9	26.6	23.9	**24.2**	1.74
TENSILE PROPERTIES	D 6693								
STRENGTH AT BREAK		MD-ppi	101	113	134	112	114	**115**	11.72
		CD-ppi	101	101	81	95	102	**96**	8.69
ELONGATION AT BREAK		MD%	503	593	670	572	575	**583**	59.69
Lo = 2.0"		CD%	573	550	470	550	540	**537**	39.15

CHECKED BY: J.O DATE: 9-23-10

\\GEOSERVER\Data Drive\Synthetics\2010 SYNTHETICS\RSGA - JOHNSTON COUNTY LANDFILL\[L10096-01-03 LLDPE JOHNSTON COUNTY L10096-01-03 9/23/2010

CONFORMANCE TEST RESULTS

geotechnics
INTEGRITY IN TESTING

CLIENT: Richardson Smith Gardner & Associates, Inc.
CLIENT PROJECT: JOHNSTON COUNTY LANDFILL
PROJECT NO.: L10096-01
LAB ID NO.: L10096-01-04
MATERIAL: 30 MIL GSE ULTRAFLEX
ROLL NO: 105154416

TEST	ASTM METHOD	UNITS	SPECIMEN NO. 1	2	3	4	5	AVE	STD
THICKNESS	D 5994	mils	31	31	33	31	32		
			32	32	32	32	32	**31.8**	0.49
DENSITY	D 1505	g/cc	0.9304	0.9304	0.9304			**0.9304**	0.0000
CARBON BLACK CONTENT	D 1603	%	2.28	2.35				**2.31**	0.050
CARBON BLACK DISPERSION	D 5596	CATEGORY	1	1	1	1	1		
			1	1	1	1	1		
TEAR RESISTANCE	D 1004	MD-lbs	27.4	26.6	25.0	27.4	28.0		
			27.2	28.3	27.3	28.4	28.6	**27.4**	1.06
		CD-lbs	30.3	28.3	26.5	28.5	23.5		
			27.2	24.6	27.6	28.1	23.8	**26.8**	2.23
TENSILE PROPERTIES	D 6693								
STRENGTH AT BREAK		MD-ppi	134	126	126	134	128	**130**	3.98
		CD-ppi	104	127	117	118	110	**115**	8.83
ELONGATION AT BREAK		MD%	626	581	570	631	587	**599**	27.67
Lo = 2.0"		CD%	512	617	566	547	545	**557**	38.57

CHECKED BY: J.O DATE: 9-23-10

\\GEOSERVER\Data Drive\Synthetics\2010 SYNTHETICS\RSGA - JOHNSTON COUNTY LANDFILL\[L10096-01-04 LLDPE JOHNSTON COUNTY L10096-01-04 9/23/2010

CONFORMANCE TEST RESULTS

geotechnics
INTEGRITY IN TESTING

CLIENT: Richardson Smith Gardner & Associates, Inc.
CLIENT PROJECT: JOHNSTON COUNTY LANDFILL
PROJECT NO.: L10096-01
LAB ID NO.: L10096-01-05
MATERIAL: 30 MIL GSE ULTRAFLEX
ROLL NO: 105154423

TEST	ASTM METHOD	UNITS	SPECIMEN NO. 1	2	3	4	5	AVE	STD
THICKNESS	D 5994	mils	30	32	30	29	28		
			32	30	30	30	31	**30.0**	1.04
DENSITY	D 1505	g/cc	0.9306	0.9304	0.9302			**0.9304**	0.0002
CARBON BLACK CONTENT	D 1603	%	2.12	2.16				**2.14**	0.030
CARBON BLACK DISPERSION	D 5596	CATEGORY	1	1	1	1	1		
			1	1	1	1	1		
TEAR RESISTANCE	D 1004	MD-lbs	25.5	26.3	24.7	24.4	26.5		
			23.3	22.7	25.1	27.5	25.8	**25.2**	1.47
		CD-lbs	22.7	26.3	23.6	22.1	21.4		
			23.0	25.3	22.0	25.8	21.9	**23.4**	1.78
TENSILE PROPERTIES	D 6693								
STRENGTH AT BREAK		MD-ppi	114	120	131	118	126	**122**	6.92
		CD-ppi	116	92	84	91	114	**99**	14.84
ELONGATION AT BREAK		MD%	575	597	667	607	636	**616**	35.79
Lo = 2.0"		CD%	586	507	478	502	598	**534**	54.06

CHECKED BY: J.O DATE: 9-23-10

\\GEOSERVER\Data Drive\Synthetics\2010 SYNTHETICS\RSGA - JOHNSTON COUNTY LANDFILL\[L10096-01-05 LLDPE JOHNSTON COUNTY L10096-01-05 9/23/2010

CONFORMANCE TEST RESULTS

Geotechnics
INTEGRITY IN TESTING

CLIENT: Richardson Smith Gardner & Associates, Inc.
CLIENT PROJECT: JOHNSTON COUNTY LANDFILL
PROJECT NO.: L10096-01
LAB ID NO.: L10096-01-06
MATERIAL: 30 MIL GSE ULTRAFLEX
ROLL NO: 105154428

TEST	ASTM METHOD	UNITS	SPECIMEN NO. 1	2	3	4	5	AVE	STD
THICKNESS	D 5994	mils	32	30	31	31	31		
			30	32	30	29	29	**30.3**	1.22
DENSITY	D 1505	g/cc	0.9302	0.9302	0.9302			**0.9302**	0.0000
CARBON BLACK CONTENT	D 1603	%	2.25	2.23				**2.24**	0.013
CARBON BLACK DISPERSION	D 5596	CATEGORY	1	1	1	1	1		
			1	1	1	1	1		
TEAR RESISTANCE	D 1004	MD-lbs	24.3	23.2	20.9	23.3	27.6		
			20.8	20.7	22.4	26.2	20.2	**23.0**	2.49
		CD-lbs	25.7	26.5	21.8	22.0	24.9		
			25.2	24.4	19.6	22.9	25.4	**23.8**	2.18
TENSILE PROPERTIES	D 6693								
STRENGTH AT BREAK		MD-ppi	138	113	139	105	132	**125**	15.45
		CD-ppi	108	107	104	79	96	**99**	11.89
ELONGATION AT BREAK		MD%	726	576	676	534	687	**640**	80.98
Lo = 2.0"		CD%	574	572	574	472	550	**548**	43.90

CHECKED BY: JLO DATE: 9-23-10

\\GEOSERVER\Data Drive\Synthetics\2010 SYNTHETICS\RSGA - JOHNSTON COUNTY LANDFILL\[L10096-01-06 LLDPE JOHNSTON COUNTY L10096-01-06 9/23/2010

CONFORMANCE TEST RESULTS

geotechnics
INTEGRITY IN TESTING

CLIENT: Richardson Smith Gardner & Associates, Inc.
CLIENT PROJECT: JOHNSTON COUNTY LANDFILL
PROJECT NO.: L10096-01
LAB ID NO.: L10096-01-07
MATERIAL: 30 MIL GSE ULTRAFLEX
ROLL NO: 105154433

TEST	ASTM METHOD	UNITS	SPECIMEN NO. 1	2	3	4	5	AVE	STD
THICKNESS	D 5994	mils	30 31	30 25	30 28	29 26	29 27	**28.4**	1.99
DENSITY	D 1505	g/cc	0.9304	0.9302	0.9302			**0.9303**	0.0001
CARBON BLACK CONTENT	D 1603	%	2.30	2.19				**2.24**	0.079
CARBON BLACK DISPERSION	D 5596	CATEGORY	1 1	1 1	1 1	1 1	1 1		
TEAR RESISTANCE	D 1004	MD-lbs	25.9 23.6	24.8 27.6	26.9 23.6	23.6 25.5	24.8 24.8	**25.1**	1.39
		CD-lbs	22.9 25.9	24.8 25.1	24.3 21.0	22.0 24.0	21.5 26.9	**23.8**	1.95
TENSILE PROPERTIES	D 6693								
STRENGTH AT BREAK		MD-ppi	107	107	110	136	123	**117**	12.79
		CD-ppi	121	89	106	95	84	**99**	14.89
ELONGATION AT BREAK Lo = 2.0"		MD%	562	562	557	667	615	**593**	47.90
		CD%	638	471	554	512	471	**529**	69.86

CHECKED BY: J.C DATE: 9-23-10

\\GEOSERVER\Data Drive\Synthetics\2010 SYNTHETICS\RSGA - JOHNSTON COUNTY LANDFILL\[L10096-01-07 LLDPE JOHNSTON COUNTY L10096-01-07 9/23/2010

HALLATON, INC.

1206 SPARKS RD., SPARKS, MD 21152
410-583-7700 Fax 410-583-7720

Geomembrane Field Trial Seam Log

Project No.: 0901-2008
Project Name: Johnston Co LF area 1 closure
Start Date: 5/26/2009
Project Location: Smithfield, NC
Page: 1 of 1

Material: LLDPE

40 mil Thickness

Project Seam Requirements

Fusion:		Extrusion:	
Peel:	50	Peel:	44
Shear:	60	Shear:	60

Sample #	Date	Time	Ambient Temp.	Welder ID		Wedge	Extruder	Seam Strength										Pass Fail	Tech ID	Remarks
								Peel (ppi) IN / OUT					Shear (ppi)							
				Machine	Operator	Temp/ Speed °F/fpm (or %max)	Barrel/ Preheat °F/°F	1	2	3	4	5	1	2	3	4	5			
1	5/26/2009	9:45	75	17	MR	850/700		65	64				66	65				P	ER	TX/TX
								66	64											
2	5/27/2009	8:00	75	17	MR	850/700		64	63				65	64				P	ER	TX/TX
								64	65											
3	5/27/2009	10:00	80	9	MM		500/350	61	60				64	65				P	ER	TX/TX
								62	62											
4	5/27/2009	1:10	85	9	MM		500/350	61	62				63	64				P	ER	TX/TX
								63	61											
5	5/27/2009	1:15	85	9	MR	850/700		62	64				65	66				P	ER	TX/TX
								63	63											
6	5/29/2009	1:00	85	17	MR	850/700		64	63				67	65				P	ER	TX/TX
								65	64											
7	5/30/2009	7:56	75	9	MM		500/350	66	66				70	69				P	ER	TX/TX
								68	67											
8	6/4/2009	7:40	70	17	MR	850/700		65	66				71	70				P	ER	TX/TX
								67	67											
9	6/4/2009	9:00	75	9	MM		500/350	64	64				68	69				P	ER	TX/TX
								65	63											

HALLATON, INC.

1206 SPARKS RD., SPARKS, MD 21152
410-583-7700 Fax 410-583-7720

Geomembrane Field Trial Seam Log

Project No.: 1043-16310
Project Name: Johnston Co
Start Date: 11/3/2010
Project Location: Smithfield, NC
Page: 1 of 4

Material: LLDPE

30 mil Thickness

Project Seam Requirements

Fusion:		Extrusion:	
Peel:	38	Peel:	34
Shear:	45	Shear:	45

Sample #	Date	Time	Ambient Temp.	Welder ID		Wedge	Extruder	Seam Strength										Pass Fail	Tech ID	Remarks
								Peel (ppi) IN / OUT					Shear (ppi)							
				Machine	Operator	Temp/ Speed °F/fpm (or %max)	Barrel/ Preheat °F/°F	1	2	3	4	5	1	2	3	4	5			
1	11/3/2010	8:00	56	M22	MR	860/750		65	69	64	70	61	64	61				F	FF	TX/TX
								61	65	66	66	60								
2	11/3/2010	8:28	56	M23	CS	800/700		65	66	65	63	65	60	59	62	61	58	P	FF	TX/TX
								62	63	61	65	61								
3	11/3/2010	8:30	56	M22	MR	860/750		66	54	58	57	59	65	59	63	64	59	P	FF	TX/TX
								59	65	59	63	61								
4	11/5/2010	8:09	59	X20	JV		400/450	68	64	67	67	64	69	72	72	70	69	P	FF	TX/TX
5	11/5/2010	8:59	59	M22	MR	860/650		75	67	63	68	62	69	73	76	72	63	P	FF	TX/TX
								71	67	63	63	63								
6	11/5/2010	2:50	64	X20	JV		400/450	65	68	64	67	63	72	72	70	73	68	P	FF	TX/TX
7	11/6/2010	7:40	56	M22	MR	860/700		61	62	67	63	60	64	64	65	66	64	P	FF	TX/TX
								54	59	62	60	65								
8	11/6/2010	9:55	56	M8	CS	860/700		38	41	32								F	FF	TX/TX
9	11/6/2010	10:17	56	M8	CS	800/700		67	62	64	71	63	67	64	63	64	66	P	FF	TX/TX
								67	63	60	61	63								
10	11/6/2010	1:41	54	M8	CS	860/750		59	61	61	65	64	64	62	62	61	62	P	FF	TX/TX
								58	66	60	61	62								
11	11/6/2010	1:30	66	M22	MR	860/700		61	65	59	64	61	62	69	65	67	64	P	FF	TX/TX
								65	61	63	60	65								
12	11/8/2010	7:43	48	M22	MR	860/680		74	70	76			76	76	65			P	FF	TX/TX
								70	73	75										
13	11/8/2010	7:50	48	M8	CS	860/800		67	69	66			65	69	70			P	FF	TX/TX
								64	62	65										
14	11/8/2010	7:25	64	M22	MR	860/700		56	57				57	54				P	FF	TX/TX
								55	55											

HALLATON, INC.

1206 SPARKS RD., SPARKS, MD 21152
410-583-7700 Fax 410-583-7720

Geomembrane Field Trial Seam Log

Project No.: 1043-16310
Project Name: Johnston Co
Start Date: 11/3/2010
Project Location: Smithfield, NC
Page: 2 of 4

Material: LLDPE

30 mil Thickness

Project Seam Requirements

Fusion:		Extrusion:	
Peel:	38	Peel:	34
Shear:	45	Shear:	45

Sample #	Date	Time	Ambient Temp.	Welder ID		Wedge	Extruder	Seam Strength										Pass Fail	Tech ID	Remarks
								Peel (ppi) IN / OUT					Shear (ppi)							
				Machine	Operator	Temp/ Speed °F/fpm (or %max)	Barrel/ Preheat °F/°F	1	2	3	4	5	1	2	3	4	5			
15	11/8/2010	1:30	64	M8	CS	860/900		50	55				62	57				P	FF	TX/TX
								57	61											
16	11/8/2010	3:14	65	X20	JV		400/500	64	60				67	66				P	FF	TX/TX
17	11/9/2010	7:15	57	X20	JV		400/500	58	61				71	67				P	FF	TX/TX
18	11/9/2010	7:30	57	X19	MR		250/500	51	53				60	63				P	FF	TX/TX
19	11/9/2010	1:40	60	X19	MR		230/500	53	52				58	55				P	FF	TX/TX
20	11/9/2010	1:44	60	X20	JV		400/500	53	52				61	59				P	FF	TX/TX
21	11/10/2010	8:00	57	X20	JV		400/500	60	54				59	59				P	FF	TX/TX
22	11/12/2010	7:22	34	M22	MR	860/700		64	63				67	67				P	FF	TX/TX
								67	64											
23	11/12/2010	8:04	43	M8	CS	860/800		58	70				66	63				P	FF	TX/TX
								67	65											
24	11/12/2010	10:20	55	M23	JO	860/700		52										F	FF	TX/TX
								57												
25	11/12/2010	11:00	55	M23	JO	850/700		59	58				61	63				P	FF	TX/TX
								59	59											
26	11/12/2010	1:34	60	M22	MR	860/700		59	59				62	60				P	FF	TX/TX
								57	56											
27	11/12/2010	1:36	60	M8	CS	850/800		53	54				59	59				P	FF	TX/TX
								52	56											
28	11/12/2010	1:40	60	M23	JO	850/700		58	58				60	56				P	FF	TX/TX
								56	57											

HALLATON, INC.

1206 SPARKS RD., SPARKS, MD 21152
410-583-7700 Fax 410-583-7720

Geomembrane Field Trial Seam Log

Project No.: 1043-16310
Project Name: Johnston Co
Start Date: 11/3/2010
Project Location: Smithfield, NC
Page: 3 of 4

Material: LLDPE

30 mil Thickness

Project Seam Requirements

Fusion:		Extrusion:	
Peel:	38	Peel:	34
Shear:	45	Shear:	45

Sample #	Date	Time	Ambient Temp.	Welder ID		Wedge	Extruder	Seam Strength										Pass Fail	Tech ID	Remarks
								Peel (ppi) IN / OUT					Shear (ppi)							
				Machine	Operator	Temp/ Speed °F/fpm (or %max)	Barrel/ Preheat °F/°F	1	2	3	4	5	1	2	3	4	5			
29	11/13/2010	7:50	46	X20	JV		400/500	53	60				63	69				P	FF	TX/TX
30	11/13/2010	11:20	58	X19	MR		250/500	51	55				55	56				P	FF	TX/TX
31	11/13/2010	11:20	68	X19	MR		500/250	51	55	56	52	51	55	56				P	GP	TX/TX
32	11/13/2010	1:23	70	X19	MR		500/250	55	56				57	59				P	GP	TX/TX
33	11/13/2010	1:37	70	X20	JV		500/400	55	57				62	57				P	GP	TX/TX
34	11/15/2010	7:34	55	M22	MR	860/700		70	64				71	61				P	FF	TX/TX
								68	70											
35	11/15/2010	7:55	56	M8	CS	850/750		69	74				77	69				P	FF	TX/TX
								67	65											
36	11/15/2010	10:47	65	X20	JV		500/400	56	52				56	59				P	FF	TX/TX
37	11/15/2010	1:48	75	X20	JV		400/500	59	54				54	57				P	FF	TX/TX
38	11/15/2010	1:50	75	M22	MR	860/750		51	57				55	53				P	FF	TX/TX
								51	54											
39	11/17/2010	10:02	70	X20	JV		400/500	54	56				60	52				P	FF	TX/TX
40	11/18/2010	10:00	70	X20	GP		300/500	52	54				63	60				P	FF	TX/TX
41	11/19/2010	7:45	59	M22	MR	860/700		79	73				80	79				P	FF	TX/TX
								83	79											
42	11/19/2010	8:50	62	M8	CS	850/750		66	63				69	71				P	FF	TX/TX
								64	56											

HALLATON, INC.

1206 SPARKS RD., SPARKS, MD 21152
410-583-7700 Fax 410-583-7720

Geomembrane Field Trial Seam Log

Project No.: 1043-16310
Project Name: Johnston Co
Start Date: 11/3/2010
Project Location: Smithfield, NC
Page: 4 of 4

Material: LLDPE

60 mil Thickness

Project Seam Requirements

	Fusion:	Extrusion:
Peel:	38	34
Shear:	45	45

Sample #	Date	Time	Ambient Temp.	Welder ID		Wedge	Extruder	Seam Strength										Pass Fail	Tech ID	Remarks
								Peel (ppi) IN / OUT					Shear (ppi)							
				Machine	Operator	Temp/ Speed °F/fpm (or %max)	Barrel/ Preheat °F/°F	1	2	3	4	5	1	2	3	4	5			
43	11/19/2010	1:32	70	M22	MR	860/750		61 61	59 61				61	62				P	FF	TX/TX
44	11/19/2010	1:35	70	M8	CS	850/800		65 58	61 63				57	61				P	FF	TX/TX
45	11/19/2010	4:00	68	M23	JO	850/700		60 57	60 57				60	60				P	FF	TX/TX
46	11/20/2010	7:46	47	X20	JV		400/500	52	60				67	63				P	FF	TX/TX
47	11/20/2010	11:00	69	X19	GP		500/300	57	56				57	62				P	FF	TX/TX
48	11/20/2010	10:45	69	M22	MR	860/700		56 58	57 62				66	66				P	FF	TX/TX
49	11/20/2010	1:45	70	X20	JV		350/500	51	54				57	56				P	FF	TX/TX

HALLATON, INC.

1206 SPARKS RD., SPARKS, MD 21152
410-583-7700 Fax 410-583-7720

Panel Placement Log

Project No.: 0901-2008
Project Name: Johnston Co LF area 1 closure
Project Start Date: 05/26/09
Project Location: Smithfield, NC
Page: 1 of 1

Material: LLDPE
Thickness: 40 mil

Date Deployed	Panel No.	Time Deployed	Panel Location	Roll No.	Width (FT)	Length (FT)	Area (SQ FT)
5/26/2009	P-1	10:00	East Slope	104144261	22.5	284	6390
5/26/2009	P-2	10:10	East Slope	104144261	22.5	318	7155
5/26/2009	P-3	11:25	East Slope	104144244	11	154	1694
5/26/2009	P-4	11:35	East Slope	104144244	11	154	1694
5/27/2009	P-5	8:00	Top	104144249	22.5	700	15750
5/27/2009	P-6	8:20	Top	104144266	22.5	700	15750
5/27/2009	P-7	9:30	Top	104144244	11	350	3850
5/27/2009	P-8	9:35	Top	104144244	11	350	3850
5/27/2009	P-9	10:00	Top	104144244	10	40	400
5/27/2009	P-10	10:05	Top	104144244	10	40	400
5/27/2009	P-11	1:20	West Slope	104144265	22.5	204	4590
5/27/2009	P-12	1:30	West Slope	104144265	22.5	204	4590
5/27/2009	P-13	1:40	West Slope	104144265	11	104	1144
5/27/2009	P-14	1:45	West Slope	104144265	11	91	1001
5/27/2009	P-15	3:20	West Slope	104144265	22.5	160	3600
5/27/2009	P-16	3:30	West Slope	104144274	22.5	160	3600
5/27/2009	P-17	3:40	West Slope	104144274	11	82	902
5/27/2009	P-18	3:50	West Slope	104144274	11	82	902
5/29/2009	P-19	1:22	West Slope	104144274	22.5	125	2812.5
5/29/2009	P-20	1:27	West Slope	104144274	22.5	129	2902.5
5/29/2009	P-21	1:40	West Slope	104144274	22.5	105	2362.5
5/29/2009	P-22	1:46	West Slope	104144274	19	72	1368
5/29/2009	P-23	1:57	West Slope	104144244	18	50	900
5/29/2009	P-24	2:00	West Slope	104144244	5	36	180
6/4/2009	P-25	7:50	West Slope	104144244	22.5	83	1867.5
6/4/2009	P-26	8:00	West Slope	104144252	22.5	81	1822.5
6/4/2009	P-27	8:05	West Slope	104144252	22.5	97	2182.5
6/4/2009	P-28	8:10	West Slope	104144252	22.5	85	1912.5
							0
							0
							0
							0
							0
							0
							0
							0
							0
							0
							0
							0
							0
							0
							0
							0
							0
							0
							0
							0
							0
							0
							0
							0
					Total This Page		95572.5

HALLATON, INC.

1206 SPARKS RD., SPARKS, MD 21152
410-583-7700 Fax 410-583-7720

Panel Placement Log

Project No.: 1043-16310
Project Name: Johnston Co.
Project Start Date: 11/03/10
Project Location: Smithfield, NC
Page: 1 of 3

Material: LLDPE
Thickness: 30 mil

Date Deployed	Panel No.	Time Deployed	Panel Location	Roll No.	Width (FT)	Length (FT)	Area (SQ FT)
11/3/2010	1	9:03	Slope East to West	105154398	22.5	288	6480
11/3/2010	2	9:17	Slope East to West	105154398	22.5	269	6052.5
11/3/2010	3	9:24	Slope East to West	105154398	22.5	252	5670
11/3/2010	4	9:40	Slope East to West	105154423	22.5	247	5557.5
11/3/2010	5	9:59	Slope East to West	105154423	22.5	230	5175
11/3/2010	6	10:11	Slope East to West	105154423	22.5	216	4860
11/3/2010	7	10:30	East	105154423	22.5	108	2430
11/3/2010	8	10:45	West	105154397	22.5	100	2250
11/3/2010	9	10:59	Slope East to West	105154397	22.5	190	4275
11/3/2010	10	11:15	Slope East to West	105154397	22.5	178	4005
11/6/2010	11	7:40	Slope East to West	105154397	22.5	160	3600
11/6/2010	12	7:50	East	105154397	22.5	121	2722.5
11/6/2010	13	8:00	West	105154412	22.5	29	652.5
11/6/2010	14	8:05	Slope East to West	105154412	22.5	137	3082.5
11/6/2010	15	8:15	Slope East to West	105154412	22.5	128	2880
11/6/2010	16	8:20	Slope East to West	105154412	22.5	115	2587.5
11/6/2010	17	8:25	Slope East to West	105154412	22.5	101	2272.5
11/6/2010	18	8:33	Slope East to West	105154412	22.5	80	1800
11/6/2010	19	8:39	Slope East to West	105154412	22.5	55	1237.5
11/6/2010	20	8:45	Floor South	105154412	14	225	3150
11/6/2010	21	8:46	Floor East	105154412	9	13	117
11/6/2010	22	10:07	Slope West to East	105154423	22.5	180	4050
11/6/2010	23	10:20	Slope West to East	105154423	22.5	172	3870
11/6/2010	24	10:30	Slope West to East	105154423	22.5	161	3622.5
11/6/2010	25	10:40	Slope West to East	105154423	22.5	148	3330
11/6/2010	26	10:45	West	105154423	22.5	124	2790
11/6/2010	27	10:57	Slope West to East	105154434	22.5	10	225
11/6/2010	28	11:04	Slope West to East	105154434	22.5	93	2092.5
11/6/2010	29	11:07	East	105154434	10	12	120
11/6/2010	30	11:10	Slope West to East	105154434	22.5	62	1395
11/6/2010	31	11:20	Floor West	105154434	18	19	342
11/6/2010	32	1:55	Slope West to East	105154434	22.5	192	4320
11/6/2010	33	2:08	Slope West to East	105154434	22.5	199	4477.5
11/6/2010	34	2:15	West	105154434	22.5	79	1777.5
11/6/2010	35	2:35	East	105154417	22.5	136	3060
11/6/2010	36	3:06	Slope West to East	105154417	22.5	223	5017.5
11/6/2010	37	3:12	Slope West to East	105154417	22.5	230	5175
11/6/2010	38	3:22	West	105154417	22.5	190	4275
11/6/2010	39	3:40	East	105154412	22.5	51	1147.5
11/8/2010	40	7:15	Slope West to East	105154429	22.5	257	5782.5
11/8/2010	41	7:25	Slope West to East	105154429	22.5	265	5962.5
11/8/2010	42	7:45	Slope West to East	105154429	22.5	280	6300
11/8/2010	43	8:17	Slope West to East	105154410	22.5	287	6457.5
11/8/2010	44	8:42	Slope West to East	105154410	22.5	294	6615
11/8/2010	45	8:50	West	105154410	22.5	219	4927.5
11/8/2010	46	9:04	East	105154411	22.5	80	1800
11/8/2010	47	9:14	East to West	105154411	22.5	306	6885
11/8/2010	48	10:12	East to West	105154411	22.5	303	6817.5
					Total This Page		173491.5

HALLATON, INC.

1206 SPARKS RD., SPARKS, MD 21152
410-583-7700 Fax 410-583-7720

Panel Placement Log

Project No.: 1043-16310
Project Name: Johnston Co.
Project Start Date: 11/03/10
Project Location: Smithfield, NC
Page: 2 of 3

Material: LLDPE
Thickness: 30 mil

Date Deployed	Panel No.	Time Deployed	Panel Location	Roll No.	Width (FT)	Length (FT)	Area (SQ FT)
11/8/2010	49	10:16	West	105154411	22.5	113	2542.5
11/8/2010	50	10:33	East	105154419	22.5	171	3847.5
11/8/2010	51	10:42	East	105154419	13	22	286
11/8/2010	52	11:19	West	105154419	22.5	229	5152.5
11/8/2010	53	11:30	West	105154419	22.5	200	4500
11/8/2010	54	1:45	West	105154419	22.5	157	3532.5
11/8/2010	55	1:50	East	105154419	9	11	99
11/8/2010	56	2:00	West	105154415	22.5	119	2677.5
11/8/2010	57	2:08	West	105154415	22.5	79	1777.5
11/8/2010	58	2:15	West	105154415	22.5	34	765
11/8/2010	59	2:30	West	105154415	3	6	18
11/12/2010	60	7:14	Slope West	105154415	22.5	297	6682.5
11/12/2010	61	7:25	West	105154415	22.5	212	4770
11/12/2010	62	7:35	East	105154409	22.5	80	1800
11/12/2010	63	7:40	Slope West	105154409	22.5	292	6570
11/12/2010	64	7:45	East to West	105154409	22.5	289	6502.5
11/12/2010	65	7:50	West	105154409	22.5	130	2925
11/12/2010	66	8:00	East	105154405	22.5	161	3622.5
11/12/2010	67	8:05	East to West	105154405	22.5	291	6547.5
11/12/2010	68	8:35	East to West	105154405	22.5	293	6592.5
11/12/2010	69	9:02	East to West	105154414	22.5	291	6547.5
11/12/2010	70	9:12	East to West	105154414	22.5	291	6547.5
11/12/2010	71	10:02	West	10514414	22.5	215	4837.5
11/12/2010	72	10:27	East	105154408	22.5	77	1732.5
11/12/2010	73	10:57	East to West	105154408	22.5	288	6480
11/12/2010	74	11:18	East to West	105154408	22.5	289	6502.5
11/12/2010	75	11:33	West	105154408	22.5	132	2970
11/12/2010	76	11:46	East	105154399	22.5	156	3510
11/12/2010	77	1:39	East to West	105154399	22.5	289	6502.5
11/12/2010	78	2:02	East to West	105154399	22.5	284	6390
11/12/2010	79	2:07	West	105154399	22.5	65	1462.5
11/12/2010	80	2:25	East	105154424	22.5	223	5017.5
11/12/2010	81	2:39	East to West	105154424	22.5	285	6412.5
11/12/2010	82	2:53	East to West	105154424	22.5	284	6390
11/12/2010	83	3:15	East to West	105154420	22.5	281	6322.5
11/12/2010	84	3:25	East to West	105154420	22.5	281	6322.5
11/12/2010	85	3:53	East	105154420	22.5	234	5265
11/12/2010	86	3:57	East	105154427	22.5	51	1147.5
11/12/2010	87	4:13	East to West	105154427	22.5	283	6367.5
11/15/2010	88	7:25	East to West	105154427	22.5	282	6345
11/15/2010	89	7:30	West	105154427	22.5	174	3915
11/15/2010	90	7:40	East	105154400	22.5	108	2430
11/15/2010	91	7:47	East to West	105154400	22.5	279	6277.5
11/15/2010	92	8:00	East to West	105154400	22.5	279	6277.5
11/15/2010	93	8:07	West	105154400	22.5	114	2565
11/15/2010	94	8:40	East	105154413	22.5	161	3622.5
11/15/2010	95	8:51	East to West	105154413	22.5	275	6187.5
11/15/2010	96	9:13	East to West	105154413	22.5	275	6187.5
					Total This Page		211745.5

HALLATON, INC.

1206 SPARKS RD., SPARKS, MD 21152
410-583-7700 Fax 410-583-7720

Panel Placement Log

Project No.: 1043-16310
Project Name: Johnston Co.
Project Start Date: 11/03/10
Project Location: Smithfield, NC
Page: 3 of 3

Material: LLDPE
Thickness: 30 mil

Date Deployed	Panel No.	Time Deployed	Panel Location	Roll No.	Width (FT)	Length (FT)	Area (SQ FT)
11/15/2010	97	9:21	West	105154413	22.5	71	1597.5
11/15/2010	98	9:38	East	105154426	22.5	201	4522.5
11/15/2010	99	9:51	East to West	105154426	22.5	272	6120
11/15/2010	100	10:00	East to West	105154426	22.5	270	6075
11/19/2010	101	10:07	East to West	105154407	22.5	267	6007.5
11/19/2010	102	10:13	East to West	105154407	22.5	264	5940
11/19/2010	103	10:24	East to West	105154407	22.5	260	5850
11/19/2010	104	10:45	East to West	105154418	22.5	255	5737.5
11/19/2010	105	11:00	East to West	105154418	22.5	252	5670
11/19/2010	106	11:10	East to West	105154418	22.5	249	5602.5
11/19/2010	107	1:27	West	105154418	22.5	34	765
11/19/2010	108	1:32	East	105154432	22.5	213	4792.5
11/19/2010	109	1:45	East to West	105154432	22.5	242	5445
11/19/2010	110	1:50	East to West	105154432	22.5	236	5310
11/19/2010	111	1:58	West	105154432	22.5	90	2025
11/19/2010	112	2:10	East	105154430	22.5	141	3172.5
11/19/2010	113	2:28	West	105154430	22.5	155	3487.5
11/19/2010	114	2:35	East	105154430	13	50	650
11/19/2010	115	2:40	West to East	105154430	22.5	201	4522.5
11/19/2010	116	2:50	West to East	105154430	22.5	194	4365
11/19/2010	117	2:55	East	105154430	13	23	299
11/19/2010	118	3:04	West to East	105154433	22.5	189	4252.5
11/19/2010	119	3:09	West to East	105154433	22.5	184	4140
11/19/2010	120	3:14	West to East	105154433	22.5	180	4050
11/19/2010	121	3:18	West to East	105154433	22.5	177	3982.5
11/19/2010	122	3:24	East	105154433	22.5	60	1350
11/19/2010	123	3:36	East	105154416	22.5	114	2565
11/19/2010	124	3:38	West to East	105154416	22.5	169	3802.5
11/19/2010	125	3:51	North	105154416	22.5	118	2655
11/19/2010	126	4:01	North	105154416	22.5	98	2205
11/19/2010	127	4:07	North	105154416	22.5	74	1665
11/19/2010	128	4:10	North	105154416	22.5	50	1125
11/19/2010	129	4:17	North	105154416	22.5	24	540
11/19/2010	130	4:19	East	105154416	6	7	42
11/19/2010	131	4:25	North	105154416	22.5	120	2700
11/19/2010	132	4:31	South	105154416	10	10	100
11/19/2010	133	3:37	South to North	105154406	22.5	107	2407.5
11/19/2010	134	4:40	South to North	105154406	22.5	94	2115
11/19/2010	135	4:45	South to North	105154406	22.5	85	1912.5
11/19/2010	136	4:47	South to North	105154406	22.5	73	1642.5
11/19/2010	137	5:00	South to North	105154406	19	49	931
					Total This Page		132139.5

HALLATON, INC.

1206 SPARKS RD., SPARKS, MD 21152
410-583-7700 Fax 410-583-7720

Seaming and Non Destructive Test Log

Project No.: 0901-2008
Project Name: Johnston Co LF area 1 closure
Weld Date: 5/26/2009
Project Location: Smithfield, NC
Page: 1 of 1

LLDPE
40 mil.

SEAM # (P#/P#)	WELD TIME	TECH ID	Machine ID	Machine Temp	Machine Speed or Preheat	Start Point	End Point	Seam Length (Feet)	Air Pressure Test					Vac Test Tech	Test Date	Pass / Fail
									PSI		Time		Tech			
									Start	Finish	Start	Finish				
P-1/2	10:19	MR	17	800	70%	BOS	235'> BOS	235	30	29	1:41	1:46	FF	ML	5/28/2009	P
P-1/2	10:35	MR	17	800	70%	15'> BOS	BOS	15	30	28	7:07	7:12	FF	ML	5/28/2009	P
P-1/2	10:39	MR	17	800	70%	19'> BOS	EOS	19	30	29	7:15	7:20	FF	ML	5/28/2009	P
P-3/4	11:40	MR	17	800	70%	BOS	EOS	11	30	29	1:51	1:56	FF	ML	5/28/2009	P
P-2/3	11:39	MR	17	800	70%	BOS	EOS	154	30	30	1:46	1:51	FF	ML	5/28/2009	P
P-2/4	11:50	MR	17	800	70%	BOS	EOS	154	30	29	2:06	2:11	FF	ML	5/28/2009	P
								588								

HALLATON, INC.

1206 SPARKS RD., SPARKS, MD 21152
410-583-7700 Fax 410-583-7720

Seaming and Non Destructive Test Log

Project No.: 0901-2008
Project Name: Johnston Co LF area 1 closure
Weld Date: 5/27/2009
Project Location: Smithfield, NC
Page: 1 of 1

LLDPE

40 mil.

SEAM # (P#/P#)	WELD TIME	TECH ID	Machine ID	Machine Temp	Machine Speed or Preheat	Start Point	End Point	Seam Length (Feet)	Air Pressure Test					Vac Test Tech	Test Date	Pass / Fail
									PSI		Time		Tech			
									Start	Finish	Start	Finish				
P-5/6	8:28	MR	17	800	70%	BOS	555'> BOS	555	30	29	10:00	10:05	FF	ML	5/28/2009	P
P-5/6	8:53	MR	17	800	70%	145'> BOS	EOS	145	30	30	10:16	10:21	FF	ML	5/28/2009	P
P-2/5	1:06	MR	17	800	70%	BOS	EOS	11	30	30	1:47	1:52	FF	ML	5/28/2009	P
P-2/6	1:08	MR	17	800	70%	BOS	EOS	22.5	30	30	1:53	1:58	FF	ML	5/28/2009	P
P-1/5	1:04	MR	17	800	70%	BOS	EOS	22.5	30	30	1:45	1:50	FF	ML	5/28/2009	P
P-5/9	1:00	MR	17	800	70%	BOS	EOS	40	30	30	1:15	1:20	FF	ML	5/28/2009	P
P-9/10	11:37	MR	17	800	70%	BOS	EOS	15	30	30	1:37	1:42	FF	ML	5/28/2009	P
P-1/10	11:44	MR	17	800	70%	BOS	EOS	40	30	30	1:40	1:45	FF	ML	5/28/2009	P
P-6/7	10:49	MR	17	800	70%	BOS	EOS	350	30	29	2:06	2:11	FF	ML	5/28/2009	P
P-7/8	9:37	MR	17	800	70%	BOS	EOS	11	30	30	3:05	3:10	FF	ML	5/28/2009	P
P-6/8	9:50	MR	17	800	70%	BOS	EOS	350	30	30	3:00	3:05	FF	ML	5/28/2009	P
P-5/11	3:25	MR	17	800	70%	BOS	15'> BOS	15	31	31	4:20	4:25	FF	ML	5/28/2009	P
P-5/11	3:26	MR	17	800	70%	BOS	7'> EOS	7	30	29	4:21	4:26	FF	ML	5/28/2009	P
P-6/12	3:15	MR	17	800	70%	BOS	EOS	22.5	31	30	4:13	4:18	FF	ML	5/28/2009	P
P-8/12	3:12	MR	17	800	70%	BOS	EOS	10	30	29	4:17	4:22	FF	ML	5/28/2009	P
P-11/12	1:45	MR	17	800	70%	BOS	EOS	202	30	30	4:57	5:02	FF	ML	5/28/2009	P
P-12/14	2:20	MR	17	800	70%	BOS	54'> BOS	54	30	28	5:18	5:23	FF	ML	5/28/2009	P
P-12/14	2:25	MR	17	800	70%	BOS	37'> EOS	37	30	28	5:13	5:18	FF	ML	5/28/2009	P
P-13/14	2:00	MR	17	800	70%	BOS	EOS	11	30	30	5:15	5:20	FF	ML	5/28/2009	P
P-12/13	2:30	MR	17	800	70%	BOS	EOS	104	30	30	4:43	4:48	FF	ML	5/28/2009	P
P-8/13	3:10	MR	17	800	70%	BOS	EOS	11	30	29	4:29	4:34	FF	ML	5/28/2009	P
P-11/15	3:33	MR	17	800	70%	BOS	EOS	22.5	30	29	5:33	5:38	FF	ML	5/28/2009	P
P-12/16	3:35	MR	17	800	70%	BOS	EOS	22.5	30	29	5:31	5:36	FF	ML	5/28/2009	P
P-14/17	4:44	MR	17	800	70%	BOS	EOS	11	30	28	5:23	5:28	FF	ML	5/28/2009	P
P-15/16	3:40	MR	17	800	70%	BOS	72'> BOS	72	30	29	5:38	5:43	FF	ML	5/28/2009	P
P-15/16	3:48	MR	17	800	70%	BOS	88'> EOS	88	30	29	5:43	5:48	FF	ML	5/28/2009	P
P-16/18	4:09	MR	17	800	70%	BOS	EOS	82	30	29	5:50	5:55	FF	ML	5/28/2009	P
P-17/18	4:03	MR	17	800	70%	BOS	EOS	11	30	28	5:52	5:57	FF	ML	5/28/2009	P
P-16/17	4:20	MR	17	800	70%	BOS	EOS	82	30	30	5:28	5:33	FF	ML	5/28/2009	P
								2426.5								

HALLATON, INC.

1206 SPARKS RD., SPARKS, MD 21152
410-583-7700 Fax 410-583-7720

Seaming and Non Destructive Test Log

Project No.: 0901-2008
Project Name: Johnston Co LF area 1 closure
Weld Date: 5/29/2009
Project Location: Smithfield, NC
Page: 1 of 1

LLPDE

40 mil.

SEAM # (P#/P#)	WELD TIME	TECH ID	Machine ID	Machine Temp	Machine Speed or Preheat	Start Point	End Point	Seam Length (Feet)	Air Pressure Test					Vac Test Tech	Test Date	Pass / Fail
									PSI		Time		Tech			
									Start	Finish	Start	Finish				
P-19/23	2:19	MR	17	850	70%	BOS	EOS	45	30	30	2:30	2:35	FF	JL	5/29/2009	P
P-19/20	2:03	MR	17	850	70%	BOS	EOS	125	30	30	2:40	2:45	FF	JL	5/29/2009	P
P-18/19	3:17	MR	17	850	70%	BOS	EOS	7	30	27	7:41	7:46	FF	JL	5/29/2009	P
P-16/19	3:18	MR	17	850	70%	BOS	EOS	22.5	30	27	7:46	7:51	FF	JL	5/29/2009	P
P-15/23	3:21	MR	17	850	70%	BOS	EOS	22.5	30	29	7:52	7:57	FF	JL	5/29/2009	P
P-23/24	2:15	MR	17	850	70%	BOS	EOS	5	30	29	8:06	8:11	FF	JL	5/29/2009	P
P-19/24	2:25	MR	17	850	70%	BOS	EOS	36	30	28	8:02	8:07	FF	JL	5/29/2009	P
P-20/21	2:29	MR	17	850	70%	BOS	EOS	107	30	29	8:15	8:20	FF	JL	5/29/2009	P
P-21/22	3:02	MR	17	850	70%	BOS	EOS	70	30	28	8:22	8:27	FF	JL	5/29/2009	P
								440								

HALLATON, INC.

1206 SPARKS RD., SPARKS, MD 21152
410-583-7700 Fax 410-583-7720

Seaming and Non Destructive Test Log

Project No.: 0901-2008
Project Name: Johnston Co LF area 1 closure
Weld Date: 6/4/2009
Project Location: Smithfield, NC
Page: 1 of 1

LLDPE

40 mil.

SEAM # (P#/P#)	WELD TIME	TECH ID	Machine ID	Machine Temp	Machine Speed or Preheat	Start Point	End Point	Seam Length (Feet)	Air Pressure Test					Vac Test Tech	Test Date	Pass / Fail
									PSI		Time		Tech			
									Start	Finish	Start	Finish				
P-225/26	8:10	MR	17	850	70%	BOS	EOS	81	31	30	8:30	8:35	FF	JL	6/4/2009	P
P-26/27	8:17	MR	17	850	70%	BOS	EOS	97	30	30	8:40	8:45	FF	JL	6/4/2009	P
P-27/28	8:30	MR	17	850	70%	BOS	22'> BOS	22	30	30	9:02	9:07	FF	JL	6/4/2009	P
P-27/28	8:34	MR	17	850	70%	BOS	25'> BOS	25	30	29	9:05	9:10	FF	JL	6/4/2009	P
P-27/28	8:40	MR	17	850	70%	BOS	50'> EOS	50	30	30	9:08	9:13	FF	JL	6/4/2009	P
P-22/28	9:12	MR	17	850	70%	BOS	EOS	22.5	30	30	9:16	9:21	FF	JL	6/4/2009	P
P-21/27	9:14	MR	17	850	70%	BOS	EOS	22.5	30	30	9:20	9:25	FF	JL	6/4/2009	P
P-20/26	8:55	MR	17	850	70%	BOS	EOS	22.5	30	30	9:26	9:31	FF	JL	6/4/2009	P
P-19/25	8:52	MR	17	850	70%	BOS	EOS	22.5	30	30	9:33	9:38	FF	JL	6/4/2009	P
								365								

HALLATON, INC.

1206 SPARKS RD., SPARKS, MD 21152
410-583-7700 Fax 410-583-7720

Seaming and Non Destructive Test Log

Project No.: 1043/16310
Project Name: Johnston Co.
Weld Date: 11/3/2010
Project Location: Smithfield, NC
Page: 1 of 1

LLDPE

30 mil.

SEAM # (P#/P#)	WELD TIME	TECH ID	Machine ID	Machine Temp	Machine Speed or Preheat	Start Point	End Point	Seam Length (Feet)	Air Pressure Test					Vac Test Tech	Test Date	Pass / Fail
									PSI		Time		Tech			
									Start	Finish	Start	Finish				
P-1/2	9:23	MR	M22	860	750	BOS	EOS	275	30	30	7:45	7:50	CS		11/5/2010	P
P-2/3	9:40	CS	M23	800	700	BOS	EOS	250	30	30	7:48	7:53	CS		11/5/2010	P
P-3/4	10:00	MR	M22	860	750	BOS	EOS	249	30	30	7:56	8:01	CS		11/5/2010	P
P-4/5	10:13	CS	M23	800	700	BOS	EOS	234	30	30	8:00	8:05	CS		11/5/2010	P
P-5/6	10:37	MR	M22	860	750	BOS	EOS	220	30	30	8:08	8:13	CS		11/5/2010	P
P-6/7	11:10	CS	M23	800	700	BOS	EOS	91	30	30	8:16	8:21	CS		11/5/2010	P
P-7/9	11:15	MR	M22	860	750	4'> BOS	50'> BOS	50	30	29	8:26	8:31	JR		11/5/2010	P
P-7/9	11:20	MR	M22	860	750	54'> BOS	EOS	64	30	30	9:05	9:10	JR		11/5/2010	P
P-9/10	11:36	CS	M23	800	700	BOS	33'> BOS	33	30	28	8:30	8:35	JR		11/5/2010	P
P-9/10	11:39	CS	M23	800	700	33'> BOS	EOS	149	30	30	8:48	8:53	JR		11/5/2010	P
P-7/8	11:04	CS	M23	800	700	BOS	18'> BOS	18	30	30	9:12	9:17	JR		11/5/2010	P
P-7/8	11:06	CS	M23	800	700	18'> BOS	EOS	13	30	28	9:04	9:09	JR		11/5/2010	P
P-6/8	11:28	MR	M22	860	750	BOS	EOS	79	30	29	9:07	9:12	JR		11/5/2010	P
P-8/9	11:19	CS	M23	800	700	BOS	EOS	117	30	28	9:19	9:24	JR		11/5/2010	P
P-2/EX-1	9:40	CS	M23	800	700	BOS	EOS	9	30	30	2:46	2:51	CS		11/5/2010	P
P-3/EX-1	9:37	CS	M23	800	700	BOS	EOS	13	30	30	2:45	2:50	CS		11/5/2010	P
								1864								

Johnston Co. - Full Field QC Complete

HALLATON, INC.

1206 SPARKS RD., SPARKS, MD 21152
410-583-7700 Fax 410-583-7720

Seaming and Non Destructive Test Log

Project No.: 1043/16310
Project Name: Johnston Co.
Weld Date: 11/5/2010
Project Location: Smithfield, NC
Page: 1 of

LLDPE

30 mil.

SEAM # (P#/P#)	WELD TIME	TECH ID	Machine ID	Machine Temp	Machine Speed or Preheat	Start Point	End Point	Seam Length (Feet)	Air Pressure Test					Vac Test Tech	Test Date	Pass / Fail
									PSI		Time		Tech			
									Start	Finish	Start	Finish				
P-1/EL-1	9:27	MR	M22	860	650	BOS	30'> BOS	30	30	28	10:45	10:50	JR		11/5/2010	P
P-1/EL-1	9:30	MR	M22	860	650	30'> BOS	106'> BOS	76	30	28	10:51	10:56	JR		11/5/2010	P
P-1/EL-1	9:41	MR	M22	860	650	106'> BOS	118'> BOS	12	30	30	10:57	11:02	JR		11/5/2010	P
P-1/EL-1	9:42	MR	M22	860	650	118'> BOS	EOS	9	30	29	11:06	11:11	JR		11/5/2010	P
P-1/E-2	10:03	MR	M22	860	650	BOS	73'> BOS	73	30	30	11:12	11:17	JR		11/5/2010	P
P-1/E-2	10:14	MR	M22	860	650	73'> BOS	EOS	81	30	28	11:16	11:21	JR		11/5/2010	P
P-2/EX-2	4:00	JV	X20	400	450	BOS	EOS	11	EXTRUDED					JV	11/5/2010	P
P-3/EX-1	4:08	JV	X20	400	450	BOS	EOS	27	EXTRUDED					JV	11/5/2010	P
								319								

HALLATON, INC.

1206 SPARKS RD., SPARKS, MD 21152
410-583-7700 Fax 410-583-7720

Seaming and Non Destructive Test Log

Project No.: 1043/16310
Project Name: Johnston Co.
Weld Date: 11/6/2010
Project Location: Smithfield, NC
Page: 1 of 3

LLDPE

30 mil.

SEAM # (P#/P#)	WELD TIME	TECH ID	Machine ID	Machine Temp	Machine Speed or Preheat	Start Point	End Point	Seam Length (Feet)	Air Pressure Test PSI Start	Air Pressure Test PSI Finish	Air Pressure Test Time Start	Air Pressure Test Time Finish	Tech	Vac Test Tech	Test Date	Pass / Fail
P-10/22	4:18	MR	M22	860	750	BOS	EOS	19	30	29	3:30	3:35	JR		11/9/2010	P
P-10/23	4:20	MR	M22	860	750	BOS	EOS	6	30	30	3:32	3:37	JR		11/9/2010	P
P-11/23	4:20	MR	M22	860	750	BOS	EOS	15	30	30	3:33	3:38	JR		11/9/2010	P
P-11/24	4:22	MR	M22	860	750	BOS	EOS	8	30	26	3:47	3:52	JR		11/9/2010	P
P-10/11	2:00	MR	M22	860	750	BOS	36'> BOS	36	15	15	4:20	4:25	JR		11/9/2010	P
P-10/11	2:03	MR	M22	860	750	36'> BOS	48'> BOS	12	30	28	4:19	4:24	JR		11/9/2010	P
P-10/11	2:04	MR	M22	860	750	48'> BOS	60'> BOS	12	30	26	4:11	4:16	JR		11/9/2010	P
P-10/11	2:06	MR	M22	860	750	60'> BOS	81'> BOS	21	30	26	4:07	4:12	JR		11/9/2010	P
P-10/11	2:08	MR	M22	860	750	88'> BOS	102'> BOS	14	30	26	3:52	3:57	JR		11/9/2010	P
P-10/11	2:10	MR	M22	860	750	108'> BOS	EOS	52	30	26	3:49	3:54	JR		11/9/2010	P
P-11/13	8:34	MR	M22	860	750	BOS	EOS	45	15	15	4:34	4:39	JR		11/9/2010	P
P-11/12	8:20	MR	M22	860	750	BOS	EOS	108	15	15	4:35	4:40	JR		11/9/2010	P
P-12/13	8:06	MR	M22	860	750	BOS	EOS	23	15	15	4:56	5:01	JR		11/9/2010	P
P-13/24	4:22	MR	M22	860	750	BOS	10'> BOS	10	15	15	5:08	5:13	JR		11/9/2010	P
P-13/25	4:23	MR	M22	860	750	BOS	EOS	12	15	15	5:08	5:13	JR		11/9/2010	P
P-13/14	9:02	MR	M22	860	750	BOS	EOS	10	15	15	5:24	5:29	JR		11/9/2010	P
P-12/14	8:45	MR	M22	860	750	BOS	EOS	129	15	14	5:25	5:30	JR		11/10/2010	P
P-14/15	9:10	MR	M22	860	750	BOS	EOS	132	30	29	7:16	7:21	CS		11/10/2010	P
P-15/16	9:33	MR	M22	860	750	BOS	EOS	121	30	28	7:39	7:44	CS		11/10/2010	P
P-16/17	9:53	MR	M22	860	750	BOS	EOS	108	30	29	7:48	7:53	CS		11/10/2010	P
P-17/18	10:02	MR	M22	860	750	BOS	13'> BOS	13	15	15	8:30	8:35	CS		11/10/2010	P
P-17/18	10:18	MR	M22	860	750	13'> BOS	EOS	75	15	14	7:59	8:04	CS		11/10/2010	P
P-18/19	10:33	MR	M22	860	750	BOS	EOS	67	15	14	8:08	8:13	CS		11/10/2010	P
P-19/21	10:48	MR	M22	860	750	BOS	7'> BOS	7	15	15	8:26	8:31	CS		11/10/2010	P
P-20/21	10:43	MR	M22	860	750	BOS	EOS	10	15	14	8:28	8:33	CS		11/10/2010	P
P-19/20	10:50	MR	M22	860	750	BOS	EOS	22	15	12	8:20	8:25	CS		11/10/2010	P
P-20/31	4:45	MR	M22	860	750	BOS	EOS	9	15	15	8:24	8:29	CS		11/10/2010	P
P-19/31	4:42	MR	M22	860	750	BOS	EOS	17	15	13	8:13	8:18	CS		11/10/2010	P
P-18/30	4:40	MR	M22	860	750	BOS	EOS	22	15	12	8:05	8:10	CS		11/10/2010	P
P-17/28	4:38	MR	M22	860	750	BOS	EOS	22	15	13	7:56	8:01	CS		11/10/2010	P
P-16/27	4:36	MR	M22	860	750	BOS	EOS	19	30	28	7:42	7:47	CS		11/10/2010	P
P-15/27	4:35	MR	M22	860	750	BOS	EOS	7	30	28	7:30	7:35	CS		11/10/2010	P
P-15/26	4:25	MR	M22	860	750	BOS	EOS	10	30	29	7:14	7:19	CS		11/10/2010	P
								1193								

Johnston Co. - Full Field QC Complete

HALLATON, INC.

1206 SPARKS RD., SPARKS, MD 21152
410-583-7700 Fax 410-583-7720

Seaming and Non Destructive Test Log

Project No.: 1043/16310
Project Name: Johnston Co.
Weld Date: 11/6/2010
Project Location: Smithfield, NC
Page: 2 of 3

LLDPE

30 mil.

SEAM # (P#/P#)	WELD TIME	TECH ID	Machine ID	Machine Temp	Machine Speed or Preheat	Start Point	End Point	Seam Length (Feet)	Air Pressure Test					Vac Test Tech	Test Date	Pass / Fail
									PSI		Time		Tech			
									Start	Finish	Start	Finish				
P-14/25	4:24	MR	M22	860	750	6'> BOS	EOS	6	30	30	7:08	7:13	CS		11/10/2010	P
P-14/29	4:23	MR	M22	860	750	BOS	EOS	11	15	14	5:19	5:24	JR		11/10/2010	P
P-9/32	4:16	MR	M22	860	750	BOS	EOS	22	15	14	8:47	8:52	CS		11/10/2010	P
P-8/33	4:14	MR	M22	860	750	BOS	EOS	21	15	13	8:54	8:59	CS		11/10/2010	P
P-8/35	4:14	MR	M22	860	750	BOS	EOS	5	15	15	9:00	9:05	CS		11/10/2010	P
P-6/35	4:13	MR	M22	860	750	BOS	EOS	17	15	15	9:03	9:08	CS		11/10/2010	P
P-6/36	4:13	MR	M22	860	750	BOS	EOS	9	15	15	9:08	9:13	CS		11/10/2010	P
P-5/36	4:12	MR	M22	860	750	BOS	EOS	13	15	15	9:23	9:28	CS		11/10/2010	P
P-5/37	4:12	MR	M22	860	750	BOS	EOS	12	15	14	9:25	9:30	CS		11/10/2010	P
P-4/37	4:11	MR	M22	860	750	BOS	EOS	9	15	14	9:31	9:36	CS		11/10/2010	P
P-4/39	4:10	MR	M22	860	750	BOS	EOS	16	15	14	9:33	9:38	CS		11/10/2010	P
P-30/31	12:08	MR	M22	860	750	BOS	EOS	42	15	15	8:10	8:15	CS		11/10/2010	P
P-28/30	12:00	MR	M22	860	750	BOS	EOS	81	15	15	8:01	8:06	CS		11/10/2010	P
P-27/28	11:56	CS	M8	860	700	BOS	60'> BOS	60	30	29	7:45	7:50	CS		11/10/2010	P
P-27/28	12:00	CS	M8	860	700	60'> BOS	EOS	39	15	15	8:37	8:42	CS		11/10/2010	P
P-26/27	11:35	MR	M22	860	750	BOS	EOS	118	30	29	7:32	7:37	CS		11/10/2010	P
P-26/29	11:34	CS	M8	860	700	10'> BOS	EOS	11	30	30	7:27	7:32	CS		11/10/2010	P
P-25/29	11:38	CS	M8	860	700	BOS	EOS	16	30	29	7:03	7:08	CS		11/10/2010	P
P-25/26	11:39	CS	M8	860	700	BOS	60'> BOS	60	30	28	7:36	7:41	CS		11/10/2010	P
P-25/26	11:47	CS	M8	860	700	60'> BOS	EOS	59	15	14	8:38	8:43	CS		11/10/2010	P
P-24/25	11:07	MR	M22	860	750	BOS	EOS	155	15	15	5:03	5:08	JR		11/10/2010	P
P-23/24	11:02	CS	M8	860	700	BOS	82'> BOS	82	30	26	3:48	3:53	JR		11/10/2010	P
P-23/24	11:13	CS	M8	860	700	82'> BOS	EOS	80	15	13	8:16	8:21	GP		11/10/2010	P
P-22/23	10:32	CS	M8	860	700	BOS	EOS	176	30	28	3:31	3:36	JR		11/10/2010	P
P-22/32	2:02	CS	M8	860	750	BOS	82'> BOS	82	15	13	8:44	8:49	CS		11/10/2010	P
P-22/32	2:12	CS	M8	860	750	82'> BOS	EOS	102	15	14	8:18	8:23	GP		11/10/2010	P
P-32/33	2:30	CS	M8	860	750	BOS	EOS	190	15	14	8:49	8:54	CS		11/10/2010	P
P-33/35	2:33	MR	M22	860	750	BOS	54'> BOS	54	15	14	8:56	9:01	CS		11/10/2010	P
P-33/35	2:42	MR	M22	860	750	54'> BOS	77'> BOS	23	15	15	8:33	8:38	GP		11/10/2010	P
P-33/35	2:44	MR	M22	860	750	77'> BOS	113'> BOS	36	15	12	8:29	8:34	GP		11/10/2010	P
P-33/35	2:47	MR	M22	860	750	113'> BOS	123'> BOS	10	15	12	8:36	8:41	GP		11/10/2010	P
P-33/35	2:48	MR	M22	860	750	123'> BOS	EOS	12	15	14	8:36	8:41	GP		11/10/2010	P
P-34/35	2:50	MR	M22	860	750	BOS	EOS	30	15	13	8:39	8:44	GP		11/10/2010	P
								1659								

Johnston Co. - Full Field QC Complete

HALLATON, INC.

1206 SPARKS RD., SPARKS, MD 21152
410-583-7700 Fax 410-583-7720

Seaming and Non Destructive Test Log

Project No.: 1043/16310
Project Name: Johnston Co.
Weld Date: 11/6/2010
Project Location: Smithfield, NC
Page: 3 of 3

LLDPE

30 mil.

SEAM # (P#/P#)	WELD TIME	TECH ID	Machine ID	Machine Temp	Machine Speed or Preheat	Start Point	End Point	Seam Length (Feet)	Air Pressure Test					Vac Test Tech	Test Date	Pass / Fail
									PSI		Time		Tech			
									Start	Finish	Start	Finish				
P-33/34	2:55	MR	M22	860	750	BOS	EOS	63	15	12	8:43	8:48	GP		11/10/2010	P
P-34/36	3:22	CS	M8	860	750	BOS	EOS	85	15	14	8:59	9:04	GP		11/10/2010	P
P-35/36	3:17	CS	M8	860	750	43'> BOS	EOS	43	15	14	8:57	9:02	GP		11/10/2010	P
P-35/36	3:07	CS	M8	860	750	BOS	43'> BOS	79	15	14	9:05	9:10	CS		11/10/2010	P
P-36/37	3:23	MR	M22	860	750	BOS	73'> BOS	73	15	12	9:14	9:19	CS		11/10/2010	P
P-36/37	3:32	MR	M22	860	750	73'> BOS	EOS	149	15	13	9:03	9:08	GP		11/10/2010	P
P-37/38	4:02	CS	M8	860	750	BOS	EOS	176	15	12	9:14	9:19	GP		11/10/2010	P
P-38/39	3:43	CS	M8	860	750	BOS	EOS	30	15	13	9:12	9:17	GP		11/10/2010	P
P-37/39	3:50	CS	M8	860	750	BOS	EOS	56	15	12	9:29	9:34	CS		11/10/2010	P
P-3/40	4:07	MR	M22	860	750	BOS	EOS	12	15	14	9:35	9:40	CS		11/10/2010	P
P-3/39	4:05	MR	M22	860	750	BOS	EOS	10	15	14	9:36	9:41	CS		11/10/2010	P
								776								

HALLATON, INC.

1206 SPARKS RD., SPARKS, MD 21152
410-583-7700 Fax 410-583-7720

Seaming and Non Destructive Test Log

Project No.: 1043/16310
Project Name: Johnston Co.
Weld Date: 11/8/2010
Project Location: Smithfield, NC
Page: 1 of 2

LLDPE

30 mil.

SEAM # (P#/P#)	WELD TIME	TECH ID	Machine ID	Machine Temp	Machine Speed or Preheat	Start Point	End Point	Seam Length (Feet)	Air Pressure Test					Vac Test Tech	Test Date	Pass / Fail
									PSI		Time		Tech			
									Start	Finish	Start	Finish				
P-39/40	8:14	CS	M8	860	750	BOS	EOS	40	15	12	9:35	9:40	CS		11/10/2010	P
P-38/40	8:17	CS	M8	860	750	BOS	30'> BOS	30	15	13	9:22	9:27	GP		11/10/2010	P
P-38/40	8:20	CS	M8	860	750	30'> BOS	102'> BOS	102	15	13	9:44	9:49	GP		11/10/2010	P
P-40/41	7:50	MR	M22	860	750	72'> BOS	EOS	186	15	12	9:26	9:31	GP		11/10/2010	P
P-40/41	7:50	MR	M22	860	750	BOS	72'> BOS	72	15	14	9:52	9:57	CS		11/10/2010	P
P-41/42	8:35	MR	M22	860	750	BOS	76'> BOS	76	15	14	9:57	10:02	CS		11/10/2010	P
P-41/42	8:45	MR	M22	860	750	96'> BOS	EOS	191	15	15	9:29	9:34	GP		11/10/2010	P
P-42/43	8:58	CS	M8	860	750	76'> BOS	EOS	205	15	14	9:39	9:44	GP		11/10/2010	P
P-42/43	8:48	CS	M8	860	750	BOS	76'> BOS	76	15	14	10:00	10:05	CS		11/10/2010	P
P-43/44	9:10	MR	M22	860	750	BOS	EOS	286	15	14	10:05	10:10	CS		11/10/2010	P
P-46/44	9:32	CS	M8	860	800	BOS	43'> BOS	43	15	14	10:46	10:51	CS		11/10/2010	P
P-46/44	9:36	CS	M8	860	800	43'> BOS	EOS	12	15	12	9:41	9:46	GP		11/10/2010	P
P-45/46	9:30	CS	M8	860	800	BOS	EOS	22	15	15	9:52	9:57	GP		11/10/2010	P
P-44/45	9:43	CS	M8	860	800	BOS	EOS	216	15	14	9:45	9:50	GP		11/10/2010	P
P-45/47	9:58	MR	M22	860	750	BOS	EOS	216	15	15	9:52	9:57	GP		11/10/2010	P
P-46/47	9:48	MR	M22	860	750	BOS	EOS	81	15	14	10:49	10:54	CS		11/10/2010	P
P-48/50	10:40	MR	M22	860	750	BOS	EOS	173	15	13	11:10	11:15	CS		11/10/2010	P
P-50/51	11:25	CS	M8	860	800	BOS	EOS	30	15	14	11:19	11:24	GP		11/10/2010	P
P-51/52	11:24	CS	M8	860	800	BOS	EOS	17	15	12	11:10	11:15	GP		11/10/2010	P
P-50/52	11:27	CS	M8	860	800	BOS	EOS	131	15	14	11:39	11:44	GP		11/10/2010	P
P-52/53	11:32	MR	M22	860	750	BOS	53'> BOS	53	15	15	10:03	10:08	GP		11/10/2010	P
P-52/53	11:39	MR	M22	860	750	53'> BOS	89'> BOS	36	15	13	10:15	10:20	GP		11/10/2010	P
P-52/53	11:39	MR	M22	860	750	89'> BOS	EOS	127	15	13	10:20	10:25	GP		11/10/2010	P
P-49/50	11:20	CS	M8	860	800	BOS	10'> BOS	10	15	12	11:37	11:42	GP		11/10/2010	P
P-49/50	11:21	CS	M8	860	800	10'> BOS	EOS	23	15	13	11:31	11:36	GP		11/10/2010	P
P-48/49	11:46	MR	M22	860	750	BOS	EOS	124	15	12	11:31	11:36	GP		11/10/2010	P
P-53/55	1:53	CS	M8	860	900	BOS	EOS	21	15	14	10:05	10:10	GP		11/10/2010	P
P-54/55	1:48	CS	M8	860	900	BOS	EOS	13	15	15	10:18	10:23	GP		11/10/2010	P
P-53/54	1:55	CS	M8	860	900	BOS	EOS	157	15	12	10:12	10:17	GP		11/10/2010	P
P-54/56	2:00	MR	M22	860	700	BOS	115'> BOS	115	15	13	10:30	10:35	GP		11/10/2010	P
P-54/56	2:15	MR	M22	860	700	115'> BOS	EOS	16	15	14	11:48	11:53	GP		11/10/2010	P
P-56/57	2:29	CS	M8	860	900	BOS	9'> BOS	9	15	15	10:36	10:41	GP		11/10/2010	P
P-56/57	2:28	CS	M8	860	900	9'> BOS	93'> BOS	84	15	15	10:11	10:16	GP		11/10/2010	P
								2993								

Johnston Co. - Full Field QC Complete

HALLATON, INC.

1206 SPARKS RD., SPARKS, MD 21152
410-583-7700 Fax 410-583-7720

Seaming and Non Destructive Test Log

Project No.: 1043/16310
Project Name: Johnston Co.
Weld Date: 11/8/2010
Project Location: Smithfield, NC
Page: 2 of 2

LLDPE

30 mil.

SEAM # (P#/P#)	WELD TIME	TECH ID	Machine ID	Machine Temp	Machine Speed or Preheat	Start Point	End Point	Seam Length (Feet)	Air Pressure Test					Vac Test Tech	Test Date	Pass / Fail
									PSI		Time		Tech			
									Start	Finish	Start	Finish				
P-57/58	2:38	CS	M8	860	900	BOS	48'> BOS	48	15	13	10:45	10:50	GP		11/10/2010	P
P-57/58	2:43	CS	M8	860	900	48'> BOS	EOS	7	15	15	11:52	11:57	GP		11/10/2010	P
P-56/57	2:38	CS	M8	860	900	93'> BOS	EOS	6	15	13	11:49	11:54	GP		11/10/2010	P
P-58/59	2:49	CS	M8	860	900	BOS	EOS	10	15	14	10:54	10:59	GP		11/10/2010	P
P-47/59	3:36	MR	M22	860	700	BOS	EOS	9	15	14	10:54	10:59	GP		11/10/2010	P
P-47/58	3:26	MR	M22	860	700	BOS	EOS	40	15	12	10:50	10:55	GP		11/10/2010	P
P-47/57	3:21	MR	M22	860	700	BOS	5'> BOS	5	15	15	10:34	10:39	GP		11/10/2010	P
P-47/57	3:21	MR	M22	860	700	5'> BOS	EOS	35	15	15	10:42	10:47	GP		11/10/2010	P
P-47/56	3:18	MR	M22	860	700	BOS	EOS	41	15	12	10:26	10:31	GP		11/10/2010	P
P-47/54	3:17	MR	M22	860	700	BOS	EOS	16	15	12	10:26	10:31	GP		11/10/2010	P
P-47/55	3:14	MR	M22	860	700	BOS	EOS	25	15	15	10:07	10:12	GP		11/10/2010	P
P-47/53	3:10	MR	M22	860	700	BOS	EOS	35	15	15	10:00	10:05	GP		11/10/2010	P
P-47/53	3:10	MR	M22	860	700	BOS	6'> BOS	6	15	14	9:59	10:04	GP		11/10/2010	P
P-47/52	3:08	MR	M22	860	700	BOS	EOS	11	15	15	11:10	11:15	GP		11/10/2010	P
P-47/51	3:07	MR	M22	860	700	9'> BOS	EOS	20	15	15	11:13	11:18	GP		11/10/2010	P
P-47/51	3:07	MR	M22	860	700	BOS	9'> BOS	9	15	14	11:13	11:18	GP		11/10/2010	P
P-47/50	3:00	MR	M22	860	700	6'> BOS	31'> BOS	31	15	12	11:07	11:12	GP		11/10/2010	P
P-48/EL	3:52	MR	M22	860	700	BOS	EOS	22	15	13	11:04	11:09	GP		11/10/2010	P
P-47/EL	3:55	MR	M22	860	700	BOS	EOS	17	15	15	11:02	11:07	CS		11/10/2010	P
P-46/EL	3:57	MR	M22	860	700	BOS	EOS	22	15	14	10:53	10:58	CS		11/10/2010	P
P-44/EL	3:58	MR	M22	860	700	BOS	EOS	22	15	13	10:44	10:49	CS		11/10/2010	P
P-43/EL	3:59	MR	M22	860	700	4'> BOS	EOS	16	15	15	10:11	10:16	CS		11/10/2010	P
P-1/42	4:11	MR	M22	860	700	BOS	EOS	22	15	14	10:03	10:08	CS		11/10/2010	P
P-2/41	4:13	MR	M22	860	700	BOS	EOS	22	15	13	9:55	10:00	CS		11/10/2010	P
EX-1/P-40	4:15	MR	M22	860	700	BOS	EOS	14	15	12	9:40	9:45	CS		11/10/2010	P
P-38/40	8:25	CS	M8	860	800	102'> BOS	EOS	72	15	12	9:32	9:37	GP		11/10/2010	P
P-49/52	11:35	CS	M8	860	800	BOS	EOS	105	15	14	11:45	11:50	GP		11/10/2010	
								688								

Johnston Co. - Full Field QC Complete

HALLATON, INC.

1206 SPARKS RD., SPARKS, MD 21152
410-583-7700 Fax 410-583-7720

Seaming and Non Destructive Test Log

Project No.: 1043-16310
Project Name: Johnston Co.
Weld Date: 11/12/2010
Project Location: Smithfield, NC
Page: 1 of 3

LLDPE

30 mil.

SEAM # (P#/P#)	WELD TIME	TECH ID	Machine ID	Machine Temp	Machine Speed or Preheat	Start Point	End Point	Seam Length (Feet)	Air Pressure Test					Vac Test Tech	Test Date	Pass / Fail
									PSI		Time		Tech			
									Start	Finish	Start	Finish				
P-48/60	4:13	MR	M22	860	700	BOS	EOS	290	15	15	7:30	7:35	MR		11/13/2010	P
P-60/EL	5:54	CS	M8	860	800	BOS	EOS	22	15	15	8:06	8:11	MR		11/13/2010	P
P-60/62	7:50	MR	M22	860	700	6'> BOS	37'> BOS	31	15	14	7:31	7:36	MR		11/13/2010	P
P-60/62	7:54	MR	M22	860	700	38'> BOS	EOS	53	15	14	7:36	7:41	MR		11/13/2010	P
P-60/61	8:03	MR	M22	860	700	BOS	EOS	197	15	15	7:45	7:50	MR		11/13/2010	P
P-61/63	8:23	CS	M8	860	800	BOS	EOS	223	15	14	8:20	8:25	MR		11/13/2010	P
P-61/62	7:41	MR	M22	860	700	BOS	EOS	30	15	15	7:49	7:54	MR		11/13/2010	P
P-62/63	8:20	CS	M8	860	800	39'> BOS	EOS	37	15	15	8:02	8:07	MR		11/13/2010	P
P-62/63	8:17	CS	M8	860	800	BOS	29'> BOS	29	15	15	8:17	8:22	MR		11/13/2010	P
P-63/64	8:47	MR	M22	860	700	BOS	EOS	288	15	14	8:28	8:33	MR		11/13/2010	P
P-62/EL	5:52	CS	M8	860	800	BOS	EOS	22	15	14	8:07	8:12	MR		11/13/2010	P
P-63/EL	5:49	CS	M8	860	800	2'> BOS	EOS	20	15	14	8:26	8:31	MR		11/13/2010	P
P-64/EL	5:47	CS	M8	860	800	BOS	EOS	22	15	15	8:30	8:35	MR		11/13/2010	P
P-66/EL	5:34	MR	M22	860	700	BOS	EOS	22	15	14	8:49	8:54	MR		11/13/2010	P
P-64/66	9:04	CS	M8	860	800	BOS	EOS	171	15	15	8:41	8:46	MR		11/13/2010	P
P-65/66	8:55	CS	M8	860	800	BOS	EOS	31	15	15	9:00	9:05	MR		11/13/2010	P
P-64/65	9:27	CS	M8	860	800	BOS	EOS	117	15	13	9:01	9:06	MR		11/13/2010	P
P-65/67	9:25	MR	M22	860	700	BOS	EOS	142	15	15	9:06	9:11	MR		11/13/2010	P
P-66/67	9:42	MR	M22	860	700	BOS	EOS	144	15	15	8:50	8:55	MR		11/13/2010	P
P-67/EL	5:32	MR	M22	860	700	BOS	EOS	22	15	15	8:55	9:00	MR		11/13/2010	P
P-67/68	9:42	CS	M8	860	800	BOS	EOS	288	15	14	9:21	9:26	MR		11/13/2010	P
P-68/EL	5:30	MR	M22	860	700	BOS	EOS	22	15	14	9:30	9:35	MR		11/13/2010	P
P-68/69	10:03	MR	M22	860	700	BOS	EOS	287	15	13	9:27	9:32	MR		11/13/2010	P
P-69/EL	5:28	MR	M22	860	700	BOS	EOS	22	15	14	9:37	9:42	MR		11/13/2010	P
P-69/70	10:18	CS	M8	860	800	BOS	EOS	289	15	13	9:44	9:49	MR		11/13/2010	P
P-70/EL	5:26	MR	M22	860	700	BOS	EOS	22	15	14	9:52	9:57	MR		11/13/2010	P
P-70/72	10:58	MR	M22	860	700	BOS	EOS	90	15	15	9:56	10:01	MR		11/13/2010	P
P-72/EL	5:24	MR	M22	860	700	BOS	EOS	22	15	15	10:02	10:07	MR		11/13/2010	P
P-70/71	11:10	MR	M22	860	700	BOS	EOS	198	15	15	10:12	10:17	MR		11/13/2010	P
P-71/72	11:00	CS	M8	860	800	BOS	EOS	31	15	14	7:27	7:32	CS		11/13/2010	P
P-71/73	11:09	CS	M8	860	800	BOS	EOS	224	15	15	7:23	7:28	CS		11/13/2010	P
P-72/73	11:03	CS	M8	860	800	10'> BOS	EOS	53	15	15	7:20	7:25	CS		11/13/2010	P
P-73/EL	5:22	MR	M22	860	700	BOS	EOS	22	15	14	7:43	7:48	CS		11/13/2010	P
								3483								

Johnston Co. - Full Field QC Complete

HALLATON, INC.

1206 SPARKS RD., SPARKS, MD 21152
410-583-7700 Fax 410-583-7720

Seaming and Non Destructive Test Log

Project No.: 1043-16310
Project Name: Johnston Co.
Weld Date: 11/12/2010
Project Location: Smithfield, NC
Page: 2 of 3

LLDPE
30 mil.

SEAM # (P#/P#)	WELD TIME	TECH ID	Machine ID	Machine Temp	Machine Speed or Preheat	Start Point	End Point	Seam Length (Feet)	Air Pressure Test					Vac Test Tech	Test Date	Pass / Fail
									PSI		Time		Tech			
									Start	Finish	Start	Finish				
P-74/EL	5:20	MR	M22	860	700	BOS	EOS	23	15	14	7:52	7:57	CS		11/13/2010	P
P-76/EL	5:18	MR	M22	860	700	2'> BOS	EOS	21	15	15	8:09	8:14	CS		11/13/2010	P
P-77/EL	5:16	MR	M22	860	700	BOS	EOS	22	15	14	8:16	8:21	CS		11/13/2010	P
P-78/EL	5:14	MR	M22	860	700	BOS	17'> BOS	17	15	14	8:31	8:36	CS		11/13/2010	P
P-80/EL	5:12	MR	M22	860	700	BOS	8'> BOS	80	15	14	9:19	9:24	CS		11/13/2010	P
P-81/EL	5:10	MR	M22	860	700	BOS	EOS	22	15	14	9:15	9:20	CS		11/13/2010	P
P-82/EL	5:08	MR	M22	860	700	BOS	17'> BOS	17	15	14	9:13	9:18	CS		11/13/2010	P
P-83/EL	5:06	MR	M22	860	700	BOS	EOS	22	15	14	9:10	9:15	CS		11/13/2010	P
P-84/EL	5:04	MR	M22	860	700	BOS	EOS	22	15	14	9:06	9:11	CS		11/13/2010	P
P-86/EL	5:02	MR	M22	860	700	BOS	EOS	22	15	15	9:04	9:09	CS		11/13/2010	P
P-73/74	11:25	JO	M23	860	700	BOS	86'> BOS	86	15	15	7:34	7:39	CS		11/13/2010	P
P-73/74	11:37	JO	M23	860	700	86'> BOS	194'> BOS	108	15	15	7:40	7:45	CS		11/13/2010	P
P-73/74	11:52	JO	M23	860	700	194'> BOS	278'> BOS	84	15	14	10:39	10:44	CS		11/13/2010	P
P-74/75	11:39	CS	M8	860	800	BOS	EOS	123	15	15	10:36	10:41	CS		11/13/2010	P
P-75/76	11:47	CS	M8	860	800	BOS	EOS	31	15	13	10:33	10:38	CS		11/13/2010	P
P-75/77	2:07	CS	M8	860	800	BOS	EOS	146	15	14	10:29	10:34	CS		11/13/2010	P
P-74/76	11:46	MR	M22	860	700	BOS	EOS	164	15	15	7:47	7:52	CS		11/13/2010	P
P-76/77	1:44	CS	M8	860	800	BOS	EOS	142	15	12	7:50	7:55	CS		11/13/2010	P
P-77/78	2:00	MR	M22	860	700	BOS	145'> BOS	145	15	15	8:00	8:05	CS		11/13/2010	P
P-77/78	2:20	MR	M22	860	700	145'> BOS	170'> BOS	25	15	14	10:21	10:26	CS		11/13/2010	P
P-77/78	2:22	MR	M22	860	700	170'> BOS	EOS	116	15	13	10:25	10:30	CS		11/13/2010	P
P-78/79	2:50	CS	M8	860	800	BOS	EOS	67	15	14	10:01	10:06	CS		11/13/2010	P
P-79/80	2:38	MR	M22	860	700	BOS	EOS	26	15	13	9:56	10:01	CS		11/13/2010	P
P-79/81	3:07	MR	M22	860	700	BOS	18'> BOS	18	15	13	9:58	10:03	CS		11/13/2010	P
P-79/81	3:10	MR	M22	860	700	18'> BOS	EOS	40	15	13	10:03	10:08	CS		11/13/2010	P
P-80/81	2:42	MR	M22	860	700	BOS	EOS	228	15	15	8:25	8:30	CS		11/13/2010	P
P-78/80	2:49	CS	M8	860	800	133'> BOS	EOS	86	15	15	9:46	9:51	CS		11/13/2010	P
P-78/80	2:34	CS	M8	860	800	107'> BOS	133'> BOS	26	15	15	9:43	9:48	CS		11/13/2010	P
P-78/80	2:31	CS	M8	860	800	36'> BOS	71'> BOS	71	15	12	9:40	9:45	CS		11/13/2010	P
P-78/80	2:27	CS	M8	860	800	BOS	36'> BOS	36	15	14	8:14	8:19	CS		11/13/2010	P
P-81/82	3:03	CS	M8	860	800	BOS	EOS	284	15	15	8:27	8:32	CS		11/13/2010	P
P-82/83	3:30	MR	M22	860	700	BOS	EOS	281	15	15	8:36	8:41	CS		11/13/2010	P
P-83/84	3:44	CS	M8	860	800	BOS	EOS	281	15	14	8:42	8:47	CS		11/13/2010	P
								2882								

Johnston Co. - Full Field QC Complete

HALLATON, INC.

1206 SPARKS RD., SPARKS, MD 21152
410-583-7700 Fax 410-583-7720

Seaming and Non Destructive Test Log

Project No.: 1043-16310
Project Name: Johnston Co.
Weld Date: 11/12/2010
Project Location: Smithfield, NC
Page: 3 of 3

LLDPE

30 mil.

SEAM # (P#/P#)	WELD TIME	TECH ID	Machine ID	Machine Temp	Machine Speed or Preheat	Start Point	End Point	Seam Length (Feet)	Air Pressure Test					Vac Test Tech	Test Date	Pass / Fail
									PSI		Time		Tech			
									Start	Finish	Start	Finish				
P-84/85	4:28	CS	M8	850	800	BOS	EOS	238	15	13	9:29	9:34	CS		11/13/2010	P
P-85/86	4:20	CS	M8	850	800	BOS	EOS	31	15	13	9:25	9:30	CS		11/13/2010	P
P-84/86	4:25	CS	M8	850	800	BOS	EOS	43	15	15	8:40	8:45	CS		11/13/2010	P
P-86/87	5:00	CS	M8	850	800	BOS	EOS	56	15	14	8:53	8:58	CS		11/13/2010	P
P-85/87	5:07	CS	M8	850	800	BOS	217'> BOS	217	15	14	9:33	9:38	CS		11/13/2010	P
P-85/87	5:15	CS	M8	850	800	217'> BOS	EOS	8	15	13	10:40	10:45	CS		11/13/2010	P
								593								

Johnston Co. - Full Field QC Complete

HALLATON, INC.

1206 SPARKS RD., SPARKS, MD 21152
410-583-7700 Fax 410-583-7720

Seaming and Non Destructive Test Log

Project No.: 1043-16310
Project Name: Johnston Co.
Weld Date: 11/15/2010
Project Location: Smithfield, NC
Page: 1 of 1

LLDPE

30 mil.

SEAM # (P#/P#)	WELD TIME	TECH ID	Machine ID	Machine Temp	Machine Speed or Preheat	Start Point	End Point	Seam Length (Feet)	Air Pressure Test					Vac Test Tech	Test Date	Pass / Fail
									PSI		Time		Tech			
									Start	Finish	Start	Finish				
P-88/90	8:08	CS	M8	850	750	BOS	EOS	121	15	15	10:30	10:35	JO		11/15/2010	P
P-90/91	8:00	MR	M22	860	700	BOS	EOS	95	15	13	10:31	10:36	JO		11/15/2010	P
P-89/90	7:46	MR	M22	860	700	BOS	EOS	15	15	15	10:36	10:41	JO		11/15/2010	P
P-88/89	8:23	CS	M8	850	750	BOS	EOS	160	15	14	10:54	10:59	JO		11/15/2010	P
P-89/91	8:12	MR	M22	860	700	BOS	EOS	184	15	13	10:55	11:00	JO		11/15/2010	P
P-91/92	8:30	MR	M22	860	700	BOS	EOS	279	15	15	10:59	11:04	JO		11/15/2010	P
P-92/93	9:17	CS	M8	850	750	BOS	EOS	102	15	13	11:07	11:12	JO		11/15/2010	P
P-93/94	8:50	CS	M8	850	750	BOS	EOS	32	15	15	11:09	11:14	JO		11/15/2010	P
P-94/95	9:08	MR	M22	860	700	BOS	EOS	149	15	14	11:21	11:26	JO		11/15/2010	P
P-93/95	9:29	MR	M22	860	700	BOS	EOS	125	15	14	11:06	11:11	JO		11/15/2010	P
P-92/94	8:58	CS	M8	850	750	BOS	EOS	167	15	12	11:01	11:06	JO		11/15/2010	P
P-95/96	9:44	CS	M8	850	750	BOS	216'> BOS	216	15	13	11:27	11:32	JO		11/15/2010	P
P-95/96	10:12	CS	M8	850	750	216' > BOS	268'> BOS	52	15	14	11:47	11:52	JO		11/15/2010	P
P-96/97	10:22	MR	M22	860	700	BOS	EOS	58	15	15	11:48	11:53	JO		11/15/2010	P
P-97/98	9:42	MR	M22	860	700	BOS	EOS	30	15	15	11:58	12:03	JO		11/15/2010	P
P-98/99	10:21	CS	M8	850	750	BOS	EOS	191	15	14	11:32	11:37	JO		11/15/2010	P
P-96/98	9:52	MR	M22	860	700	BOS	EOS	215	15	13	11:34	11:39	JO		11/15/2010	P
P-99/100	11:00	CS	M8	850	750	BOS	EOS	271	15	14	11:38	11:43	JO		11/15/2010	P
P-97/99	10:45	CS	M8	850	750	BOS	EOS	81	15	12	11:59	12:04	JO		11/15/2010	P
P-87/88	10:40	MR	M22	860	700	BOS	EOS	282	15	14	12:08	12:13	JO		11/15/2010	P
P-87/EL	11:44	MR	M22	860	700	BOS	EOS	22	15	15	12:09	12:14	JO		11/15/2010	P
P-88/EL	11:41	MR	M22	860	700	BOS	EOS	23	15	14	1:36	1:41	JO		11/15/2010	P
P-90/EL	11:39	MR	M22	860	700	BOS	EOS	23	15	15	1:39	1:44	JO		11/15/2010	P
P-91/EL	11:37	MR	M22	860	700	BOS	EOS	22	15	13	1:40	1:45	JO		11/15/2010	P
P-92/EL	11:35	MR	M22	860	700	BOS	EOS	22	15	13	1:46	1:51	JO		11/15/2010	P
P-94/EL	2:23	MR	M22	860	700	BOS	EOS	22	15	13	2:58	3:03	JO		11/15/2010	P
P-95/EL	2:20	MR	M22	860	700	BOS	EOS	23	15	13	2:59	3:04	JO		11/15/2010	P
P-96/EL	2:16	MR	M22	860	700	6'> BOS	EOS	16	15	15	3:01	3:06	JO		11/15/2010	P
P-96/EL	2:18	MR	M22	860	700	BOS	6'> BOS	6	15	15	3:02	3:07	JO		11/15/2010	P
P-98/EL	2:16	MR	M22	860	700	BOS	EOS	22	15	15	3:27	3:32	JO		11/15/2010	P
P-99/EL	2:08	MR	M22	860	700	BOS	10'> BOS	10	15	15	3:28	3:33	JO		11/15/2010	P
P-99/EL	2:15	MR	M22	860	700	10'> BOS	EOS	12	15	14	3:31	3:36	JO		11/15/2010	P
P-100/EL	2:06	MR	M22	860	700	BOS	EOS	22	15	15	3:36	3:41	JO		11/15/2010	P
								3070								

Johnston Co. - Full Field QC Complete

HALLATON, INC.

1206 SPARKS RD., SPARKS, MD 21152
410-583-7700 Fax 410-583-7720

Seaming and Non Destructive Test Log

Project No.: 1043-16310
Project Name: Johnston Co.
Weld Date: 11/19/2010
Project Location: Smithfield, NC
Page: 1 of 3

LLDPE

30 mil.

SEAM # (P#/P#)	WELD TIME	TECH ID	Machine ID	Machine Temp	Machine Speed or Preheat	Start Point	End Point	Seam Length (Feet)	Air Pressure Test PSI Start	Air Pressure Test PSI Finish	Air Pressure Test Time Start	Air Pressure Test Time Finish	Air Pressure Test Tech	Vac Test Tech	Test Date	Pass / Fail
P-100/101	10:24	MR	M22	860	700	BOS	EOS	268	15	12	11:54	11:59	FF		11/20/2010	P
P-101/102	10:26	CS	M8	850	750	BOS	EOS	265	15	14	11:55	12:00	FF		11/20/2010	P
P-102/103	10:57	MR	M22	860	700	BOS	EOS	262	15	13	11:56	12:01	FF		11/20/2010	P
P-103/104	11:01	CS	M8	850	750	BOS	EOS	257	15	13	11:57	12:02	FF		11/20/2010	P
P-101/EL	5:02	MR	M22	860	750	BOS	EOS	22	15	15	7:17	7:22	MR		11/20/2010	P
P-102/EL	5:00	MR	M22	860	750	BOS	14'> BOS	14	15	15	7:25	7:30	MR		11/20/2010	P
P-102/EL	4:58	MR	M22	860	750	14'> BOS	EOS	8	15	14	7:18	7:23	MR		11/20/2010	P
P-103/EL	4:56	MR	M22	860	750	BOS	EOS	22	15	15	7:26	7:31	MR		11/20/2010	P
P-104/EL	4:54	MR	M22	860	750	BOS	EOS	22	15	15	7:38	7:43	MR		11/20/2010	P
P-105/EL	4:52	MR	M22	860	750	BOS	EOS	13	15	14	7:34	7:39	MR		11/20/2010	P
P-104/105	11:28	MR	M22	860	700	BOS	33'> BOS	33	15	15	7:43	7:48	MR		11/20/2010	P
P-104/105	11:30	MR	M22	860	700	33'> BOS	EOS	222	15	15	7:44	7:49	MR		11/20/2010	P
P-105/106	11:35	CS	M8	850	750	BOS	EOS	251	15	15	7:53	7:58	MR		11/20/2010	P
P-106/EL	4:50	MR	M22	860	750	BOS	12'> BOS	10	15	15	8:15	8:20	MR		11/20/2010	P
P-106/EL	4:48	MR	M22	860	750	12'> BOS	EOS	12	15	15	8:17	8:22	MR		11/20/2010	P
P-106/108	1:43	MR	M22	860	750	BOS	EOS	202	15	14	7:54	7:59	MR		11/20/2010	P
P-108/EL	4:46	MR	M22	860	750	BOS	EOS	22	15	15	8:04	8:09	MR		11/20/2010	P
P-108/109	1:58	MR	M22	860	800	BOS	EOS	221	15	15	8:00	8:05	MR		11/20/2010	P
P-109/EL	4:44	MR	M22	860	750	BOS	EOS	22	15	14	8:22	8:27	MR		11/20/2010	P
P-109/110	2:10	MR	M22	860	750	BOS	EOS	240	15	15	8:10	8:15	MR		11/20/2010	P
P-110/EL	4:42	MR	M22	860	750	BOS	EOS	22	15	14	8:23	8:28	MR		11/20/2010	P
P-110/112	2:32	CS	M8	850	800	BOS	EOS	156	15	13	8:44	8:49	MR		11/20/2010	P
P-112/EL	4:40	MR	M22	860	750	BOS	14'> BOS	14	15	15	8:33	8:38	MR		11/20/2010	P
P-112/113	2:58	MR	M22	860	750	BOS	EOS	105	15	15	8:40	8:45	MR		11/20/2010	P
P-113/115	3:17	CS	M8	850	800	BOS	EOS	208	15	15	8:50	8:55	MR		11/20/2010	P
P-115/EL	4:38	MR	M22	860	750	BOS	EOS	22	15	15	8:53	8:58	MR		11/20/2010	P
P-115/116	3:28	MR	M22	860	750	BOS	EOS	200	15	15	8:57	9:02	MR		11/20/2010	P
P-116/EL	5:39	MR	M22	860	750	BOS	EOS	22	15	15	8:58	9:03	MR		11/20/2010	P
P-116/118	3:45	CS	M8	850	800	BOS	EOS	192	15	15	9:04	9:09	MR		11/20/2010	P
P-118/EL	5:37	MR	M22	860	750	BOS	5'> BOS	5	15	14	9:12	9:17	MR		11/20/2010	P
P-118/EL	5:35	MR	M22	860	750	BOS	10'> EOS	12	15	14	9:05	9:10	MR		11/20/2010	P
P-118/119	4:08	CS	M8	850	800	BOS	EOS	188	15	15	9:11	9:16	MR		11/20/2010	P
P-119/EL	5:33	MR	M22	860	700	BOS	EOS	22	15	15	9:21	9:26	MR		11/20/2010	P
								3556								

Johnston Co. - Full Field QC Complete

HALLATON, INC.

1206 SPARKS RD., SPARKS, MD 21152
410-583-7700 Fax 410-583-7720

Seaming and Non Destructive Test Log

Project No.: 1043-16310
Project Name: Johnston Co.
Weld Date: 11/19/2010
Project Location: Smithfield, NC
Page: 2 of 3

LLDPE
30 mil.

SEAM # (P#/P#)	WELD TIME	TECH ID	Machine ID	Machine Temp	Machine Speed or Preheat	Start Point	End Point	Seam Length (Feet)	Air Pressure Test PSI Start	Air Pressure Test PSI Finish	Air Pressure Test Time Start	Air Pressure Test Time Finish	Tech	Vac Test Tech	Test Date	Pass / Fail
P-119/120	4:33	CS	M8	850	800	BOS	EOS	182	15	14	9:22	9:27	MR		11/20/2010	P
P-120/EL	5:31	MR	M22	860	750	BOS	16'> BOS	16	15	15	9:34	9:39	MR		11/20/2010	P
P-121/120	4:10	JO	M23	850	700	BOS	EOS	179	15	15	9:33	9:38	MR		11/20/2010	P
P-113/114	2:38	MR	M22	860	750	BOS	EOS	103	15	15	9:54	9:59	MR		11/20/2010	P
P-112/114	3:12	MR	M22	860	750	BOS	EOS	28	15	15	9:55	10:00	MR		11/20/2010	P
P-111/112	2:28	CS	M8	850	800	BOS	EOS	30	15	15	9:43	9:48	MR		11/20/2010	P
P-111/114	3:15	MR	M22	860	750	BOS	EOS	76	15	14	9:42	9:47	MR		11/20/2010	P
P-113/117	3:13	CS	M8	850	800	BOS	EOS	9	15	14	10:03	10:08	MR		11/20/2010	P
P-114/117	3:13	CS	M8	850	800	BOS	EOS	23	15	14	10:10	10:15	MR		11/20/2010	P
P-117/R-255	3:04	CS	M8	850	800	BOS	EOS	9	15	15	10:02	10:07	MR		11/20/2010	P
P-111/117	3:25	MR	M22	860	750	BOS	EOS	15	15	13	10:11	10:16	JO		11/20/2010	P
P-111/110	2:50	CS	M8	850	800	BOS	EOS	81	15	14	10:17	10:22	JO		11/20/2010	P
P-107/108	1:40	CS	M8	850	780	BOS	EOS	31	15	15	10:20	10:25	JO		11/20/2010	P
P-106/107	2:09	MR	M22	860	750	BOS	EOS	46	15	14	10:27	10:32	JO		11/20/2010	P
P-107/109	2:25	CS	M8	850	800	BOS	EOS	21	15	12	10:18	10:23	JO		11/20/2010	P
P-121/EL	5:29	MR	M22	860	750	BOS	EOS	22	15	13	10:00	10:05	JO		11/20/2010	P
P-123/EL	5:27	MR	M22	860	750	BOS	16'> BOS	16	15	14	10:01	10:06	JO		11/20/2010	P
P-121/123	4:50	JO	M23	850	700	BOS	98'> BOS	98	15	14	9:46	9:51	JO		11/20/2010	P
P-123/124	4:57	CS	M8	850	800	BOS	EOS	126	15	14	9:51	9:56	JO		11/20/2010	P
P-121/122	5:04	JO	M23	850	700	BOS	EOS	73	15	14	9:38	9:43	JO		11/20/2010	P
P-122/123	4:45	JO	M23	850	700	BOS	EOS	32	15	13	9:43	9:48	JO		11/20/2010	P
P-122/124	5:12	CS	M8	850	800	BOS	EOS	48	15	13	9:37	9:42	JO		11/20/2010	P
P-124/130	6:12	JO	M23	850	700	BOS	EOS	11	15	14	9:31	9:36	JO		11/20/2010	P
P-129/130	5:10	JO	M23	850	700	BOS	EOS	9	15	14	9:26	9:31	JO		11/20/2010	P
P-124/125	6:25	JO	M23	850	700	BOS	11'> BOS	11	15	15	8:18	8:23	JO		11/20/2010	P
P-124/125	6:23	JO	M23	850	700	11'> BOS	EOS	19	15	15	8:17	8:22	JO		11/20/2010	P
P-124/126	6:21	JO	M23	850	700	BOS	EOS	31	15	14	8:25	8:30	JO		11/20/2010	P
P-124/127	6:18	JO	M23	850	750	BOS	EOS	31	15	14	8:32	8:37	JO		11/20/2010	P
P-124/128	6:17	JO	M23	850	700	21'> BOS	EOS	10	15	15	8:53	8:58	JO		11/20/2010	P
P-124/128	6:17	JO	M23	850	700	14'> BOS	21'> BOS	7	15	15	8:55	9:00	JO		11/20/2010	P
P-124/128	6:16	JO	M23	850	750	BOS	14'> BOS	14	15	13	9:00	9:05	JO		11/20/2010	P
P-124/129	6:15	JO	M23	850	750	22'> BOS	EOS	9	15	15	8:15	8:20	JO		11/20/2010	P
P-124/129	6:13	JO	M23	850	700	7'> BOS	22'> BOS	15	15	13	9:18	9:23	JO		11/20/2010	P
								1431								

Johnston Co. - Full Field QC Complete

HALLATON, INC.

1206 SPARKS RD., SPARKS, MD 21152
410-583-7700 Fax 410-583-7720

Seaming and Non Destructive Test Log

Project No.: 1043-16310
Project Name: Johnston Co.
Weld Date: 11/19/2010
Project Location: Smithfield, NC
Page: 3 of 3

LLDPE

30 mil.

SEAM # (P#/P#)	WELD TIME	TECH ID	Machine ID	Machine Temp	Machine Speed or Preheat	Start Point	End Point	Seam Length (Feet)	Air Pressure Test					Vac Test Tech	Test Date	Pass / Fail
									PSI		Time		Tech			
									Start	Finish	Start	Finish				
P-124/129	6:13	JO	M23	850	700	BOS	7'> BOS	7	15	14	9:25	9:30	JO		11/20/2010	P
P-128/129	5:15	JO	M23	850	700	BOS	11'> BOS	11	15	15	9:12	9:17	JO		11/20/2010	P
P-128/129	5:16	JO	M23	850	700	11'> BOS	18'> BOS	7	15	15	9:10	9:15	JO		11/20/2010	P
P-128/129	5:16	JO	M23	850	700	18'> BOS	24'> BOS	6	15	15	9:08	9:13	JO		11/20/2010	P
P-127/128	5:20	JO	M23	850	700	BOS	61'> BOS	61	15	13	8:45	8:50	JO		11/20/2010	P
P-126/127	5:20	CS	M8	850	800	BOS	EOS	86	15	13	8:33	8:38	JO		11/20/2010	P
P-125/126	5:31	CS	M8	850	800	BOS	EOS	108	15	13	8:23	8:28	JO		11/20/2010	P
P-125/132	5:40	JO	M23	850	700	BOS	9'> BOS	9	15	15	8:11	8:16	JO		11/20/2010	P
P-131/132	5:35	JO	M23	850	700	BOS	EOS	16	15	13	7:55	8:00	JO		11/20/2010	P
P-125/131	5:41	JO	M23	850	700	BOS	104'> BOS	104	15	12	7:52	7:57	JO		11/20/2010	P
P-131/133	5:48	CS	M8	850	800	BOS	EOS	114	15	12	7:50	7:55	JO		11/20/2010	P
P-133/134	5:55	JO	M23	850	700	BOS	40'> BOS	40	15	13	7:31	7:36	JO		11/20/2010	P
P-133/134	5:59	JO	M23	850	700	40'> BOS	49'> BOS	9	15	13	7:45	7:50	JO		11/20/2010	P
P-133/134	6:00	JO	M23	850	700	49'> BOS	EOS	52	15	12	7:37	7:42	JO		11/20/2010	P
P-135/134	6:05	CS	M8	850	800	BOS	EOS	80	15	13	7:30	7:35	JO		11/20/2010	P
P-136/137	5:45	MR	M22	860	750	BOS	EOS	63	15	13	7:24	7:29	JO		11/20/2010	P
								773								

Johnston Co. - Full Field QC Complete

HALLATON, INC.

1206 SPARKS RD., SPARKS, MD 21152
410-583-7700 Fax 410-583-7720

Seaming and Non Destructive Test Log

Project No.: 1043-16310
Project Name: Johnston Co.
Weld Date: 11/20/2010
Project Location: Smithfield, NC
Page: 1 of 1

LLDPE

30 mil.

SEAM # (P#/P#)	WELD TIME	TECH ID	Machine ID	Machine Temp	Machine Speed or Preheat	Start Point	End Point	Seam Length (Feet)	Air Pressure Test					Vac Test Tech	Test Date	Pass / Fail
									PSI		Time		Tech			
									Start	Finish	Start	Finish				
P-135/136	10:50	MR	M22	860	750	BOS	EOS	79	15	13	3:20	3:25	JO		11/20/2010	P
P-136/EL	11:35	MR	M22	860	750	BOS	EOS	22	15	14	3:19	3:24	JO		11/20/2010	P
P-135/EL	11:37	MR	M22	860	750	BOS	EOS	22	15	13	3:18	3:23	JO		11/20/2010	P
P-134/EL	11:39	MR	M22	860	750	BOS	EOS	23	15	14	3:14	3:19	JO		11/20/2010	P
P-133/EL	11:41	MR	M22	860	750	BOS	EOS	24	15	15	3:12	3:17	JO		11/20/2010	P
P-131/EL	11:41	MR	M22	860	750	BOS	4'> BOS	4	15	14	3:11	3:16	JO		11/20/2010	P
P-131/EL	11:42	MR	M22	860	750	4'> BOS	EOS	9	15	15	3:10	3:15	JO		11/20/2010	P
P-132/EL	11:43	MR	M22	860	750	BOS	EOS	13	15	15	3:04	3:09	JO		11/20/2010	P
P-124/EL	11:45	MR	M22	860	750	BOS	EOS	22	15	14	3:03	3:08	JO		11/20/2010	P
								218								

Johnston Co. - Full Field QC Complete

HALLATON, INC.

1206 SPARKS ROAD, SPARKS, MD 21152
410-583-7700 Fax 410-583-7720

Geomembrane Seam Destructive Test Log

Project No.: 0901-2008
Project Name: Johnston Co LF area 1 closure
Start Date: 5/27/2009
Project Location: Smithfield, NC
Page: 1 of 1

Material: LLDPE

40 mil Thickness

Project Seam Requirements

Fusion:		Extrusion:	
Peel:	50	Peel:	44
Shear:	60	Shear:	60

DT#	Location	Date Removed	Welder ID		Wedge	Extruder	Seam Strength										Pass Fail	Tech ID	Remarks
			Machine	Operator	Temp/ Speed °F/fpm	Temp/ Preheat °F/°F	Peel (ppi) IN / OUT					Shear (ppi)							
							1	2	3	4	5	1	2	3	4	5			
1	P-1/2	5/27/2009	17	MR	850/700		66	65	62	65	64	66	67	66	68	65	P	ER	TX/TX
							67	68	64	65	67								
2	P-2/4	5/27/2009	17	MR	850/700		65	65	66	63	64	65	64	66	67	64	P	ER	TX/TX
							64	64	64	64	66								
3	P-6/7	5/27/2009	17	MR	850/700		63	64	63	65	64	64	65	66	67	66	P	ER	TX/TX
							62	62	64	64	63								
4	P-5/6	5/27/2009	17	MR	850/700		64	65	63	64	63	63	66	64	66	64	P	ER	TX/TX
							63	63	65	65	64								
5	P-6/8	5/27/2009	17	MR	850/700		64	64	66	64	63	66	65	65	67	64	P	ER	TX/TX
							63	66	65	64	65								
6	P-16/18	5/27/2009	17	MR	850/700		64	65	64	63	65	67	65	66	67	67	P	ER	TX/TX
							63	63	63	64	64								
7	P-11/12	5/27/2009	17	MR	850/700		64	64	64	64	64	67	67	65	64	66	P	ER	TX/TX
							63	65	63	65	65								
8	P-19/20	5/30/2009	17	MR	850/700		68	66	74	73	70	77	66	75	69	73	P	ER	TX/TX
							69	62	70	70	67								
9	P-27/28	6/4/2009	17	MR	850/700		63	64	62	64	64	74	70	76	77	75	P	ER	TX/TX
							64	63	62	65	66								

HALLATON, INC.

1206 SPARKS ROAD, SPARKS, MD 21152
410-583-7700 Fax 410-583-7720

Geomembrane Seam Destructive Test Log

Project No.: 1043-16310
Project Name: Johnston Co
Start Date: 11/3/2010
Project Location: Smithfield, NC
Page: 1 of 5

Material: LLDPE

30 mil Thickness

Project Seam Requirements

Fusion:		Extrusion:	
Peel:	38	Peel:	34
Shear:	45	Shear:	45

DT#	Location	Date Removed	Welder ID		Wedge	Extruder	Seam Strength										Pass Fail	Tech ID	Remarks
			Machine	Operator	Temp/ Speed °F/fpm	Temp/ Preheat °F/°F	Peel (ppi) IN / OUT					Shear (ppi)							
							1	2	3	4	5	1	2	3	4	5			
DS-1	P-1/2	11/5/2010	M22	MR	860/750		63	60	61	62	61	68	68	66	67	64	P	FF	TX/TX
							61	58	59	59	58								
DS-2	P-4/5	11/5/2010	M23	CS	800/700		65	66	64	66	59	57	67	66	67	64	P	FF	TX/TX
							66	57	67	68	63								
DS-3	P-5/6	11/5/2010	M22	MR	860/750		67	63	62	62	60	68	68	69	70	60	P	FF	TX/TX
							61	62	65	68	63								
DS-4	P-8/9	11/5/2010	M22	MR	860/750		62	63	56	57	59	63	60	61	58	64	P	FF	TX/TX
							59	58	59	66	56								
DS-5	P-10/11	11/8/2010	M22	MR	860/700		67	61	67	66	65	65	70	70	71	64	P	FF	TX/TX
							64	64	64	66	73								
DS-6	P-12/13	11/8/2010	M22	MR	860/700		58	52	56	64	56	63	63	65	60	57	P	FF	TX/TX
							54	57	59	56	59								
DS-7	P-14/15	11/9/2010	M22	MR	860/700		62	57	63	63	57	64	61	66	58	63	P	FF	TX/TX
							61	60	65	59	62								
DS-8	P-19/21	11/9/2010	M22	MR	860/700		67	65	64	65	62	69	66	64	63	65	P	FF	TX/TX
							64	62	63	61	62								
DS-9	P-25/26	11/9/2010	M8	CS	860/800		61	63	55	59	55	60	65	65	63	60	P	FF	TX/TX
							56	61	58	61	60								
DS-10	P-23/22	11/8/2010	M8	CS	860/800		61	65	67	63	60	68	69	69	64	63	P	FF	TX/TX
							62	59	63	60	49								
DS-11	P-33/35	11/9/2010	M22	MR	860/700		57	64	61	60	62	59	62	56	59	60	P	FF	TX/TX
							57	59	60	57	56								
DS-12	P-37/36	11/9/2010	M22	MR	860/700		57	63	60	53	60	55	61	63	67	65	P	FF	TX/TX
							55	52	58	58	59								
DS-13	P-10/22	11/8/2010	M22	MR	860/700		61	38	58	66	58	60	60	57	60	64	P	FF	TX/TX
							60	63	57	59	67								

Johnston Co. - Full Field QC Complete

HALLATON, INC.

1206 SPARKS ROAD, SPARKS, MD 21152
410-583-7700 Fax 410-583-7720

Geomembrane Seam Destructive Test Log

Project No.: 1043-16310
Project Name: Johnston Co
Start Date: 11/3/2010
Project Location: Smithfield, NC
Page: 2 of 5

Material: LLDPE

30 mil Thickness

Project Seam Requirements

Fusion:		Extrusion:	
Peel:	38	Peel:	34
Shear:	45	Shear:	45

DT#	Location	Date Removed	Welder ID		Wedge	Extruder	Seam Strength										Pass Fail	Tech ID	Remarks
			Machine	Operator	Temp/ Speed °F/fpm	Temp/ Preheat °F/°F	Peel (ppi) IN / OUT					Shear (ppi)							
							1	2	3	4	5	1	2	3	4	5			
DS-14	P-39/40	11/9/2010	M8	CS	860/900		51	50	64	52	56	50	53	55	54	53	P	GP	TX/TX
							56	55	54	54	49								
DS-15	P-41/42	11/9/2010	M22	MR	860/700		52	47	53	51	56	53	56	57	55	56	P	GP	TX/TX
							50	56	54	56	53								
DT-16	P-42/43	11/9/2010	M8	CS	860/800		54	54	54	50	53	53	50	49	48	51	P	GP	TX/TX
							40	42	49	36	57								
DT-17	P-44/45	11/9/2010	M8	CS	860/800		53	56	57	52	54	57	59	58	55	56	P	GP	TX/TX
							56	57	52	58	47								
DT-18	P-47/58	11/9/2010	M22	MR	860/680		58	53	54	52	54	59	55	55	53	54	P	GP	TX/TX
							56	46	56	55	52								
DT-19	P-48/49	11/9/2010	M22	MR	860/700		59	54	58	54	52	60	58	55	57	58	P	GP	TX/TX
							57	47	59	53	55								
DT-20	P-52/53	11/9/2010	M22	MR	860/680		58	56	56	55	57	57	59	58	59	55	P	GP	TX/TX
							59	55	58	53	56								
DT-21	P-56/57	11/9/2010	M8	CS	860/900		59	57	61	55	60	57	54	58	60	50	P	GP	TX/TX
							60	55	57	58	57								
DT-22	P-48/60	11/13/2010	M22	MR	860/700		55	56	59	57	55	60	59	61	57	56	P	GP	TX/TX
							55	58	53	55	59								
DT-23	P-61/63	11/13/2010	M8	CS	860/800		57	52	54	56	53	62	63	65	60	61	P	GP	TX/TX
							58	51	53	55	57								
DT-24	P-63/64	11/13/2010	M22	MR	860/700		69	58	62	60	61	61	60	60	63	59	P	GP	TX/TX
							58	61	60	57	58								
DT-25	P-67/68	11/13/2010	M8	CS	860/800		58	55	59	58	57	55	62	60	57	59	P	GP	TX/TX
							55	56	54	53	56								
DT-26	P-70/71	11/13/2010	M22	MR	860/700		56	59	53	55	58	58	54	60	59	57	P	GP	TX/TX
							55	54	56	57	55								

Johnston Co. - Full Field QC Complete

HALLATON, INC.

1206 SPARKS ROAD, SPARKS, MD 21152
410-583-7700 Fax 410-583-7720

Geomembrane Seam Destructive Test Log

Project No.: 1043-16310
Project Name: Johnston Co
Start Date: 11/3/2010
Project Location: Smithfield, NC
Page: 3 of 5

Material: LLDPE

30 mil Thickness

Project Seam Requirements

Fusion:		Extrusion:	
Peel:	38	Peel:	34
Shear:	45	Shear:	45

DT#	Location	Date Removed	Welder ID		Wedge	Extruder	Seam Strength										Pass Fail	Tech ID	Remarks
			Machine	Operator	Temp/ Speed °F/fpm	Temp/ Preheat °F/°F	Peel (ppi) IN / OUT					Shear (ppi)							
							1	2	3	4	5	1	2	3	4	5			
DT-27	P-71/73	11/13/2010	M8	CS	860/800		52	56	52	58	53	61	61	58	62	60	P	GP	TX/TX
							58	55	57	55	57								
DT-28	P-73/74	11/13/2010	M23	JO	850/700		55	62	57	60	55	55	57	60	55	58	P	GP	TX/TX
							58	60	58	59	58								
DT-29	P-75/77	11/13/2010	M8	CS	860/800		58	58	57	60	54	60	59	58	61	60	P	GP	TX/TX
							59	61	55	59	57								
DT-30	P-77/78	11/13/2010	M22	MR	860/700		56	56	57	55	58	57	56	59	60	61	P	GP	TX/TX
							52	57	57	53	59								
DT-31	P-79/81	11/13/2010	M22	MR	860/700		53	62	60	58	59	57	62	60	62	59	P	GP	TX/TX
							56	57	62	60	56								
DT-32	P-81/82	11/13/2010	M8	CS	850/800		59	59	56	55	57	60	60	58	59	61	P	GP	TX/TX
							60	52	53	53	58								
DT-33	P-82/83	11/13/2010	M22	MR	860/700		58	60	58	60	57	57	53	60	58	57	P	GP	TX/TX
							59	55	62	58	61								
DT-34	P-84/86	11/13/2010	M8	CS	850/800		58	46	64	58	60	58	57	61	60	58	P	GP	TX/TX
							60	57	54	59	57								
DT-35	P-85/87	11/13/2010	M8	CS	850/800		57	58	55	57	57	61	60	62	61	57	P	GP	TX/TX
							56	56	58	58	55								
DT-36	P-87/88	11/17/2010	M22	MR	860/700		55	57	58	57	59	50	57	56	60	59	P	FF	TX/TX
							58	52	38	43	38								
DT-37	P-88/99	11/17/2010	M8	CS	850/750		55	55	58	53	45	56	60	59	59	59	P	FF	TX/TX
							54	57	59	56	60								
DT-38	P-93/95	11/17/2010	M22	MR	860/700		55	56	49	55	54	58	54	62	58	57	P	FF	TX/TX
							54	53	53	60	54								
DT-39	P-95/96	11/17/2010	M8	CS	850/750		58	59	58	54	57	60	51	57	53	58	P	FF	TX/TX
							57	56	56	57	58								

Johnston Co. - Full Field QC Complete

HALLATON, INC.

1206 SPARKS ROAD, SPARKS, MD 21152
410-583-7700 Fax 410-583-7720

Geomembrane Seam Destructive Test Log

Project No.: 1043-16310
Project Name: Johnston Co
Start Date: 11/3/2010
Project Location: Smithfield, NC
Page: 4 of 5

Material: LLDPE

30 mil Thickness

Project Seam Requirements

Fusion:		Extrusion:	
Peel:	38	Peel:	34
Shear:	45	Shear:	45

DT#	Location	Date Removed	Welder ID		Wedge	Extruder	Seam Strength										Pass Fail	Tech ID	Remarks
			Machine	Operator	Temp/ Speed °F/fpm	Temp/ Preheat °F/°F	Peel (ppi) IN / OUT					Shear (ppi)							
							1	2	3	4	5	1	2	3	4	5			
DT-40	P-96/98	11/17/2010	M22	MR	860/700		51	50	51	51	55	54	54	58	57	55	P	FF	TX/TX
							53	52	52	49	50								
DT-41	P-99/100	11/17/2010	M8	CS	850/750		43	48	57	56	56	54	60	56	61	57	P	FF	TX/TX
							53	54	56	55	51								
DT-42	P-88/EL	11/17/2010	M22	MR	860/700		60	60	61	61	60	58	59	62	62	56	P	FF	TX/TX
							62	62	68	62	59								
DT-43	P-101/100	11/20/2010	M22	MR	860/700		62	59	63	61	68	77	69	73	78	74	P	FF	TX/TX
							64	63	68	64	68								
DT-44	P-101/102	11/20/2010	M8	CS	850/750		66	66	56	64	60	68	65	68	60	67	P	FF	TX/TX
							68	64	68	60	66								
DT-45	P-103/104	11/20/2010	M8	CS	850/750		64	69	67	64	65	70	68	78	73	72	P	FF	TX/TX
							64	62	64	63	63								
DT-46	P-108/106	11/20/2010	M22	MR	860/750		64	67	62	68	61	65	65	67	65	64	P	FF	TX/TX
							70	62	70	74	67								
DT-47	P-110/112	11/20/2010	M8	CS	850/800		61	64	61	62	61	62	68	65	66	58	P	FF	TX/TX
							61	64	64	63	60								
DT-48	P-115/116	11/20/2010	M22	MR	860/750		62	60	63	65	55	67	65	67	66	67	P	FF	TX/TX
							65	61	61	60	59								
DT-49	P-119/120	11/20/2010	M8	CS	850/800		61	58	63	64	60	66	65	63	65	64	P	FF	TX/TX
							57	61	62	59	63								
DT-50	P-127/128	11/20/2010	M23	JO	850/750		63	56	62	57	52	66	66	65	66	65	P	FF	TX/TX
							60	52	60	61	54								
DT-51	P-126/127	11/20/2010	M8	CS	850/800		55	60	59	57	55	67	64	60	66	63	P	FF	TX/TX
							58	49	53	60	60								
DT-52	P-133/134	11/20/2010	M23	JO	850/700		62	64	62	63	63	65	66	64	66	65	P	FF	TX/TX
							65	59	61	62	65								

Johnston Co. - Full Field QC Complete

HALLATON, INC.

1206 SPARKS ROAD, SPARKS, MD 21152
410-583-7700 Fax 410-583-7720

Geomembrane Seam Destructive Test Log

Project No.: 1043-16310
Project Name: Johnston Co
Start Date: 11/3/2010
Project Location: Smithfield, NC
Page: 5 of 5

Material: LLDPE

30 mil Thickness

Project Seam Requirements

Fusion:		Extrusion:	
Peel:	38	Peel:	34
Shear:	45	Shear:	45

DT#	Location	Date Removed	Welder ID		Wedge	Extruder	Seam Strength										Pass Fail	Tech ID	Remarks
			Machine	Operator	Temp/ Speed °F/fpm	Temp/ Preheat °F/°F	Peel (ppi) IN / OUT					Shear (ppi)							
							1	2	3	4	5	1	2	3	4	5			
DT-53	P-136/137	11/20/2010	M22	MR	860/750		60	66	63	65	59	57	58	65	65	63	P	FF	TX/TX
							60	59	62	63	64								
DT-54	P-116/EL	11/20/2010	M23	JO	860/750		65	67	62	65	64	70	74	75	70	73	P	FF	TX/TX
							62	66	63	62	66								

Johnston Co. - Full Field QC Complete

PEEL AND SHEAR TEST RESULTS
DESTRUCTIVE SEAM TESTING
ASTM D 6392 & 4437 w/NSF 54

geotechnics
INTEGRITY IN TESTING

CLIENT: RSG & ASSOCIATES
CLIENT PROJECT: JOHNSTON CO. PH. 4A CELL LF

CLIENT PROJ. NO.: NA
PROJECT NO.: 2009-610-11
LAB ID NO.: 2009-610-11-01
MATERIAL: 40 MIL LLDPE
SEAM TYPE: DOUBLE FUSION

SAMPLE I.D.: DS-1

PEEL ADHESION

REPLICATE No.	PEAK LOAD (lbs/in)	EPA BREAK CLASSIFICATION CODE	PEEL INCURSION (%)
OUTSIDE TRACK (WELD "A")			
1	70.3	SE1	<10
2	67.4	SE1	<10
3	69.2	SE1	<10
4	67.5	SE1	<10
5	68.1	SE1	<10
AVERAGE	**68.5**		
STD. DEV.	1.23		
INSIDE TRACK (WELD "B")			
1	70.4	SE1	<10
2	65.6	SE1	<10
3	68.8	SE1	<10
4	69.9	SE1	<10
5	62.8	SE1	<10
AVERAGE	**67.5**		
STD. DEV.	3.22		

BONDED SEAM (SHEAR) STRENGTH

REPLICATE No.	PEAK LOAD (lbs/in)	EPA BREAK CLASSIFICATION CODE
1	74.9	BRK
2	75.2	BRK
3	69.4	BRK
4	70.1	BRK
5	71.4	BRK
AVERAGE	**72.2**	
STD. DEV.	2.70	

CHECKED BY: CBM DATE: 5-28-09

2200 Westinghouse Boulevard • Suite 103 • Raleigh, NC 27604 • Phone (919) 876-0405 • Fax (919) 876-0460

PEEL AND SHEAR TEST RESULTS
DESTRUCTIVE SEAM TESTING

ASTM D 6392 & 4437 w/NSF 54

Geotechnics
INTEGRITY IN TESTING

CLIENT: RSG & ASSOCIATES
CLIENT PROJECT: JOHNSTON CO. PH. 4A CELL LF

CLIENT PROJ. NO.: NA
PROJECT NO.: 2009-610-11
LAB ID NO.: 2009-610-11-02
MATERIAL: 40 MIL LLDPE
SEAM TYPE: DOUBLE FUSION

SAMPLE I.D.: DS-2

PEEL ADHESION

REPLICATE No.	PEAK LOAD (lbs/in)	EPA BREAK CLASSIFICATION CODE	PEEL INCURSION (%)
OUTSIDE TRACK (WELD "A")			
1	66.2	SE1	<10
2	72.7	SE1	<10
3	66.8	SE1	<10
4	66.9	SE1	<10
5	68.4	SE1	<10
AVERAGE	**68.2**		
STD. DEV.	2.64		
INSIDE TRACK (WELD "B")			
1	66.6	SE1	<10
2	68.8	SE1	<10
3	69.1	SE1	<10
4	68.8	SE1	<10
5	68.2	SE1	<10
AVERAGE	**68.3**		
STD. DEV.	1.00		

BONDED SEAM (SHEAR) STRENGTH

REPLICATE No.	PEAK LOAD (lbs/in)	EPA BREAK CLASSIFICATION CODE
1	79.3	BRK
2	72.6	BRK
3	74.5	BRK
4	75.3	BRK
5	72.6	BRK
AVERAGE	**74.9**	
STD. DEV.	2.75	

CHECKED BY: GDM DATE: 5-28-09

2200 Westinghouse Boulevard • Suite 103 • Raleigh, NC 27604 • Phone (919) 876-0405 • Fax (919) 876-0460

PEEL AND SHEAR TEST RESULTS
DESTRUCTIVE SEAM TESTING

ASTM D 6392 & 4437 w/NSF 54

Geotechnics
INTEGRITY IN TESTING

CLIENT: RSG & ASSOCIATES
CLIENT PROJECT: JOHNSTON CO. PH. 4A CELL LF

CLIENT PROJ. NO.: NA
PROJECT NO.: 2009-610-11
LAB ID NO.: 2009-610-11-03
MATERIAL: 40 MIL LLDPE
SEAM TYPE: DOUBLE FUSION

SAMPLE I.D.: DS-3

PEEL ADHESION

REPLICATE No.	PEAK LOAD (lbs/in)	EPA BREAK CLASSIFICATION CODE	PEEL INCURSION (%)
OUTSIDE TRACK (WELD "A")			
1	65.2	SE1	<10
2	71.3	SE1	<10
3	71.6	SE1	<10
4	71.2	SE1	<10
5	69.8	SE1	<10
AVERAGE	**69.8**		
STD. DEV.	2.67		
INSIDE TRACK (WELD "B")			
1	68.5	SE1	<10
2	66.6	SE1	<10
3	67.1	SE1	<10
4	74.8	SE1	<10
5	70.7	SE1	<10
AVERAGE	**69.5**		
STD. DEV.	3.34		

BONDED SEAM (SHEAR) STRENGTH

REPLICATE No.	PEAK LOAD (lbs/in)	EPA BREAK CLASSIFICATION CODE
1	81.3	BRK
2	88.8	BRK
3	79.2	BRK
4	76.1	BRK
5	80.3	BRK
AVERAGE	**81.1**	
STD. DEV.	4.71	

CHECKED BY: GBM DATE: 5-28-09

2200 Westinghouse Boulevard • Suite 103 • Raleigh, NC 27604 • Phone (919) 876-0405 • Fax (919) 876-0460

PEEL AND SHEAR TEST RESULTS
DESTRUCTIVE SEAM TESTING
ASTM D 6392 & 4437 w/NSF 54

geotechnics
INTEGRITY IN TESTING

CLIENT: RSG & ASSOCIATES
CLIENT PROJECT: JOHNSTON CO. PH. 4A CELL LF

CLIENT PROJ. NO.: NA
PROJECT NO.: 2009-610-11
LAB ID NO.: 2009-610-11-04
MATERIAL: 40 MIL LLDPE
SEAM TYPE: DOUBLE FUSION

SAMPLE I.D.: DS-4

PEEL ADHESION

REPLICATE No.	PEAK LOAD (lbs/in)	EPA BREAK CLASSIFICATION CODE	PEEL INCURSION (%)
OUTSIDE TRACK (WELD "A")			
1	69.4	SE1	<10
2	78.5	SE1	<10
3	71.1	SE1	<10
4	70.6	SE1	<10
5	70.5	SE1	<10
AVERAGE	**72.0**		
STD. DEV.	3.68		
INSIDE TRACK (WELD "B")			
1	73.9	SE1	<10
2	71.4	SE1	<10
3	78.1	SE1	<10
4	70.9	SE1	<10
5	75.7	SE1	<10
AVERAGE	**74.0**		
STD. DEV.	3.00		

BONDED SEAM (SHEAR) STRENGTH

REPLICATE No.	PEAK LOAD (lbs/in)	EPA BREAK CLASSIFICATION CODE
1	77.0	BRK
2	82.2	BRK
3	79.0	BRK
4	83.5	BRK
5	82.9	BRK
AVERAGE	**80.9**	
STD. DEV.	2.80	

CHECKED BY: CAM DATE: 5-28-09

2200 Westinghouse Boulevard • Suite 103 • Raleigh, NC 27604 • Phone (919) 876-0405 • Fax (919) 876-0460

PEEL AND SHEAR TEST RESULTS
DESTRUCTIVE SEAM TESTING

ASTM D 6392 & 4437 w/NSF 54

geotechnics
INTEGRITY IN TESTING

CLIENT: RSG & ASSOCIATES
CLIENT PROJECT: JOHNSTON CO. PH. 4A CELL LF

CLIENT PROJ. NO.: NA
PROJECT NO.: 2009-610-11
LAB ID NO.: 2009-610-11-05
MATERIAL: 40 MIL LLDPE
SEAM TYPE: DOUBLE FUSION

SAMPLE I.D.: DS-5

PEEL ADHESION

REPLICATE No.	PEAK LOAD (lbs/in)	EPA BREAK CLASSIFICATION CODE	PEEL INCURSION (%)
OUTSIDE TRACK (WELD "A")			
1	73.2	SE1	<10
2	72.4	SE1	<10
3	68.5	SE1	<10
4	73.5	SE1	<10
5	69.1	SE1	<10
AVERAGE	**71.3**		
STD. DEV.	2.36		
INSIDE TRACK (WELD "B")			
1	68.3	SE1	<10
2	71.2	SE1	<10
3	70.3	SE1	<10
4	75.0	SE1	<10
5	72.1	SE1	<10
AVERAGE	**71.4**		
STD. DEV.	2.47		

BONDED SEAM (SHEAR) STRENGTH

REPLICATE No.	PEAK LOAD (lbs/in)	EPA BREAK CLASSIFICATION CODE
1	82.4	BRK
2	79.8	BRK
3	80.9	BRK
4	83.5	BRK
5	80.6	BRK
AVERAGE	**81.4**	
STD. DEV.	1.49	

CHECKED BY: GBM DATE: 5-28-09

2200 Westinghouse Boulevard • Suite 103 • Raleigh, NC 27604 • Phone (919) 876-0405 • Fax (919) 876-0460

PEEL AND SHEAR TEST RESULTS
DESTRUCTIVE SEAM TESTING

ASTM D 6392 & 4437 w/NSF 54

geotechnics
INTEGRITY IN TESTING

CLIENT: RSG & ASSOCIATES
CLIENT PROJECT: JOHNSTON CO. PH. 4A CELL LF

CLIENT PROJ. NO.: NA
PROJECT NO.: 2009-610-11
LAB ID NO.: 2009-610-11-06
MATERIAL: 40 MIL LLDPE
SEAM TYPE: DOUBLE FUSION

SAMPLE I.D.: DS-6

PEEL ADHESION

REPLICATE No.	PEAK LOAD (lbs/in)	EPA BREAK CLASSIFICATION CODE	PEEL INCURSION (%)
OUTSIDE TRACK (WELD "A")			
1	71.5	SE1	<10
2	73.7	SE1	<10
3	66.9	SE1	<10
4	70.4	SE1	<10
5	70.8	SE1	<10
AVERAGE	**70.7**		
STD. DEV.	2.46		
INSIDE TRACK (WELD "B")			
1	68.9	SE1	<10
2	70.1	SE1	<10
3	70.2	SE1	<10
4	71.4	SE1	<10
5	69.8	SE1	<10
AVERAGE	**70.1**		
STD. DEV.	0.90		

BONDED SEAM (SHEAR) STRENGTH

REPLICATE No.	PEAK LOAD (lbs/in)	EPA BREAK CLASSIFICATION CODE
1	88.3	BRK
2	79.2	BRK
3	78.8	BRK
4	83.1	BRK
5	80.7	BRK
AVERAGE	**82.0**	
STD. DEV.	3.89	

CHECKED BY: GM DATE: 5-28-09

2200 Westinghouse Boulevard • Suite 103 • Raleigh, NC 27604 • Phone (919) 876-0405 • Fax (919) 876-0460

PEEL AND SHEAR TEST RESULTS
DESTRUCTIVE SEAM TESTING

ASTM D 6392 & 4437 w/NSF 54

Geotechnics
INTEGRITY IN TESTING

CLIENT: RSG & ASSOCIATES
CLIENT PROJECT: JOHNSTON CO. PH. 4A CELL LF

CLIENT PROJ. NO.: NA
PROJECT NO.: 2009-610-11
LAB ID NO.: 2009-610-11-07
MATERIAL: 40 MIL LLDPE
SEAM TYPE: DOUBLE FUSION

SAMPLE I.D.: DS-7

PEEL ADHESION

REPLICATE No.	PEAK LOAD (lbs/in)	EPA BREAK CLASSIFICATION CODE	PEEL INCURSION (%)
OUTSIDE TRACK (WELD "A")			
1	69.6	SE1	<10
2	74.4	SE1	<10
3	68.6	SE1	<10
4	70.7	SE1	<10
5	69.9	SE1	<10
AVERAGE	**70.6**		
STD. DEV.	2.23		
INSIDE TRACK (WELD "B")			
1	73.4	SE1	<10
2	72.7	SE1	<10
3	70.1	SE1	<10
4	73.1	SE1	<10
5	70.0	SE1	<10
AVERAGE	**71.9**		
STD. DEV.	1.67		

BONDED SEAM (SHEAR) STRENGTH

REPLICATE No.	PEAK LOAD (lbs/in)	EPA BREAK CLASSIFICATION CODE
1	84.5	BRK
2	80.2	BRK
3	77.9	BRK
4	81.3	BRK
5	84.5	BRK
AVERAGE	**81.7**	
STD. DEV.	2.85	

CHECKED BY: GEM DATE: 5-28-09

2200 Westinghouse Boulevard • Suite 103 • Raleigh, NC 27604 • Phone (919) 876-0405 • Fax (919) 876-0460

PEEL AND SHEAR TEST RESULTS
DESTRUCTIVE SEAM TESTING

ASTM D 6392 & 4437 w/NSF 54

geotechnics
INTEGRITY IN TESTING

CLIENT: RSG & ASSOCIATES
CLIENT PROJECT: JOHNSTON CO. PH. 4A CELL LF

CLIENT PROJ. NO.: NA
PROJECT NO.: 2009-610-12
LAB ID NO.: 2009-610-12-01
MATERIAL: 40 MIL LLDPE
SEAM TYPE: DOUBLE FUSION

SAMPLE I.D.: DS-8

PEEL ADHESION

REPLICATE No.	PEAK LOAD (lbs/in)	EPA BREAK CLASSIFICATION CODE	PEEL INCURSION (%)
OUTSIDE TRACK (WELD "A")			
1	72.1	SE1	<10
2	67.5	SE1	<10
3	68.8	SE1	<10
4	71.6	SE1	<10
5	67.5	SE1	<10
AVERAGE	**69.5**		
STD. DEV.	2.22		
INSIDE TRACK (WELD "B")			
1	70.9	SE1	<10
2	69.8	SE1	<10
3	71.1	SE1	<10
4	67.5	SE1	<10
5	69.1	SE1	<10
AVERAGE	**69.7**		
STD. DEV.	1.47		

BONDED SEAM (SHEAR) STRENGTH

REPLICATE No.	PEAK LOAD (lbs/in)	EPA BREAK CLASSIFICATION CODE
1	76.8	BRK
2	77.4	BRK
3	77.6	BRK
4	81.1	BRK
5	79.8	BRK
AVERAGE	**78.5**	
STD. DEV.	1.83	

CHECKED BY: GBM DATE: 6-1-09

2200 Westinghouse Boulevard • Suite 103 • Raleigh, NC 27604 • Phone (919) 876-0405 • Fax (919) 876-0460

PEEL AND SHEAR TEST RESULTS
DESTRUCTIVE SEAM TESTING

ASTM D 6392 & 4437 w/NSF 54

geotechnics
INTEGRITY IN TESTING

CLIENT: RICHARDSON SMITH GARDNER & ASSOC.
CLIENT PROJECT: JOHNSTON CO. PH 4A CELL 3

CLIENT PROJ. NO.: NA
PROJECT NO.: 2009-610-13
LAB ID NO.: 2009-610-13-01
MATERIAL: 40 MIL LLDPE
SEAM TYPE: DOUBLE FUSION

SAMPLE I.D.: DT-9

PEEL ADHESION

REPLICATE No.	PEAK LOAD (lbs/in)	EPA BREAK CLASSIFICATION CODE	PEEL INCURSION (%)
OUTSIDE TRACK (WELD "A")			
1	64.9	SE1	<10
2	71.8	SE1	<10
3	67.2	SE1	<10
4	65.9	SE1	<10
5	70.1	SE1	<10
AVERAGE	**68.0**		
STD. DEV.	2.89		
INSIDE TRACK (WELD "B")			
1	65.4	SE1	<10
2	70.4	SE1	<10
3	65.7	SE1	<10
4	63.4	SE1	<10
5	66.3	SE1	<10
AVERAGE	**66.2**		
STD. DEV.	2.57		

BONDED SEAM (SHEAR) STRENGTH

REPLICATE No.	PEAK LOAD (lbs/in)	EPA BREAK CLASSIFICATION CODE
1	73.4	BRK
2	77.5	BRK
3	72.8	BRK
4	70.4	BRK
5	75.4	BRK
AVERAGE	**73.9**	
STD. DEV.	2.69	

CHECKED BY: GM DATE: 6-8-09

2200 Westinghouse Boulevard • Suite 103 • Raleigh, NC 27604 • Phone (919) 876-0405 • Fax (919) 876-0460

PEEL AND SHEAR TEST RESULTS
DESTRUCTIVE SEAM TESTING

ASTM D 6392 & 4437 w/NSF 54

geotechnics
INTEGRITY IN TESTING

CLIENT: RSG & ASSOCIATES
CLIENT PROJECT: JOHNSTON CO. C&D LF AREA 1 CLOSURE

CLIENT PROJ. NO.:
PROJECT NO.: 2010-725-02
LAB ID NO.: 2010-725-02-01
MATERIAL: 30 MILL LLDPE
SEAM TYPE: DOUBLE FUSION

SAMPLE I.D.: DS-1

PEEL ADHESION

REPLICATE No.	PEAK LOAD (lbs/in)	EPA BREAK CLASSIFICATION CODE	PEEL INCURSION (%)
OUTSIDE TRACK (WELD "A")			
1	52.2	SE1	<10
2	48.7	SE1	<10
3	53.0	SE1	<10
4	48.9	SE1	<10
5	51.4	SE1	<10
AVERAGE	**50.8**		
STD. DEV.	1.95		
INSIDE TRACK (WELD "B")			
1	54.5	SE1	<10
2	48.9	SE1	<10
3	52.6	SE1	<10
4	61.1	SE1	<10
5	50.9	SE1	<10
AVERAGE	**53.6**		
STD. DEV.	4.68		

BONDED SEAM (SHEAR) STRENGTH

REPLICATE No.	PEAK LOAD (lbs/in)	EPA BREAK CLASSIFICATION CODE
1	60.8	BRK
2	58.6	BRK
3	61.4	BRK
4	55.4	BRK
5	55.5	BRK
AVERAGE	**58.3**	
STD. DEV.	2.84	

CHECKED BY: TMS DATE: 11.5.10

2200 Westinghouse Boulevard • Suite 103 • Raleigh, NC 27604 • Phone (919) 876-0405 • Fax (919) 876-0460 • www.geotechnics.net

PEEL AND SHEAR TEST RESULTS
DESTRUCTIVE SEAM TESTING

ASTM D 6392 & 4437 w/NSF 54

Geotechnics
INTEGRITY IN TESTING

CLIENT: RSG & ASSOCIATES
CLIENT PROJECT: JOHNSTON CO. C&D LF AREA 1 CLOSURE

CLIENT PROJ. NO.:
PROJECT NO.: 2010-725-02
LAB ID NO.: 2010-725-02-02
MATERIAL: 30 MILL LLDPE
SEAM TYPE: DOUBLE FUSION

SAMPLE I.D.: DS-2

PEEL ADHESION

REPLICATE No.	PEAK LOAD (lbs/in)	EPA BREAK CLASSIFICATION CODE	PEEL INCURSION (%)
OUTSIDE TRACK (WELD "A")			
1	56.7	SE1	<10
2	52.5	SE1	<10
3	54.7	SE1	<10
4	53.4	SE1	<10
5	54.5	SE1	<10
AVERAGE	**54.4**		
STD. DEV.	1.58		
INSIDE TRACK (WELD "B")			
1	50.5	SE1	<10
2	48.2	SE1	<10
3	53.0	SE1	<10
4	54.5	SE1	<10
5	51.9	SE1	<10
AVERAGE	**51.6**		
STD. DEV.	2.41		

BONDED SEAM (SHEAR) STRENGTH

REPLICATE No.	PEAK LOAD (lbs/in)	EPA BREAK CLASSIFICATION CODE
1	58.6	BRK
2	59.1	BRK
3	59.0	BRK
4	61.1	BRK
5	59.8	BRK
AVERAGE	**59.5**	
STD. DEV.	0.98	

CHECKED BY: TMS DATE: 11.5.10

C:\My Documents\EXCEL\Templates\[HDP&S-DFusion.xls]Sheet1
\\SERVER\Data Drive\2010 PROJECTS\2010-725 RSG JOHNSTON\[2010-725-02-01 P 2010-725-02-02

11/5/2010

PEEL AND SHEAR TEST RESULTS
DESTRUCTIVE SEAM TESTING

ASTM D 6392 & 4437 w/NSF 54

geotechnics
INTEGRITY IN TESTING

CLIENT: RSG & ASSOCIATES
CLIENT PROJECT: JOHNSTON CO. C&D LF AREA 1 CLOSURE

CLIENT PROJ. NO.:
PROJECT NO.: 2010-725-02
LAB ID NO.: 2010-725-02-03
MATERIAL: 30 MILL LLDPE
SEAM TYPE: DOUBLE FUSION

SAMPLE I.D.: DS-3

PEEL ADHESION

REPLICATE No.	PEAK LOAD (lbs/in)	EPA BREAK CLASSIFICATION CODE	PEEL INCURSION (%)
OUTSIDE TRACK (WELD "A")			
1	51.6	SE1	<10
2	53.1	SE1	<10
3	53.4	SE1	<10
4	51.7	SE1	<10
5	56.7	SE1	<10
AVERAGE	**53.3**		
STD. DEV.	2.07		
INSIDE TRACK (WELD "B")			
1	55.1	SE1	<10
2	55.7	SE1	<10
3	56.0	SE1	<10
4	51.8	SE1	<10
5	56.3	SE1	<10
AVERAGE	**55.0**		
STD. DEV.	1.83		

BONDED SEAM (SHEAR) STRENGTH

REPLICATE No.	PEAK LOAD (lbs/in)	EPA BREAK CLASSIFICATION CODE
1	58.4	BRK
2	63.9	BRK
3	60.6	BRK
4	58.6	BRK
5	61.0	BRK
AVERAGE	**60.5**	
STD. DEV.	2.23	

CHECKED BY: TMS DATE: 11.5.10

2200 Westinghouse Boulevard • Suite 103 • Raleigh, NC 27604 • Phone (919) 876-0405 • Fax (919) 876-0460 • www.geotechnics.net

PEEL AND SHEAR TEST RESULTS
DESTRUCTIVE SEAM TESTING

ASTM D 6392 & 4437 w/NSF 54

geotechnics
INTEGRITY IN TESTING

CLIENT: RSG & ASSOCIATES
CLIENT PROJECT: JOHNSTON CO. C&D LF AREA 1 CLOSURE

CLIENT PROJ. NO.:
PROJECT NO.: 2010-725-02
LAB ID NO.: 2010-725-02-04
MATERIAL: 30 MILL LLDPE
SEAM TYPE: DOUBLE FUSION

SAMPLE I.D.: DS-4

PEEL ADHESION

REPLICATE No.	PEAK LOAD (lbs/in)	EPA BREAK CLASSIFICATION CODE	PEEL INCURSION (%)
OUTSIDE TRACK (WELD "A")			
1	50.6	SE1	<10
2	53.0	SE1	<10
3	50.9	SE1	<10
4	51.4	SE1	<10
5	53.2	SE1	<10
AVERAGE	**51.8**		
STD. DEV.	1.20		
INSIDE TRACK (WELD "B")			
1	54.1	SE1	<10
2	56.2	SE1	<10
3	55.6	SE1	<10
4	56.1	SE1	<10
5	57.1	SE1	<10
AVERAGE	**55.8**		
STD. DEV.	1.10		

BONDED SEAM (SHEAR) STRENGTH

REPLICATE No.	PEAK LOAD (lbs/in)	EPA BREAK CLASSIFICATION CODE
1	65.2	BRK
2	56.9	BRK
3	62.1	BRK
4	58.3	BRK
5	60.7	BRK
AVERAGE	**60.6**	
STD. DEV.	3.26	

CHECKED BY: TMS DATE: 11.5.10

C:\My Documents\EXCEL\Templates\[HDP&S-DFusion.xls]Sheet1

\\SERVER\Data Drive\2010 PROJECTS\2010-725 RSG JOHNSTON\[2010-725-02-03 P 2010-725-02-04

11/5/2010

PEEL AND SHEAR TEST RESULTS
DESTRUCTIVE SEAM TESTING

ASTM D 6392 & 4437 w/NSF 54

geotechnics
INTEGRITY IN TESTING

CLIENT: RSG & ASSOCIATES
CLIENT PROJECT: JOHNSTON CO. C&D LF AREA 1 CLOSURE

CLIENT PROJ. NO.:
PROJECT NO.: 2010-725-03
LAB ID NO.: 2010-725-03-01
MATERIAL: 30 MILL LLDPE
SEAM TYPE: DOUBLE FUSION

SAMPLE I.D.: DS-5

PEEL ADHESION

REPLICATE No.	PEAK LOAD (lbs/in)	EPA BREAK CLASSIFICATION CODE	PEEL INCURSION (%)
OUTSIDE TRACK (WELD "A")			
1	43.6	SE1	<10
2	54.7	SE1	<10
3	56.4	SE1	<10
4	55.6	SE1	<10
5	58.3	SE1	<10
AVERAGE	**53.7**		
STD. DEV.	5.81		
INSIDE TRACK (WELD "B")			
1	53.7	SE1	<10
2	57.5	SE1	<10
3	55.7	SE1	<10
4	55.3	SE1	<10
5	56.5	SE1	<10
AVERAGE	**55.7**		
STD. DEV.	1.42		

BONDED SEAM (SHEAR) STRENGTH

REPLICATE No.	PEAK LOAD (lbs/in)	EPA BREAK CLASSIFICATION CODE
1	60.1	BRK
2	57.4	BRK
3	61.1	BRK
4	62.6	BRK
5	65.4	BRK
AVERAGE	**61.3**	
STD. DEV.	2.97	

CHECKED BY: GAM DATE: 11-11-10

2200 Westinghouse Boulevard • Suite 103 • Raleigh, NC 27604 • Phone (919) 876-0405 • Fax (919) 876-0460 • www.geotechnics.net

PEEL AND SHEAR TEST RESULTS
DESTRUCTIVE SEAM TESTING

ASTM D 6392 & 4437 w/NSF 54

geotechnics
INTEGRITY IN TESTING

CLIENT: RSG & ASSOCIATES
CLIENT PROJECT: JOHNSTON CO. C&D LF AREA 1 CLOSURE

CLIENT PROJ. NO.:
PROJECT NO.: 2010-725-03
LAB ID NO.: 2010-725-03-02
MATERIAL: 30 MILL LLDPE
SEAM TYPE: DOUBLE FUSION

SAMPLE I.D.: DS-6

PEEL ADHESION

REPLICATE No.	PEAK LOAD (lbs/in)	EPA BREAK CLASSIFICATION CODE	PEEL INCURSION (%)
OUTSIDE TRACK (WELD "A")			
1	53.7	SE1	<10
2	60.4	SE1	<10
3	60.2	SE1	<10
4	60.1	SE1	<10
5	55.9	SE1	<10
AVERAGE	**58.1**		
STD. DEV.	3.08		
INSIDE TRACK (WELD "B")			
1	68.2	SE1	<10
2	63.2	SE1	<10
3	47.4	SE1	<10
4	53.1	SE1	<10
5	56.8	SE1	<10
AVERAGE	**57.7**		
STD. DEV.	8.19		

BONDED SEAM (SHEAR) STRENGTH

REPLICATE No.	PEAK LOAD (lbs/in)	EPA BREAK CLASSIFICATION CODE
1	69.7	BRK
2	71.8	BRK
3	65.1	BRK
4	64.8	BRK
5	66.6	BRK
AVERAGE	**67.6**	
STD. DEV.	3.05	

CHECKED BY: Gen DATE: 11-11-10

C:\My Documents\EXCEL\Templates\[HDP&S-DFusion.xls]Sheet1

\\Server\data drive\2010 PROJECTS\2010-725 RSG JOHNSTON\[2010-725-03-02 PEEL 2010-725-03-02 11/11/2010

PEEL AND SHEAR TEST RESULTS
DESTRUCTIVE SEAM TESTING
ASTM D 6392 & 4437 w/NSF 54

geotechnics
INTEGRITY IN TESTING

CLIENT: RSG & ASSOCIATES
CLIENT PROJECT: JOHNSTON CO. C&D LF AREA 1 CLOSURE

CLIENT PROJ. NO.:
PROJECT NO.: 2010-725-03
LAB ID NO.: 2010-725-03-03
MATERIAL: 30 MILL LLDPE
SEAM TYPE: DOUBLE FUSION

SAMPLE I.D.: DS-7

PEEL ADHESION

REPLICATE No.	PEAK LOAD (lbs/in)	EPA BREAK CLASSIFICATION CODE	PEEL INCURSION (%)
OUTSIDE TRACK (WELD "A")			
1	58.3	SE1	<10
2	58.1	SE1	<10
3	53.3	SE1	<10
4	57.4	SE1	<10
5	57.4	SE1	<10
AVERAGE	**56.9**		
STD. DEV.	2.05		
INSIDE TRACK (WELD "B")			
1	60.3	SE1	<10
2	58.0	SE1	<10
3	56.2	SE1	<10
4	56.7	SE1	<10
5	54.1	SE1	<10
AVERAGE	**57.1**		
STD. DEV.	2.29		

BONDED SEAM (SHEAR) STRENGTH

REPLICATE No.	PEAK LOAD (lbs/in)	EPA BREAK CLASSIFICATION CODE
1	63.5	BRK
2	65.9	BRK
3	61.9	BRK
4	56.2	BRK
5	62.2	BRK
AVERAGE	**61.9**	
STD. DEV.	3.58	

CHECKED BY: GEM DATE: 11-11-10

C:\My Documents\EXCEL\Templates\[HDP&S-DFusion.xls]Sheet1
\\Server\data drive\2010 PROJECTS\2010-725 RSG JOHNSTON\[2010-725-03-03 PEEl 2010-725-03-03 11/11/2010

PEEL AND SHEAR TEST RESULTS
DESTRUCTIVE SEAM TESTING

ASTM D 6392 & 4437 w/NSF 54

geotechnics
INTEGRITY IN TESTING

CLIENT: RSG & ASSOCIATES
CLIENT PROJECT: JOHNSTON CO. C&D LF AREA 1 CLOSURE

CLIENT PROJ. NO.:
PROJECT NO.: 2010-725-03
LAB ID NO.: 2010-725-03-04
MATERIAL: 30 MILL LLDPE
SEAM TYPE: DOUBLE FUSION

SAMPLE I.D.: DS-8

PEEL ADHESION

REPLICATE No.	PEAK LOAD (lbs/in)	EPA BREAK CLASSIFICATION CODE	PEEL INCURSION (%)
OUTSIDE TRACK (WELD "A")			
1	56.4	SE1	<10
2	55.9	SE1	<10
3	56.3	SE1	<10
4	53.2	SE1	<10
5	61.0	SE1	<10
AVERAGE	**56.6**		
STD. DEV.	2.81		
INSIDE TRACK (WELD "B")			
1	57.6	SE1	<10
2	60.1	SE1	<10
3	62.0	SE1	<10
4	58.7	SE1	<10
5	57.1	SE1	<10
AVERAGE	**59.1**		
STD. DEV.	1.99		

BONDED SEAM (SHEAR) STRENGTH

REPLICATE No.	PEAK LOAD (lbs/in)	EPA BREAK CLASSIFICATION CODE
1	63.1	BRK
2	65.5	BRK
3	68.2	BRK
4	61.7	BRK
5	76.0	BRK
AVERAGE	**66.9**	
STD. DEV.	5.66	

CHECKED BY: GM DATE: 11-11-10

2200 Westinghouse Boulevard • Suite 103 • Raleigh, NC 27604 • Phone (919) 876-0405 • Fax (919) 876-0460 • www.geotechnics.net

PEEL AND SHEAR TEST RESULTS
DESTRUCTIVE SEAM TESTING
ASTM D 6392 & 4437 w/NSF 54

geotechnics
INTEGRITY IN TESTING

CLIENT: RSG & ASSOCIATES
CLIENT PROJECT: JOHNSTON CO. C&D LF AREA 1 CLOSURE

CLIENT PROJ. NO.:
PROJECT NO.: 2010-725-03
LAB ID NO.: 2010-725-03-17
MATERIAL: 30 MILL LLDPE
SEAM TYPE: DOUBLE FUSION

SAMPLE I.D.: DS-9

PEEL ADHESION

REPLICATE No.	PEAK LOAD (lbs/in)	EPA BREAK CLASSIFICATION CODE	PEEL INCURSION (%)
OUTSIDE TRACK (WELD "A")			
1	54.3	SE1	<10
2	50.1	SE1	<10
3	48.6	SE1	<10
4	51.2	SE1	<10
5	59.1	SE1	<10
AVERAGE	**52.7**		
STD. DEV.	4.16		
INSIDE TRACK (WELD "B")			
1	61.2	SE1	<10
2	58.9	SE1	<10
3	56.9	SE1	<10
4	61.2	SE1	<10
5	58.3	SE1	<10
AVERAGE	**59.3**		
STD. DEV.	1.88		

BONDED SEAM (SHEAR) STRENGTH

REPLICATE No.	PEAK LOAD (lbs/in)	EPA BREAK CLASSIFICATION CODE
1	65.1	BRK
2	62.3	BRK
3	59.9	BRK
4	63.4	BRK
5	64.7	BRK
AVERAGE	**63.1**	
STD. DEV.	2.09	

CHECKED BY: GEM DATE: 11-15-10

2200 Westinghouse Boulevard • Suite 103 • Raleigh, NC 27604 • Phone (919) 876-0405 • Fax (919) 876-0460 • www.geotechnics.net

PEEL AND SHEAR TEST RESULTS
DESTRUCTIVE SEAM TESTING
ASTM D 6392 & 4437 w/NSF 54

geotechnics
INTEGRITY IN TESTING

CLIENT: RSG & ASSOCIATES
CLIENT PROJECT: JOHNSTON CO. C&D LF AREA 1 CLOSURE

CLIENT PROJ. NO.:
PROJECT NO.: 2010-725-03
LAB ID NO.: 2010-725-03-05
MATERIAL: 30 MILL LLDPE
SEAM TYPE: DOUBLE FUSION

SAMPLE I.D.: DS-10

PEEL ADHESION

REPLICATE No.	PEAK LOAD (lbs/in)	EPA BREAK CLASSIFICATION CODE	PEEL INCURSION (%)
OUTSIDE TRACK (WELD "A")			
1	51.6	SE1	<10
2	53.2	SE1	<10
3	51.3	SE1	<10
4	52.1	SE1	<10
5	50.1	SE1	<10
AVERAGE	**51.7**		
STD. DEV.	1.13		
INSIDE TRACK (WELD "B")			
1	53.3	SE1	<10
2	55.0	SE1	<10
3	53.7	SE1	<10
4	51.9	SE1	<10
5	50.0	SE1	<10
AVERAGE	**52.8**		
STD. DEV.	1.91		

BONDED SEAM (SHEAR) STRENGTH

REPLICATE No.	PEAK LOAD (lbs/in)	EPA BREAK CLASSIFICATION CODE
1	54.3	BRK
2	57.1	BRK
3	60.1	BRK
4	55.6	BRK
5	58.0	BRK
AVERAGE	**57.0**	
STD. DEV.	2.23	

CHECKED BY: GEM DATE: 11-11-10

2200 Westinghouse Boulevard • Suite 103 • Raleigh, NC 27604 • Phone (919) 876-0405 • Fax (919) 876-0460 • www.geotechnics.net

PEEL AND SHEAR TEST RESULTS
DESTRUCTIVE SEAM TESTING
ASTM D 6392 & 4437 w/NSF 54

Geotechnics
INTEGRITY IN TESTING

CLIENT: RSG & ASSOCIATES
CLIENT PROJECT: JOHNSTON CO. C&D LF AREA 1 CLOSURE

CLIENT PROJ. NO.:
PROJECT NO.: 2010-725-03
LAB ID NO.: 2010-725-03-06
MATERIAL: 30 MILL LLDPE
SEAM TYPE: DOUBLE FUSION

SAMPLE I.D.: DS-11

PEEL ADHESION

REPLICATE No.	PEAK LOAD (lbs/in)	EPA BREAK CLASSIFICATION CODE	PEEL INCURSION (%)
OUTSIDE TRACK (WELD "A")			
1	54.3	SE1	<10
2	54.5	SE1	<10
3	57.3	SE1	<10
4	61.1	SE1	<10
5	52.7	SE1	<10
AVERAGE	**56.0**		
STD. DEV.	3.31		
INSIDE TRACK (WELD "B")			
1	56.0	SE1	<10
2	55.3	SE1	<10
3	61.6	SE1	<10
4	55.2	SE1	<10
5	57.7	SE1	<10
AVERAGE	**57.2**		
STD. DEV.	2.68		

BONDED SEAM (SHEAR) STRENGTH

REPLICATE No.	PEAK LOAD (lbs/in)	EPA BREAK CLASSIFICATION CODE
1	63.6	BRK
2	65.8	BRK
3	66.2	BRK
4	61.0	BRK
5	61.4	BRK
AVERAGE	**63.6**	
STD. DEV.	2.41	

CHECKED BY: GBM DATE: 11-11-10

C:\My Documents\EXCEL\Templates\[HDP&S-DFusion.xls]Sheet1
\\Server\data drive\2010 PROJECTS\2010-725 RSG JOHNSTON\[2010-725-03-06 PEEl 2010-725-03-06

11/11/2010

PEEL AND SHEAR TEST RESULTS
DESTRUCTIVE SEAM TESTING
ASTM D 6392 & 4437 w/NSF 54

geotechnics
INTEGRITY IN TESTING

CLIENT: RSG & ASSOCIATES
CLIENT PROJECT: JOHNSTON CO. C&D LF AREA 1 CLOSURE

CLIENT PROJ. NO.:
PROJECT NO.: 2010-725-03
LAB ID NO.: 2010-725-03-07
MATERIAL: 30 MILL LLDPE
SEAM TYPE: DOUBLE FUSION

SAMPLE I.D.: DS-12

PEEL ADHESION

REPLICATE No.	PEAK LOAD (lbs/in)	EPA BREAK CLASSIFICATION CODE	PEEL INCURSION (%)
OUTSIDE TRACK (WELD "A")			
1	61.2	SE1	<10
2	57.6	SE1	<10
3	58.4	SE1	<10
4	53.0	SE1	<10
5	54.3	SE1	<10
AVERAGE	**56.9**		
STD. DEV.	3.29		
INSIDE TRACK (WELD "B")			
1	56.3	SE1	<10
2	55.3	SE1	<10
3	57.3	SE1	<10
4	55.4	SE1	<10
5	53.6	SE1	<10
AVERAGE	**55.6**		
STD. DEV.	1.37		

BONDED SEAM (SHEAR) STRENGTH

REPLICATE No.	PEAK LOAD (lbs/in)	EPA BREAK CLASSIFICATION CODE
1	59.2	BRK
2	59.0	BRK
3	60.2	BRK
4	61.4	BRK
5	60.1	BRK
AVERAGE	**60.0**	
STD. DEV.	0.95	

CHECKED BY: GBM DATE: 11-11-10

2200 Westinghouse Boulevard • Suite 103 • Raleigh, NC 27604 • Phone (919) 876-0405 • Fax (919) 876-0460 • www.geotechnics.net

PEEL AND SHEAR TEST RESULTS
DESTRUCTIVE SEAM TESTING

ASTM D 6392 & 4437 w/NSF 54

geotechnics
INTEGRITY IN TESTING

CLIENT: RSG & ASSOCIATES
CLIENT PROJECT: JOHNSTON CO. C&D LF AREA 1 CLOSURE

CLIENT PROJ. NO.:
PROJECT NO.: 2010-725-03
LAB ID NO.: 2010-725-03-08
MATERIAL: 30 MILL LLDPE
SEAM TYPE: DOUBLE FUSION

SAMPLE I.D.: DS-13

PEEL ADHESION

REPLICATE No.	PEAK LOAD (lbs/in)	EPA BREAK CLASSIFICATION CODE	PEEL INCURSION (%)
OUTSIDE TRACK (WELD "A")			
1	60.0	SE1	<10
2	57.1	SE1	<10
3	55.3	SE1	<10
4	53.2	SE1	<10
5	56.3	SE1	<10
AVERAGE	**56.4**		
STD. DEV.	2.50		
INSIDE TRACK (WELD "B")			
1	55.5	SE1	<10
2	60.1	SE1	<10
3	57.4	SE1	<10
4	61.1	SE1	<10
5	55.8	SE1	<10
AVERAGE	**58.0**		
STD. DEV.	2.52		

BONDED SEAM (SHEAR) STRENGTH

REPLICATE No.	PEAK LOAD (lbs/in)	EPA BREAK CLASSIFICATION CODE
1	63.9	BRK
2	70.9	BRK
3	66.3	BRK
4	67.4	BRK
5	66.5	BRK
AVERAGE	**67.0**	
STD. DEV.	2.54	

CHECKED BY: GEM DATE: 11-16-10

C:\My Documents\EXCEL\Templates\[HDP&S-DFusion.xls]Sheet1
\\Server\data drive\2010 PROJECTS\2010-725 RSG JOHNSTON\[2010-725-03-08 PEEl 2010-725-03-08

11/11/2010

PEEL AND SHEAR TEST RESULTS
DESTRUCTIVE SEAM TESTING
ASTM D 6392 & 4437 w/NSF 54

geotechnics
INTEGRITY IN TESTING

CLIENT: RSG & ASSOCIATES
CLIENT PROJECT: JOHNSTON CO. C&D LF AREA 1 CLOSURE

CLIENT PROJ. NO.:
PROJECT NO.: 2010-725-03
LAB ID NO.: 2010-725-03-09
MATERIAL: 30 MILL LLDPE
SEAM TYPE: DOUBLE FUSION

SAMPLE I.D.: DS-14

PEEL ADHESION

REPLICATE No.	PEAK LOAD (lbs/in)	EPA BREAK CLASSIFICATION CODE	PEEL INCURSION (%)
OUTSIDE TRACK (WELD "A")			
1	60.0	SE1	<10
2	56.0	SE1	<10
3	51.1	SE1	<10
4	52.2	SE1	<10
5	55..1	SE1	<10
AVERAGE	**54.8**		
STD. DEV.	4.04		
INSIDE TRACK (WELD "B")			
1	60.0	SE1	<10
2	58.3	SE1	<10
3	59.2	SE1	<10
4	53.6	SE1	<10
5	56.8	SE1	<10
AVERAGE	**57.6**		
STD. DEV.	2.52		

BONDED SEAM (SHEAR) STRENGTH

REPLICATE No.	PEAK LOAD (lbs/in)	EPA BREAK CLASSIFICATION CODE
1	60.0	BRK
2	59.3	BRK
3	62.0	BRK
4	64.8	BRK
5	62.1	BRK
AVERAGE	**61.6**	
STD. DEV.	2.15	

CHECKED BY: GEM DATE: 11-11-10

2200 Westinghouse Boulevard • Suite 103 • Raleigh, NC 27604 • Phone (919) 876-0405 • Fax (919) 876-0460 • www.geotechnics.net

PEEL AND SHEAR TEST RESULTS
DESTRUCTIVE SEAM TESTING

ASTM D 6392 & 4437 w/NSF 54

geotechnics
INTEGRITY IN TESTING

CLIENT: RSG & ASSOCIATES
CLIENT PROJECT: JOHNSTON CO. C&D LF AREA 1 CLOSURE

CLIENT PROJ. NO.:
PROJECT NO.: 2010-725-03
LAB ID NO.: 2010-725-03-10
MATERIAL: 30 MILL LLDPE
SEAM TYPE: DOUBLE FUSION

SAMPLE I.D.: DS-15

PEEL ADHESION

REPLICATE No.	PEAK LOAD (lbs/in)	EPA BREAK CLASSIFICATION CODE	PEEL INCURSION (%)
OUTSIDE TRACK (WELD "A")			
1	53.4	SE1	<10
2	57.4	SE1	<10
3	54.6	SE1	<10
4	55.8	SE1	<10
5	55.2	SE1	<10
AVERAGE	**55.3**		
STD. DEV.	1.48		
INSIDE TRACK (WELD "B")			
1	63.4	SE1	<10
2	59.6	SE1	<10
3	61.2	SE1	<10
4	60.5	SE1	<10
5	60.0	SE1	<10
AVERAGE	**60.9**		
STD. DEV.	1.50		

BONDED SEAM (SHEAR) STRENGTH

REPLICATE No.	PEAK LOAD (lbs/in)	EPA BREAK CLASSIFICATION CODE
1	65.9	BRK
2	59.9	BRK
3	63.9	BRK
4	65.0	BRK
5	66.2	BRK
AVERAGE	**64.2**	
STD. DEV.	2.55	

CHECKED BY: GBM DATE: 11-11-10

2200 Westinghouse Boulevard • Suite 103 • Raleigh, NC 27604 • Phone (919) 876-0405 • Fax (919) 876-0460 • www.geotechnics.net

PEEL AND SHEAR TEST RESULTS
DESTRUCTIVE SEAM TESTING

ASTM D 6392 & 4437 w/NSF 54

geotechnics
INTEGRITY IN TESTING

CLIENT: RSG & ASSOCIATES
CLIENT PROJECT: JOHNSTON CO. C&D LF AREA 1 CLOSURE

CLIENT PROJ. NO.:
PROJECT NO.: 2010-725-03
LAB ID NO.: 2010-725-03-11
MATERIAL: 30 MILL LLDPE
SEAM TYPE: DOUBLE FUSION

SAMPLE I.D.: DS-16

PEEL ADHESION

REPLICATE No.	PEAK LOAD (lbs/in)	EPA BREAK CLASSIFICATION CODE	PEEL INCURSION (%)
OUTSIDE TRACK (WELD "A")			
1	55.1	SE1	<10
2	46.1	SE1	<10
3	51.3	SE1	<10
4	50.4	SE1	<10
5	49.0	SE1	<10
AVERAGE	**50.4**		
STD. DEV.	3.29		
INSIDE TRACK (WELD "B")			
1	58.4	SE1	<10
2	54.3	SE1	<10
3	57.6	SE1	<10
4	57.4	SE1	<10
5	58.7	SE1	<10
AVERAGE	**57.3**		
STD. DEV.	1.75		

BONDED SEAM (SHEAR) STRENGTH

REPLICATE No.	PEAK LOAD (lbs/in)	EPA BREAK CLASSIFICATION CODE
1	67.4	BRK
2	59.7	BRK
3	61.3	BRK
4	66.2	BRK
5	65.4	BRK
AVERAGE	**64.0**	
STD. DEV.	3.32	

CHECKED BY: GBM DATE: 11-11-10

C:\My Documents\EXCEL\Templates\[HDP&S-DFusion.xls]Sheet1

\\Server\data drive\2010 PROJECTS\2010-725 RSG JOHNSTON\[2010-725-03-11 PEEl 2010-725-03-11

11/11/2010

PEEL AND SHEAR TEST RESULTS
DESTRUCTIVE SEAM TESTING

ASTM D 6392 & 4437 w/NSF 54

Geotechnics
INTEGRITY IN TESTING

CLIENT: RSG & ASSOCIATES
CLIENT PROJECT: JOHNSTON CO. C&D LF AREA 1 CLOSURE

CLIENT PROJ. NO.:
PROJECT NO.: 2010-725-03
LAB ID NO.: 2010-725-03-12
MATERIAL: 30 MILL LLDPE
SEAM TYPE: DOUBLE FUSION

SAMPLE I.D.: DS-17

PEEL ADHESION

REPLICATE No.	PEAK LOAD (lbs/in)	EPA BREAK CLASSIFICATION CODE	PEEL INCURSION (%)
OUTSIDE TRACK (WELD "A")			
1	58.5	SE1	<10
2	60.7	SE1	<10
3	58.2	SE1	<10
4	57.6	SE1	<10
5	61.2	SE1	<10
AVERAGE	**59.2**		
STD. DEV.	1.60		
INSIDE TRACK (WELD "B")			
1	55.5	SE1	<10
2	60.7	SE1	<10
3	62.1	SE1	<10
4	59.8	SE1	<10
5	60.0	SE1	<10
AVERAGE	**59.6**		
STD. DEV.	2.47		

BONDED SEAM (SHEAR) STRENGTH

REPLICATE No.	PEAK LOAD (lbs/in)	EPA BREAK CLASSIFICATION CODE
1	60.9	BRK
2	60.3	BRK
3	61.9	BRK
4	62.4	BRK
5	66.1	BRK
AVERAGE	**62.3**	
STD. DEV.	2.27	

CHECKED BY: GEM DATE: 11-11-10

2200 Westinghouse Boulevard • Suite 103 • Raleigh, NC 27604 • Phone (919) 876-0405 • Fax (919) 876-0460 • www.geotechnics.net

PEEL AND SHEAR TEST RESULTS
DESTRUCTIVE SEAM TESTING
ASTM D 6392 & 4437 w/NSF 54

Geotechnics
INTEGRITY IN TESTING

CLIENT: RSG & ASSOCIATES
CLIENT PROJECT: JOHNSTON CO. C&D LF AREA 1 CLOSURE

CLIENT PROJ. NO.:
PROJECT NO.: 2010-725-03
LAB ID NO.: 2010-725-03-13
MATERIAL: 30 MILL LLDPE
SEAM TYPE: DOUBLE FUSION

SAMPLE I.D.: DS-18

PEEL ADHESION

REPLICATE No.	PEAK LOAD (lbs/in)	EPA BREAK CLASSIFICATION CODE	PEEL INCURSION (%)
OUTSIDE TRACK (WELD "A")			
1	63.4	SE1	<10
2	60.1	SE1	<10
3	60.5	SE1	<10
4	59.7	SE1	<10
5	62.1	SE1	<10
AVERAGE	**61.2**		
STD. DEV.	1.55		
INSIDE TRACK (WELD "B")			
1	57.3	SE1	<10
2	57.4	SE1	<10
3	58.6	SE1	<10
4	60.3	SE1	<10
5	59.6	SE1	<10
AVERAGE	**58.6**		
STD. DEV.	1.32		

BONDED SEAM (SHEAR) STRENGTH

REPLICATE No.	PEAK LOAD (lbs/in)	EPA BREAK CLASSIFICATION CODE
1	68.0	BRK
2	67.4	BRK
3	60.2	BRK
4	63.5	BRK
5	67.2	BRK
AVERAGE	**65.3**	
STD. DEV.	3.34	

CHECKED BY: GEM DATE: 11-11-10

2200 Westinghouse Boulevard • Suite 103 • Raleigh, NC 27604 • Phone (919) 876-0405 • Fax (919) 876-0460 • www.geotechnics.net

PEEL AND SHEAR TEST RESULTS
DESTRUCTIVE SEAM TESTING

ASTM D 6392 & 4437 w/NSF 54

Geotechnics
INTEGRITY IN TESTING

CLIENT: RSG & ASSOCIATES
CLIENT PROJECT: JOHNSTON CO. C&D LF AREA 1 CLOSURE

CLIENT PROJ. NO.:
PROJECT NO.: 2010-725-03
LAB ID NO.: 2010-725-03-14
MATERIAL: 30 MILL LLDPE
SEAM TYPE: DOUBLE FUSION

SAMPLE I.D.: DS-19

PEEL ADHESION

REPLICATE No.	PEAK LOAD (lbs/in)	EPA BREAK CLASSIFICATION CODE	PEEL INCURSION (%)
OUTSIDE TRACK (WELD "A")			
1	55.8	SE1	<10
2	53.4	SE1	<10
3	58.0	SE1	<10
4	51.3	SE1	<10
5	55.1	SE1	<10
AVERAGE	**54.7**		
STD. DEV.	2.53		
INSIDE TRACK (WELD "B")			
1	57.1	SE1	<10
2	57.2	SE1	<10
3	58.5	SE1	<10
4	60.1	SE1	<10
5	57.8	SE1	<10
AVERAGE	**58.1**		
STD. DEV.	1.23		

BONDED SEAM (SHEAR) STRENGTH

REPLICATE No.	PEAK LOAD (lbs/in)	EPA BREAK CLASSIFICATION CODE
1	66.7	BRK
2	64.0	BRK
3	62.2	BRK
4	63.4	BRK
5	61.7	BRK
AVERAGE	**63.6**	
STD. DEV.	1.96	

CHECKED BY: GEM DATE: 11-11-10

2200 Westinghouse Boulevard • Suite 103 • Raleigh, NC 27604 • Phone (919) 876-0405 • Fax (919) 876-0460 • www.geotechnics.net

PEEL AND SHEAR TEST RESULTS
DESTRUCTIVE SEAM TESTING

ASTM D 6392 & 4437 w/NSF 54

geotechnics
INTEGRITY IN TESTING

CLIENT: RSG & ASSOCIATES
CLIENT PROJECT: JOHNSTON CO. C&D LF AREA 1 CLOSURE

CLIENT PROJ. NO.:
PROJECT NO.: 2010-725-03
LAB ID NO.: 2010-725-03-15
MATERIAL: 30 MILL LLDPE
SEAM TYPE: DOUBLE FUSION

SAMPLE I.D.: DS-20

PEEL ADHESION

REPLICATE No.	PEAK LOAD (lbs/in)	EPA BREAK CLASSIFICATION CODE	PEEL INCURSION (%)
OUTSIDE TRACK (WELD "A")			
1	59.1	SE1	<10
2	64.7	SE1	<10
3	61.9	SE1	<10
4	62.1	SE1	<10
5	59.8	SE1	<10
AVERAGE	**61.5**		
STD. DEV.	2.20		
INSIDE TRACK (WELD "B")			
1	55.0	SE1	<10
2	53.4	SE1	<10
3	60.0	SE1	<10
4	59.1	SE1	<10
5	60.3	SE1	<10
AVERAGE	**57.6**		
STD. DEV.	3.15		

BONDED SEAM (SHEAR) STRENGTH

REPLICATE No.	PEAK LOAD (lbs/in)	EPA BREAK CLASSIFICATION CODE
1	54.3	BRK
2	62.5	BRK
3	66.1	BRK
4	59.8	BRK
5	62.3	BRK
AVERAGE	**61.0**	
STD. DEV.	4.37	

CHECKED BY: GCM DATE: 11-11-10

C:\My Documents\EXCEL\Templates\[HDP&S-DFusion.xls]Sheet1

\\Server\data drive\2010 PROJECTS\2010-725 RSG JOHNSTON\[2010-725-03-15 PEEl 2010-725-03-15

11/11/2010

PEEL AND SHEAR TEST RESULTS
DESTRUCTIVE SEAM TESTING

ASTM D 6392 & 4437 w/NSF 54

geotechnics
INTEGRITY IN TESTING

CLIENT: RSG & ASSOCIATES
CLIENT PROJECT: JOHNSTON CO. C&D LF AREA 1 CLOSURE

CLIENT PROJ. NO.:
PROJECT NO.: 2010-725-03
LAB ID NO.: 2010-725-03-16
MATERIAL: 30 MILL LLDPE
SEAM TYPE: DOUBLE FUSION

SAMPLE I.D.: DS-21

PEEL ADHESION

REPLICATE No.	PEAK LOAD (lbs/in)	EPA BREAK CLASSIFICATION CODE	PEEL INCURSION (%)
OUTSIDE TRACK (WELD "A")			
1	57.1	SE1	<10
2	60.4	SE1	<10
3	51.6	SE1	<10
4	53.4	SE1	<10
5	55.1	SE1	<10
AVERAGE	**55.5**		
STD. DEV.	3.40		
INSIDE TRACK (WELD "B")			
1	54.1	SE1	<10
2	56.5	SE1	<10
3	56.3	SE1	<10
4	58.1	SE1	<10
5	52.6	SE1	<10
AVERAGE	**55.5**		
STD. DEV.	2.17		

BONDED SEAM (SHEAR) STRENGTH

REPLICATE No.	PEAK LOAD (lbs/in)	EPA BREAK CLASSIFICATION CODE
1	61.6	BRK
2	58.6	BRK
3	63.4	BRK
4	61.7	BRK
5	62.5	BRK
AVERAGE	**61.6**	
STD. DEV.	1.81	

CHECKED BY: GEM DATE: 11-11-10

2200 Westinghouse Boulevard • Suite 103 • Raleigh, NC 27604 • Phone (919) 876-0405 • Fax (919) 876-0460 • www.geotechnics.net

PEEL AND SHEAR TEST RESULTS
DESTRUCTIVE SEAM TESTING

ASTM D 6392 & 4437 w/NSF 54

geotechnics
INTEGRITY IN TESTING

CLIENT: RICHARDSON SMITH GARDNER & ASSOCIATES, INC.
CLIENT PROJECT: JOHNSTON COUNTY LANDFILL
PROJECT NO.: L10096-03
LAB ID NO.: L10096-03-01
MATERIAL: 30 MIL LLDPE
SEAM TYPE: DOUBLE FUSION

SAMPLE I.D.: DS-22

PEEL ADHESION

REPLICATE No.	PEAK LOAD (lbs/in)	EPA BREAK CLASSIFICATION CODE	PEEL INCURSION (%)
OUTSIDE TRACK (WELD "A")			
1	54.8	SE1	<10
2	55.5	SE1	<10
3	54.3	SE1	<10
4	52.8	SE1	<10
5	51.8	SE1	<10
AVERAGE	**53.8**		
STD. DEV.	1.51		
INSIDE TRACK (WELD "B")			
1	56.0	SE1	<10
2	51.8	SE1	<10
3	52.8	SE1	<10
4	52.2	SE1	<10
5	56.4	SE1	<10
AVERAGE	**53.8**		
STD. DEV.	2.19		

BONDED SEAM (SHEAR) STRENGTH

REPLICATE No.	PEAK LOAD (lbs/in)	EPA BREAK CLASSIFICATION CODE
1	56.4	SE1
2	52.0	SE1
3	51.8	SE1
4	53.4	SE1
5	55.2	SE1
AVERAGE	**53.8**	
STD. DEV.	2.01	

CHECKED BY: J.O DATE: 11-16-10

C:\Excel\Templates\[HDP&S-DFusion.xls]Sheet1

\\GEOSERVER\Data Drive\Synthetics\2010 SYNTHETICS\096 - RSGA - JOHNSTON COUNTY LANDFILL\[L10096-03 DS-22 JOI

544 Braddock Avenue • East Pittsburgh, PA 15112 • 412-823-7600 • FAX 412-823-8999 • www.geotechnics.net

PEEL AND SHEAR TEST RESULTS
DESTRUCTIVE SEAM TESTING

ASTM D 6392 & 4437 w/NSF 54

geotechnics
INTEGRITY IN TESTING

CLIENT: RICHARDSON SMITH GARDNER & ASSOCIATES, INC.
CLIENT PROJECT: JOHNSTON COUNTY LANDFILL
PROJECT NO.: L10096-03
LAB ID NO.: L10096-03-02
MATERIAL: 30 MIL LLDPE
SEAM TYPE: DOUBLE FUSION

SAMPLE I.D.: DS-23

PEEL ADHESION

REPLICATE No.	PEAK LOAD (lbs/in)	EPA BREAK CLASSIFICATION CODE	PEEL INCURSION (%)
OUTSIDE TRACK (WELD "A")			
1	52.6	SE1	<10
2	51.9	SE1	<10
3	55.9	SE1	<10
4	55.2	SE1	<10
5	52.0	SE1	<10
AVERAGE	**53.5**		
STD. DEV.	1.89		
INSIDE TRACK (WELD "B")			
1	54.1	SE1	<10
2	55.8	SE1	<10
3	57.7	SE1	<10
4	54.7	SE1	<10
5	53.1	SE1	<10
AVERAGE	**55.1**		
STD. DEV.	1.76		

BONDED SEAM (SHEAR) STRENGTH

REPLICATE No.	PEAK LOAD (lbs/in)	EPA BREAK CLASSIFICATION CODE
1	54.6	SE1
2	53.7	SE1
3	53.6	SE1
4	53.8	SE1
5	53.8	SE1
AVERAGE	**53.9**	
STD. DEV.	0.40	

CHECKED BY: JO DATE: 11-16-10

C:\Excel\Templates\[HDP&S-DFusion.xls]Sheet1

\\GEOSERVER\Data Drive\Synthetics\2010 SYNTHETICS\096 - RSGA - JOHNSTON COUNTY LANDFILL\[L10096-03 DS-22 JOH

544 Braddock Avenue • East Pittsburgh, PA 15112 • 412-823-7600 • FAX 412-823-8999 • www.geotechnics.net

PEEL AND SHEAR TEST RESULTS
DESTRUCTIVE SEAM TESTING

ASTM D 6392 & 4437 w/NSF 54

geotechnics
INTEGRITY IN TESTING

CLIENT: RICHARDSON SMITH GARDNER & ASSOCIATES, INC.
CLIENT PROJECT: JOHNSTON COUNTY LANDFILL
PROJECT NO.: L10096-03
LAB ID NO.: L10096-03-03
MATERIAL: 30 MIL LLDPE
SEAM TYPE: DOUBLE FUSION

SAMPLE I.D.: DS-24

PEEL ADHESION

REPLICATE No.	PEAK LOAD (lbs/in)	EPA BREAK CLASSIFICATION CODE	PEEL INCURSION (%)
OUTSIDE TRACK (WELD "A")			
1	55.6	SE1	<10
2	54.5	SE1	<10
3	55.1	SE1	<10
4	54.1	SE1	<10
5	56.4	SE1	<10
AVERAGE	**55.1**		
STD. DEV.	0.91		
INSIDE TRACK (WELD "B")			
1	55.7	SE1	<10
2	53.7	SE1	<10
3	53.1	SE1	<10
4	53.9	SE1	<10
5	54.3	SE1	<10
AVERAGE	**54.1**		
STD. DEV.	0.97		

BONDED SEAM (SHEAR) STRENGTH

REPLICATE No.	PEAK LOAD (lbs/in)	EPA BREAK CLASSIFICATION CODE
1	58.6	SE1
2	58.1	SE1
3	54.6	SE1
4	54.3	SE1
5	56.9	SE1
AVERAGE	**56.5**	
STD. DEV.	1.97	

CHECKED BY: J.O DATE: 11-16-10

C:\Excel\Templates\[HDP&S-DFusion.xls]Sheet1

\\GEOSERVER\Data Drive\Synthetics\2010 SYNTHETICS\096 - RSGA - JOHNSTON COUNTY LANDFILL\[L10096-03 DS-23 JOH

544 Braddock Avenue • East Pittsburgh, PA 15112 • 412-823-7600 • FAX 412-823-8999 • www.geotechnics.net

PEEL AND SHEAR TEST RESULTS
DESTRUCTIVE SEAM TESTING

ASTM D 6392 & 4437 w/NSF 54

geotechnics
INTEGRITY IN TESTING

CLIENT: RICHARDSON SMITH GARDNER & ASSOCIATES, INC.
CLIENT PROJECT: JOHNSTON COUNTY LANDFILL
PROJECT NO.: L10096-03
LAB ID NO.: L10096-03-04
MATERIAL: 30 MIL LLDPE
SEAM TYPE: DOUBLE FUSION

SAMPLE I.D.: DS-25

PEEL ADHESION

REPLICATE No.	PEAK LOAD (lbs/in)	EPA BREAK CLASSIFICATION CODE	PEEL INCURSION (%)
OUTSIDE TRACK (WELD "A")			
1	52.0	SE1	<10
2	55.8	SE1	<10
3	51.6	SE1	<10
4	53.7	SE1	<10
5	53.0	SE1	<10
AVERAGE	**53.2**		
STD. DEV.	1.66		
INSIDE TRACK (WELD "B")			
1	56.0	SE1	<10
2	52.4	SE1	<10
3	51.2	SE1	<10
4	53.3	SE1	<10
5	52.8	SE1	<10
AVERAGE	**53.1**		
STD. DEV.	1.78		

BONDED SEAM (SHEAR) STRENGTH

REPLICATE No.	PEAK LOAD (lbs/in)	EPA BREAK CLASSIFICATION CODE
1	55.9	SE1
2	55.0	SE1
3	53.4	SE1
4	55.1	SE1
5	57.7	SE1
AVERAGE	**55.4**	
STD. DEV.	1.56	

CHECKED BY: J.O DATE: 11-16-10

544 Braddock Avenue • East Pittsburgh, PA 15112 • 412-823-7600 • FAX 412-823-8999 • www.geotechnics.net

PEEL AND SHEAR TEST RESULTS
DESTRUCTIVE SEAM TESTING

ASTM D 6392 & 4437 w/NSF 54

geotechnics
INTEGRITY IN TESTING

CLIENT: RICHARDSON SMITH GARDNER & ASSOCIATES, INC.
CLIENT PROJECT: JOHNSTON COUNTY LANDFILL
PROJECT NO.: L10096-03
LAB ID NO.: L10096-03-05
MATERIAL: 30 MIL LLDPE
SEAM TYPE: DOUBLE FUSION

SAMPLE I.D.: DS-26

PEEL ADHESION

REPLICATE No.	PEAK LOAD (lbs/in)	EPA BREAK CLASSIFICATION CODE	PEEL INCURSION (%)
OUTSIDE TRACK (WELD "A")			
1	53.4	SE1	<10
2	55.5	SE1	<10
3	52.1	SE1	<10
4	57.2	SE1	<10
5	53.4	SE1	<10
AVERAGE	**54.3**		
STD. DEV.	2.02		
INSIDE TRACK (WELD "B")			
1	53.8	SE1	<10
2	51.6	SE1	<10
3	53.7	SE1	<10
4	53.7	SE1	<10
5	55.3	SE1	<10
AVERAGE	**53.6**		
STD. DEV.	1.32		

BONDED SEAM (SHEAR) STRENGTH

REPLICATE No.	PEAK LOAD (lbs/in)	EPA BREAK CLASSIFICATION CODE
1	53.2	SE1
2	57.9	SE1
3	52.1	SE1
4	55.4	SE1
5	56.8	SE1
AVERAGE	**55.1**	
STD. DEV.	2.42	

CHECKED BY: J.O DATE: 11-16-10

C:\Excel\Templates\[HDP&S-DFusion.xls]Sheet1

\\GEOSERVER\Data Drive\Synthetics\2010 SYNTHETICS\096 - RSGA - JOHNSTON COUNTY LANDFILL\[L10096-03 DS-25 JOH

544 Braddock Avenue • East Pittsburgh, PA 15112 • 412-823-7600 • FAX 412-823-8999 • www.geotechnics.net

PEEL AND SHEAR TEST RESULTS
DESTRUCTIVE SEAM TESTING

ASTM D 6392 & 4437 w/NSF 54

geotechnics
INTEGRITY IN TESTING

CLIENT: RICHARDSON SMITH GARDNER & ASSOCIATES, INC.
CLIENT PROJECT: JOHNSTON COUNTY LANDFILL
PROJECT NO.: L10096-03
LAB ID NO.: L10096-03-06
MATERIAL: 30 MIL LLDPE
SEAM TYPE: DOUBLE FUSION

SAMPLE I.D.: DS-27

PEEL ADHESION

REPLICATE No.	PEAK LOAD (lbs/in)	EPA BREAK CLASSIFICATION CODE	PEEL INCURSION (%)
OUTSIDE TRACK (WELD "A")			
1	51.9	SE1	<10
2	55.1	SE1	<10
3	51.8	SE1	<10
4	53.5	SE1	<10
5	52.3	SE1	<10
AVERAGE	**52.9**		
STD. DEV.	1.39		
INSIDE TRACK (WELD "B")			
1	56.5	SE1	<10
2	53.4	SE1	<10
3	49.9	SE1	<10
4	48.7	SE1	<10
5	54.6	SE1	<10
AVERAGE	**52.6**		
STD. DEV.	3.25		

BONDED SEAM (SHEAR) STRENGTH

REPLICATE No.	PEAK LOAD (lbs/in)	EPA BREAK CLASSIFICATION CODE
1	54.9	SE1
2	53.0	SE1
3	56.1	SE1
4	53.7	SE1
5	55.3	SE1
AVERAGE	**54.6**	
STD. DEV.	1.24	

CHECKED BY: J.O DATE: 11-16-10

544 Braddock Avenue • East Pittsburgh, PA 15112 • 412-823-7600 • FAX 412-823-8999 • www.geotechnics.net

PEEL AND SHEAR TEST RESULTS
DESTRUCTIVE SEAM TESTING

ASTM D 6392 & 4437 w/NSF 54

geotechnics
INTEGRITY IN TESTING

CLIENT: RICHARDSON SMITH GARDNER & ASSOCIATES, INC.
CLIENT PROJECT: JOHNSTON COUNTY LANDFILL
PROJECT NO.: L10096-03
LAB ID NO.: L10096-03-07
MATERIAL: 30 MIL LLDPE
SEAM TYPE: DOUBLE FUSION

SAMPLE I.D.: DS-28

PEEL ADHESION

REPLICATE No.	PEAK LOAD (lbs/in)	EPA BREAK CLASSIFICATION CODE	PEEL INCURSION (%)
OUTSIDE TRACK (WELD "A")			
1	48.9	SE1	<10
2	52.3	SE1	<10
3	53.3	SE1	<10
4	53.9	SE1	<10
5	55.6	SE1	<10
AVERAGE	**52.8**		
STD. DEV.	2.49		
INSIDE TRACK (WELD "B")			
1	55.3	SE1	<10
2	54.8	SE1	<10
3	57.0	SE1	<10
4	55.2	SE1	<10
5	54.0	SE1	<10
AVERAGE	**55.3**		
STD. DEV.	1.10		

BONDED SEAM (SHEAR) STRENGTH

REPLICATE No.	PEAK LOAD (lbs/in)	EPA BREAK CLASSIFICATION CODE
1	57.7	SE1
2	56.9	SE1
3	53.6	SE1
4	55.2	SE1
5	58.1	SE1
AVERAGE	**56.3**	
STD. DEV.	1.87	

CHECKED BY: J.O DATE: 11-16-10

544 Braddock Avenue • East Pittsburgh, PA 15112 • 412-823-7600 • FAX 412-823-8999 • www.geotechnics.net

PEEL AND SHEAR TEST RESULTS
DESTRUCTIVE SEAM TESTING

ASTM D 6392 & 4437 w/NSF 54

Geotechnics
INTEGRITY IN TESTING

CLIENT: RICHARDSON SMITH GARDNER & ASSOCIATES, INC.
CLIENT PROJECT: JOHNSTON COUNTY LANDFILL
PROJECT NO.: L10096-03
LAB ID NO.: L10096-03-08
MATERIAL: 30 MIL LLDPE
SEAM TYPE: DOUBLE FUSION

SAMPLE I.D.: DS-29

PEEL ADHESION

REPLICATE No.	PEAK LOAD (lbs/in)	EPA BREAK CLASSIFICATION CODE	PEEL INCURSION (%)
OUTSIDE TRACK (WELD "A")			
1	53.3	SE1	<10
2	52.3	SE1	<10
3	55.1	SE1	<10
4	55.3	SE1	<10
5	50.9	SE1	<10
AVERAGE	**53.4**		
STD. DEV.	1.87		
INSIDE TRACK (WELD "B")			
1	50.1	SE1	<10
2	55.7	SE1	<10
3	53.9	SE1	<10
4	54.4	SE1	<10
5	53.5	SE1	<10
AVERAGE	**53.5**		
STD. DEV.	2.08		

BONDED SEAM (SHEAR) STRENGTH

REPLICATE No.	PEAK LOAD (lbs/in)	EPA BREAK CLASSIFICATION CODE
1	51.9	SE1
2	55.5	SE1
3	53.6	SE1
4	53.4	SE1
5	53.7	SE1
AVERAGE	**53.6**	
STD. DEV.	1.28	

CHECKED BY: J. O DATE: 11-16-10

C:\Excel\Templates\[HDP&S-DFusion.xls]Sheet1

\\GEOSERVER\Data Drive\Synthetics\2010 SYNTHETICS\096 - RSGA - JOHNSTON COUNTY LANDFILL\[L10096-03 DS-28 JOH L10096-03-08 11/16/2010

PEEL AND SHEAR TEST RESULTS
DESTRUCTIVE SEAM TESTING

ASTM D 6392 & 4437 w/NSF 54

geotechnics
INTEGRITY IN TESTING

CLIENT: RICHARDSON SMITH GARDNER & ASSOCIATES, INC.
CLIENT PROJECT: JOHNSTON COUNTY LANDFILL
PROJECT NO.: L10096-03
LAB ID NO.: L10096-03-09
MATERIAL: 30 MIL LLDPE
SEAM TYPE: DOUBLE FUSION

SAMPLE I.D.: DS-30

PEEL ADHESION

REPLICATE No.	PEAK LOAD (lbs/in)	EPA BREAK CLASSIFICATION CODE	PEEL INCURSION (%)
OUTSIDE TRACK (WELD "A")			
1	53.4	SE1	<10
2	52.0	SE1	<10
3	51.7	SE1	<10
4	52.3	SE1	<10
5	52.8	SE1	<10
AVERAGE	**52.4**		
STD. DEV.	0.67		
INSIDE TRACK (WELD "B")			
1	56.6	SE1	<10
2	52.3	SE1	<10
3	51.6	SE1	<10
4	54.7	SE1	<10
5	56.1	SE1	<10
AVERAGE	**54.3**		
STD. DEV.	2.23		

BONDED SEAM (SHEAR) STRENGTH

REPLICATE No.	PEAK LOAD (lbs/in)	EPA BREAK CLASSIFICATION CODE
1	54.1	SE1
2	54.3	SE1
3	54.3	SE1
4	52.6	SE1
5	50.6	SE1
AVERAGE	**53.2**	
STD. DEV.	1.61	

CHECKED BY: T.O DATE: 11-16-10

544 Braddock Avenue • East Pittsburgh, PA 15112 • 412-823-7600 • FAX 412-823-8999 • www.geotechnics.net

PEEL AND SHEAR TEST RESULTS
DESTRUCTIVE SEAM TESTING

ASTM D 6392 & 4437 w/NSF 54

Geotechnics
INTEGRITY IN TESTING

CLIENT: RICHARDSON SMITH GARDNER & ASSOCIATES, INC.
CLIENT PROJECT: JOHNSTON COUNTY LANDFILL
PROJECT NO.: L10096-03
LAB ID NO.: L10096-03-10
MATERIAL: 30 MIL LLDPE
SEAM TYPE: DOUBLE FUSION

SAMPLE I.D.: DS-31

PEEL ADHESION

REPLICATE No.	PEAK LOAD (lbs/in)	EPA BREAK CLASSIFICATION CODE	PEEL INCURSION (%)
OUTSIDE TRACK (WELD "A")			
1	51.9	SE1	<10
2	52.7	SE1	<10
3	51.5	SE1	<10
4	55.2	SE1	<10
5	54.7	SE1	<10
AVERAGE	**53.2**		
STD. DEV.	1.66		
INSIDE TRACK (WELD "B")			
1	56.2	SE1	<10
2	54.1	SE1	<10
3	53.9	SE1	<10
4	53.6	SE1	<10
5	52.9	SE1	<10
AVERAGE	**54.1**		
STD. DEV.	1.24		

BONDED SEAM (SHEAR) STRENGTH

REPLICATE No.	PEAK LOAD (lbs/in)	EPA BREAK CLASSIFICATION CODE
1	53.1	SE1
2	56.4	SE1
3	53.9	SE1
4	55.9	SE1
5	55.1	SE1
AVERAGE	**54.9**	
STD. DEV.	1.37	

CHECKED BY: J.O DATE: 11-16-10

544 Braddock Avenue • East Pittsburgh, PA 15112 • 412-823-7600 • FAX 412-823-8999 • www.geotechnics.net

PEEL AND SHEAR TEST RESULTS
DESTRUCTIVE SEAM TESTING

ASTM D 6392 & 4437 w/NSF 54

geotechnics
INTEGRITY IN TESTING

CLIENT: RICHARDSON SMITH GARDNER & ASSOCIATES, INC.
CLIENT PROJECT: JOHNSTON COUNTY LANDFILL
PROJECT NO.: L10096-03
LAB ID NO.: L10096-03-11
MATERIAL: 30 MIL LLDPE
SEAM TYPE: DOUBLE FUSION

SAMPLE I.D.: DS-32

PEEL ADHESION

REPLICATE No.	PEAK LOAD (lbs/in)	EPA BREAK CLASSIFICATION CODE	PEEL INCURSION (%)
OUTSIDE TRACK (WELD "A")			
1	54.5	SE1	<10
2	54.6	SE1	<10
3	52.3	SE1	<10
4	53.1	SE1	<10
5	53.2	SE1	<10
AVERAGE	**53.5**		
STD. DEV.	0.99		
INSIDE TRACK (WELD "B")			
1	55.7	SE1	<10
2	55.9	SE1	<10
3	54.9	SE1	<10
4	51.6	SE1	<10
5	53.0	SE1	<10
AVERAGE	**54.2**		
STD. DEV.	1.86		

BONDED SEAM (SHEAR) STRENGTH

REPLICATE No.	PEAK LOAD (lbs/in)	EPA BREAK CLASSIFICATION CODE
1	56.9	SE1
2	54.2	SE1
3	55.9	SE1
4	55.2	SE1
5	56.3	SE1
AVERAGE	**55.7**	
STD. DEV.	1.04	

CHECKED BY: J.O DATE: 11-16-10

544 Braddock Avenue • East Pittsburgh, PA 15112 • 412-823-7600 • FAX 412-823-8999 • www.geotechnics.net

PEEL AND SHEAR TEST RESULTS
DESTRUCTIVE SEAM TESTING

ASTM D 6392 & 4437 w/NSF 54

geotechnics
INTEGRITY IN TESTING

CLIENT: RICHARDSON SMITH GARDNER & ASSOCIATES, INC.
CLIENT PROJECT: JOHNSTON COUNTY LANDFILL
PROJECT NO.: L10096-03
LAB ID NO.: L10096-03-12
MATERIAL: 30 MIL LLDPE
SEAM TYPE: DOUBLE FUSION

SAMPLE I.D.: DS-33

PEEL ADHESION

REPLICATE No.	PEAK LOAD (lbs/in)	EPA BREAK CLASSIFICATION CODE	PEEL INCURSION (%)
OUTSIDE TRACK (WELD "A")			
1	53.1	SE1	<10
2	55.4	SE1	<10
3	53.7	SE1	<10
4	56.7	SE1	<10
5	54.4	SE1	<10
AVERAGE	**54.7**		
STD. DEV.	1.43		
INSIDE TRACK (WELD "B")			
1	52.6	SE1	<10
2	52.1	SE1	<10
3	56.2	SE1	<10
4	55.3	SE1	<10
5	53.9	SE1	<10
AVERAGE	**54.0**		
STD. DEV.	1.74		

BONDED SEAM (SHEAR) STRENGTH

REPLICATE No.	PEAK LOAD (lbs/in)	EPA BREAK CLASSIFICATION CODE
1	53.9	SE1
2	55.2	SE1
3	54.3	SE1
4	55.4	SE1
5	56.8	SE1
AVERAGE	**55.1**	
STD. DEV.	1.13	

CHECKED BY: JD DATE: 11-16-10

544 Braddock Avenue • East Pittsburgh, PA 15112 • 412-823-7600 • FAX 412-823-8999 • www.geotechnics.net

PEEL AND SHEAR TEST RESULTS
DESTRUCTIVE SEAM TESTING

ASTM D 6392 & 4437 w/NSF 54

geotechnics
INTEGRITY IN TESTING

CLIENT: RICHARDSON SMITH GARDNER & ASSOCIATES, INC.
CLIENT PROJECT: JOHNSTON COUNTY LANDFILL
PROJECT NO.: L10096-03
LAB ID NO.: L10096-03-13
MATERIAL: 30 MIL LLDPE
SEAM TYPE: DOUBLE FUSION

SAMPLE I.D.: DS-34

PEEL ADHESION

REPLICATE No.	PEAK LOAD (lbs/in)	EPA BREAK CLASSIFICATION CODE	PEEL INCURSION (%)
OUTSIDE TRACK (WELD "A")			
1	53.0	SE1	<10
2	53.0	SE1	<10
3	53.3	SE1	<10
4	52.6	SE1	<10
5	50.8	SE1	<10
AVERAGE	**52.5**		
STD. DEV.	1.00		
INSIDE TRACK (WELD "B")			
1	54.4	SE1	<10
2	56.1	SE1	<10
3	55.5	SE1	<10
4	53.9	SE1	<10
5	54.2	SE1	<10
AVERAGE	**54.8**		
STD. DEV.	0.94		

BONDED SEAM (SHEAR) STRENGTH

REPLICATE No.	PEAK LOAD (lbs/in)	EPA BREAK CLASSIFICATION CODE
1	55.9	SE1
2	54.2	SE1
3	56.3	SE1
4	56.2	SE1
5	56.2	SE1
AVERAGE	**55.8**	
STD. DEV.	0.88	

CHECKED BY: JO DATE: 11-16-10

C:\Excel\Templates\[HDP&S-DFusion.xls]Sheet1

\\GEOSERVER\Data Drive\Synthetics\2010 SYNTHETICS\096 - RSGA - JOHNSTON COUNTY LANDFILL\[L10096-03 DS-33 JOH

544 Braddock Avenue • East Pittsburgh, PA 15112 • 412-823-7600 • FAX 412-823-8999 • www.geotechnics.net

PEEL AND SHEAR TEST RESULTS
DESTRUCTIVE SEAM TESTING

ASTM D 6392 & 4437 w/NSF 54

geotechnics
INTEGRITY IN TESTING

CLIENT: RICHARDSON SMITH GARDNER & ASSOCIATES, INC.
CLIENT PROJECT: JOHNSTON COUNTY LANDFILL
PROJECT NO.: L10096-03
LAB ID NO.: L10096-03-14
MATERIAL: 30 MIL LLDPE
SEAM TYPE: DOUBLE FUSION

SAMPLE I.D.: DS-35

PEEL ADHESION

REPLICATE No.	PEAK LOAD (lbs/in)	EPA BREAK CLASSIFICATION CODE	PEEL INCURSION (%)
OUTSIDE TRACK (WELD "A")			
1	51.0	SE1	<10
2	50.3	SE1	<10
3	52.6	SE1	<10
4	56.1	SE1	<10
5	53.3	SE1	<10
AVERAGE	**52.7**		
STD. DEV.	2.27		
INSIDE TRACK (WELD "B")			
1	54.1	SE1	<10
2	53.1	SE1	<10
3	53.0	SE1	<10
4	49.0	SE1	<10
5	52.8	SE1	<10
AVERAGE	**52.4**		
STD. DEV.	1.97		

BONDED SEAM (SHEAR) STRENGTH

REPLICATE No.	PEAK LOAD (lbs/in)	EPA BREAK CLASSIFICATION CODE
1	56.8	SE1
2	55.7	SE1
3	53.3	SE1
4	54.7	SE1
5	55.1	SE1
AVERAGE	**55.1**	
STD. DEV.	1.29	

CHECKED BY: J.O DATE: 11-16-10

544 Braddock Avenue • East Pittsburgh, PA 15112 • 412-823-7600 • FAX 412-823-8999 • www.geotechnics.net

PEEL AND SHEAR TEST RESULTS
DESTRUCTIVE SEAM TESTING
ASTM D 6392 & 4437 w/NSF 54

geotechnics
INTEGRITY IN TESTING

CLIENT: RSG & ASSOCIATES
CLIENT PROJECT: JOHNSTON CO. C&D LF AREA 1 CLOSURE

CLIENT PROJ. NO.:
PROJECT NO.: 2010-725-04
LAB ID NO.: 2010-725-04-01
MATERIAL: 30 MILL LLDPE
SEAM TYPE: DOUBLE FUSION

SAMPLE I.D.: DS-36

PEEL ADHESION

REPLICATE No.	PEAK LOAD (lbs/in)	EPA BREAK CLASSIFICATION CODE	PEEL INCURSION (%)
OUTSIDE TRACK (WELD "A")			
1	57.8	SE1	<10
2	53.7	SE1	<10
3	60.0	SE1	<10
4	59.4	SE1	<10
5	59.9	SE1	<10
AVERAGE	**58.2**		
STD. DEV.	2.64		
INSIDE TRACK (WELD "B")			
1	59.1	SE1	<10
2	56.5	SE1	<10
3	57.9	SE1	<10
4	61.2	SE1	<10
5	60.7	SE1	<10
AVERAGE	**59.1**		
STD. DEV.	1.95		

BONDED SEAM (SHEAR) STRENGTH

REPLICATE No.	PEAK LOAD (lbs/in)	EPA BREAK CLASSIFICATION CODE
1	57.6	BRK
2	59.5	BRK
3	57.4	BRK
4	52.4	BRK
5	59.2	BRK
AVERAGE	**57.2**	
STD. DEV.	2.85	

CHECKED BY: GEM DATE: 11-18-10

C:\My Documents\EXCEL\Templates\[HDP&S-DFusion.xls]Sheet1
\\Server\data drive\2010 PROJECTS\2010-725 RSG JOHNSTON\[2010-725-04-01 PEEL 2010-725-04-01

11/18/2010

PEEL AND SHEAR TEST RESULTS
DESTRUCTIVE SEAM TESTING

ASTM D 6392 & 4437 w/NSF 54

geotechnics
INTEGRITY IN TESTING

CLIENT: RSG & ASSOCIATES
CLIENT PROJECT: JOHNSTON CO. C&D LF AREA 1 CLOSURE

CLIENT PROJ. NO.:
PROJECT NO.: 2010-725-04
LAB ID NO.: 2010-725-04-02
MATERIAL: 30 MILL LLDPE
SEAM TYPE: DOUBLE FUSION

SAMPLE I.D.: DS-37

PEEL ADHESION

REPLICATE No.	PEAK LOAD (lbs/in)	EPA BREAK CLASSIFICATION CODE	PEEL INCURSION (%)
OUTSIDE TRACK (WELD "A")			
1	54.6	SE1	<10
2	52.7	SE1	<10
3	58.4	SE1	<10
4	51.6	SE1	<10
5	53.7	SE1	<10
AVERAGE	**54.2**		
STD. DEV.	2.60		
INSIDE TRACK (WELD "B")			
1	56.5	SE1	<10
2	50.2	SE1	<10
3	61.3	SE1	<10
4	57.1	SE1	<10
5	58.1	SE1	<10
AVERAGE	**56.6**		
STD. DEV.	4.05		

BONDED SEAM (SHEAR) STRENGTH

REPLICATE No.	PEAK LOAD (lbs/in)	EPA BREAK CLASSIFICATION CODE
1	58.1	BRK
2	61.9	BRK
3	57.8	BRK
4	60.2	BRK
5	59.8	BRK
AVERAGE	**59.6**	
STD. DEV.	1.67	

CHECKED BY: GM DATE: 11-18-10

2200 Westinghouse Boulevard • Suite 103 • Raleigh, NC 27604 • Phone (919) 876-0405 • Fax (919) 876-0460 • www.geotechnics.net

PEEL AND SHEAR TEST RESULTS
DESTRUCTIVE SEAM TESTING
ASTM D 6392 & 4437 w/NSF 54

geotechnics
INTEGRITY IN TESTING

CLIENT: RSG & ASSOCIATES
CLIENT PROJECT: JOHNSTON CO. C&D LF AREA 1 CLOSURE

CLIENT PROJ. NO.:
PROJECT NO.: 2010-725-04
LAB ID NO.: 2010-725-04-03
MATERIAL: 30 MILL LLDPE
SEAM TYPE: DOUBLE FUSION

SAMPLE I.D.: DS-38

PEEL ADHESION

REPLICATE No.	PEAK LOAD (lbs/in)	EPA BREAK CLASSIFICATION CODE	PEEL INCURSION (%)
OUTSIDE TRACK (WELD "A")			
1	50.5	SE1	<10
2	48.2	SE1	<10
3	55.8	SE1	<10
4	45.6	SE1	<10
5	52.6	SE1	<10
AVERAGE	**50.5**		
STD. DEV.	3.93		
INSIDE TRACK (WELD "B")			
1	53.1	SE1	<10
2	51.7	SE1	<10
3	57.4	SE1	<10
4	49.1	SE1	<10
5	55.0	SE1	<10
AVERAGE	**53.3**		
STD. DEV.	3.16		

BONDED SEAM (SHEAR) STRENGTH

REPLICATE No.	PEAK LOAD (lbs/in)	EPA BREAK CLASSIFICATION CODE
1	64.9	BRK
2	58.5	BRK
3	65.0	BRK
4	60.5	BRK
5	62.3	BRK
AVERAGE	**62.2**	
STD. DEV.	2.82	

CHECKED BY: GEM DATE: 11-18-10

2200 Westinghouse Boulevard • Suite 103 • Raleigh, NC 27604 • Phone (919) 876-0405 • Fax (919) 876-0460 • www.geotechnics.net

PEEL AND SHEAR TEST RESULTS
DESTRUCTIVE SEAM TESTING

ASTM D 6392 & 4437 w/NSF 54

geotechnics
INTEGRITY IN TESTING

CLIENT: RSG & ASSOCIATES
CLIENT PROJECT: JOHNSTON CO. C&D LF AREA 1 CLOSURE

CLIENT PROJ. NO.:
PROJECT NO.: 2010-725-04
LAB ID NO.: 2010-725-04-04
MATERIAL: 30 MILL LLDPE
SEAM TYPE: DOUBLE FUSION

SAMPLE I.D.: DS-39

PEEL ADHESION

REPLICATE No.	PEAK LOAD (lbs/in)	EPA BREAK CLASSIFICATION CODE	PEEL INCURSION (%)
OUTSIDE TRACK (WELD "A")			
1	55.0	SE1	<10
2	60.0	SE1	<10
3	58.1	SE1	<10
4	48.9	SE1	<10
5	58.4	SE1	<10
AVERAGE	**56.1**		
STD. DEV.	4.40		
INSIDE TRACK (WELD "B")			
1	60.3	SE1	<10
2	56.7	SE1	<10
3	62.1	SE1	<10
4	56.1	SE1	<10
5	55.6	SE1	<10
AVERAGE	**58.2**		
STD. DEV.	2.87		

BONDED SEAM (SHEAR) STRENGTH

REPLICATE No.	PEAK LOAD (lbs/in)	EPA BREAK CLASSIFICATION CODE
1	62.2	BRK
2	62.3	BRK
3	58.6	BRK
4	61.6	BRK
5	56.4	BRK
AVERAGE	**60.2**	
STD. DEV.	2.62	

CHECKED BY: GEM DATE: 11-18-10

2200 Westinghouse Boulevard • Suite 103 • Raleigh, NC 27604 • Phone (919) 876-0405 • Fax (919) 876-0460 • www.geotechnics.net

PEEL AND SHEAR TEST RESULTS
DESTRUCTIVE SEAM TESTING
ASTM D 6392 & 4437 w/NSF 54

geotechnics
INTEGRITY IN TESTING

CLIENT: RSG & ASSOCIATES
CLIENT PROJECT: JOHNSTON CO. C&D LF AREA 1 CLOSURE

CLIENT PROJ. NO.:
PROJECT NO.: 2010-725-04
LAB ID NO.: 2010-725-04-05
MATERIAL: 30 MILL LLDPE
SEAM TYPE: DOUBLE FUSION

SAMPLE I.D.: DS-40

PEEL ADHESION

REPLICATE No.	PEAK LOAD (lbs/in)	EPA BREAK CLASSIFICATION CODE	PEEL INCURSION (%)
OUTSIDE TRACK (WELD "A")			
1	52.3	SE1	<10
2	55.6	SE1	<10
3	58.1	SE1	<10
4	56.2	SE1	<10
5	61.3	SE1	<10
AVERAGE	**56.7**		
STD. DEV.	3.31		
INSIDE TRACK (WELD "B")			
1	57.9	SE1	<10
2	52.9	SE1	<10
3	57.8	SE1	<10
4	56.3	SE1	<10
5	63.7	SE1	<10
AVERAGE	**57.7**		
STD. DEV.	3.91		

BONDED SEAM (SHEAR) STRENGTH

REPLICATE No.	PEAK LOAD (lbs/in)	EPA BREAK CLASSIFICATION CODE
1	60.6	BRK
2	59.9	BRK
3	58.8	BRK
4	63.9	BRK
5	62.8	BRK
AVERAGE	**61.2**	
STD. DEV.	2.10	

CHECKED BY: GBM DATE: 11-18-10

2200 Westinghouse Boulevard • Suite 103 • Raleigh, NC 27604 • Phone (919) 876-0405 • Fax (919) 876-0460 • www.geotechnics.net

PEEL AND SHEAR TEST RESULTS
DESTRUCTIVE SEAM TESTING

ASTM D 6392 & 4437 w/NSF 54

geotechnics
INTEGRITY IN TESTING

CLIENT: RSG & ASSOCIATES
CLIENT PROJECT: JOHNSTON CO. C&D LF AREA 1 CLOSURE

CLIENT PROJ. NO.:
PROJECT NO.: 2010-725-04
LAB ID NO.: 2010-725-04-06
MATERIAL: 30 MILL LLDPE
SEAM TYPE: DOUBLE FUSION

SAMPLE I.D.: DS-41

PEEL ADHESION

REPLICATE No.	PEAK LOAD (lbs/in)	EPA BREAK CLASSIFICATION CODE	PEEL INCURSION (%)
OUTSIDE TRACK (WELD "A")			
1	56.6	SE1	<10
2	57.2	SE1	<10
3	55.6	SE1	<10
4	57.8	SE1	<10
5	54.3	SE1	<10
AVERAGE	**56.3**		
STD. DEV.	1.38		
INSIDE TRACK (WELD "B")			
1	55.8	SE1	<10
2	58.9	SE1	<10
3	60.1	SE1	<10
4	57.6	SE1	<10
5	53.2	SE1	<10
AVERAGE	**57.1**		
STD. DEV.	2.71		

BONDED SEAM (SHEAR) STRENGTH

REPLICATE No.	PEAK LOAD (lbs/in)	EPA BREAK CLASSIFICATION CODE
1	63.5	BRK
2	63.0	BRK
3	59.7	BRK
4	56.6	BRK
5	61.7	BRK
AVERAGE	**60.9**	
STD. DEV.	2.82	

CHECKED BY: GBM DATE: 11-18-10

2200 Westinghouse Boulevard • Suite 103 • Raleigh, NC 27604 • Phone (919) 876-0405 • Fax (919) 876-0460 • www.geotechnics.net

PEEL AND SHEAR TEST RESULTS
DESTRUCTIVE SEAM TESTING
ASTM D 6392 & 4437 w/NSF 54

geotechnics
INTEGRITY IN TESTING

CLIENT: RSG & ASSOCIATES
CLIENT PROJECT: JOHNSTON CO. C&D LF AREA 1 CLOSURE

CLIENT PROJ. NO.:
PROJECT NO.: 2010-725-04
LAB ID NO.: 2010-725-04-07
MATERIAL: 30 MILL LLDPE
SEAM TYPE: DOUBLE FUSION

SAMPLE I.D.: DS-42

PEEL ADHESION

REPLICATE No.	PEAK LOAD (lbs/in)	EPA BREAK CLASSIFICATION CODE	PEEL INCURSION (%)
OUTSIDE TRACK (WELD "A")			
1	54.7	SE1	<10
2	52.6	SE1	<10
3	57.8	SE1	<10
4	52.9	SE1	<10
5	55.9	SE1	<10
AVERAGE	**54.8**		
STD. DEV.	2.16		
INSIDE TRACK (WELD "B")			
1	62.1	SE1	<10
2	58.9	SE1	<10
3	62.3	SE1	<10
4	56.3	SE1	<10
5	62.0	SE1	<10
AVERAGE	**60.3**		
STD. DEV.	2.65		

BONDED SEAM (SHEAR) STRENGTH

REPLICATE No.	PEAK LOAD (lbs/in)	EPA BREAK CLASSIFICATION CODE
1	62.0	BRK
2	67.4	BRK
3	62.4	BRK
4	57.8	BRK
5	66.1	BRK
AVERAGE	**63.1**	
STD. DEV.	3.78	

CHECKED BY: GEN DATE: 11-18-10

2200 Westinghouse Boulevard • Suite 103 • Raleigh, NC 27604 • Phone (919) 876-0405 • Fax (919) 876-0460 • www.geotechnics.net

PEEL AND SHEAR TEST RESULTS
DESTRUCTIVE SEAM TESTING

ASTM D 6392 & 4437 w/NSF 54

geotechnics
INTEGRITY IN TESTING

CLIENT: RICHARDSON SMITH GARDNER & ASSOCIATES, INC.
CLIENT PROJECT: JOHNSTON COUNTY LANDFILL
PROJECT NO.: L10096-04
LAB ID NO.: L10096-04-01
MATERIAL: 30 MIL LLDPE
SEAM TYPE: DOUBLE FUSION

SAMPLE I.D.: DS-43

PEEL ADHESION

REPLICATE No.	PEAK LOAD (lbs/in)	EPA BREAK CLASSIFICATION CODE	PEEL INCURSION (%)
OUTSIDE TRACK (WELD "A")			
1	51.5	SE1	<10
2	53.7	SE1	<10
3	53.6	SE1	<10
4	56.7	SE1	<10
5	52.8	SE1	<10
AVERAGE	**53.7**		
STD. DEV.	1.91		
INSIDE TRACK (WELD "B")			
1	51.9	SE1	<10
2	52.2	SE1	<10
3	58.1	SE1	<10
4	51.8	SE1	<10
5	55.1	SE1	<10
AVERAGE	**53.8**		
STD. DEV.	2.75		

BONDED SEAM (SHEAR) STRENGTH

REPLICATE No.	PEAK LOAD (lbs/in)	EPA BREAK CLASSIFICATION CODE
1	54.6	SE1
2	57.3	SE1
3	57.0	SE1
4	54.6	SE1
5	55.8	SE1
AVERAGE	**55.9**	
STD. DEV.	1.28	

CHECKED BY: TO DATE: 11-23-10

544 Braddock Avenue • East Pittsburgh, PA 15112 • 412-823-7600 • FAX 412-823-8999 • www.geotechnics.net

PEEL AND SHEAR TEST RESULTS
DESTRUCTIVE SEAM TESTING

ASTM D 6392 & 4437 w/NSF 54

geotechnics
INTEGRITY IN TESTING

CLIENT: RICHARDSON SMITH GARDNER & ASSOCIATES, INC.
CLIENT PROJECT: JOHNSTON COUNTY LANDFILL
PROJECT NO.: L10096-04
LAB ID NO.: L10096-04-02
MATERIAL: 30 MIL LLDPE
SEAM TYPE: DOUBLE FUSION

SAMPLE I.D.: DS-44

PEEL ADHESION

REPLICATE No.	PEAK LOAD (lbs/in)	EPA BREAK CLASSIFICATION CODE	PEEL INCURSION (%)
OUTSIDE TRACK (WELD "A")			
1	54.6	SE1	<10
2	57.2	SE1	<10
3	55.5	SE1	<10
4	55.2	SE1	<10
5	57.9	SE1	<10
AVERAGE	**56.1**		
STD. DEV.	1.40		
INSIDE TRACK (WELD "B")			
1	49.8	SE1	<10
2	55.4	SE1	<10
3	45.0	SE1	<10
4	56.3	SE1	<10
5	56.9	SE1	<10
AVERAGE	**52.7**		
STD. DEV.	5.14		

BONDED SEAM (SHEAR) STRENGTH

REPLICATE No.	PEAK LOAD (lbs/in)	EPA BREAK CLASSIFICATION CODE
1	54.4	SE1
2	57.1	SE1
3	55.3	SE1
4	54.2	SE1
5	52.9	SE1
AVERAGE	**54.8**	
STD. DEV.	1.55	

CHECKED BY: TO DATE: 11-23-10

C:\Excel\Templates\[HDP&S-DFusion.xls]Sheet1

\\GEOSERVER\Data Drive\Synthetics\2010 SYNTHETICS\096 - RSGA - JOHNSTON COUNTY LANDFILL\[L10096-04 DS-43 JOI

544 Braddock Avenue • East Pittsburgh, PA 15112 • 412-823-7600 • FAX 412-823-8999 • www.geotechnics.net

PEEL AND SHEAR TEST RESULTS
DESTRUCTIVE SEAM TESTING

ASTM D 6392 & 4437 w/NSF 54

Geotechnics
INTEGRITY IN TESTING

CLIENT: RICHARDSON SMITH GARDNER & ASSOCIATES, INC.
CLIENT PROJECT: JOHNSTON COUNTY LANDFILL
PROJECT NO.: L10096-04
LAB ID NO.: L10096-04-03
MATERIAL: 30 MIL LLDPE
SEAM TYPE: DOUBLE FUSION

SAMPLE I.D.: DS-45

PEEL ADHESION

REPLICATE No.	PEAK LOAD (lbs/in)	EPA BREAK CLASSIFICATION CODE	PEEL INCURSION (%)
OUTSIDE TRACK (WELD "A")			
1	56.6	SE1	<10
2	52.4	SE1	<10
3	52.8	SE1	<10
4	55.8	SE1	<10
5	54.8	SE1	<10
AVERAGE	**54.5**		
STD. DEV.	1.84		
INSIDE TRACK (WELD "B")			
1	56.0	SE1	<10
2	54.6	SE1	<10
3	54.0	SE1	<10
4	57.6	SE1	<10
5	52.2	SE1	<10
AVERAGE	**54.9**		
STD. DEV.	2.04		

BONDED SEAM (SHEAR) STRENGTH

REPLICATE No.	PEAK LOAD (lbs/in)	EPA BREAK CLASSIFICATION CODE
1	53.0	SE1
2	54.0	SE1
3	53.8	SE1
4	54.8	SE1
5	55.4	SE1
AVERAGE	**54.2**	
STD. DEV.	0.93	

CHECKED BY: J.O DATE: 11-23-10

C:\Excel\Templates\[HDP&S-DFusion.xls]Sheet1

544 Braddock Avenue • East Pittsburgh, PA 15112 • 412-823-7600 • FAX 412-823-8999 • www.geotechnics.net

PEEL AND SHEAR TEST RESULTS
DESTRUCTIVE SEAM TESTING

ASTM D 6392 & 4437 w/NSF 54

geotechnics
INTEGRITY IN TESTING

CLIENT: RICHARDSON SMITH GARDNER & ASSOCIATES, INC.
CLIENT PROJECT: JOHNSTON COUNTY LANDFILL
PROJECT NO.: L10096-04
LAB ID NO.: L10096-04-04
MATERIAL: 30 MIL LLDPE
SEAM TYPE: DOUBLE FUSION

SAMPLE I.D.: DS-46

PEEL ADHESION

REPLICATE No.	PEAK LOAD (lbs/in)	EPA BREAK CLASSIFICATION CODE	PEEL INCURSION (%)
OUTSIDE TRACK (WELD "A")			
1	54.6	SE1	<10
2	55.1	SE1	<10
3	53.9	SE1	<10
4	52.2	SE1	<10
5	55.3	SE1	<10
AVERAGE	**54.2**		
STD. DEV.	1.25		
INSIDE TRACK (WELD "B")			
1	52.7	SE1	<10
2	53.9	SE1	<10
3	53.7	SE1	<10
4	53.3	SE1	<10
5	54.5	SE1	<10
AVERAGE	**53.6**		
STD. DEV.	0.67		

BONDED SEAM (SHEAR) STRENGTH

REPLICATE No.	PEAK LOAD (lbs/in)	EPA BREAK CLASSIFICATION CODE
1	54.1	SE1
2	55.4	SE1
3	54.0	SE1
4	55.3	SE1
5	54.4	SE1
AVERAGE	**54.6**	
STD. DEV.	0.67	

CHECKED BY: T-O DATE: 11-23-10

544 Braddock Avenue • East Pittsburgh, PA 15112 • 412-823-7600 • FAX 412-823-8999 • www.geotechnics.net

PEEL AND SHEAR TEST RESULTS
DESTRUCTIVE SEAM TESTING

ASTM D 6392 & 4437 w/NSF 54

geotechnics
INTEGRITY IN TESTING

CLIENT: RICHARDSON SMITH GARDNER & ASSOCIATES, INC.
CLIENT PROJECT: JOHNSTON COUNTY LANDFILL
PROJECT NO.: L10096-04
LAB ID NO.: L10096-04-05
MATERIAL: 30 MIL LLDPE
SEAM TYPE: DOUBLE FUSION

SAMPLE I.D.: DS-47

PEEL ADHESION

REPLICATE No.	PEAK LOAD (lbs/in)	EPA BREAK CLASSIFICATION CODE	PEEL INCURSION (%)
OUTSIDE TRACK (WELD "A")			
1	52.4	SE1	<10
2	52.8	SE1	<10
3	57.7	SE1	<10
4	56.0	SE1	<10
5	54.2	SE1	<10
AVERAGE	**54.6**		
STD. DEV.	2.23		
INSIDE TRACK (WELD "B")			
1	54.6	SE1	<10
2	51.7	SE1	<10
3	52.0	SE1	<10
4	53.7	SE1	<10
5	55.1	SE1	<10
AVERAGE	**53.4**		
STD. DEV.	1.52		

BONDED SEAM (SHEAR) STRENGTH

REPLICATE No.	PEAK LOAD (lbs/in)	EPA BREAK CLASSIFICATION CODE
1	59.5	SE1
2	53.4	SE1
3	53.7	SE1
4	56.6	SE1
5	54.9	SE1
AVERAGE	**55.6**	
STD. DEV.	2.51	

CHECKED BY: JO DATE: 11/23/10

544 Braddock Avenue • East Pittsburgh, PA 15112 • 412-823-7600 • FAX 412-823-8999 • www.geotechnics.net

PEEL AND SHEAR TEST RESULTS
DESTRUCTIVE SEAM TESTING

ASTM D 6392 & 4437 w/NSF 54

geotechnics
INTEGRITY IN TESTING

CLIENT: RICHARDSON SMITH GARDNER & ASSOCIATES, INC.
CLIENT PROJECT: JOHNSTON COUNTY LANDFILL
PROJECT NO.: L10096-04
LAB ID NO.: L10096-04-06
MATERIAL: 30 MIL LLDPE
SEAM TYPE: DOUBLE FUSION

SAMPLE I.D.: DS-48

PEEL ADHESION

REPLICATE No.	PEAK LOAD (lbs/in)	EPA BREAK CLASSIFICATION CODE	PEEL INCURSION (%)
OUTSIDE TRACK (WELD "A")			
1	46.7	SE1	<10
2	52.1	SE1	<10
3	55.0	SE1	<10
4	48.1	SE1	<10
5	52.4	SE1	<10
AVERAGE	**50.9**		
STD. DEV.	3.39		
INSIDE TRACK (WELD "B")			
1	51.4	SE1	<10
2	50.0	SE1	<10
3	50.3	SE1	<10
4	52.6	SE1	<10
5	51.5	SE1	<10
AVERAGE	**51.2**		
STD. DEV.	1.04		

BONDED SEAM (SHEAR) STRENGTH

REPLICATE No.	PEAK LOAD (lbs/in)	EPA BREAK CLASSIFICATION CODE
1	52.3	SE1
2	55.0	SE1
3	52.9	SE1
4	54.6	SE1
5	55.2	SE1
AVERAGE	**54.0**	
STD. DEV.	1.31	

CHECKED BY: TO DATE: 11-23-10

C:\Excel\Templates\[HDP&S-DFusion.xls]Sheet1

\\GEOSERVER\Data Drive\Synthetics\2010 SYNTHETICS\096 - RSGA - JOHNSTON COUNTY LANDFILL\[L10096-04 DS-47 JOH

544 Braddock Avenue • East Pittsburgh, PA 15112 • 412-823-7600 • FAX 412-823-8999 • www.geotechnics.net

PEEL AND SHEAR TEST RESULTS
DESTRUCTIVE SEAM TESTING

ASTM D 6392 & 4437 w/NSF 54

Geotechnics
INTEGRITY IN TESTING

CLIENT: RICHARDSON SMITH GARDNER & ASSOCIATES, INC.
CLIENT PROJECT: JOHNSTON COUNTY LANDFILL
PROJECT NO.: L10096-04
LAB ID NO.: L10096-04-07
MATERIAL: 30 MIL LLDPE
SEAM TYPE: DOUBLE FUSION

SAMPLE I.D.: DS-49

PEEL ADHESION

REPLICATE No.	PEAK LOAD (lbs/in)	EPA BREAK CLASSIFICATION CODE	PEEL INCURSION (%)
OUTSIDE TRACK (WELD "A")			
1	52.2	SE1	<10
2	53.0	SE1	<10
3	52.7	SE1	<10
4	55.9	SE1	<10
5	52.4	SE1	<10
AVERAGE	**53.2**		
STD. DEV.	1.52		
INSIDE TRACK (WELD "B")			
1	54.1	SE1	<10
2	52.7	SE1	<10
3	51.3	SE1	<10
4	55.1	SE1	<10
5	51.9	SE1	<10
AVERAGE	**53.0**		
STD. DEV.	1.56		

BONDED SEAM (SHEAR) STRENGTH

REPLICATE No.	PEAK LOAD (lbs/in)	EPA BREAK CLASSIFICATION CODE
1	54.0	SE1
2	54.9	SE1
3	56.9	SE1
4	55.7	SE1
5	57.1	SE1
AVERAGE	**55.7**	
STD. DEV.	1.32	

CHECKED BY: JO DATE: 11-23-10

544 Braddock Avenue • East Pittsburgh, PA 15112 • 412-823-7600 • FAX 412-823-8999 • www.geotechnics.net

PEEL AND SHEAR TEST RESULTS
DESTRUCTIVE SEAM TESTING

ASTM D 6392 & 4437 w/NSF 54

geotechnics
INTEGRITY IN TESTING

CLIENT: RICHARDSON SMITH GARDNER & ASSOCIATES, INC.
CLIENT PROJECT: JOHNSTON COUNTY LANDFILL
PROJECT NO.: L10096-04
LAB ID NO.: L10096-04-08
MATERIAL: 30 MIL LLDPE
SEAM TYPE: DOUBLE FUSION

SAMPLE I.D.: DS-50

PEEL ADHESION

REPLICATE No.	PEAK LOAD (lbs/in)	EPA BREAK CLASSIFICATION CODE	PEEL INCURSION (%)
OUTSIDE TRACK (WELD "A")			
1	53.7	SE1	<10
2	46.9	SE1	<10
3	50.2	SE1	<10
4	48.0	SE1	<10
5	49.7	SE1	<10
AVERAGE	**49.7**		
STD. DEV.	2.60		
INSIDE TRACK (WELD "B")			
1	51.6	SE1	<10
2	49.9	SE1	<10
3	52.6	SE1	<10
4	53.1	SE1	<10
5	50.9	SE1	<10
AVERAGE	**51.6**		
STD. DEV.	1.29		

BONDED SEAM (SHEAR) STRENGTH

REPLICATE No.	PEAK LOAD (lbs/in)	EPA BREAK CLASSIFICATION CODE
1	55.4	SE1
2	53.2	SE1
3	53.9	SE1
4	54.0	SE1
5	55.7	SE1
AVERAGE	**54.4**	
STD. DEV.	1.06	

CHECKED BY: T.O DATE: 11-23-10

544 Braddock Avenue • East Pittsburgh, PA 15112 • 412-823-7600 • FAX 412-823-8999 • www.geotechnics.net

PEEL AND SHEAR TEST RESULTS
DESTRUCTIVE SEAM TESTING

ASTM D 6392 & 4437 w/NSF 54

geotechnics
INTEGRITY IN TESTING

CLIENT: RICHARDSON SMITH GARDNER & ASSOCIATES, INC.
CLIENT PROJECT: JOHNSTON COUNTY LANDFILL
PROJECT NO.: L10096-04
LAB ID NO.: L10096-04-09
MATERIAL: 30 MIL LLDPE
SEAM TYPE: DOUBLE FUSION

SAMPLE I.D.: DS-51

PEEL ADHESION

REPLICATE No.	PEAK LOAD (lbs/in)	EPA BREAK CLASSIFICATION CODE	PEEL INCURSION (%)
OUTSIDE TRACK (WELD "A")			
1	54.7	SE1	<10
2	57.6	SE1	<10
3	48.1	SE1	<10
4	52.5	SE1	<10
5	55.3	SE1	<10
AVERAGE	**53.6**		
STD. DEV.	3.59		
INSIDE TRACK (WELD "B")			
1	53.6	SE1	<10
2	53.1	SE1	<10
3	55.5	SE1	<10
4	50.9	SE1	<10
5	52.2	SE1	<10
AVERAGE	**53.1**		
STD. DEV.	1.71		

BONDED SEAM (SHEAR) STRENGTH

REPLICATE No.	PEAK LOAD (lbs/in)	EPA BREAK CLASSIFICATION CODE
1	55.2	SE1
2	56.8	SE1
3	54.7	SE1
4	54.9	SE1
5	55.6	SE1
AVERAGE	**55.4**	
STD. DEV.	0.83	

CHECKED BY: J.O DATE: 11-23-10

544 Braddock Avenue • East Pittsburgh, PA 15112 • 412-823-7600 • FAX 412-823-8999 • www.geotechnics.net

PEEL AND SHEAR TEST RESULTS
DESTRUCTIVE SEAM TESTING

ASTM D 6392 & 4437 w/NSF 54

Geotechnics
INTEGRITY IN TESTING

CLIENT: RICHARDSON SMITH GARDNER & ASSOCIATES, INC.
CLIENT PROJECT: JOHNSTON COUNTY LANDFILL
PROJECT NO.: L10096-04
LAB ID NO.: L10096-04-10
MATERIAL: 30 MIL LLDPE
SEAM TYPE: DOUBLE FUSION

SAMPLE I.D.: DS-52

PEEL ADHESION

REPLICATE No.	PEAK LOAD (lbs/in)	EPA BREAK CLASSIFICATION CODE	PEEL INCURSION (%)
OUTSIDE TRACK (WELD "A")			
1	55.2	SE1	<10
2	52.7	SE1	<10
3	55.5	SE1	<10
4	53.3	SE1	<10
5	56.1	SE1	<10
AVERAGE	**54.6**		
STD. DEV.	1.48		
INSIDE TRACK (WELD "B")			
1	56.7	SE1	<10
2	55.0	SE1	<10
3	55.9	SE1	<10
4	58.9	SE1	<10
5	54.6	SE1	<10
AVERAGE	**56.2**		
STD. DEV.	1.70		

BONDED SEAM (SHEAR) STRENGTH

REPLICATE No.	PEAK LOAD (lbs/in)	EPA BREAK CLASSIFICATION CODE
1	52.6	SE1
2	54.7	SE1
3	54.1	SE1
4	55.9	SE1
5	57.1	SE1
AVERAGE	**54.9**	
STD. DEV.	1.72	

CHECKED BY: JO DATE: 11-23-10

544 Braddock Avenue • East Pittsburgh, PA 15112 • 412-823-7600 • FAX 412-823-8999 • www.geotechnics.net

PEEL AND SHEAR TEST RESULTS
DESTRUCTIVE SEAM TESTING

ASTM D 6392 & 4437 w/NSF 54

geotechnics
INTEGRITY IN TESTING

CLIENT: RICHARDSON SMITH GARDNER & ASSOCIATES, INC.
CLIENT PROJECT: JOHNSTON COUNTY LANDFILL
PROJECT NO.: L10096-04
LAB ID NO.: L10096-04-11
MATERIAL: 30 MIL LLDPE
SEAM TYPE: DOUBLE FUSION

SAMPLE I.D.: DS-53

PEEL ADHESION

REPLICATE No.	PEAK LOAD (lbs/in)	EPA BREAK CLASSIFICATION CODE	PEEL INCURSION (%)
OUTSIDE TRACK (WELD "A")			
1	54.1	SE1	<10
2	52.4	SE1	<10
3	51.9	SE1	<10
4	54.2	SE1	<10
5	50.6	SE1	<10
AVERAGE	**52.6**		
STD. DEV.	1.53		
INSIDE TRACK (WELD "B")			
1	53.9	SE1	<10
2	54.4	SE1	<10
3	53.8	SE1	<10
4	52.4	SE1	<10
5	53.6	SE1	<10
AVERAGE	**53.6**		
STD. DEV.	0.74		

BONDED SEAM (SHEAR) STRENGTH

REPLICATE No.	PEAK LOAD (lbs/in)	EPA BREAK CLASSIFICATION CODE
1	54.8	SE1
2	52.3	SE1
3	55.5	SE1
4	53.2	SE1
5	54.8	SE1
AVERAGE	**54.1**	
STD. DEV.	1.32	

CHECKED BY: J. O DATE: 11-23-10

544 Braddock Avenue • East Pittsburgh, PA 15112 • 412-823-7600 • FAX 412-823-8999 • www.geotechnics.net

PEEL AND SHEAR TEST RESULTS
DESTRUCTIVE SEAM TESTING

ASTM D 6392 & 4437 w/NSF 54

geotechnics
INTEGRITY IN TESTING

CLIENT: RICHARDSON SMITH GARDNER & ASSOCIATES, INC.
CLIENT PROJECT: JOHNSTON COUNTY LANDFILL
PROJECT NO.: L10096-04
LAB ID NO.: L10096-04-12
MATERIAL: 30 MIL LLDPE
SEAM TYPE: DOUBLE FUSION

SAMPLE I.D.: DS-54

PEEL ADHESION

REPLICATE No.	PEAK LOAD (lbs/in)	EPA BREAK CLASSIFICATION CODE	PEEL INCURSION (%)
OUTSIDE TRACK (WELD "A")			
1	63.1	SE1	<10
2	59.0	SE1	<10
3	58.0	SE1	<10
4	58.9	SE1	<10
5	66.0	SE1	<10
AVERAGE	**61.0**		
STD. DEV.	3.42		
INSIDE TRACK (WELD "B")			
1	56.0	SE1	<10
2	57.0	SE1	<10
3	56.0	SE1	<10
4	55.2	SE1	<10
5	56.9	SE1	<10
AVERAGE	**56.2**		
STD. DEV.	0.74		

BONDED SEAM (SHEAR) STRENGTH

REPLICATE No.	PEAK LOAD (lbs/in)	EPA BREAK CLASSIFICATION CODE
1	64.6	SE1
2	66.9	SE1
3	64.2	SE1
4	58.2	SE1
5	62.7	SE1
AVERAGE	**63.3**	
STD. DEV.	3.23	

CHECKED BY: JR DATE: 11-23-10

C:\Excel\Templates\[HDP&S-DFusion.xls]Sheet1

\\GEOSERVER\Data Drive\Synthetics\2010 SYNTHETICS\096 - RSGA - JOHNSTON COUNTY LANDFILL\[L10096-04 DS-53 JOH

544 Braddock Avenue • East Pittsburgh, PA 15112 • 412-823-7600 • FAX 412-823-8999 • www.geotechnics.net

HALLATON, INC.

1206 SPARKS ROAD, SPARKS, MD 21152
410-583-7700 Fax 410-583-7720

Repair Log

Project No.: 0901-2008
Project Name: Johnston Co LF area 1 closure
Project Start Date: 5/27/2009
Project Location: Smithfield, NC
Page: 1 of 2

Material: LLDPE
Thickness: 40 mil

Repair #	Defect Code	Defect Location	Repair Date	Repair Time	Repair Type	Approx Size	Machine ID	Repair Tech	Vacuum Test	
									P/F	Date
1	DT-1	P-1/2 40'> BOS	5/27/2009	10:25	P	2X5	9	MM	P	5/28/09
2	AT	P-2/3/4	5/27/2009	10:32	P	2X2	9	MM	P	5/28/09
3	DT-2	P-2/4 90'> BOS	5/27/2009	10:45	P	2X5	9	MM	P	5/28/09
4	FT	P-1/2 235'> BOS	5/27/2009	11:40	C	2X17	9	MM	P	5/28/09
5	BO	P-1/2 265'> BOS	5/27/2009	11:50	P	2X2	9	MM	P	5/28/09
6	AT	P-1/5/9/10	5/27/2009	2:10	P	2X3	9	MM	P	5/28/09
7	AT	P-1/2/5	5/27/2009	2:15	P	2X3	9	MM	P	5/28/09
8	AT	P-2/5/6	5/27/2009	2:20	P	2X2	9	MM	P	5/28/09
9	DT-3	P-6/7 146'> BOS	5/27/2009	2:55	P	2X5	9	MM	P	5/28/09
10	AT	P-6/7/8	5/27/2009	3:21	P	2X3	9	MM	P	5/28/09
11	MD	P-6/8 71'> BOS	5/27/2009	3:30	P	2X2	9	MM	P	5/28/09
12	DT-5	P-6/8 62'> BOS	5/27/2009	4:08	P	2X2	9	MM	P	5/28/09
13	BO	P-5/6 555'> BOS	5/27/2009	3:55	P	2X2	9	MM	P	5/28/09
14	DT-4	P-5/6 482'> BOS	5/27/2009	3:47	P	2X5	9	MM	P	5/28/09
15	AT	P-2/6/7	5/27/2009	2:35	P	2X2	9	MM	P	5/28/09
16	MD	P-6/8 9'>BOS 4'> into P-6	5/27/2009	4:55	P	2X2	9	MM	P	5/28/09
17	MD	P-5/11 2'> into P-5	5/27/2009	4:46	P	2X2	9	MM	P	5/28/09
18	BO	P-5/11 15'> BOS	5/27/2009	4:48	P	2X2	9	MM	P	5/28/09
19	AT	P-5/6/11/12	5/27/2009	5:25	P	3X4	9	MM	P	5/28/09
20	MD	P-12/16 4'> into P-16	5/27/2009	5:51	P	2X2	9	MM	P	5/28/09
21	DT-6	P-16/18 21'> BOS	5/27/2009	6:14	P	2X5	9	MM	P	5/28/09
22	AT	P-16/17/18	5/27/2009	6:07	P	2X2	9	MM	P	5/28/09
23	BO	P-15/16 72'> BOS	5/27/2009	6:00	P	2X2	9	MM	P	5/28/09
24	AT	P-11/12/15/16	5/27/2009	5:57	P	2X5	9	MM	P	5/28/09
25	AT	P-12/14/16/17	5/27/2009	5:50	P	2X2	9	MM	P	5/28/09
26	BO	P-12/14 37'> BOS	5/27/2009	5:36	P	2X2	9	MM	P	5/28/09
27	AT	P-12/13/14	5/27/2009	5:33	P	2X2	9	MM	P	5/28/09
28	DT-7	P-11/12 64'> BOS	5/27/2009	6:30	P	2X5	9	MM	P	5/28/09
29	AT	P-8/12/13	5/27/2009	5:11	P	2X2	9	MM	P	5/28/09
30	AT	P-8/6/12	5/27/2009	5:04	P	2X4	9	MM	P	5/28/09
31	AT	P-15/16/19/23	5/30/2009	8:35	P	3X5	9	MM	P	5/30/09
32	MD	P-19/16 2'> into P-19	5/30/2009	8:18	P	2X2	9	MM	P	5/30/09
33	AT	P-18/19/20	5/30/2009	8:05	P	2X2	9	MM	P	5/30/09
34	AT	P-16/18/19	5/30/2009	8:10	P	2X2	9	MM	P	5/30/09
35	AT	P-19/23/24	5/30/2009	8:47	P	2X2	9	MM	P	5/30/09
36	DT-8	P-19/20 64'> BOS	5/30/2009	8:43	P	2X5	9	MM	P	5/30/09
37	AT	P-19/20/25/26	6/4/2009	10:08	P	2X7	9	MM	P	6/4/09
38	AT	P-20/21/26/27	6/4/2009	10:00	P	2X5	9	MM	P	6/4/09
39	AT	P-21/22/27/28	6/4/2009	10:45	P	2X4	9	MM	P	6/4/09
40	BO	P-27/28 22'> BOS	6/4/2009	10:11	P	2X2	9	MM	P	6/4/09

Defect Code:
BO - Burn Out
CR - Crease
DT - Destructive Test Number
EE - Earthwork Equipment Damage
FM – Fishmouth
FT – Pressure Test Cut
T – Joint
SI - Soil Surface Irregularity
DD - Deployment Damage
MD - Material Damage
WR - Wrinkle
WS - Welder restart
FD - Factory Defect
AT - Air Test

Repair Type: C-Cap Strip
P- Patch
B-Extrudate Bead
GB-Grind & Bead
BT-Boot

Test Result: P-Pass, F-Fail

Notations: BOS or 0-Beginning of Seam/ EOS-End of Seam/ –to an area/ >from an area/ NOAT-No AT

HALLATON, INC.

1206 SPARKS ROAD, SPARKS, MD 21152
410-583-7700 Fax 410-583-7720

Repair Log

Project No.: 0901-2008
Project Name: Johnston Co LF area 1 closure
Project Start Date: 5/27/2009
Project Location: Smithfield, NC
Page: 2 of 2

Material: LLDPE
Thickness: 40 mil

Repair #	Defect Code	Defect Location	Repair Date	Repair Time	Repair Type	Approx Size	Machine ID	Repair Tech	Vacuum Test	
									P/F	Date
41	BO	P-27/28 47'> BOS	6/4/2009	10:16	P	2X3	9	MM	P	6/4/09
42	AT	P-26/27 EOS	6/4/2009	10:23	P	2X2	9	MM	P	6/4/09
43	DT-9	P-27/28 72'> BOS	6/4/2009	10:40	P	2X5	9	MM	P	6/4/09

Defect Code:
BO - Burn Out
CR - Crease
DT - Destructive Test Number
EE - Earthwork Equipment Damage
FM – Fishmouth
FT – Pressure Test Cut
T – Joint
SI - Soil Surface Irregularity
DD - Deployment Damage
MD - Material Damage
WR - Wrinkle
WS - Welder restart
FD - Factory Defect
AT - Air Test

Repair Type: C-Cap Strip
P- Patch
B-Extrudate Bead
GB-Grind & Bead
BT-Boot

Test Result: P-Pass, F-Fail

Notations: BOS or 0-Beginning of Seam/ EOS-End of Seam/ --to an area/ >from an area/ NOAT-No AT

HALLATON, INC.

1206 SPARKS ROAD, SPARKS, MD 21152
410-583-7700 Fax 410-583-7720

Repair Log

Project No.: 1043-16310
Project Name: Johnston Co
Project Start Date: 11/3/2010
Project Location: Smithfield, NC
Page: 1 of 9

Material: LLDPE
Thickness: 30 mil

Repair #	Defect Code	Defect Location	Repair Date	Repair Time	Repair Type	Approx Size	Machine ID	Repair Tech	Vacuum Test	
									P/F	Date
1	FT	FL-1/P-1 30'> BOS	11/5/2010	12:14	P	2X4	X20	JV	P	11/5/10
2	DS-1	P-1/2 89'> BOS	11/5/2010	10:48	P	2X5	X20	JV	P	11/5/10
3	FT	P-1/FL-1 21'> EOS	11/5/2010	12:10	P	2X5	X20	JV	P	11/5/10
4	FT	P-1/FL-1 9'> EOS	11/5/2010	12:01	P	2X3	X20	JV	P	11/5/10
5	AT	P-1/FL-1/FL-2	11/5/2010	11:58	P	2X3	X20	JV	P	11/5/10
6	FT	P-1/FL-2 73'> BOS	11/5/2010	11:55	P	2X5	X20	JV	P	11/5/10
7	FT	P-4/5 5'> BOS	11/5/2010	11:33	P	3X3	X20	JV	P	11/5/10
8	DS-3	P-5/6 58'> BOS	11/5/2010	11:10	P	2X5	X20	JV	P	11/5/10
9	FT	P-7/9 50'> BOS	11/5/2010	11:20	P	2X2	X20	JV	P	11/5/10
10	WR	P-9/10 33'> BOS	11/5/2010	11:15	P	2X4	X20	JV	P	11/5/10
11	AT	P-6/7/8	11/5/2010	11:04	P	2X5	X20	JV	P	11/5/10
12	FT	P-7/8 18'> BOS	11/5/2010	11:00	P	2X2	X20	JV	P	11/5/10
13	AT	P-7/8/9	11/5/2010	10:55	P	2X2	X20	JV	P	11/5/10
14	DS-4	P-8/9 24'> EOS	11/5/2010	10:35	P	2X5	X20	JV	P	11/5/10
15	DS-2	P-4/5 68'> EOS	11/5/2010	10:11	P	2X5	X20	JV	P	11/5/10
16	AT	P-2/3/EXT-1	11/5/2010	3:31	P	2X2	X20	JV	P	11/5/10
17	MD	P-5/6 19'> EOS	11/5/2010	3:13	P	2X2	X20	JV	P	11/5/10
18	DS-13	P-10/22 7'> BOS	11/8/2010	4:45	P	2X5	X20	JV	P	11/9/10
19	AT	P-10/22/23	11/8/2010	4:03	P	2X2	X20	JV	P	11/9/10
20	WS/AT	P-10/11/23	11/8/2010	4:13	P	2X5	X20	JV	P	11/9/10
21	DS-10	P-22/23 13'> BOS	11/8/2010	4:31	P	2X5	X20	JV	P	11/9/10
22	AT	P-11/23/24	11/8/2010	4:21	P	2X4	X20	JV	P	11/9/10
23	DS-5	P-10/11 131'> BOS	11/8/2010	4:36	P	2X5	X20	JV	P	11/9/10
24	FT	P-10/11 110'> BOS	11/8/2010	4:56	P	2X7	X20	JV	P	11/9/10
25	BO	P-10/11 89'> BOS	11/8/2010	5:11	P	3X7	X20	JV	P	11/9/10
26	FT	P-10/11 63'> BOS	11/8/2010	5:16	P	2X2	X20	JV	P	11/9/10
27	BO	P-10/11 51'> BOS	11/8/2010	5:21	P	2X2	X20	JV	P	11/9/10
28	FT	P-10/11 39'> BOS	11/8/2010	5:24	P	2X2	X20	JV	P	11/9/10
29	DS-7	P-14/15 49'> BOS	11/9/2010	9:28	P	2X5	X20	JV	P	11/9/10
30	WS/AT	P-11/12/13	11/9/2010	7:36	P	2X10	X20	JV	P	11/9/10
31	DS-6	P-12/13 15'> BOS	11/9/2010	7:26	P	2X6	X20	JV	P	11/9/10
32	AT	P-13/12/14	11/9/2010	8:00	P	2X3	X20	JV	P	11/9/10
33	AT	P-11/13/24	11/9/2010	7:45	P	2X2	X20	JV	P	11/9/10
34	WS/AT	P-13/24/25	11/9/2010	7:52	P	2X8	X20	JV	P	11/9/10
35	AT	P-13/14/25	11/9/2010	7:56	P	2X2	X20	JV	P	11/9/10
36	WS/AT	P-14/25/29	11/9/2010	8:08	P	2X3	X20	JV	P	11/9/10
37	WS/AT	P-14/15/29	11/9/2010	8:13	P	2X5	X20	JV	P	11/10/10
38	AT	P-25/26/29	11/9/2010	8:17	P	2X3	X20	JV	P	11/10/10
39	WS/AT	P-26/15/29	11/9/2010	8:29	C	2X9	X20	JV	P	11/10/10
40	AT	P-15/26/27	11/9/2010	8:25	P	2X6	X20	JV	P	11/10/10

Defect Code:
BO - Burn Out
CR - Crease
DT - Destructive Test Number
EE - Earthwork Equipment Damage
FM – Fishmouth
FT – Pressure Test Cut
T – Joint
SI - Soil Surface Irregularity
DD - Deployment Damage
MD - Material Damage
WR - Wrinkle
WS - Welder restart
FD - Factory Defect
AT - Air Test

Repair Type: C-Cap Strip
P- Patch
B-Extrudate Bead
GB-Grind & Bead
BT-Boot

Test Result: P-Pass, F-Fail

Notations: BOS or 0-Beginning of Seam/ EOS-End of Seam/ --to an area/ >from an area/ NOAT-No AT

HALLATON, INC.

1206 SPARKS ROAD, SPARKS, MD 21152
410-583-7700 Fax 410-583-7720

Repair Log

Project No.: 1043-16310 Material: LLDPE
Project Name: Johnston Co
Project Start Date: 11/3/2010 Thickness: 30 mil
Project Location: Smithfield, NC
Page: 2 of 9

Repair #	Defect Code	Defect Location	Repair Date	Repair Time	Repair Type	Approx Size	Machine ID	Repair Tech	Vacuum Test	
									P/F	Date
41	AT	P-15/16/27	11/9/2010	8:33	P	2X2	X20	JV	P	11/10/10
42	MD	P-15/16 34'> BOS	11/9/2010	8:44	P	2X2	X20	JV	P	11/10/10
43	AT	P-16/17/27/28	11/9/2010	8:40	P	2X6	X20	JV	P	11/10/10
44	AT	P-17/18/28/30	11/9/2010	8:48	P	2X3	X20	JV	P	11/10/10
45	BT	P-17/18 16'> BOS 9' into P-18	11/8/2010	3:50	BT	9X10	X20	JV	P	11/10/10
46	DD	P-17/18 15'> BOS	11/9/2010	9:22	P	2X3	X20	JV	P	11/10/10
47	DS-8	P-19/21 7'> BOS	11/9/2010	11:06	P	2X5	X20	JV	P	11/10/10
48	AT	P-19/20/21	11/9/2010	9:04	P	2X2	X20	JV	P	11/10/10
49	AT	P-19/20/31	11/9/2010	9:00	P	2X2	X20	JV	P	11/10/10
50	AT	P-18/19/30/31	11/9/2010	8:55	P	2X6	X20	JV	P	11/10/10
51	BO	P-27/28 60'> BOS	11/9/2010	9:42	P	2X5	X20	JV	P	11/10/10
52	DS-9	P-25/26 28'> EOS	11/9/2010	9:47	P	2X5	X20	JV	P	11/10/10
53	BO	P-25/26 59'> EOS	11/9/2010	9:52	P	2X2	X20	JV	P	11/10/10
54	WR	P-23/24 80'> EOS	11/9/2010	10:03	P	4X4	X20	JV	P	11/10/1
55	BO	P-22/32 82'> BOS	11/9/2010	10:07	P	2X2	X20	JV	P	11/10/
56	AT	P-33/34/35	11/9/2010	10:33	P	2X4	X20	JV	P	11/10/10
57	FT	P-33/35 12'> EOS	11/9/2010	10:28	P	2X1	X20	JV	P	11/10/10
58	FT	P-33/35 22'> EOS	11/9/2010	10:25	P	1X1	X20	JV	P	11/10/10
59	DS-11	P-33/35 28'> EOS	11/9/2010	10:22	P	2X5	X20	JV	P	11/10/10
60	AT	P-34/35/36	11/9/2010	10:40	P	2X4	X20	JV	P	11/10/10
61	DS-12	P-36/37 77'> EOS	11/9/2010	10:45	P	2X5	X20	JV	P	11/10/10
62	BO	P-33/35 60'> EOS	11/9/2010	10:16	P	2X5	X20	JV	P	11/10/10
63	BO	P-35/36 79'> BOS	11/9/2010	10:49	P	2X4	X20	JV	P	11/10/10
64	MD	P-35/36 67'> BOS	11/9/2010	10:46	P	3X3	X20	JV	P	11/10/10
65	BT	P-33/35 54'> BOS 11' into P-35	11/9/2010	11:03	BT	7X7	X20	JV	P	11/10/10
66	DD	P-33/35 54'> BOS to BT	11/9/2010	11:06	C	2X7	X20	JV	P	11/10/10
67	BO	P-36/37 149'> EOS	11/9/2010	11:53	P	3X4	X20	JV	P	11/10/10
68	BT	P-39/38/37	11/9/2010	12:08	P	2X2	X20	JV	P	11/10/10
69	MD	P-36/37 32'> BOS 9' into P-37	11/9/2010	2:27	P	2X2	X20	JV	P	11/10/10
70	WR/AT	P-32/22/9/10	11/9/2010	2:39	P	2X8	X20	JV	P	11/10/10
71	AT	P-33/32/8/9	11/9/2010	2:45	P	2X2	X20	JV	P	11/10/10
72	MD	P-8/33 3'> EOS 1' into P-33	11/9/2010	2:46	P	3X3	X20	JV	P	11/10/10
73	AT	P-8/35/33	11/9/2010	2:52	P	2X2	X20	JV	P	11/10/10
74	AT	P-6/8/35	11/9/2010	2:55	P	2X2	X20	JV	P	11/10/10
75	AT	P-6/35/36	11/9/2010	2:58	P	2X2	X20	JV	P	11/10/10
76	AT	P-5/6/36	11/9/2010	3:01	P	2X2	X20	JV	P	11/10/10
77	AT	P-5/36/37	11/9/2010	3:04	P	2X2	X20	JV	P	11/10/10
78	AT	P-4/5/37	11/9/2010	3:07	P	2X2	X20	JV	P	11/10/10
79	AT	P-4/37/39	11/9/2010	3:10	P	2X2	X20	JV	P	11/10/10
80	AT	P-3/4/39	11/9/2010	3:14	P	2X2	X20	JV	P	11/10/10

Defect Code:

BO - Burn Out
CR - Crease
DT - Destructive Test Number
EE - Earthwork Equipment Damage
FM – Fishmouth
FT – Pressure Test Cut
T – Joint
SI - Soil Surface Irregularity
DD - Deployment Damage
MD - Material Damage
WR - Wrinkle
WS - Welder restart
FD - Factory Defect
AT - Air Test

Repair Type: C-Cap Strip, P- Patch, B-Extrudate Bead, GB-Grind & Bead, BT-Boot

Test Result: P-Pass, F-Fail

Notations: BOS or 0-Beginning of Seam/ EOS-End of Seam/ --to an area/ >from an area/ NOAT-No AT

HALLATON, INC.

1206 SPARKS ROAD, SPARKS, MD 21152
410-583-7700 Fax 410-583-7720

Repair Log

Project No.: 1043-16310
Project Name: Johnston Co
Project Start Date: 11/3/2010
Project Location: Smithfield, NC
Page: 3 of 9

Material: LLDPE
Thickness: 30 mil

Repair #	Defect Code	Defect Location	Repair Date	Repair Time	Repair Type	Approx Size	Machine ID	Repair Tech	Vacuum Test	
									P/F	Date
81	WS/AT	P-3/39/40/EXT-1	11/9/2010	3:20	C	2X10	X20	JV	P	11/10/10
82	DS-14	P-39/40 12'> BOS	11/9/2010	3:26	P	2X5	X20	JV	P	11/10/10
83	AT	P-39/40/38	11/9/2010	2:52	P	2X4	X20	JV	P	11/10/10
84	BO	P-38/40 30'> BOS	11/9/2010	1:30	P	2X5	X20	JV	P	11/10/10
85	BO	P-40/41 186'> EOS	11/9/2010	1:58	P	2X2	X20	JV	P	11/10/10
86	MD	P-41/42 73'> BOS 1' into P-41	11/9/2010	2:11	P	2X3	X20	JV	P	11/10/10
87	BO	P-41/42 76'> BOS	11/9/2010	2:07	P	2X4	X20	JV	P	11/10/10
88	BO	P-42/43 205'> EOS	11/9/2010	2:14	P	2X3	X20	JV	P	11/10/10
89	FT	P-42/43 209'> EOS	11/9/2010	2:16	P	2X1	X20	JV	P	11/10/10
90	DS-16	P-42/43 54'> BOS	11/9/2010	3:52	P	2X5	X20	JV	P	11/10/10
91	DS-15	P-41/42 12'> BOS	11/9/2010	3:37	P	2X5	X20	JV	P	11/10/10
92	AT	P-2/40/41/EXT-1	11/9/2010	3:32	P	2X5	X20	JV	P	11/10/10
93	AT	P-1/2/41/42	11/9/2010	3:34	P	2X2	X20	JV	P	11/10/10
94	AT	P-1/42/43/FL	11/9/2010	3:40	P	2X3	X20	JV	P	11/10/10
95	BT	P-42/43 13'> BOS 8' into P-43	11/9/2010	4:05	BT	6X7	X20	JV	P	11/10/10
96	WS/AT	P-43/44/FL	11/9/2010	4:11	P	2X6	X20	JV	P	11/10/10
97	AT	P-44/46/FL	11/9/2010	4:17	P	2X4	X20	JV	P	11/10/10
98	AT	P-46/47/FL	11/9/2010	4:21	P	2X2	X20	JV	P	11/10/10
99	WS/AT	P-47/48/FL	11/9/2010	4:27	P	2X7	X20	JV	P	11/10/10
100	AT	P-47/48/50	11/9/2010	12:00	P	2X2	X19	MR	P	11/10/10
101	FT	P-47/50 5'> BOS	11/9/2010	12:05	P	2X3	X19	MR	P	11/10/10
102	FT	P-47/50 6'> EOS	11/9/2010	11:53	P	2X2	X19	MR	P	11/10/10
103	AT	P-47/50/51	11/9/2010	11:49	P	1X1	X19	MR	P	11/10/10
104	BO	P-47/51 9'> BOS	11/9/2010	12:10	P	2X3	X19	MR	P	11/10/10
105	AT	P-50/51/52	11/9/2010	11:47	P	1X1	X19	MR	P	11/10/10
106	AT	P-47/51/52	11/9/2010	11:39	P	2X2	X19	MR	P	11/10/10
107	AT	P-47/52/53	11/9/2010	11:41	P	1X1	X19	MR	P	11/10/10
108	FT	P-47/53 7'> BOS	11/9/2010	11:45	P	2X3	X19	MR	P	11/10/10
109	AT	P-45/46/47	11/9/2010	11:37	P	2X2	X19	MR	P	11/10/10
110	MD	P-45/46 4'> BOS 2' into P-46	11/9/2010	11:35	P	2X2	X19	MR	P	11/10/10
111	AT	P-44/45/46	11/9/2010	11:30	P	2X2	X19	MR	P	11/10/10
112	BO	P-44/46 12'> EOS	11/9/2010	11:33	P	2X3	X19	MR	P	11/10/10
113	DS-17	P-45/44 54'> BOS	11/9/2010	4:18	P	2X5	X19	MR	P	11/10/10
114	MD	P-45/44 170'> BOS	11/9/2010	4:20	P	2X2	X19	MR	P	11/10/10
115	AT	P-47/53/55	11/9/2010	1:40	P	1X1	X19	MR	P	11/10/10
116	MD	P-52/53 47'> BOS	11/9/2010	1:43	P	1X1	X19	MR	P	11/10/10
117	FT	P-52/53 54'> BOS	11/9/2010	1:46	P	2X2	X19	MR	P	11/10/10
118	AT	P-53/54/55	11/9/2010	1:50	P	2X2	X19	MR	P	11/10/10
119	AT	P-47/54/55	11/9/2010	1:57	P	2X2	X19	MR	P	11/10/10
120	MD	P-47/45 39'> BOS	11/9/2010	4:08	P	2X2	X19	MR	P	11/10/10

Defect Code:
BO - Burn Out
CR - Crease
DT - Destructive Test Number
EE - Earthwork Equipment Damage
FM – Fishmouth
FT – Pressure Test Cut
T – Joint
SI - Soil Surface Irregularity
DD - Deployment Damage
MD - Material Damage
WR - Wrinkle
WS - Welder restart
FD - Factory Defect
AT - Air Test

Repair Type: C-Cap Strip
P- Patch
B-Extrudate Bead
GB-Grind & Bead
BT-Boot

Test Result: P-Pass, F-Fail

Notations: BOS or 0-Beginning of Seam/ EOS-End of Seam/ --to an area/ >from an area/ NOAT-No AT

HALLATON, INC.

1206 SPARKS ROAD, SPARKS, MD 21152
410-583-7700 Fax 410-583-7720

Repair Log

Project No.: 1043-16310
Project Name: Johnston Co
Project Start Date: 11/3/2010
Project Location: Smithfield, NC
Page: 4 of 9

Material: LLDPE
Thickness: 30 mil

Repair #	Defect Code	Defect Location	Repair Date	Repair Time	Repair Type	Approx Size	Machine ID	Repair Tech	Vacuum Test	
									P/F	Date
121	MD	P-47/45 32'> BOS	11/9/2010	4:15	P	2X2	X19	MR	P	11/10/10
122	AT	P-47/54/56	11/9/2010	2:10	P	1X1	X19	MR	P	11/10/10
123	FT	P-52/53 75'> BOS	11/9/2010	2:05	P	1X1	X19	MR	P	11/10/10
124	AT	P-47/56/57	11/9/2010	2:18	P	1X1	X19	MR	P	11/10/10
125	FT	P-47/57 5'> BOS	11/9/2010	2:22	P	1X1	X19	MR	P	11/10/10
126	FT	P-56/57 9'> BOS	11/9/2010	2:25	P	2X2	X19	MR	P	11/10/10
127	DS-21	P-56/57 15'> BOS	11/9/2010	2:48	P	2X5	X19	MR	P	11/10/10
128	AT	P-47/57/58	11/9/2010	2:28	P	2X2	X19	MR	P	11/10/10
129	DS-18	P-47/58 13'> BOS	11/9/2010	3:11	P	2X5	X19	MR	P	11/10/10
130	AT	P-47/58/59	11/9/2010	2:58	P	2X2	X19	MR	P	11/10/10
131	FT	P-57/58 7'> EOS	11/9/2010	3:00	P	2X2	X19	MR	P	11/10/10
132	FT	P-56/57 6'> EOS	11/9/2010	3:15	P	2X2	X19	MR	P	11/10/10
133	FT	P-54/56 16'> EOS	11/9/2010	3:27	P	2X2	X19	MR	P	11/10/10
134	DS-20	P-52/53 119'> BOS	11/9/2010	3:43	P	2X5	X19	MR	P	11/10/1[illegible]
135	AT	P-49/50/52	11/9/2010	3:47	P	1X1	X19	MR	P	11/10/
136	BO	P-49/50 11'> BOS	11/9/2010	3:49	P	2X2	X19	MR	P	11/10/10
137	DS-19	P-48/49 30'> BOS	11/9/2010	3:58	P	2X5	X19	MR	P	11/10/10
138	AT	P-48/49/50	11/9/2010	4:00	P	2X2	X19	MR	P	11/10/10
139	MD	P-35/33/32 6' W of Tie In	11/10/2010	9:01	C	2X51	X20	JV	P	11/10/10
140	FT	P-38/40 72'> EOS	11/9/2010	2:20	P	2X2	X20	JV	P	11/10/10
141	MD	P-43/44 65'> BOS	11/11/2010	7:00	P	2X2	X20	JV	P	11/11/10
142	AT	P-48/60/EL	11/13/2010	8:06	P	3X3	X20	JV	P	11/13/10
143	DS-22	P-48/60 30'> BOS	11/13/2010	8:47	P	2X6	X20	JV	P	11/13/10
144	BT	P-60/62 6'> BOS 10' South	11/13/2010	8:38	BT	6X12	X20	JV	P	11/13/10
145	AT	P-60/62/EL	11/13/2010	8:42	P	2X2	X20	JV	P	11/13/10
146	FT	P-83/EL 5'> EOS	11/13/2010	3:03	P	2X2	X19	MR	P	11/13/10
147	BO	P-60/62 37'> BOS	11/13/2010	8:58	P	2X4	X20	JV	P	11/13/10
148	WR	P-62/63 29'> BOS 5' into P-62	11/13/2010	9:10	P	2X2	X20	JV	P	11/13/10
149	BO	P-62/63 29'> BOS	11/13/2010	9:11	P	2X4	X20	JV	P	11/13/10
150	AT	P-62/63/EL	11/13/2010	9:17	P	2X4	X20	JV	P	11/13/10
151	AT	P-63/64/EL	11/13/2010	9:23	P	2X6	X20	JV	P	11/13/10
152	AT	P-64/66/EL	11/13/2010	9:27	P	2X2	X20	JV	P	11/13/10
153	AT	P-66/67/EL	11/13/2010	10:39	P	2X2	X20	JV	P	11/13/10
154	AT	P-67/68/EL	11/13/2010	10:43	P	2X2	X20	JV	P	11/13/10
155	AT	P-68/69/EL	11/13/2010	10:56	P	2X2	X20	JV	P	11/13/10
156	MD	P-69/EL 6'> EOS 1' into P-69	11/13/2010	11:01	P	1X1	X20	JV	P	11/13/10
157	AT	P-69/70/EL	11/13/2010	11:04	P	2X2	X20	JV	P	11/13/10
158	AT	P-70/72/EL	11/13/2010	11:20	P	2X2	X20	JV	P	11/13/10
159	BT/AT	P-72/73/EL	11/13/2010	11:41	BT	4X10	X20	JV	P	11/13/10
160	MD	P-72/73 10'> BOS 5' into P-72	11/13/2010	11:42	P	1X1	X20	JV	P	11/13/10

Defect Code:

BO - Burn Out
CR - Crease
DT - Destructive Test Number
EE - Earthwork Equipment Damage
FM – Fishmouth
FT – Pressure Test Cut
T – Joint
SI - Soil Surface Irregularity
DD - Deployment Damage
MD - Material Damage
WR - Wrinkle
WS - Welder restart
FD - Factory Defect
AT - Air Test

Repair Type: C-Cap Strip
P- Patch
B-Extrudate Bead
GB-Grind & Bead
BT-Boot

Test Result: P-Pass, F-Fail

Notations: BOS or 0-Beginning of Seam/ EOS-End of Seam/ --to an area/ >from an area/ NOAT-No AT

HALLATON, INC.

1206 SPARKS ROAD, SPARKS, MD 21152
410-583-7700 Fax 410-583-7720

Repair Log

Project No.: 1043-16310
Project Name: Johnston Co
Project Start Date: 11/3/2010
Project Location: Smithfield, NC
Page: 5 of 9

Material: LLDPE
Thickness: 30 mil

Repair #	Defect Code	Defect Location	Repair Date	Repair Time	Repair Type	Approx Size	Machine ID	Repair Tech	Vacuum Test	
									P/F	Date
161	AT	P-73/74/EL	11/13/2010	2:52	P	2X2	X20	JV	P	11/13/10
162	AT	P-74/76/EL	11/13/2010	2:56	P	2X2	X20	JV	P	11/13/10
163	AT	P-76/77/EL	11/13/2010	3:02	P	2X2	X20	JV	P	11/13/10
164	WS/AT	P-77/78/EL	11/13/2010	3:11	P	2X8	X20	JV	P	11/13/10
165	DS-30	P-77/78 12'> BOS	11/13/2010	3:17	P	2X5	X20	JV	P	11/13/10
166	WS/AT	P-78/80/EL	11/13/2010	3:32	C	2X16	X20	JV	P	11/13/10
167	AT	P-80/81/EL	11/13/2010	3:34	P	2X2	X20	JV	P	11/13/10
168	AT	P-81/82/EL	11/13/2010	3:06	P	2X2	X19	MR	P	11/15/10
169	AT	P-82/83/EL	11/13/2010	3:00	P	2X2	X19	MR	P	11/15/10
170	AT	P-83/84/EL	11/13/2010	11:37	P	2X2	X19	MR	P	11/15/10
171	AT	P-84/86/EL	11/13/2010	11:43	P	2X2	X19	MR	P	11/15/10
172	AT	P-86/87/EL	11/13/2010	3:12	P	2X2	X19	MR	P	11/15/10
173	DS-34	P-86/84 10'> EOS	11/13/2010	1:34	P	2X5	X19	MR	P	11/15/10
174	AT	P-84/85/86	11/13/2010	11:49	P	2X2	X19	MR	P	11/15/10
175	AT	P-85/86/87	11/13/2010	12:00	P	2X2	X19	MR	P	11/15/10
176	DS-33	P-82/83 166'> EOS	11/13/2010	1:45	P	2X5	X19	MR	P	11/13/10
177	AT	P-75/76/77	11/13/2010	2:42	P	2X3	X20	JV	P	11/13/10
178	WS/AT	P-74/75/76	11/13/2010	2:30	P	2X4	X20	JV	P	11/13/10
179	BO	P-73/74 108'> BOS	11/13/2010	2:12	P	2X2	X20	JV	P	11/13/10
180	FT	P-73/74 90'> EOS	11/13/2010	2:18	P	2X2	X20	JV	P	11/13/10
181	DS-27	P-71/73 61'> EOS	11/13/2010	2:22	P	2X5	X20	JV	P	11/13/10
182	AT	P-64/65/66	11/13/2010	10:10	P	2X2	X20	JV	P	11/13/10
183	AT	P-65/66/67	11/13/2010	10:05	P	1X4	X20	JV	P	11/13/10
184	MD	P-63/64 120'> BOS	11/13/2010	9:58	P	2X2	X20	JV	P	11/13/10
185	DS-23	P-61/63 75'> BOS	11/13/2010	9:55	P	2X5	X20	JV	P	11/13/10
186	DS-24	P-63/64 41'> BOS	11/13/2010	10:22	P	2X5	X20	JV	P	11/13/10
187	AT	P-60/61/62	11/13/2010	9:49	P	2X2	X20	JV	P	11/13/10
188	AT	P-61/62/63	11/13/2010	9:46	P	2X6	X20	JV	P	11/13/10
189	DS-25	P-67/68 24'> BOS	11/13/2010	10:35	P	6X2	X20	JV	P	11/13/10
190	BT	P-69/70 24'> BOS 8' S	11/13/2010	11:14	P	4X6	X20	JV	P	11/13/10
191	BO	P-69/70 61'> BOS	11/13/2010	11:26	P	2X2	X20	JV	P	11/13/10
192	AT	P-70/71/72	11/13/2010	11:42	P	2X4	X20	JV	P	11/13/10
193	AT	P-71/72/73	11/13/2010	11:55	P	3X3	X20	JV	P	11/13/10
194	MD	P-73/74 78'> BOS	11/13/2010	1:53	P	2X2	X20	JV	P	11/13/10
195	BO	P-73/74 86'> BOS	11/13/2010	1:51	P	2X3	X20	JV	P	11/13/10
196	MD	P-71/73 34'> BOS	11/13/2010	1:47	P	2X2	X20	JV	P	11/13/10
197	MD	P-71/73 38'> BOS	11/13/2010	1:45	P	2X2	X20	JV	P	11/13/10
198	DT-26	P-70/71 38'> BOS	11/13/2010	2:00	P	2X6	X20	JV	P	11/13/10
199	MD	P-73/74 132'> BOS	11/13/2010	2:02	P	2X2	X20	JV	P	11/13/10
200	DS-28	P-73/74 153'> BOS	11/13/2010	2:09	P	2X5	X20	JV	P	11/13/10

Defect Code:
BO - Burn Out
CR - Crease
DT - Destructive Test Number
EE - Earthwork Equipment Damage
FM – Fishmouth
FT – Pressure Test Cut
T – Joint
SI - Soil Surface Irregularity
DD - Deployment Damage
MD - Material Damage
WR - Wrinkle
WS - Welder restart
FD - Factory Defect
AT - Air Test

Repair Type: C-Cap Strip
P- Patch
B-Extrudate Bead
GB-Grind & Bead
BT-Boot

Test Result: P-Pass, F-Fail

Notations: BOS or 0-Beginning of Seam/ EOS-End of Seam/ --to an area/ >from an area/ NOAT-No AT

HALLATON, INC.

1206 SPARKS ROAD, SPARKS, MD 21152
410-583-7700 Fax 410-583-7720

Repair Log

Project No.: 1043-16310 Material: LLDPE
Project Name: Johnston Co
Project Start Date: 11/3/2010 Thickness: 30 mil
Project Location: Smithfield, NC
Page: 6 of 9

Repair #	Defect Code	Defect Location	Repair Date	Repair Time	Repair Type	Approx Size	Machine ID	Repair Tech	Vacuum Test	
									P/F	Date
201	BO	P-73/74 6'> EOS	11/13/2010	2:28	P	2X5	X20	JV	P	11/15/10
202	DS-29	P-75/77 33'> BOS	11/13/2010	2:38	P	2X5	X19	MR	P	11/15/10
203	FT	P-77/78 116'> EOS	11/13/2010	2:32	P	2X2	X19	MR	P	11/15/10
204	FT	P-77/78 145'> BOS	11/13/2010	2:45	P	2X2	X20	JV	P	11/15/10
205	FT	P-78/80 132'> BOS	11/13/2010	2:49	P	2X2	X19	MR	P	11/15/10
206	FT	P-78/80 108'> BOS	11/13/2010	2:45	P	2X2	X19	MR	P	11/15/10
207	FT	P-78/80 35'> BOS	11/13/2010	3:39	P	2X4	X20	JV	P	11/15/10
208	DS-32	P-81/82 39'> BOS	11/13/2010	2:53	P	2X5	X19	MR	P	11/15/10
209	AT	P-78/79/80	11/13/2010	1:55	P	2X2	X19	MR	P	11/15/10
210	AT	P-79/80/81	11/13/2010	2:00	P	2X2	X19	MR	P	11/15/10
211	DS-31	P-79/81 18'> BOS	11/13/2010	2:12	P	2X8	X19	MR	P	11/15/10
212	DS-35	P-85/87 27'> EOS	11/13/2010	1:52	P	2X5	X19	MR	P	11/15/10
213	BO	P-85/87 7'> EOS	11/13/2010	1:54	P	1X1	X19	MR	P	11/15/10
214	BT	P-92/94 9'> BOS 4' into P-92	11/15/2010	11:53	BT	4X9	X20	JV	P	11/15/10
215	AT	P-89/90/91	11/15/2010	12:00	P	2X2	X20	JV	P	11/15/1
216	WS/AT	P-88/89/90	11/15/2010	2:04	C	2X20	X20	JV	P	11/15/10
217	AT	P-92/93/94	11/15/2010	2:24	P	2X2	X20	JV	P	11/15/10
218	AT	P-93/94/95	11/15/2010	2:29	P	2X2	X20	JV	P	11/15/10
219	FT	P-95/96 58'> EOS	11/15/2010	2:34	P	2X2	X20	JV	P	11/15/10
220	BO	P-95/96 5'> EOS	11/15/2010	2:42	P	2X3	X20	JV	P	11/15/10
221	AT	P-96/97/98	11/15/2010	2:45	P	2X2	X20	JV	P	11/15/10
222	AT	P-97/98/99	11/15/2010	2:50	P	2X2	X20	JV	P	11/15/10
223	MD	P-87/EL 9'> BOS	11/15/2010	3:15	P	2X2	X20	JV	P	11/15/10
224	AT	P-87/88/EL	11/15/2010	3:19	P	2X3	X20	JV	P	11/15/10
225	AT	P-88/90/EL	11/15/2010	3:23	P	2X4	X20	JV	P	11/15/10
226	AT	P-90/91/EL	11/15/2010	3:27	P	2X2	X20	JV	P	11/15/10
227	AT	P-91/92/EL	11/15/2010	3:30	P	2X2	X20	JV	P	11/15/10
228	AT	P-92/94/EL	11/15/2010	3:35	P	2X3	X20	JV	P	11/15/10
229	AT	P-94/95/EL	11/15/2010	3:40	P	2X2	X20	JV	P	11/15/10
230	AT	P-95/96/EL	11/15/2010	3:44	P	2X2	X20	JV	P	11/15/10
231	BT	P-95/96 23'> BOS 4' into P-96	11/15/2010	3:54	BT	3X6	X20	JV	P	11/15/10
232	BO	P-96/EL 6'> BOS	11/15/2010	4:00	P	2X2	X20	JV	P	11/15/10
233	AT	P-96/98/EL	11/15/2010	4:01	P	2X2	X20	JV	P	11/15/10
234	AT	P-98/99/EL	11/15/2010	4:04	P	2X2	X20	JV	P	11/15/10
235	FT	P-99/EL 11'> BOS	11/15/2010	4:09	P	2X2	X20	JV	P	11/15/10
236	AT	P-99/100/EL	11/15/2010	4:11	P	2X2	X20	JV	P	11/15/10
237	MD	P-87/88 73'> BOS	11/15/2010	4:27	P	2X5	X20	JV	P	11/15/10
238	MD	P-87/88 98'> BOS	11/15/2010	4:31	P	2X2	X20	JV	P	11/15/10
239	MD	P-87/88 129'> BOS	11/15/2010	4:37	P	2X2	X20	JV	P	11/15/10
240	MD	P-87/88 173'> BOS	11/15/2010	4:42	P	2X2	X20	JV	P	11/15/10

Defect Code:

BO - Burn Out
CR - Crease
DT - Destructive Test Number
EE - Earthwork Equipment Damage
FM – Fishmouth
FT – Pressure Test Cut
T – Joint
SI - Soil Surface Irregularity
DD - Deployment Damage
MD - Material Damage
WR - Wrinkle
WS - Welder restart
FD - Factory Defect
AT - Air Test

Repair Type: C-Cap Strip, P- Patch, B-Extrudate Bead, GB-Grind & Bead, BT-Boot

Test Result: P-Pass, F-Fail

Notations: BOS or 0-Beginning of Seam/ EOS-End of Seam/ --to an area/ >from an area/ NOAT-No AT

HALLATON, INC.

1206 SPARKS ROAD, SPARKS, MD 21152
410-583-7700 Fax 410-583-7720

Repair Log

Project No.: 1043-16310
Project Name: Johnston Co
Project Start Date: 11/3/2010
Project Location: Smithfield, NC
Page: 7 of 9

Material: LLDPE
Thickness: 30 mil

Repair #	Defect Code	Defect Location	Repair Date	Repair Time	Repair Type	Approx Size	Machine ID	Repair Tech	Vacuum Test	
									P/F	Date
241	MD	P-87/88 221'> BOS	11/15/2010	4:46	P	2X2	X20	JV	P	11/15/10
242	MD	P-69/FL 7'> EOS 3' W	11/15/2010	4:56	P	2X2	X20	JV	P	11/15/10
243	DS-36	P-87/88 51'> BOS	11/17/2010	10:39	P	2X5	X20	JV	P	11/18/10
244	DS-42	P-88/FL 9'> BOS	11/17/2010	10:27	P	2X5	X20	JV	P	11/18/10
245	DS-39	P-95/96 38'> BOS	11/17/2010	10:44	P	2X5	X20	JV	P	11/18/10
246	DS-40	P-96/98 105'> EOS	11/17/2010	10:49	P	2X5	X20	JV	P	11/18/10
247	DS-37	P-88/89 54'> BOS	11/17/2010	11:13	P	2X5	X20	JV	P	11/18/10
248	DS-38	P-93/95 44'> EOS	11/17/2010	11:09	P	2X5	X20	JV	P	11/18/10
249	DS-41	P-99/100 58'> EOS	11/17/2010	11:02	P	2X5	X20	JV	P	11/18/10
250	DP-23	P-82/83 133'> EOS 6' into P-83	11/17/2010	2:00	P	13X17	X20	JV	P	11/18/10
251	DP-23	P-82/83 92'> EOS 9' into P-83	11/17/2010	3:00	P	13X17	X20	JV	P	11/18/10
252	DP-11	P-44/45 8'> EOS 5' into P-44	11/17/2010	4:30	P	13X17	X20	JV	P	11/18/10
253	DP-12	P-30/31 9'> EOS 5' into P-30	11/17/2010	4:50	P	12X16	X20	JV	P	11/18/10
254	SI	P-95/96 10'> BOS 10' into P-96	11/18/2010	10:30	P	3X7	X20	GP	P	11/18/10
255	WS	P-117/113/114	11/19/2010	3:12	C	2X9	M8	CS	P	11/20/10
256	AT	P-100/101/FL	11/20/2010	8:17	P	2X3	X20	JV	P	11/20/10
257	AT	P-101/102/FL	11/20/2010	8:23	P	2X2	X20	JV	P	11/20/10
258	FT	P-102/FL 9'> EOS	11/20/2010	8:26	P	1X1	X20	JV	P	11/20/10
259	AT	P-102/103/FL	11/20/2010	8:31	P	1X1	X20	JV	P	11/20/10
260	AT	P-103/104/FL	11/20/2010	8:37	P	2X2	X20	JV	P	11/20/10
261	AT	P-104/105/FL	11/20/2010	8:40	P	2X2	X20	JV	P	11/20/10
262	BO	P-105/FL 9'> BOS	11/20/2010	8:45	P	1X6	X20	JV	P	11/20/10
263	AT	P-105/106/FL	11/20/2010	8:50	P	2X2	X20	JV	P	11/20/10
264	BO	P-104/105 33'> BOS	11/20/2010	8:52	P	2X2	X20	JV	P	11/20/10
265	FT	P-106/FL 10'> EOS	11/20/2010	8:53	P	1X1	X20	JV	P	11/20/10
266	AT	P-106/108/FL	11/20/2010	8:56	P	1X2	X20	JV	P	11/20/10
267	AT	P-108/109/FL	11/20/2010	8:59	P	1X2	X20	JV	P	11/20/10
268	AT	P-109/110/FL	11/20/2010	9:03	P	2X2	X20	JV	P	11/20/10
269	AT	P-110/112/FL	11/20/2010	9:13	P	1X2	X20	JV	P	11/20/10
270	FT	P-112/FL 18'> BOS	11/20/2010	9:15	P	1X3	X20	JV	P	11/20/10
271	BO	P-112/FL 13'> BOS	11/20/2010	9:18	P	1X2	X20	JV	P	11/20/10
272	AT	P-112/113/115/FL	11/20/2010	9:20	P	3X3	X20	JV	P	11/20/10
273	AT	P-115/116/FL	11/20/2010	9:29	P	2X3	X20	JV	P	11/20/10
274	AT	P-116/118/FL	11/20/2010	9:33	P	1X2	X20	JV	P	11/20/10
275	WS/FT	P-118/FL 7'> BOS	11/20/2010	9:47	P	2X6	X20	JV	P	11/20/10
276	AT	P-118/119/FL	11/20/2010	9:50	P	1X2	X20	JV	P	11/20/10
277	WS/AT	P-119/120/FL	11/20/2010	10:03	P	2X7	X20	JV	P	11/20/10
278	AT	P-120/121/FL	11/20/2010	10:17	P	1X2	X20	JV	P	11/20/10
279	WS/AT	P-121/123/FL	11/20/2010	10:28	P	2X2	X20	JV	P	11/20/10
280	WS/AT	P-125/131/132	11/20/2010	10:56	C	2X12	X20	JV	P	11/20/10

Defect Code:
BO - Burn Out
CR - Crease
DT - Destructive Test Number
EE - Earthwork Equipment Damage
FM – Fishmouth
FT – Pressure Test Cut
T – Joint
SI - Soil Surface Irregularity
DD - Deployment Damage
MD - Material Damage
WR - Wrinkle
WS - Welder restart
FD - Factory Defect
AT - Air Test

Repair Type: C-Cap Strip
P- Patch
B-Extrudate Bead
GB-Grind & Bead
BT-Boot

Test Result: P-Pass, F-Fail

Notations: BOS or 0-Beginning of Seam/ EOS-End of Seam/ --to an area/ >from an area/ NOAT-No AT

HALLATON, INC.

1206 SPARKS ROAD, SPARKS, MD 21152
410-583-7700 Fax 410-583-7720

Repair Log

Project No.: 1043-16310
Project Name: Johnston Co
Project Start Date: 11/3/2010
Project Location: Smithfield, NC
Page: 8 of 9

Material: LLDPE
Thickness: 30 mil

Repair #	Defect Code	Defect Location	Repair Date	Repair Time	Repair Type	Approx Size	Machine ID	Repair Tech	Vacuum Test	
									P/F	Date
281	BO	P-124/125 12'> BOS	11/20/2010	10:38	P	2X2	X20	JV	P	11/20/10
282	AT	P-124/125/126	11/20/2010	10:41	P	2X2	X20	JV	P	11/20/10
283	AT	P-124/126/127	11/20/2010	10:44	P	2X2	X20	JV	P	11/20/10
284	WS/AT	P-124/127/128	11/20/2010	11:05	P	2X7	X20	JV	P	11/20/10
285	BO	P-124/128 9'> EOS	11/20/2010	11:11	P	2X2	X20	JV	P	11/20/10
286	BO	P-124/128 16'> EOS	11/20/2010	11:14	P	2X2	X20	JV	P	11/20/10
287	FT/AT	P-124/128/129	11/20/2010	11:35	C	2X19	X20	JV	P	11/20/10
288	BO	P-124/129 8'> EOS	11/20/2010	11:39	P	2X4	X20	JV	P	11/20/10
289	BO	P-124/129 7'> BOS	11/20/2010	11:57	P	2X3	X20	JV	P	11/20/10
290	AT	P-124/129/130	11/20/2010	11:52	P	2X4	X20	JV	P	11/20/10
291	FT	P-128/129 14'> BOS	11/20/2010	11:43	P	2X2	X20	JV	P	11/20/10
292	FT	P-128/129 8'> BOS	11/20/2010	11:46	P	2X2	X20	JV	P	11/20/10
293	FT	P-128/127 3'> EOS	11/20/2010	12:10	P	2X2	X20	JV	P	11/20/10
294	FT	P-127/128 6'> EOS	11/20/2010	12:11	P	2X2	X20	JV	P	11/20/1
295	MD	P-124/128 6'> EOS	11/20/2010	1:58	P	2X2	X20	JV	P	11/20/
296	AT	P-122/124/123	11/20/2010	1:48	P	2X3	X20	JV	P	11/20/10
297	WS/AT	P-121/122/123	11/20/2010	1:55	P	2X6	X20	JV	P	11/20/10
298	DS-49	P-119/120 54'> EOS	11/20/2010	12:21	P	2X5	X20	JV	P	11/20/10
299	DS-48	P-115/116 83'> BOS	11/20/2010	3:00	P	2X5	X20	JV	P	11/20/10
300	AT	P-112/113/114	11/20/2010	11:50	P	2X6	X20	JV	P	11/20/10
301	AT	P-111/112/114	11/20/2010	11:43	P	2X2	X19	GP	P	11/20/10
302	AT	P-110/111/112	11/20/2010	11:37	P	2X3	X19	GP	P	11/20/10
303	AT	P-113/114/117/R-225	11/20/2010	11:31	P	2X4	X19	GP	P	11/20/10
304	AT	P-111/117 4'> BOS 3' into P-111	11/20/2010	3:10	P	10X22	X19	GP	P	11/20/10
305	AT	P-111/114/117	11/20/2010	11:28	P	2X2	X19	GP	P	11/20/10
306	AT	P-107/108/109	11/20/2010	11:12	P	2X2	X19	GP	P	11/20/10
307	AT	P-106/107/108	11/20/2010	11:04	P	2X2	X19	GP	P	11/20/10
308	MD	P-105/106 65'> EOS	11/20/2010	11:57	P	2X2	X19	GP	P	11/20/10
309	DS-45	P-103/104 41'> EOS	11/20/2010	1:50	P	2X5	X19	GP	P	11/20/10
310	MD	P-104/105 121'> BOS	11/20/2010	12:07	P	2X2	X19	GP	P	11/20/10
311	DS-44	P-101/102 95'> BOS	11/20/2010	2:09	P	2X5	X19	GP	P	11/20/10
312	DS-43	P-100/101 34'> BOS	11/20/2010	2:15	P	2X5	X19	GP	P	11/20/10
313	DS-46	P-106/108 30'> BOS	11/20/2010	2:33	P	2X5	X19	GP	P	11/20/10
314	MD	P-110/EL 6'> EOS	11/20/2010	2:40	P	2X2	X19	GP	P	11/20/10
315	DS-47	P-110/112 32'> BOS	11/20/2010	2:53	P	2X5	X19	GP	P	11/20/10
316	DP-22	P-109/110 128'> BOS 7' into P-110	11/20/2010	3:32	P	13X13	X19	GP	P	11/20/10
317	DS-54	P-116/EL 13'> BOS	11/20/2010	3:48	P	2X5	X19	GP	P	11/20/10
318	DS-50	P-127/128 33'> EOS	11/20/2010	2:28	P	1X5	X20	JV	P	11/20/10
319	DS-51	P-126/127 28'> BOS	11/20/2010	2:45	P	2X5	X20	JV	P	11/20/10
320	FT	P-131/125 6'> EOS	11/20/2010	2:30	P	2X2	X20	JV	P	11/20/10

Defect Code:

BO - Burn Out
CR - Crease
DT - Destructive Test Number
EE - Earthwork Equipment Damage
FM – Fishmouth
FT – Pressure Test Cut
T – Joint
SI - Soil Surface Irregularity
DD - Deployment Damage
MD - Material Damage
WR - Wrinkle
WS - Welder restart
FD - Factory Defect
AT - Air Test

Repair Type: C-Cap Strip, P- Patch, B-Extrudate Bead, GB-Grind & Bead, BT-Boot

Test Result: P-Pass, F-Fail

Notations: BOS or 0-Beginning of Seam/ EOS-End of Seam/ --to an area/ >from an area/ NOAT-No AT

HALLATON, INC.

1206 SPARKS ROAD, SPARKS, MD 21152
410-583-7700 Fax 410-583-7720

Repair Log

Project No.: 1043-16310
Project Name: Johnston Co
Project Start Date: 11/3/2010
Project Location: Smithfield, NC
Page: 9 of 9

Material: LLDPE
Thickness: 30 mil

Repair #	Defect Code	Defect Location	Repair Date	Repair Time	Repair Type	Approx Size	Machine ID	Repair Tech	Vacuum Test	
									P/F	Date
321	DS-52	P-133/134 26'> EOS	11/20/2010	3:10	P	2X5	X20	JV	P	11/20/10
322	FT	P-133/134 49'> BOS	11/20/2010	2:50	P	2X2	X20	JV	P	11/20/10
323	FT	P-133/134 40'> BOS	11/20/2010	2:48	P	2X2	X20	JV	P	11/20/10
324	BO	P-134/135 9'> EOS	11/20/2010	2:56	P	2X4	X20	JV	P	11/20/10
325	DS-53	P-137/136 28'> BOS	11/20/2010	3:23	P	2X6	X20	JV	P	11/20/10
326	BT	P-136/137 35'> BOS 11' into P-137	11/20/2010	4:01	BT	6X7	X20	JV	P	11/20/10
327	AT	P-136/137/FL	11/20/2010	4:13	P	2X2	X20	JV	P	11/20/10
328	AT	P-135/136/FL	11/20/2010	4:07	P	1X2	X20	JV	P	11/20/10
329	AT	P-134/135/FL	11/20/2010	4:16	P	2X2	X20	JV	P	11/20/10
330	AT	P-133/134/FL	11/20/2010	4:23	P	2X2	X20	JV	P	11/20/10
331	AT	P-131/133/FL	11/20/2010	4:18	P	2X2	X19	GP	P	11/20/10
332	FT	P-131/FL 4'> BOS	11/20/2010	4:15	P	2X2	X19	GP	P	11/20/10
333	AT	P-131/132/FL	11/20/2010	4:10	P	2X2	X19	GP	P	11/20/10
334	AT	P-124/125/132/FL	11/20/2010	4:05	P	2X3	X19	GP	P	11/20/10
335	AT	P-123/124/FL	11/20/2010	3:59	P	2X3	X19	GP	P	11/20/10
336	DP-21	P-120/121 9'> EOS	11/20/2010	4:45	P	18X22	X20	JV	P	11/20/10
337	MD	P-116/118 7'> EOS	11/20/2010	4:55	P	1X2	X20	JV	P	11/20/10
338	MD	P-115/116 75'> EOS	11/20/2010	5:00	P	1X1	X20	JV	P	11/20/10

Defect Code:
BO - Burn Out
CR - Crease
DT - Destructive Test Number
EE - Earthwork Equipment Damage
FM – Fishmouth
FT – Pressure Test Cut
T – Joint
SI - Soil Surface Irregularity
DD - Deployment Damage
MD - Material Damage
WR - Wrinkle
WS - Welder restart
FD - Factory Defect
AT - Air Test

Repair Type: C-Cap Strip
P- Patch
B-Extrudate Bead
GB-Grind & Bead
BT-Boot

Test Result: P-Pass, F-Fail

Notations: BOS or 0-Beginning of Seam/ EOS-End of Seam/ --to an area/ >from an area/ NOAT-No AT

Appendix H

Drainage Geocomposite CQA Data

H1. Manufacturer's Product Data Submittals and Quality Control Certificates

H2. Geosynthetics Inventory - Drainage Geocomposite

H3. CQA Test Results - Material Control Tests

GSE

The Pioneer Of Geosynthetics

Product Data Sheet

GSE FabriNet HS Geocomposite

GSE FabriNet HS geocomposite consists of a 275 mil thick GSE HyperNet HS geonet heat-laminated on one or both sides with a GSE nonwoven needlepunched geotextile. The geotextile is available in mass per unit area range of 6 oz/yd² (200 g/m²) to 16 oz/yd² (540 g/m²). The geocomposite is designed and formulated to perform drainage function under a range of anticipated site loads, gradients and boundary conditions.

Product Specifications

TESTED PROPERTY	TEST METHOD	FREQUENCY	MINIMUM AVERAGE VALUE[1]		
Geocomposite			**6 oz/yd²**	**8 oz/yd²**	**10 oz/yd²**
Transmissivity[2], gal/min/ft (m²/sec)	ASTM D 4716	1/540,000 ft²			
Double-Sided Composite			3.4 (7 x 10^{-4})	3.4 (7 x 10^{-4})	2.4 (5 x 10^{-4})
Single-Sided Composite			9.6 (2 x 10^{-3})	9.6 (2 x 10^{-3})	7.2 (1.5 x 10^{-3})
Ply Adhesion, lb/in (g/cm)	ASTM D 7005	1/50,000 ft²	1.0 (178)	1.0 (178)	1.0 (178)
Geonet Core[3] - GSE HyperNet HS					
Transmissivity[2], gal/min/ft (m²/sec)	ASTM D 4716		28.98 (6 x 10^{-3})	28.98 (6 x 10^{-3})	28.98 (6 x 10^{-3})
Density, g/cm³	ASTM D 1505	1/50,000 ft²	0.94	0.94	0.94
Tensile Strength (MD), lb/in (N/mm)	ASTM D 5035/7179	1/50,000 ft²	65 (11.5)	65 (11.5)	65 (11.5)
Carbon Black Content, %	ASTM D 1603*/4218	1/50,000 ft²	2.0	2.0	2.0
Geotextile[3,4]					
Mass per Unit Area, oz/yd²(g/m²)	ASTM D 5261	1/90,000 ft²	6 (200)	8 (270)	10 (335)
Grab Tensile, lb (N)	ASTM D 4632	1/90,000 ft²	160 (710)	220 (975)	260 (1,155)
Puncture Strength, lb (N)	ASTM D 4833	1/90,000 ft²	90 (395)	120 (525)	165 (725)
AOS, US sieve (mm)	ASTM D 4751	1/540,000 ft²	70 (0.212)	80 (0.180)	100 (0.150)
Permittivity, (sec⁻²)	ASTM D 4491	1/540,000 ft²	1.5	1.3	1.0
Flow Rate, gpm/ft² (lpm/m²)	ASTM D 4491	1/540,000 ft²	110 (4,480)	95 (3,865)	75 (3,050)
UV Resistance, % retained	ASTM D 4355 (after 500 hours)	once per formulation	70	70	70
NOMINAL ROLL DIMENSIONS					
Geonet Core Thickness, mil (mm)	ASTM D 5199	1/50,000 ft²	275 (7)	275 (7)	275 (7)
Roll Width[5], ft (m)			15 (4.5)	15 (4.5)	15 (4.5)
Roll Length[5], ft (m)	Double-Sided Composite		212 (64.6)	200 (61.0)	190 (57.9)
	Single-Sided Composite		240 (73.2)	240 (73.2)	230 (70.1)
Roll Area, ft² (m²)	Double-Sided Composite		3,180 (295)	3,000 (279)	2,850 (265)
	Single-Sided Composite		3,600 (334)	3,600 (334)	3,450 (321)

NOTES:

- [1] AOSin mm is a maximum value.
- [2] Gradient of 0.1, normal load of 10,000 psf, water at 70°F between steel plates for 15 minutes. Contact GSE for performance transmissivity value for use in design.
- [3] Component properties prior to lamination.
- [4] Refer to geotextile product data sheet for additional specifications.
- [5] Roll widths and lengths have a tolerance of ±1%.
- *Modified.

NORTH AMERICA 800 435 2008 281.443.8564 · EUROPE & AFRICA 49 40 767420 · ASIA PACIFIC 66.2.937.0091 · SOUTH AMERICA 56 2 595 4200 · MIDDLE EAST 20.23.828.8888

gseworld.com

This information is provided for reference purposes only and is not intended as a warranty or guarantee. GSE assumes no liability in connection with the use of this information. Specifications subject to change without notice.

GSE and other trademarks in this document are registered trademarks of GSE Lining Technology, LLC in the United States and certain foreign countries.

Engineered Systhetic Products, Inc.

November 23, 2010
Hallaton Inc.

Ref. : Johnston Co LF, NC
Customer P.O. # P7294
Product : TN 300-2-6

We certify that the TN 300-2-6 drainage composite, meets the project requirements as stated in the specifications. The properties listed in this section are:

Property	Test Method	Unit	Required Value	Qualifier
Geonet[3]				
Mass per Unit Area	ASTM D 5261	lbs/ft^2	0.197	Minimum
Thickness	ASTM D 5199	mil	250	Minimum
Carbon Black	ASTM D 4218	%	2.0-3.0	Range
Tensile Strength	ASTM D 5035	lbs/in	75	Minimum
Melt Flow	ASTM D 1238[2]	g/10 min	1.0	Maximum
Density	ASTM D 1505	g/cm^3	0.94	Minimum
Composite				
Ply Adhesion	ASTM D 7005	lb/in	2.0	MARV[5]
Transmissivity[1]	ASTM D 4716	m^2/sec	1.0×10^{-3}	MARV
Geotextile[3 & 4]				
Fabric Weight	ASTM D 5261	oz/yd^2	6.0	MARV
Grab Strength	ASTM D 4632	lbs	160	MARV
Grab Elongation	ASTM D 4632	%	50	MARV
Puncture Resistance	ASTM D 4833	lbs	55	MARV
Permittivity	ASTM D 4491	sec^{-1}	1.0	MARV
AOS	ASTM D 4751	US Sieve	70	MARV
UV Resistance	ASTM D 4355	%/hrs	70/500	MARV

Notes:

1 Transmissivity measured using water at 21 ± 2 °C (70 ± 4 °F) with a gradient of 0.25 and a confining pressure of 1000 psf between sand and liner after 24 hours.

2 Condition 190/2.16

3 Geotextile and Geonet properties are prior to lamination.

4 Geotextile data is provided by the supplier.

5 MARV is statistically defined as mean minus two standard deviations and it is the value which is exceeded by 97.5% of all the test data.

Sincerely,

Nilay Patel

Nilay Patel
QA Manager

APPROVED 5 QA

571 Industrial Parkway, Commerce, GA 30529 Ph : 706-336-7000 Fax : 706-336-7007 Email : info@skaps.com

GSE Roll Allocation

Order 62244
Customer Hallaton, Inc.
Site Johnston County Area 1 Closure

Roll#	*Resin Lot*	*Product Code*	*Description*	*Mfg. Date*	*Length*
131312213	CYF610972	FS2-275E-06-06-E-00	FS2-275E-06-06-E-00	8/5/2009	180
131312214	CYF610972	FS2-275E-06-06-E-00	FS2-275E-06-06-E-00	8/5/2009	180
131312215	CYF610972	FS2-275E-06-06-E-00	FS2-275E-06-06-E-00	8/6/2009	180
131313575	CYG610060	FS2-275E-06-06-E-00	FS2-275E-06-06-E-00	8/26/2009	212
131313576	CYG610060	FS2-275E-06-06-E-00	FS2-275E-06-06-E-00	8/26/2009	212
131313577	CYG610060	FS2-275E-06-06-E-00	FS2-275E-06-06-E-00	8/26/2009	212
131313580	CYG610060	FS2-275E-06-06-E-00	FS2-275E-06-06-E-00	8/26/2009	212
131313581	CYG610060	FS2-275E-06-06-E-00	FS2-275E-06-06-E-00	8/26/2009	212
131313582	CYG610060	FS2-275E-06-06-E-00	FS2-275E-06-06-E-00	8/26/2009	212
131313583	CYG610060	FS2-275E-06-06-E-00	FS2-275E-06-06-E-00	8/26/2009	212
131313594	CYG610060	FS2-275E-06-06-E-00	FS2-275E-06-06-E-00	8/27/2009	212
131313595	CYG610060	FS2-275E-06-06-E-00	FS2-275E-06-06-E-00	8/27/2009	212
131331843	CYK610831	FS2-275E-06-06-E-00	FS2-275E-06-06-E-00	12/4/2009	212
131331844	CYK610831	FS2-275E-06-06-E-00	FS2-275E-06-06-E-00	12/4/2009	212
131331845	CYK610831	FS2-275E-06-06-E-00	FS2-275E-06-06-E-00	12/4/2009	212
131331846	CYK610831	FS2-275E-06-06-E-00	FS2-275E-06-06-E-00	12/4/2009	212
131338071	CAB610821	FS2-275E-06-06-E-00	FS2-275E-06-06-E-00	3/26/2010	212
131338072	CAB610821	FS2-275E-06-06-E-00	FS2-275E-06-06-E-00	3/26/2010	212
131338073	CAB610821	FS2-275E-06-06-E-00	FS2-275E-06-06-E-00	3/26/2010	212
131338074	CAB610821	FS2-275E-06-06-E-00	FS2-275E-06-06-E-00	3/26/2010	212
131338075	CAB610821	FS2-275E-06-06-E-00	FS2-275E-06-06-E-00	3/26/2010	212
131338076	CAB610821	FS2-275E-06-06-E-00	FS2-275E-06-06-E-00	3/26/2010	212
131338078	CAB610821	FS2-275E-06-06-E-00	FS2-275E-06-06-E-00	3/26/2010	212
131338079	CAB610821	FS2-275E-06-06-E-00	FS2-275E-06-06-E-00	3/26/2010	212
131338080	CAB610821	FS2-275E-06-06-E-00	FS2-275E-06-06-E-00	3/26/2010	212
131338081	CAB610821	FS2-275E-06-06-E-00	FS2-275E-06-06-E-00	3/26/2010	212
131338082	CAB610821	FS2-275E-06-06-E-00	FS2-275E-06-06-E-00	3/26/2010	212
131338083	CAB610821	FS2-275E-06-06-E-00	FS2-275E-06-06-E-00	3/26/2010	212
131338084	CAB610821	FS2-275E-06-06-E-00	FS2-275E-06-06-E-00	3/26/2010	212
131338085	CAB610821	FS2-275E-06-06-E-00	FS2-275E-06-06-E-00	3/26/2010	212
131338086	CAB610821	FS2-275E-06-06-E-00	FS2-275E-06-06-E-00	3/26/2010	212
131338087	CAB610821	FS2-275E-06-06-E-00	FS2-275E-06-06-E-00	3/26/2010	212
131338088	CAB610821	FS2-275E-06-06-E-00	FS2-275E-06-06-E-00	3/26/2010	212
131338089	CAB610821	FS2-275E-06-06-E-00	FS2-275E-06-06-E-00	3/26/2010	212

Order 62244
Customer Hallaton, Inc.
Site Johnston County Area 1 Closure

Roll#	*Resin Lot*	*Product Code*	*Description*	*Mfg. Date*	*Length*
131338090	CAB610821	FS2-275E-06-06-E-00	FS2-275E-06-06-E-00	3/26/2010	212
131338091	CAB610821	FS2-275E-06-06-E-00	FS2-275E-06-06-E-00	3/26/2010	212
131338092	CAB610821	FS2-275E-06-06-E-00	FS2-275E-06-06-E-00	3/26/2010	212
131338093	CAB610821	FS2-275E-06-06-E-00	FS2-275E-06-06-E-00	3/26/2010	212
131338094	CAB610821	FS2-275E-06-06-E-00	FS2-275E-06-06-E-00	3/26/2010	212
131338095	CAB610821	FS2-275E-06-06-E-00	FS2-275E-06-06-E-00	3/26/2010	212
131338096	CAB610821	FS2-275E-06-06-E-00	FS2-275E-06-06-E-00	3/26/2010	182
131338097	CAB610821	FS2-275E-06-06-E-00	FS2-275E-06-06-E-00	3/26/2010	212
131338098	CAB610821	FS2-275E-06-06-E-00	FS2-275E-06-06-E-00	3/26/2010	212
131338099	CAB610821	FS2-275E-06-06-E-00	FS2-275E-06-06-E-00	3/26/2010	212
131338100	CAB610821	FS2-275E-06-06-E-00	FS2-275E-06-06-E-00	3/26/2010	212
131338101	CAB610821	FS2-275E-06-06-E-00	FS2-275E-06-06-E-00	3/26/2010	212
131338102	CAB610821	FS2-275E-06-06-E-00	FS2-275E-06-06-E-00	3/26/2010	212
131338103	CAB610821	FS2-275E-06-06-E-00	FS2-275E-06-06-E-00	3/26/2010	212
131338104	CAB610821	FS2-275E-06-06-E-00	FS2-275E-06-06-E-00	3/26/2010	212
131338105	CAB610821	FS2-275E-06-06-E-00	FS2-275E-06-06-E-00	3/26/2010	212
131338106	CAB610821	FS2-275E-06-06-E-00	FS2-275E-06-06-E-00	3/26/2010	212
131338107	CAB610821	FS2-275E-06-06-E-00	FS2-275E-06-06-E-00	3/26/2010	212
131338108	CAB610821	FS2-275E-06-06-E-00	FS2-275E-06-06-E-00	3/26/2010	212
131338109	CAB610821	FS2-275E-06-06-E-00	FS2-275E-06-06-E-00	3/26/2010	212
131338110	CAB610821	FS2-275E-06-06-E-00	FS2-275E-06-06-E-00	3/26/2010	212
131338111	CAB610821	FS2-275E-06-06-E-00	FS2-275E-06-06-E-00	3/26/2010	212
131338112	CAB610821	FS2-275E-06-06-E-00	FS2-275E-06-06-E-00	3/26/2010	212
131338113	CAB610821	FS2-275E-06-06-E-00	FS2-275E-06-06-E-00	3/26/2010	212
131338114	CAB610821	FS2-275E-06-06-E-00	FS2-275E-06-06-E-00	3/26/2010	212
131338115	CAB610821	FS2-275E-06-06-E-00	FS2-275E-06-06-E-00	3/26/2010	212
131338116	CAB610821	FS2-275E-06-06-E-00	FS2-275E-06-06-E-00	3/26/2010	212
131338117	CAB610821	FS2-275E-06-06-E-00	FS2-275E-06-06-E-00	3/26/2010	212
131338118	CAB610821	FS2-275E-06-06-E-00	FS2-275E-06-06-E-00	3/26/2010	212
131338119	CAB610821	FS2-275E-06-06-E-00	FS2-275E-06-06-E-00	3/26/2010	212
131338120	CAB610821	FS2-275E-06-06-E-00	FS2-275E-06-06-E-00	3/26/2010	212
131338121	CAB610821	FS2-275E-06-06-E-00	FS2-275E-06-06-E-00	3/26/2010	212
131338126	CAB610821	FS2-275E-06-06-E-00	FS2-275E-06-06-E-00	3/26/2010	212
131338127	CAB610821	FS2-275E-06-06-E-00	FS2-275E-06-06-E-00	3/26/2010	212
131338128	CAB610821	FS2-275E-06-06-E-00	FS2-275E-06-06-E-00	3/26/2010	212
131338129	CAB610821	FS2-275E-06-06-E-00	FS2-275E-06-06-E-00	3/26/2010	212

Order 62244
Customer Hallaton, Inc.
Site Johnston County Area 1 Closure

Roll#	*Resin Lot*	*Product Code*	*Description*	*Mfg. Date*	*Length*
131338130	CAB610821	FS2-275E-06-06-E-00	FS2-275E-06-06-E-00	3/26/2010	212
131338131	CAB610821	FS2-275E-06-06-E-00	FS2-275E-06-06-E-00	3/26/2010	212
131338132	CAB610821	FS2-275E-06-06-E-00	FS2-275E-06-06-E-00	3/26/2010	212
131338133	CAB610821	FS2-275E-06-06-E-00	FS2-275E-06-06-E-00	3/26/2010	212
131338134	CAB610821	FS2-275E-06-06-E-00	FS2-275E-06-06-E-00	3/26/2010	212
131338135	CAB610821	FS2-275E-06-06-E-00	FS2-275E-06-06-E-00	3/26/2010	212
131338136	CAB610821	FS2-275E-06-06-E-00	FS2-275E-06-06-E-00	3/26/2010	212
131338137	CAB610821	FS2-275E-06-06-E-00	FS2-275E-06-06-E-00	3/26/2010	212
131338138	CAB610821	FS2-275E-06-06-E-00	FS2-275E-06-06-E-00	3/26/2010	212
131338139	CAB610821	FS2-275E-06-06-E-00	FS2-275E-06-06-E-00	3/26/2010	212
131338140	CAB610821	FS2-275E-06-06-E-00	FS2-275E-06-06-E-00	3/26/2010	212
131338141	CAB610821	FS2-275E-06-06-E-00	FS2-275E-06-06-E-00	3/26/2010	212
131338142	CAB610821	FS2-275E-06-06-E-00	FS2-275E-06-06-E-00	3/26/2010	212
131338143	CAB610821	FS2-275E-06-06-E-00	FS2-275E-06-06-E-00	3/26/2010	212
131338144	CAB610821	FS2-275E-06-06-E-00	FS2-275E-06-06-E-00	3/26/2010	212
131338145	CAB610821	FS2-275E-06-06-E-00	FS2-275E-06-06-E-00	3/26/2010	212
131338146	CAB610821	FS2-275E-06-06-E-00	FS2-275E-06-06-E-00	3/26/2010	212
131338147	CAB610821	FS2-275E-06-06-E-00	FS2-275E-06-06-E-00	3/26/2010	212
131338148	CAB610821	FS2-275E-06-06-E-00	FS2-275E-06-06-E-00	3/26/2010	212
131338149	CAB610821	FS2-275E-06-06-E-00	FS2-275E-06-06-E-00	3/26/2010	212
131338150	CAB610821	FS2-275E-06-06-E-00	FS2-275E-06-06-E-00	3/26/2010	212
131338151	CAB610821	FS2-275E-06-06-E-00	FS2-275E-06-06-E-00	3/26/2010	212
131338152	CAB610821	FS2-275E-06-06-E-00	FS2-275E-06-06-E-00	3/26/2010	212
131338153	CAB610821	FS2-275E-06-06-E-00	FS2-275E-06-06-E-00	3/26/2010	212
131338154	CAB610821	FS2-275E-06-06-E-00	FS2-275E-06-06-E-00	3/26/2010	212
131338155	CAB610821	FS2-275E-06-06-E-00	FS2-275E-06-06-E-00	3/27/2010	212
131338156	CAB610821	FS2-275E-06-06-E-00	FS2-275E-06-06-E-00	3/27/2010	212
131338157	CAB610821	FS2-275E-06-06-E-00	FS2-275E-06-06-E-00	3/27/2010	212
131338158	CAB610821	FS2-275E-06-06-E-00	FS2-275E-06-06-E-00	3/27/2010	212
131338159	CAB610821	FS2-275E-06-06-E-00	FS2-275E-06-06-E-00	3/27/2010	212
131338160	CAB610821	FS2-275E-06-06-E-00	FS2-275E-06-06-E-00	3/27/2010	212
131338161	CAB610821	FS2-275E-06-06-E-00	FS2-275E-06-06-E-00	3/27/2010	212
131338162	CAB610821	FS2-275E-06-06-E-00	FS2-275E-06-06-E-00	3/27/2010	212
131338163	CAB610821	FS2-275E-06-06-E-00	FS2-275E-06-06-E-00	3/27/2010	212
131338164	CAB610821	FS2-275E-06-06-E-00	FS2-275E-06-06-E-00	3/27/2010	212
131338165	CAB610821	FS2-275E-06-06-E-00	FS2-275E-06-06-E-00	3/27/2010	212

Order 62244
Customer Hallaton, Inc.
Site Johnston County Area 1 Closure

Roll#	*Resin Lot*	*Product Code*	*Description*	*Mfg. Date*	*Length*
131338166	CAB610821	FS2-275E-06-06-E-00	FS2-275E-06-06-E-00	3/27/2010	212
131338191	CAB610822	FS2-275E-06-06-E-00	FS2-275E-06-06-E-00	3/27/2010	212

GSE

Geocomposite Traceability

Customer Hallaton, Inc.
Location Smithfield, NC

Job Name Johnston County Area 1
Order 62244

Roll_No	*Product*	*Resin Lot*	*Top Geo*	*Bottom Geo*
131312213	FS2-275E-06-06-E-00	CYF610972	130347831	130347838
131312214	FS2-275E-06-06-E-00	CYF610972	130347831	130347838
131312215	FS2-275E-06-06-E-00	CYF610972	130347836	130347837
131313575	FS2-275E-06-06-E-00	CYG610060	130349186	130349175
131313576	FS2-275E-06-06-E-00	CYG610060	130349186	130349175
131313577	FS2-275E-06-06-E-00	CYG610060	130349176	130349177
131313580	FS2-275E-06-06-E-00	CYG610060	130349176	130349177
131313581	FS2-275E-06-06-E-00	CYG610060	130349176	130349177
131313582	FS2-275E-06-06-E-00	CYG610060	130349176	130349177
131313583	FS2-275E-06-06-E-00	CYG610060	130349176	130349177
131313594	FS2-275E-06-06-E-00	CYG610060	130349185	130349178
131313595	FS2-275E-06-06-E-00	CYG610060	130349185	130349178
131331843	FS2-275E-06-06-E-00	CYK610831	130354588	130354132
131331844	FS2-275E-06-06-E-00	CYK610831	130354588	130354132
131331845	FS2-275E-06-06-E-00	CYK610831	130354588	130354132
131331846	FS2-275E-06-06-E-00	CYK610831	130354588	130354132
131338071	FS2-275E-06-06-E-00	CAB610821	130360404	130360407
131338072	FS2-275E-06-06-E-00	CAB610821	130360404	130360407
131338073	FS2-275E-06-06-E-00	CAB610821	130360404	130360407
131338074	FS2-275E-06-06-E-00	CAB610821	130360404	130360407
131338075	FS2-275E-06-06-E-00	CAB610821	130360404	130360407
131338076	FS2-275E-06-06-E-00	CAB610821	130360404	130360407
131338078	FS2-275E-06-06-E-00	CAB610821	130360387	130360394
131338079	FS2-275E-06-06-E-00	CAB610821	130360387	130360394
131338080	FS2-275E-06-06-E-00	CAB610821	130360387	130360394
131338081	FS2-275E-06-06-E-00	CAB610821	130360387	130360394
131338082	FS2-275E-06-06-E-00	CAB610821	130360387	130360394
131338083	FS2-275E-06-06-E-00	CAB610821	130360387	130360394
131338084	FS2-275E-06-06-E-00	CAB610821	130360385	130360392
131338085	FS2-275E-06-06-E-00	CAB610821	130360385	130360392
131338086	FS2-275E-06-06-E-00	CAB610821	130360385	130360392
131338087	FS2-275E-06-06-E-00	CAB610821	130360385	130360392
131338088	FS2-275E-06-06-E-00	CAB610821	130360385	130360392
131338089	FS2-275E-06-06-E-00	CAB610821	130360385	130360392

Roll_No	*Product*	*Resin Lot*	*Top Geo*	*Bottom Geo*
131338090	FS2-275E-06-06-E-00	CAB610821	130360385	130360392
131338091	FS2-275E-06-06-E-00	CAB610821	130360401	130360403
131338092	FS2-275E-06-06-E-00	CAB610821	130360401	130360403
131338093	FS2-275E-06-06-E-00	CAB610821	130360401	130360403
131338094	FS2-275E-06-06-E-00	CAB610821	130360401	130360403
131338095	FS2-275E-06-06-E-00	CAB610821	130360401	130360403
131338096	FS2-275E-06-06-E-00	CAB610821	130360401	130360403
131338097	FS2-275E-06-06-E-00	CAB610821	130360401	130360403
131338098	FS2-275E-06-06-E-00	CAB610821	130360383	130360380
131338099	FS2-275E-06-06-E-00	CAB610821	130360383	130360380
131338100	FS2-275E-06-06-E-00	CAB610821	130360383	130360380
131338101	FS2-275E-06-06-E-00	CAB610821	130360383	130360380
131338102	FS2-275E-06-06-E-00	CAB610821	130360383	130360380
131338103	FS2-275E-06-06-E-00	CAB610821	130360383	130360380
131338104	FS2-275E-06-06-E-00	CAB610821	130360383	130360380
131338105	FS2-275E-06-06-E-00	CAB610821	130360378	130360388
131338106	FS2-275E-06-06-E-00	CAB610821	130360378	130360388
131338107	FS2-275E-06-06-E-00	CAB610821	130360378	130360388
131338108	FS2-275E-06-06-E-00	CAB610821	130360378	130360388
131338109	FS2-275E-06-06-E-00	CAB610821	130360378	130360388
131338110	FS2-275E-06-06-E-00	CAB610821	130360378	130360388
131338111	FS2-275E-06-06-E-00	CAB610821	130360378	130360388
131338112	FS2-275E-06-06-E-00	CAB610821	130360379	130360390
131338113	FS2-275E-06-06-E-00	CAB610821	130360379	130360390
131338114	FS2-275E-06-06-E-00	CAB610821	130360379	130360390
131338115	FS2-275E-06-06-E-00	CAB610821	130360379	130360390
131338116	FS2-275E-06-06-E-00	CAB610821	130360379	130360390
131338117	FS2-275E-06-06-E-00	CAB610821	130360379	130360390
131338118	FS2-275E-06-06-E-00	CAB610821	130360379	130360393
131338119	FS2-275E-06-06-E-00	CAB610821	130360395	130360393
131338120	FS2-275E-06-06-E-00	CAB610821	130360395	130360393
131338121	FS2-275E-06-06-E-00	CAB610821	130360395	130360393
131338126	FS2-275E-06-06-E-00	CAB610821	130360395	130360393
131338127	FS2-275E-06-06-E-00	CAB610821	130360395	130360393
131338128	FS2-275E-06-06-E-00	CAB610821	130360395	130360393
131338129	FS2-275E-06-06-E-00	CAB610821	130360395	130360400
131338130	FS2-275E-06-06-E-00	CAB610821	130360395	130360400
131338131	FS2-275E-06-06-E-00	CAB610821	130360397	130360400
131338132	FS2-275E-06-06-E-00	CAB610821	130360397	130360400
131338133	FS2-275E-06-06-E-00	CAB610821	130360397	130360400
131338134	FS2-275E-06-06-E-00	CAB610821	130360397	130360400

Roll_No	*Product*	*Resin Lot*	*Top Geo*	*Bottom Geo*
131338135	FS2-275E-06-06-E-00	CAB610821	130360397	130360400
131338136	FS2-275E-06-06-E-00	CAB610821	130360397	130360389
131338137	FS2-275E-06-06-E-00	CAB610821	130360405	130360389
131338138	FS2-275E-06-06-E-00	CAB610821	130360405	130360389
131338139	FS2-275E-06-06-E-00	CAB610821	130360405	130360389
131338140	FS2-275E-06-06-E-00	CAB610821	130360405	130360389
131338141	FS2-275E-06-06-E-00	CAB610821	130360405	130360389
131338142	FS2-275E-06-06-E-00	CAB610821	130360405	130360389
131338143	FS2-275E-06-06-E-00	CAB610821	130360369	130360374
131338144	FS2-275E-06-06-E-00	CAB610821	130360369	130360374
131338145	FS2-275E-06-06-E-00	CAB610821	130360369	130360374
131338146	FS2-275E-06-06-E-00	CAB610821	130360369	130360374
131338147	FS2-275E-06-06-E-00	CAB610821	130360369	130360374
131338148	FS2-275E-06-06-E-00	CAB610821	130360369	130360374
131338149	FS2-275E-06-06-E-00	CAB610821	130360369	130360374
131338150	FS2-275E-06-06-E-00	CAB610821	130360370	130360402
131338151	FS2-275E-06-06-E-00	CAB610821	130360370	130360402
131338152	FS2-275E-06-06-E-00	CAB610821	130360370	130360402
131338153	FS2-275E-06-06-E-00	CAB610821	130360370	130360402
131338154	FS2-275E-06-06-E-00	CAB610821	130360370	130360402
131338155	FS2-275E-06-06-E-00	CAB610821	130360370	130360402
131338156	FS2-275E-06-06-E-00	CAB610821	130360371	130360402
131338157	FS2-275E-06-06-E-00	CAB610821	130360371	130360377
131338158	FS2-275E-06-06-E-00	CAB610821	130360371	130360377
131338159	FS2-275E-06-06-E-00	CAB610821	130360371	130360377
131338160	FS2-275E-06-06-E-00	CAB610821	130360371	130360377
131338161	FS2-275E-06-06-E-00	CAB610821	130360371	130360377
131338162	FS2-275E-06-06-E-00	CAB610821	130360371	130360377
131338163	FS2-275E-06-06-E-00	CAB610821	130360398	130360377
131338164	FS2-275E-06-06-E-00	CAB610821	130360398	130360382
131338165	FS2-275E-06-06-E-00	CAB610821	130360398	130360382
131338166	FS2-275E-06-06-E-00	CAB610821	130360398	130360382
131338191	FS2-275E-06-06-E-00	CAB610822	130360381	130360396

GSE

...aning Technology, Inc

R... Test Data Report

Sales Order No.	*Project Number*	*Customer Name*	*Project Location*	*Product Name*	*Report Date*
62244		Hallaton, Inc.	Smithfield, NC	FS2-275E-06-06-E-00	9/15/2010

GSE QC APPROVED

	ASTM D 5199	*ASTM D 7179 / D 5035*	*ASTM D 4218 / D 1603**	*ASTM D 1505 / D 792*	*GRI GC7* / ASTM D7005*			
	Average Thickness (mils)	*Geonet Tensile Strength (ppi)*	*Carbon Black Content (%)*	*Density (g/cc)*	*Peel Strength Side A - Minimum (ppi)*	*Peel Strength Side B - Minimum (ppi)*	*Peel Strength Side A - Average (ppi)*	*Peel Strength Side B - Average (ppi)*
Roll No.	*every 10th*	*every 10th*	*every 10th*	*every 10th*	*every 10th*			
131312213	283	108	2.5	0.960	1.98	3.05	2.42	3.70
131312214	283	108	2.5	0.960	1.89	0.98	2.23	1.31
131312215	282	106	2.4	0.959	5.56	2.87	6.59	3.59
131313575	284	110	2.3	0.959	2.96	3.76	3.41	4.29
131313576	284	110	2.3	0.959	2.96	3.76	3.41	4.29
131313577	284	110	2.3	0.959	2.96	3.76	3.41	4.29
131313580	284	110	2.3	0.959	2.96	3.76	3.41	4.29
131313581	284	110	2.3	0.959	2.96	3.76	3.41	4.29
131313582	284	110	2.3	0.959	2.96	3.76	3.41	4.29
131313583	279	112	2.6	0.958	2.18	2.28	2.58	2.56
131313594	282	105	2.4	0.959	1.52	2.32	1.78	2.66
131313595	282	105	2.4	0.959	1.52	2.32	1.78	2.66
131331843	279	92	2.5	0.959	2.58	1.68	2.93	2.08
131331844	279	92	2.5	0.959	2.58	1.68	2.93	2.08
131331845	279	92	2.5	0.959	2.58	1.68	2.93	2.08
131331846	279	92	2.5	0.959	2.58	1.68	2.93	2.08
131338071	295	96	2.4	0.963	2.01	2.29	2.29	2.54
131338072	278	92	2.3	0.963	2.60	2.20	2.98	2.59
131338073	278	92	2.3	0.963	2.60	2.20	2.98	2.59
131338074	278	92	2.3	0.963	2.60	2.20	2.98	2.59
131338075	278	92	2.3	0.963	2.60	2.20	2.98	2.59
131338076	278	92	2.3	0.963	2.60	2.20	2.98	2.59
131338078	278	92	2.3	0.963	2.60	2.20	2.98	2.59
131338079	278	92	2.3	0.963	2.60	2.20	2.98	2.59
131338080	278	92	2.3	0.963	2.60	2.20	2.98	2.59
131338081	278	92	2.3	0.963	2.60	2.20	2.98	2.59
131338082	278	92	2.3	0.963	2.60	2.20	2.98	2.59
131338083	278	92	2.3	0.963	2.60	2.20	2.98	2.59
131338084	278	92	2.3	0.963	2.60	2.20	2.98	2.59
131338085	278	92	2.3	0.963	2.60	2.20	2.98	2.59
131338086	278	92	2.3	0.963	2.60	2.20	2.98	2.59
131338087	279	90	2.6	0.964	1.99	2.12	2.32	2.44
131338088	279	90	2.6	0.964	1.99	2.12	2.32	2.44
131338089	279	90	2.6	0.964	1.99	2.12	2.32	2.44
131338090	279	90	2.6	0.964	1.99	2.12	2.32	2.44
131338091	279	90	2.6	0.964	1.99	2.12	2.32	2.44
131338092	279	90	2.6	0.964	1.99	2.12	2.32	2.44
131338093	279	90	2.6	0.964	1.99	2.12	2.32	2.44
131338094	279	90	2.6	0.964	1.99	2.12	2.32	2.44

GSE

Lining Technology, Inc

Roll Test Data Report

Sales Order No.	*Project Number*	*Customer Name*	*Project Location*	*Product Name*	*Report Date*
62244		Hallaton, Inc.	Smithfield, NC	FS2-275E-06-06-E-00	9/15/2010

GSE QC APPROVED

	ASTM D 5199	*ASTM D 7179 / D 5035*	*ASTM D 4218 / D 1603**	*ASTM D 1505 / D 792*	*GRI GC7* / ASTM D7005*			
	Average Thickness (mils)	*Geonet Tensile Strength (ppi)*	*Carbon Black Content (%)*	*Density (g/cc)*	*Peel Strength Side A - Minimum (ppi)*	*Peel Strength Side B - Minimum (ppi)*	*Peel Strength Side A - Average (ppi)*	*Peel Strength Side B - Average (ppi)*
Roll No.	*every 10th*	*every 10th*	*every 10th*	*every 10th*	*every 10th*			
131338095	279	90	2.6	0.964	1.99	2.12	2.32	2.44
131338096	279	90	2.6	0.964	1.99	2.12	2.32	2.44
131338097	279	90	2.6	0.964	1.99	2.12	2.32	2.44
131338098	279	90	2.6	0.964	1.99	2.12	2.32	2.44
131338099	279	90	2.6	0.964	1.99	2.12	2.32	2.44
131338100	279	90	2.6	0.964	1.99	2.12	2.32	2.44
131338101	279	90	2.6	0.964	1.99	2.12	2.32	2.44
131338102	282	91	2.3	0.964	2.34	1.33	2.65	1.56
131338103	282	91	2.3	0.964	2.34	1.33	2.65	1.56
131338104	282	91	2.3	0.964	2.34	1.33	2.65	1.56
131338105	282	91	2.3	0.964	2.34	1.33	2.65	1.56
131338106	282	91	2.3	0.964	2.34	1.33	2.65	1.56
131338107	282	91	2.3	0.964	2.34	1.33	2.65	1.56
131338108	282	91	2.3	0.964	2.34	1.33	2.65	1.56
131338109	282	91	2.3	0.964	2.34	1.33	2.65	1.56
131338110	282	91	2.3	0.964	2.34	1.33	2.65	1.56
131338111	282	91	2.3	0.964	2.34	1.33	2.65	1.56
131338112	282	91	2.3	0.964	2.34	1.33	2.65	1.56
131338113	282	91	2.3	0.964	2.34	1.33	2.65	1.56
131338114	282	91	2.3	0.964	2.34	1.33	2.65	1.56
131338115	282	91	2.3	0.964	2.34	1.33	2.65	1.56
131338116	282	91	2.3	0.964	2.34	1.33	2.65	1.56
131338117	290	95	2.8	0.964	2.96	3.24	3.16	3.88
131338118	290	95	2.8	0.964	2.96	3.24	3.16	3.88
131338119	290	95	2.8	0.964	2.96	3.24	3.16	3.88
131338120	290	95	2.8	0.964	2.96	3.24	3.16	3.88
131338121	290	95	2.8	0.964	2.96	3.24	3.16	3.88
131338126	285	88	2.6	0.964	2.96	3.24	3.16	3.88
131338127	286	82	2.3	0.963	2.31	2.47	2.56	2.89
131338128	286	82	2.3	0.963	2.31	2.47	2.56	2.89
131338129	286	82	2.3	0.963	2.31	2.47	2.56	2.89
131338130	286	82	2.3	0.963	2.31	2.47	2.56	2.89
131338131	286	82	2.3	0.963	2.31	2.47	2.56	2.89
131338132	286	82	2.3	0.963	2.31	2.47	2.56	2.89
131338133	286	82	2.3	0.963	2.31	2.47	2.56	2.89
131338134	286	82	2.3	0.963	2.31	2.47	2.56	2.89
131338135	286	82	2.3	0.963	2.31	2.47	2.56	2.89
131338136	286	82	2.3	0.963	2.31	2.47	2.56	2.89
131338137	286	82	2.3	0.963	2.31	2.47	2.56	2.89

GSE

_ining Technology, Inc

Rc Test Data Report

Sales Order No.	Project Number	Customer Name	Project Location	Product Name	Report Date
62244		Hallaton, Inc.	Smithfield, NC	FS2-275E-06-06-E-00	9/15/2010

GSE QC APPROVED

Roll No.	ASTM D 5199 Average Thickness (mils) every 10th	ASTM D 7179 / D 5035 Geonet Tensile Strength (ppi) every 10th	ASTM D 4218 / D 1603* Carbon Black Content (%) every 10th	ASTM D 1505 / D 792 Density (g cc) every 10th	GRI GC7* / ASTM D7005 Peel Strength Side A - Minimum (ppi) every 10th	Peel Strength Side B - Minimum (ppi)	Peel Strength Side A - Average (ppi)	Peel Strength Side B - Average (ppi)
131338138	286	82	2.3	0.963	2.31	2.47	2.56	2.89
131338139	286	82	2.3	0.963	2.31	2.47	2.56	2.89
131338140	286	82	2.3	0.963	2.31	2.47	2.56	2.89
131338141	286	82	2.3	0.963	2.31	2.47	2.56	2.89
131338142	282	98	2.3	0.963	3.79	2.88	4.15	3.30
131338143	282	98	2.3	0.963	3.79	2.88	4.15	3.30
131338144	282	98	2.3	0.963	3.79	2.88	4.15	3.30
131338145	282	98	2.3	0.963	3.79	2.88	4.15	3.30
131338146	282	98	2.3	0.963	3.79	2.88	4.15	3.30
131338147	282	98	2.3	0.963	3.79	2.88	4.15	3.30
131338148	282	98	2.3	0.963	3.79	2.88	4.15	3.30
131338149	282	98	2.3	0.963	3.79	2.88	4.15	3.30
131338150	282	98	2.3	0.963	3.79	2.88	4.15	3.30
131338151	282	98	2.3	0.963	3.79	2.88	4.15	3.30
131338152	282	98	2.3	0.963	3.79	2.88	4.15	3.30
131338153	282	98	2.3	0.963	3.79	2.88	4.15	3.30
131338154	282	98	2.3	0.963	3.79	2.88	4.15	3.30
131338155	282	98	2.3	0.963	3.79	2.88	4.15	3.30
131338156	282	98	2.3	0.963	3.79	2.88	4.15	3.30
131338157	283	97	2.2	0.963	2.61	3.16	2.92	3.64
131338158	283	97	2.2	0.963	2.61	3.16	2.92	3.64
131338159	283	97	2.2	0.963	2.61	3.16	2.92	3.64
131338160	283	97	2.2	0.963	2.61	3.16	2.92	3.64
131338161	283	97	2.2	0.963	2.61	3.16	2.92	3.64
131338162	283	97	2.2	0.963	2.61	3.16	2.92	3.64
131338163	283	97	2.2	0.963	2.61	3.16	2.92	3.64
131338164	283	97	2.2	0.963	2.61	3.16	2.92	3.64
131338165	283	97	2.2	0.963	2.61	3.16	2.92	3.64
131338166	283	97	2.2	0.963	2.61	3.16	2.92	3.64
131338191	279	84	2.2	0.963	3.06	1.98	3.34	2.30

Laboratory Manager: Jane Allen

GSE-8.2.4-029 Rev 01 02/10

This test report shall not be reproduced, except in full, without written approval of the laboratory.

Kingstree Lab - US

GSE Lining Technology, Inc.

Transmissivity Report
ASTM D4716

Roll No. 131338141

ROLL IDENTIFICATION		CUSTOMER INFORMATION	
Roll Number	131338141	Order Number	62244
Product Name	FS2-275E-06-06-E-00	Customer Name	Hallaton, Inc.
Production Date	3/26/2010	Project Name	Johnston County Area 1 Closure
Resin Lot #	CAB610821	Location	Smithfield, NC

Pressure (psf)	Gradient	Net/Composite	Transmissivity Results (m^2/sec)	Transmissivity Results (gal/min/ft)	Seat Time (min)	Boundary
1000	0.25	Composite	1.69E-03	8.14	1440	Sand/Geocomposite/Geomembrane

Chevron Phillips Chemical Company LP

CoA Date: 06/23/2009

Certificate of Analysis

Shipped To: GSE NONWOVEN TECHNOLOGY CO
1245 EASTLAND AVE
KINGSTREE SC 29556
USA

Recipient: Phouangsavanh
Fax:

CPC Delivery #: 87877480
PO #: 46824
Weight: 205200 LB
Ship Date: 06/23/2009
Package: BULK
Mode: Hopper Car
Car #: HCBX001515
Seal No: 489240

Product:
Marlex HHM 5502BN HDPE

Lot Number: CYF610972

Property	Test Method	Value	Unit
Melt Index	ASTM D1238	0.35	g/10mi
ensity	ASTM D1505 or D4883	0.9545	g/cm3

The data set forth herein have been carefully compiled by Chevron Phillips Chemical Company LP.
However, there is no warranty of any kind, either expressed or implied, applicable to its use, and the user assumes all risk and liability in connection therewith.

Kevin Ayres
Quality Control Supervisor

For CoA questions contact Customer Service Representative at +1-832-813-4637

Chevron Phillips Chemical Company LP

CoA Date: 07/03/2009

Certificate of Analysis

Shipped To: GSE NONWOVEN TECHNOLOGY CO
1245 EASTLAND AVE
KINGSTREE SC 29556
USA

Recipient: PHOUANGSAVANH
Fax:

CPC Delivery #: 87883612
PO #: 46824
Weight: 203400 LB
Ship Date: 07/03/2009
Package: BULK
Mode: Hopper Car
Car #: HLTX006188
Seal No: 492417

Product:
Marlex HHM 5502BN HDPE

Lot Number: CYG610060

Property	Test Method	Value	Unit
Melt Index	ASTM D1238	0.35	g/10mi
Density	D1505 or D4883	0.9545	g/cm3

The data set forth herein have been carefully compiled by Chevron Phillips Chemical Company LP.
However, there is no warranty of any kind, either expressed or implied, applicable to its use, and the user assumes all risk and liability in connection therewith.

Kevin Ayres
Quality Control Supervisor

For CoA questions contact Customer Service Representative at +1-832-813-4637

Chevron Phillips Chemical Company LP

CoA Date: 10/24/2009

Certificate of Analysis

Shipped To: GSE NONWOVEN TECHNOLOGY CO 1245 EASTLAND AVE KINGSTREE SC 29556 USA	CPC Delivery #: 87944818 PO #: 43824 Weight: 207250 LB Ship Date: 10/24/2009 Package: BULK
Recipient: PHOUANGSAVANH Fax:	Mode: Hopper Car Car #: HLTX006124 Seal No: 493140

Product:
Marlex HHM 5502BN HDPE

Lot Number: CYK610831

Property	Test Method	Value	Unit
Melt Index	ASTM D1238	0.36	g/10mi
ensity	D1505 or D4883	0.9540	g/cm3

The data set forth herein have been carefully compiled by Chevron Phillips Chemical Company LP.
However, there is no warranty of any kind, either expressed or implied, applicable to its use, and the user assumes all risk and liability in connection therewith.

Kevin Ayres
Quality Control Supervisor

For CoA questions contact Ricky Parks at +1-832-813-4244

CoA Date: 02/19/2010

Certificate of Analysis

Shipped To: GSE NONWOVEN TECHNOLOGY CO
1245 EASTLAND AVE
KINGSTREE SC 29556
USA

Recipient: WILLIAMS
Fax:

CPC Delivery #: 88007712
PO #: 03-061558
Weight: 203450 LB
Ship Date: 02/19/2010
Package: BULK
Mode: Hopper Car
Car #: HLTX007225
Seal No: 498914

Product:
Marlex HHM 5502BN HDPE

Lot Number: CAB610821

Property	Test Method	Value	Unit
Melt Index	ASTM D1238	0.34	g/10mi
Density	D1505 or D4883	0.9545	g/cm3

The data set forth herein have been carefully compiled by Chevron Phillips Chemical Company LP. **However, there is no warranty of any kind, either expressed or implied, applicable to its use, and the user assumes all risk and liability in connection therewith.**

Kevin Ayres
Quality Control Supervisor

For CoA questions contact Customer Service Representative at 800-231-1212

CoA Date: 02/19/2010

Certificate of Analysis

Shipped To: GSE NONWOVEN TECHNOLOGY CO
1245 EASTLAND AVE
KINGSTREE SC 29556
USA

Recipient: WILLIAMS
Fax:

CPC Delivery #: 88007713
PO #: 03-061558
Weight: 209050 LB
Ship Date: 02/19/2010
Package: BULK
Mode: Hopper Car
Car #: HLTX006248
Seal No: 498920

Product:
Marlex HHM 5502BN HDPE

Lot Number: CAB610822

Property	Test Method	Value	Unit
lelt Index	ASTM D1238	0.34	g/10mi
Density	D1505 or D4883	0.9545	g/cm3

The data set forth herein have been carefully compiled by Chevron Phillips Chemical Company LP.
However, there is no warranty of any kind, either expressed or implied, applicable to its use, and the user assumes all risk and liability in connection therewith.

Kevin Ayres
Quality Control Supervisor

For CoA questions contact Customer Service Representative at 800-231-1212

GSE Lining Technology, Inc

Roll Test Data Report

Sales Order No.	Project Number	Customer Name	Project Location	Product Name	Report Date
62244		Hallaton, Inc.	Smithfield, NC	FBR-060E-EBC-E-00	9/15/2010

GSE QC APPROVED

	ASTM D 4491		ASTM D 4751	ASTM D 4833	ASTM D 4533		ASTM D 4632				ASTM D 5261
	Average Sample Flow Rate	Permittivity	Apparent Opening Size	Puncture Resistance	Trap Tear Strength CD	Trap Tear Strength MD	Grab Elongation CD	Grab Elongation MD	Grab Strength CD	Grab Strength MD	Mass per Unit Area
	(gallon min./ft2)	(Sec-1)	(mm)	(lbs)	(lbs)	(lbs)	(%)	(%)	(lbs)	(lbs)	(oz. yd2)
Roll No.	every 24th		every 24th	every 4th	every 4th				every 4th		every 4th
130347831	143	2.00	0.150	116	146	126	108	83	195	218	7.0
130347836	143	2.00	0.150	104	130	109	119	78	176	193	6.1
130347837	143	2.00	0.150	104	130	109	119	78	176	193	6.1
130347838	143	2.00	0.150	101	99	117	113	77	194	194	6.2
130349175	143	1.90	0.150	92	75	87	136	113	176	161	6.2
130349176	143	1.90	0.150	92	75	87	136	113	176	161	6.2
130349177	143	1.90	0.150	92	75	87	136	113	176	161	6.2
130349178	143	1.90	0.150	92	75	87	136	113	176	161	6.2
130349185	118	1.60	0.150	95	96	91	137	99	206	182	6.7
130349186	118	1.60	0.150	95	96	91	137	99	206	182	6.7
130354132	156	2.10	0.212	108	99	101	145	84	197	195	6.4
130354588	155	2.10	0.212	100	96	91	157	89	171	214	6.5
130360369	132	1.80	0.212	97	178	124	142	108	218	192	6.2
130360370	132	1.80	0.212	97	178	124	142	108	218	192	6.2
130360371	132	1.80	0.212	97	178	124	142	108	218	192	6.2
130360374	129	1.70	0.212	101	122	88	134	103	215	188	6.6
130360377	117	1.60	0.212	104	129	94	124	106	218	187	6.3
130360378	117	1.60	0.212	104	129	94	124	106	218	187	6.3
130360379	117	1.60	0.212	104	129	94	124	106	218	187	6.3
130360380	117	1.60	0.212	104	129	94	124	106	218	187	6.3
130360381	140	1.90	0.212	111	146	97	134	102	230	188	6.6
130360382	140	1.90	0.212	111	146	97	134	102	230	188	6.6
130360383	140	1.90	0.212	111	146	97	134	102	230	188	6.6
130360385	142	1.90	0.212	108	136	94	130	111	232	179	6.6
130360387	142	1.90	0.212	108	136	94	130	111	232	179	6.6
130360388	142	1.90	0.212	108	136	94	130	111	232	179	6.6
130360389	143	2.00	0.212	112	183	127	135	111	243	199	6.8
130360390	143	2.00	0.212	112	183	127	135	111	243	199	6.8
130360392	143	2.00	0.212	112	183	127	135	111	243	199	6.8
130360393	157	2.10	0.212	100	164	104	140	111	202	184	6.5

GSE Lining Technology, Inc

Roll Test Data Report

Sales Order No.	Project Number	Customer Name	Project Location	Product Name	Report Date
62244		Hallaton, Inc.	Smithfield, NC	FBR-060E-EBC-E-00	9/15/2010

GSE QC APPROVED

	ASTM D 4491		ASTM D 4751	ASTM D 4833	ASTM D 4533		ASTM D 4632				ASTM D 5261
	Average Sample Flow Rate	Permittivity	Apparent Opening Size	Puncture Resistance	Trap Tear Strength CD	Trap Tear Strength MD	Grab Elongation CD	Grab Elongation MD	Grab Strength CD	Grab Strength MD	Mass per Unit Area
	(gallon min ft2)	(Sec-1)	(mm)	(lbs)	(lbs)	(lbs)	(%)	(%)	(lbs)	(lbs)	(oz. yd2)
Roll No.	every 24th		every 24th	every 4th	every 4th				every 4th		every 4th
130360394	157	2.10	0.212	100	164	104	140	111	202	184	6.5
130360395	157	2.10	0.212	100	164	104	140	111	202	184	6.5
130360397	143	1.90	0.212	96	185	105	138	105	225	186	6.6
130360398	143	1.90	0.212	96	185	105	138	105	225	186	6.6
130360400	143	1.90	0.212	96	185	105	138	105	225	186	6.6
130360401	127	1.70	0.212	104	114	92	128	107	234	184	6.6
130360402	127	1.70	0.212	104	114	92	128	107	234	184	6.6
130360403	127	1.70	0.212	104	114	92	128	107	234	184	6.6
130360404	127	1.70	0.212	104	114	92	128	107	234	184	6.6
130360405	134	1.80	0.212	95	128	100	133	99	214	190	6.7
130360407	134	1.80	0.212	95	128	100	133	99	214	190	6.7

Laboratory Manager: Jane Allen

GSE-8.2.4-029 Rev 01 02/10

This test report shall not be reproduced, except in full, without written approval of the laboratory.

Kingstree Lab - US

GSE Roll Allocation

Order SO-062244
Customer Hallaton, Inc.
Project Name Johnston County Landfill

Roll#	Resin Lot	Product Code	Mfg Date	Length
131350881	CB20072203	FS2-275E-06-06-E-00	9/18/2010	212
131350882	CB20072203	FS2-275E-06-06-E-00	9/18/2010	212
131350883	CB20072203	FS2-275E-06-06-E-00	9/18/2010	212
131350884	CB20072203	FS2-275E-06-06-E-00	9/18/2010	212
131350885	CB20072203	FS2-275E-06-06-E-00	9/18/2010	212
131350886	CB20072203	FS2-275E-06-06-E-00	9/18/2010	212
131350887	CB20072203	FS2-275E-06-06-E-00	9/18/2010	212
131350888	CB20072203	FS2-275E-06-06-E-00	9/18/2010	212
131350889	CB20072203	FS2-275E-06-06-E-00	9/18/2010	212
131350890	CB20072203	FS2-275E-06-06-E-00	9/18/2010	212
131350891	CB20072203	FS2-275E-06-06-E-00	9/18/2010	212
131350892	CB20072203	FS2-275E-06-06-E-00	9/18/2010	212
131350893	CB20072203	FS2-275E-06-06-E-00	9/18/2010	212
131350894	CB20072203	FS2-275E-06-06-E-00	9/18/2010	212
131350895	CB20072203	FS2-275E-06-06-E-00	9/18/2010	212
131350896	CB20072203	FS2-275E-06-06-E-00	9/18/2010	212
131350897	CB20072203	FS2-275E-06-06-E-00	9/18/2010	212
131350898	CB20072203	FS2-275E-06-06-E-00	9/18/2010	212
131350899	CB20072203	FS2-275E-06-06-E-00	9/18/2010	212
131350900	CB20072203	FS2-275E-06-06-E-00	9/18/2010	212
131350901	CB20072203	FS2-275E-06-06-E-00	9/18/2010	212
131350902	CB20072203	FS2-275E-06-06-E-00	9/18/2010	212
131350903	CB20072203	FS2-275E-06-06-E-00	9/18/2010	212
131350904	CB20072203	FS2-275E-06-06-E-00	9/18/2010	212
131350905	CB20072203	FS2-275E-06-06-E-00	9/18/2010	212
131350906	CB20072203	FS2-275E-06-06-E-00	9/18/2010	212
131350907	CB20072203	FS2-275E-06-06-E-00	9/18/2010	212
131350908	CB20072203	FS2-275E-06-06-E-00	9/18/2010	212
131350909	CB20072203	FS2-275E-06-06-E-00	9/18/2010	212
131350910	CB20072203	FS2-275E-06-06-E-00	9/18/2010	212
131350911	CB20072203	FS2-275E-06-06-E-00	9/18/2010	212
131350912	CB20072203	FS2-275E-06-06-E-00	9/18/2010	212
131350913	CB20072203	FS2-275E-06-06-E-00	9/18/2010	212
131350914	CB20072203	FS2-275E-06-06-E-00	9/18/2010	212
131350915	CB20072203	FS2-275E-06-06-E-00	9/18/2010	212
131350916	CB20072203	FS2-275E-06-06-E-00	9/18/2010	212
131350917	CB20072203	FS2-275E-06-06-E-00	9/18/2010	212
131350918	CB20072203	FS2-275E-06-06-E-00	9/18/2010	212
131350919	CB20072203	FS2-275E-06-06-E-00	9/18/2010	212
131350920	CB20072203	FS2-275E-06-06-E-00	9/18/2010	212
131350921	CB20072203	FS2-275E-06-06-E-00	9/18/2010	212
131350922	CB20072203	FS2-275E-06-06-E-00	9/18/2010	212
131350923	CB20072203	FS2-275E-06-06-E-00	9/18/2010	212
131350924	CB20072203	FS2-275E-06-06-E-00	9/18/2010	212
131350925	CB20072203	FS2-275E-06-06-E-00	9/18/2010	212
131350926	CB20072203	FS2-275E-06-06-E-00	9/18/2010	212
131350927	CB20072203	FS2-275E-06-06-E-00	9/18/2010	212
131350928	CB20072203	FS2-275E-06-06-E-00	9/18/2010	212
131350929	CB20072203	FS2-275E-06-06-E-00	9/18/2010	212

131350930	CB20072203	FS2-275E-06-06-E-00	9/18/2010	212
131350931	CB20072203	FS2-275E-06-06-E-00	9/18/2010	212
131350932	CB20072203	FS2-275E-06-06-E-00	9/18/2010	212
131350933	CB20072203	FS2-275E-06-06-E-00	9/18/2010	212
131350934	CB20072203	FS2-275E-06-06-E-00	9/18/2010	212
131350935	CB20072203	FS2-275E-06-06-E-00	9/18/2010	212
131350936	CB20072203	FS2-275E-06-06-E-00	9/19/2010	212
131350937	CB20072203	FS2-275E-06-06-E-00	9/19/2010	212
131350938	CB20072203	FS2-275E-06-06-E-00	9/19/2010	212
131350939	CB20072203	FS2-275E-06-06-E-00	9/19/2010	212
131350940	CB20072203	FS2-275E-06-06-E-00	9/19/2010	212
131350941	CB20072203	FS2-275E-06-06-E-00	9/19/2010	212
131350942	CB20072203	FS2-275E-06-06-E-00	9/19/2010	212
131350943	CB20072203	FS2-275E-06-06-E-00	9/19/2010	212
131350944	CB20072203	FS2-275E-06-06-E-00	9/19/2010	212
131350945	CB20072203	FS2-275E-06-06-E-00	9/19/2010	212
131350946	CB20072203	FS2-275E-06-06-E-00	9/19/2010	212
131350947	CB20072203	FS2-275E-06-06-E-00	9/19/2010	212
131350948	CB20072203	FS2-275E-06-06-E-00	9/19/2010	212
131350949	CB20072203	FS2-275E-06-06-E-00	9/19/2010	212
131350950	CB20072203	FS2-275E-06-06-E-00	9/19/2010	212
131350951	CB20072203	FS2-275E-06-06-E-00	9/19/2010	212
131350952	CB20072203	FS2-275E-06-06-E-00	9/19/2010	212
131350953	CB20072203	FS2-275E-06-06-E-00	9/19/2010	212

Geocomposite Traceability

Order: SO-062244
Customer: Hallaton, Inc.
Project Name: Johnston County Landfill

Roll#	Product	Resin Lot	Top Geo	Bottom Geo
131350881	FS2-275E-06-06-E-00	CB20072203	130366307	130366318
131350882	FS2-275E-06-06-E-00	CB20072203	130366307	130366318
131350883	FS2-275E-06-06-E-00	CB20072203	130366307	130366318
131350884	FS2-275E-06-06-E-00	CB20072203	130366307	130366318
131350885	FS2-275E-06-06-E-00	CB20072203	130366307	130366318
131350886	FS2-275E-06-06-E-00	CB20072203	130366307	130366318
131350887	FS2-275E-06-06-E-00	CB20072203	130366307	130366318
131350888	FS2-275E-06-06-E-00	CB20072203	130366307	130366317
131350889	FS2-275E-06-06-E-00	CB20072203	130366309	130366317
131350890	FS2-275E-06-06-E-00	CB20072203	130366309	130366317
131350891	FS2-275E-06-06-E-00	CB20072203	130366309	130366317
131350892	FS2-275E-06-06-E-00	CB20072203	130366309	130366317
131350893	FS2-275E-06-06-E-00	CB20072203	130366309	130366317
131350894	FS2-275E-06-06-E-00	CB20072203	130366309	130366317
131350895	FS2-275E-06-06-E-00	CB20072203	130366309	130366316
131350896	FS2-275E-06-06-E-00	CB20072203	130366326	130366316
131350897	FS2-275E-06-06-E-00	CB20072203	130366326	130366316
131350898	FS2-275E-06-06-E-00	CB20072203	130366326	130366316
131350899	FS2-275E-06-06-E-00	CB20072203	130366326	130366316
131350900	FS2-275E-06-06-E-00	CB20072203	130366326	130366316
131350901	FS2-275E-06-06-E-00	CB20072203	130366310	130366316
131350902	FS2-275E-06-06-E-00	CB20072203	130366310	130366308
131350903	FS2-275E-06-06-E-00	CB20072203	130366310	130366308
131350904	FS2-275E-06-06-E-00	CB20072203	130366310	130366308
131350905	FS2-275E-06-06-E-00	CB20072203	130366310	130366308
131350906	FS2-275E-06-06-E-00	CB20072203	130366310	130366308
131350907	FS2-275E-06-06-E-00	CB20072203	130366310	130366308
131350908	FS2-275E-06-06-E-00	CB20072203	130366310	130366308
131350909	FS2-275E-06-06-E-00	CB20072203	130366366	130366370
131350910	FS2-275E-06-06-E-00	CB20072203	130366366	130366370
131350911	FS2-275E-06-06-E-00	CB20072203	130366366	130366370
131350912	FS2-275E-06-06-E-00	CB20072203	130366366	130366370
131350913	FS2-275E-06-06-E-00	CB20072203	130366366	130366370
131350914	FS2-275E-06-06-E-00	CB20072203	130366366	130366370
131350915	FS2-275E-06-06-E-00	CB20072203	130366294	130366290
131350916	FS2-275E-06-06-E-00	CB20072203	130366294	130366290
131350917	FS2-275E-06-06-E-00	CB20072203	130366294	130366290
131350918	FS2-275E-06-06-E-00	CB20072203	130366294	130366290
131350919	FS2-275E-06-06-E-00	CB20072203	130366294	130366290
131350920	FS2-275E-06-06-E-00	CB20072203	130366294	130366290
131350921	FS2-275E-06-06-E-00	CB20072203	130366294	130366290
131350922	FS2-275E-06-06-E-00	CB20072203	130366294	130366290
131350923	FS2-275E-06-06-E-00	CB20072203	130366295	130366291
131350924	FS2-275E-06-06-E-00	CB20072203	130366295	130366291
131350925	FS2-275E-06-06-E-00	CB20072203	130366295	130366291
131350926	FS2-275E-06-06-E-00	CB20072203	130366295	130366291
131350927	FS2-275E-06-06-E-00	CB20072203	130366295	130366291
131350928	FS2-275E-06-06-E-00	CB20072203	130366295	130366291

131350929	FS2-275E-06-06-E-00	CB20072203	130366295	130366291
131350930	FS2-275E-06-06-E-00	CB20072203	130366362	130366376
131350931	FS2-275E-06-06-E-00	CB20072203	130366362	130366376
131350932	FS2-275E-06-06-E-00	CB20072203	130366362	130366376
131350933	FS2-275E-06-06-E-00	CB20072203	130366362	130366376
131350934	FS2-275E-06-06-E-00	CB20072203	130366362	130366376
131350935	FS2-275E-06-06-E-00	CB20072203	130366342	130366292
131350936	FS2-275E-06-06-E-00	CB20072203	130366342	130366292
131350937	FS2-275E-06-06-E-00	CB20072203	130366342	130366292
131350938	FS2-275E-06-06-E-00	CB20072203	130366342	130366292
131350939	FS2-275E-06-06-E-00	CB20072203	130366342	130366292
131350940	FS2-275E-06-06-E-00	CB20072203	130366342	130366292
131350941	FS2-275E-06-06-E-00	CB20072203	130366342	130366292
131350942	FS2-275E-06-06-E-00	CB20072203	130366296	130366292
131350943	FS2-275E-06-06-E-00	CB20072203	130366296	130366361
131350944	FS2-275E-06-06-E-00	CB20072203	130366296	130366361
131350945	FS2-275E-06-06-E-00	CB20072203	130366296	130366361
131350946	FS2-275E-06-06-E-00	CB20072203	130366296	130366361
131350947	FS2-275E-06-06-E-00	CB20072203	130366296	130366361
131350948	FS2-275E-06-06-E-00	CB20072203	130366296	130366361
131350949	FS2-275E-06-06-E-00	CB20072203	130366293	130366361
131350950	FS2-275E-06-06-E-00	CB20072203	130366293	130366375
131350951	FS2-275E-06-06-E-00	CB20072203	130366293	130366375
131350952	FS2-275E-06-06-E-00	CB20072203	130366293	130366375
131350953	FS2-275E-06-06-E-00	CB20072203	130366293	130366375

GSE Lining Technology, LLC

ROLL TEST DATA REPORT

GSE QC APPROVED

Report Date: 9/22/2010

Sales Order No.	Customer Name	Project Location	Product Name	BOL Number
SO-062244	Hallaton, Inc.	Smithfield, NC	FS2-275E-06-06-E-00	

Roll Number	ASTM D5199 Geonet Thickness (mils)	ASTM D7179 Tensile Strength (ppi)	Density ASTM D1505 (g/cc)	Carbon Black Content ASTM D4218 (%)	ASTM D7005 Ply Adhesion Average (ppi) Side A	ASTM D7005 Ply Adhesion Average (ppi) Side B	ASTM D7005 Ply Adhesion Minimum (ppi) Side A	ASTM D7005 Ply Adhesion Minimum (ppi) Side B
131350881	283	79	0.960	2.34	1.93	2.28	1.65	1.96
131350882	280	79	0.962	2.87	1.67	1.77	1.37	1.48
131350883	280	79	0.962	2.87	1.67	1.77	1.37	1.48
131350884	280	79	0.962	2.87	1.67	1.77	1.37	1.48
131350885	280	79	0.962	2.87	1.67	1.77	1.37	1.48
131350886	280	79	0.962	2.87	1.67	1.77	1.37	1.48
131350887	280	79	0.962	2.87	1.67	1.77	1.37	1.48
131350888	280	79	0.962	2.87	1.67	1.77	1.37	1.48
131350889	280	79	0.962	2.87	1.67	1.77	1.37	1.48
131350890	280	79	0.962	2.87	1.67	1.77	1.37	1.48
131350891	280	79	0.962	2.87	1.67	1.77	1.37	1.48
131350892	280	79	0.962	2.87	1.67	1.77	1.37	1.48
131350893	280	79	0.962	2.87	1.67	1.77	1.37	1.48
131350894	280	79	0.962	2.87	1.67	1.77	1.37	1.48
131350895	280	79	0.962	2.87	1.67	1.77	1.37	1.48
131350896	280	79	0.962	2.87	1.67	1.77	1.37	1.48
131350897	281	79	0.959	2.37	1.42	1.36	1.18	1.16
131350898	281	79	0.959	2.37	1.42	1.36	1.18	1.16
131350899	281	79	0.959	2.37	1.42	1.36	1.18	1.16
131350900	281	79	0.959	2.37	1.42	1.36	1.18	1.16
131350901	281	79	0.959	2.37	1.42	1.36	1.18	1.16
131350902	281	79	0.959	2.37	1.42	1.36	1.18	1.16
131350903	281	79	0.959	2.37	1.42	1.36	1.18	1.16
131350904	281	79	0.959	2.37	1.42	1.36	1.18	1.16
131350905	281	79	0.959	2.37	1.42	1.36	1.18	1.16
131350906	281	79	0.959	2.37	1.42	1.36	1.18	1.16
131350907	281	79	0.959	2.37	1.42	1.36	1.18	1.16
131350908	281	79	0.959	2.37	1.42	1.36	1.18	1.16
131350909	281	79	0.959	2.37	1.42	1.36	1.18	1.16
131350910	281	79	0.959	2.37	1.42	1.36	1.18	1.16
131350911	281	79	0.959	2.37	1.42	1.36	1.18	1.16
131350912	279	74	0.962	2.51	2.23	3.08	1.93	2.69
131350913	279	74	0.962	2.51	2.23	3.08	1.93	2.69
131350914	279	74	0.962	2.51	2.23	3.08	1.93	2.69

GSE Lining Technology, LLC

ROLL TEST DATA REPORT

GSE QC APPROVED

Report Date: 9/22/2010

Sales Order No.	*Customer Name*	*Project Location*	*Product Name*	*BOL Number*
SO-062244	Hallaton, Inc.	Smithfield, NC	FS2-275E-06-06-E-00	

Roll Number	ASTM D5199 Geonet Thickness (mils)	ASTM D7179 Tensile Strength (ppi)	Density ASTM D1505 (g/cc)	Carbon Black Content ASTM D4218 (%)	ASTM D7005 Ply Adhesion Average (ppi) Side A	ASTM D7005 Ply Adhesion Average (ppi) Side B	ASTM D7005 Ply Adhesion Minimum (ppi) Side A	ASTM D7005 Ply Adhesion Minimum (ppi) Side B
131350915	279	74	0.962	2.51	2.23	3.08	1.93	2.69
131350916	279	74	0.962	2.51	2.23	3.08	1.93	2.69
131350917	279	74	0.962	2.51	2.23	3.08	1.93	2.69
131350918	279	74	0.962	2.51	2.23	3.08	1.93	2.69
131350919	279	74	0.962	2.51	2.23	3.08	1.93	2.69
131350920	279	74	0.962	2.51	2.23	3.08	1.93	2.69
131350921	279	74	0.962	2.51	2.23	3.08	1.93	2.69
131350922	279	74	0.962	2.51	2.23	3.08	1.93	2.69
131350923	279	74	0.962	2.51	2.23	3.08	1.93	2.69
131350924	279	74	0.962	2.51	2.23	3.08	1.93	2.69
131350925	279	74	0.962	2.51	2.23	3.08	1.93	2.69
131350926	279	74	0.962	2.51	2.23	3.08	1.93	2.69
131350927	284	82	0.961	2.53	2.27	2.59	1.94	2.22
131350928	284	82	0.961	2.53	2.27	2.59	1.94	2.22
131350929	284	82	0.961	2.53	2.27	2.59	1.94	2.22
131350930	284	82	0.961	2.53	2.27	2.59	1.94	2.22
131350931	284	82	0.961	2.53	2.27	2.59	1.94	2.22
131350932	284	82	0.961	2.53	2.27	2.59	1.94	2.22
131350933	284	82	0.961	2.53	2.27	2.59	1.94	2.22
131350934	284	82	0.961	2.53	2.27	2.59	1.94	2.22
131350935	284	82	0.961	2.53	2.27	2.59	1.94	2.22
131350936	284	82	0.961	2.53	2.27	2.59	1.94	2.22
131350937	284	82	0.961	2.53	2.27	2.59	1.94	2.22
131350938	284	82	0.961	2.53	2.27	2.59	1.94	2.22
131350939	284	82	0.961	2.53	2.27	2.59	1.94	2.22
131350940	284	82	0.961	2.53	2.27	2.59	1.94	2.22
131350941	284	82	0.961	2.53	2.27	2.59	1.94	2.22
131350942	286	82	0.960	2.72	2.69	1.74	2.32	1.44
131350943	286	82	0.960	2.72	2.69	1.74	2.32	1.44
131350944	286	82	0.960	2.72	2.69	1.74	2.32	1.44
131350945	286	82	0.960	2.72	2.69	1.74	2.32	1.44
131350946	286	82	0.960	2.72	2.69	1.74	2.32	1.44
131350947	286	82	0.960	2.72	2.69	1.74	2.32	1.44
131350948	286	82	0.960	2.72	2.69	1.74	2.32	1.44

GSE Lining Technology, LLC

ROLL TEST DATA REPORT

GSE QC APPROVED

Report Date: **9/22/2010**

Sales Order No.	*Customer Name*	*Project Location*	*Product Name*	*BOL Number*
SO-062244	Hallaton, Inc.	Smithfield, NC	FS2-275E-06-06-E-00	

Roll Number	ASTM D5199 Geonet Thickness (mils)	ASTM D7179 Tensile Strength (ppi)	Density ASTM D1505 (g/cc)	Carbon Black Content ASTM D4218 (%)	ASTM D7005 Ply Adhesion Average (ppi) Side A	ASTM D7005 Ply Adhesion Average (ppi) Side B	ASTM D7005 Ply Adhesion Minimum (ppi) Side A	ASTM D7005 Ply Adhesion Minimum (ppi) Side B
131350949	286	82	0.960	2.72	2.69	1.74	2.32	1.44
131350950	286	82	0.960	2.72	2.69	1.74	2.32	1.44
131350951	286	82	0.960	2.72	2.69	1.74	2.32	1.44
131350952	286	82	0.960	2.72	2.69	1.74	2.32	1.44
131350953	286	82	0.960	2.72	2.69	1.74	2.32	1.44

Laboratory Manager Jane Allen

This test report shall not be reproduced, except in full, without written approval of the laboratory.

Equistar Chemicals, LP
One Houston Center
1221 McKinney
Houston TX 77010

Certificate Of Analysis

Certificate of Analysis Contact:
TRACY BRADFORD
GSE LINING TECHNOLOGY
HOUSTON TX 77073
Fax No. : 281-230-8630

Ship-To Address:
GSE LINING TECHNOLOGY INC
1245 EASTLAND AVENUE
KINGSTREE SC 29556
USA

Equistar Material	: 504295 PETROTHENE® LR732001	Customer Order No.	: 03-062904
Batch Number	: CB20072203	Customer Number	: 42584
Vehicle Number	: CEFX50269	Date Shipped	: July 23, 2010
Estimated Quantity	: 206,700 LBS	Equistar Order No.	: 1909753 000010
		Delivery Item No.	: 82336118 000010

Test Description	Test Result	Unit of Measure	
Vehicle ID	CEFX50269		
Vehicle Type	HOPPER CAR		
Density, Extrudate @ 23C	0.9530	g/cc	STM 011
Melt Index, 2160g @ 190C	0.31	g/10 min.	STM 002

Data reported was generated in an approved Quality Assurance Lab.

Print Date: July 23, 2010 BNLITTLE
This information is available 24 hours a day at
www.CustomerXPRESS.com
Questions ? Call Customer Service: 888-777-0232

This Certificate of Analysis contains the most current information available as of the print date.
This document shall not be reproduced except in full, without the written approval of the issuer.

GSE *Lining Technology, Inc*

Roll Test Data eport

Sales Order No.	*Project Number*	*Customer Name*	*Project Location*	*Product Name*	*Report Date*
62244		Hallaton, Inc.	Smithfield, NC	GEO-060E-EBC-E-00	9/22/2010

GSE QC APPROVED

Roll No.	*ASTM D5261 Mass per Unit Area (oz/sy)*	*ASTM D4632 Grab Strength (lbs) MD*	*ASTM D4632 Grab Strength (lbs) TD*	*ASTM D4632 Grab Elongation (%) MD*	*ASTM D4632 Grab Elongation (%) TD*	*ASTM D4533 Trapezoidal Tear (lbs) MD*	*ASTM D4533 Trapezoidal Tear (lbs) TD*	*Puncture Resistance ASTM D4833 (lbs)*	*ASTM D4491 Water Flow Rate (gpm/ft²)*	*ASTM D4491 Permittivity (sec-1)*	*ASTM D4751 AOS (mm)*
130366290	7.0	250	250	80	123	137	146	123	121	1.60	0.212
130366291	7.0	250	250	80	123	137	146	123	121	1.60	0.212
130366292	7.0	250	250	80	123	137	146	123	121	1.60	0.212
130366293	7.0	250	250	80	123	137	146	123	121	1.60	0.212
130366294	6.7	236	237	90	123	143	138	105	121	1.60	0.212
130366295	6.7	236	237	90	123	143	138	105	121	1.60	0.212
130366296	6.7	236	237	90	123	143	138	105	121	1.60	0.212
130366307	6.0	206	227	92	127	143	215	109	121	1.60	0.212
130366308	6.0	206	227	92	127	143	215	109	121	1.60	0.212
130366309	6.0	206	227	92	127	143	215	109	121	1.60	0.212
130366310	7.2	244	273	93	128	146	186	133	121	1.60	0.212
130366316	6.5	218	244	95	114	123	161	104	115	1.60	0.212
130366317	6.5	218	244	95	114	123	161	104	115	1.60	0.212
130366318	6.3	209	261	90	128	136	207	106	115	1.60	0.212
130366326	6.9	237	251	94	126	123	115	107	115	1.60	0.212
130366342	6.5	214	230	78	115	94	101	125	139	1.90	0.212
130366361	6.8	229	235	86	111	135	142	112	139	1.90	0.212
130366362	6.9	225	243	99	114	143	200	122	130	1.80	0.212
130366366	6.8	229	223	88	124	145	179	115	130	1.80	0.212
130366370	6.7	227	242	84	121	143	175	114	130	1.80	0.212
130366375	6.5	221	243	81	117	126	173	111	130	1.80	0.212
130366376	6.5	221	243	81	117	126	173	111	130	1.80	0.212

Laboratory Manager: Jane Allen

GSE-8.2.4-029 Rev 01 02/10

This test report shall not be reproduced, except in full, without written approval of the laboratory.

Kingstree Lab - US

Product : **TN 300-2-6**
Project : **Johnston Co LF, NC**

We, the Geocomposite Manufacturer, hereby certify the following for the material delivered to the above referenced project :

Roll	Geocomposite Roll Number	Geonet Roll Number	Geotextile Roll Number		Ply Adhesion (lb/in)		Geocomposite Transmissivity (m^2/sec)
			Side A	Side B	Minimum	Average	
1	404610001	404610001 - N	4046.002	4046.004	2.22	2.57	1.21×10^{-3}
2	404610002	404610002 - N	4046.002	4046.004			
3	404610003	404610003 - N	4046.002	4046.004			
4	404610004	404610004 - N	4046.002	4046.004			
5	404610005	404610005 - N	4046.002	4046.004			
6	404610006	404610006 - N	4046.002	4046.004			
7	404610007	404610007 - N	4046.001	4046.003			
8	404610008	404610008 - N	4046.001	4046.003			
9	404610009	404610009 - N	4046.001	4046.003			

571 Industrial Parkway, Commerce, GA 30529 Ph : 706-336-7000 Fax : 706-336-7007 Email : info@skaps.com

Product : **TN 300-2-6**
Project : **Johnston Co LF, NC**

We, the Geonet Manufacturer, hereby certify the following for the material sent to the above referenced project :

Geonet Roll Number	Resin Lot Number	Geonet Density (gm/cc)	Mass Per Unit Area (lb/ft^2)	Thickness (mils)	Carbon Black (%)	Tensile Strength (MD) (lb/in)	Transmissivity (m^2/sec)
404610001 - N	FPAX940062	0.9557	0.311	295	2.25	101	
404610002 - N	FPAX940062	0.9557					
404610003 - N	FPAX940062	0.9557					
404610004 - N	FPAX940062	0.9557					
404610005 - N	FPAX940062	0.9557					
404610006 - N	FPAX940062	0.9557					
404610007 - N	FPAX940062	0.9557					
404610008 - N	FPAX940062	0.9557					
404610009 - N	FPAX940062	0.9557					

571 Industrial Parkway, Commerce, GA 30529 Ph : 706-336-7000 Fax : 706-336-7007 Email : info@skaps.com

ASTM D 4716

Client:	Hallaton Inc.	**Job #**	4046
Project:	Johnston Co LF, NC		
Product:	TN 300-2-6		

Test Configuration:

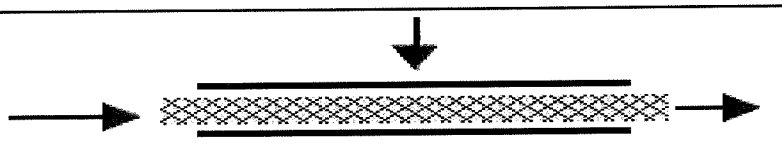

12 X 12 Test Surface

Test Information:

Boundary Conditions:	Sand Geocomposite Liner	**Normal Load:**	1000
		Gradient:	0.25
		Seating Time:	24 Hours
		Flow Direction:	MD

Test Results:

Roll No.	Pressure, psf	Gradient	Transmissivity, m^2/sec
			24 Hours
404610001	1000	0.25	1.21×10^{-3}

571 Industrial Parkway, Commerce, GA 30529 Ph : 706-336-7000 Fax : 706-336-7007 Email : info@skaps.com

POLYETHYLENE RESIN CERTIFICATION

Customer Name : Hallaton Inc.
Project Name : Johnston Co LF, NC
Geocomposite Manufacturer : SKAPS Industries
Geocomposite Production Plant : Commerce, GA
Geocomposite Brand Name : TN 300-2-6

We, the Geonet Manufacturer, hereby certify the following for the material delivered to the above referenced project:

Resin Supplier	Resin Production Plant	Resin Brand Name	Resin Lot Number	Property	Test Method	Units	Resin Supplier Value	Tested Value*
Marco Polo Int'l	Chevron, TX	HDPE	FPAX940062	Density	ASTM D1505	gm / cc	0.9520	0.9510
				Melt flow Index	ASTM D1238[(a)]	gm / 10 min	0.38	0.37

(a) Condition 190/2.16
* Data from SKAPS Quality Control

571 I trial Parkway, Commerce, GA 30529 Ph : 706-336-7000 Fax : 706-3[illegible]7007 Email : info@skaps.com

Product : TN 300-2-6
Project : Johnston Co LF, NC

We, the Geocomposite Manufacturer, hereby certify the following for the material delivered to the above referenced project :

GEOCOMP ROLL#	FABRIC ROLL#	WEIGHT oz/sq yd	MD TENSILE lbs.	MD ELONG %	XMD TENSILE lbs.	XMD ELONG %	PUNCTURE lbs.	AOS us sieve	PERM-ABL cm/sec	PERM-ITY sec^{-1}
404610001	4046.002	6.59	166	71	178	83	100	70	0.50	1.76
	4046.004	6.59	166	71	178	83	100	70	0.50	1.76

571 Industrial Parkway, Commerce, GA 30529 Ph : 706-336-7000 Fax : 706-336-7007 Email : info@skaps.com

GEOSYNTHETICS INVENTORY LOG
DRAINAGE GEOCOMPOSITE

Project Name: Johnston County C&DLF - Area 1 Closure
Project Number: JOHNSTON-09-5
Contractor: ES&J Enterprises
Storage Area: West of Area 1
Geosynthetics Installer: Hallaton
Inventory Monitor(s): BSH

Geosynthetic Material Type: Drainage Geocomposite
Geosynthetic Product Identification: GSE Fabrinet HS/SKAPS

Material		Material Dimensions		MQC Information?	CQA Conformance Sample No.	Remarks
Roll No.	Batch/Lot No.	Length (Feet)	Width (Feet)			
131312213	CYF610972	180	15	Y	L10096-02-01	FAILED TRANS
131312214	CYF610972	180	15	Y		(Use in Gas Trenches Only)
131312215	CYF610972	180	15	Y		
131313575	CYG610060	212	15	Y	L10096-02-02	PASS
131313576	CYG610060	212	15	Y		
131313577	CYG610060	212	15	Y		
131313580	CYG610060	212	15	Y		
131313581	CYG610060	212	15	Y		
131313582	CYG610060	212	15	Y		
131313583	CYG610060	212	15	Y		
131313594	CYG610060	212	15	Y		
131313595	CYG610060	212	15	Y		
131331843	CYK610831	212	15	Y	L10096-02-03	PASS
131331844	CYK610831	212	15	Y		
131331845	CYK610831	212	15	Y		
131331846	CYK610831	212	15	Y		
131338071	CAB610821	212	15	Y	L10096-02-04	PASS
131338072	CAB610821	212	15	Y		
131338073	CAB610821	212	15	Y		
131338074	CAB610821	212	15	Y		
131338075	CAB610821	212	15	Y		
131338076	CAB610821	212	15	Y		
131338078	CAB610821	212	15	Y		
131338079	CAB610821	212	15	Y		
131338080	CAB610821	212	15	Y		
131338081	CAB610821	212	15	Y		
131338082	CAB610821	212	15	Y		
131338083	CAB610821	212	15	Y		
131338084	CAB610821	212	15	Y		
131338085	CAB610821	212	15	Y		
131338086	CAB610821	212	15	Y		
131338087	CAB610821	212	15	Y		
131338088	CAB610821	212	15	Y		
131338089	CAB610821	212	15	Y		
131338090	CAB610821	212	15	Y		
131338091	CAB610821	212	15	Y		
131338092	CAB610821	212	15	Y		
131338093	CAB610821	212	15	Y		
131338094	CAB610821	212	15	Y		
131338095	CAB610821	212	15	Y		

Material		Material Dimensions		MQC Information?	CQA Conformance Sample No.	Remarks
Roll No.	Batch/Lot No.	Length (Feet)	Width (Feet)			
131338096	CAB610821	212	15	Y		
131338097	CAB610821	212	15	Y		
131338098	CAB610821	212	15	Y		
131338099	CAB610821	212	15	Y		
131338100	CAB610821	212	15	Y		
131338101	CAB610821	212	15	Y		
131338102	CAB610821	212	15	Y	L10096-02-05	PASS
131338103	CAB610821	212	15	Y		
131338104	CAB610821	212	15	Y		
131338105	CAB610821	212	15	Y		
131338106	CAB610821	212	15	Y		
131338107	CAB610821	212	15	Y		
131338108	CAB610821	212	15	Y		
131338109	CAB610821	212	15	Y		
131338110	CAB610821	212	15	Y		
131338111	CAB610821	212	15	Y		
131338112	CAB610821	212	15	Y		
131338113	CAB610821	212	15	Y		
131338114	CAB610821	212	15	Y		
131338115	CAB610821	212	15	Y		
131338116	CAB610821	212	15	Y		
131338117	CAB610821	212	15	Y		
131338118	CAB610821	212	15	Y		
131338119	CAB610821	212	15	Y		
131338120	CAB610821	212	15	Y		
131338121	CAB610821	212	15	Y		
131338126	CAB610821	212	15	Y		
131338127	CAB610821	212	15	Y		
131338128	CAB610821	212	15	Y		
131338129	CAB610821	212	15	Y		
131338130	CAB610821	212	15	Y		
131338131	CAB610821	212	15	Y		
131338132	CAB610821	212	15	Y		
131338133	CAB610821	212	15	Y		
131338134	CAB610821	212	15	Y		
131338135	CAB610821	212	15	Y		
131338136	CAB610821	212	15	Y		
131338137	CAB610821	212	15	Y	L10096-02-06	PASS
131338138	CAB610821	212	15	Y		
131338139	CAB610821	212	15	Y		
131338140	CAB610821	212	15	Y		
131338141	CAB610821	212	15	Y		
131338142	CAB610821	212	15	Y		
131338143	CAB610821	212	15	Y		
131338144	CAB610821	212	15	Y		
131338145	CAB610821	212	15	Y		
131338146	CAB610821	212	15	Y		
131338147	CAB610821	212	15	Y		
131338148	CAB610821	212	15	Y		
131338149	CAB610821	212	15	Y		
131338150	CAB610821	212	15	Y		
131338151	CAB610821	212	15	Y		

Material		Material Dimensions		MQC Information?	CQA Conformance Sample No.	Remarks
Roll No.	Batch/Lot No.	Length (Feet)	Width (Feet)			
131338152	CAB610821	212	15	Y		
131338153	CAB610821	212	15	Y		
131338154	CAB610821	212	15	Y		
131338155	CAB610821	212	15	Y		
131338156	CAB610821	212	15	Y		
131338157	CAB610821	212	15	Y		
131338158	CAB610821	212	15	Y		
131338159	CAB610821	212	15	Y		
131338160	CAB610821	212	15	Y		
131338161	CAB610821	212	15	Y		
131338162	CAB610821	212	15	Y		
131338163	CAB610821	212	15	Y		
131338164	CAB610821	212	15	Y		
131338165	CAB610821	212	15	Y		
131338166	CAB610821	212	15	Y		
131338191	CAB610822	212	15	Y	L10096-02-07	PASS
131350881	CB20072203	212	15	Y		
131350882	CB20072203	212	15	Y	L10096-02-08	PASS
131350883	CB20072203	212	15	Y		
131350884	CB20072203	212	15	Y		
131350885	CB20072203	212	15	Y		
131350886	CB20072203	212	15	Y		
131350887	CB20072203	212	15	Y		
131350888	CB20072203	212	15	Y		
131350889	CB20072203	212	15	Y		
131350890	CB20072203	212	15	Y		
131350891	CB20072203	212	15	Y		
131350892	CB20072203	212	15	Y		
131350893	CB20072203	212	15	Y		
131350894	CB20072203	212	15	Y		
131350895	CB20072203	212	15	Y		
131350896	CB20072203	212	15	Y		
131350897	CB20072203	212	15	Y		
131350898	CB20072203	212	15	Y		
131350899	CB20072203	212	15	Y		
131350900	CB20072203	212	15	Y		
131350901	CB20072203	212	15	Y		
131350902	CB20072203	212	15	Y		
131350903	CB20072203	212	15	Y		
131350904	CB20072203	212	15	Y		
131350905	CB20072203	212	15	Y		
131350906	CB20072203	212	15	Y		
131350907	CB20072203	212	15	Y		
131350908	CB20072203	212	15	Y		
131350909	CB20072203	212	15	Y		
131350910	CB20072203	212	15	Y		
131350911	CB20072203	212	15	Y	L10096-02-09	PASS
131350912	CB20072203	212	15	Y		
131350913	CB20072203	212	15	Y		
131350914	CB20072203	212	15	Y		
131350915	CB20072203	212	15	Y		
131350916	CB20072203	212	15	Y		

Material		Material Dimensions		MQC	CQA	Remarks
Roll No.	Batch/Lot No.	Length (Feet)	Width (Feet)	Information?	Conformance Sample No.	
131350917	CB20072203	212	15	Y		
131350918	CB20072203	212	15	Y		
131350919	CB20072203	212	15	Y		
131350920	CB20072203	212	15	Y		
131350921	CB20072203	212	15	Y		
131350922	CB20072203	212	15	Y		
131350923	CB20072203	212	15	Y		
131350924	CB20072203	212	15	Y		
131350925	CB20072203	212	15	Y		
131350926	CB20072203	212	15	Y		
131350927	CB20072203	212	15	Y		
131350928	CB20072203	212	15	Y		
131350929	CB20072203	212	15	Y		
131350930	CB20072203	212	15	Y		
131350931	CB20072203	212	15	Y		
131350932	CB20072203	212	15	Y		
131350933	CB20072203	212	15	Y		
131350934	CB20072203	212	15	Y		
131350935	CB20072203	212	15	Y		
131350936	CB20072203	212	15	Y		
131350937	CB20072203	212	15	Y		
131350938	CB20072203	212	15	Y		
131350939	CB20072203	212	15	Y		
131350940	CB20072203	212	15	Y		
131350941	CB20072203	212	15	Y	L10096-02-10	PASS
131350942	CB20072203	212	15	Y		
131350943	CB20072203	212	15	Y		
131350944	CB20072203	212	15	Y		
131350945	CB20072203	212	15	Y		
131350946	CB20072203	212	15	Y		
131350947	CB20072203	212	15	Y		
131350948	CB20072203	212	15	Y		
131350949	CB20072203	212	15	Y		
131350950	CB20072203	212	15	Y		
131350951	CB20072203	212	15	Y		
131350952	CB20072203	212	15	Y		
131350953	CB20072203	212	15	Y		
404610001	FPAX940062	200	14.5	Y		
404610002	FPAX940062	200	14.5	Y		
404610003	FPAX940062	200	14.5	Y		
404610004	FPAX940062	200	14.5	Y		
404610005	FPAX940062	200	14.5	Y		
404610006	FPAX940062	200	14.5	Y		
404610007	FPAX940062	200	14.5	Y		
404610008	FPAX940062	200	14.5	Y		
404610009	FPAX940062	200	14.5	Y	L10096-05-01	FAILED TRANS
						(Use on Flatter N. Slope Only)

Material		Material Dimensions		MQC Information?	CQA Conformance Sample No.	Remarks
Roll No.	Batch/Lot No.	Length (Feet)	Width (Feet)			

Totals:

Total Rolls:	190
Total Lots:	6
Total SF:	600,240

CONFORMANCE TEST RESULTS

geotechnics
INTEGRITY IN TESTING

CLIENT: RICHARDSON SMITH GARDNER & ASSOCIATES, INC.
CLIENT PROJECT: JOHNSTON COUNTY LANDFILL
PROJECT NO.: L10096-02
LAB ID NO.: L10096-02-01
MATERIAL: GSE 275 MIL GEOCOMPOSITE
ROLL NO: 131312213

TEST	ASTM METHOD	UNITS	SPECIMEN NO. 1	2	3	4	5	AVE	STD
Geonet									
THICKNESS	D 5199	inches	0.2823	0.2823	0.2796	0.2798	0.2766		
			0.2774	0.2809	0.2813	0.2824	0.2867	**0.2809**	0.0029
DENSITY	D 1505	g/cc	0.9560	0.9560	0.9559			**0.9560**	0.0001
Geocomposite									
PLY ADHESION	GRI-GC7								
	SIDE "A"	MD-lb/in	2.6	1.7	2.5	2.5	1.9	**2.24**	0.417
	SIDE"B"	MD-lb/in	8.6	2.6	2.6	3.1	3.6	**4.10**	2.542

CHECKED BY: BF DATE: 10-7-10

\\GEOSERVER\Data Drive\Synthetics\2010 SYNTHETICS\096 - RSGA - JOHNSTON COUNTY LANDFILL\[L10096-02-01 COMP JOHNSTON COUNTY L L10096-02-01 10/7/2010

TRANSMISSIVITY TEST RESULTS

ASTM D 4716-00

geotechnics
INTEGRITY IN TESTING

CLIENT: Richardson Smith Gardner & Associates, Inc.
PROJECT: JOHNSTON COUNTY LANDFILL
MATERIAL: GSE 275 MIL GEOCOMPOSITE

PROJECT NO.: L10096-02
LAB I.D. NO.: L10096-02-01
ROLL NO.: 131312213
REPLICATE NO.: 1 of 1

TEST SECTION: OTTOWA SAND
GEOCOMPOSITE-MD
30-MIL TEXTURED LLDPE

1,000 psf NORMAL COMPRESSIVE STRESS

ELAPSED TIME (hrs)	MANOMETERS RES. (in)	MANOMETERS WEIR (in)	HYDR. GRAD.	COLLECTION DATA VOLUME (ml)	COLLECTION DATA TIME (sec.)	WATER TEMP °C	AVERAGE FLOW RATE (l/s-m)	AVERAGE FLOW RATE (gpm/ft)	CALCULATED TRANSMISSIVITY (m2/sec)
0.25	3.55	0.55	0.25	1070 1070 1065	15 15 15	20.4	2.25E-01	1.088	9.01E-04
1	3.55	0.55	0.25	970 970 970	15 15 15	20.5	2.04E-01	0.986	8.16E-04
24	3.55	0.55	0.25	905 905 905	15 15 15	20.1	1.92E-01	0.929	7.69E-04

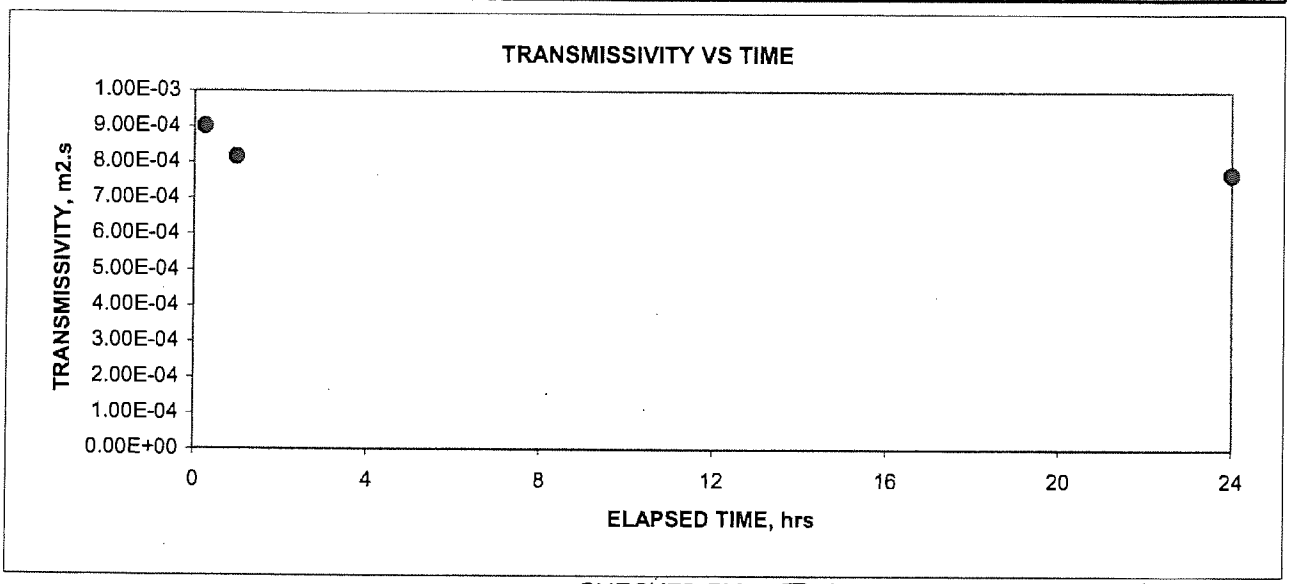

CHECKED BY: J.O DATE: 10-8-10

C:\My Documents\EXCEL\Templates\[Trans100hr1Load1Grad.xls]Sheet1
\\GEOSERVER\Data Drive\Synthetics\2010 SYNTHETICS\096 - RSGA - JOHNSTON COUNTY LANDFILL\[L10096-02-01 TRANS JOHNSTON COUNT L10096-02-01 10/7/2010

CONFORMANCE TEST RESULTS

CLIENT: RICHARDSON SMITH GARDNER & ASSOCIATES, INC.
CLIENT PROJECT: JOHNSTON COUNTY LANDFILL
PROJECT NO.: L10096-02
LAB ID NO.: L10096-02-02
MATERIAL: GSE 275 MIL GEOCOMPOSITE
ROLL NO: 131313575

TEST	ASTM METHOD	UNITS	SPECIMEN NO. 1	2	3	4	5	AVE	STD
Geonet									
THICKNESS	D 5199	inches	0.2765	0.2776	0.2787	0.2798	0.2802		
			0.2813	0.2856	0.2867	0.2767	0.2808	**0.2804**	0.0035
DENSITY	D 1505	g/cc	0.9564	0.9561	0.9560			**0.9562**	0.0002
Geocomposite									
PLY ADHESION	GRI-GC7								
	SIDE "A"	MD-lb/in	1.1	5.9	0.9	3.2	2.7	**2.76**	2.038
	SIDE"B"	MD-lb/in	1.3	5.2	0.3	4.7	3.3	**2.98**	2.119

CHECKED BY: BF DATE: 10-7-10

\\GEOSERVER\Data Drive\Synthetics\2010 SYNTHETICS\096 - RSGA - JOHNSTON COUNTY LANDFILL\[L10096-02-02 COMP JOHNSTON COUNTY L L10096-02-02 10/7/2010

TRANSMISSIVITY TEST RESULTS

ASTM D 4716-00

CLIENT: Richardson Smith Gardner & Associates, Inc.
PROJECT: JOHNSTON COUNTY LANDFILL
MATERIAL: GSE 275 MIL GEOCOMPOSITE

PROJECT NO.: L10096-02
LAB I.D. NO.: L10096-02-02
ROLL NO.: 131313575
REPLICATE NO.: 1 of 1

TEST SECTION: OTTOWA SAND
GEOCOMPOSITE-MD
30-MIL TEXTURED LLDPE

1,000 psf NORMAL COMPRESSIVE STRESS

ELAPSED TIME (hrs)	MANOMETERS RES. (in)	MANOMETERS WEIR (in)	HYDR. GRAD.	COLLECTION DATA VOLUME (ml)	COLLECTION DATA TIME (sec.)	WATER TEMP °C	AVERAGE FLOW RATE (l/s-m)	AVERAGE FLOW RATE (gpm/ft)	CALCULATED TRANSMISSIVITY (m2/sec)
0.25	3.30	0.30	0.25	1210 1210 1210	10 10 10	20.4	3.83E-01	1.849	1.53E-03
1	3.30	0.30	0.25	1160 1160 1155	10 10 10	20.7	3.64E-01	1.757	1.45E-03
24	3.30	0.30	0.25	1130 1130 1125	10 10 10	20.2	3.59E-01	1.732	1.43E-03

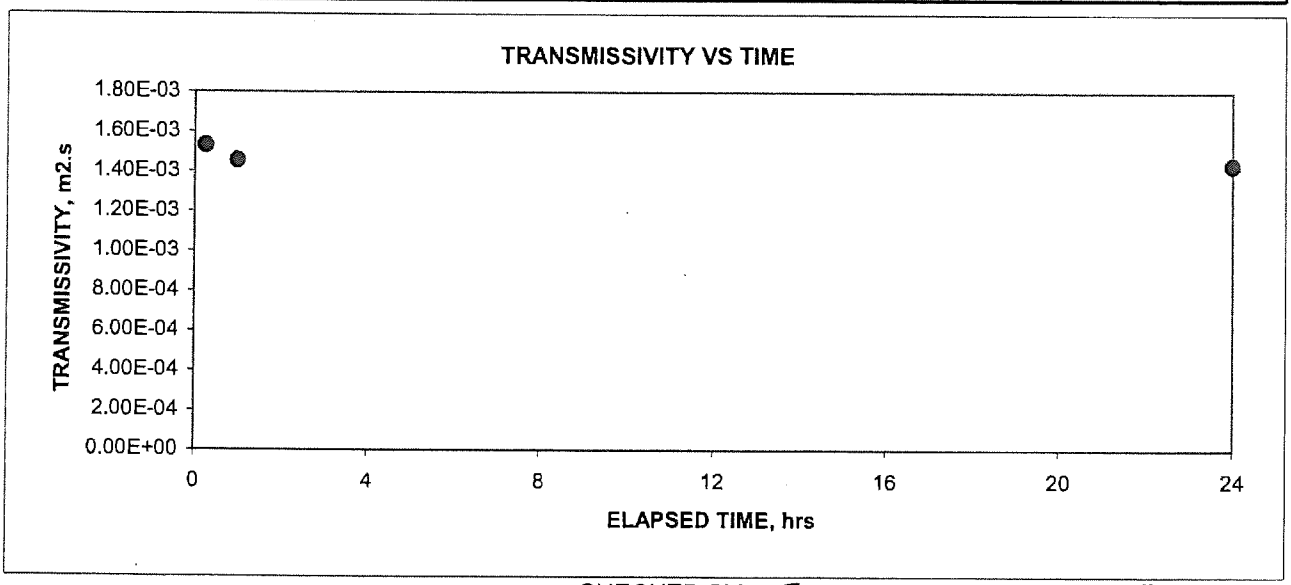

CHECKED BY: J.O DATE: 10-8-10

C:\My Documents\EXCEL\Templates\[Trans100hr1Load1Grad.xls]Sheet1
\\GEOSERVER\Data Drive\Synthetics\2010 SYNTHETICS\096 - RSGA - JOHNSTON COUNTY LANDFILL\[L10096-02-02 TRANS JOHNSTON COUNT L10096-02-02 10/7/2010

CONFORMANCE TEST RESULTS

Geotechnics
INTEGRITY IN TESTING

CLIENT: RICHARDSON SMITH GARDNER & ASSOCIATES, INC.
CLIENT PROJECT: JOHNSTON COUNTY LANDFILL
PROJECT NO.: L10096-02
LAB ID NO.: L10096-02-03
MATERIAL: GSE 275 MIL GEOCOMPOSITE
ROLL NO: 131331843

TEST	ASTM METHOD	UNITS	SPECIMEN NO. 1	2	3	4	5	AVE	STD
Geonet									
THICKNESS	D 5199	inches	0.2846	0.2838	0.2799	0.2801	0.2798		
			0.2808	0.2816	0.2798	0.2800	0.2796	**0.2810**	0.0018
DENSITY	D 1505	g/cc	0.9563	0.9561	0.9561			**0.9562**	0.0001
Geocomposite									
PLY ADHESION	GRI-GC7								
	SIDE "A"	MD-lb/in	2.0	1.6	1.5	1.5	1.9	**1.68**	0.226
	SIDE"B"	MD-lb/in	1.4	0.9	1.2	0.7	0.8	**1.01**	0.288

CHECKED BY: BF DATE: 10-7-10

\\GEOSERVER\Data Drive\Synthetics\2010 SYNTHETICS\096 - RSGA - JOHNSTON COUNTY LANDFILL\[L10096-02-03 COMP JOHNSTON COUNTY L L10096-02-03 10/7/2010

TRANSMISSIVITY TEST RESULTS

ASTM D 4716-00

CLIENT: Richardson Smith Gardner & Associates, Inc.
PROJECT: JOHNSTON COUNTY LANDFILL
MATERIAL: GSE 275 MIL GEOCOMPOSITE

PROJECT NO.: L10096-02
LAB I.D. NO.: L10096-02-03
ROLL NO.: 131331843
REPLICATE NO.: 1 of 1

TEST SECTION: OTTOWA SAND
GEOCOMPOSITE-MD
30-MIL TEXTURED LLDPE

1,000 psf NORMAL COMPRESSIVE STRESS

ELAPSED TIME (hrs)	MANOMETERS RES. (in)	MANOMETERS WEIR (in)	HYDR. GRAD.	COLLECTION DATA VOLUME (ml)	COLLECTION DATA TIME (sec.)	WATER TEMP °C	AVERAGE FLOW RATE (l/s-m)	AVERAGE FLOW RATE (gpm/ft)	CALCULATED TRANSMISSIVITY (m2/sec)
0.25	3.55	0.55	0.25	1290 1290 1285	10 10 10	20.2	4.09E-01	1.978	1.64E-03
1	3.55	0.55	0.25	1240 1240 1240	10 10 10	20.3	3.93E-01	1.899	1.57E-03
24	3.55	0.55	0.25	1200 1200 1200	10 10 10	20.1	3.82E-01	1.847	1.53E-03

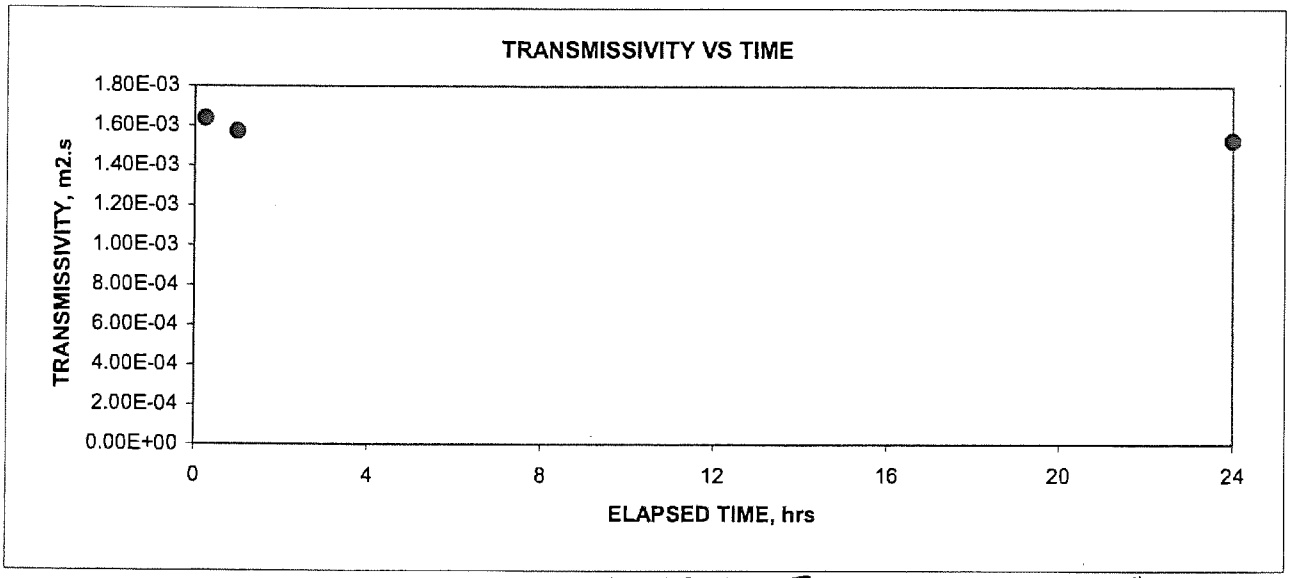

CHECKED BY: J.O DATE: 10-8-10

C:\My Documents\EXCEL\Templates\[Trans100hr1Load1Grad.xls]Sheet1
\\GEOSERVER\Data Drive\Synthetics\2010 SYNTHETICS\096 - RSGA - JOHNSTON COUNTY LANDFILL\[L10096-02-03 TRANS JOHNSTON COUNT L10096-02-03 10/7/2010

CONFORMANCE TEST RESULTS

CLIENT: RICHARDSON SMITH GARDNER & ASSOCIATES, INC.
CLIENT PROJECT: JOHNSTON COUNTY LANDFILL
PROJECT NO.: L10096-02
LAB ID NO.: L10096-02-04
MATERIAL: GSE 275 MIL GEOCOMPOSITE
ROLL NO: 131338071

TEST	ASTM METHOD	UNITS	SPECIMEN NO. 1	2	3	4	5	AVE	STD
Geonet									
THICKNESS	D 5199	inches	0.2802	0.2777	0.2800	0.2801	0.2809		
			0.2799	0.2809	0.2811	0.2822	0.2790	**0.2802**	0.0012
DENSITY	D 1505	g/cc	0.9555	0.9553	0.9552			**0.9553**	0.0002
Geocomposite									
PLY ADHESION	GRI-GC7								
	SIDE "A"	MD-lb/in	3.5	2.0	4.6	4.1	5.7	**3.95**	1.366
	SIDE"B"	MD-lb/in	4.8	2.5	4.3	3.3	3.8	**3.73**	0.890

CHECKED BY: BF DATE: 10-7-10

\\GEOSERVER\Data Drive\Synthetics\2010 SYNTHETICS\096 - RSGA - JOHNSTON COUNTY LANDFILL\[L10096-02-04 COMP JOHNSTON COUNTY L L10096-02-04

10/7/2010

544 Braddock Avenue • East Pittsburgh, PA 15112 • 412-823-7600 • FAX 412-823-8999 • www.geotechnics.net

TRANSMISSIVITY TEST RESULTS

ASTM D 4716-00

geotechnics
INTEGRITY IN TESTING

CLIENT: Richardson Smith Gardner & Associates, Inc.
PROJECT: JOHNSTON COUNTY LANDFILL
MATERIAL: GSE 275 MIL GEOCOMPOSITE

PROJECT NO.: L10096-02
LAB I.D. NO.: L10096-02-04
ROLL NO.: 131338071
REPLICATE NO.: 1 of 1

TEST SECTION: OTTOWA SAND
GEOCOMPOSITE-MD
30-MIL TEXTURED LLDPE

1,000 psf NORMAL COMPRESSIVE STRESS

ELAPSED TIME (hrs)	MANOMETERS RES. (in)	MANOMETERS WEIR (in)	HYDR. GRAD.	COLLECTION DATA VOLUME (ml)	COLLECTION DATA TIME (sec.)	WATER TEMP °C	AVERAGE FLOW RATE (l/s-m)	AVERAGE FLOW RATE (gpm/ft)	CALCULATED TRANSMISSIVITY (m2/sec)
0.25	3.35	0.35	0.25	1550 1550 1550	10 10 10	20.3	4.91E-01	2.374	1.97E-03
1	3.35	0.35	0.25	1500 1500 1500	10 10 10	20.5	4.73E-01	2.286	1.89E-03
24	3.35	0.35	0.25	1450 1450 1450	10 10 10	20.3	4.60E-01	2.221	1.84E-03

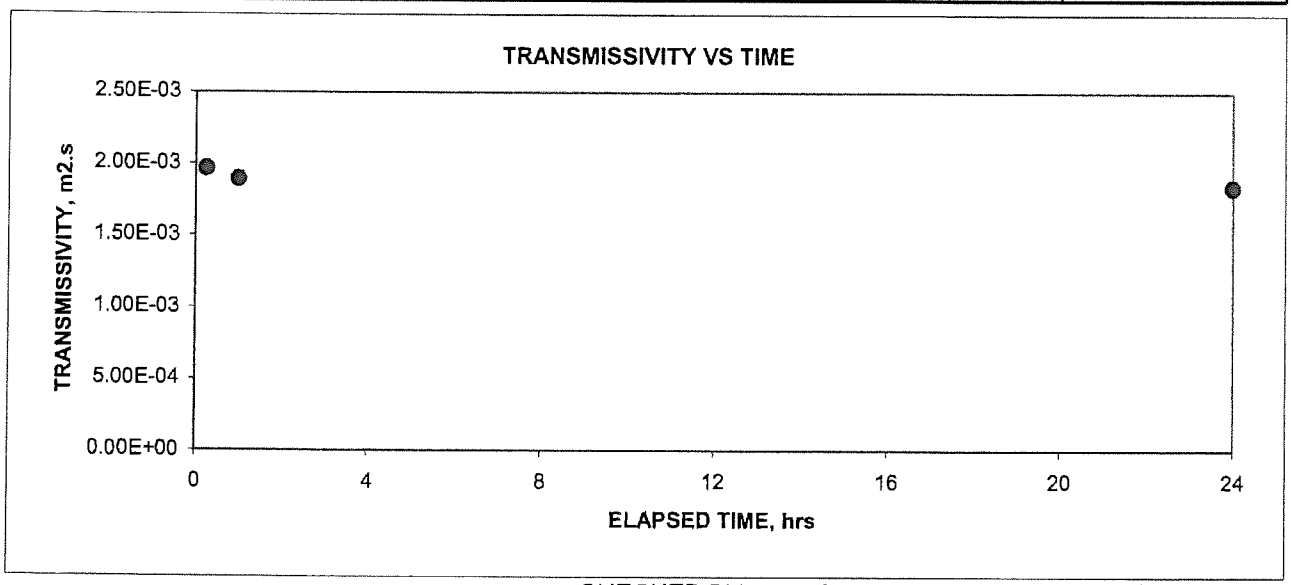

CHECKED BY: J.O DATE: 10-8-10

C:\My Documents\EXCEL\Templates\[Trans100hr1Load1Grad.xls]Sheet1
\\GEOSERVER\Data Drive\Synthetics\2010 SYNTHETICS\096 - RSGA - JOHNSTON COUNTY LANDFILL\[L10096-02-04 TRANS JOHNSTON COUNT L10096-02-04 10/7/2010

CONFORMANCE TEST RESULTS

CLIENT: RICHARDSON SMITH GARDNER & ASSOCIATES, INC.
CLIENT PROJECT: JOHNSTON COUNTY LANDFILL
PROJECT NO.: L10096-02
LAB ID NO.: L10096-02-05
MATERIAL: GSE 275 MIL GEOCOMPOSITE
ROLL NO: 131338102

TEST	ASTM METHOD	UNITS	SPECIMEN NO. 1	2	3	4	5	AVE	STD
Geonet									
THICKNESS	D 5199	inches	0.2801	0.2800	0.2776	0.2791	0.2788		
			0.2786	0.2798	0.2801	0.2796	0.2800	**0.2794**	0.0008
DENSITY	D 1505	g/cc	0.9561	0.9560	0.9559			**0.9560**	0.0001
Geocomposite									
PLY ADHESION	GRI-GC7								
	SIDE "A"	MD-lb/in	2.9	1.4	1.1	1.1	0.6	**1.39**	0.862
	SIDE"B"	MD-lb/in	3.0	3.0	1.7	2.2	0.7	**2.12**	0.955

CHECKED BY: BF DATE: 10-7-10

\\GEOSERVER\Data Drive\Synthetics\2010 SYNTHETICS\096 - RSGA - JOHNSTON COUNTY LANDFILL\[L10096-02-05 COMP JOHNSTON COUNTY L L10096-02-05 10/7/2010

CONFORMANCE TEST RESULTS

CLIENT: RICHARDSON SMITH GARDNER & ASSOCIATES, INC.
CLIENT PROJECT: JOHNSTON COUNTY LANDFILL
PROJECT NO.: L10096-02
LAB ID NO.: L10096-02-06
MATERIAL: GSE 275 MIL GEOCOMPOSITE
ROLL NO: 131338137

TEST	ASTM METHOD	UNITS	SPECIMEN NO. 1	2	3	4	5	AVE	STD
Geonet									
THICKNESS	D 5199	inches	0.2778	0.2798	0.2801	0.2799	0.2799		
			0.2798	0.2777	0.2788	0.2800	0.2800	**0.2794**	0.0009
DENSITY	D 1505	g/cc	0.9565	0.9560	0.9557			**0.9561**	0.0004
Geocomposite									
PLY ADHESION	GRI-GC7								
	SIDE "A"	MD-lb/in	4.2	5.2	5.1	3.6	3.3	**4.27**	0.867
	SIDE"B"	MD-lb/in	4.1	3.2	3.0	6.4	5.1	**4.35**	1.433

CHECKED BY: BF DATE: 10-7-10

\\GEOSERVER\Data Drive\Synthetics\2010 SYNTHETICS\096 - RSGA - JOHNSTON COUNTY LANDFILL\[L10096-02-06 COMP JOHNSTON COUNTY L L10096-02-06 10/7/2010

CONFORMANCE TEST RESULTS

CLIENT: RICHARDSON SMITH GARDNER & ASSOCIATES, INC.
CLIENT PROJECT: JOHNSTON COUNTY LANDFILL
PROJECT NO.: L10096-02
LAB ID NO.: L10096-02-07
MATERIAL: GSE 275 MIL GEOCOMPOSITE
ROLL NO: 131338191

TEST	ASTM METHOD	UNITS	SPECIMEN NO. 1	2	3	4	5	AVE	STD
Geonet									
THICKNESS	D 5199	inches	0.2776	0.2798	0.2787	0.2776	0.2800		
			0.2800	0.2766	0.2787	0.2788	0.2777	**0.2786**	0.0012
DENSITY	D 1505	g/cc	0.9567	0.9561	0.9560			**0.9563**	0.0004
Geocomposite									
PLY ADHESION	GRI-GC7								
	SIDE "A"	MD-lb/in	2.1	3.0	0.9	0.5	2.1	**1.69**	1.008
	SIDE"B"	MD-lb/in	2.2	3.8	0.6	0.6	3.4	**2.11**	1.503

CHECKED BY: BF DATE: 10-7-10

\\GEOSERVER\Data Drive\Synthetics\2010 SYNTHETICS\096 - RSGA - JOHNSTON COUNTY LANDFILL\[L10096-02-07 COMP JOHNSTON COUNTY L L10096-02-07 10/7/2010

TRANSMISSIVITY TEST RESULTS

ASTM D 4716-00

geotechnics
INTEGRITY IN TESTING

CLIENT: Richardson Smith Gardner & Associates, Inc.
PROJECT: JOHNSTON COUNTY LANDFILL
MATERIAL: GSE 275 MIL GEOCOMPOSITE

PROJECT NO.: L10096-02
LAB I.D. NO.: L10096-02-07
ROLL NO.: 131338191
REPLICATE NO.: 1 of 1

TEST SECTION: OTTOWA SAND
GEOCOMPOSITE-MD
30-MIL TEXTURED LLDPE

1,000 psf NORMAL COMPRESSIVE STRESS

ELAPSED TIME (hrs)	MANOMETERS RES. (in)	MANOMETERS WEIR (in)	HYDR. GRAD.	COLLECTION DATA VOLUME (ml)	COLLECTION DATA TIME (sec.)	WATER TEMP °C	AVERAGE FLOW RATE (l/s-m)	AVERAGE FLOW RATE (gpm/ft)	CALCULATED TRANSMISSIVITY (m2/sec)
0.25	3.60	0.60	0.25	1685 1685 1685	10 10 10	20.2	5.35E-01	2.587	2.14E-03
1	3.60	0.60	0.25	1630 1630 1630	10 10 10	20.4	5.15E-01	2.491	2.06E-03
24	3.60	0.60	0.25	1590 1590 1590	10 10 10	20.1	5.06E-01	2.447	2.03E-03

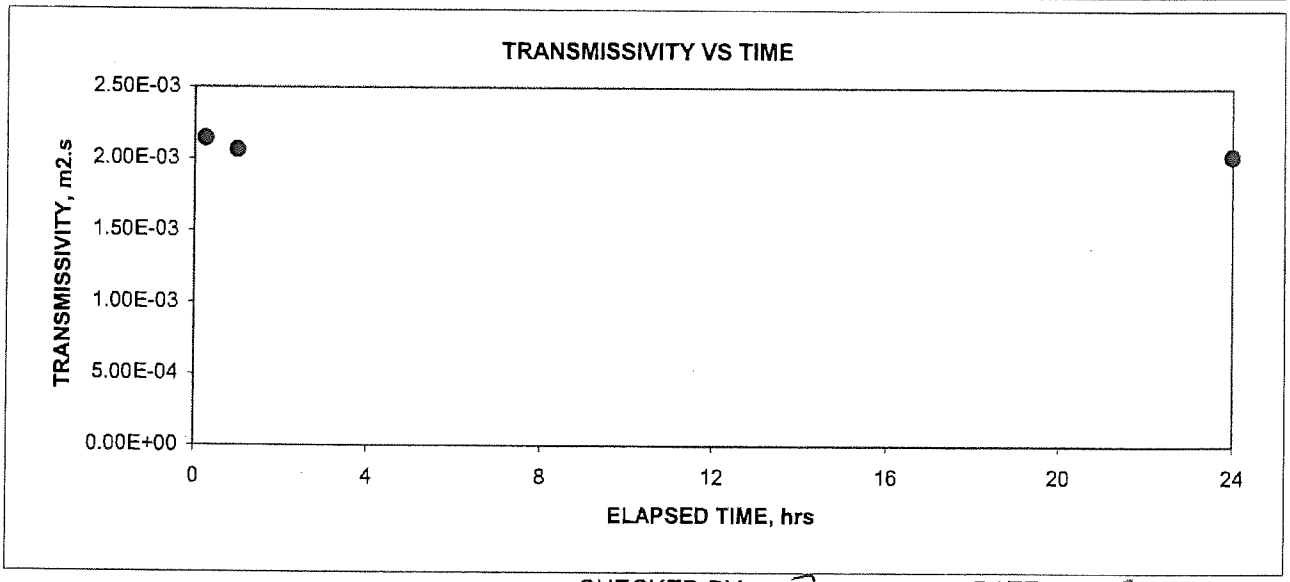

CHECKED BY: JC DATE: 10-8-10

C:\My Documents\EXCEL\Templates\[Trans100hr1Load1Grad.xls]Sheet1
\\GEOSERVER\Data Drive\Synthetics\2010 SYNTHETICS\096 - RSGA - JOHNSTON COUNTY LANDFILL\[L10096-02-07 TRANS JOHNSTON COUNT L10096-02-07 10/8/2010

CONFORMANCE TEST RESULTS

CLIENT: RICHARDSON SMITH GARDNER & ASSOCIATES, INC.
CLIENT PROJECT: JOHNSTON COUNTY LANDFILL
PROJECT NO.: L10096-02
LAB ID NO.: L10096-02-08
MATERIAL: GSE 275 MIL GEOCOMPOSITE
ROLL NO: 131350882

TEST	ASTM METHOD	UNITS	SPECIMEN NO. 1	2	3	4	5	AVE	STD
Geonet									
THICKNESS	D 5199	inches	0.2813	0.2812	0.2810	0.2766	0.2797		
			0.2766	0.2799	0.2799	0.2798	0.2788	**0.2795**	0.0017
DENSITY	D 1505	g/cc	0.9557	0.9557	0.9555			**0.9556**	0.0001
Geocomposite									
PLY ADHESION	GRI-GC7								
	SIDE "A"	MD-lb/in	2.6	1.8	2.9	1.9	2.4	**2.33**	0.449
	SIDE"B"	MD-lb/in	2.8	2.8	2.5	1.2	2.3	**2.32**	0.682

CHECKED BY: BF DATE: 10-7-10

\\GEOSERVER\Data Drive\Synthetics\2010 SYNTHETICS\096 - RSGA - JOHNSTON COUNTY LANDFILL\[L10096-02-08 COMP JOHNSTON COUNTY L L10096-02-08

10/7/2010

TRANSMISSIVITY TEST RESULTS

ASTM D 4716-00

geotechnics
INTEGRITY IN TESTING

CLIENT: Richardson Smith Gardner & Associates, Inc.
PROJECT: JOHNSTON COUNTY LANDFILL
MATERIAL: GSE 275 MIL GEOCOMPOSITE

PROJECT NO.: L10096-02
LAB I.D. NO.: L10096-02-08
ROLL NO.: 131350882
REPLICATE NO.: 1 of 1

TEST SECTION: OTTOWA SAND
GEOCOMPOSITE-MD
30-MIL TEXTURED LLDPE

1,000 psf NORMAL COMPRESSIVE STRESS

ELAPSED TIME (hrs)	MANOMETERS RES. (in)	MANOMETERS WEIR (in)	HYDR. GRAD.	COLLECTION DATA VOLUME (ml)	COLLECTION DATA TIME (sec.)	WATER TEMP °C	AVERAGE FLOW RATE (l/s-m)	AVERAGE FLOW RATE (gpm/ft)	CALCULATED TRANSMISSIVITY (m2/sec)
0.25	3.40	0.40	0.25	2874 2874 2874	14.22 14.55 14.78	20.5	6.25E-01	3.018	2.50E-03
1	3.40	0.40	0.25	2874 2874 2874	15.64 15.92 16.40	20.7	5.65E-01	2.728	2.26E-03
24	3.40	0.40	0.25	2874 2874 2874	16.97 17.65 17.78	20.3	5.22E-01	2.521	2.09E-03

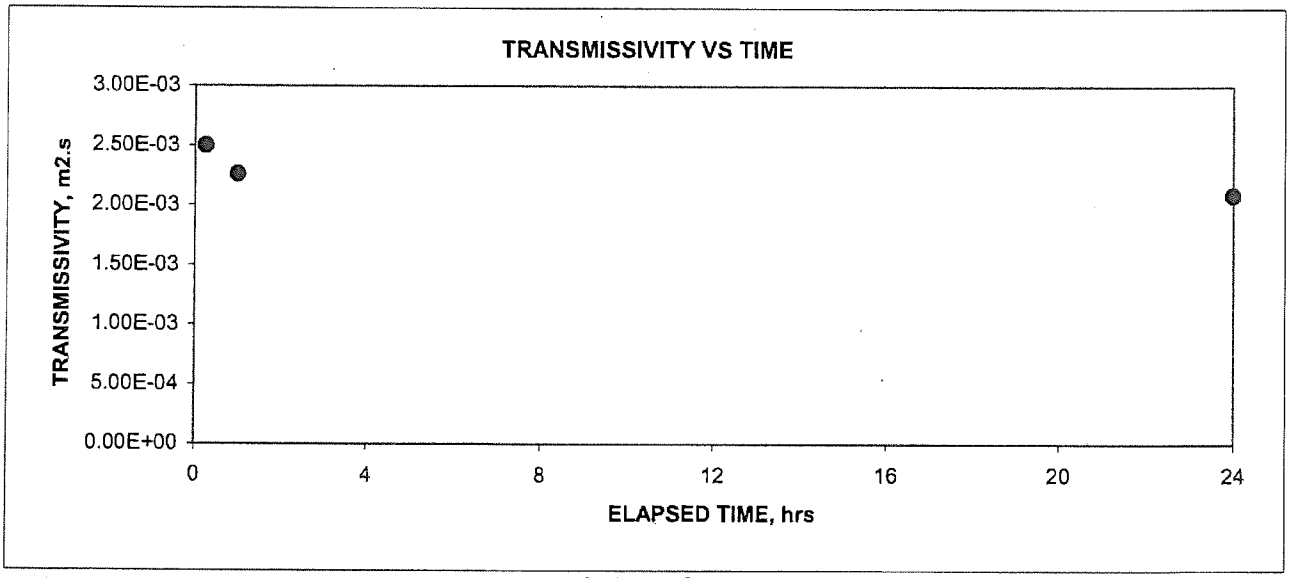

CHECKED BY: T.O DATE: 10-8-10

C:\My Documents\EXCEL\Templates\[Trans100hr1Load1Grad.xls]Sheet1
\\GEOSERVER\Data Drive\Synthetics\2010 SYNTHETICS\096 - RSGA - JOHNSTON COUNTY LANDFILL\[L10096-02-08 TRANS JOHNSTON COUNT L10096-02-08 10/8/2010

CONFORMANCE TEST RESULTS

CLIENT: RICHARDSON SMITH GARDNER & ASSOCIATES, INC.
CLIENT PROJECT: JOHNSTON COUNTY LANDFILL
PROJECT NO.: L10096-02
LAB ID NO.: L10096-02-09
MATERIAL: GSE 275 MIL GEOCOMPOSITE
ROLL NO: 131350911

TEST	ASTM METHOD	UNITS	SPECIMEN NO. 1	2	3	4	5	AVE	STD
Geonet									
THICKNESS	D 5199	inches	0.2798	0.2802	0.2798	0.2787	0.2776		
			0.2765	0.2766	0.2777	0.2803	0.2714	**0.2779**	0.0027
DENSITY	D 1505	g/cc	0.9559	0.9557	0.9555			**0.9557**	0.0002
Geocomposite									
PLY ADHESION	GRI-GC7								
	SIDE "A"	MD-lb/in	1.2	1.7	1.6	3.3	1.4	**1.81**	0.851
	SIDE"B"	MD-lb/in	1.3	1.8	1.4	0.7	1.2	**1.26**	0.371

CHECKED BY: BF DATE: 10-7-10

\\GEOSERVER\Data Drive\Synthetics\2010 SYNTHETICS\096 - RSGA - JOHNSTON COUNTY LANDFILL\[L10096-02-09 COMP JOHNSTON COUNTY L L10096-02-09 10/7/2010

CONFORMANCE TEST RESULTS

CLIENT: RICHARDSON SMITH GARDNER & ASSOCIATES, INC.
CLIENT PROJECT: JOHNSTON COUNTY LANDFILL
PROJECT NO.: L10096-02
LAB ID NO.: L10096-02-10
MATERIAL: GSE 275 MIL GEOCOMPOSITE
ROLL NO: 131350941

TEST	ASTM METHOD	UNITS	SPECIMEN NO. 1	2	3	4	5	AVE	STD
Geonet									
THICKNESS	D 5199	inches	0.2809	0.2813	0.2801	0.2824	0.2813		
			0.2800	0.2800	0.2825	0.2814	0.2824	**0.2812**	0.0010
DENSITY	D 1505	g/cc	0.9558	0.9555	0.9554			**0.9556**	0.0002
Geocomposite									
PLY ADHESION	GRI-GC7								
	SIDE "A"	MD-lb/in	2.0	2.6	3.0	2.7	2.4	**2.51**	0.383
	SIDE"B"	MD-lb/in	0.5	1.7	2.1	1.1	2.2	**1.52**	0.695

CHECKED BY: BF DATE: 10-7-10

\\GEOSERVER\Data Drive\Synthetics\2010 SYNTHETICS\096 - RSGA - JOHNSTON COUNTY LANDFILL\[L10096-02-10 COMP JOHNSTON COUNTY L L10096-02-10 10/7/2010

CONFORMANCE TEST RESULTS

Geotechnics
INTEGRITY IN TESTING

CLIENT: RICHARDSON SMITH GARDNER & ASSOCIATES, INC.
CLIENT PROJECT: JOHNSTON COUNTY LANDFILL
PROJECT NO.: L10096-05
LAB ID NO.: L10096-05-01
MATERIAL: SKAPS TN 300-2-6 GEOCOMPOSITE
ROLL NO: 404610009

TEST	ASTM METHOD	UNITS	SPECIMEN NO. 1	2	3	4	5	AVE	STD
Geonet									
THICKNESS	D 5199	inches	0.2901	0.2899	0.2911	0.2902	0.2888		
			0.2877	0.2912	0.2903	0.2898	0.2886	**0.2898**	0.0011
DENSITY	D 1505	g/cc	0.9489	0.9488	0.9486			**0.9488**	0.0002
Geocomposite									
PLY ADHESION	GRI-GC7								
	SIDE "A"	MD-lb/in	8.2	0.6	6.8	9.5	6.2	**6.26**	3.426
	SIDE"B"	MD-lb/in	8.8	1.4	13.1	10.6	9.4	**8.65**	4.360

CHECKED BY: BF DATE: 11-30-10

\\GEOSERVER\Data Drive\Synthetics\2010 SYNTHETICS\096 - RSGA - JOHNSTON COUNTY LANDFILL\[L10096-05-01 COMP JOHNSTON COUNTY L L10096-05-01 11/30/2010

TRANSMISSIVITY TEST RESULTS

ASTM D 4716-00

Geotechnics
INTEGRITY IN TESTING

CLIENT: Richardson Smith Gardner & Associates, Inc.
PROJECT: JOHNSTON COUNTY LANDFILL
MATERIAL: SKAPS TN 300-2-6 GEOCOMPOSITE

PROJECT NO.: L10096-05
LAB I.D. NO.: L10096-05-01
ROLL NO.: 404610009
REPLICATE NO.: 1 of 1

TEST SECTION: OTTOWA SAND
GEOCOMPOSITE-MD
30-MIL TEXTURED LLDPE

1,000 psf NORMAL COMPRESSIVE STRESS

ELAPSED TIME (hrs)	MANOMETERS RES. (in)	MANOMETERS WEIR (in)	HYDR. GRAD.	COLLECTION DATA VOLUME (ml)	COLLECTION DATA TIME (sec.)	WATER TEMP °C	AVERAGE FLOW RATE (l/s-m)	AVERAGE FLOW RATE (gpm/ft)	CALCULATED TRANSMISSIVITY (m2/sec)
0.25	3.50	0.50	0.25	960 960 960	15 15 15	18.6	2.11E-01	1.021	8.45E-04
1	3.50	0.50	0.25	900 900 900	15 15 15	18.8	1.97E-01	0.952	7.89E-04
24	3.50	0.50	0.25	860 860 860	15 15 15	19.0	1.87E-01	0.906	7.50E-04

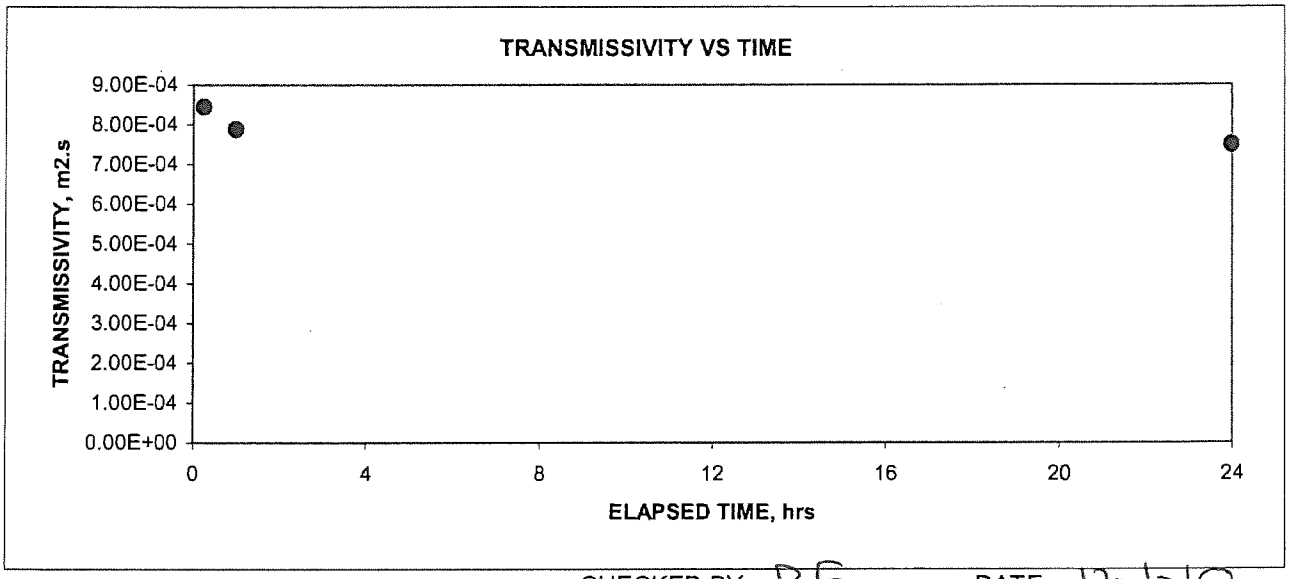

CHECKED BY: BF DATE: 12-1-10

C:\My Documents\EXCEL\Templates\[Trans100hr1Load1Grad.xls]Sheet1
\\GEOSERVER\Data Drive\Synthetics\2010 SYNTHETICS\096 - RSGA - JOHNSTON COUNTY LANDFILL\[L10096-05-01 TRANS JOHNSTON COUNT L10096-05-01 12/1/2010

Appendix I

Geotextile CQA Data

I1. **Manufacturer's Product Data Submittals and Quality Control Certificates**

I2. **Geosynthetics Inventory - Geotextiles**

I3. **CQA Test Results - Material Control Tests**

HANES GEO COMPONENTS

A Leggett & Platt COMPANY

June 23, 2010

REF: TerraTex N06 Nonwoven Geotextile

This is to certify that TerraTex N06 is a nonwoven geotextile made up of polypropylene fibers. These fibers are needled to form a stable and durable network such that the fibers retain their relative position. It is non-biodegradable and resistant to most soil chemicals, acids and alkali with a pH range of 3 to 12. TerraTex N06 is manufactured to meet or exceed the following minimum average roll values:

PROPERTY	UNIT	ASTM TEST METHOD	Minimum Average Roll Values
Weight (Typical)	oz/yd^2 (g/m^2)	ASTM D5261	6.0 (203)
Grab Tensile	lbs (kN)	ASTM D4632	160 (0.711)
Grab Elongation	%	ASTM D4632	50
Trapezoid Tear	lbs (kN)	ASTM D4533	65 (0.289)
Puncture Resistance	lbs (kN)	ASTM D4833	90 (0.40)
CBR Puncture	lbs (kN)	ASTM D6241	410 (1.82)
Mullen Burst	psi (kPa)	ASTM D3786	315 (2170)
Permittivity	sec^{-1}	ASTM D4491	1.6
Water Flow	gpm/ft^2 (1/min/m^2)	ASTM D4491	110 (4480)
A.O.S.	U.S. Sieve (mm)	ASTM D4751	70 (0.212)
U.V. Resistance	%/hrs	ASTM D4355	70/500

Sincerely,

Keith Harris

Keith Harris
Technical Director

I, Salli B. John, Notary, hereby acknowledge that Keith Harris personally appeared before me this day and signed the forgoing instrument.

Notary Salli B. John *Expiration Date:* November 1, 2014

SALLI B. JOHN
NOTARY PUBLIC
FORSYTH COUNTY, NC
MY COMMISSION EXPIRES NOV. 1, 2014

815 Buxton Street Winston Salem, NC 27101
888 - 239 - 4539 • Fax: 336 - 747 - 1652
www.hanesgeo.com info@hanesgeo.com

HANES GEO COMPONENTS

A Leggett & Platt COMPANY

June 23, 2010

REF: TerraTex N04.5 Nonwoven Geotextile

This is to certify that TerraTex N04.5 is a nonwoven geotextile made up of polypropylene fibers. These fibers are needled to form a stable and durable network such that the fibers retain their relative position. It is non-biodegradable and resistant to most soil chemicals, acids and alkali with a pH range of 3 to 12. TerraTex N04.5 is manufactured to meet or exceed the following minimum average roll values:

PROPERTY	UNIT	ASTM TEST METHOD	Minimum Average Roll Values
Weight (Typical)	oz/yd^2 (g/m^2)	ASTM D5261	4.5 (153)
Grab Tensile	lbs (kN)	ASTM D4632	120 (0.533)
Grab Elongation	%	ASTM D4632	50
Trapezoid Tear	lbs (kN)	ASTM D4533	50 (0.222)
Puncture Resistance	lbs (kN)	ASTM D4833	70 (0.311)
CBR Puncture	lbs (kN)	ASTM D6241	340 (1.46)
Mullen Burst	psi (kPa)	ASTM D3786	240 (1654)
Permittivity	sec^{-1}	ASTM D4491	1.8
Water Flow	gpm/ft^2 (1/min/m^2)	ASTM D4491	120 (4885)
A.O.S.	U.S. Sieve (mm)	ASTM D4751	70 (0.212)
U.V. Resistance	%/hrs	ASTM D4355	70/500

Sincerely,

Keith Harris
Technical Director

I, Salli B. John, Notary, hereby acknowledge that Keith Harris personally appeared before me this day and signed the forgoing instrument.

Notary: Salli B. John *Expiration Date:* November 1, 2014

SALLI B. JOHN
NOTARY PUBLIC
FORSYTH COUNTY, NC
MY COMMISSION EXPIRES NOV. 1, 2014

815 Buxton Street Winston Salem, NC 27101
888 - 239 - 4539 • Fax: 336 - 747 - 1652
www.hanesgeo.com info@hanesgeo.com

Hanes														
PO # 26072														
				GRAB	GRAB	ELNG	ELNG	TRAP	TRAP	PUNC	BRST	FLOW	PERM	AOS
Roll number	Style	Width	Length	MD	XMD	MD	XMD	MD	XMD	REST		RATE	ITY	
31009323448	N06	180	300	189.24	196.23	70	94	86.55	102.21	113.57	359	174.68	2.365	70
31009323459	N06	180	300	189.24	196.23	70	94	86.55	102.21	113.57	359	174.68	2.365	70
3100932346A	N06	180	300	196.11	196.95	70	95	79.17	93.91	113.57	359	174.68	2.365	70
3100932347B	N06	180	300	196.11	196.95	70	95	79.17	93.91	113.57	359	174.68	2.365	70
3100932348C	N06	180	300	196.11	196.95	70	95	79.17	93.91	113.57	359	174.68	2.365	70
3100932349D	N06	180	300	196.11	196.95	70	95	79.17	93.91	113.57	359	174.68	2.365	70
31009323506	N06	180	300	196.11	196.95	70	95	79.17	93.91	113.57	359	174.68	2.365	70
31009323517	N06	180	300	196.11	196.95	70	95	79.17	93.91	113.57	359	174.68	2.365	70
31009323528	N06	180	300	192.59	219.35	67	95	78.67	99.04	113.57	359	174.68	2.365	70
31009323539	N06	180	300	192.59	219.35	67	95	78.67	99.04	113.57	359	174.68	2.365	70
3100932354A	N06	180	300	192.59	219.35	67	95	78.67	99.04	113.57	359	174.68	2.365	70
3100932355B	N06	180	300	192.59	219.35	67	95	78.67	99.04	113.57	359	174.68	2.365	70
3100932356C	N06	180	300	192.59	219.35	67	95	78.67	99.04	113.57	359	174.68	2.365	70
3100932357D	N06	180	300	192.59	219.35	67	95	78.67	99.04	113.57	359	174.68	2.365	70
3100932358E	N06	180	300	206.79	168.01	77	98	81.62	67.36	113.57	359	174.68	2.365	70
3100932359F	N06	180	300	206.79	168.01	77	98	81.62	67.36	113.57	359	174.68	2.365	70
31009323608	N06	180	300	164.83	168.01	76	98	76.01	67.36	113.57	359	174.68	2.365	70
31009323619	N06	180	300	165.53	181.82	62	93	67.39	73.96	102.64	319	119.63	1.62	70
3100932362A	N06	180	300	192.64	207.09	63	94	79.67	91.1	102.64	319	119.63	1.62	70
3100932363B	N06	180	300	192.64	207.09	63	94	79.67	91.1	102.64	319	119.63	1.62	70
3100932364C	N06	180	300	192.64	207.09	63	94	79.67	91.1	102.64	319	119.63	1.62	70
3100932365D	N06	180	300	192.64	207.09	63	94	79.67	91.1	102.64	319	119.63	1.62	70
3100932366E	N06	180	300	192.64	207.09	63	94	79.67	91.1	102.64	319	119.63	1.62	70
3100932367F	N06	180	300	192.64	207.09	63	94	79.67	91.1	102.64	319	119.63	1.62	70
3100932368G	N06	180	300	192.64	207.09	63	94	79.67	91.1	102.64	319	119.63	1.62	70
3100932369H	N06	180	300	192.64	207.09	63	94	79.67	91.1	102.64	319	119.63	1.62	70
3100932370J	N06	180	300	185.55	200.65	61	90	73.02	76.32	102.64	319	149.38	2.023	70
3100932371K	N06	180	300	185.55	200.65	61	90	73.02	76.32	102.64	319	149.38	2.023	70
3100932372L	N06	180	300	185.55	200.65	61	90	73.02	76.32	102.64	319	149.38	2.023	70
3100932373M	N06	180	300	185.55	200.65	61	90	73.02	76.32	102.64	319	149.38	2.023	70
3100932374N	N06	180	300	185.55	200.65	61	90	73.02	76.32	102.64	319	149.38	2.023	70
3100932375O	N06	180	300	185.55	200.65	61	90	73.02	76.32	102.64	319	149.38	2.023	70
3100932376P	N06	180	300	185.55	200.65	61	90	73.02	76.32	102.64	319	149.38	2.023	70
3100932377Q	N06	180	300	185.55	200.65	61	90	73.02	76.32	102.64	319	149.38	2.023	70
3100932378R	N06	180	300	185.51	193.07	62	102	68.37	81.79	102.64	319	149.38	2.023	70
3100932379S	N06	180	300	185.51	193.07	62	102	68.37	81.79	102.64	319	149.38	2.023	70
3100932380A	N06	180	300	185.51	193.07	62	102	68.37	81.79	102.64	319	149.38	2.023	70
3100932381B	N06	180	300	185.51	193.07	62	102	68.37	81.79	102.64	319	149.38	2.023	70
3100932382C	N06	180	300	185.51	193.07	62	102	68.37	81.79	102.64	319	149.38	2.023	70
3100932383D	N06	180	300	185.51	193.07	62	102	68.37	81.79	102.64	319	149.38	2.023	70
3100932384E	N06	180	300	181.58	199.79	69	97	72.88	79.08	102.64	319	149.38	2.023	70
3100932385F	N06	180	300	181.58	199.79	69	97	72.88	79.08	102.64	319	149.38	2.023	70
3100932386G	N06	180	300	181.58	199.79	69	97	72.88	79.08	102.64	319	149.38	2.023	70
3100932387H	N06	180	300	174.64	196.2	66	94	72.51	79.45	102.64	319	149.38	2.023	70
3100932389N	N06	180	300	174.64	196.2	66	94	72.51	79.45	102.64	319	149.38	2.023	70
3100932390S	N06	180	300	174.64	196.2	66	94	72.51	79.45	102.64	319	149.38	2.023	70
3100932391P	N06	180	300	174.64	196.2	66	94	72.51	79.45	102.64	319	149.38	2.023	70
3100932392S	N06	180	300	174.64	196.2	66	94	72.51	79.45	102.64	319	149.38	2.023	70
3100932383D	N06	180	300	174.64	196.2	66	94	72.51	79.45	102.64	319	149.38	2.023	70
3100932384E	N06	180	300	174.64	196.2	66	94	72.51	79.45	102.64	319	149.38	2.023	70
3100932385F	N06	180	300	174.64	196.2	66	94	72.51	79.45	102.64	319	149.38	2.023	70
3100932386G	N06	180	300	174.64	196.2	66	94	72.51	79.45	102.64	319	149.38	2.023	70
3100932387H	N06	180	300	174.64	196.2	66	94	72.51	79.45	102.64	319	149.38	2.023	70
3100932388J	N06	180	300	174.64	196.2	66	94	72.51	79.45	102.64	319	149.38	2.023	70
3100932389K	N06	180	300	174.64	196.2	66	94	72.51	79.45	102.64	319	149.38	2.023	70
3100932390L	N06	180	300	174.64	196.2	66	94	72.51	79.45	102.64	319	149.38	2.023	70
3100932391M	N06	180	300	174.64	196.2	66	94	72.51	79.45	102.64	319	149.38	2.023	70
3100932392N	N06	180	300	174.64	196.2	66	94	72.51	79.45	102.64	319	149.38	2.023	70
3100932393O	N06	180	300	174.64	196.2	66	94	72.51	79.45	102.64	319	149.38	2.023	70
3100932394P	N06	180	300	174.64	196.2	66	94	72.51	79.45	102.64	319	149.38	2.023	70
3100932395Q	N06	180	300	174.64	196.2	66	94	72.51	79.45	102.64	319	149.38	2.023	70
3100932396R	N06	180	300	174.64	196.2	66	94	72.51	79.45	102.64	319	149.38	2.023	70
3100932397S	N06	180	300	174.64	196.2	66	94	72.51	79.45	102.64	319	149.38	2.023	70
3100932383D	N06	180	300	174.64	196.2	66	94	72.51	79.45	102.64	319	149.38	2.023	70

Product : TerraTex N04.5

ROLL # ASTM METHOD UNITS TARGET	WEIGHT* D5261 oz/sq yd 4.20	MD TENSILE D4632 lbs. 120	MD ELONG D4632 % 50	XMD TENSILE D4632 lbs 120	XMD ELONG D4632 % 50	MD TRAP D4533 lbs. 50	XMD TRAP D4533 lbs 50	PUNCTURE D4833 lbs. 70	AOS D4751 US Sieve 70	WATER FLOW D4491 gpm/ft^2 120	PERMITTIVITY D4491 sec^{-1} 1.80
010294521	4.24	124	58	138	63	55	68	74	70	153	2.05
010294522	4.24	124	58	138	63	55	68	74	70	153	2.05
010294523	4.24	124	58	138	63	55	68	74	70	153	2.05
010294524	4.24	124	58	138	63	55	68	74	70	153	2.05
010294526	4.61	128	64	144	69	55	68	74	70	153	2.05
010294527	4.61	128	64	144	69	55	68	74	70	153	2.05
010294528	4.61	128	64	144	69	55	68	74	70	153	2.05
010294529	4.61	128	64	144	69	55	68	74	70	153	2.05
010294530	4.29	123	55	140	65	60	75	76	70	153	2.05
010294531	4.29	123	55	140	65	60	75	76	70	153	2.05
010294532	4.29	123	55	140	65	60	75	76	70	153	2.05
010294533	4.29	123	55	140	65	60	75	76	70	153	2.05
010294534	4.29	123	55	140	65	60	75	76	70	153	2.05
010294535	4.65	127	61	142	68	60	75	76	70	153	2.05
010294536	4.65	127	61	142	68	60	75	76	70	153	2.05
010294537	4.65	127	61	142	68	60	75	76	70	153	2.05
010294543	4.33	125	57	135	60	53	64	73	70	153	2.05
010294544	4.33	125	57	135	60	53	64	73	70	153	2.05
010294545	4.68	129	63	145	66	53	64	73	70	153	2.05
010294546	4.68	129	63	145	66	53	64	73	70	153	2.05
010294576	4.37	123	59	137	62	57	72	75	70	153	2.05
010294578	4.37	123	59	137	62	57	72	75	70	153	2.05
010294579	4.37	123	59	137	62	57	72	75	70	153	2.05
010294580	4.44	126	65	141	68	55	66	72	70	153	2.05
010294581	4.44	126	65	141	68	55	66	72	70	153	2.05
010294582	4.44	126	65	141	68	55	66	72	70	153	2.05
010294583	4.44	126	65	141	68	55	66	72	70	153	2.05
010294584	4.44	126	65	141	68	55	66	72	70	153	2.05
010294585	4.39	122	56	139	64	55	66	72	70	153	2.05
010294586	4.39	122	56	139	64	55	66	72	70	153	2.05
010294587	4.39	122	56	139	64	55	66	72	70	153	2.05
010294588	4.39	122	56	139	64	55	66	72	70	153	2.05
010294589	4.39	122	56	139	64	55	66	72	70	153	2.05
010294590	4.41	128	62	143	70	59	74	78	70	153	2.05
010294591	4.41	128	62	143	70	59	74	78	70	153	2.05
010294592	4.41	128	62	143	70	59	74	78	70	153	2.05

*Weight is typical. All other values are MARV.

Product : TerraTex N04.5

ROLL # ASTM METHOD UNITS TARGET	WEIGHT* D5261 oz/sq yd 4.20	MD TENSILE D4632 lbs. 120	MD ELONG D4632 % 50	XMD TENSILE D4632 lbs 120	XMD ELONG D4632 % 50	MD TRAP D4533 lbs. 50	XMD TRAP D4533 lbs 50	PUNCTURE D4833 lbs. 70	AOS D4751 US Sieve 70	WATER FLOW D4491 gpm/ft^2 120	PERMITTIVITY D4491 sec^{-1} 1.80
010294593	4.41	128	62	143	70	59	74	78	70	153	2.05
010294594	4.41	128	62	143	70	59	74	78	70	153	2.05
010294595	4.24	124	58	136	61	59	74	78	70	153	2.05
010294596	4.24	124	58	136	61	59	74	78	70	153	2.05
010294597	4.24	124	58	136	61	59	74	78	70	153	2.05
010294598	4.24	124	58	136	61	59	74	78	70	153	2.05
010294599	4.24	124	58	136	61	59	74	78	70	153	2.05
010294600	4.77	130	64	140	67	53	63	74	70	142	1.90
010294601	4.77	130	64	140	67	53	63	74	70	142	1.90
010294602	4.77	130	64	140	67	53	63	74	70	142	1.90
010294603	4.77	130	64	140	67	53	63	74	70	142	1.90
010294613	4.29	123	55	138	63	56	71	80	70	142	1.90
010294614	4.29	123	55	138	63	56	71	80	70	142	1.90
010294615	4.63	127	61	144	69	56	71	80	70	142	1.90
010294616	4.63	127	61	144	69	56	71	80	70	142	1.90
010294617	4.63	127	61	144	69	56	71	80	70	142	1.90
010294618	4.63	127	61	144	69	56	71	80	70	142	1.90
010294619	4.63	127	61	144	69	56	71	80	70	142	1.90
010294620	4.31	125	57	135	65	52	65	73	70	142	1.90
010294621	4.31	125	57	135	65	52	65	73	70	142	1.90
010294622	4.31	125	57	135	65	52	65	73	70	142	1.90
010294623	4.31	125	57	135	65	52	65	73	70	142	1.90
010294624	4.31	125	57	135	65	52	65	73	70	142	1.90
010294625	4.66	129	63	141	67	52	65	73	70	142	1.90
010294626	4.66	129	63	141	67	52	65	73	70	142	1.90
010294628	4.66	129	63	141	67	52	65	73	70	142	1.90
010294629	4.66	129	63	141	67	52	65	73	70	142	1.90
010294630	4.26	124	59	137	62	58	75	77	70	142	1.90
010294633	4.26	124	59	137	62	58	75	77	70	142	1.90
010294634	4.26	124	59	137	62	58	75	77	70	142	1.90
010294635	4.45	126	65	143	70	58	75	77	70	142	1.90
010294636	4.45	126	65	143	70	58	75	77	70	142	1.90
010294637	4.45	126	65	143	70	58	75	77	70	142	1.90
010294638	4.45	126	65	143	70	58	75	77	70	142	1.90
010294639	4.45	126	65	143	70	58	75	77	70	142	1.90
010294640	4.29	130	56	139	64	54	68	75	70	142	1.90

*W : is typical. All other values are MARV.

GEOSYNTHETICS INVENTORY LOG
TYPE GT-S GEOTEXTILE

Project Name: Johnston County C&DLF - Area 1 Closure
Project Number: JOHNSTON-09-5
Contractor: ES&J Enterprises
Storage Area: West of Area 1
Geosynthetics Installer: Hallaton
Inventory Monitor(s): BSH

Geosynthetic Material Type: Type GT-S Geotextile
Geosynthetic Product Identification:

Material		Material Dimensions		MQC Information?	CQA Conformance Sample No.	Remarks
Roll No.	Batch/Lot No.	Length (Feet)	Width (Feet)			
31009323448	26072	300	15	Y		
3100932349D	26072	300	15	Y		
31009323459	26072	300	15	Y	L10096-06-02	PASS
31009323528	26072	300	15	Y	L10096-06-03	PASS
3100932347B	26072	300	15	Y		
31009323506	26072	300	15	Y		
3100932355B	26072	300	15	Y		
3100932356C	26072	300	15	Y		
3100932358E	26072	300	15	Y		
31009323517	26072	300	15	Y		
3100932348C	26072	300	15	Y		
31009323539	26072	300	15	Y		
3100932359F	26072	300	15	Y		
3100932346A	26072	300	15	Y		
3100932354A	26072	300	15	Y		
3100932357D	26072	300	15	Y		
31009323608	26072	300	15	Y		
31009323619	26072	300	15	Y		
3100932362A	26072	300	15	Y		
3100932363B	26072	300	15	Y		

Totals:

Total Rolls: 20
Total Lots: 1
Total SF: 90,000

GEOSYNTHETICS INVENTORY LOG
TYPE GT-T GEOTEXTILE

Project Name: Johnston County C&DLF - Area 1 Closure
Project Number: JOHNSTON-09-5
Contractor: ES&J Enterprises
Storage Area: West of Area 1
Geosynthetics Installer: Hallaton
Inventory Monitor(s): BSH

Geosynthetic Material Type: Type GT-T Geotextile
Geosynthetic Product Identification:

Material		Material Dimensions		MQC	CQA	
Roll No.	Batch/Lot No.	Length (Feet)	Width (Feet)	Information?	Conformance Sample No.	Remarks
010294578	N/A	15	300	Y	L10096-06-01	PASS
010294622	N/A	15	300	Y		
010294623	N/A	15	300	Y		
010294624	N/A	15	300	Y		

Totals:

Total Rolls: 4
Total Lots: 1
Total SF: 18,000

CONFORMANCE TEST RESULTS

Geotechnics
INTEGRITY IN TESTING

CLIENT: RICHARDSON SMITH GARDNER & ASSOCIATES, IN
CLIENT PROJECT: JOHNSTON COUNTY LANDFILL
PROJECT NO.: L10096-06
LAB ID NO.: L10096-06-01
MATERIAL: GT-T 4 OZ GEOTEXTILE
ROLL NO: 010294578

TEST	ASTM METHOD	UNITS	SPECIMEN NO. 1	2	3	4	5	6	7	8	9	10	AVG	STD
GRAB STRENGTH	D 4632	MD-lbs	106.0	128.5	105.6	89.1	111.7	96.9	124.1	178.5	110.6	119.7	**117.1**	**24.66**
		CD-lbs	119.9	101.3	124.3	142.3	116.4	119.5	144.3	117.6	131.9	125.7	**124.3**	**12.75**
GRAB ELONGATION	D 4632	MD-%	86.7	93.3	86.7	86.7	90.0	80.0	90.0	83.3	80.0	83.3	**86.0**	**4.39**
		CD-%	100.0	96.7	96.7	96.7	86.7	83.3	86.7	90.0	100.0	110.0	**94.7**	**8.04**
TRAPEZOIDAL TEAR	D 4533	MD-lbs	79.0	76.0	54.6	71.3	50.6	52.3	55.9	64.7	50.0	53.7	**60.8**	**11.02**
		CD-lbs	70.7	58.3	56.5	70.0	93.6	77.4	73.6	59.0	52.8	58.5	**67.0**	**12.50**
PUNCTURE	D 4833	lbs	60.1	56.3	74.3	58.7	47.3	71.3	70.9	64.9	47.8	91.7		
		lbs	66.4	59.3	84.9	71.0	68.1						**66.2**	**12.18**
A.O.S.	D 4751	mm	0.149	0.146	0.179	0.189	0.169						**0.166**	
								AVERAGE AOS, US STD.SIEVE SIZE =					**#80**	

CHECKED BY: BF DATE: 12-2-10

\\GEOSERVER\Data Drive\Synthetics\2010 SYNTHETICS\096 - RSGA - JOHNSTON COUNTY LANDFILL\[L10096-06-01 TEXTILE JOHNSTON COUNTY LF.xls]TEXT

L10096-06-01

12/2/2010

APPARENT OPENING SIZE
ASTM D 4751

Geotechnics
INTEGRITY IN TESTING

CLIENT: RICHARDSON SMITH GARDNER & ASSOCIATES, INC.
CLIENT PROJECT: JOHNSTON COUNTY LANDFILL PROJECT NO.: L10096-06
MATERIAL: GT-T 4 OZ GEOTEXTILE LAB ID NO.: L10096-06-01
ROLL NO: 010294578

US STD. SIEVE SIZE	SIEVE OPENING (mm)	WT. FRAME & GEOTEXTILE & BEADS (gm)	WT. FRAME & GEOTEXTILE (gm)	WT. BEADS (gm)	WT. PAN & BEADS (gm)	WT. PAN (gm)	WT. BEADS PASSING (gm)	PERCENT PASSING (%)	AOS @ 5% PASSING (mm)
SPECIMEN 1									
#140	0.106	1162.22	1112.22	50.00	426.54	385.14	41.40	82.80	
#100	0.150	1162.20	1112.20	50.00	386.68	385.14	1.54	3.08	
									0.149
SPECIMEN 2									
#140	0.106	820.12	770.12	50.00	561.01	532.05	28.96	57.92	
#100	0.150	820.09	770.09	50.00	532.29	532.05	0.24	0.48	
									0.146
SPECIMEN 3									
#100	0.150	824.78	774.78	50.00	531.88	527.01	4.87	9.74	
#70	0.212	824.74	774.74	50.00	527.18	527.01	0.17	0.34	
									0.179
SPECIMEN 4									
#100	0.150	814.38	764.38	50.00	531.95	525.15	6.80	13.60	
#70	0.212	814.36	764.36	50.00	525.49	525.15	0.34	0.68	
									0.189
SPECIMEN 5									
#100	0.150	819.32	769.32	50.00	531.11	527.27	3.84	7.68	
#70	0.212	819.28	769.28	50.00	527.28	527.27	0.01	0.02	
									0.169

AVERAGE AOS @ 5% PASSING, mm 0.166
AVERAGE AOS, US STD. SIEVE SIZE **#80**

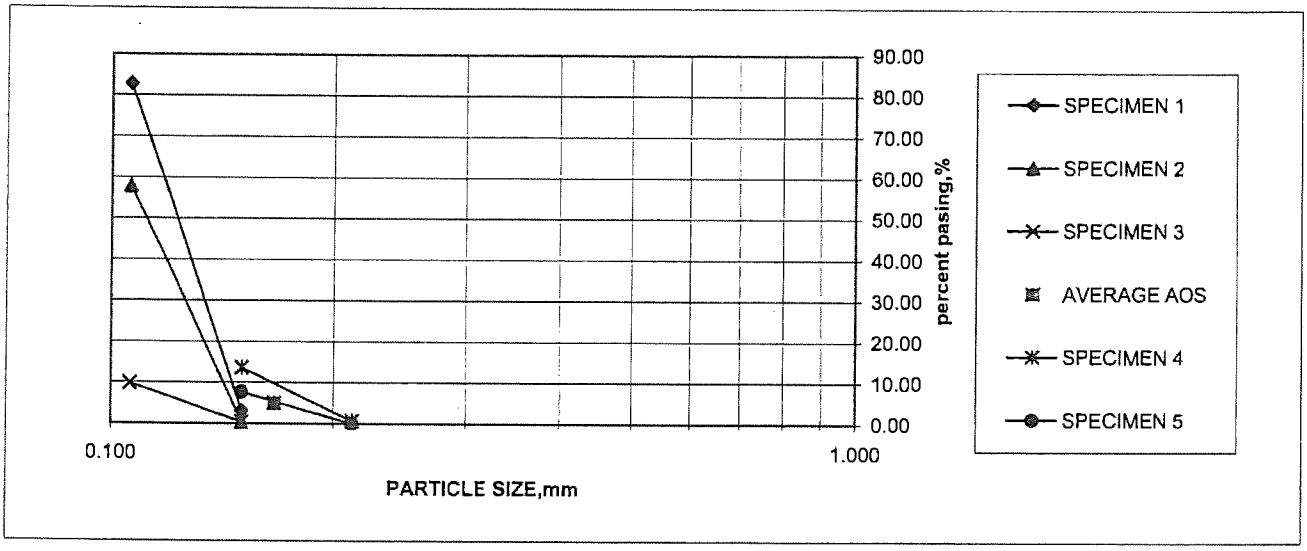

Checked By: BF DATE: 12-2-10

\\GEOSERVER\Data Drive\Synthetics\2010 SYNTHETICS\096 - RSGA - JOHNSTON COUNTY LANDFILL\[L10096-06-01 TEXTILE JOHNSTON COUNT L10096-06-01 12/2/2010

CONFORMANCE TEST RESULTS

geotechnics
INTEGRITY IN TESTING

CLIENT: RICHARDSON SMITH GARDNER & ASSOCIATES, IN
CLIENT PROJECT: JOHNSTON COUNTY LANDFILL
PROJECT NO.: L10096-06
LAB ID NO.: L10096-06-02
MATERIAL: GT-S 6 OZ GEOTEXTILE
ROLL NO: 3531009323459

TEST	ASTM METHOD	UNITS	SPECIMEN NO. 1	2	3	4	5	6	7	8	9	10	AVG	STD
GRAB STRENGTH	D 4632	MD-lbs	184.2	183.7	163.7	161.3	195.6	207.6	187.7	239.7	207.8	222.2	**195.4**	**24.66**
		CD-lbs	188.0	207.7	177.8	174.6	212.6	223.0	281.6	250.1	229.9	215.9	**216.1**	**32.91**
GRAB ELONGATION	D 4632	MD-%	86.7	93.3	90.0	86.7	93.3	93.3	86.7	100.0	93.3	96.7	**92.0**	**4.50**
		CD-%	123.3	113.3	113.3	106.7	113.3	110.0	120.0	113.3	116.7	126.7	**115.7**	**6.10**
TRAPEZOIDAL TEAR	D 4533	MD-lbs	132.1	87.6	99.3	116.8	115.2	88.9	98.7	78.8	87.0	100.0	**100.4**	**16.46**
		CD-lbs	133.0	126.7	173.9	117.0	118.5	137.8	96.6	91.2	120.3	174.3	**128.9**	**27.84**
PUNCTURE	D 4833	lbs	66.9	54.1	75.0	85.7	110.0	110.6	117.4	90.3	116.1	94.7		
		lbs	94.9	116.7	111.1	115.5	87.6						**96.4**	**19.93**
A.O.S.	D 4751	mm	0.144	0.143	0.110	0.159	0.146						**0.140**	
								AVERAGE AOS, US STD.SIEVE SIZE =					**#100**	

CHECKED BY: BF DATE: 12-1-10

544 Braddock Avenue • East Pittsburgh, PA 15112 • 412-823-7600 • FAX 412-823-8999 • www.geotechnics.net

APPARENT OPENING SIZE
ASTM D 4751

Geotechnics
INTEGRITY IN TESTING

CLIENT: RICHARDSON SMITH GARDNER & ASSOCIATES, INC.
CLIENT PROJECT: JOHNSTON COUNTY LANDFILL PROJECT NO.: L10096-06
MATERIAL: GT-S 6 OZ GEOTEXTILE LAB ID NO.: L10096-06-02
ROLL NO: 3531009323459

US STD. SIEVE SIZE	SIEVE OPENING (mm)	WT. FRAME & GEOTEXTILE & BEADS (gm)	WT. FRAME & GEOTEXTILE (gm)	WT. BEADS (gm)	WT. PAN & BEADS (gm)	WT. PAN (gm)	WT. BEADS PASSING (gm)	PERCENT PASSING (%)	AOS @ 5% PASSING (mm)
SPECIMEN 1									
#140	0.106	1163.59	1113.59	50.00	402.59	385.14	17.45	34.90	
#100	0.150	1163.58	1113.58	50.00	385.47	385.14	0.33	0.66	
									0.144
SPECIMEN 2									
#140	0.106	820.84	770.84	50.00	548.78	532.05	16.73	33.46	
#100	0.150	820.80	770.80	50.00	532.28	532.05	0.23	0.46	
									0.143
SPECIMEN 3									
#140	0.106	827.44	777.44	50.00	529.82	527.01	2.81	5.62	
#100	0.150	827.42	777.42	50.00	527.05	527.01	0.04	0.08	
									0.110
SPECIMEN 4									
#100	0.150	815.92	765.92	50.00	528.17	525.15	3.02	6.04	
#70	0.212	816.00	766.00	50.00	525.16	525.15	0.01	0.02	
									0.159
SPECIMEN 5									
#140	0.106	820.95	770.95	50.00	551.89	527.27	24.62	49.24	
#100	0.150	820.92	770.92	50.00	527.85	527.27	0.58	1.16	
									0.146

AVERAGE AOS @ 5% PASSING, mm 0.140
AVERAGE AOS, US STD. SIEVE SIZE **#100**

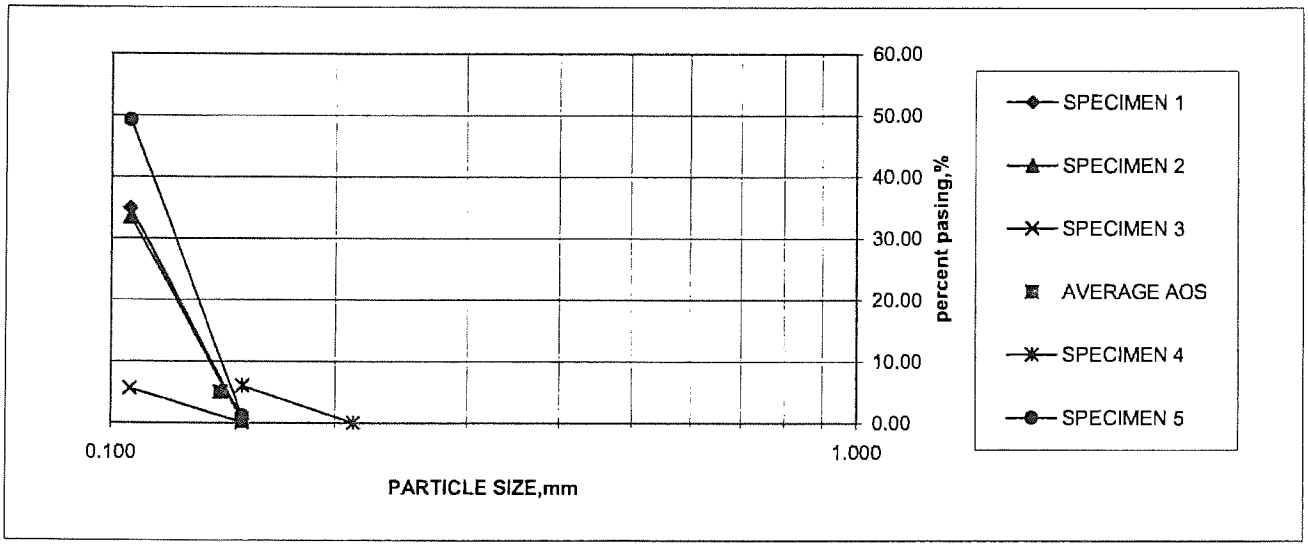

Checked By: BF DATE: 12-1-10

\\GEOSERVER\Data Drive\Synthetics\2010 SYNTHETICS\096 - RSGA - JOHNSTON COUNTY LANDFILL\[L10096-06-02 TEXTILE JOHNSTON COUNT L10096-06-02 12/1/2010

CONFORMANCE TEST RESULTS

Geotechnics
INTEGRITY IN TESTING

CLIENT: RICHARDSON SMITH GARDNER & ASSOCIATES, IN
CLIENT PROJECT: JOHNSTON COUNTY LANDFILL
PROJECT NO.: L10096-06
LAB ID NO.: L10096-06-03
MATERIAL: GT-S 6 OZ GEOTEXTILE
ROLL NO: 3531009323528

TEST	ASTM METHOD	UNITS	SPECIMEN NO. 1	2	3	4	5	6	7	8	9	10	AVG	STD
GRAB STRENGTH	D 4632	MD-lbs	273.9	224.4	210.9	209.5	224.4	224.3	164.6	197.6	184.4	235.5	**215.0**	**29.78**
		CD-lbs	196.9	248.6	256.7	250.0	238.8	268.0	232.2	211.9	192.5	179.6	**227.5**	**30.36**
GRAB ELONGATION	D 4632	MD-%	90.0	93.3	90.0	86.7	93.3	93.3	86.7	96.7	93.3	93.3	**91.7**	**3.24**
		CD-%	133.3	110.0	113.3	110.0	113.3	116.7	113.3	110.0	110.0	116.7	**114.7**	**7.06**
TRAPEZOIDAL TEAR	D 4533	MD-lbs	130.7	86.3	84.1	94.8	134.5	98.7	91.5	83.9	109.7	115.8	**103.0**	**18.82**
		CD-lbs	138.2	97.7	113.7	100.4	148.8	106.7	112.6	124.1	103.8	116.7	**116.3**	**16.55**
PUNCTURE	D 4833	lbs	136.9	114.6	114.7	110.6	98.9	120.1	96.7	128.0	96.7	90.7		
		lbs	99.2	87.1	83.2	96.8	106.2						**105.4**	**15.28**
A.O.S.	D 4751	mm	0.128	0.134	0.142	0.149	0.139						**0.138**	
								AVERAGE AOS, US STD.SIEVE SIZE =					**#100**	

CHECKED BY: BF DATE: 12-1-10

544 Braddock Avenue • East Pittsburgh, PA 15112 • 412-823-7600 • FAX 412-823-8999 • www.geotechnics.net

APPARENT OPENING SIZE
ASTM D 4751

geotechnics
INTEGRITY IN TESTING

CLIENT: RICHARDSON SMITH GARDNER & ASSOCIATES, INC.
CLIENT PROJECT: JOHNSTON COUNTY LANDFILL PROJECT NO.: L10096-06
MATERIAL: GT-S 6 OZ GEOTEXTILE LAB ID NO.: L10096-06-03
ROLL NO: 3531009323528

US STD. SIEVE SIZE	SIEVE OPENING (mm)	WT. FRAME & GEOTEXTILE & BEADS (gm)	WT. FRAME & GEOTEXTILE (gm)	WT. BEADS (gm)	WT. PAN & BEADS (gm)	WT. PAN (gm)	WT. BEADS PASSING (gm)	PERCENT PASSING (%)	AOS @ 5% PASSING (mm)
SPECIMEN 1									
#140	0.106	1164.26	1114.26	50.00	390.68	385.14	5.54	11.08	
#100	0.150	1164.25	1114.25	50.00	385.17	385.14	0.03	0.06	
									0.128
SPECIMEN 2									
#140	0.106	821.44	771.44	50.00	539.77	532.05	7.72	15.44	
#100	0.150	821.36	771.36	50.00	532.07	532.05	0.02	0.04	
									0.134
SPECIMEN 3									
#140	0.106	826.72	776.72	50.00	538.33	527.01	11.32	22.64	
#100	0.150	826.66	776.66	50.00	527.77	527.01	0.76	1.52	
									0.142
SPECIMEN 4									
#140	0.106	816.28	766.28	50.00	541.57	525.15	16.42	32.84	
#100	0.150	816.16	766.16	50.00	527.24	525.15	2.09	4.18	
									0.149
SPECIMEN 5									
#140	0.106	820.95	770.95	50.00	538.59	527.27	11.32	22.64	
#100	0.150	820.92	770.92	50.00	527.34	527.27	0.07	0.14	
									0.139

AVERAGE AOS @ 5% PASSING, mm 0.138
AVERAGE AOS, US STD. SIEVE SIZE **#100**

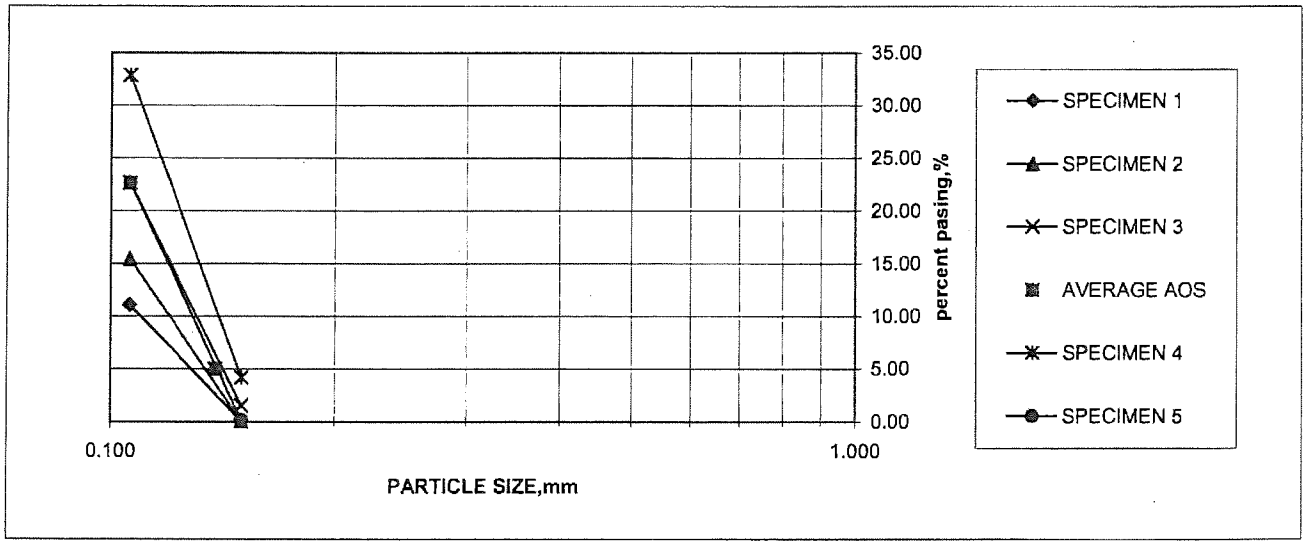

Checked By: BF DATE: 12-1-10

\\GEOSERVER\Data Drive\Synthetics\2010 SYNTHETICS\096 - RSGA - JOHNSTON COUNTY LANDFILL\[L10096-06-02 TEXTILE JOHNSTON COUNT L10096-06-03 12/1/2010

Appendix J

Record Drawings

1. **2009 Geomembrane As-Built (Partial Closure)**
2. **2010 Geomembrane As-Built**
3. **As-Built Topographic Survey**

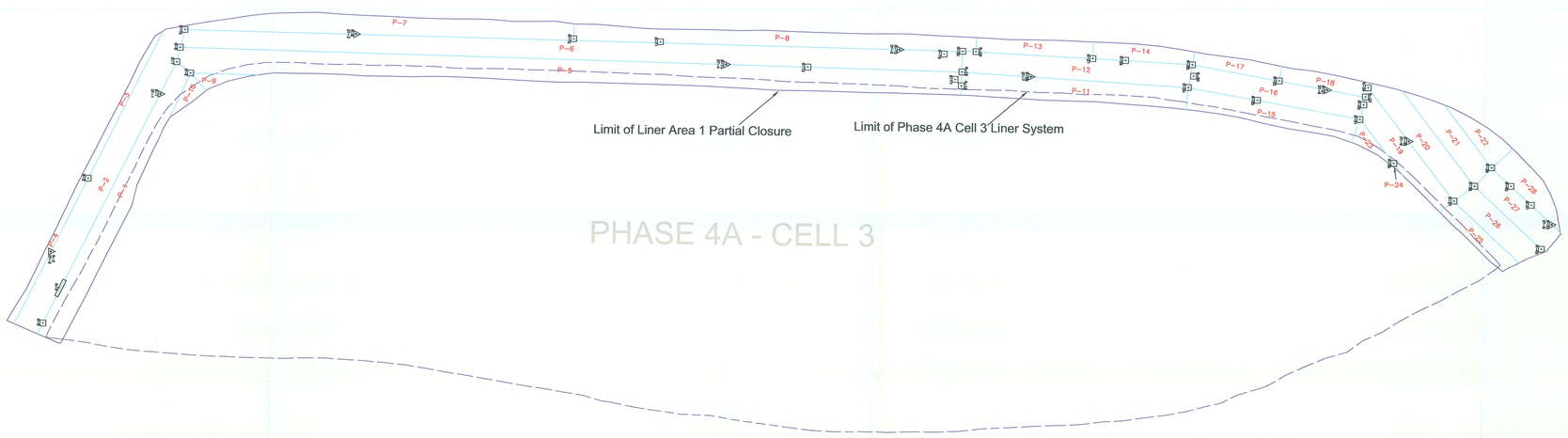

= Limit of Liner

= Liner Panel Seams

P–00 = Liner Panel Numbers

= Destructive Test Location

= Liner Repair Location

*This is not a Surveyed As-Built
Drawing is for Reference Only

NO.	Date.	By:	Description.

REVISIONS

JOHNSTON CO. LANDFILL
AREA 1 PARTIAL CLOSURE
SMITHFIELD, NC

40 mil LLDPE Geomembrane As-Built Drawing

Hallaton, Inc.
Containment Linings
1206 Sparks Road - Sparks, MD 21152
(410) 583-7700 - (410) 583-7720 Fax

Drawn by:	KHG
Date:	6/19/09
Scale:	1" = 60'
Job Number:	0901-20008
Drawing Number:	004

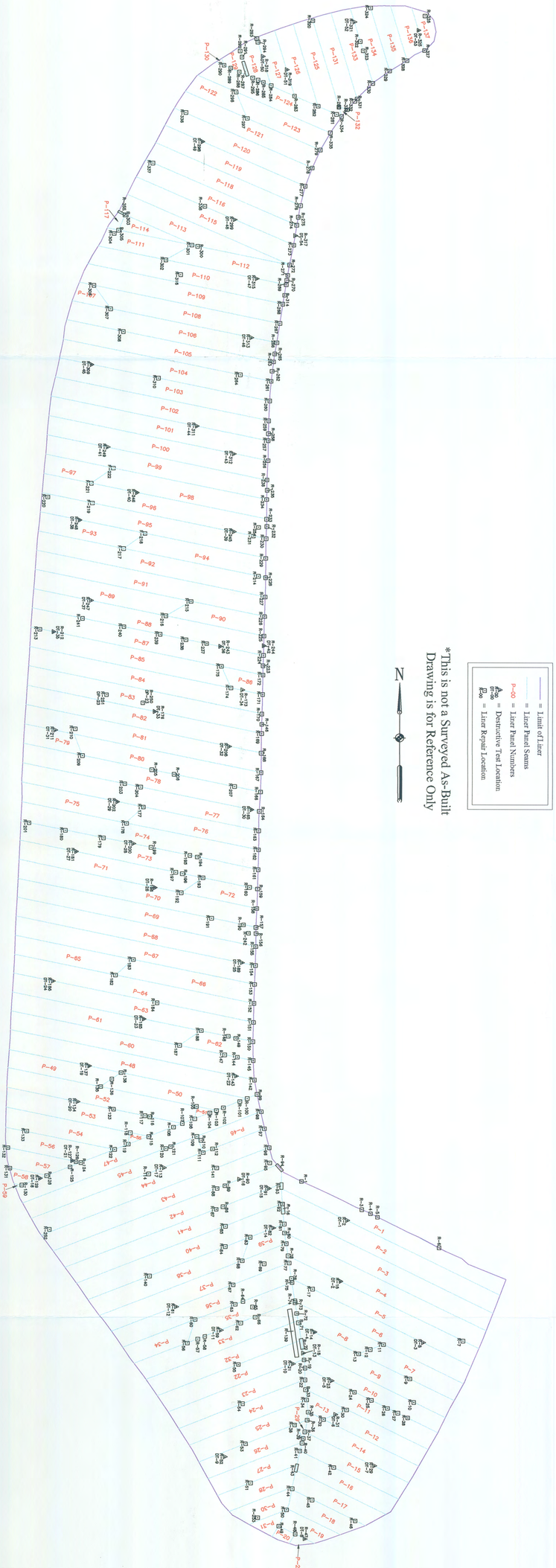

Drawing Number:	002
Job Number:	1043-16310
Scale:	1" = 60'
Date:	12/1/10
Drawn by:	KHG

Hallaton, Inc.
Containment Linings
1206 Sparks Road - Sparks, MD 21152
(410) 583-7700 - (410) 583-7720 Fax

JOHNSTON CO. C&D LANDFILL
AREA 1 CLOSURE
SMITHFIELD, NC

Geomembrane Record Drawing

REVISIONS

NO.	Date.	By.	Description.
A	1/24/11	KHG	Corrections made to drawing after RSG review and comments

SITE DATUM

I, JIMMY HOLLAND JR., CERTIFY THAT THIS SURVEY IS OF ANOTHER CATEGORY, SUCH AS THE RECOMBINATION OF EXISTING PARCELS, A COURT-ORDERED SURVEY, OR OTHER EXCEPTION TO THE DEFINITION OF SUBDIVISION.

PROFESSIONAL LAND SURVEYOR – L-3908

I, JIMMY HOLLAND JR., CERTIFY THAT THIS MAP WAS DRAWN UNDER MY SUPERVISION FROM AN ACTUAL SURVEY MADE UNDER MY SUPERVISION. WITNESS MY HAND AND SEAL THIS 13 DAY OF SEPTEMBER, A.D., 2011.

PROFESSIONAL LAND SURVEYOR – L-3908

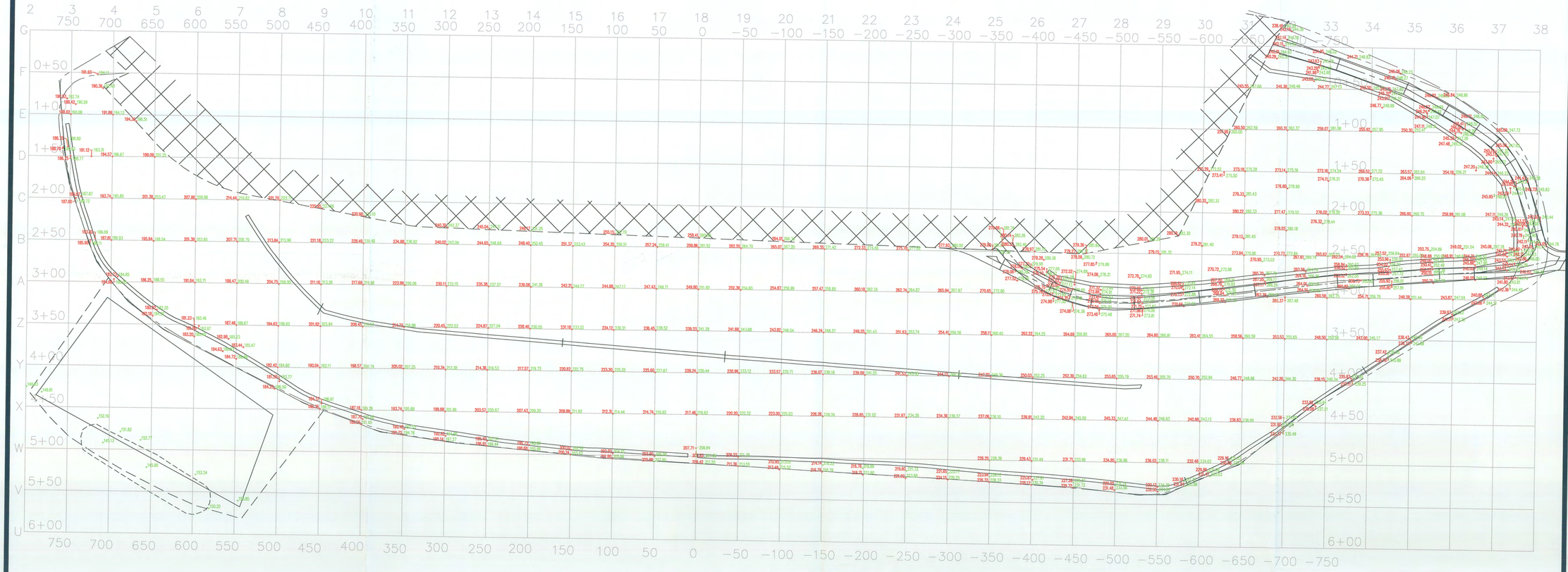

LEGEND

216.53 PROTECTIVE COVER ELEVATION
214.24 SUBGRADE ELEVATION
——— DESIGNED LINER LIMITS

NOTES:
1) ALL DISTANCES SHOWN ARE HORIZONTAL GROUND DISTANCES MEASUREMENTS
2) THIS SKETCH WAS DRAWN FROM AN ACTUAL GPS SURVEY MADE UNDER MY DIRECT SUPERVISION. I USED REALTIME KINEMATIC GPS FIELD PROCEDURES WITH NO ADJUSTMENTS. THE SURVEY WAS PERFORMED WITH A TRIMBLE GLOBAL POSITIONING SYSTEM USING (2) RECEIVERS. ALL COORDINATES AND ELEVATIONS ARE BASED ON CONTROL POINTS ESTABLISHED BY DENNIS LEE, PLS PRIOR TO CONSTRUCTION
3) LOCATIONS OF ALL UNDERGROUND UTILITIES LYING WITHIN THIS MAPPED AREA MAY NOT BE SHOWN ON THIS SKETCH. DEVELOPERS OR CONTRACTORS SHOULD NOT ONLY MAKE SUBSURFACE INVESTIGATIONS BUT SHOULD ALSO ALLOW FOR CONTINGENCIES WHICH MIGHT ARISE BY REASON OF ENCOUNTERING UNRECORDED LINES OR OF LINES BEING IN DIFFERENT LOCATIONS THAN INDICATED ON THE PLANS.
4) THIS SKETCH IS ONLY INTENDED TO BE USED TO ILLUSTRATE THE AS-BUILT ELEVATIONS OF THE SUBGRADE AND PROTECTIVE COVER MATERIALS.

GRAPHIC SCALE

60 0 30 60 120 240

(IN FEET)
1 inch = 60 ft.

409 Chicago Drive - Suite 12
Fayetteville, North Carolina 28306
Phone (910) 426-6777
Fax (910) 426-5777
License Number C-2554

4D SITE SOLUTIONS, INC
ENGINEERING SURVEYING GPS CONSTRUCTION LAYOUT

NORTH CAROLINA PROFESSIONAL SEAL L-3908 LAND SURVEYOR JIMMY HOLLAND JR.

9-13-11

REVISIONS

PROJECT NAME

JOHNSTON COUNTY C&D LANDFILL AREA 1 AS-BUILT

JOHNSTON COUNTY
NORTH CAROLINA

CLIENT

ES&J ENTERPRISES, INC.

1555 Holland Road
Autryville, North Carolina 28318
Phone: 910-567-6138
Fax: 910-567-2891

PROJECT INFORMATION

SURVEYED BY:	BOBBY
DRAWN BY:	JUSTIN / WES
CHECKED BY:	JIMMY
PROJECT NUMBER:	545

DRAWING SCALE

HORIZONTAL: 1"=60'

DATE SURVEYED

MARCH 17, 2011

SHEET NUMBER

C-1

OF 1