RECYCLE CAROLINA

April 28, 2015

Mr. Larry Frost

NC Division of Waste Management

Solid Waste- Permitting Branch

2090 US Highway 70

Swannanoa, North Carolina 28778

Fac/Perm/Co ID #	Date	Doc ID#
3616	5/2/15	24296

RECEIVED

APR 29 2015

SOLID WASTE SECTION
ASHEVILLE REGIONAL OFFICE

APPROVED DOCUMENT
Division of Waste Management
Solid Waste Section
Date May 28, 2015 By

LYF Frost

Digitally signed by LYF
DN: cn=LYF, o=DWM, ou=SWS, email=larry.frost@ncdenr.gov, c=US
Date: 2015.05.28 15:00:47 -04'00'

Re: Amendment to Operation Plan

Permit No. 3616-TRANSFER- 2013 Recycle Carolina

Dear, Mr. Frost,

In accordance with the rules of your agency, we would like to advise you of our intent to amend our site plan. We intend to install a concrete pad with drainage on the grounds of our facility for the purpose of expanding our capabilities and to better handle the clean processing of incoming recyclable materials. This pad will reduce contamination from dirt and prevent water seepage from moisture on the ground. The concrete pad will measure 100 X 150 and be situated approximately 30 feet from the existing building.

We anticipate installation of the pad in July 2015, if not sooner, in late June, pending favorable weather conditions.

Dale Meyer, past Director of General Services of Burke County has been assisting my company FFD, II, LLC in moving this project to this developmental stage. We employed West and Associates, out of Morganton, NC to produce the drawings. They in addition, have spoken with local authorities, to ensure we are meeting all the requirements per the town of Mt. Holly for zoning and environmental requirements.
We welcome your comments and suggestions and appreciate your continued guidance in this matter.

Respectfully,
Carole McLeod, Owner

FFD, II, LLC.

ADVANTAGE WASTE RECYCLING & DISPOSAL, INC.

Cc: Dale Meyer

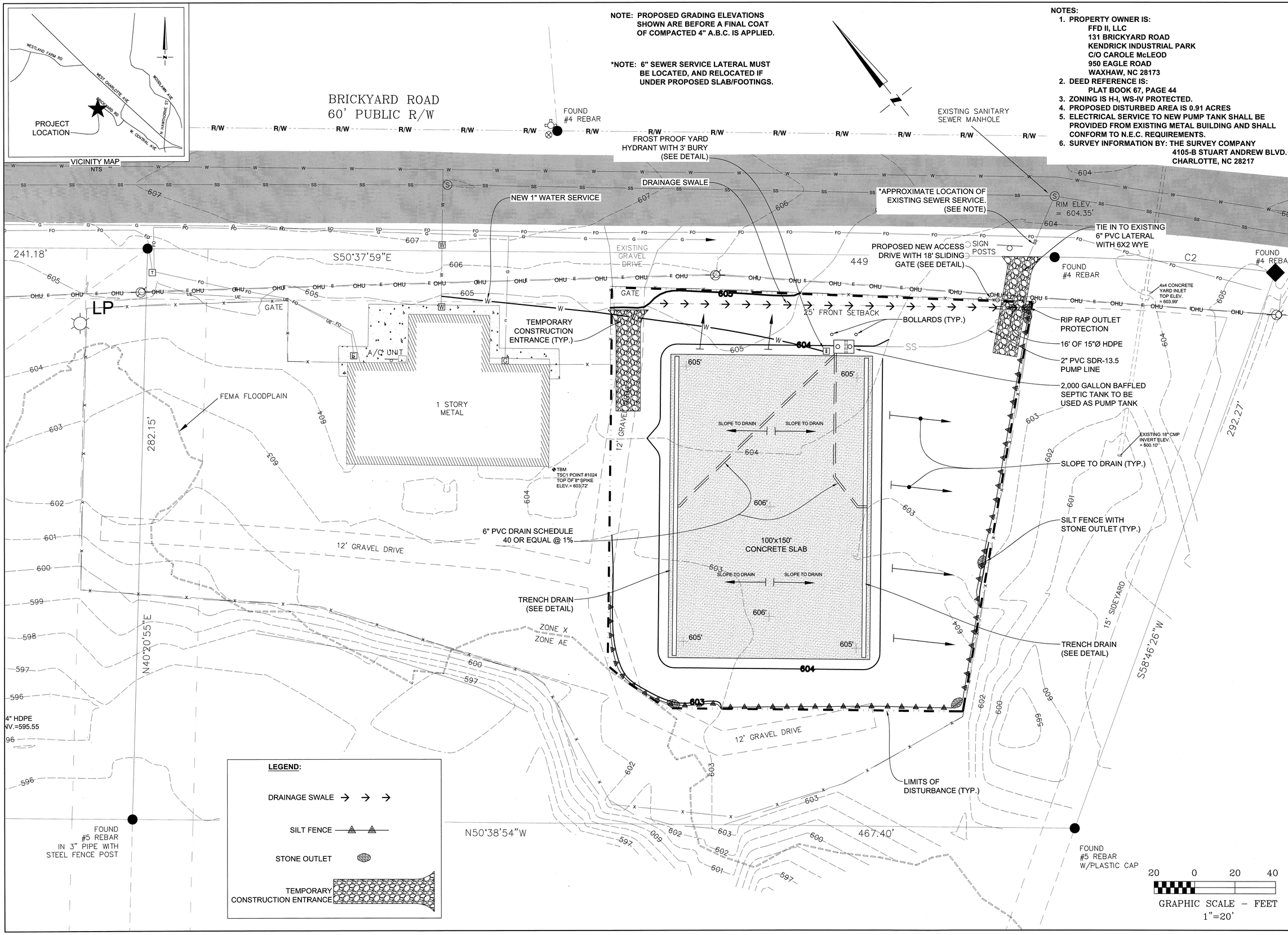

NOTE: PROPOSED GRADING ELEVATIONS SHOWN ARE BEFORE A FINAL COAT OF COMPACTED 4" A.B.C. IS APPLIED.

*NOTE: 6" SEWER SERVICE LATERAL MUST BE LOCATED, AND RELOCATED IF UNDER PROPOSED SLAB/FOOTINGS.

NOTES:
1. PROPERTY OWNER IS:
   FFD II, LLC
   131 BRICKYARD ROAD
   KENDRICK INDUSTRIAL PARK
   C/O CAROLE McLEOD
   950 EAGLE ROAD
   WAXHAW, NC 28173
2. DEED REFERENCE IS:
   PLAT BOOK 67, PAGE 44
3. ZONING IS H-I, WS-IV PROTECTED.
4. PROPOSED DISTURBED AREA IS 0.91 ACRES
5. ELECTRICAL SERVICE TO NEW PUMP TANK SHALL BE PROVIDED FROM EXISTING METAL BUILDING AND SHALL CONFORM TO N.E.C. REQUIREMENTS.
6. SURVEY INFORMATION BY: THE SURVEY COMPANY
   4105-B STUART ANDREW BLVD.
   CHARLOTTE, NC 28217

WEST CONSULTANTS PLLC
405 South Sterling Street
Morganton, NC 28655
(828) 433-5661

NORTH CAROLINA PROFESSIONAL SEAL 27780 ENGINEER DAVIDW. POOL

PLAN

PROJECT NO.: 15022
SCALE: 1"=20'
DATE: 4-15-2015
DRAWN BY:
REVISION:

FFD II, LLC
SITE PLAN FOR PROPOSED WORK AREA & CONCRETE SLAB FOR RECYCLING OPERATION
GASTON COUNTY, NORTH CAROLINA

SHEET
1 OF 3

GENERAL NOTES:

REINFORCED CONCRETE - CONCRETE CONSTRUCTION

A. CONCRETE PROPORTIONING AND MIXING

ALL CONCRETE SHALL BE EQUIVALENT TO READY MIX CONCRETE MANUFACTURED AND DELIVERED IN ACCORDANCE WITH THE REQUIREMENTS OF ASTM DESIGNATION C 94-LATEST REVISION AND HAVING A COMPRESSIVE STRENGTH AT 28 DAYS OF 5,000 PSI, EXCEPT AS NOTED HEREIN. THE CONCRETE MANUFACTURER SHALL ASSUME THE RESPONSIBILITY OF THE DESIGN OF THE CONCRETE MIX IN ACCORDANCE ASTM C-94. AIR ENTRAINED CONCRETE SHALL BE USED FOR ALL CONCRETE EXPOSED TO THE ELEMENTS. CONCRETE MIX DESIGN SHALL BE SUBMITTED TO THE ENGINEER FOR APPROVAL PRIOR TO CONSTRUCTION. CEMENT SHALL BE TYPE 1 OR TYPE 1A "PORTLAND" CEMENT CONFORMING TO ASTM C 150-LATEST REVISION OR ASTM C 175-LATEST REVISION RESPECTIVELY. AGGREGATES SHALL CONFORM TO ASTM C 33-LATEST REVISION. COARSE AGGREGATE SHALL BE CRUSHED ROCK OR GRAVEL AND GRADED FROM ¾" TO #4 SIEVE FOR WALLS AND SLABS AND FROM 2" TO #4 SIEVE FOR MASS OR FOUNDATION CONCRETE. FINE AGGREGATE SHALL BE NATURAL SAND. MIXING WATER SHALL BE PROPORTIONED SO THAT THE SLUMP WHEN MEASURED WITH STANDARD SLUMP CONE DOES NOT EXCEED THE FOLLOWING: SLABS IN GRADE MAX. 4", MIN. 3"; FOOTINGS MAX. 5", MIN. 3"; ALL OTHERS MAX. 6", MIN. 3"

B. REINFORCEMENT

STEEL REINFORCEMENT BARS SHOULD CONFORM TO STANDARD SPECIFICATIONS FOR DEFORMED AND PLAIN BILLET-STEEL BARS FOR CONCRETE REINFORCEMENT ASTM A 615, GRADE 60. BARS SHOULD BE ACCURATELY POSITIONED, TERMINATING 2" AWAY FROM EDGES AND JOINTS, AND SHOULD BE ADEQUATELY SUPPORTED BY CHAIRS TO PREVENT BAR SUPPORTS FROM SINKING INTO THE SUB-BASE. BARS SHOULD BE LAPPED AT 18" AND SHOULD ALSO BE SECURELY TIED OR OTHERWISE SECURED SO THAT THERE IS NO POSSIBILITY OF DISPLACEMENT WHEN CONCRETE IS PLACED. SPLICES IN REINFORCING NOT OTHERWISE SHOWN AND DETAILED SHALL BE IN ACCORDANCE WITH ACI 318. AT THE TIME OF CONCRETE PLACEMENT, REINFORCEMENT SHOULD BE FREE OF LOOSE, FLAKY RUST AND OTHER COATINGS OR FILMS THAT COULD INTERFERE WITH BONDING TO THE CONCRETE. HOOKS AND BENDS IN REINFORCING SHALL BE FABRICATED IN ACCORDANCE WITH ACI 318. ALL BARS SHALL BE BENT COLD. BARS SHALL NOT BE BENT OR STRAIGHTENED IN A MANNER THAT WILL INJURE THE MATERIAL. BARS WITH KINKS, CRACKS, OR IMPROPER BENDS WILL BE REJECTED.

TACK WELDING OF BARS WILL NOT BE PERMITTED. BARS SHALL BE FASTENED TOGETHER WITH ANNEALED WIRE OF NOT LESS THAN 18 GAUGE OR OTHER APPROVED METHOD. METAL CHAIRS, METAL HANGERS, METAL SPACERS AND CONCRETE CHAIRS MAY BE USED TO SUPPORT THE REINFORCEMENT. METAL HANGERS, SPACERS, AND TIES SHALL BE PLACED IN SUCH MANNER THAT THEY WILL NOT BE EXPOSED IN THE FINISHED CONCRETE SURFACE. THE LEGS OF METAL CHAIRS THAT MAY BE EXPOSED AT THE LOWER FACE OF SLABS OR BEAMS SHALL BE GALVANIZED. PRECAST CONCRETE CHAIRS SHALL BE MANUFACTURED OF THE SAME CLASS OF CONCRETE AS THAT SPECIFIED FOR THE STRUCTURE AND SHALL HAVE TIE WIRES SECURELY ANCHORED IN THE CHAIR OR A V-SHAPED GROOVE AT LEAST ¾ INCH IN DEPTH MOLDED INTO THE UPPER SURFACE TO RECEIVE THE STEEL BAR AT THE POINT OF SUPPORT. PRECAST CONCRETE CHAIRS SHALL BE MOIST AT THE TIME CONCRETE IS PLACED.

C. FORMS AND SCREEDS

FORMS SHALL BE WOOD, METAL, STRUCTURAL HARDBOARD OR OTHER SUITABLE MATERIAL THAT WILL PRODUCE THE REQUIRED SURFACE FINISH. FORMS PLACED FOR SUCCESSIVE POURS FOR CONTINUOUS SURFACES SHALL BE FITTED TO ACCURATE ALIGNMENT TO ASSURE A SMOOTH COMPLETED SURFACE FREE FROM IRREGULARITIES, AND SHALL BE SUFFICIENTLY TIGHT TO PREVENT THE LOSS OF MORTAR. NO FORMS SHALL BE LEFT PERMANENTLY IN PLACE WITHOUT APPROVAL OF THE ENGINEER. HOLES RESULTING FROM REMOVAL OF FORM TIES SHALL BE FILLED SOLID WITHIN 12 HOURS AFTER REMOVAL OF FORMS WITH CEMENT MORTAR.

D. JOINTS

CONSTRUCTION OF JOINTS NOT INDICATED ON DRAWINGS SHALL BE APPROVED BY THE ENGINEER IN ADVANCE OF POUR. BEFORE DEPOSITING OF CONCRETE IS RESUMED, THE HARDENED SURFACE SHALL BE ROUGHENED, CLEANED AND WETTED SURFACES SHALL BE SLUSHED WITH A COATING OF NEAT CEMENT GROUT AGAINST WHICH THE NEW CONCRETE SHALL BE PLACED BEFORE THE NEW GROUT HAS ATTAINED ITS SET.

E. PLACING AND FINISHING

CONCRETE SHALL BE PLACED AS NEARLY AS POSSIBLE IN ITS FINAL POSITION. RUNWAYS FOR WHEELED EQUIPMENT SHALL NOT BE SUPPORTED ON THE REINFORCEMENT. CONCRETE SHALL BE PLACED AND COMPACTED IN LAYERS NOT OVER 18 INCHES DEEP. VIBRATORS MAY BE USED PROVIDED THEY ARE USED UNDER EXPERIENCED SUPERVISION AND THE MIXTURE IS ENOUGH TO PREVENT SEGREGATION. FORM VIBRATORS SHALL NOT BE USED. VIBRATION SHALL NOT BE USED FOR TRANSPORTING OR MOVING CONCRETE INSIDE THE FORMS. NO MORE CONCRETE SHALL BE PLACED THAN CAN BE CONSOLIDATED AND FINISHED THE SAME DAY AS PLACED. FREE FALL OF CONCRETE SHALL BE LIMITED SO THAT NO SEGREGATION OF MATERIALS OCCURS.

FULL PADS SHOULD BE PLACED IN ONE CONTINUOUS OPERATION WITHOUT INTERVENING JOINTS OF ANY KIND. UNINTERRUPTED CONCRETE PLACING OPERATIONS WITHOUT INTERVENING JOINTS SHOULD BE LIMITED TO ONE FULL PAD WITH CONTINUOUS REINFORCEMENT. CONCRETE SHOULD BE SPREAD, CONSOLIDATED, SCREEDED, BULL-FLOATED AND FINISHED IN ACCORDANCE WITH SECTION 7.2 OF ACI (AMERICAN CONCRETE INSTITUTE) STANDARD 302, RECOMMENDED PRACTICE FOR CONCRETE FLOOR AND SLAB CONSTRUCTION. WHEN CONCRETE IS SUFFICIENTLY SET TO WITHSTAND FOOT PRESSURE WITH ONLY ABOUT 1/4" INDENTATION AND THE WATER SHEEN HAS LEFT THE SURFACE, THE SLAB SHOULD BE UNIFORMLY FINISHED BY POWER FLOATING AND TROWELING. THE FINAL FINISH TEXTURE SHOULD BE A MEDIUM BROOM FINISH.

F. SURFACE TOLERANCES

THE FINISHED SURFACE OF THE PADS SHOULD NOT VARY MORE THAN 1/8" IN 10' WHEN MEASURED IN ANY DIRECTION.

G. COLD WEATHER CONCRETING

ADEQUATE EQUIPMENT SHALL BE PROVIDED FOR HEATING THE CONCRETE MATERIALS AND PROTECTING THE CONCRETE DURING FREEZING WEATHER OR NEAR-FREEZING WEATHER. NO FROZEN MATERIALS OR MATERIALS CONTAINING ICE SHALL BE USED. ALL CONCRETING OPERATIONS IN COLD WEATHER, WHEN TEMPERATURES ARE BELOW 40 DEGREES FAHRENHEIT OR ARE EXPECTED TO FALL BELOW 40 DEGREES FAHRENHEIT SHALL CONFORM TO THE REQUIREMENTS OF ACE 306, "RECOMMENDED PRACTICE FOR COLD WEATHER CONCRETING". SPECIAL ATTENTION IS DRAWN TO THE MINIMUM REQUIRED PLACING AND CURING TEMPERATURES. SALT OR OTHER CHEMICALS SHALL NOT BE USED TO PREVENT FREEZING. CONCRETE DAMAGED BY FREEZING SHALL BE REMOVED AND REPLACED AT THE CONTRACTOR'S OWN EXPENSE.

H. HOT WEATHER CONCRETING

CARE SHALL BE TAKEN TO PROTECT THE CONCRETE OR SCHEDULE THE OPERATIONS TO AVOID PROBLEMS INCURRED WITH FLASH SET OR TOO-RAPID DRYING CONDITIONS. ALL CONCRETING OPERATIONS DURING HOT WEATHER SHALL CONFORM TO THE REQUIREMENTS OF ACI 305 "RECOMMENDED PRACTICE FOR HOT WEATHER CONCRETING". DURING HOT WEATHER, CONSIDERATION SHALL BE GIVEN TO MAINTAINING THE TEMPERATURE OF CEMENT AGGREGATES AND MIXING WATER, SUCH THAT THE TEMPERATURE OF THE CONCRETE AT THE TIME OF DELIVERY TO THE JOB SITE SHALL IN NO CASE EXCEED 90 DEGREES FAHRENHEIT. WHEN THE CONCRETE TEMPERATURE EXCEEDS 80 DEGREES FAHRENHEIT, AN APPROVED RETARDER SHALL BE INCORPORATED INTO THE MIX DESIGN.

I. CURING

EXCEPT FOR METHODS OF CURING SPECIFIED HEREIN, THE CONTRACTOR SHALL SUBMIT FOR APPROVAL, PRIOR TO THE BEGINNING OR THE WORK, HIS PROPOSED METHOD OF CURING. ALL CONCRETE SHALL BE MAINTAINED IN A MOIST CONDITION FOR SEVEN (7) DAYS (THREE DAYS (3) DAYS WITH THE USE OF TYPE III CEMENT) USING METHODS THAT WILL INSURE COMPLETE AND CONTINUOUS SATURATION. SPECIAL CARE SHALL BE GIVEN TO COLD WEATHER CURING SO AS TO MAINTAIN THE REQUIRED CONCRETE TEMPERATURE. THE USE OF WATER SPRAYS IS ACCEPTABLE PROVIDED CARE IS EXERCISED TO AVOID DRY AREAS AND ALTERNATING WETTING AND DRYING. ANY TEARS RESULTING FROM SUBSEQUENT OPERATION ON THE SLAB WITHIN THE SPECIFIED CURING PERIOD SHALL BE TAPED OR THE CURING PAPER OR SHEET SHALL BE REPLACED. WATER SHALL BE ADDED PERIODICALLY AS REQUIRED OR AS ORDERED BY THE ENGINEER SUCH THAT ALL SURFACES REMAIN THOROUGHLY SATURATED. CARE SHALL BE EXERCISED DURING SUBSEQUENT WORK SUCH THAT CONCRETE IS NOT DAMAGED FROM MECHANICAL DISTURBANCES, HEAVY SHOCK OR EXCESSIVE VIBRATION DURING THE EARLY PORTION OF THE CURING PERIOD.

J. TRENCH DRAIN

TRENCH DRAIN SHALL BE JAY R. SMITH MFD CO., ENVIRO-FLO II TRENCH DRAIN, MODEL 9931 TRENCH DRAIN SYSTEM, LOAD CLASS "C" HEAVY DUTY GALVANIZED STEEL GRATE MODEL 9870-416-GS, AND ALL NECESSARY ACCESSORIES TO INCLUDE CATCH BASIN WITH TRASH BUCKET. (OR EQUAL)

K. SOIL

ALL FOOTINGS SHALL BE FOUNDED ON SOLID UNDISTURBED SOIL OR ON FIELD CONTROLLED, COMPACTED FILL. FOOTINGS BEARING SURFACES SHALL BE MECHANICALLY TAMPED TO CONSOLIDATE THE BEARING SOIL. A PRESUMPTIVE SOIL BEARING PRESSURE OF 2,000 PSF WAS USED TO DESIGN THE PRELIMINARY FOUNDATION.
ALL FILL IN AREA OF BUILDING SHALL BE SELECT FILL MATERIAL. FILL SHALL BE PLACED IN 8" MAXIMUM LOOSE LIFTS AND COMPACTED TO A MINIMUM OF 98% MAXIMUM DRY DENSITY (STANDARD PROCTOR METHOD).

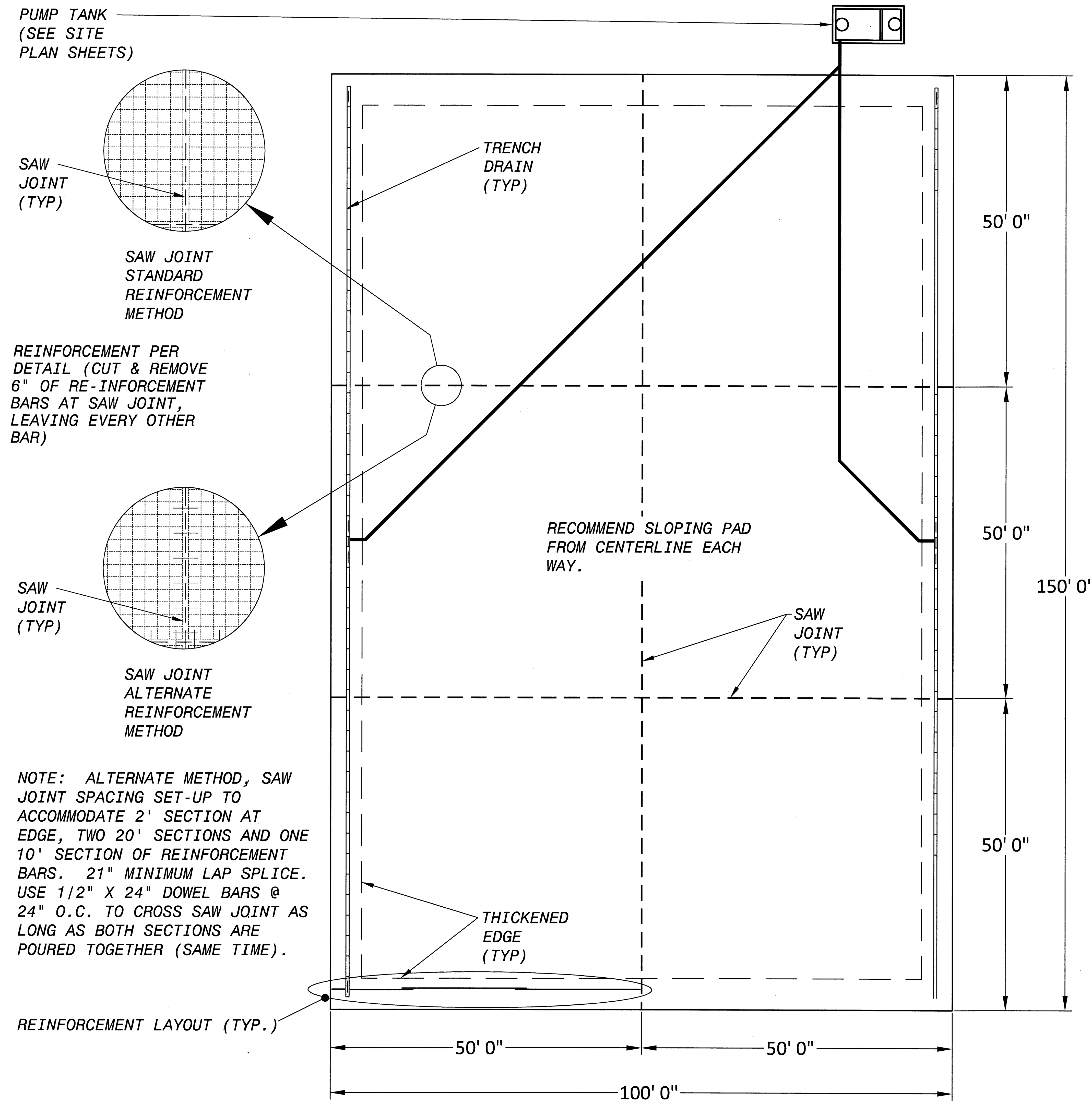

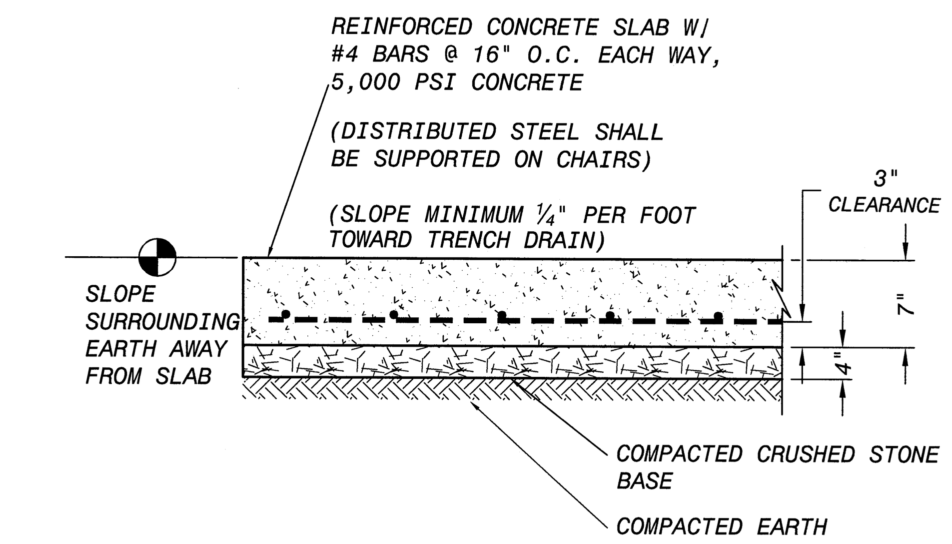

REINFORCED CONCRETE PAD
N.T.S.

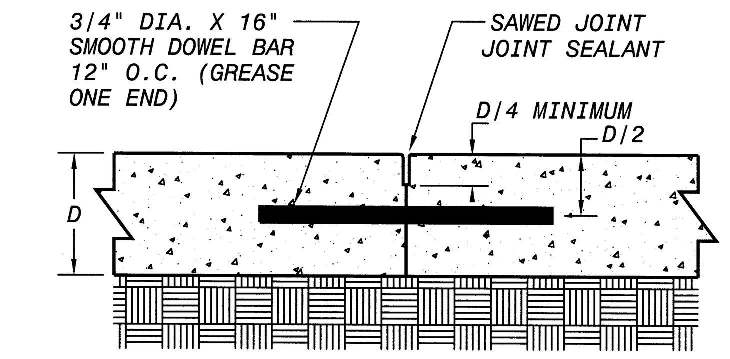

DOWELED BUTT JOINT
(IF NEEDED FOR
(CONSTRUCTION JOINT)

NOTE: ALTERNATE METHOD, SAW JOINT SPACING SET-UP TO ACCOMMODATE 2' SECTION AT EDGE, TWO 20' SECTIONS AND ONE 10' SECTION OF REINFORCEMENT BARS. 21" MINIMUM LAP SPLICE. USE 1/2" X 24" DOWEL BARS @ 24" O.C. TO CROSS SAW JOINT AS LONG AS BOTH SECTIONS ARE POURED TOGETHER (SAME TIME).

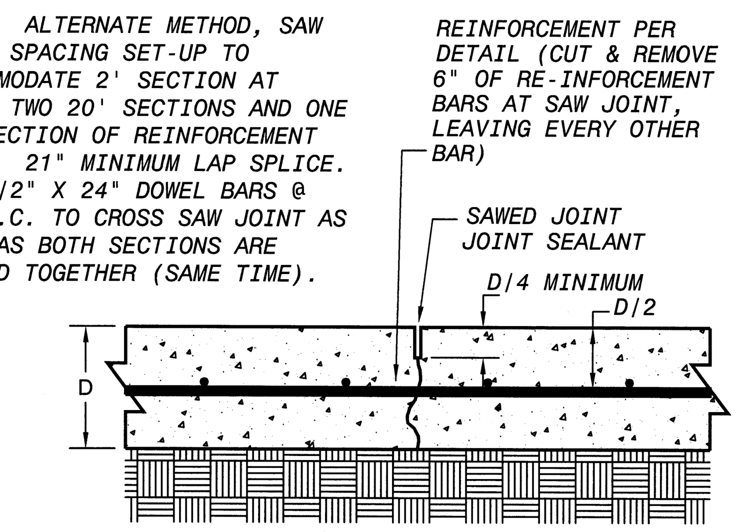

SAW JOINT DETAIL (TYP)

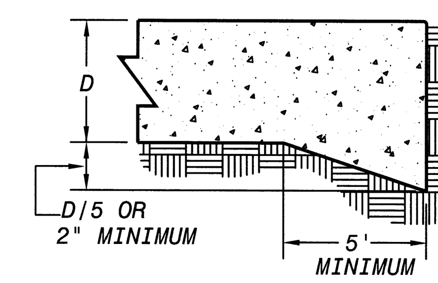

THICKENED EDGE
(END SECTIONS)

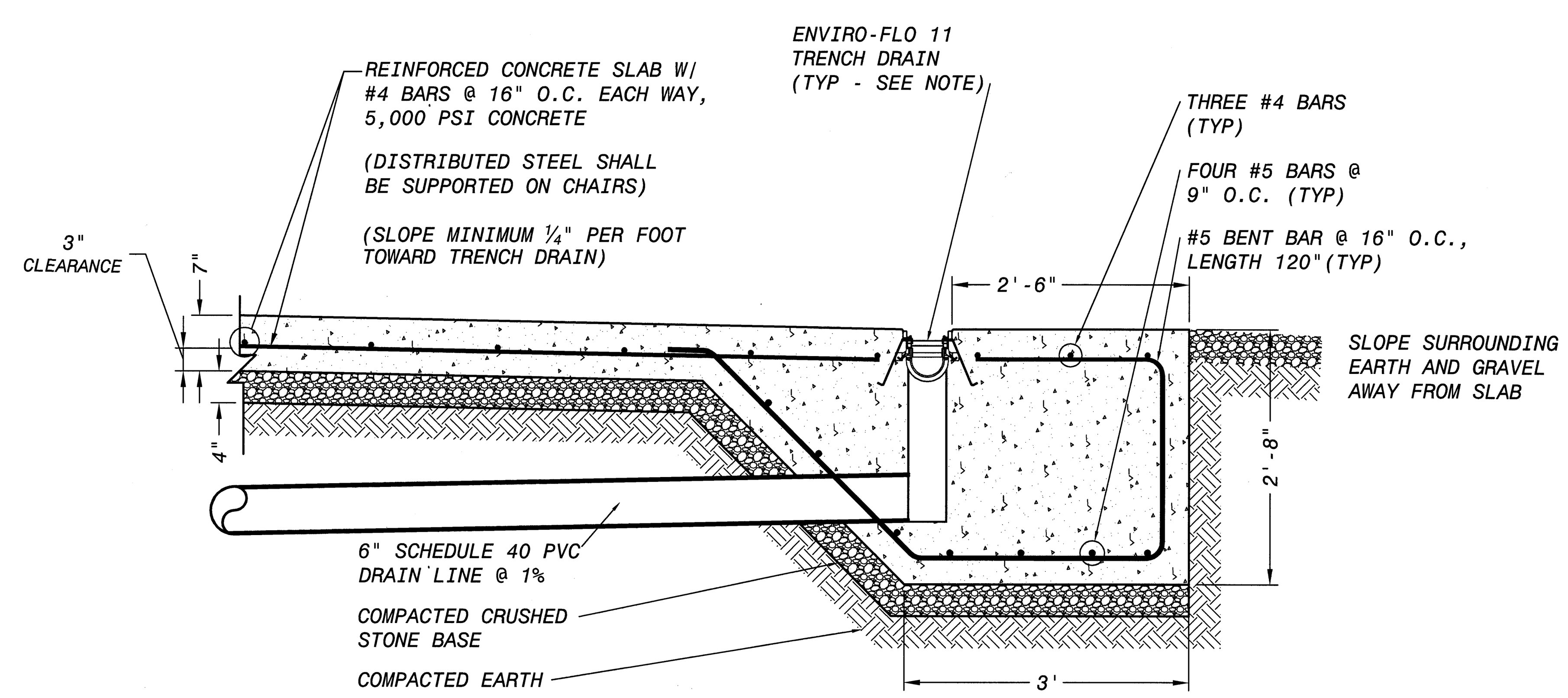

REINFORCED CONCRETE PAD
TRENCH DRAIN AND EDGE SECTION
N.T.S.

WEST CONSULTANTS PLLC
405 South Sterling Street
Morganton, NC 28655
(828) 433-5661

NORTH CAROLINA PROFESSIONAL ENGINEER SEAL 27780 DAVID W. POOL

CONCRETE PAD
DETAILS & SPECIFICATIONS

PROJECT NO.: 15022
SCALE: AS MARKED
DATE: 4-15-2015
DRAWN BY:
REVISION:

FFD II, LLC
SITE PLAN FOR PROPOSED WORK AREA &
CONCRETE SLAB FOR RECYCLING OPERATION
GASTON COUNTY, NORTH CAROLINA

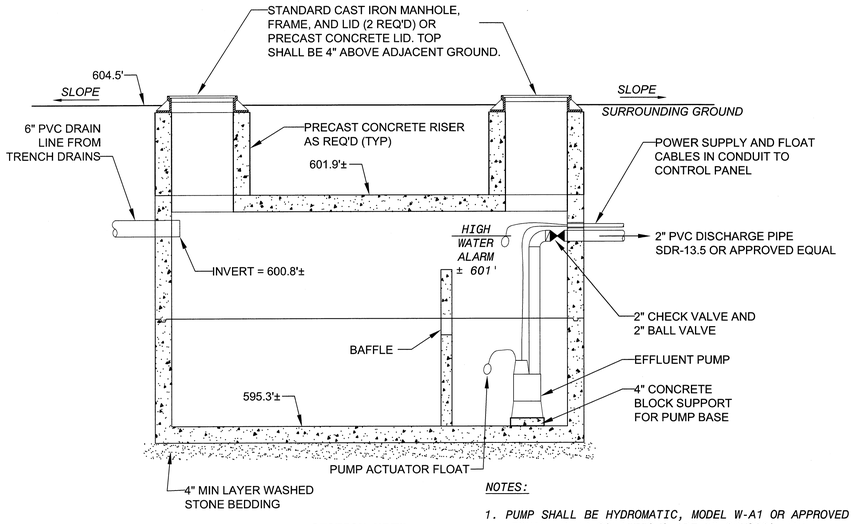

SECTION VIEW

NOTES:

1. *PUMP SHALL BE HYDROMATIC, MODEL W-A1 OR APPROVED EQUAL. PUMP CONDITIONS ARE 10 GPM@20' TDH.*
2. *CONTROL PANEL SHALL BE HYDROMATIC, OR EQUAL, WITH A PUMP RUN TIME METER.*
3. *TANK SHALL BE 2,000 GALLON WITH BAFFLE AND BE OF SUPPLIER'S STANDARD DIMENSIONS.*
4. *TANK SHALL BE A TRAFFIC RATED TANK.*

NEW 2,000 GALLON PUMP TANK

N.T.S.

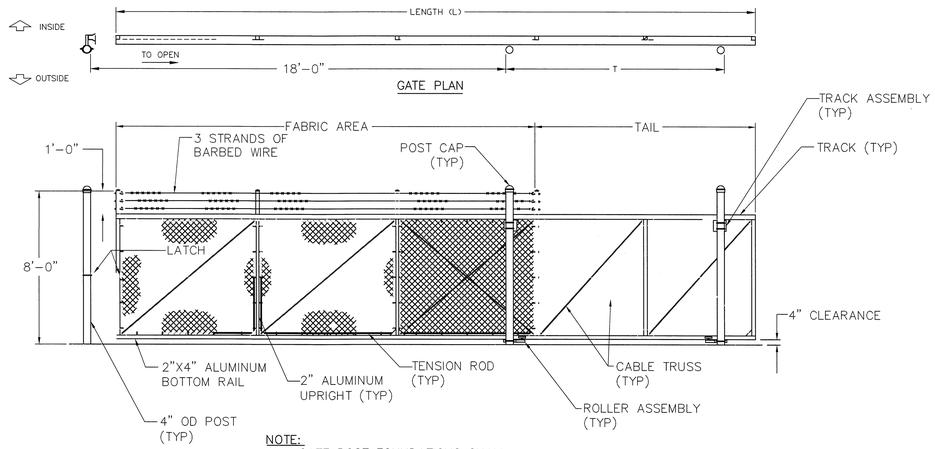

NOTE:
GATE POST FOUNDATIONS SHALL BE AS RECOMMENDED BY THE MANUFACTURER.

CATILEVERED GATE DETAIL

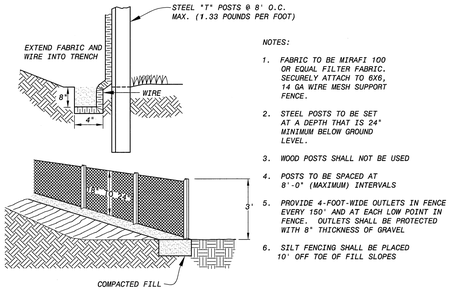

NOTES:

1. *FABRIC TO BE MIRAFI 100 OR EQUAL FILTER FABRIC. SECURELY ATTACH TO 6X6, 14 GA WIRE MESH SUPPORT FENCE.*
2. *STEEL POSTS TO BE SET AT A DEPTH THAT IS 24" MINIMUM BELOW GROUND LEVEL.*
3. *WOOD POSTS SHALL NOT BE USED*
4. *POSTS TO BE SPACED AT 8'-0" (MAXIMUM) INTERVALS*
5. *PROVIDE 4-FOOT-WIDE OUTLETS IN FENCE EVERY 150' AND AT EACH LOW POINT IN FENCE. OUTLETS SHALL BE PROTECTED WITH 8" THICKNESS OF GRAVEL*
6. *SILT FENCING SHALL BE PLACED 10' OFF TOE OF FILL SLOPES*

SILT FENCE DETAIL

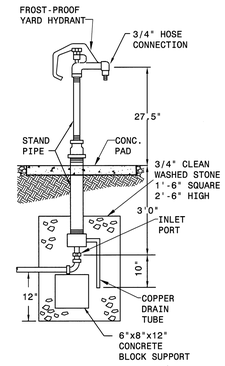

FROST-PROOF YARD HYDRANT

NO SCALE

AGGREGATE SIZE: USE 2"-3" WASHED STONE.
DIMENSIONS OF GRAVEL PAD:
THICKNESS: 6" MINIMUM
WIDTH: 12' MINIMUM OR FULL WIDTH AT ALL POINTS OF THE VEHICULAR ENTRANCE AND EXIT AREA, WHICHEVER IS GREATER.
LENGTH: 50' MINIMUM

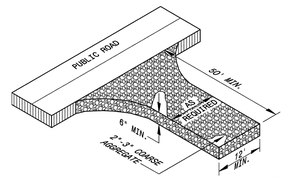

TEMPORARY GRAVEL CONSTRUCTION ENTRANCE

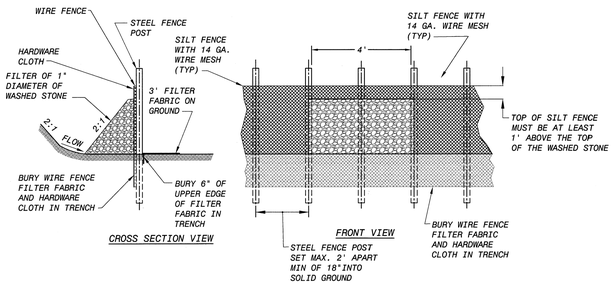

STONE OUTLET

NTS

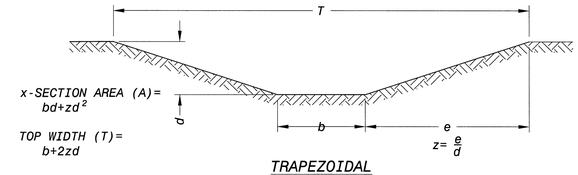

TRAPEZOIDAL

GRASSED CHANNEL CROSS SECTIONS

NOTE: SEE PLANS FOR CHANNEL SCHEDULES

WEST CONSULTANTS, PLLC
405 South Sterling Street
Morganton, NC 28655
(828) 433-5661

NORTH CAROLINA PROFESSIONAL ENGINEER SEAL 27190 DAVID W. WOOD

EROSION CONTROL & PUMP TANK DETAILS

PROJECT NO.: 15022
SCALE: AS MARKED
DATE: 4-15-2015
DRAWN BY:
REVISION:

FFD II, LLC
SITE PLAN FOR PROPOSED WORK AREA & CONCRETE SLAB FOR RECYCLING OPERATION
GASTON COUNTY, NORTH CAROLINA

SHEET

3 OF *3*