OPERATION PLAN
EDGECOMBE COUNTY TRANSFER FACILITY
(PERMIT # 33-02T)
TARBORO, NORTH CAROLINA

S&ME Project No. 1054-13-277A

Prepared for:

Edgecombe County
P.O. Box 10
Tarboro, North Carolina 27886

Permit No.	Date	Document ID No.
33-02T	**November 25, 2014**	**21138**

DOCUMENT APPROVED
Division of Waste Management
Solid Waste Section
Received Dated: April 4**, 2014 and revised through May 23, 2014**
Date: **November 25, 2014** By: **Ming-Tai Chao**

Prepared by:

S&ME, Inc.
3201 Spring Forest Road
Raleigh, North Carolina 27616

May 23, 2014

TABLE OF CONTENTS

Applicant Signature Page
1. BACKGROUND INFORMATION 1
1.1 Introduction 1
1.2 Project Information 1
1.3 Facility Description 2
2. WASTE ACCEPTANCE AND DISPOSAL 2
2.1 General Requirements 3
2.2 Waste Exclusions 4
2.3 Special Wastes 5
2.4 Waste Screening and Acceptance Program 5
3. LEACHATE MANAGEMENT 7
4. FIRE CONTROL 7
4.1 Equipment 7
4.2 Notification 7
5. VECTOR CONTROL 7
6. FACILITY CLEANING 7
7. WINDBLOWN MATERIAL 8
8. ACCESS AND SIGNS 8
8.1 Site Access 8
8.2 Access Roads 8
8.3 Dust Control 8
8.4 Facility Signs 8
8.5 Traffic Signs 8
9. ZONING APPROVAL 9
10. OPERATING RECORD AND RECORDKEEPING 9
10.1 Recorded Information 9
10.2 Information Availability 9
11. FACILITY INSPECTION 9

FIGURES

Figure No. 1 Vicinity Map
Figure No. 2 Site Map
Figure No. 3 Site Plan & Traffic Pattern
Figure No. 4 Transfer Facility Plan

APPENDICES

Appendix I Waste Screening and Acceptance Program Sample Forms
Appendix II City of Rocky Mount Non-Septage Discharge Permit
Appendix III Zoning Approval
Appendix IIV Emergency and Contingency Plan
Appendix V Facility Inspection Form
Appendix VI Property Deeds

May 23, 2014

Mr. Ming-Tai Chao
Solid Waste Section, NCDENR-DWM
1646 Mail Service Center
Raleigh, North Carolina 27699-1646

sent via email: **ming.chao@ncdenr.gov**

Reference: Transfer Facility Permit Application Renewal
Edgecombe County Transfer Facility (Permit #33-02T)
Tarboro, North Carolina
S&ME Project No. 1054-13-277A

Permit No.	Date	Document ID No.
33-02T	**May 27, 2014**	**21135**

Send via an e-mail
Date: **May 23, 2014**
Solid Waste Section
Raleigh Central Office

Dear Mr. Chao:

On behalf of Edgecombe County, S&ME, Inc. (S&ME) is pleased to submit the revised application to renew the permit for the Edgecombe County Transfer Facility (Permit # 33-02T) which expires July 17, 2014. We received your comments on the original April 14, 2014 submittal via email on April 16, 2014. S&ME has addressed your comments as noted below:

1. The Signature Page of Applicant has been completed by Mike Cummings and has been placed behind the Table of Contents in the Operations Plan.
2. The text regarding the renewal time frame for the wastewater discharge permit has been amended in Section 3 of the Operations Plan.
3. We have amended the text in Section 4.2 of the Operations Plan and Section 6 in the Emergency and Contingency Plan to include written notification on the Fire Occurrence Report Form. The Fire Occurrence Report Form has been added as Appendix II in the Emergency and Contingency Plan.
4. We have revised the phone numbers for Ben Barnes as well as the NC Division of Emergency Management in Section 2 of the Emergency and Contingency Plan.

We would still like to request to have the option for the issuance of a 10-year permit for the Transfer Station per 15A NCAC 13B.0206, rather than the 5-year permit as previously issued.

Please call us at (919) 872-2660 if you have any questions or comments, or if we can be of further assistance.

Sincerely,
S&ME, Inc.

Claudia B. Irvin, E.I.T.
Staff Professional

Samuel P. Watts, P.G.
Senior Project Manager

Enclosure: *Operation Plan, Edgecombe County Transfer Facility*, dated May 23, 2014

cc: Mr. Mike Cummings - Edgecombe County Solid Waste Manager

From: Sam Watts
To: Chao, Ming-tai
Subject: Edgecombe County MSW Transfer Station (3302T)
Date: Friday, May 23, 2014 2:51:46 PM

Sam Watts has sent you files.

> Click here to download **Edgecombe County Transfer Facility Operation Plan - REV May 2014.pdf**

Note From Sam:

to: ming.chao@ncdenr.gov
cc: dennis.shackelford@ncdenr.gov
cc: ben.barnes@ncdenr.gov
cc: mcummings@co.edgecombe.nc.us
cc: gloria.edgecombe@yahoo.com
cc: cirvin@smeinc.com

Hi Ming

Please use the link above to download a .pdf copy of the revised application to renew the permit for the Edgecombe County Transfer Facility (Permit # 33-02T) which expires July 17, 2014. Edgecombe County request to have the option for the issuance of a 10-year permit for the Transfer Station, per 15A NCAC 13B.0206.

Please contact me if you have any problems downloading the file. If if you have any questions about the permit application.

Sincerely
Sam

Samuel P. Watts, PG
Senior Project Manager

ENGINEERING INTEGRITY.

S&ME, Inc.
3201 Spring Forest Road
Raleigh NC 27616

Ph: 919-872-2660
Fax: 919-876-3958
Mobile: 919-801-4920
swatts@smeinc.com
www.smeinc.com

S&ME, Inc. is an award-winning engineering and environmental services firm employing 950 professional and support staff in offices throughout the Southeast.

Trouble with the above link? You can copy and paste the following URL into your web browser:
https://sme.sharefile.com/d/3403ba1c0d374762

This electronic message and its attachments are forwarded to you for convenience and “for information only.” The message may represent a summary with limitations, conditions and further explanations omitted in the interest of brevity and time constraints. The contents of this electronic message and any attachments may be preliminary and incomplete, subject to review and revision. If this electronic transmittal contains Findings, Conclusions or Recommendations, S&ME, Inc. will submit a follow-up hard copy via mail or overnight delivery for your records, and this hard copy will serve as the final record. In the event of conflict between electronic and hard copy documents, the hard copy will govern. This electronic message and any attachments transmitted with it are the property of S&ME, Inc. and may contain information that is confidential or otherwise protected from disclosure. The information this electronic message contains is intended solely for the use of the one to whom it is addressed, and any other recipient should delete this electronic message and destroy all copies. VER 4, Rev 1 –- 031207

Permit No.	Date	Document ID No.
33-02T	April 16, 2014	20875

Send via an e-mail
Date: **April 16, 2014**
Solid Waste Section
Raleigh Central Office

From: Chao, Ming-tai
To: Samuel Watts
Cc: gloria.edgecombe@yahoo.com; "mcummings@co.edgecombe.nc.us"; Shackelford, Dennis; Barnes, Ben
Subject: Comments on the Operation Plan, Edgecombe County Transfer Station, 33-02T
Date: Wednesday, April 16, 2014 11:44:00 AM
Attachments: certification_Appicant.pdf
fire_report.pdf

Hey Sam:

The Solid Waste Section has completed a review of the Operation Plan (Doc ID 20846) for the above-referenced Transfer Station and a few comments stated below:

1. Please have Mr. Cummings to complete the attached certification form – Signature Page of Applicant, which is a port of the permit application.

2. (Section 3 & Appendix II) Since the wastewater permit is required to be renewed either annually or a time-frame much less than the request 10-year permit cycle, the wastewater permit(s), either historical or current ones must be placed in the operating records and subjected to periodic inspection and review by the Solid Waste Section. Please add the requirement to this Section.

3. (Section 4.2 & Section 6 of Appendix IV) Please reference and append the SWS "Fire Occurrence Report" (see attached document) to the Operations Plan. Should a fire occurs, the form can be used to report a fire incident. The Form can be directly downloaded from SWS website at http://portal.ncdenr.org/c/document_library/get_file?uuid=18760b57-0f71-464e-b89f-cf4790caa65f&groupId=38361.

4. (Appendix IV) Please verify and confirm the phone number of NC Division Emergency Management. The phone numbers to reach Ben Barnes have been changed to 252-236-4453 (office) & 919-621-3680 (mobile).

Additionally, I was told that the permit fee invoice ($5,500) and documents related to compliance history review at this facility had been sent to Mr. Cummings. Everything is on track right now.

Please contact me if you have any questions or requests to further clarification on above-mentioned comments or permitting processes. Have a wonderful day.

The North Carolina Solid Waste and Materials Management Plan is currently in the process of being updated for the 2014-2024 cycle and feedback is being solicited in order to develop an action-based,
achievable, and inclusive plan. One significant step toward achieving this goal is to survey the various stakeholders of North Carolina on elements of the proposed plan, keeping in mind that the
North Carolina General Statutes require the plan to focus on education, public participation, and waste reduction goals.

The NCDENR Division of Waste Management thanks you for your participation in this survey: https://www.surveymonkey.com/s/2V33G2Z

Ming Chao

Ming-Tai Chao, P.E.
Environmental Engineer
Permitting Branch, Solid Waste Section
Division of Waste Management
(Mailing Address)
1646 Mail Service Center
Raleigh, NC 27699-1646
(Street Address)
Green Square, 217 West Jones Street
Raleigh, NC 27603
Tel. 919-707-8251
ming.chao@ncdenr.gov
http://portal.ncdenr.org/web/wm/sw

E-mail correspondence to and from this address may be subject to the North Carolina Public Records Law and may be disclosed to third parties.

Applicant Signature Page

Name of Facility **Edgecombe County Transfer Facility**

I certify that I have read and understand this application and that the information provided is true, accurate, and complete to the best of my knowledge.

I understand that North Carolina General Statute 130A-22 provides for administrative penalties of up to fifteen thousand dollars ($15,000.00) per day per each violation of the Solid Waste Management Rules. I further understand that the Solid Waste Management Rules may be revised or amended in the future and that the facility siting and operations of this solid waste management facility will be required to comply with all such revisions or amendments.

Mike Cummings	**Mike Cummings**	4-23-14
Signature	Print Name	Date

Edgecombe County Solid Waste Manager

Title

Edgecombe County

Business or Organization Name

OPERATION PLAN
EDGECOMBE COUNTY TRANSFER FACILITY
(PERMIT # 33-02T)
TARBORO, NORTH CAROLINA

1. BACKGROUND INFORMATION

1.1 Introduction

This Operation Plan is presented to provide the necessary requirements as specified in the Solid Waste Management Rules, Section .0402. The purpose of the Operation Plan is to provide details of the procedures and policies of the Edgecombe County Municipal Solid Waste (MSW) Transfer Facility in a single document for use at the facility. The information contained in this plan shall be used to assist Edgecombe County in the day-to-day operations and the periodic maintenance and monitoring requirements during the operation of the facility. Included in this plan are sections concerning waste acceptance, leachate management, fire control, vector control, facility cleaning, windblown litter, access, and signs.

1.2 Project Information

The Edgecombe County Transfer Facility is located on State Route 1601 (Colonial Road) approximately 4.5 miles south of Tarboro, North Carolina. The existing facility is bounded to the north by Jerry's Creek, to the west by SR Route 1601 and to the east and south by undeveloped agricultural land. The approximate location of the transfer facility, and surrounding vicinity, is shown on **Figure 1**, Vicinity Map. The property consists of two deeds, which total 274.31 acres. The deeds are included in **Appendix VI**. The contact information and physical address of the facility is as follows:

Mr. Mike Cummings
2797 Colonial Road (S.R. 1601)
Tarboro, North Carolina 27886
Phone: (252) 827-4253 (o), (252) 813-3945 (c)
E-mail: mcummings@co.edgecombe.nc.us

Any changes to the contact information shall be placed into the Operating Record and updated in the next permit renewal.

The North Carolina Department of Environment and Natural Resources (NCDENR), Division of Waste Management (Division) issued Permit No. 33-02T to construct and operate the transfer facility on June 9, 1998 and was renewed in July 2009. The County has continued to operate the transfer facility in accordance with the most recent permit since that time.

Other waste operations on the facility property include:

- C&D Landfill (west of State Route 1601), which operates under Permit No. 33-01;
- Yard Waste Processing Area;
- Tire Collection Area (west of State Route 1601) for shipment to an off-site vendor;
- Electronics and Oil Filter Storage building (west of State Route 1601) for shipment to off-site vendors;
- Pesticide Container Storage building for shipment to an off-site vendor;
- Convenience Center;
- Concrete Disposal Area;
- White Goods Staging Area for shipment to an off-site vendor; and
- Wooden Pallet Staging Area for shipment to an off-site vendor.

The existing construction and demolition (C&D) landfill is operated on top of a closed MSW unit. The MSW unit stopped receiving waste December 1997. The layout of the facility is shown on **Figure 2**, Site Map.

1.3 Facility Description

The Edgecombe County Transfer Station consists of a 4,200 square foot covered tipping floor with a depressed truck-loading bay for top loading transfer trailers (**Figures 3 and 4**). Compaction is by means of a loader-mounted tamper. The transfer trailers are staged in two open, gravel-covered parking areas that are in good condition and are located adjacent to the transfer facility. Leachate from the facility is collected in a floor drain in the loading bay and is stored in a leachate tank after passing through an oil/water separator with grit chamber. The leachate tank and oil/water separator are pumped out as necessary and the material disposed of at a wastewater treatment facility (WWTF). The scale and scale house record waste tonnage received at the facility. An office/weigh station is located adjacent to the transfer facility and provides easy access to records, permits, operations plans, and emergency information. An emergency eyewash station is provided for the safety of the County staff at the nearby breakroom building. Large ventilator fans capable of changing the tipping floor building air are provided to minimize harmful or nuisance odors. Extensive lighting for both interior and exterior is provided. Safety rails in accordance with North Carolina Building Codes and Occupational Safety and Health Administration (OSHA) Requirements are provided. The water for the facility is supplied from the County-wide municipal water distribution system.

2. WASTE ACCEPTANCE AND DISPOSAL

The operating hours of the transfer station are 8:00 A.M. - 4:30 P.M. on Monday through Friday, and 7:30 A.M. – 11:30 A.M. on Saturday, except on holidays. The maximum daily tonnage for the facility is 210 tons per day. The equipment used is a rubber tired articulated front end loader with quick release bucket and a quick connect trash tamper, transfer trailers, an off-road or over the road tractor for staging the transfer trailers, and an agricultural tractor for general mowing and maintenance. There shall be at least one

responsible individual trained and certified in facility operations, on-site, and all times during operation hours.

MSW, excluding white goods, yard waste, tires, agricultural pesticide containers, containerized waste, and recyclables, are to be received by dumping on the tipping floor and spreading for inspection to verify the waste is receivable as MSW. If liquid or hazardous waste is discovered, **Section 5** of the Emergency and Contingency Plan shall be followed (**Appendix IV**). If other waste that is not accepted by the facility is discovered, the material will be removed by the responsible party for disposal at an appropriate facility. The MSW is then pushed to a waste hopper at the back of the building where it is directed to a waiting transfer trailer. A trash tamper connected to the front-end loader will be used to compact the waste in the transfer trailer. Once the transfer trailer is full, it will be moved to the trailer staging area where the top of the trailer is covered with a tarp. The transfer trailer is then driven to a permitted facility for disposal. The primary permitted facility for disposal is:

East Carolina Regional Landfill
Permit No. 08-03
1922 Republican Road
Aulander, Bertie County, North Carolina 27805

An alternate permitted facility for disposal is:

Sampson County Disposal, LLC
Permit No. 82-02
7434 Roseboro Highway
Roseboro, Sampson County, North Carolina 28382

Waste shall not be stored on the tipping floor after operating hours. Waste may be stored at the facility after hours in covered transfer trailers, but no longer than 24 hours, except that a minimum amount of waste can be stored for a maximum of 72 hours when the facility is closed for weekends or holidays.

Equipment servicing will be carried out at the existing maintenance facility west of Colonia Road.

2.1 General Requirements

The Edgecombe County Transfer Facility shall only accept those wastes it is permitted to receive, which includes MSW as defined G.S. 130A-290(a)(18a). Municipal solid waste does not include hazardous waste, sludge, industrial waste managed in a solid waste management facility owned and operated by the generator of the industrial waste for management of that waste, or solid waste from mining or agricultural operations and are prohibited from acceptance at the facility.

The service area for the facility includes the following North Carolina counties:

- Edgecombe
- Nash
- Halifax
- Wilson
- Martin
- Pitt

Animal carcasses are accepted at the transfer facility if they are wrapped in plastic or placed in heavy-duty plastic bags.

2.2 Waste Exclusions

The following waste shall not be accepted by the facility for disposal:

- Regulated asbestos waste as defined in 40 CFR 61;
- Hazardous waste as defined in G.S. 130A-290(a)(8), to also include hazardous waste from conditionally exempt small quantity generators;
- Liquid wastes;
- Radioactive waste as defined in G.S. 104E-5(14);
- Septage as defined in G.S. 130A-290(a)(32);
- Sludge as defined in G.S. 130A-290(a)(34);
- Used Oil as defined in G.S. 130A-290(b)(5);
- Lead-acid batteries;
- Whole Tires;
- White goods as defined in G.S. 130A-290(a)(44);
- Yard trash as defined in G.S. 130A-290(a)(45);
- Poly Chlorinated Biphenyls (PCB) wastes defined in 40 CFR 761;
- Fluorescent and high-intensity discharged lamps;
- Ashes;
- Incinerator residuals;
- Regulated medical wastes;
- Sharps not properly packaged; and
- Containerized Waste.

Regulated asbestos waste, as defined in 40 CFR 61, shall not be accepted at the transfer facility. However, regulated asbestos waste may be accepted at the C&D Landfill in accordance with its permit. The C&D Landfill is located at the Edgecombe County Solid Waste facility, on the west side of Colonial Road.

White goods, as defined in G.S. 130A-290, shall not be accepted at the transfer facility. However, white goods may be accepted for shipment to an off-site vendor in the White goods collection area. The white goods staging area is located at the Edgecombe County Solid Waste facility east of the transfer station near the entrance to Borrow Area 1.

Yard trash, as defined in G.S. 130A-290, shall not be accepted at the transfer facility. However, yard trash, along with land-clearing debris, may be accepted for processing in the Yard Waste Processing Area.

Recyclables are collected at the convenience center located adjacent to the transfer facility for shipment off-site to a vendor. Pesticide containers are also collected at the convenience center and stored in the Pesticide Container Building located just south of the transfer facility prior to processing by an off-site vendor.
Whole tires are collected at the tire staging area on the western side of Colonial Road at the foot of the landfill for shipment off-site to a vendor.

Edgecombe County shall not knowingly dispose of any type or form of MSW that is generated within the boundaries of a unit of local government that by ordinance:

1. Prohibits generators or collectors of MSW from disposing of that type or form of MSW.
2. Requires generators or collectors of MSW to recycle that type or form MSW.

The transfer facility operator shall notify the Division within 24 hours of any attempt to dispose of any waste products not approved by the Division for disposal at the facility.

2.3 Special Wastes

Other wastes may be approved by the Division upon receipt of a written request with the specific waste type, how its generated, how much is generated; along with any additional information the Division may request to render a final decision on the disposal options for the waste.

2.4 Waste Screening and Acceptance Program

The County conducts a waste screening and acceptance program at the facility for detecting and preventing disposal of unauthorized waste including hazardous and liquid wastes. The program consists of random inspections of incoming loads. One inspection is performed per every ten operating days for commercial and industrial waste. The selection of the vehicle that will have its load inspected is the responsibility of the Operations Manager or a person he designates. The selection of the vehicle is made at the scales. The hauler is required to sign the Pre-Acceptance Agreement as shown in the **Appendix I**. The Scale Technician notifies the transfer facility's Screening Inspector (chosen by Operations Manager and adequately trained) to meet the designated hauler at the tipping floor.

The hauler dumps the load of waste in the area designated by the Screening Inspector. The Screening Inspector then sorts through the waste using a loader or other similar equipment for handling bulky materials and by hand with a rake or shovel. Once the waste is spread thin enough to observe the entire load, the inspector records the information required on the Detailed Screening Report form and Waste Screening Check List as shown in **Appendix I**. Inspectors should look for industrial containers with hazard labels, boxes, bags, closed drums, liquids, powders, dust, sludge’s, bright or

unusual colors, smoking wastes, chemical odors, and large transformers which might indicate regulated hazardous waste or PCB waste. Look for symbols or key words on containers that would indicate hazardous materials; also be watchful of criminal activity and human remains. Hazardous waste may exhibit the following properties:

- Ignitable
- Corrosive
- Reactive
- Toxic

If hazardous waste, liquid waste, or waste not characterized as MSW is not found in the inspected load, then the waste is loaded into the transfer trailers immediately after completion of the inspection.

If hazardous waste, liquid waste, or waste not characterized as MSW is identified in the load, the Screening Inspector shall immediately implement the Emergency and Contingency Plan included as **Appendix IV**. The transfer facility staff will record the identity of the hauler and generator of the unauthorized waste. If it is believed that the hazardous waste has passed through the floor drains and into the oil/water separator or leachate tank, the typical receiver of the waste from the leachate storage tank and oil/water separator will be notified that the liquids are believed to have possibly been tainted with hazardous wastes. If the typical receiver of the waste cannot treat the tainted waste, the waste will be characterized and disposed of at a proper facility.

In addition, the scale personnel and operators shall be educated to recognize probable violations to the acceptable waste guidelines. Personnel will attempt to halt the disposal of unauthorized waste and have the material removed by the responsible party if non-hazardous. If the waste is thought to be hazardous, the procedures described in the Emergency and Contingency Plan will be implemented. If the presence of excluded waste is discovered only after loading the waste into the transfer trailer has commenced, the operator will contact the scale house to establish the hauler and generator responsible for the load so that they can be made aware of their mistake and their future loads inspected more carefully.

Records of the inspections shall be maintained in the Operating Record for the facility. Sample forms for the screening inspections are provided in **Appendix I**. Facility personnel involved with the screening inspections shall be trained for identification of hazardous and liquid wastes through programs offered by the State or by the Solid Waste Association of North Carolina (SWANA). Records of the training shall be maintained in the Operating Record for the facility and include the following:

1. Date of training.
2. A statement asserting that the training included:
   A. Recognition of regulated hazardous waste, liquid waste, PCBs, and banned items.
   B. Hazardous waste safety precautions.

3. Written acknowledgement of training by facility personnel.

The transfer facility operator shall notify the Division within 24 hours of any attempt to dispose of any waste products not approved by the Division for disposal at the facility.

3. LEACHATE MANAGEMENT

Water that comes into contact with solid waste and washwater will be contained on-site and properly disposed of at a designated WWTF. The wastewater will flow by gravity through a floor drain to an 800 gallon oil/water separator and then into a 5,000 gallon leachate holding tank with audible and visual high water alarm. Material from the oil/water separator and the leachate holding tank will be pumped and then hauled to the Tar River WWTF located in Rocky Mount, North Carolina for final treatment and disposal. A copy of the City of Rocky Mount 2014 Non-Septage Discharge Permit #20130104 issued January 1, 2014 is included in **Appendix II**. Since this wastewater permit is required to be renewed annually or at a time frame less than that of the requested 10-year permit cycle for the transfer station, the wastewater permits, current and historical, must be placed in the operating records and are subjected to periodic review by inspection and review by the Solid Waste Section.

4. FIRE CONTROL

4.1 Equipment

Equipment is available to control fires. Fire extinguishers are located in the transfer facility building and on the front-end loader used to load and compact the waste into the transfer trailers. Edgecombe County has made arrangements with the Princeville Fire Department to provide fire-fighting services as needed.

4.2 Notification

Any fires or explosions that occur at the facility shall be verbally reported to the Division within 24 hours and written notification provided within 15 days. The written notification should be made on the *Solid Waste Management Facility Fire Notification Form* that is included in the Emergency and Contingency Plan in Appendix IV.

5. VECTOR CONTROL

Control of vectors, such as flies, rodents, mosquitoes, or other animals or insects, capable of transmitting disease to humans, is an important environmental control. Control is accomplished by denying them a source of food and water by not storing waste on the tipping floor overnight, tarping loaded transfer trailers, and cleaning the facility as needed.

6. FACILITY CLEANING

The tipping floor, walls around tipping floor, hopper, and loading bay are swept daily by transfer station staff. The area is regularly washed down with a high powered water house and also washed with a power washer approximately three times a year as needed

to maintain sanitary conditions. The water for the facility is supplied from the County-wide municipal water distribution system.

The tipping floor and loading bay are both enclosed. Washwater is directed to a large trench drain that is plumbed to the oil/water separator and leachate holding tank, and kept separated from stormwater runoff. Disposal is by means of pumping the tanks out and hauling to an existing WWTF. The trench drain is steam-cleaned at least annually or as necessary to maintain flow. Cleaning of the trench drain and pumping of the oil/water separator shall be recorded in the Operating Record.

7. WINDBLOWN MATERIAL

Chain-link fencing is installed adjacent to the transfer facility and helps to confine windblown material. In addition, the transfer trailers are covered once they are loaded and taken to the trailer staging area.

At the conclusion of each day of operation, windblown material resulting from the operation shall be collected and properly disposed of by Edgecombe County.

8. ACCESS AND SIGNS

8.1 Site Access

Two chain-link gates (Gates 1 and 3) with chain-link and barbed wire fencing control ingress/egress to the facility from Colonial Road Transfer Station. A security check station and weigh scales are located at the facility entrance to evaluate the incoming waste for proper disposal.

8.2 Access Roads

Access roads to the site are of all weather construction and shall be maintained in good condition.

8.3 Dust Control

Dust generated due to transfer facility activities will be controlled through the application of water by truck or other approved dust control procedures, if necessary. Removal of mud and dirt from the roads will also be a part of the dust control measures and will be accomplished with a motor grader.

8.4 Facility Signs

Signs providing information on disposal procedures, the hours that the site is open for public use, the permit number, emergency contact and phone number, and other pertinent information, such as scale location, are posted at the site entrance.

8.5 Traffic Signs

Traffic signs and markers are provided as necessary to promote an orderly traffic pattern to and from the tipping floor and maintain efficient operating conditions. The traffic plan is depicted on **Figure 3**, Site Plan & Traffic Pattern.

9. ZONING APPROVAL

A copy of the approval letter from the Edgecombe County Planning & Inspections Department stating that the existing facility meets all the requirements of the local zoning ordinance is included in **Appendix III**.

10. OPERATING RECORD AND RECORDKEEPING

10.1 Recorded Information

Edgecombe County shall maintain on-site the following information:

- Records of random waste inspections, certifications of employee training, and training procedures;
- Amounts by weight of solid waste received daily at the facility to include, consistent with G.S. 130A-309.09D, county of generation;
- A copy of the approved Operation Plan;
- A copy of the current Permit to Operate;
- Leachate disposal records, including testing or analytical data required for disposal at the off-site WWTF; and
- Audit records, compliance records, and inspection reports.

Daily scale records are summarized into monthly reports, which are used to generate the annual report required to be submitted on or before August 1 for the previous year beginning July 1 and ending June 30. The report is submitted to the Division and a copy is provided to each County from which waste was received.

10.2 Information Availability

All information contained in the Operating Record shall be furnished to the Division according to the permit or upon request, or be made available for inspection by the Division.

11. FACILITY INSPECTION

Site personnel who are familiar with the transfer facility and its operations shall perform regular monthly inspections of the facility. The monthly inspections shall include, at a minimum, the following items:

- Building and foundations
- Retaining walls and push walls
- Fire extinguishers
- Emergency eyewash station
- Tipping floor, loading bay, and floor drains
- Water hose and reel
- General electrical conditions
- Leachate tank, audible and visual high level alarm, oil/water separator
- Transfer trailers

A checklist with map is included to aid in making the inspections complete and to provide documentation. Any unsatisfactory condition observed shall be noted on the form and reported to the County employee in charge of facility operations, which is currently Mr. Mike Cummings. If a threat to safety or the environment is identified, immediate action shall be taken to correct the situation. Deficiencies shall be corrected as soon as practical of their observation. Once a deficiency is corrected, it shall be noted on the inspection form and recorded in the Operating Record the facility. The completed inspection forms shall be kept in a folder in the scale house and shall include no more than a year's worth of inspection reports. The previous form shall be reviewed prior to conducting the current inspection. A sample inspection form is included in **Appendix V**.

FIGURES

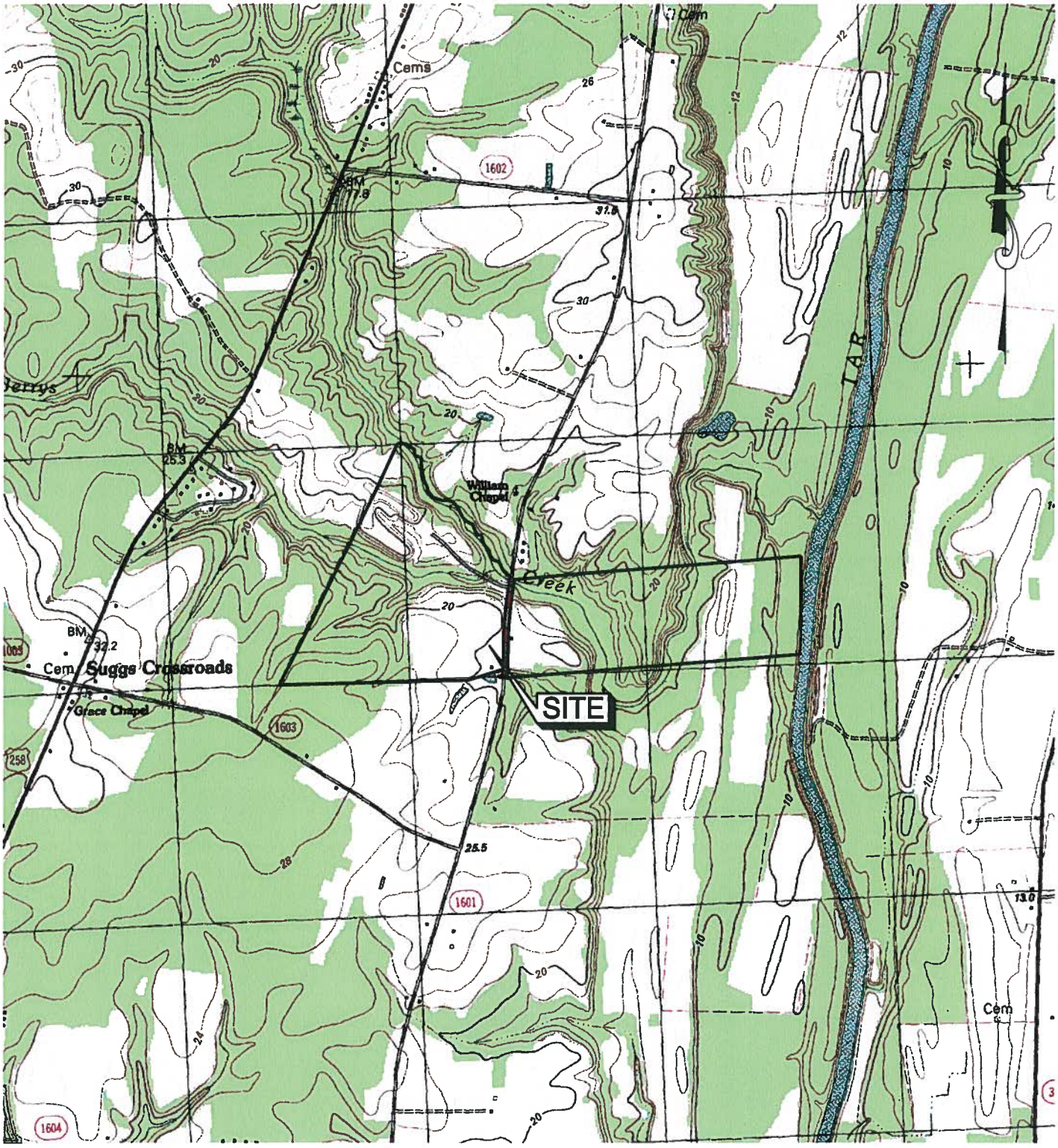

GRAPHIC SCALE

1000 0 500 1000 2000

(IN FEET)

TOPO SOURCE: NCGS DRG
OLD SPARTA, NC (035077G5) DATED 1981
CONTOUR INTERVAL: 2 METERS

A-4109

SCALE: 1" = 2000'	S&ME WWW.SMEINC.COM	VICINITY MAP	FIGURE NO.
DATE: FEB. 2014		PERMIT APPLICATION	1
DRAWN BY:		EDGECOMBE CO. TRANSFER FACILITY	
PROJECT NO: 1054-13-277A	NC ENGINEER LICENSE #F-0176 3201 SPRING FOREST RD, RALEIGH, NC 27616	TARBORO, NORTH CAROLINA	

S:\PROJECTS\2013\13-277A Edgecombe Permit Applications\CAD\A4109.dwg, FIG1, 2/10/2014 2:26:03 PM, 1:1

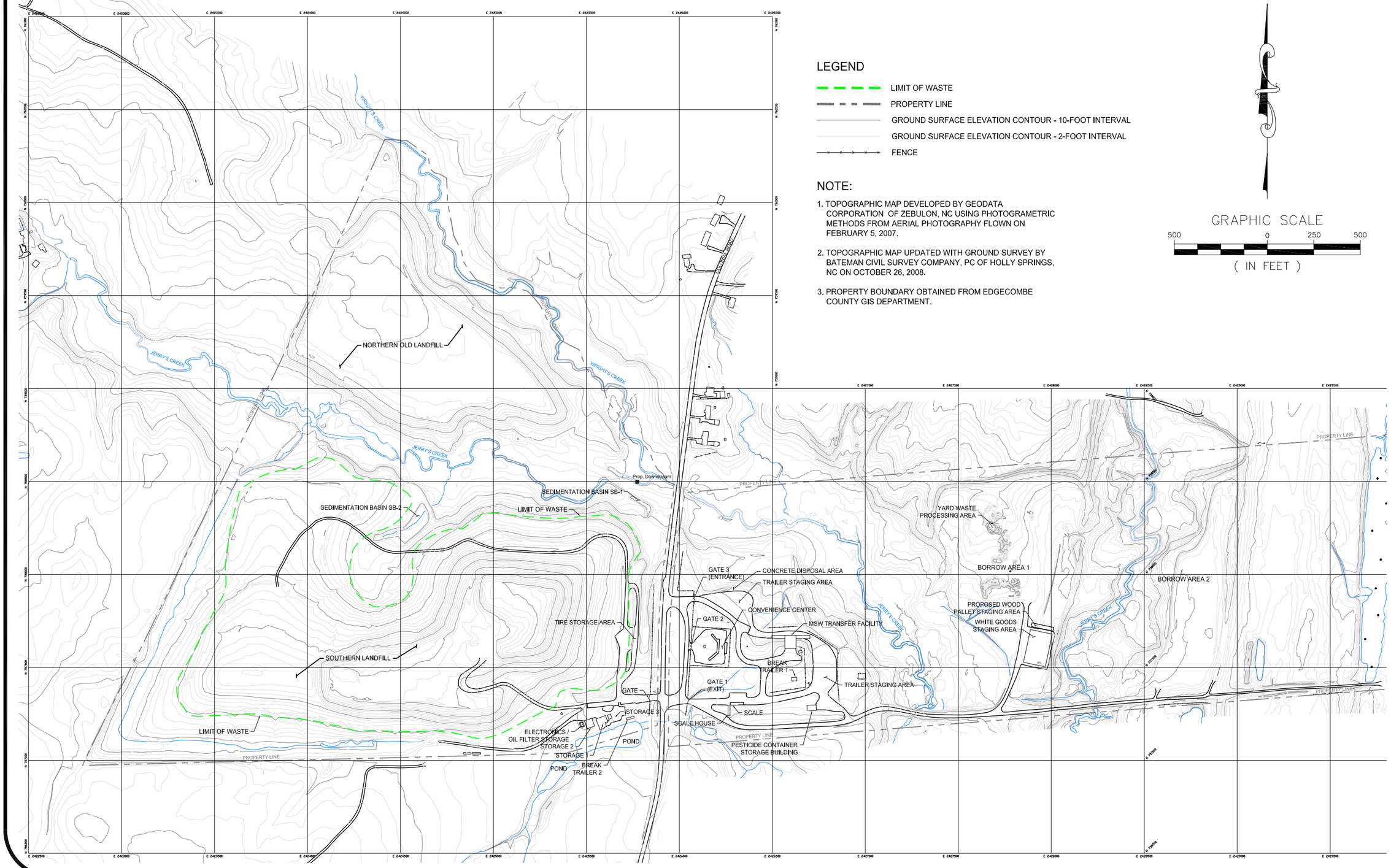

LEGEND

- LIMIT OF WASTE
- PROPERTY LINE
- GROUND SURFACE ELEVATION CONTOUR - 10-FOOT INTERVAL
- GROUND SURFACE ELEVATION CONTOUR - 2-FOOT INTERVAL
- FENCE

NOTE:

1. TOPOGRAPHIC MAP DEVELOPED BY GEODATA CORPORATION OF ZEBULON, NC USING PHOTOGRAMETRIC METHODS FROM AERIAL PHOTOGRAPHY FLOWN ON FEBRUARY 5, 2007.
2. TOPOGRAPHIC MAP UPDATED WITH GROUND SURVEY BY BATEMAN CIVIL SURVEY COMPANY, PC OF HOLLY SPRINGS, NC ON OCTOBER 26, 2008.
3. PROPERTY BOUNDARY OBTAINED FROM EDGECOMBE COUNTY GIS DEPARTMENT.

GRAPHIC SCALE

500 0 250 500

(IN FEET)

DATE: FEB. 2014	
SCALE: 1" = 500'	DRAWN BY: BTR
PROJECT NUMBER: 1054-13-277A	CHECKED BY:
DRAWING NUMBER: B-2310	

S&ME
WWW.SMEINC.COM

SITE MAP

PERMIT APPLICATION EDGECOMBE CO. TRANSFER FACILITY
TARBORO, NORTH CAROLINA

FIGURE NO.

2

GATE 3
(ENTRANCE)

TRAILER STAGING AREA

CONVENIENCE CENTER

5,000 GAL. LEACHATE TANK

800 GAL. OIL / WATER SEPARATOR

8" PVC SEWER PIPE

TRENCH DRAIN

MSW TRANSFER FACILITY

JERRYS CREEK

GATE 2

TRAILER
STAGING AREA

BREAK TRAILER

GATE 1
(EXIT)

SCALE

PESTICIDE CONTAINER
STORAGE BUILDING

SCALE HOUSE

PROPERTY LINE

LEGEND

- PROPERTY LINE
- GROUND SURFACE ELEVATION CONTOUR - 10-FOOT INTERVAL
- GROUND SURFACE ELEVATION CONTOUR - 2-FOOT INTERVAL
- FENCE
- TRAFFIC PATTERN - ENTRANCE TO SCALES
- TRAFFIC PATTERN - SCALES TO TRANSFER FACILITY
- TRAFFIC PATTERN - TRANSFER FACILITY TO EXIT

NOTE:

1. TOPOGRAPHIC MAP DEVELOPED BY GEODATA CORPORATION OF ZEBULON, NC USING PHOTOGRAMETRIC METHODS FROM AERIAL PHOTOGRAPHY FLOWN ON FEBRUARY 5, 2007.
2. TOPOGRAPHIC MAP UPDATED WITH GROUND SURVEY BY BATEMAN CIVIL SURVEY COMPANY, PC OF HOLLY SPRINGS, NC ON OCTOBER 26, 2008.

GRAPHIC SCALE

100 0 50 100

(IN FEET)

DATE:	FEB. 2014
DRAWN BY:	BTR
CHECKED BY:	
SCALE:	1" = 100'
PROJECT NUMBER:	1054-13-277A
DRAWING NUMBER:	B-2311

S&ME
WWW.SMEINC.COM

SITE PLAN & TRAFFIC PATTERN

PERMIT APPLICATION EDGECOMBE CO. TRANSFER FACILITY
TARBORO, NORTH CAROLINA

FIGURE NO.

3

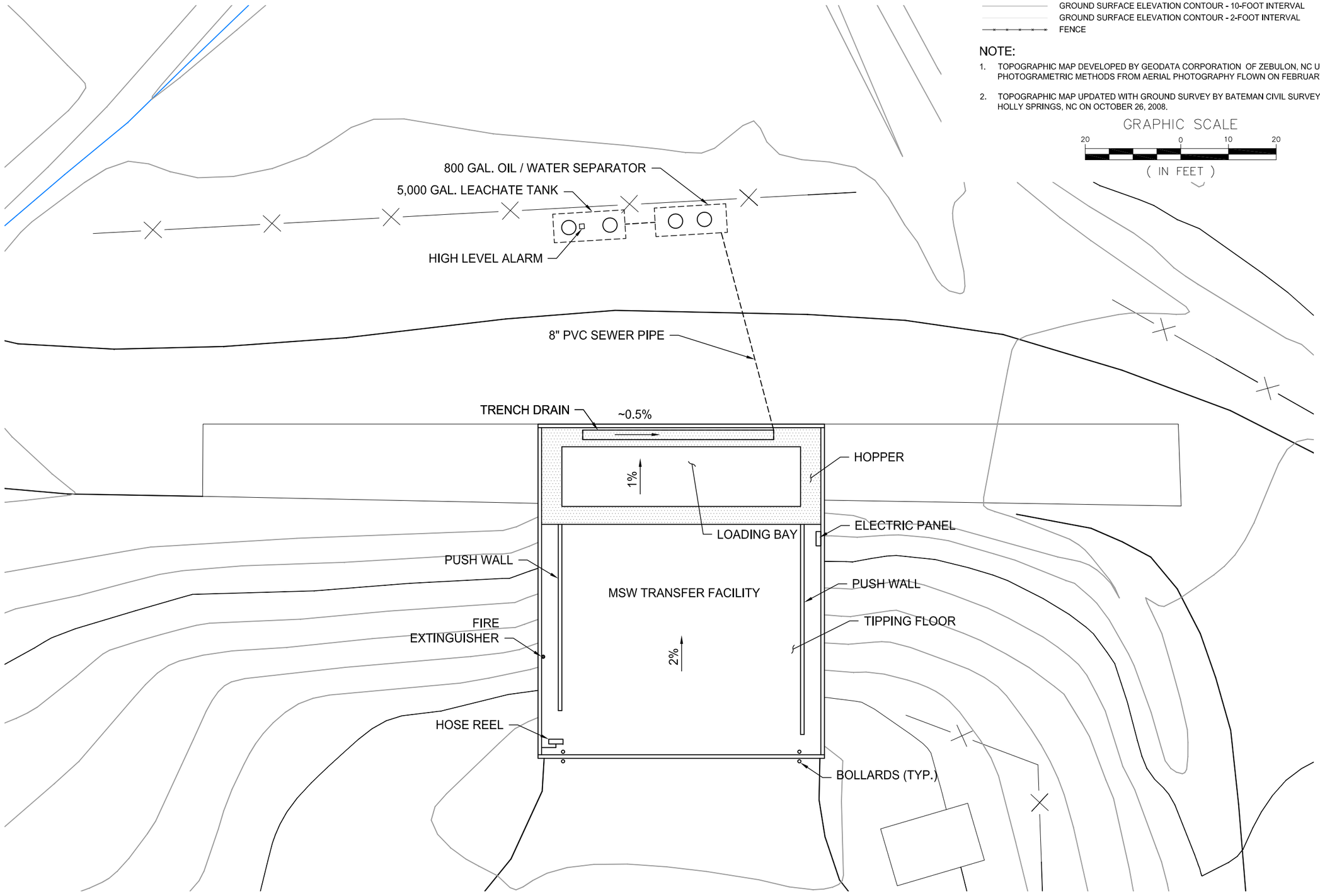

LEGEND

- PROPERTY LINE
- GROUND SURFACE ELEVATION CONTOUR - 10-FOOT INTERVAL
- GROUND SURFACE ELEVATION CONTOUR - 2-FOOT INTERVAL
- FENCE

NOTE:

1. TOPOGRAPHIC MAP DEVELOPED BY GEODATA CORPORATION OF ZEBULON, NC USING PHOTOGRAMETRIC METHODS FROM AERIAL PHOTOGRAPHY FLOWN ON FEBRUARY 5, 2007.
2. TOPOGRAPHIC MAP UPDATED WITH GROUND SURVEY BY BATEMAN CIVIL SURVEY COMPANY, PC OF HOLLY SPRINGS, NC ON OCTOBER 26, 2008.

GRAPHIC SCALE

20 0 10 20

(IN FEET)

DATE: FEB. 2014	DRAWN BY: BTR	CHECKED BY:
SCALE: 1" = 20'	PROJECT NUMBER: 1054-13-277A	DRAWING NUMBER: B-2312

S&ME
WWW.SMEINC.COM

TRANSFER FACILITY PLAN

PERMIT APPLICATION EDGECOMBE CO. TRANSFER FACILITY
TARBORO, NORTH CAROLINA

FIGURE NO.
4

APPENDIX I

(WASTE SCREENING AND ACCEPTANCE PROGRAM SAMPLE FORMS)

EDGECOMBE COUNTY SOLID WASTE FACILITY
TARBORO, NORTH CAROLINA

PRE-ACCEPTANCE AGREEMENT

DATE _____ TIME _____ WEIGH BILL _____

CLERK OR RECEIVING AGENT _____

CUSTOMER NAME/NUMBER OR IDENTIFICATION _____

VEHICLE LICENSE _____ STATE _____

WASTE DESCRIPTION (check ALL that apply)

RESIDENTIAL _____ COMMERCIAL _____ INDUSTRIAL _____

INSTITUTIONAL _____ YARD TRIMMINGS _____ SPECIAL _____

SPECIAL DESCRIPTION _____

TOTAL WEIGHT _____

WEIGHT OF VEHICLE (TARE WEIGHT) _____

WEIGHT OF WASTE DELIVERED _____

HAULER AGREES AND WARRANTS THAT HE/SHE IS DELIVERING SOLID WASTE ONLY FOR THIS LOAD AND ANY SUBSEQUENT LOADS TO THIS FACILITY. HAULER DOES HEREBY INDEMNIFY THE FACILITY OPERATOR FOR DAMAGES CAUSED BY THE DELIVERY OF ANY HAZARDOUS/TOXIC OR OTHERWISE UNACCEPTABLE MATERIAL.

_____

DRIVERS SIGNATURE

(SOURCE: SWANA)

EDGECOMBE COUNTY SOLID WASTE FACILITY
TARBORO, NORTH CAROLINA

DETAILED SCREENING REPORT

WASTE SOURCE _____
ADDRESS _____
_____
_____
_____

PROBABLE [ ] SUSPECTED [ ] CONFIRMED [ ]

WASTE HAULER _____
ADDRESS _____
_____
_____
_____

DRIVER'S NAME _____
DETAIL _____
_____
_____

NOTIFIED:

WASTE SOURCE [ ] HAULING MANAGEMENT [ ] SITE MANAGEMENT [ ]

STATE [ ] FEDERAL [ ]

NAME _____

WITNESS (IF ANY) _____

DATE _____ TIME _____ AM PM

ACTION REQUIRED:

SOURCE: SWANA

EDGECOMBE COUNTY SOLID WASTE FACILITY TARBORO, NORTH CAROLINA WASTE SCREENING CHECK LIST	YES	NO
CONTAINERS		
FULL	____	____
PARTIALLY FULL	____	____
EMPTY	____	____
CRUSHED	____	____
PUNCTURED	____	____
POWDERS/DUSTS		
IDENTIFIED	____	____
UNKNOWN	____	____
MATERIAL SATURATED	____	____
LABEL FOR HAZARDOUS MATERIAL	____	____
ODOR/FUMES		
STRONG	____	____
FAINT	____	____
SUBSTANTIAL HEAT COMING FROM ANY MATERIAL	____	____
ITEMS FOUND		
BATTERIES	____	____
OIL	____	____
BIOMEDICAL	____	____
RADIOACTIVE	____	____
ASHES/RESIDUE	____	____
SOD/SOIL	____	____
OTHER	____	____
(CHECK ALL THAT APPLY)		

SOURCE: SWANA

APPENDIX II

(CITY OF ROCKY MOUNT NON-SEPTAGE DISCHARGE PERMIT)

Part I:

TEMPORARY Non-Septage Disposal Permit # 20130104
To: Edgecombe County Transfer Station

The City of Rocky Mount (City) agrees to allow the discharge of Non-Septage wastewaters from Edgecombe County, collected as stated below, into the Tar River Regional Wastewater Treatment Facility; herein "WWTP", at the designated disposal site at the WWTP located at 3031 Treatment Plant Road on Highway 97 or as designated by WWTP Management.

Permit for disposal of:

Water from trucks carrying municipal solid waste (leachate per permit application). Maximum discharge not to exceed 5,000 gallons which is the capacity of the leachate storage tank.
Note: This permit does NOT allow discharge of the oil and water separator. Oil contents in the oil and water separator must be monitored periodically and disposed of separately.

Although this wastewater is Non-Septage, ***Edgecombe County*** must comply with Septage Hauler requirements and the terms of this Permit:

1. The customer and Hauler must follow the City's Rules for Septage Haulers. These rules define the requirements for discharging wastewater into the WWTP.
2. **Only** the wastewater described above is allowed. A sample may be collected from each load and submitted to the laboratory for analyses. Should discharge and/or results indicate a problem, the customer and Hauler will be contacted immediately and not allowed to discharge again until issue is resolved.
3. The City will perform monitoring. Should the City accrue monitoring charges for any parameters, these monitoring charges shall be billed by the City to Edgecombe County. Payment of these charges is required as a condition of continued compliance with this permit.
4. All wastewater shall meet the Sewer Use Ordinance restrictions for pH, flammability, metals, toxic and hazardous wastes, or any other prohibited materials.

Should these restrictions be violated, penalties will be imposed which may include fines and/or loss of dumping/discharge privileges.

5. Edgecombe County will be billed a minimum handling and surcharge recovery fee currently set at **$ 125.00** per discharge event for the duration of this permit to be re-evaluated at time of permit renewal (Reference City of Rocky Mount Administrative Policy X.9.3 effective 7/1/13 and applies to maximum of 5,000 gallons)
6. **Edgecombe County is to explore options to reduce the need for future discharge of such materials.**
7. **For each discharge event, Edgecombe County is to contact the facility prior to discharge of material.** Each time wastewater is to be discharged, a City form shall be completed by the Hauler **PRIOR** to discharge that identifies the type of wastewater to be discharged and volume discharged. The Hauler shall coordinate with WWTP Operations Staff to obtain discharge instructions. The original form will remain at the WWTP; the driver shall remove the carbon copy of the form for his records.

This permit shall become effective:
January 1, 2014
(originally issued January 1, 2013)
This permit and the authorization to discharge shall expire at midnight on:
December 31, 2014.

L Kirkland Bass — 12/30/2013

Kirkland Bass, Superintendent of Operations
City of Rocky Mount

Date

Part II: MONITORING REQUIREMENTS:

Effective immediately and lasting until the expiration of this permit, the permittee is authorized to discharge water from trucks carrying municipal solid waste (leachate per permit application). Maximum discharge is not to exceed 5,000 gallons which is the capacity of the leachate storage tank. This discharge shall be monitored as specified below. Water/Wastewater shall be discharged in accordance with the City of Rocky Mount's Sewer Use Ordinance.

Parameter	Sample Type
CBOD	grab
TSS	grab
Ammonia	grab
Total Nitrogen	grab
Total Phosphorous	grab
++pH	grab
Arsenic	grab
Cadmium	grab
Chromium	grab
Copper	grab
Lead	grab
Nickel	grab
Zinc	grab
Silver	grab
Cyanide	grab
Oil & Grease	grab

Part III: General Conditions of this Permit

1. Duty to Comply

The permittee must comply with all conditions of this permit. Any permit noncompliance constitutes a violation of the City of Rocky Mount's Sewer Use Ordinance and may constitute a violation of state and/or federal regulations. Therefore any permit noncompliance is grounds for possible enforcement action.

2. Duty to Mitigate - Prevention of Adverse Impact

The permittee shall take all reasonable steps to minimize or prevent any discharge in violation of this permit which has a reasonable likelihood of adversely affecting human health, the POTW, the waters receiving the POTW's discharge, or the environment.

3. Availability of Records and Reports

The permittee shall retain records of collection of all wastewater to be discharged to the City's WWTP. All records that pertain to matters that are subject to any type of enforcement action shall be retained and preserved by the permittee until all enforcement activities have concluded and all periods of limitation with respect to any and all appeals have expired.

Except for data determined to be confidential under the City of Rocky Mount's Sewer Use Ordinance and state and federal pretreatment regulations, all reports prepared in accordance with terms of this permit shall be available for public inspection at the City of Rocky Mount.

4. Duty to Provide Information

The permittee shall furnish to the Director of Water Resources or his/her designees, within a reasonable time, any information which the Director, his/her designee may request to determine whether cause exists for modifying, revoking and reissuing, or terminating this permit or to determine compliance with this permit. The permittee shall also furnish, upon request, copies of records required to be kept by this permit.

5. Civil and Criminal Liability

Nothing in this permit shall be construed to relieve the permittee from civil or criminal penalties for noncompliance.

6. Federal and/or State Laws

Nothing in this permit shall be construed to preclude the institution of any legal action or relieve the permittee from any responsibilities, liabilities, or penalties established pursuant to any applicable Federal and/or State law or regulation.

7. Penalties

The Sewer Use Ordinance of the City of Rocky Mount and state law (NCGS 143-215.6A) provides that any person who violates a permit condition is subject to a civil penalty not to exceed $25,000 dollars per day of such violation.

Under state law (NCGS 143-215.6B), under certain circumstances it is a crime to violate terms, conditions, or requirements of permits. It is a crime to knowingly make any false statement, representation, or certification in any record or other document submitted or required to be maintained under this permit, including monitoring reports or reports of compliance or noncompliance. These crimes are enforced at the prosecutorial discretion of the local District Attorney.

8. Transferability

This permit shall not be reassigned or transferred or sold to a new owner, new user, different premises, or a new or changed operation without approval of the City of Rocky Mount.

9. Permit Modification, Revocation, Termination

This permit may be modified, revoked and reissued or terminated with cause in accordance to the requirements of the City of Rocky Mount's Sewer Use Ordinance.

10. Re-Application for Permit Renewal

The permittee is responsible for filing an application for reissuance of this permit at least 30 days prior to its expiration date.

APPENDIX III

(ZONING APPROVAL)

Edgecombe County

Planning: (252) 641-7803
Inspections: (252) 641-7802

E-911: Addressing: (252) 641-4802
Fax: (252) 641-6913

Post Office Box 10 • 201 Saint Andrew Street
Tarboro, North Carolina 27886

January 31, 2014

S&ME, Inc.
3201 Spring Forest Road
Raleigh, North Carolina 27616

Attention: Mr. Sam Watts

Reference: Zoning Approval Letter for Edgecombe County Transfer Station

Dear Mr. Watts:

The Edgecombe County Solid Waste Transfer Station is located on Colonial Road in Tarboro, North Carolina. The property is zoned AR-30, where lot sizes are to be a 30,000 square foot minimum. The AR-30 zoning district does allow solid waste disposal and landfill activities. The site is in compliance with all zoning regulations (9-1.2) and development standards (11-4.79).

If you have any questions or concerns please contact me at (252) 641-7803.

Sincerely,

Brian D. Hassell
Edgecombe County Planning Director

APPENDIX IV

(EMERGENCY AND CONTINGENY PLAN)

EMERGENCY AND CONTINGENCY PLAN
EDGECOMBE COUNTY TRANSFER FACILITY
TARBORO, NORTH CAROLINA

S&ME Project No. 1054-13-277A

Prepared for:
Edgecombe County
P.O. Box 10
Tarboro, North Carolina 27886

Prepared by:
S&ME, Inc.
3201 Spring Forest Road
Raleigh, North Carolina 27616

May 2014

TABLE OF CONTENTS

1. INTRODUCTION 1
2. EMERGENCY CONTACTS 1
3. GENERAL EMERGENCIES, ACCIDENTS AND INJURIES 2
4. HAZARDOUS AND LIQUID WASTE DETECTION PROGRAM 3
5. HAZARDOUS MATERIAL INCIDENT PLAN 4
6. FIRES AND HOT LOADS 6
7. EXPLOSIONS 8
8. BOMB THREAT 9
9. ARMED ROBBERY 10
10. CONTINGENCIES 11
10.1 Civil Disturbance 11
10.2 Hazardous Weather 11
10.3 Equipment Failure 11
10.4 Non-Conforming Waste Delivery 12
10.5 Unusual Traffic Patterns 12
10.6 Long Term Power Outages 12

APPENDICES
Appendix I Bomb Threat Form
Appendix II Solid Waste Management Facility Fire Occurrence Notification Form

EMERGENCY AND CONTINGENCY PLAN
EDGECOMBE COUNTY TRANSFER FACILITY
(PERMIT # 33-02T)
TARBORO, NORTH CAROLINA

1. INTRODUCTION

This plan was developed to help provide maximum protection for the staff and citizens using the Edgecombe County Transfer Facility. Facility personnel shall familiarize themselves with the basic content of this plan, and then keep it readily available for quick reference in time of emergency. This Emergency and Contingency Plan identifies foreseeable situations and provides procedures for responding to the following:

- General Emergencies, Accidents, and Injuries;
- Hazardous Spills;
- Fires and Hot Loads;
- Explosions;
- Bomb Threats;
- Hazardous Weather;
- Civil Disturbance;
- Armed Robbery;
- Equipment Failure;
- Non-conforming Waste Delivery;
- Unusual Traffic Patterns; and
- Long Term Power Outages.

2. EMERGENCY CONTACTS

Effective communications are essential to ensure that an emergency is handled immediately and properly. Edgecombe County Transfer Facility and construction and demolition (C&D) landfill equipment operators and office personnel should receive instructions regarding this Emergency and Contingency Plan. All personnel have access to the offices, which are equipped with a telephone. The employee making the alarm shall contact the Emergency Coordinator or Transfer Facility personnel stating the type of emergency and the location. The following telephone numbers shall be posted in the gatehouse and transfer station office for easy access and proximity to a telephone.

Fire	911
Ambulance	911
Sheriff	911
Mike Cummings	(252) 827-4253: Office
Operations Manager/Emergency Coordinator	(252) 813-3945: Mobile

Mark Rogerson Edgecombe County Deputy Fire Marshall	(252) 641-7806 (252) 813-9647: Emergency only
Butch Beach Edgecombe Co. Emergency Services Director	(252) 641-7843: Office (252) 813-0739: Mobile
State Emergency Response	(800) 858-0368
N.C. Division Emergency Management	(800) 858-0368: 24-Hour Operation
Ben Barnes NCDENR Environmental Senior Specialist	(252) 236-4453: Office (919) 621-3680: Mobile
National Region IV E.P.A. Emergency Response	(800) 241-1754

The Operations Manager, Mike Cummings, is designated as the site Emergency Coordinator. In his absence, and to assure on site coordination of response in an emergency, the following personnel will be designated as Emergency Coordinator in his absence.

Gloria Mosely, Office Manager	(252) 827-4253: Office (252) 544-1364: Mobile

3. GENERAL EMERGENCIES, ACCIDENTS AND INJURIES

The procedures identified in this section are to be followed in any emergency not specifically addressed in other portions of this plan.

The first employee detecting the emergency should:

1. Notify the Emergency Coordinator by verbal communication, telephone, radio, or other agreed alarm. If the Emergency Coordinator is unavailable, notify the designated Emergency Coordinator. Describe the location and emergency and any need for immediate assistance for first aid or emergency personnel.

2. Give emergency first aid, if properly trained, to the injured.

Until the Emergency Coordinator arrives, the employees present should:

1. Direct site personnel, site visitors, and customers to evacuate the area if there is an imminent risk to their personal safety.

2. Give emergency first aid to the injured, if properly trained. If the injury is moderate (i.e., broken bone, minor laceration, or burn) or severe, notify **911**.

The Emergency Coordinator:

1. Investigates the emergency to determine its seriousness. Initiates the following steps:

   A. Activates internal alarms or communications to notify all personnel, visitors, and customers on the site of an imminent or actual emergency situation. If evacuation is required, directs all personnel, visitors, and customers to a safe area. The Emergency Coordinator will designate an employee to ensure all personnel, visitors, and customers are accounted for. If an evacuation is required, no one except responding emergency teams will be allowed onto the site.
   B. Seeks medical attention for injured persons, if this has not already been performed.
   C. Directs personnel to call the necessary emergency agencies for assistance, or makes the calls personally. The notified agencies must be clearly informed of the location, nature of emergency, and person reporting the emergency.
   D. Directs trained employees to begin to eliminate or minimize the emergency condition.
   E. If the emergency presents a potential threat to surrounding areas, the Emergency Coordinator will immediately contact local authorities. The Emergency Coordinator will assist authorities in determining the need for an area evacuation, but the final decision to evacuate the area is the responsibility of the local authorities.

2. After the emergency is contained, the Emergency Coordinator, in collaboration with the County Manager, will determine if the site must be closed until clean-up is complete and potential hazards are eliminated, and the extent of any damages, especially with regard to long range hazards.

3. Ensures that all equipment used to contain the emergency is cleaned and restored to pre-accident conditions.

4. HAZARDOUS AND LIQUID WASTE DETECTION PROGRAM

In order to comply with EPA Subtitle C, requirements, to prevent the disposal of hazardous and liquid waste in Subtitle D landfills, such as the Edgecombe County Landfill, the following steps shall be taken.

1. Landfill personnel shall receive training to recognize hazardous and liquid waste.

2. If hazardous waste is detected before it is dumped from a waste hauling vehicle, the driver will be informed that the waste cannot be disposed of at the landfill.

   Information concerning the source of the waste, the type and quantity of the waste, and the waste hauler should be collected and communicated to the North Carolina Department of Environment and Natural Resources (NCDENR), Division of Solid Waste Management.

3. Random inspections will be conducted regularly in accordance with **Section 2.4** of the Operation Plan for the Edgecombe County Transfer Facility.

4. A record shall be kept at the transfer facility showing the date and time of each inspection, the name of the hauler, the truck and container number, the driver's name, source of each load inspected, and whether any hazardous or liquid waste was detected.

5. HAZARDOUS MATERIAL INCIDENT PLAN

The acceptance and disposal of liquid waste or hazardous material in the Edgecombe County Transfer Facility or C&D Landfill is strictly prohibited by Federal and State Laws, violators will be prosecuted to the full extent of law. This plan is established to handle any inadvertent dumping or spilling of a hazardous material through accident, ignorance, or surreptitiously. Edgecombe County's job is that of "THE FIRST RESPONDER". If Edgecombe County personnel become aware of any material that they believe may be hazardous by suspicion, label, smell, reaction, fire or explosion they must "SECURE THE SCENE".

The first employee discovering any human remains, possible criminal activity, or material that they suspect may be a liquid or hazardous should:

1. Notify the Emergency Coordinator by verbal communication, telephone, radio, or other agreed alarm. If the Emergency Coordinator is unavailable, notify the designated Emergency Coordinator. Describe the location and situation and any need for immediate assistance for first aid or emergency.

2. Notify the scale operator to call **911**, and give site location of 2797 Colonial Road (S.R. 1601), Tarboro, North Carolina, and report the discovery of human remains, suspected crime scene, or a possible hazardous material incident. In addition, the scale operator should hold up traffic.

3. Give emergency first aid, if properly trained, to the injured.

Until the Emergency Coordinator arrives, the employees present should:

1. Shut down scales, block all necessary roads so others may not enter, and go to Gate 3 to direct traffic, clearing for emergency personnel.

2. Direct site personnel, site visitors, and customers to evacuate the area.

3. Attempt to rescue ONLY if possible without endangering additional lives, considering carefully the risk of explosion, fire, contamination, or exposure.

4. Give emergency first aid to the injured, if properly trained.

5. Restrict onlookers including the media.

The Edgecombe County Emergency Services is responsible for identifying any materials as hazardous and to affect the proper disposition. The Edgecombe County Sheriff's Department is responsible for any human remains or criminal activity. If the suspected material can be identified as coming from a particular hauler and driver, the transfer facility staff should make this known since this may aid in identifying the material and the source. Edgecombe County Emergency Services and Sheriff's Department will advise transfer facility staff to any assistance they can render and what authorities to notify.

The Emergency Coordinator:

1. Investigates the emergency to determine its seriousness. Initiates the following steps:

    A. Activates internal alarms or communications to notify all personnel, visitors, and customers on the site of an imminent or actual emergency situation. If evacuation is required, directs all personnel, visitors, and customers to a safe area. The Emergency Coordinator will designate an employee to ensure all personnel, visitors, and customers are accounted for. If an evacuation is required, no one except responding emergency teams will be allowed onto the site.
    B. Seeks medical attention for injured persons, if this has not already been performed.
    C. Directs personnel to call the necessary emergency agencies for assistance, or makes the calls personally. The notified agencies must be clearly informed of the location, nature of emergency, and person reporting the emergency.
    D. Directs trained employees to begin to eliminate or minimize the emergency condition.
    E. If the emergency presents a potential threat to surrounding areas, the Emergency Coordinator will immediately contact local authorities. The Emergency Coordinator will assist authorities in determining the need for an area evacuation, but the final decision to evacuate the area is the responsibility of the local authorities.

2. Hazardous material shall be contained temporarily by trained personnel with proper equipment until absorbent can be placed or until proper containers are available. The saturated absorbent or containers will then be disposed of at a suitable facility for hazardous waste as determined by the Edgecombe County Emergency Services.

3. After the emergency is contained, the Emergency Coordinator, in collaboration with the County Manager, will determine if the site must be closed until clean-up is complete and potential hazards are eliminated, and the extent of any damages, especially with regard to long range hazards.

4. Ensures that all equipment used to contain the emergency is cleaned and restored to pre-accident conditions.

5. Notifies NCDENR within 24 hours of the incident and shall include the following information:

    - Name and telephone number of Emergency Coordinator;
    - Location and extent of spill;
    - Date and time of spill;
    - Type and quantity of materials involved;
    - Extent of injuries (if any);
    - Potential hazards or impacts to human health and the environment;
    - Names of personnel, visitors, or customers involved (if known);
    - Probable cause (if known) and means to prevent future occurrences;
    - Estimated amount of contaminated material removed;
    - Local responding agencies' primary coordinator name and telephone number; and
    - Additional pertinent information.

6. FIRES AND HOT LOADS

The procedures identified in this section are to be followed in the event of a fire at the facility.

The first employee detecting the fire should:

1. Notify the Emergency Coordinator by verbal communication, telephone, radio, or other agreed alarm. If the Emergency Coordinator is unavailable, notify the designated Emergency Coordinator. Describe the location and extent of the fire and any need for immediate assistance for first aid or fire containment.

2. Notify the scale operator to call **911**, and give site location of 2797 Colonial Road (S.R. 1601), Tarboro, North Carolina, and report the fire. In addition, the scale operator should hold up traffic.

3. Gives emergency first aid, if properly trained, to the injured.

The Transfer Facility Operator:

1. Unhooks yard dog from trailer leaving trailer in pit and move yard dog to a safe location.

2. Begins hosing fire as needed ONLY if possible without endangering additional lives, consider carefully the risk of explosion, contamination, or exposure.

Until the Emergency Coordinator arrives, the employees present should:

1. Shut down scales, block all necessary roads so others may not enter, and go to Gate 3 to direct traffic, clearing for Fire Department.

2. Direct site personnel, site visitors, and customers to evacuate the area.

3. Attempt to rescue ONLY if possible without endangering additional lives, considering carefully the risk of explosion, fire, contamination, or exposure.

4. Give emergency first aid to the injured, if properly trained.

5. Restrict onlookers including the media.

The Emergency Coordinator:

1. Investigates the emergency to determine its seriousness. Initiates the following steps:

   A. Activates internal alarms or communications to notify all personnel, visitors, and customers on the site of an imminent or actual emergency situation. If evacuation is required, directs all personnel, visitors, and customers to a safe area. The Emergency Coordinator will designate an employee to ensure all personnel, visitors, and customers are accounted for. If an evacuation is required, no one except responding emergency teams will be allowed onto the site.
   B. Seeks medical attention for injured persons, if this has not already been performed.
   C. Directs personnel to call the necessary emergency agencies for assistance, or makes the calls personally. The notified agencies must be clearly informed of the location, nature of emergency, and person reporting the emergency.
   D. Directs trained employees to begin to eliminate or minimize the emergency condition.
   E. If the emergency presents a potential threat to surrounding areas, the Emergency Coordinator will immediately contact local authorities. The Emergency Coordinator will assist authorities in determining the need for an area evacuation, but the final decision to evacuate the area is the responsibility of the local authorities.

2. After fire is extinguished, the Emergency Coordinator, in collaboration with the County Manager, will determine if the site must be closed until all waste has been cleaned up and all potential dangers of further accidents have been eliminated. No burned material will be incorporated into another material until it is determined that the fire is completely extinguished.

3. Ensures that all equipment used to contain the fire is cleaned and restored to pre-accident conditions.

4. Notifies the hauler (if known) within 24 hours of delivery to explain the dangers of delivering hot loads to facility.

5. Notifies NCDENR within 24 hours with written notification provided within 15 days on the *Solid Waste Management Facility Fire Occurrence Notification Form* included in **Appendix II.**

7. EXPLOSIONS

An explosion could be the result of hazardous materials and would therefore be subject to the same reporting and emergency procedures associated with **Section 5**, Hazardous Materials Incident Plan.

The first employee detecting an explosion should:

1. Notify the Emergency Coordinator by verbal communication, telephone, radio, or other agreed alarm. If the Emergency Coordinator is unavailable, notify the designated Emergency Coordinator. Describe the location and damage caused by the explosion and any need for immediate assistance for first aid or fire containment.

2. Notify the scale operator to call **911**, and give site location of 2797 Colonial Road, and report the explosion. In addition, the scale operator should hold up traffic.

3. Give emergency first aid, if properly trained, to the injured.

The Emergency Coordinator:

1. Investigates the emergency to determine its seriousness. Initiates the following steps:

    A. Activates internal alarms or communications to notify all personnel, visitors, and customers on the site of an imminent or actual emergency situation. If evacuation is required, directs all personnel, visitors, and customers to a safe area. The Emergency Coordinator will designate an employee to ensure all personnel, visitors, and customers are accounted for. If an evacuation is required, no one except responding emergency teams will be allowed onto the site.
    B. Seeks medical attention for injured persons, if this has not already been performed.
    C. Directs personnel to call the necessary emergency agencies for assistance, or makes the calls personally. The notified agencies must be clearly informed of the location, nature of emergency, and person reporting the emergency.
    D. If the explosion presents a potential threat to surrounding areas, the Emergency Coordinator will immediately contact local authorities. The Emergency Coordinator will assist authorities in determining the need for an area evacuation, but the final decision to evacuate the area is the responsibility of the local authorities.

2. After the explosion is contained, the Emergency Coordinator, in collaboration with the County Manager, will determine if the site must be closed until clean-up is complete and potential hazards are eliminated, and the extent of any damages, especially with regard to long range hazards.

3. Ensures that all equipment used to contain the explosion is cleaned and restored to pre-accident conditions.

4. Notify NCDENR within 24 hours with written notification provided within 15 days, and include the following information:

    - Name and telephone number of Emergency Coordinator;
    - Location and extent of explosion;
    - Date and time of explosion;
    - Type and quantity of materials involved;
    - Extent of injuries (if any);
    - Potential hazards or impacts to human health and the environment;
    - Names of personnel, visitors, or customers involved (if known);
    - Probable cause (if known) and means to prevent future occurrences;
    - Local responding agencies' primary coordinator name and telephone number, if applicable; and
    - Additional pertinent information.

8. BOMB THREAT

A bomb threat may be received by various means, but will usually be by telephone. Most threats are intended to disrupt normal daily activities. They cost money, interfere with facility operations, and endanger lives.

DO NOT TREAT BOMB THREATS AS JOKES!

The person receiving the bomb threat shall do the following:

1. OBTAIN INFORMATION: The recipient of the call will attempt to obtain information from the caller using the check list located beside each phone.

2. NOTIFY THE EMERGENCY COORDINATOR: The recipient of the call will immediately notify the Emergency Coordinator but no one else.

3. NOTIFY LAW ENFORCEMENT: The Emergency Coordinator will immediately notify law enforcement officials. **Phone 911**.

4. EVACUATE THE BUILDING: all employees will evacuate the building and site immediately in accordance with the fire evacuation plan.

5. CONDUCT A LIMITED SEARCH: The Emergency Coordinator will decide whether his staff will conduct a limited search for suspicious items.

6. NOTIFY ALL PERSONNEL ON SITE: The Emergency Coordinator will notify and evacuate personnel and customers on site by word of mouth.

7. COUNT HEADS: The Emergency Coordinator will check to see if all personnel and customers are accounted for.

8. MISSING PERSONS: The Emergency Coordinator will notify first arriving emergency agency if someone is missing.

9. STAY IN SAFE AREA: Emergency Coordinator and personnel will not return to any building until it has been declared safe.

If an unusual box or item is found, notify Emergency Coordinator.

9. ARMED ROBBERY

The Edgecombe County Transfer Station does not maintain petty cash, however if an employee is involved in an attempted armed robbery, the following procedures shall be followed:

1. Do not attempt to thwart or resist robber.

2. Do not engage in verbal exchanges with the robber, except as necessary.

3. Hand over all personal monies immediately. Your well being is worth infinitely more than the monies in your pocket.

4. Observe and memorize as many details as possible regarding the robber and the get-a-way vehicle including:

    - Height and weight of the assailant.
    - Sex and race
    - Distinguishing marks or birthmarks
    - Speech pattern or accent
    - Physical anomalies such as a limp
    - Color and type of clothing
    - Make, color, and model of vehicle
    - License number if possible

5. Notify the Emergency Coordinator immediately.

The Emergency Coordinator:

1. Calls law enforcement agency.

2. Reports any destruction of property, thefts, or assaults to law enforcement.

3. Completes a written report within 24 hours of the incident which will include the following information:

    - Name and telephone number of Emergency Coordinator;
    - Date and time of armed robbery;
    - Extent of injuries (if any);
    - Names of personnel, visitors, or customers involved (if known);
    - Any means to prevent future occurrences;
    - Local responding agencies' primary coordinator name and telephone number, if applicable; and
    - Additional pertinent information.

10. CONTINGENCIES

10.1 Civil Disturbance

A civil disturbance is any set of circumstances that in the judgment of the Operations Manager would cause a disruption of normal work assignments and would potentially jeopardize the safety of employees.

1. Call Edgecombe County Sheriff's Department at (252) 641-7911.

2. If it is an emergency, **call 911**.

10.2 Hazardous Weather

When the weather conditions are sufficiently hazardous to warrant limited activities at the Transfer Station, the Emergency Coordinator will advise personnel whether to report to work or not through word of mouth, TV, and/or radio. In the event of severe weather conditions during normal operating hours, the Emergency Coordinator will notify all personnel and customers of actual or imminent emergency situation and relocate personnel and customers if deemed necessary to ensure the safety of all.

10.3 Equipment Failure

The first employee detecting equipment failure shall notify the Operations Manager immediately. The Operations Manager shall:

1. Use back up equipment which includes back hoe and loader.

2. If back up equipment fails, contact vendors for rental equipment.

10.4 Non-Conforming Waste Delivery

The Edgecombe County Transfer Facility accepts municipal solid waste (MSW), excluding white goods, yard waste, tires, agricultural pesticide containers, containerized waste, and recyclables. The facility will not accept barrels and drums unless they are emptied, cleaned, and perforated sufficiently to ensure that no waste is contained in them. No hazardous or liquid waste shall be accepted at transfer station. If liquid or hazardous waste is discovered, **Section 5** of the Emergency and Contingency Plan shall be followed. If other waste that is not accepted by the facility is discovered, the material will be removed by the responsible party for disposal at an appropriate facility.

10.5 Unusual Traffic Patterns

The Edgecombe County Transfer Facility can accommodate unusual traffic patterns on-site. In the event of a waste hauler vehicle breakdown on-site, proper measures will be taken to ensure safety of all in coming and out going traffic. On-site equipment will be used as necessary to maintain the flow to the Transfer Facility and allow it to remain open.

10.6 Long Term Power Outages

The transfer facility design includes several skylights which provide sufficient natural light for normal operations. A generator is available to provide power to the scales to allow waste to continue to be received at the transfer facility. Power is not required to clean the facility. The leachate collection system is gravity fed and only requires power to operate the high level alarm on the leachate tank. During long term power outages, this tank will be checked regularly to prevent overflow conditions.

APPENDIX I

(BOMB THREAT FORM)

BOMB THREAT – THE CALL

- **DO NOT HANG UP!**
- **KEEP THE CONVERSATION GOING**
- **ATTEMPT TO GET THE FOLLOWING INFORMATION**

ASK:

Where is the bomb? _____

What time will it go off? _____

What kind of bomb is it? _____

Who are you? _____

Why is this going to happen? _____

CHECK:

Is the caller Male_____ ? Female _____ ?

Is there a Speech Impediment? _____

Is there an Accent? Describe _____

Any Background Noise? _____

NOTE:

Time of Call _____ Date of Call _____

<u>KEEP THE CONVERSATION GOING</u>

(THE LONGER THE CONVERSATION,
THE MORE CALLER MIGHT DISCLOSE)

APPENDIX II

(SOLID WASTE MANAGEMENT FACILITY FIRE OCCURRENCE NOTIFICATION FORM)

SOLID WASTE MANAGEMENT FACILITY
FIRE OCCURRENCE NOTIFICATION
NC DENR Division of Waste Management
Solid Waste Section

Notify the Section verbally within 24 hours and submit written notification within 15 days of the occurrence.
(If additional space is needed, use back of this form.)

NAME OF FACILITY: _____ PERMIT # _____

DATE AND TIME OF FIRE: _____ @ _____

HOW WAS THE FIRE REPORTED AND BY WHOM:

LIST ACTIONS TAKEN:

WHAT WAS THE CAUSE OF THE FIRE:

DESCRIBE AREA, TYPE, AND AMOUNT OF WASTE INVOLVED:

WHAT COULD HAVE BEEN DONE TO PREVENT THIS FIRE:

DESCRIBE PLAN OF ACTIONS TO PREVENT FUTURE INCIDENTS:

NAME: _____ TITLE: _____ DATE: _____

****

THIS SECTION TO BE COMPLETED BY SOLID WASTE SECTION REGIONAL STAFF

DATE RECEIVED _____

List any factors not listed that might have contributed to the fire or that might prevent occurrence of future fires:

FOLLOW-UP REQUIRED:

☐ NO ☐ PHONE CALL ☐ SUBMITTAL ☐ MEETING ☐ RETURN VISIT BY:_____ (DATE)

ACTIONS TAKEN OR REQUIRED:

Revised 6/8/09

APPENDIX V

(FACILITY INSPECTION FORM)

MONTHLY TRANSFER FACILITY INSPECTION CHECKLIST

Inspector _____

Signature _____ **Date** _____

Item	Deficient	If Yes, Describe	Initial and Date When Corrected
Building	Yes / No		
Foundations	Yes / No		
Retaining Walls	Yes / No		
Push Walls	Yes / No		
Fire Extinguishers	Yes / No		
Emergency Eyewash Station	Yes / No		
Tipping Floor	Yes / No		
Trash Deflectors	Yes / No		
Bollards			
Loading Bay	Yes / No		
Trench Drain	Yes / No		
Water Hose and Reel	Yes / No		
Lights and Outlets	Yes / No		
Electrical Panel	Yes / No		
Oil/Water Separator	Yes / No		
Leachate Tank	Yes / No		
Leachate Tank High Level Alarm	Yes / No		
Transfer Trailers	Yes / No		
Other	Yes / No		

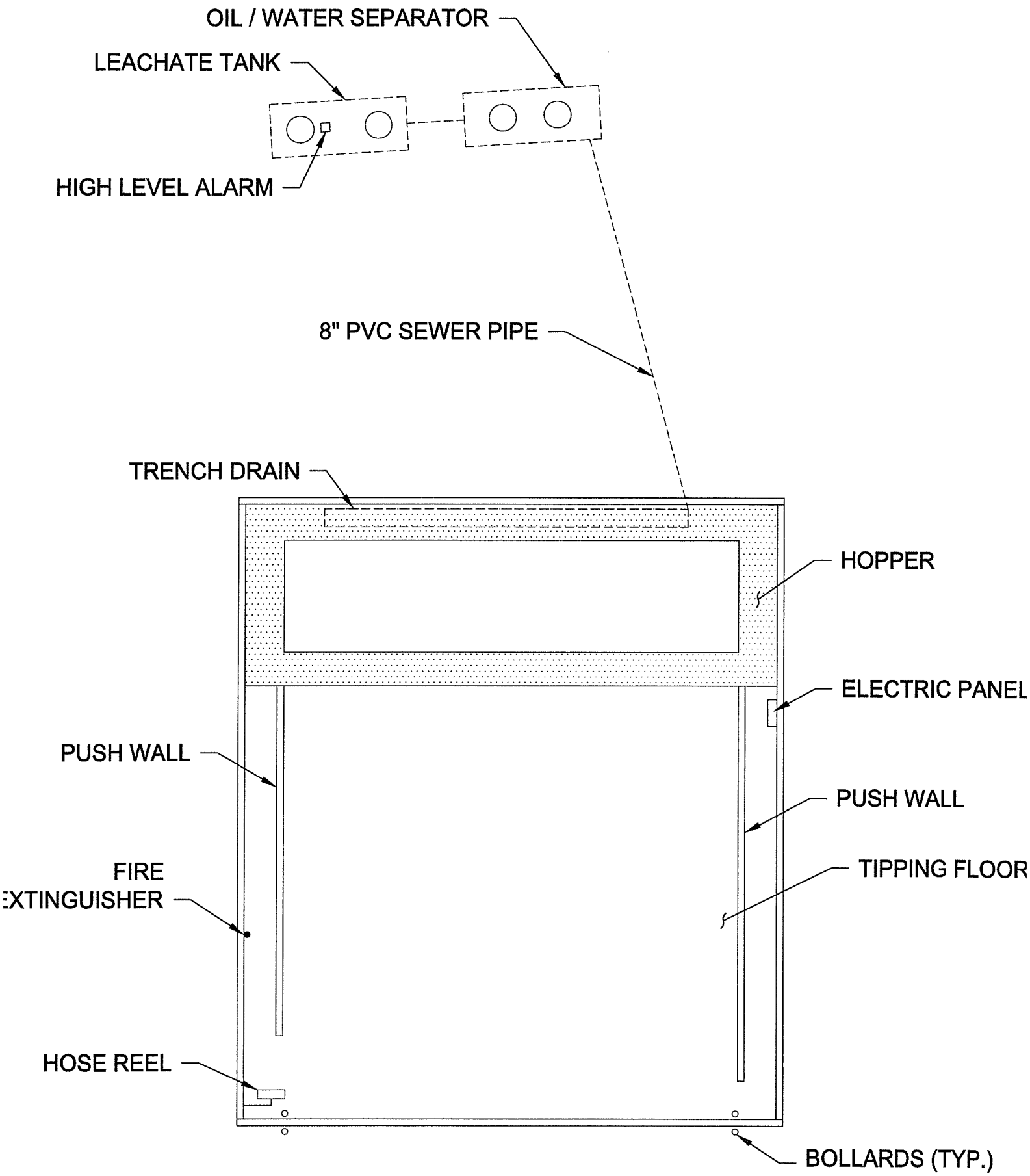
OIL / WATER SEPARATOR
LEACHATE TANK
HIGH LEVEL ALARM
8" PVC SEWER PIPE
TRENCH DRAIN
HOPPER
ELECTRIC PANEL
PUSH WALL
PUSH WALL
FIRE
EXTINGUISHER
TIPPING FLOOR
HOSE REEL
BOLLARDS (TYP.)

APPENDIX VI

(PROPERTY DEEDS)

4725-77-9941-00

NORTH CAROLINA

EDGECOMBE COUNTY

THIS DEED made and executed this the 5th day of January, 1979, by and between J. B. WEBB, JR. and wife, MARY S. WEBB, of Edgecombe County, North Carolina, parties of the first part, to EDGECOMBE COUNTY, a body politic and corporate of the State of North Carolina, Edgecombe County Courthouse, Tarboro, North Carolina 27886, party of the second part;

WITNESSETH:

That for and in consideration of the sum of Ten Dollars and other valuable considerations paid to the parties of the first part by the party of the second part, the receipt of which is hereby acknowledged, the said parties of the first part have given, granted, bargained and sold and do by these presents give, grant, bargain and sell, alien and convey unto the said party of the second part, its successors and assigns (but subject to the retention of the crop allotments and time limited possession of certain structures as hereinafter set forth), all of that certain tract or parcel of land lying and being situated in Number Eight Township, Edgecombe County, North Carolina, and containing 169.31 acres, more or less, and being more particularly described as follows:

Real Estate Excise Tax 254.00

STATE OF NORTH CAROLINA JAN 5 79 EDGECOMBE COUNTY

Beginning at a point, an existing concrete monument in the northern property line of the land of John I. Eagles (see deed in Book 745, at page 485, Edgecombe Public Registry) and the southeastern corner of the lands heretofore conveyed by the parties of the first part to Edgecombe County by deed recorded in Book 787, at page 315, Edgecombe Public Registry; thence along and with the eastern line of the said lands of Edgecombe County, North 9° 57' 24" East 1,536.71 feet to an existing iron pipe in Jerry's Creek, a corner with said lands of Edgecombe County, cornering; thence along and with the lands of the said Edgecombe County and down the said Jerry's Creek the following courses and distances: North 67° 59' 02" East 251.35 feet, South 53° 34' 08" East 553.45 feet, North 54° 16' 44" East 200.45 feet, South 80° 59' 57" East 277.35 feet and South 58° 31' 45" East 127.23 feet to the center of State Road 1601, cornering; thence South 13° 58' 28" West 20.00 feet, cornering; thence along and with the southern boundary of lands of Gladys C. Shelton Pitt (see Map Book 9, page 7, Edgecombe County Registry) South 88° 00' 49" East 4,105.59 feet, more or less, to Tar River through an existing iron pipe in the western bank of Tar River, cornering; thence down Tar River South 12° 42' 9" West 1,378.76 feet to a new concrete monument in the bank of said River, a corner with the lands of W. S. Clark & Sons, cornering; thence North 88° 11' 36" West 4,006.87 feet, more or less, to an existing iron pipe in said line; thence North 88° 11' 36" West 42.51 feet to the centerline of said State Road 1601, cornering; thence along and with the centerline of said State Road North 7° 52' 43" East 129.62 feet, cornering; thence South 78° 41' 00" West 31.77 feet to a new concrete monument; thence crossing a pond South 78° 41' 00" West 499.93 feet; thence North 84° 39' 00" West 736.55 feet to the point of beginning; containing 169.31 acres according to a map entitled, "Property

of J. B. Webb, Jr. and wife, Mary S. Webb, No. 8 Township, Edgecombe County, Near Old Sparta, North Carolina", By: Brown, Edwards & Miller, Inc., Surveying - Engineering, 225 N. Bennett St., Southern Pines, N. C., Dated Dec. 15, 1978, to be recorded in the Edgecombe Public Registry, and reference is made to said map for further description. The same being all of the property conveyed by a deed from John I. Eagles, et ux, et al, to J. B. Webb, Jr. and William C. Webb recorded in Book 687, at page 273 of the Edgecombe County Public Registry, the interest of the said W. C. Webb in said lands having been conveyed by W. C. Webb and wife to J. B. Webb, Jr. and wife, Mary S. Webb, by deed recorded in Book 759, at page 450 of said Registry, except the portion thereof heretofore conveyed by the parties of the first part to the party of the second part by deed recorded in Book 787, at page 315 of the Edgecombe Public Registry, and reference is hereby made to said deeds and the map hereinbefore referred to for further and more particular description.

TO HAVE AND TO HOLD the above described land together with all rights, privileges and appurtenances thereto belonging, or in anywise thereto appertaining, unto the said party of the second part, its successors and assigns, in fee simple.

The parties of the first part expressly retain and reserve the right to remove from said lands the tobacco barns and grain bins now situate thereon at any time within twelve months from the date of this deed, and possession of the dwelling and mobile homes thereon until the termination of six months from the date of this deed or until the occupants thereof have been relocated, whichever shall first occur. The parties of the first part reserve and retain the crop allotments allotted to said lands under the United States Agriculture Stabilization and Conservation Program and the party of the second part by the acceptance of this deed covenants and agrees to execute any instruments of release or assignment necessary to enable the transfer of the same from said lands and to release any right of the party of the second part to said allotments.

And the said parties of the first part, their heirs, executors and assigns, covenant to and with the said party of the second part, its successors and assigns, that they are seized in fee of the lands hereinabove conveyed; that they have the right to convey the same in fee simple; that the same are free and clear of any and all encumbrances, except for the lien of an annual charge of $300.00 to be paid to Mrs. Daisy McLean Eagles Pope during her life pursuant to the provisions of Items Sixth and Twelfth of the Will of W. W. Eagles recorded in Will Book P, at page 439 in the office of the Clerk of Superior Court of Edgecombe County, as modified

by instrument executed by the said Daisy McLean Eagles (Pope) recorded in Book 571, at page 280 of the Edgecombe Public Registry, which annual charges parties of the first part shall pay as they become due, and all ad valorem taxes for the year 1979; and that they will forever warrant and defend the title thereto against the lawful claims of all persons whomsoever.

IN WITNESS WHEREOF, said parties of the first part have hereunto set their hands and adopted as their seals the typewritten word "(SEAL)" appearing beside their names, this the day and year first above written.

J. B. Webb (SEAL)
J. B. WEBB, JR.

Mary S. Webb (SEAL)
MARY S. WEBB

NORTH CAROLINA
~~EDGECOMBE~~ NASH COUNTY

I, Linda R. Wooten, a duly commissioned and qualified Notary Public in and for said County and State, do hereby certify that this day personally came before me J. B. WEBB, JR. and wife, MARY S. WEBB, who acknowledged the due execution by them of the foregoing instrument.

My commission expires 1-10-79.

Witness my hand and notarial seal, this the 5th day of January, 1979.

Linda R. Wooten
Notary Public

(Seal)

LINDA R. WOOTEN
Notary Public
NASH COUNTY, N.C.

NORTH CAROLINA, EDGECOMBE COUNTY

The foregoing certificate (s) of Linda R. Wooten a Notary Public, is (are) certified to be correct. This instrument was presented for registration and recorded in this office in Book ____ Page ____

This 5 day of January 19 79 at 4:50 o'clock P. M.

Mace Edmondson
Register of Deeds

BY Bettie L. Godfrey
Deputy

NORTH CAROLINA, EDGECOMBE COUNTY

The foregoing certificate(s) of J. Gordon Layton & Mary T. Braswell a Notary Public, is (are) certified to be correct. This instrument was presented for registration and recorded in this office in Book 1 Page 6. This 11 day of January 1979 at 11:00 o'clock A.M.

Register of Deeds

BY _____ Deputy

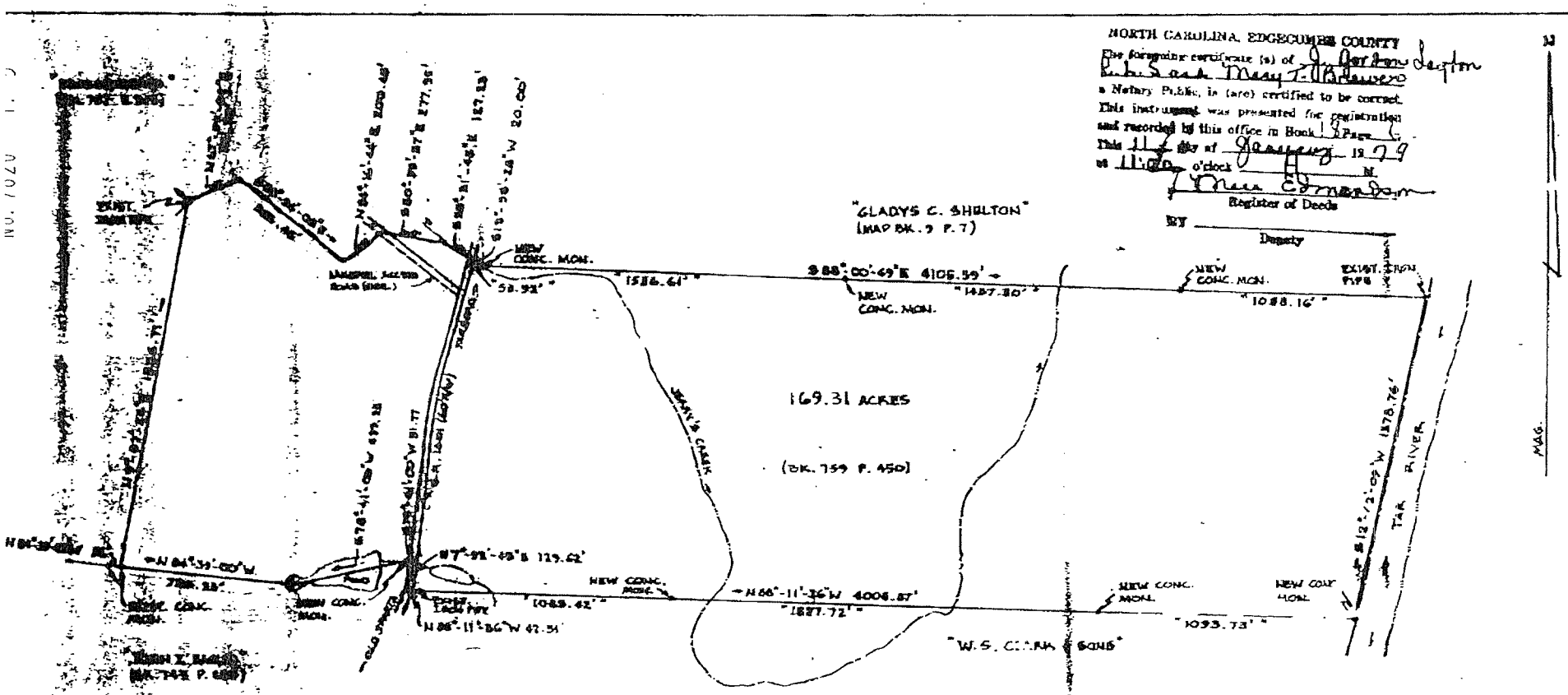

4725-77-9941-00

NOTE:

THIS PROPERTY CONSISTS OF TRACTS 3 & 4, OF 1910 MAP BY ATLANTIC COAST REALITY CO. (MAP BK. 1, P. 152); AND PART OF TRACTS 5 & 6, OF 1917 MAP BY ATLANTIC COAST REALITY CO. (MAP BK. 1, P. 66)

SCALE: 1" = 400'

400 200 100 0 400 1200

North Carolina
Edgecombe County

I, Mary T. Braswell, a Notary Public for said County and State, do hereby certify that J. Gordon Layton and _____ personally appeared before me this day and acknowledged the due execution of the foregoing instrument.

Witness my hand and official seal, this the 5th day of January, 1979.

(Official Seal)

Mary T. Braswell
Notary Public

My commission expires _____, 19____.

PROPERTY OF
J.B. WEBB JR. & MARY S. WEBB
NO. 8 TOWNSHIP, EDGECOMBE COUNTY
NEAR OLD SPRING, NORTH CAROLINA
BROWN, EDWARDS, & MILLER, INC.
SURVEYING — ENGINEERING
225 N. BENNETT ST. SOUTHERN PINES, N.C.
919-692-3544 28387
DEC. 15, 1978

STATE OF NORTH CAROLINA

Real Estate Excise Tax 37.00

4725-48-2383-00

NORTH CAROLINA

EDGECOMBE COUNTY

THIS DEED made and executed this the 30th day of November, 1971, by and between J. B. WEBB, JR. and wife, MARY S. WEBB, of Edgecombe County, North Carolina, parties of the first part, to EDGECOMBE COUNTY, a body politic and corporate of the State of North Carolina, party of the second part;

WITNESSETH:

That for and in consideration of the sum of Ten Dollars and other valuable considerations paid to the parties of the first part by the party of the second part, the receipt of which is hereby acknowledged, the said parties of the first part have given, granted, bargained and sold and do by these presents give, grant, bargain and sell, alien and convey unto the said party of the second part, its successors and assigns, all of that certain tract or parcel of land lying and being situated in Number Eight Township, Edgecombe County, North Carolina, and containing 105.0 acres, more or less, and being more particularly described as follows:

Beginning at a concrete monument and iron located in the southwest corner of Tract No. 5 as the same appears on a map recorded in Map Book 1, at page 66 of the Edgecombe County Public Registry, and also being the southwest corner of the Second Tract described in a deed from John I. Eagles, et ux, et al, to J. B. Webb, Jr. and William C. Webb recorded in Book 687, at page 273 of the Edgecombe County Public Registry, thence running along and with the western lines of Tract Nos. 5 and 6 as the same appear on said map recorded in Map Book 1, at page 66 of the Edgecombe Public Registry, North 32 degrees 18 minutes East 3,732.72 feet through five concrete monuments to an iron in the run of Wrights Creek, a corner with the property of Harvey and Porter McNair, cornering; thence running down and in the run of said Creek and with the line of Harvey and Porter McNair the following courses and distances: South 80 degrees 22 minutes East 92 feet, South 49 degrees 59 minutes East 169 feet, South 12 degrees 30 minutes West 84 feet, South 63 degrees 30 minutes East 93.92 feet, South 4 degrees 30 minutes West 122 feet, South 64 degrees 50 minutes West 63 feet, South 18 degrees 38 minutes East 226.6 feet, South 32 degrees 20 minutes East 54.05 feet, South 11 degrees 20 minutes East 130 feet, South 59 degrees 50 minutes East 219.92 feet, North 60 degrees 12 minutes East 96 feet, South 72 degrees 19 minutes East 99.9 feet, South 14 degrees 21 minutes East 39 feet, South 63 degrees 49 minutes East 54 feet, South 34 degrees 46 minutes East 118 feet, South 24 degrees 32 minutes West 70 feet, South 30 degrees 26 minutes East 79 feet, South 22 degrees 39 minutes West 116 feet, South 64 degrees 42 minutes East 175 feet, South 36 degrees 52 minutes East 126 feet, South 78 degrees 21 minutes East 101 feet, South 18 degrees 51 minutes East 122 feet, South 41 degrees 38 minutes West 128 feet, South 39 degrees 22 minutes East 122 feet, South 7 degrees 52 minutes East 121.95 feet, South 43 degrees 52 minutes East 96.95 feet, at the confluence of said Wrights Creek and Jerry's Creek, cornering; (being point A on the Staton Map hereinafter referred to), thence in a westerly and northwesterly direction up the run of said Jerry's Creek to a point in the said Creek (being point B on the Staton Map hereinafter referred to, the same being South 8 degrees 50 minutes West 300 feet, North 49 degrees 00 minutes West 577 feet from the center of the run of Wrights Creek at the western right of way line of State Road 1601); thence running up said run the following courses and distances: South 87 degrees 53 minutes West 99.78 feet, North 52 degrees 33 minutes West 207.8 feet, North 25 degrees 18 minutes West 91.85 feet, North 46 degrees 18 minutes West 246.55 feet, North 85 degrees 29 minutes West 118.25 feet, South 7 degrees 14 minutes West 117.58 feet, and South 80 degrees 45 minutes West 116.05 feet, cornering; thence running South 10 degrees 10 minutes West 1,570.46 feet to the southern line of said Tract 5 as the same appears on said map recorded in Map Book 1, at page 66 of the Edgecombe County Public

Registry, a corner with John I. Eagles, cornering; thence running along and with the southern line of said Tract 5 and the line of John I. Eagles, North 84 degrees 39 minutes West 1,878.45 feet across a stream and through two concrete monuments to the point of beginning, and the same being a portion of the property described as the Second Tract in a deed from John I. Eagles, et ux, et al, to J. B. Webb, Jr. and William C. Webb recorded in Book 687, at page 273, of the Edgecombe County Public Registry, the interest of the said W. C. Webb in said lands having been conveyed by W. C. Webb and wife to J. B. Webb, Jr. and wife, Mary S. Webb, by deed recorded in Book 759 at page 450, of said Registry, and reference is hereby made to said deeds and the map hereinbefore referred to for further and more particular description. Reference is also made to a map entitled "Property of J. B. Webb, No. 8 Township, Edgecombe County, N. C." by Staton and Associates, Tarboro, N. C., dated November 3, 1971, a copy of which is in possession of Edgecombe County.

TO HAVE AND TO HOLD the above described land together with all rights, privileges and appurtenances thereto belonging, or in anywise thereto appertaining, unto the said party of the second part, its successors and assigns, in fee simple.

And the said parties of the first part for and in consideration of the sum of One Dollar and other valuable considerations paid to them by the said party of the second part, the receipt of which is hereby acknowledged, give and grant unto the said party of the second

for original Map — See John Kory P.E. Surveyor 209 Peal St. Rocky Mt. 977-3124 they have Staton & Assoc. original Map

part, its successors and assigns, a right of way sixty feet in width extending from the western right of way line of State Road 1601 to the lands hereinabove conveyed for the purposes of the construction of a road and other utilities from said State Road 1601 to the lands hereinabove conveyed to the party of the second part; and the said parties of the first part, for themselves, their heirs, executors and administrators, covenant and agree to execute and deliver to the said party of the second part, or to the North Carolina State Highway Commission, if so directed by the party of the second part, a right of way agreement for the purposes hereinabove set forth, said right of way to be at such point selected by the said party of the second part within the area hereinafter described:

Beginning at the confluence of Wrights Creek and Jerry's Creek (being point A on the map entitled "Property of J. B. Webb, No. 8 Township, Edgecombe County, N. C.")made by Staton and Associates, and dated November 3, 1971, a copy of which is in the possession of Edgecombe County, thence down the run South 28 degrees 10 minutes East 140 feet to the western right of way line of State Road 1601, cornering; thence along and with the western right of way line South 8 degrees 50 minutes West 300 feet, cornering; thence North 49 degrees 00 minutes West 577 feet to the center of the run of Jerry's Creek, the same being point B as shown on said Map, thence down the center of the run of Jerry's Creek to the point of beginning.

And the said parties of the first part, their heirs, executors and assigns, covenant to and with the said party of the second part, its successors and assigns, that they are seized in fee of the lands hereinabove conveyed; that they have the right to convey the same in fee simple; that the same are free and clear of any and all encumbrances; and that they will forever warrant and defend the title thereto against the lawful claims of all persons whomsoever.

IN WITNESS WHEREOF, said parties of the first part have hereunto set their hands and affixed their seals, this the day and year first above written.

J. B. Webb, Jr. (SEAL)

Mary S. Webb (SEAL)

NORTH CAROLINA

EDGECOMBE COUNTY

I, Ramona M. Robinson, a duly commissioned and qualified Notary Public in and for said County and State, do hereby certify that this day personally came before me J. B. WEBB, JR. and wife, MARY S. WEBB, who acknowledged the due execution by them of the foregoing deed.

My commission expires September 1, 1974.

Witness my hand and notarial seal, this the 30 day of November, 1971.

Ramona M. Robinson
Notary Public

RAMONA M. ROBINSON NOTARY PUBLIC EDGECOMBE COUNTY, N. C.

NORTH CAROLINA, EDGECOMBE COUNTY

The foregoing certificate (s) of Ramona M. Robinson a Notary Public, is (are) certified to be correct. This instrument was presented for registration and recorded in this office in Book ___ Page ___ This 30 day of November 1971 at 5:30 o'clock ___ M.

Mae E. Dancy
Register of Deeds

BY _____
D. R.