Scanned By	Date	DOC ID	Permit
Backus	10/07/2014	21657	3212-TRANSFER-2014

CITY OF DURHAM TRANSFER STATION

2115 EAST CLUB BLVD
DURHAM, NC

Project Number: 2013-6

OWNER:
CITY OF DURHAM
SOLID WASTE MANAGEMENT
1833 CAMDEN AVE
DURHAM, NC, 27704
(919) 560-4186
CONTACT: MR. DONALD LONG, DIRECTOR

DEVELOPER:
WASTE INDUSTRIES
3301 BENSON DRIVE, SUITE 601
RALEIGH, NC, 27609
(919) 325-4000
CONTACT: MR. BRENT KIRCHOFF

ENGINEER:
BARNARD ENGINEERING, P.C.
1534 SARATOGA BLVD.
INDIAN TRAIL, NC 28079
(704) 421-3067
CONTACT: MR. JOHN BARNARD, P.E
jbarnard@barnardengineeringpc.com

NORTH CAROLINA PROFESSIONAL SEAL 19665 ENGINEER JOHN D. BARNARD

SITE

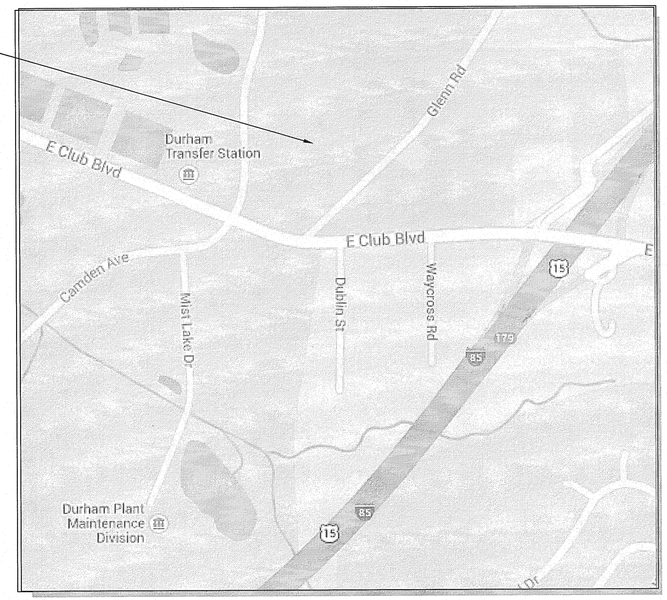

PROJECT LOCATION MAP
NOT TO SCALE

Sheet List Table	
Sheet Number	Sheet Title
C-0	COVER
C-1	EXISTING CONDITIONS PLAN
C-2	Site Plan
C-3	INITIAL GRADING AND PHASE 1 EROSION AND SEDIMENTATION CONTROL
C-4	INITIAL GRADING DETAIL
C-5	INTERIM GRADING AND PHASE 2 EROSION AND SEDIMENTATION CONTROL
C-5A	UTILITY INSTALLATION DURING INTERIM GRADING
C-6	FINAL GRADING
C-7	WET POND DETAIL GRADING
C-7A	WET POND OUTLETS
C-8	LANDSCAPING AND LIGHTING PLAN
C-9	LANDSCAPE DETAILS
C-10	WET POND PLANTNG SCHEDULE
C-11	REQUIRED SIDEWALK PLAN
C-12	EROSION CONTROL DETAILS SHEET 1 OF 3
C-13	EROSION CONTROL DETAILS SHEET 2 OF 3
C-14	EROSION CONTROL DETAILS SHEET3 OF 3
C-15	TEMPORARY SEEDING SPECIFICATIONS
C-16	PERMANENT SEEDING SPECIFICATIONS
C-17	STORM SYSTEM DETAILS
C-18	SITE DETAILS
C-19	SITE RETAINING WALL PLAN AND PROFILE
C-20	GENERAL CONSTRUCTION SPECIFICATIONS
U-1	OVERALL UTILITIES
U-2	WATER SYSTEM DETAIL
U-3	SEWER AND WATER DETAILS SHEET 1 OF 3
U-4	SEWER AND WATER DETAILS SHEET 2 OF 3
U-5	SEWER AND WATER DETAILS SHEET 3 OF 3
A-501	ARCHITECTURAL ELEVATIONS 1 OF 2
A-502	ARCHITECTURAL ELEVATIONS 2 OF 2

SITE AND DEVELOPMENT DATA		
JURISDICTION		City of Durham
TAX PARCEL(S):	(PID):	168556, 160447, 160449
	(PIN):	0842-01-29-9290, 0842-01-18-1935
	(PIN):	0843-01-10-5025
PARCEL AREA		168556-12.83 AC, 160447-68.91 AC, 160449-54.48 AC
ZONING		IL
WATERSHED		FALLS LAKE
OVERLAY DISTRICT		F/J-B
RIVER BASIN		NEUSE
CURRENT USE PROPOSED USE		SOLID WASTE TRANSFER STATION SOLID WASTE TRANSFER STATION
CURRENT IMPERVIOUS AREA (AFFECTED AREA)		1.25 AC
PROPOSED IMPERVIOUS AREA (AFFECTED AREA)		2.84 AC
EXISTING BUILDING AREA		10,100 SF
PROPOSED BUILDING AREA		15,650 SF NEW, 500 SF CONDITIONED
EXISTING PARKING		3 ON THIS PARCEL
PROPOSED PARKING		4 ADDITIONAL
PROPOSED TREE COVERAGE		0.68 AC.
ALLOWABLE BUILDING HEIGHT		50-FT
PROPOSED BUILDING HEIGHT		46' 2"

WASTE INDUSTRIES

BARNARD ENGINEERING, P.C.
1534 Saratoga Blvd., Indian Trail, NC 28079
(704) 421-3067
www.barnardengineeringpc.com
N.C. License No. C-3679

NO.	DATE	BY	REVISION
1	3-10-14	JDB	CITY OF DURHAM FIRST SITE PLAN REVIEW
2	4-24-14	JDB	CITY OF DURHAM SECOND SITE PLAN REVIEW

BEFORE YOU DIG!
CALL 1-800-632-4949
N.C. ONE-CALL CENTER
IT'S THE LAW!

PUBLIC WORKS CONDITIONS OF APPROVAL

1. The design professional (a NCPE, NCPLS, or NCRLA - as required) will submit 3 sets of construction drawings to the Public Works Department - Development Review for review and approval. Construction Drawing Approval is required prior to commencing construction (See Construction Plan Approval Process). The approval of construction drawings is separate from site plan approval. City Officials shall review all sizes, materials, slopes, locations, extensions and depths for all proposed utilities (waterlines, sanitary sewer lines and storm drainage conveyance systems) for compliance with applicable regulatory standards, specifications and best management practices.
2. The design professional (a NCPE, NCPLS, or NCRLA - as required) shall submit one (1) set of as-built drawings to the Public Works Department - Development Review for review and approval. As-built drawing approval is required prior to water meter installation and sanitary sewer service connection and prior to issuance of a certificate of occupancy.
3. Fire flow analysis is required for review and approval as part of the construction drawing approval process. To schedule flow test or obtain current system data, complete the online application (http://durhamnc.gov/ich/op/pwd/Pages/fire_flow.aspx.
4. If a meter 2" or larger is proposed, contact Water Management at 560-4381 prior to the construction of the meter vault to verify the type and dimensions of the meter.
5. Water permit required after construction drawing approval and prior to commencing water main installation.
6. Sewer permit required after construction drawing approval and prior to commencing sewer main installation.
7. At a minimum, the stormwater design details for this project shall be governed by the minimum standards of the most recent edition of the City of Durham (City) Reference Guide for Development (RGD) and any Letters to Industry (posted on the City's website) or supplemental notifications of RGD updates(also posted on the City's website) that are in effect the date the first submittal of construction drawings are received for review by the City.
8. Stormwater control measure(s) (SCMs) permit fee(s), the executed Stormwater Facility Agreement and Covenants (prepared by the City of Durham Stormwater Services) and either a payment into the Stormwater Replacement Fund or the provision of an Alternate Perpetual Maintenance Security are required for all SCMs associated with this development. Construction of the development is not allowed to commence until these items are provided in accordance with the terms and conditions outlined in the Stormwater Facility Agreement and Covenants. The designer shall submit a certified construction cost estimate for every stormwater SCM proposed in the development at the first submittal of construction drawings.
9. An as-built certification for the stormwater control measure(s) (SCMs), provided by the deisgn engineer, is required. The as-built shall be submitted in accordance with the City of Durham BMP Certifying Engineer (BCE) Program (refer to Section 8.6, BMP Certifying Engineer Program for Stormwater SCMs in the City of Durham, of the Reference Guide for Development) and approved by Stormwater Services prior to issuance of any certificates of occupancy or certificates of compliance for this project.
10. Stormwater control measure(s) (SCMs) design calculations will not be reviewed or approved with the Site Plan/Preliminary Plat submittal. All SCM Designs will be reviewed and approved during the construction drawing (CD) submittal process. If at the time of CD submittal, it is found the proposed SCM(s) is undersized or otherwise insufficient or unsuitable for the site, it is the responsibility of the applicant to insure that the applicable stormwater ordinance requirements are met. A revised site plan or preliminary plat may be required if the originally proposed SMCs are found insufficient or unsuitable, and alternative SCM(s) to meet the applicable stormwater ordinance are required.
11. For developments other than Single Family Detached Residential Developments making use of the Nutrient Offset Payment to the North Carolina Ecosystem Enhancement Program: A site plan / preliminary plat or subdivision plan cannot be approved until a receipt from the North Carolina Ecosystem Enhancement Program has been received by the City of Durl.am confirming the payment of offset fees.
12. For developments other than Single Family Detached Residential Developments making use of a nutrient bank: To receive site plan / preliminary plat approval for developments other than Single Family Detached Residential Developments that are making use of nutrient banks, the approval of the site plan / preliminary plat is contingent upon the purchase of nutrient credits from an approved nutrient bank. If a revised site plan / preliminary plat is submitted for this development, the revised site plan /preliminary plat will be subject to any ordinances in effect at the time of the revised site plan / preliminary plat submission. Prior to the approval of the site plan / preliminary plat, a letter showing the purchase of nutrient credits for this development and a copy of the nutrient bank ledger, showing the total nutrient credits available minus any and all deductions, is to be provided to the City of Durham Stormwater Services Section.
13. Final Design Calculations for the stormwater BMP facility will require the use of storage indication routing methodology such as TR-20 or HEC-1 models. For the BMP facility, provide stage-storage relationship and inflow and outflow hydrographs. Provide all tabulated data including calculations showing the outlet under orifice control, barrel control and weir control as appropriate to show how the routing was developed.
14. A completed City of Durham Design Summary is required for each stormwater BMP facility no later than at the first construction drawing submittal.

CITY OF DURHAM CASE NUMBER D1300349
GENERAL CONDITIONS OF APPROVAL

1. This site is not in any Special Flood Hazard Areas or Future Conditions Flood Hazard Areas as shown on FIRM Panel 37200842000J dated May 2, 2006.
2. Buffer authorization by the North Carolina Division of Water Quality (NCDWQ) is required prior to Construction Drawing Approval. Site Plan changes occurring as a result of alterations needed to receive buffer authorization may result in the need for a site plan amendment or a new site plan based on the scope of the required changes. If a site plan amendment or new site plan is required, it must be approved prior to Construction Drawing approval. Contact the Durham City-County Planning Department at (919) 560-4137 to determine if a site plan amendment or a new site plan will be required.
3. 100-foot wide undisturbed stream buffer, measured from top of bank, each side of stream. No clearing or grading other than selective thinning and ordinary maintenance of existing vegetation permitted, except in accordance with 15A NCAC 02B.233(6) Vegetation Management. No structures or features requiring grading or construction may be built within the 10-foot stream buffer setback. Any use allowed by Section 8.5.5 of the UDO shall be designed and constructed to minimize the amount of intrusion into the stream buffer and to minimize clearing, grading, erosion and water quality degradation.
4. State and Federal permit authorization may be required from the NCDENR, NCDWQ, and the US Army Corps of Engineers prior to the commencement of any land disturbing activities in or near a lake, stream, creek, tributary, or any unnamed body of water and its adjacent wetlands.
5. Pine straw shall not be used as mulch or groundcover within ten feet of any structures consisting of exterior combustible construction as specified by Durham City Code Section 46-87.
6. All landscaping must be in place prior to request for Certificate of Compliance. Contact Durham City/County Planning Department Site Compliance staff for inspection.
7. Each Landscaping compliance inspection after the initial inspection will incur a reinspection fee. Payment must be received by the Durham City/County Planning Department prior to reinspection.
8. 20-foot wide undisturbed landscape buffer. No clearing or grading other than selective thinning and ordinary maintenance of existing vegetation permitted.
9. Construction in Preserved Tree Coverage Areas:
   - 9.1. Preserved tree coverage areas shall not be used for active recreational purposes, except walking paths and foot trails constructed with minimal disturbance of tree roots and existing vegetation provided a registered arborist has certified that the construction of the trail has been designed to minimize impact the existing trees. No tree over 10-inches shall be removed for the construction of trails. Site Plan approval is required for construction of trails in preserved tree coverage areas.
   - 9.2. All buildings shall be set back at least 10 feet from the edge of any preserved tree coverage area.
   - 9.3. Utility lines and drainage channels shall be minimized within the root protection zones of the tree to be saved. Preferably, such facilities should be located adjacent to driveways and in groupings allowed by sound engineering practices.
10. Tree protection fencing must be in place prior to any demolition, land disturbance, or issuance of a grading permit and shall include warning signs posted in both English and Spanish, as follows: "No Trespassing/Tree Protection Area/Prohibido Entrar/Zona Protectora Para los Arboles."
11. Root Protection Zone: Equals one foot of radius for every inch of diameter of existing trees, or six foot radius, whichever is greater. No disturbance allowed within this area. Area must be protected with both tree protection fencing and warning signs.
12. Protection of Existing Vegetation: At the start of grading involving lowering of existing grade around a tree or stripping of topsoil, a clean, sharp, vertical cut shall be made at the edge of the tree save area prior to or at the same time as silt fence and other erosion control measures are installed. The tree protection fencing shall be installed on teh side of teh cut farthest away from the tree trunk and shall remain in place until all construction in the vicini of the trees is complete. No storage of materials, fill, or equipment and no trespassing shall allowed within the boundary of the protected area.
13. Measures shall be provided to prevent light spillover onto adjacent properties and glar toward motor vehicle operators and shall be indicated on the site plan. Exterior lights shall b shielded so that they do not cast direct light beyond the property line. In accordance with the standards:
   - 13.1. The maximum illumination at the edge of the property line adjacent to residential zonin is 0.5 foot candles.
   - 13.2. The maximum illumination at the edge of the property line adjacent to non-residenti zoning is 5.0 foot candles.
   - 13.3. The maximum illumination at the edge of the property line adjacent to a street is 5.0 foo candles.
   - 13.4. The level of illumination as measured in foot candles at any one point shall meet th standards in the table in UDO Section 7.4 with minimum and maximum levels measure on the pavement within the lighted area.
   - 13.5. The maximum height for directional and full cut-off lighting fixtures (fixtures designed t insure that no light is emitted above a horizontal line parallel to the ground) shall be 3 feet above grade, measured to the top of the fixture.
   - 13.6. The maximum height for non directional lighting fixtures, which are defined as fixtures designed to allow light to be emitted above a horizontal light parallel to the ground, sha be 15-feet above grade, measured to the top of the fixture.
   - 13.7. These standards must be verified by field survey (by use of photometric survey) prior t the Certificate of Compliance being issued. All of this information, including details wi be required on building plans prior to issuance of building permit.
14. Provide Fire Plans Examiner one copy of utility construction drawings, showing underground piping layout and all fire appurtenances. Permit for installation of private fire hydrant(s) mus be issued by Fire Plans Examiner prior to installation of said hydrants.
15. Temporary or permanent roadways of all-weather driving surface, capable of supporting a 75,000 pound vehicle weight, shall be established prior to the commencement of building construction activities. These roadways shall be extended with the progress of construction so that:
   - 15.1. All points around the perimeter of a building under construction is no greater than 15 feet travel distance from a roadway.
   - 15.2. Fire Department connections (FDC), either temporary or permanent, are no greater than 100 feet travel distance from a roadway.
16. Temporary weather resistant street signs of standard size and lettering shall be provided a the intersections of temporary or permanent roadways and shall remain in place until replace by permanent signs.
17. Fire hydrants, as shown on the approved site plan, shall be placed in service and mad available to the fire department as as combustible material arrives on site. No construction fencing or other barriers are to be placed between the roadway and the hydrants with minimum 3 feet working clearance around hydrants. Hydrant service shall be extended wit the progress of construction so that:
   - 17.1. All points around the perimeter of a building under construction is no greater than 50 feet travel distance from a hydrant.
   - 17.2. Fire department connections (FDC), either temporary or permanent, are no greater than 50 feet travel distance from a hydrant.
18. A sedimentation and erosion control plan must be submitted and approved prior to th issuance of a land-disturbance permit.
19. If offsite soil spoil or borrow site is utilized, then the disturbed area for the spoil/borrows must be included in the land disturbance plan and permit unless the spoil/borrow site alread has a land disturbance permit.

APPROVED
DIVISION OF WASTE MANAGEMENT
SOLID WASTE SECTION
Date 10/07/2014 **By** Patricia M. Beckner
DIN 21657
Attachment 1 **Part** VI **Document** 3
Permit 3212-TRANSFER-2014 **Permit DIN** 21770

SPECIAL CONDITIONS OF APPROVAL

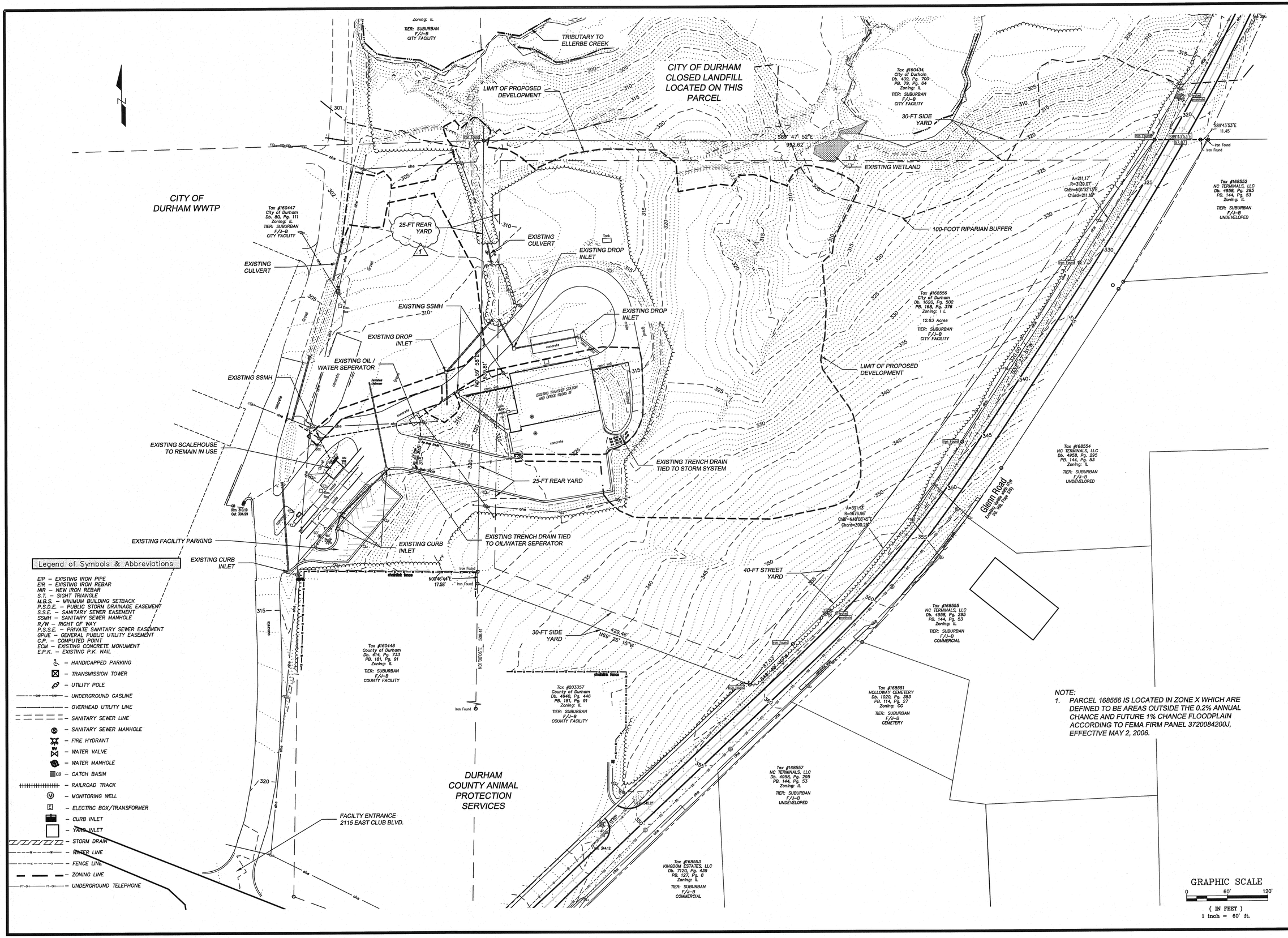

NOTE:
1. PARCEL 168556 IS LOCATED IN ZONE X WHICH ARE DEFINED TO BE AREAS OUTSIDE THE 0.2% ANNUAL CHANCE AND FUTURE 1% CHANCE FLOODPLAIN ACCORDING TO FEMA FIRM PANEL 3720084200J, EFFECTIVE MAY 2, 2006.

BARNARD ENGINEERING, P.C.
5534 Saratoga Blvd., Indian Trail, NC 28079
(704) 421-3067
www.barnardengineeringpc.com
N.C. License No. C-3679

NO.	DATE	BY	REVISION
1	3-10-14	JDB	CITY OF DURHAM FIRST SITE PLAN REVIEW

CITY OF DURHAM TRANSFER STATION SITE PLAN SUBMITTAL
DURHAM, NC
WASTE INDUSTRIES
3301 BENSON DRIVE, SUITE 600
RALEIGH NC

EXISTING CONDITIONS PLAN

DESIGNED	DRAWN	DATE	SCALE	CHECKED	PROJECT NO.
JDB	JDB	10/31/13	AS SHOWN	JDB	2013-6

NORTH CAROLINA PROFESSIONAL SEAL 19665 ENGINEER JOHN D. BARNARD

SHEET:
C-1

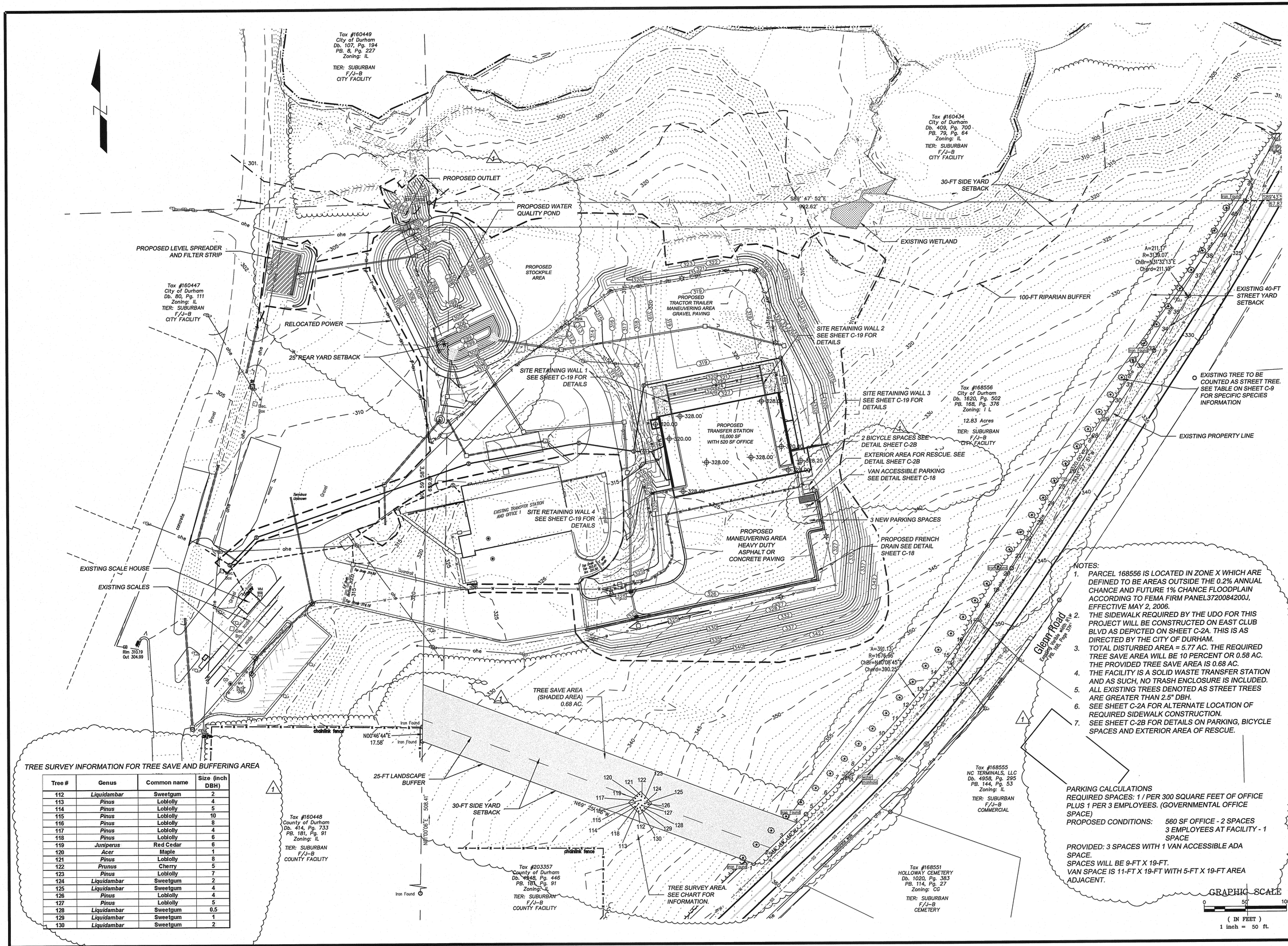

NOTES:

1. PARCEL 168556 IS LOCATED IN ZONE X WHICH ARE DEFINED TO BE AREAS OUTSIDE THE 0.2% ANNUAL CHANCE AND FUTURE 1% CHANCE FLOODPLAIN ACCORDING TO FEMA FIRM PANEL37200842OOJ, EFFECTIVE MAY 2, 2006.
2. THE SIDEWALK REQUIRED BY THE UDO FOR THIS PROJECT WILL BE CONSTRUCTED ON EAST CLUB BLVD AS DEPICTED ON SHEET C-2A. THIS IS AS DIRECTED BY THE CITY OF DURHAM.
3. TOTAL DISTURBED AREA = 5.77 AC. THE REQUIRED TREE SAVE AREA WILL BE 10 PERCENT OR 0.58 AC. THE PROVIDED TREE SAVE AREA IS 0.68 AC.
4. THE FACILITY IS A SOLID WASTE TRANSFER STATION AND AS SUCH, NO TRASH ENCLOSURE IS INCLUDED.
5. ALL EXISTING TREES DENOTED AS STREET TREES ARE GREATER THAN 2.5" DBH.
6. SEE SHEET C-2A FOR ALTERNATE LOCATION OF REQUIRED SIDEWALK CONSTRUCTION.
7. SEE SHEET C-2B FOR DETAILS ON PARKING, BICYCLE SPACES AND EXTERIOR AREA OF RESCUE.

PARKING CALCULATIONS
REQUIRED SPACES: 1 / PER 300 SQUARE FEET OF OFFICE PLUS 1 PER 3 EMPLOYEES. (GOVERNMENTAL OFFICE SPACE)
PROPOSED CONDITIONS: 560 SF OFFICE - 2 SPACES
3 EMPLOYEES AT FACILITY - 1 SPACE
PROVIDED: 3 SPACES WITH 1 VAN ACCESSIBLE ADA SPACE.
SPACES WILL BE 9-FT X 19-FT.
VAN SPACE IS 11-FT X 19-FT WITH 5-FT X 19-FT AREA ADJACENT.

TREE SURVEY INFORMATION FOR TREE SAVE AND BUFFERING AREA

Tree #	Genus	Common name	Size (inch DBH)
112	Liquidambar	Sweetgum	2
113	Pinus	Loblolly	4
114	Pinus	Loblolly	5
115	Pinus	Loblolly	10
116	Pinus	Loblolly	8
117	Pinus	Loblolly	4
118	Pinus	Loblolly	6
119	Juniperus	Red Cedar	6
120	Acer	Maple	1
121	Pinus	Loblolly	8
122	Prunus	Cherry	5
123	Pinus	Loblolly	7
124	Liquidambar	Sweetgum	2
125	Liquidambar	Sweetgum	4
126	Pinus	Loblolly	4
127	Pinus	Loblolly	5
128	Liquidambar	Sweetgum	0.5
129	Liquidambar	Sweetgum	1
130	Liquidambar	Sweetgum	2

BARNARD ENGINEERING, P.C.
1534 Saratoga Blvd., Indian Trail, NC 28079
(704) 421-3067
www.barnardengineeringpc.com
N.C. License No. C-3679
S.C. COA: 4599
GA. License No. PEFco6337

NO.	DATE	BY	REVISION
1	3-10-14	JDB	CITY OF DURHAM FIRST SITE PLAN REVIEW & INTERNAL REVISIONS

CITY OF DURHAM TRANSFER STATION SITE PLAN SUBMITTAL
DURHAM, NC
WASTE INDUSTRIES
3301 BENSON DRIVE, SUITE 600
RALEIGH NC

SITE PLAN

DESIGNED	DRAWN	CHECKED
JDB	JDB	JDB
SCALE	DATE	PROJECT NO.
AS SHOWN	10/31/13	2013-6

NORTH CAROLINA PROFESSIONAL SEAL 19665 ENGINEER JOHN D. BARNARD

SHEET:
C-2

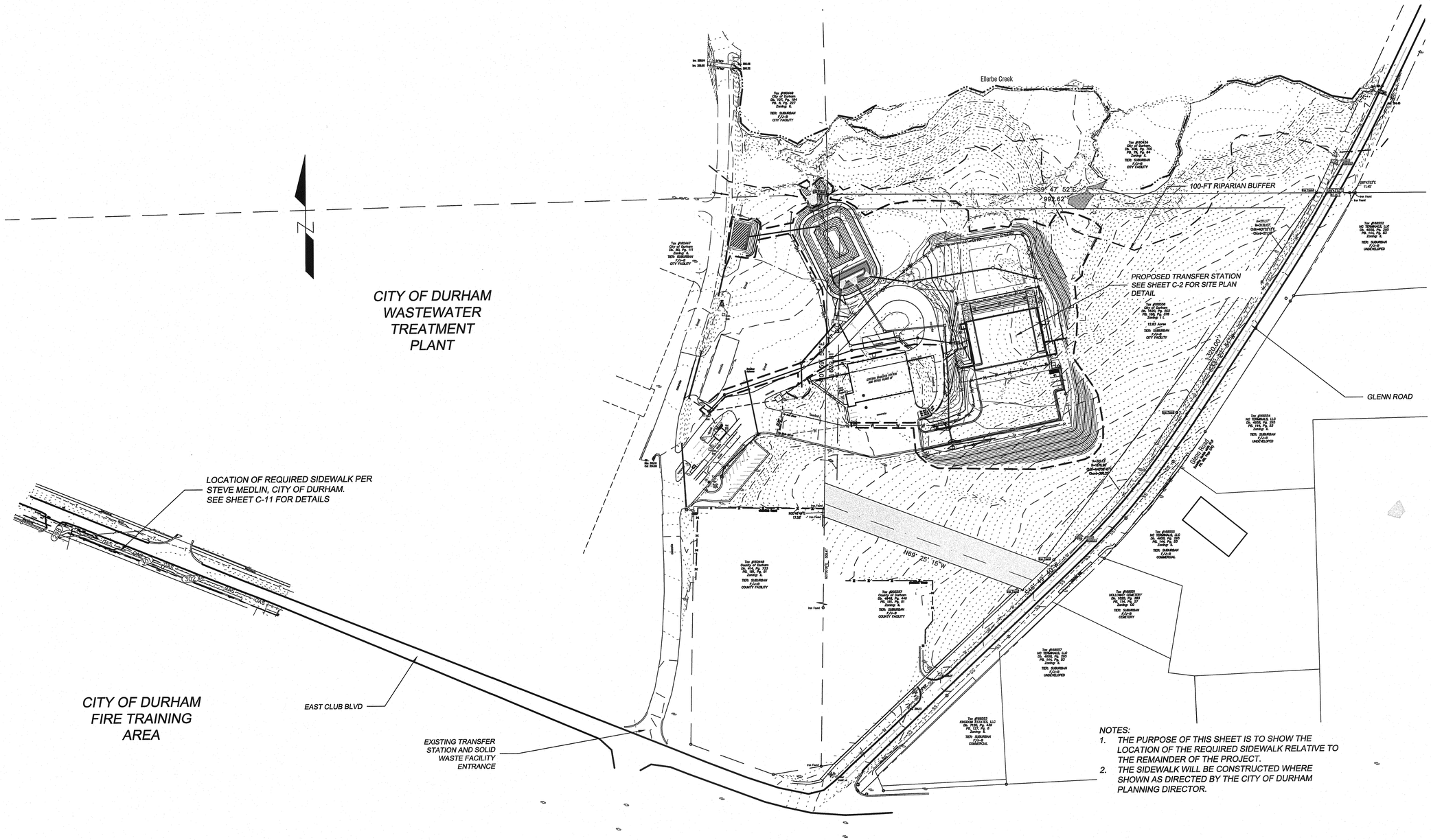

NOTES:

1. THE PURPOSE OF THIS SHEET IS TO SHOW THE LOCATION OF THE REQUIRED SIDEWALK RELATIVE TO THE REMAINDER OF THE PROJECT.
2. THE SIDEWALK WILL BE CONSTRUCTED WHERE SHOWN AS DIRECTED BY THE CITY OF DURHAM PLANNING DIRECTOR.

GRAPHIC SCALE

0 100' 200'

(IN FEET)
1 inch = 100 ft.

BARNARD ENGINEERING, P.C.
1534 Saratoga Blvd., Indian Trail, NC 28079
(704) 421-3067
www.barnardengineeringpc.com
N.C. License No. C-3679
S.C. COA: 4599
GA. License No. PEF006337

NO.	DATE	BY	REVISION
1	3-10-14	JDB	CITY OF DURHAM FIRST SITE PLAN REVIEW & INTERNAL REVISIONS

CITY OF DURHAM TRANSFER STATION SITE PLAN SUBMITTAL
DURHAM, NC
WASTE INDUSTRIES
3301 BENSON DRIVE, SUITE 600
RALEIGH NC

OVERALL PROJECT PLAN

DESIGNED	JDB	DRAWN	JDB	CHECKED	JDB
SCALE	AS SHOWN	DATE	10/31/13	PROJECT NO.	2013-6

NORTH CAROLINA PROFESSIONAL SEAL 19665 ENGINEER JOHN D. BARNARD

SHEET: 1
C-2A

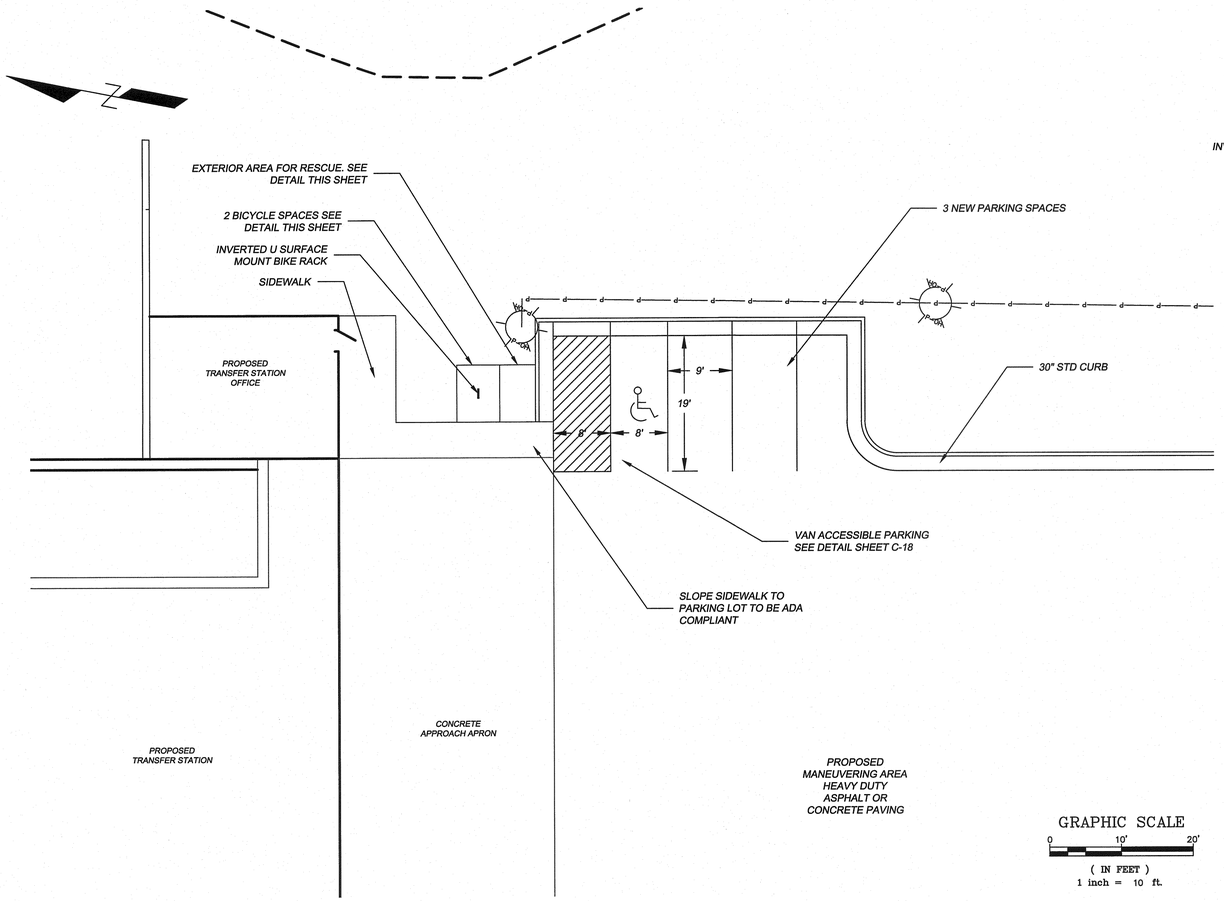

SITE PLAN DETAIL AREA

GRAPHIC SCALE

0 10' 20'

(IN FEET)
1 inch = 10 ft.

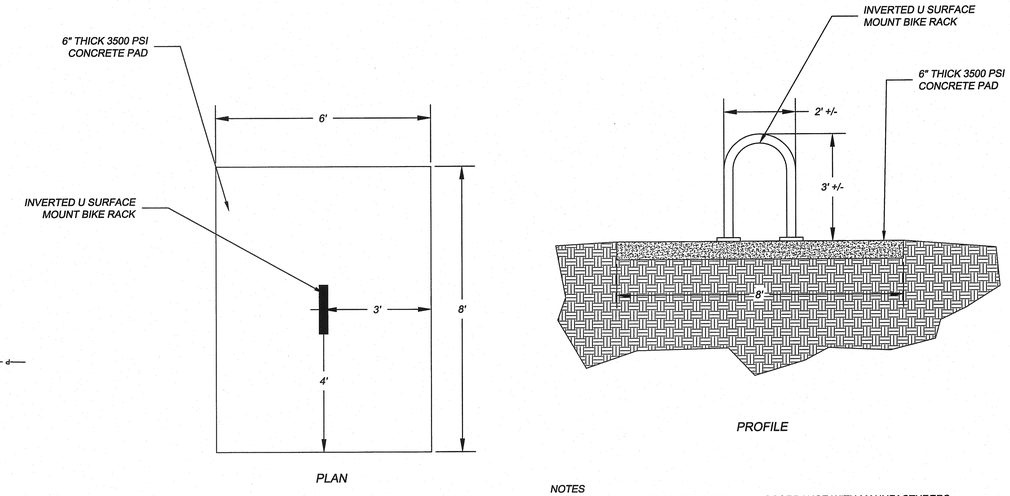

NOTES
1. INSTALLATION TO BE COMPLETED IN ACCORDANCE WITH MANUFACTURERS RECOMMENDATIONS.
2. CONTRACTOR TO SUBMIT SELECTED BIKE RACK TO ENGINEER FOR APPROVAL.

BICYCLE PARKING SPACE DETAIL

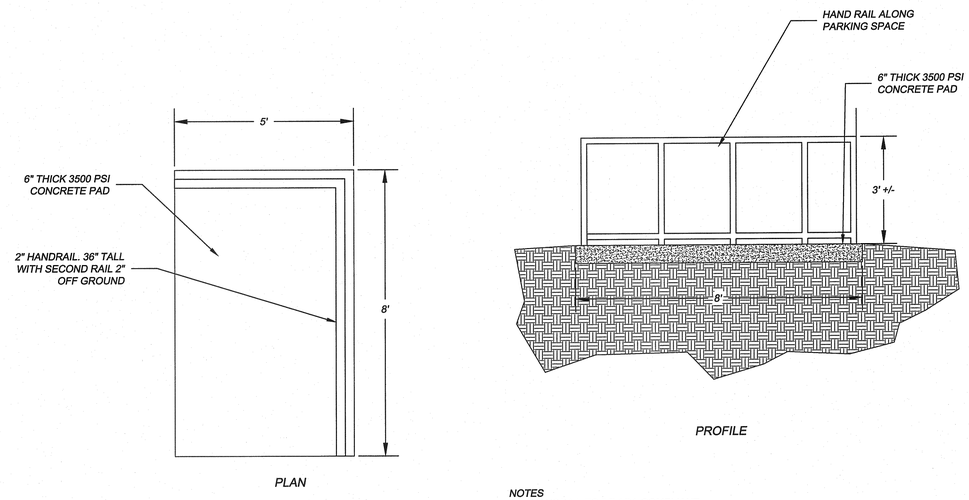

NOTES
1. HANDRAIL TO BE ADA COMPLIANT.
2. PROVIDE ADA COMPLIANT SIGN "EXTERIOR AREA OF ASSISTED RESCUE"

EXTERIOR AREA OF RESCUE DETAIL

BARNARD ENGINEERING, P.C.
1534 Saratoga Blvd., Indian Trail, NC 28079
(704) 421-3067
www.barnardengineeringpc.com
N.C. License No. C-3679
S.C. COA: 4509
GA. License No. PEF006337

NO.	DATE	BY	REVISION
1	3-10-14	JDB	CITY OF DURHAM FIRST SITE PLAN REVIEW & INTERNAL REVISIONS

CITY OF DURHAM TRANSFER STATION SITE PLAN SUBMITTAL
DURHAM, NC

WASTE INDUSTRIES
3301 BENSON DRIVE, SUITE 600
RALEIGH NC

SITE PLAN DETAIL

DESIGNED	DRAWN	CHECKED
JDB	JDB	JDB
SCALE	DATE	PROJECT NO.
AS SHOWN	10/31/13	2013-6

NORTH CAROLINA PROFESSIONAL SEAL 19665 ENGINEER JOHN D. BARNARD

SHEET:

C-2B

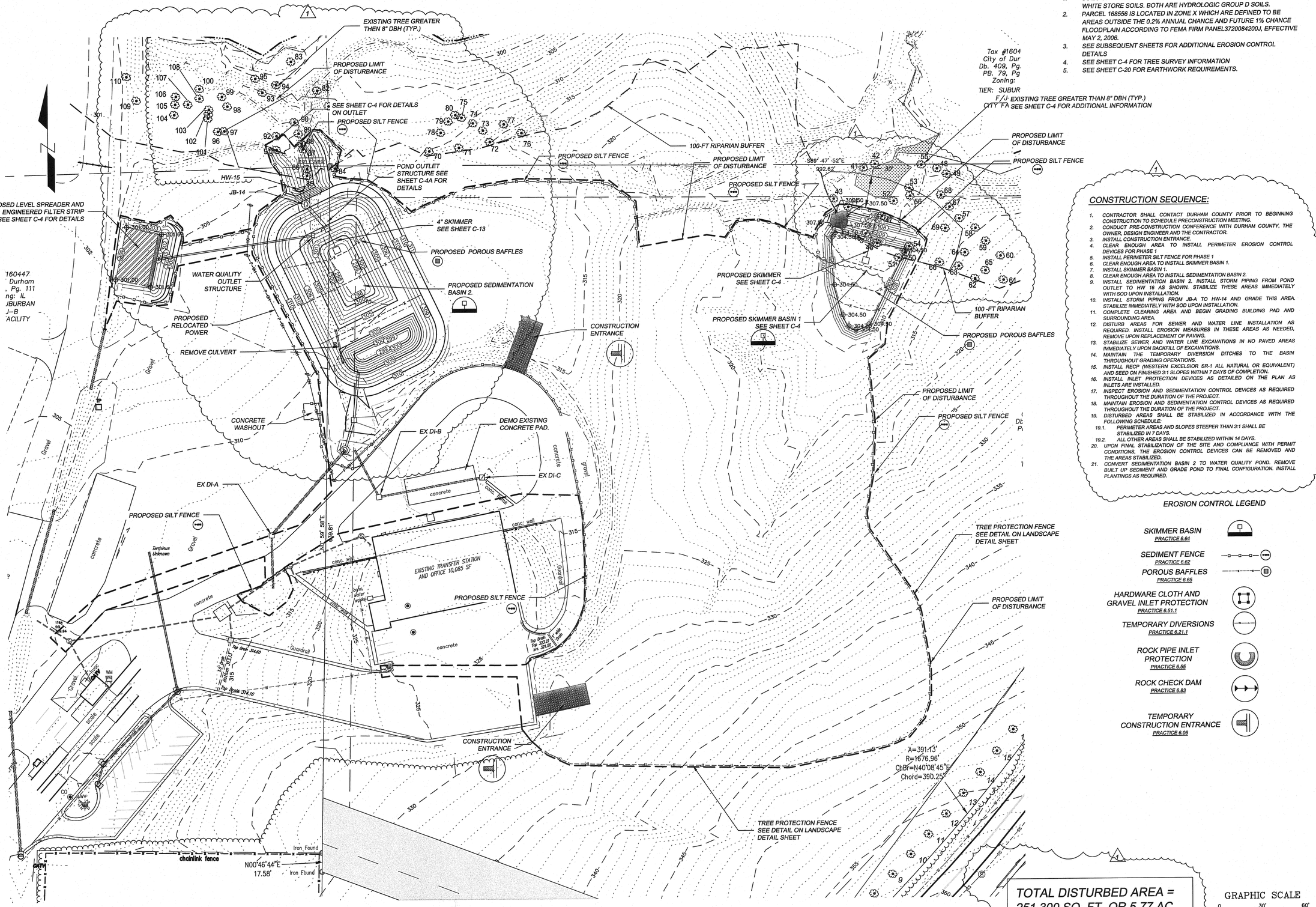

NOTES:

1. SOILS ON THIS SITE ARE COMPRISED PRIMARILY OF IREDELL AND WHITE STORE SOILS. BOTH ARE HYDROLOGIC GROUP D SOILS.
2. PARCEL 168556 IS LOCATED IN ZONE X WHICH ARE DEFINED TO BE AREAS OUTSIDE THE 0.2% ANNUAL CHANCE AND FUTURE 1% CHANCE FLOODPLAIN ACCORDING TO FEMA FIRM PANEL3720084200J, EFFECTIVE MAY 2, 2006.
3. SEE SUBSEQUENT SHEETS FOR ADDITIONAL EROSION CONTROL DETAILS
4. SEE SHEET C-4 FOR TREE SURVEY INFORMATION
5. SEE SHEET C-20 FOR EARTHWORK REQUIREMENTS.

CONSTRUCTION SEQUENCE:

1. CONTRACTOR SHALL CONTACT DURHAM COUNTY PRIOR TO BEGINNING CONSTRUCTION TO SCHEDULE PRECONSTRUCTION MEETING.
2. CONDUCT PRE-CONSTRUCTION CONFERENCE WITH DURHAM COUNTY, THE OWNER, DESIGN ENGINEER AND THE CONTRACTOR.
3. INSTALL CONSTRUCTION ENTRANCE.
4. CLEAR ENOUGH AREA TO INSTALL PERIMETER EROSION CONTROL DEVICES FOR PHASE 1
5. INSTALL PERIMETER SILT FENCE FOR PHASE 1
6. CLEAR ENOUGH AREA TO INSTALL SKIMMER BASIN 1.
7. INSTALL SKIMMER BASIN 1.
8. CLEAR ENOUGH AREA TO INSTALL SEDIMENTATION BASIN 2.
9. INSTALL SEDIMENTATION BASIN 2. INSTALL STORM PIPING FROM POND OUTLET TO HW 16 AS SHOWN. STABILIZE THESE AREAS IMMEDIATELY WITH SOD UPON INSTALLATION.
10. INSTALL STORM PIPING FROM JB-A TO HW-14 AND GRADE THIS AREA. STABILIZE IMMEDIATELY WITH SOD UPON INSTALLATION.
11. COMPLETE CLEARING AREA AND BEGIN GRADING BUILDING PAD AND SURROUNDING AREA.
12. DISTURB AREAS FOR SEWER AND WATER LINE INSTALLATION AS REQUIRED. INSTALL EROSION MEASURES IN THESE AREAS AS NEEDED, REMOVE UPON REPLACEMENT OF PAVING.
13. STABILIZE SEWER AND WATER LINE EXCAVATIONS IN NO PAVED AREAS IMMEDIATELY UPON BACKFILL OF EXCAVATIONS.
14. MAINTAIN THE TEMPORARY DIVERSION DITCHES TO THE BASIN THROUGHOUT GRADING OPERATIONS.
15. INSTALL RECP (WESTERN EXCELSIOR SR-1 ALL NATURAL OR EQUIVALENT) AND SEED ON FINISHED 3:1 SLOPES WITHIN 7 DAYS OF COMPLETION.
16. INSTALL INLET PROTECTION DEVICES AS DETAILED ON THE PLAN AS INLETS ARE INSTALLED.
17. INSPECT EROSION AND SEDIMENTATION CONTROL DEVICES AS REQUIRED THROUGHOUT THE DURATION OF THE PROJECT.
18. MAINTAIN EROSION AND SEDIMENTATION CONTROL DEVICES AS REQUIRED THROUGHOUT THE DURATION OF THE PROJECT.
19. DISTURBED AREAS SHALL BE STABILIZED IN ACCORDANCE WITH THE FOLLOWING SCHEDULE:
    - 19.1. PERIMETER AREAS AND SLOPES STEEPER THAN 3:1 SHALL BE STABILIZED IN 7 DAYS.
    - 19.2. ALL OTHER AREAS SHALL BE STABILIZED WITHIN 14 DAYS.
20. UPON FINAL STABILIZATION OF THE SITE AND COMPLIANCE WITH PERMIT CONDITIONS, THE EROSION CONTROL DEVICES CAN BE REMOVED AND THE AREAS STABILIZED.
21. CONVERT SEDIMENTATION BASIN 2 TO WATER QUALITY POND. REMOVE BUILT UP SEDIMENT AND GRADE POND TO FINAL CONFIGURATION. INSTALL PLANTINGS AS REQUIRED.

EROSION CONTROL LEGEND

- SKIMMER BASIN — PRACTICE 6.64
- SEDIMENT FENCE — PRACTICE 6.62
- POROUS BAFFLES — PRACTICE 6.65
- HARDWARE CLOTH AND GRAVEL INLET PROTECTION — PRACTICE 6.51.1
- TEMPORARY DIVERSIONS — PRACTICE 6.21.1
- ROCK PIPE INLET PROTECTION — PRACTICE 6.55
- ROCK CHECK DAM — PRACTICE 6.63
- TEMPORARY CONSTRUCTION ENTRANCE — PRACTICE 6.06

TOTAL DISTURBED AREA = 251,300 SQ. FT. OR 5.77 AC.

GRAPHIC SCALE
0 30' 60'
(IN FEET)
1 inch = 30 ft.

BARNARD ENGINEERING, P.C.
1534 Saratoga Blvd., Indian Trail, NC 28079
(704) 421-3067
www.barnardengineeringpc.com
N.C. License No. C-3679
S.C. COA: 4509
GA. License No. PEF006337

NO.	DATE	BY	REVISION
1	3-10-14	JDB	CITY OF DURHAM FIRST SITE PLAN REVIEW & INTERNAL REVISIONS

CITY OF DURHAM TRANSFER STATION SITE PLAN SUBMITTAL
DURHAM, NC

WASTE INDUSTRIES
3301 BENSON DRIVE, SUITE 600
RALEIGH NC

INITIAL GRADING AND PHASE 1 EROSION AND SEDIMENTATION CONTROL

DESIGNED	JDB	CHECKED	JDB
DRAWN	JDB	PROJECT NO.	2013-6
DATE	10/31/13		
SCALE	AS SHOWN		

NORTH CAROLINA PROFESSIONAL SEAL 19665 ENGINEER JOHN D. BARNARD

SHEET:
C-3

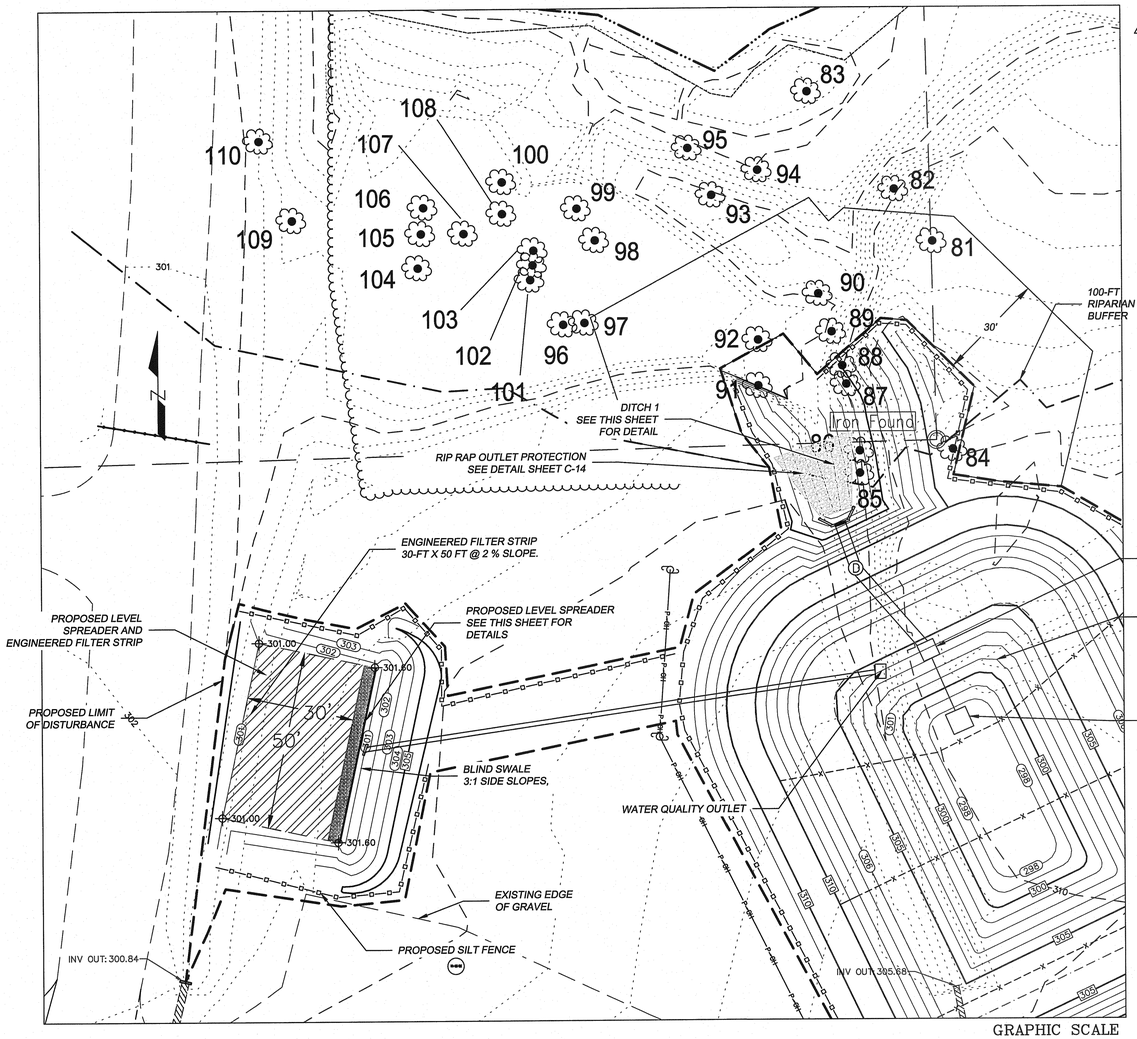

LEVEL SPREADER / FILTER STRIP / OUTLET DITCH DETAIL PLAN

Tree #	Genus	Common name	Size (inch DBH)
81	*Platanus*	Sycamore	6
82	*Platanus*	Sycamore	6
83	*Acer*	Maple	6
84	*Acer*	Maple	12 (twin)
85	*Liriodendron*	Poplar	4
86	*Liriodendron*	Poplar	5
87	*Fraxinus*	Ash	5
88	*Fraxinus*	Ash	6
89	*Ulmus*	Elm	10
90	*Liriodendron*	Poplar	7
91	*Fraxinus*	Ash	5
92	*Fraxinus*	Ash	5
93	*Platanus*	Sycamore	5
94	*Betula*	Birch	6
95	*Liriodendron*	Poplar	6
96	*Salix*	Willow	12
97	*Salix*	Willow	8
98	*Salix*	Willow	6 (twin)
99	*Salix*	Willow	10
100	*Acer*	Maple	6
101	*Salix*	Willow	6
102	*Salix*	Willow	6
103	*Salix*	Willow	6
104	*Salix*	Willow	10
105	*Salix*	Willow	10
106	*Salix*	Willow	10
107	*Salix*	Willow	6
108	*Salix*	Willow	12
109	*Liquidambar*	Sweetgum	10
110	*Juniperus*	Red Cedar	6

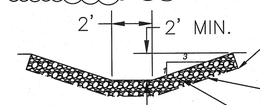

DITCH 1 SECTION

EROSION CONTROL LEGEND

- SKIMMER BASIN — PRACTICE 6.64
- SEDIMENT FENCE — PRACTICE 6.62
- POROUS BAFFLES — PRACTICE 6.65
- HARDWARE CLOTH AND GRAVEL INLET PROTECTION — PRACTICE 6.51.1
- TEMPORARY DIVERSIONS — PRACTICE 6.21.1
- ROCK PIPE INLET PROTECTION — PRACTICE 6.55
- ROCK CHECK DAM — PRACTICE 6.83
- TEMPORARY CONSTRUCTION ENTRANCE — PRACTICE 6.06

NOTES:

1. SOILS ON THIS SITE ARE COMPRISED PRIMARILY OF IREDELL AND WHITE STORE SOILS. BOTH ARE HYDROLOGIC GROUP D SOILS.
2. PARCEL 168556 IS LOCATED IN ZONE X WHICH ARE DEFINED TO BE AREAS OUTSIDE THE 0.2% ANNUAL CHANCE AND FUTURE 1% CHANCE FLOODPLAIN ACCORDING TO FEMA FIRM PANEL3720084200J, EFFECTIVE MAY 2, 2006.
3. SEE SUBSEQUENT SHEETS FOR ADDITIONAL EROSION CONTROL DETAILS
4. SEE SHEET C-20 FOR EARTHWORK REQUIREMENTS

CONSTRUCTION SEQUENCE:

1. CONTRACTOR SHALL CONTACT DURHAM COUNTY PRIOR TO BEGINNING CONSTRUCTION TO SCHEDULE PRECONSTRUCTION MEETING.
2. CONDUCT PRE-CONSTRUCTION CONFERENCE WITH DURHAM COUNTY, THE OWNER, DESIGN ENGINEER AND THE CONTRACTOR.
3. INSTALL CONSTRUCTION ENTRANCE.
4. CLEAR ENOUGH AREA TO INSTALL PERIMETER EROSION CONTROL DEVICES FOR PHASE 1
5. INSTALL PERIMETER SILT FENCE FOR PHASE 1
6. CLEAR ENOUGH AREA TO INSTALL SKIMMER BASIN 1.
7. INSTALL SKIMMER BASIN 1.
8. CLEAR ENOUGH AREA TO INSTALL SEDIMENTATION BASIN 2.
9. INSTALL SEDIMENTATION BASIN 2. INSTALL STORM PIPING FROM POND OUTLET TO HW 16 AS SHOWN. STABILIZE THESE AREAS IMMEDIATELY WITH SOD UPON INSTALLATION.
10. INSTALL STORM PIPING FROM JB-A TO HW-14 AND GRADE THIS AREA. STABILIZE IMMEDIATELY WITH SOD UPON INSTALLATION.
11. COMPLETE CLEARING AREA AND BEGIN GRADING BUILDING PAD AND SURROUNDING AREA.
12. DISTURB AREAS FOR SEWER AND WATER LINE INSTALLATION AS REQUIRED. INSTALL EROSION MEASURES IN THESE AREAS AS NEEDED, REMOVE UPON REPLACEMENT OF PAVING.
13. STABILIZE SEWER AND WATER LINE EXCAVATIONS IN NO PAVED AREAS IMMEDIATELY UPON BACKFILL OF EXCAVATIONS.
14. MAINTAIN THE TEMPORARY DIVERSION DITCHES TO THE BASIN THROUGHOUT GRADING OPERATIONS.
15. INSTALL RECP (WESTERN EXCELSIOR SR-1 ALL NATURAL OR EQUIVALENT) AND SEED ON FINISHED 3:1 SLOPES WITHIN 7 DAYS OF COMPLETION.
16. INSTALL INLET PROTECTION DEVICES AS DETAILED ON THE PLAN AS INLETS ARE INSTALLED.
17. INSPECT EROSION AND SEDIMENTATION CONTROL DEVICES AS REQUIRED THROUGHOUT THE DURATION OF THE PROJECT.
18. MAINTAIN EROSION AND SEDIMENTATION CONTROL DEVICES AS REQUIRED THROUGHOUT THE DURATION OF THE PROJECT.
19. DISTURBED AREAS SHALL BE STABILIZED IN ACCORDANCE WITH THE FOLLOWING SCHEDULE:
    - 19.1. PERIMETER AREAS AND SLOPES STEEPER THAN 3:1 SHALL BE STABILIZED IN 7 DAYS.
    - 19.2. ALL OTHER AREAS SHALL BE STABILIZED WITHIN 14 DAYS.
20. UPON FINAL STABILIZATION OF THE SITE AND COMPLIANCE WITH PERMIT CONDITIONS, THE EROSION CONTROL DEVICES CAN BE REMOVED AND THE AREAS STABILIZED.
21. CONVERT SEDIMENTATION BASIN 2 TO WATER QUALITY POND. REMOVE BUILT UP SEDIMENT AND GRADE POND TO FINAL CONFIGURATION. INSTALL PLANTINGS AS REQUIRED.

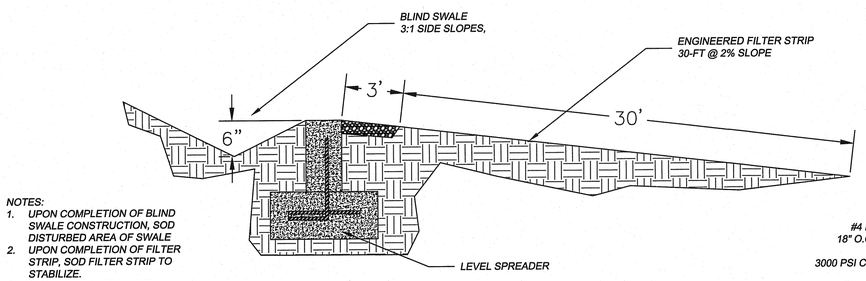

NOTES:
1. UPON COMPLETION OF BLIND SWALE CONSTRUCTION, SOD DISTURBED AREA OF SWALE
2. UPON COMPLETION OF FILTER STRIP, SOD FILTER STRIP TO STABILIZE.
3. CONTRACTOR TO MAINTAIN SOD UNTIL ESTABLISHED

LEVEL SPREADER/FILTER STRIP SECTION

NTS

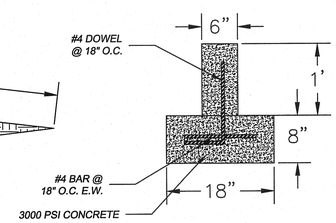

LEVEL SPREADER

NTS

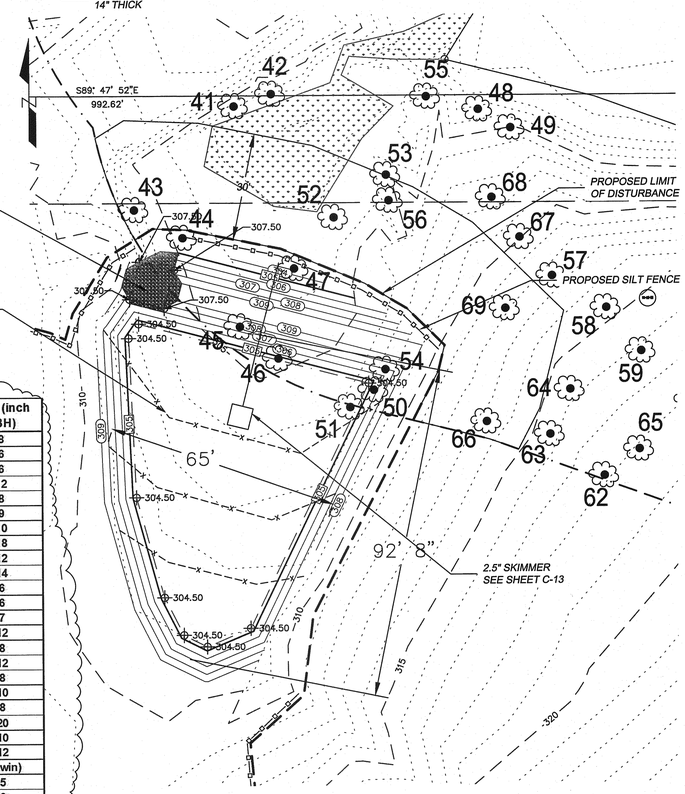

Tree #	Genus	Common name	Size (inch DBH)
41	*Platanus*	Sycamore	8
42	*Quercus*	Oak	6
43	*Liquidambar*	Sweetgum	6
44	*Quercus*	Oak	12
45	*Betula*	Birch	8
46	*Ulmus*	Elm	9
47	*Liriodendron*	Poplar	10
48	*Quercus*	Oak	18
49	*Carya*	Hickory	12
50	*Liquidambar*	Sweetgum	14
51	*Ulmus*	Elm	6
52	*Acer*	Maple	6
53	*Carya*	Hickory	7
54	*Ulmus*	Elm	12
55	*Carya*	Hickory	8
56	*Liquidambar*	Sweetgum	12
57	*Acer*	Maple	8
58	*Pinus*	Loblolly	10
59	*Pinus*	Loblolly	8
60	*Liriodendron*	Poplar	20
61	*Pinus*	Loblolly	10
62	*Quercus*	Oak	12
63	*Liquidambar*	Sweetgum	6 (twin)
64	*Prunus*	Cherry	5
65	*Liquidambar*	Sweetgum	6
66	*Quercus*	Oak	7
67	*Liriodendron*	Poplar	10
68	*Acer*	Maple	8
69	*Liquidambar*	Sweetgum	8

SKIMMER BASIN 1 DETAIL PLAN

TOTAL DISTURBED AREA = 251,300 SQ. FT. OR 5.77 AC.

GRAPHIC SCALE
(IN FEET)
1 inch = 20 ft.

BARNARD ENGINEERING, P.C.
1534 Saratoga Blvd., Indian Trail, NC 28079
(704) 421-3067
www.barnardengineeringpc.com
N.C. License No. C-3679
S.C. COA: 4599
GA. License No. PEF006337

NO.	DATE	BY	REVISION
1	3-10-14	JDB	CITY OF DURHAM FIRST SITE PLAN REVIEW & INTERNAL REVISIONS

CITY OF DURHAM TRANSFER STATION SITE PLAN SUBMITTAL
DURHAM, NC
WASTE INDUSTRIES
3301 BENSON DRIVE, SUITE 600
RALEIGH NC

INITIAL GRADING DETAIL

DESIGNED	DRAWN	CHECKED
JDB	JDB	JDB
SCALE	DATE	PROJECT NO.
AS SHOWN	10/31/13	2013-6

NORTH CAROLINA PROFESSIONAL SEAL 19665 ENGINEER JOHN D. BARNARD

SHEET: C-4

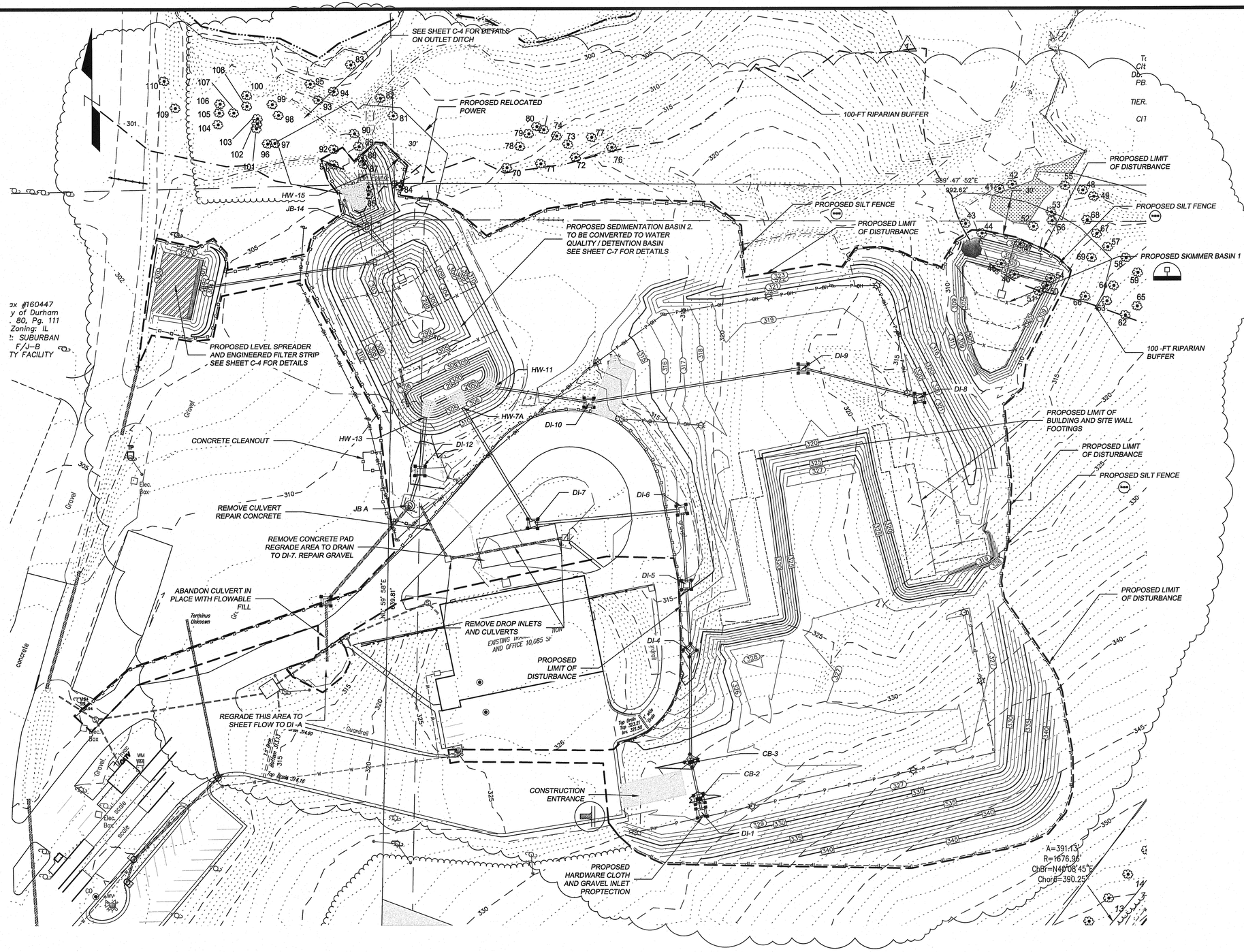

NOTES:

1. SOILS ON THIS SITE ARE COMPRISED PRIMARILY OF IREDELL AND WHITE STORE SOILS. BOTH ARE HYDROLOGIC GROUP D SOILS.
2. PARCEL 168556 IS LOCATED IN ZONE X WHICH ARE DEFINED TO BE AREAS OUTSIDE THE 0.2% ANNUAL CHANCE AND FUTURE 1% CHANCE FLOODPLAIN ACCORDING TO FEMA FIRM PANEL3720084200J, EFFECTIVE MAY 2, 2006.
3. SEE SUBSEQUENT SHEETS FOR ADDITIONAL EROSION CONTROL DETAILS
4. THE GRADES DEPICTED ON THIS SHEET IN FUTURE TRAFFIC AREAS ARE APPROXIMATELY SUBGRADE ELEVATION. REFER TO C-6 FINAL GRADING FOR DESIGN FINAL GRADES.
5. THIS DRAWING IS INTENDED TO PROVIDE GUIDANCE TO THE CONTRACTOR REGARDING THE INTERIM GRADING STEP TO ALLOW INSTALLATION OF THE FOUNDATIONS FOR THE BUILDING AND SITE RETAINING WALLS
6. EX DI-B AND EX DI-C TO BE REMOVED. CERTAIN EXISTING STORM CULVERTS TO BE REMOVED, OTHERS TO BE ABANDONED IN PLACE.
7. SEE SHEET C-20 FOR EARTHWORK REQUIREMENTS

CONSTRUCTION SEQUENCE:

1. CONTRACTOR SHALL CONTACT DURHAM COUNTY PRIOR TO BEGINNING CONSTRUCTION TO SCHEDULE PRECONSTRUCTION MEETING.
2. CONDUCT PRE-CONSTRUCTION CONFERENCE WITH DURHAM COUNTY, THE OWNER, DESIGN ENGINEER AND THE CONTRACTOR.
3. INSTALL CONSTRUCTION ENTRANCE.
4. CLEAR ENOUGH AREA TO INSTALL PERIMETER EROSION CONTROL DEVICES FOR PHASE 1
5. INSTALL PERIMETER SILT FENCE FOR PHASE 1
6. CLEAR ENOUGH AREA TO INSTALL SKIMMER BASIN 1.
7. INSTALL SKIMMER BASIN 1.
8. CLEAR ENOUGH AREA TO INSTALL SEDIMENTATION BASIN 2.
9. INSTALL SEDIMENTATION BASIN 2. INSTALL STORM PIPING FROM POND OUTLET TO HW 16 AS SHOWN. STABILIZE THESE AREAS IMMEDIATELY WITH SOD UPON INSTALLATION.
10. INSTALL STORM PIPING FROM JB-A TO HW-14 AND GRADE THIS AREA. STABILIZE IMMEDIATELY WITH SOD UPON INSTALLATION.
11. COMPLETE CLEARING AREA AND BEGIN GRADING BUILDING PAD AND SURROUNDING AREA.
12. DISTURB AREAS FOR SEWER AND WATER LINE INSTALLATION AS REQUIRED. INSTALL EROSION MEASURES IN THESE AREAS AS NEEDED, REMOVE UPON REPLACEMENT OF PAVING.
13. STABILIZE SEWER AND WATER LINE EXCAVATIONS IN NO PAVED AREAS IMMEDIATELY UPON BACKFILL OF EXCAVATIONS.
14. MAINTAIN THE TEMPORARY DIVERSION DITCHES TO THE BASIN THROUGHOUT GRADING OPERATIONS.
15. INSTALL RECP (WESTERN EXCELSIOR SR-1 ALL NATURAL OR EQUIVALENT) AND SEED ON FINISHED 3:1 SLOPES WITHIN 7 DAYS OF COMPLETION.
16. INSTALL INLET PROTECTION DEVICES AS DETAILED ON THE PLAN AS INLETS ARE INSTALLED.
17. INSPECT EROSION AND SEDIMENTATION CONTROL DEVICES AS REQUIRED THROUGHOUT THE DURATION OF THE PROJECT.
18. MAINTAIN EROSION AND SEDIMENTATION CONTROL DEVICES AS REQUIRED THROUGHOUT THE DURATION OF THE PROJECT.
19. DISTURBED AREAS SHALL BE STABILIZED IN ACCORDANCE WITH THE FOLLOWING SCHEDULE:
    - 19.1. PERIMETER AREAS AND SLOPES STEEPER THAN 3:1 SHALL BE STABILIZED IN 7 DAYS.
    - 19.2. ALL OTHER AREAS SHALL BE STABILIZED WITHIN 14 DAYS.
20. UPON FINAL STABILIZATION OF THE SITE AND COMPLIANCE WITH PERMIT CONDITIONS, THE EROSION CONTROL DEVICES CAN BE REMOVED AND THE AREAS STABILIZED.
21. CONVERT SEDIMENTATION BASIN 2 TO WATER QUALITY POND. REMOVE BUILT UP SEDIMENT AND GRADE POND TO FINAL CONFIGURATION. INSTALL PLANTINGS AS REQUIRED.

EROSION CONTROL LEGEND

- SKIMMER BASIN — PRACTICE 6.64
- SEDIMENT FENCE — PRACTICE 6.62
- POROUS BAFFLES — PRACTICE 6.65
- HARDWARE CLOTH AND GRAVEL INLET PROTECTION — PRACTICE 6.51.1
- TEMPORARY DIVERSIONS — PRACTICE 6.21.1
- ROCK PIPE INLET PROTECTION — PRACTICE 6.55
- ROCK CHECK DAM — PRACTICE 6.83
- TEMPORARY CONSTRUCTION ENTRANCE — PRACTICE 6.06

TOTAL DISTURBED AREA = 251,300 SQ. FT. OR 5.77 AC.

GRAPHIC SCALE
0 40' 80'
(IN FEET)
1 inch = 40 ft.

BARNARD ENGINEERING, P.C.
1534 Saratoga Blvd., Indian Trail, NC 28079
(704) 421-3067
www.barnardengineeringpc.com
N.C. License No. C-3679
S.C. COA: 4599
GA. License No. PEF006337

NO.	DATE	BY	REVISION
1	3-10-14	JDB	CITY OF DURHAM FIRST SITE PLAN REVIEW & INTERVAL REVISIONS

CITY OF DURHAM TRANSFER STATION SITE PLAN SUBMITTAL
DURHAM, NC

WASTE INDUSTRIES
3301 BENSON DRIVE, SUITE 600
RALEIGH NC

INTERIM GRADING AND PHASE 2 EROSION AND SEDIMENTATION CONTROL

DESIGNED	JDB	DRAWN	JDB	CHECKED	JDB
SCALE	AS SHOWN	DATE	10/31/13	PROJECT NO.	2013-6

NORTH CAROLINA PROFESSIONAL SEAL 19665 ENGINEER JOHN D. BARNARD

SHEET:
C-5

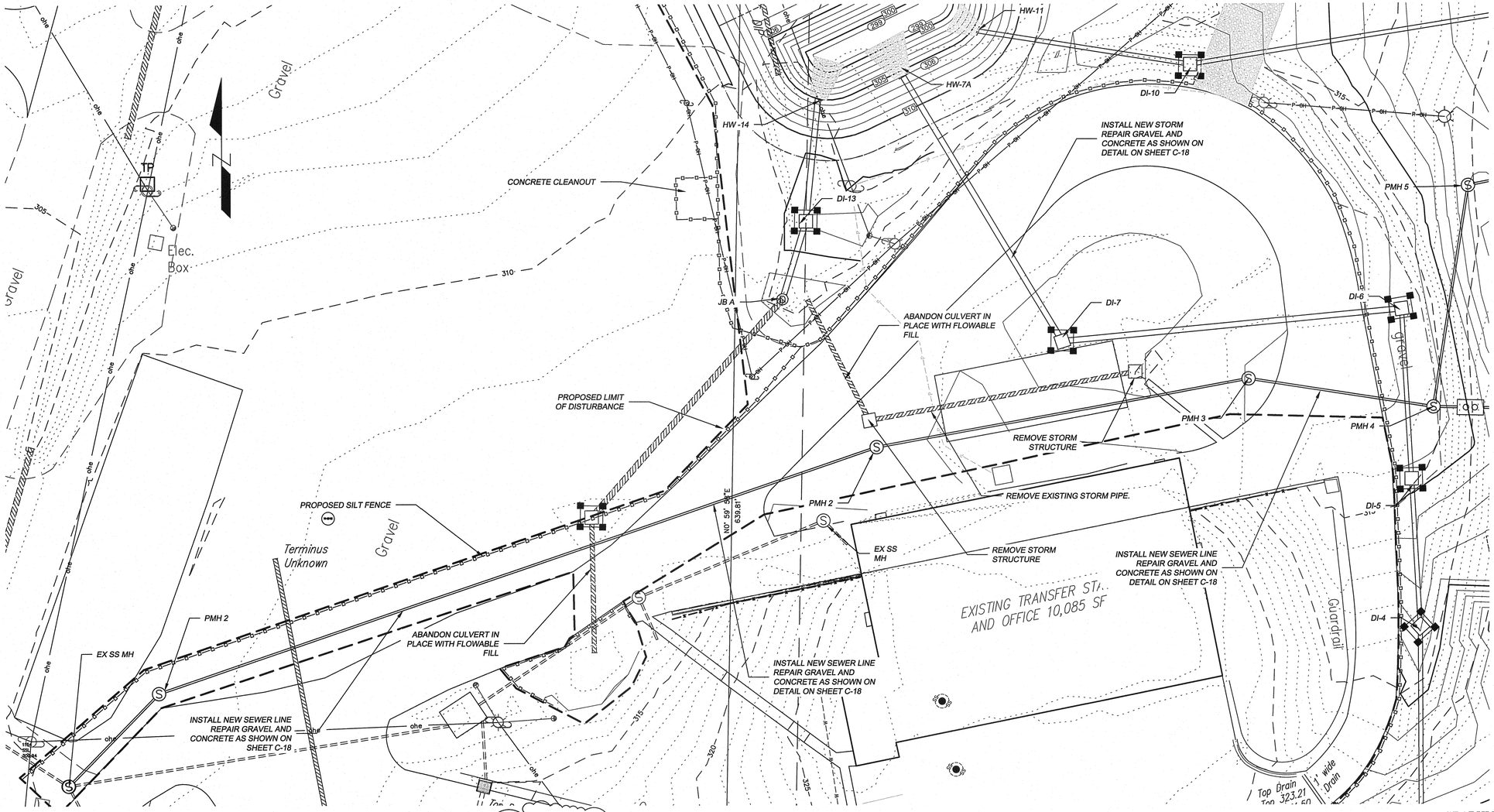

GRAPHIC SCALE

0 20' 40'

(IN FEET)
1 inch = 20 ft.

NOTES:

1. SEE SUBSEQUENT SHEETS FOR ADDITIONAL EROSION CONTROL DETAILS
2. THIS DRAWING IS INTENDED TO PROVIDE GUIDANCE TO THE CONTRACTOR REGARDING REMOVING AND REPLACING THE EXISTING STORM AND INSTALLING THE PROPOSED STORM AND SEWER,
3. THE CONTRACTOR MUST INSTALL THE TEMPORARY EROSION CONTROL MEASURES PERTINENT TO THE UTILITY INSTALLATION PRIOR TO DISTURBING THE AREA.
4. THE EXISTING TRANSFER STATION MUST REMAIN OPERATIONAL DURING THE CONSTRUCTION. THE CONTRACTOR, OWNER, OPERARTOR, AND ENGINEER SHALL COORDINATE THE CONSTRUCTION ACTIVITIES WHIHC MAY AFFECT THE TRANSFER STATION OPERATIONS AT LEAST 1 WEEK PRIOR TO BEGINNING THE SUBJECT WORK.
5. TEMPORARY MEASURES MAY BE REQUIRED DURING INSTALLATION TO MAINTAIN TRAFFIC FLOW.
6. SEE SHEET C-20 FOR EARTHWORK REQUIREMENTS.

CONSTRUCTION SEQUENCE:

1. CONTRACTOR SHALL CONTACT DURHAM COUNTY PRIOR TO BEGINNING CONSTRUCTION TO SCHEDULE PRECONSTRUCTION MEETING.
2. CONDUCT PRE-CONSTRUCTION CONFERENCE WITH DURHAM COUNTY, THE OWNER, DESIGN ENGINEER AND THE CONTRACTOR.
3. INSTALL CONSTRUCTION ENTRANCE.
4. CLEAR ENOUGH AREA TO INSTALL PERIMETER EROSION CONTROL DEVICES FOR PHASE 1
5. INSTALL PERIMETER SILT FENCE FOR PHASE 1
6. CLEAR ENOUGH AREA TO INSTALL SKIMMER BASIN 1.
7. INSTALL SKIMMER BASIN 1.
8. CLEAR ENOUGH AREA TO INSTALL SEDIMENTATION BASIN 2.
9. INSTALL SEDIMENTATION BASIN 2. INSTALL STORM PIPING FROM POND OUTLET TO HW 16 AS SHOWN. STABILIZE THESE AREAS IMMEDIATELY WITH SOD UPON INSTALLATION.
10. INSTALL STORM PIPING FROM JB-A TO HW-14 AND GRADE THIS AREA. STABILIZE IMMEDIATELY WITH SOD UPON INSTALLATION.
11. COMPLETE CLEARING AREA AND BEGIN GRADING BUILDING PAD AND SURROUNDING AREA.
12. DISTURB AREAS FOR SEWER AND WATER LINE INSTALLATION AS REQUIRED. INSTALL EROSION MEASURES IN THESE AREAS AS NEEDED, REMOVE UPON REPLACEMENT OF PAVING.
13. STABILIZE SEWER AND WATER LINE EXCAVATIONS IN NO PAVED AREAS IMMEDIATELY UPON BACKFILL OF EXCAVATIONS.
14. MAINTAIN THE TEMPORARY DIVERSION DITCHES TO THE BASIN THROUGHOUT GRADING OPERATIONS.
15. INSTALL RECP (WESTERN EXCELSIOR SR-1 ALL NATURAL OR EQUIVALENT) AND SEED ON FINISHED 3:1 SLOPES WITHIN 7 DAYS OF COMPLETION.
16. INSTALL INLET PROTECTION DEVICES AS DETAILED ON THE PLAN AS INLETS ARE INSTALLED.
17. INSPECT EROSION AND SEDIMENTATION CONTROL DEVICES AS REQUIRED THROUGHOUT THE DURATION OF THE PROJECT.
18. MAINTAIN EROSION AND SEDIMENTATION CONTROL DEVICES AS REQUIRED THROUGHOUT THE DURATION OF THE PROJECT.
19. DISTURBED AREAS SHALL BE STABILIZED IN ACCORDANCE WITH THE FOLLOWING SCHEDULE:
    - 19.1. PERIMETER AREAS AND SLOPES STEEPER THAN 3:1 SHALL BE STABILIZED IN 7 DAYS.
    - 19.2. ALL OTHER AREAS SHALL BE STABILIZED WITHIN 14 DAYS.
20. UPON FINAL STABILIZATION OF THE SITE AND COMPLIANCE WITH PERMIT CONDITIONS, THE EROSION CONTROL DEVICES CAN BE REMOVED AND THE AREAS STABILIZED.
21. CONVERT SEDIMENTATION BASIN 2 TO WATER QUALITY POND. REMOVE BUILT UP SEDIMENT AND GRADE POND TO FINAL CONFIGURATION. INSTALL PLANTINGS AS REQUIRED.

EROSION CONTROL LEGEND

- SKIMMER BASIN — PRACTICE 6.64
- SEDIMENT FENCE — PRACTICE 6.62
- POROUS BAFFLES — PRACTICE 6.65
- HARDWARE CLOTH AND GRAVEL INLET PROTECTION — PRACTICE 6.51.1
- TEMPORARY DIVERSIONS — PRACTICE 6.21.1
- ROCK PIPE INLET PROTECTION — PRACTICE 6.55
- ROCK CHECK DAM — PRACTICE 6.83
- TEMPORARY CONSTRUCTION ENTRANCE — PRACTICE 6.06

TOTAL DISTURBED AREA = 251,300 SQ. FT. OR 5.77 AC.

BARNARD ENGINEERING, P.C.
1534 Saratoga Blvd., Indian Trail, NC 28079
(704) 421-3067
www.barnardengineeringpc.com
N.C. License No. C-3679
S.C. COA: 4509
GA. License No. PEF006337

NO.	DATE	BY	REVISION
1	3-10-14	JDB	CITY OF DURHAM FIRST SITE PLAN REVIEW & INTERNAL REVISIONS

CITY OF DURHAM TRANSFER STATION SITE PLAN SUBMITTAL
DURHAM, NC
WASTE INDUSTRIES
3301 BENSON DRIVE, SUITE 600
RALEIGH NC

UTILITY INSTALLATION DURING INTERIM GRADING

DESIGNED	JDB	DRAWN	JDB	CHECKED	JDB
SCALE	AS SHOWN	DATE	10/31/13	PROJECT NO.	2013-6

NORTH CAROLINA PROFESSIONAL ENGINEER SEAL 19665 J. D. BARNARD

SHEET:
C-5A

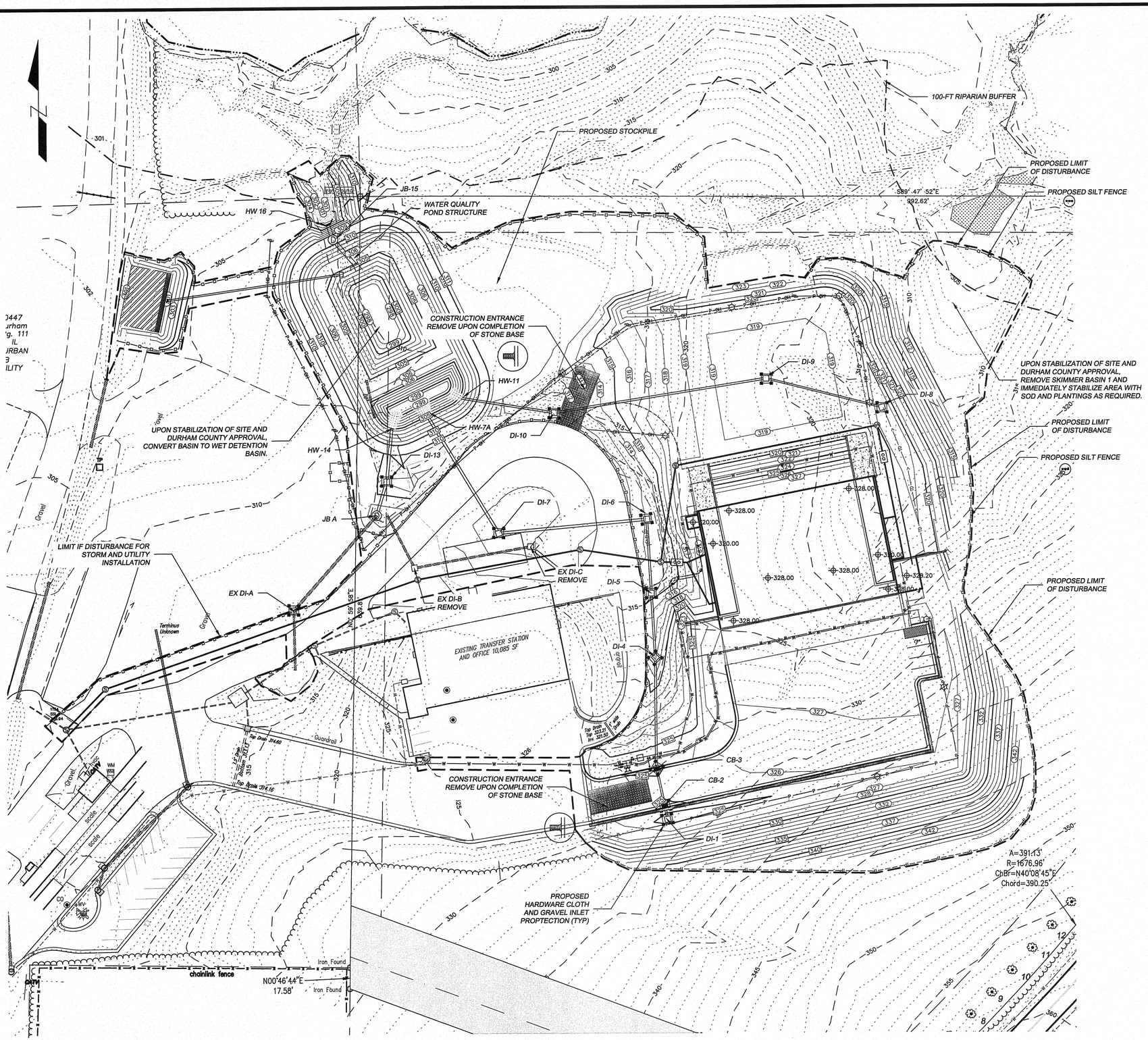

NOTES:

1. SOILS ON THIS SITE ARE COMPRISED PRIMARILY OF IREDELL AND WHITE STORE SOILS. BOTH ARE HYDROLOGIC GROUP D SOILS.
2. PARCEL 168556 IS LOCATED IN ZONE X WHICH ARE DEFINED TO BE AREAS OUTSIDE THE 0.2% ANNUAL CHANCE AND FUTURE 1% CHANCE FLOODPLAIN ACCORDING TO FEMA FIRM PANEL3720084200J, EFFECTIVE MAY 2, 2006.
3. THE GRADES DEPICTED ON THIS SHEET IN FUTURE TRAFFIC AREAS ARE TOP OF PAVEMENT ELEVATIONS.
4. SEE SHEET C-18 FOR PAVEMENT SECTIONS.
5. SEE SHEET C-18 FOR STORM SCHEDULE.
6. SEE SHEET C-20 FOR EARTHWORK REQUIREMENTS.

CONSTRUCTION SEQUENCE:

1. CONTRACTOR SHALL CONTACT DURHAM COUNTY PRIOR TO BEGINNING CONSTRUCTION TO SCHEDULE PRECONSTRUCTION MEETING.
2. CONDUCT PRE-CONSTRUCTION CONFERENCE WITH DURHAM COUNTY, THE OWNER, DESIGN ENGINEER AND THE CONTRACTOR.
3. INSTALL CONSTRUCTION ENTRANCE.
4. CLEAR ENOUGH AREA TO INSTALL PERIMETER EROSION CONTROL DEVICES FOR PHASE 1
5. INSTALL PERIMETER SILT FENCE FOR PHASE 1
6. CLEAR ENOUGH AREA TO INSTALL SKIMMER BASIN 1.
7. INSTALL SKIMMER BASIN 1.
8. CLEAR ENOUGH AREA TO INSTALL SEDIMENTATION BASIN 2.
9. INSTALL SEDIMENTATION BASIN 2. INSTALL STORM PIPING FROM POND OUTLET TO HW 16 AS SHOWN. STABILIZE THESE AREAS IMMEDIATELY WITH SOD UPON INSTALLATION.
10. INSTALL STORM PIPING FROM JB-A TO HW-14 AND GRADE THIS AREA. STABILIZE IMMEDIATELY WITH SOD UPON INSTALLATION.
11. COMPLETE CLEARING AREA AND BEGIN GRADING BUILDING PAD AND SURROUNDING AREA.
12. DISTURB AREAS FOR SEWER AND WATER LINE INSTALLATION AS REQUIRED. INSTALL EROSION MEASURES IN THESE AREAS AS NEEDED, REMOVE UPON REPLACEMENT OF PAVING.
13. STABILIZE SEWER AND WATER LINE EXCAVATIONS IN NO PAVED AREAS IMMEDIATELY UPON BACKFILL OF EXCAVATIONS.
14. MAINTAIN THE TEMPORARY DIVERSION DITCHES TO THE BASIN THROUGHOUT GRADING OPERATIONS.
15. INSTALL RECP (WESTERN EXCELSIOR SR-1 ALL NATURAL OR EQUIVALENT) AND SEED ON FINISHED 3:1 SLOPES WITHIN 7 DAYS OF COMPLETION.
16. INSTALL INLET PROTECTION DEVICES AS DETAILED ON THE PLAN AS INLETS ARE INSTALLED.
17. INSPECT EROSION AND SEDIMENTATION CONTROL DEVICES AS REQUIRED THROUGHOUT THE DURATION OF THE PROJECT.
18. MAINTAIN EROSION AND SEDIMENTATION CONTROL DEVICES AS REQUIRED THROUGHOUT THE DURATION OF THE PROJECT.
19. DISTURBED AREAS SHALL BE STABILIZED IN ACCORDANCE WITH THE FOLLOWING SCHEDULE:
    - 19.1. PERIMETER AREAS AND SLOPES STEEPER THAN 3:1 SHALL BE STABILIZED IN 7 DAYS.
    - 19.2. ALL OTHER AREAS SHALL BE STABILIZED WITHIN 14 DAYS.
20. UPON FINAL STABILIZATION OF THE SITE AND COMPLIANCE WITH PERMIT CONDITIONS, THE EROSION CONTROL DEVICES CAN BE REMOVED AND THE AREAS STABILIZED.
21. CONVERT SEDIMENTATION BASIN 2 TO WATER QUALITY POND. REMOVE BUILT UP SEDIMENT AND GRADE POND TO FINAL CONFIGURATION. INSTALL PLANTINGS AS REQUIRED.

EROSION CONTROL LEGEND

- SKIMMER BASIN — PRACTICE 6.64
- SEDIMENT FENCE — PRACTICE 6.62
- POROUS BAFFLES — PRACTICE 6.65
- HARDWARE CLOTH AND GRAVEL INLET PROTECTION — PRACTICE 6.61.1
- TEMPORARY DIVERSIONS — PRACTICE 6.21.1
- ROCK PIPE INLET PROTECTION — PRACTICE 6.55
- ROCK CHECK DAM — PRACTICE 6.63
- TEMPORARY CONSTRUCTION ENTRANCE — PRACTICE 6.06

TOTAL DISTURBED AREA = 251,300 SQ. FT. OR 5.77 AC.

GRAPHIC SCALE
0 40' 80'
(IN FEET)
1 inch = 40 ft.

BARNARD ENGINEERING, P.C.
1534 Saratoga Blvd., Indian Trail, NC 28079
(704) 421-3067
www.barnardengineeringpc.com
N.C. License No. C-3679
S.C. COA: 4599
GA. License No. PEF006337

NO.	DATE	BY	REVISION
1	3-10-14	JDB	CITY OF DURHAM FIRST SITE PLAN REVIEW & INTERNAL REVISIONS

CITY OF DURHAM TRANSFER STATION SITE PLAN SUBMITTAL
DURHAM, NC
WASTE INDUSTRIES
3301 BENSON DRIVE, SUITE 600
RALEIGH NC

FINAL GRADING

DESIGNED	DRAWN	CHECKED
JDB	JDB	JDB
SCALE	DATE	PROJECT NO.
AS SHOWN	10/31/13	2013-6

NORTH CAROLINA PROFESSIONAL SEAL 19665 ENGINEER JOSEPH D. BARNARD

SHEET:
C-6

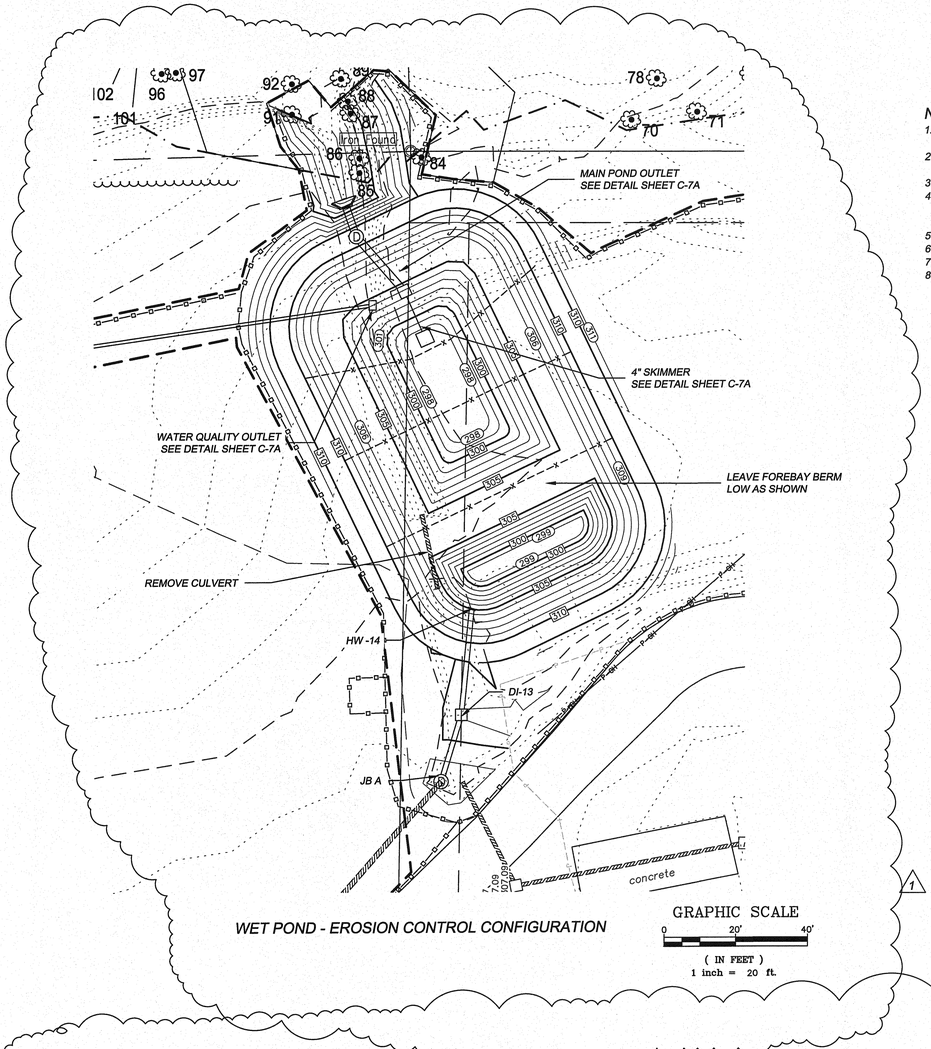

WET POND - EROSION CONTROL CONFIGURATION

NOTES:

1. CONSTRUCT POND AS SHOWN INITIALLY IN THE EROSION CONTROL CONFIGURATION.
2. BLIND OFF THE ORIFICE OPENINGS ON THE WATER QUALITY STRUCTURE.
3. INSTALL SKIMMER AS SHOWN.
4. ONCE THE SITE HAS BEEN STABILIZED AND UPON APPROVAL FROM DURHAM COUNTY, REMOVE ACCUMULATED SEDIMENT AND CONSTRUCT FOREBAY BERM.
5. REMOVE SKIMMER AND CLOSE OPENING
6. OPEN OUTLETS ON THE WATER QUALITY STRUCTURE
7. PLANT PERMANENT PLANTINGS AS SHOWN ON SHEET C-10.
8. SEE SHEET C-20 FOR EARTHWORK REQUIREMENTS.

CONSTRUCTION SEQUENCE:

1. CONTRACTOR SHALL CONTACT DURHAM COUNTY PRIOR TO BEGINNING CONSTRUCTION TO SCHEDULE PRECONSTRUCTION MEETING.
2. CONDUCT PRE-CONSTRUCTION CONFERENCE WITH DURHAM COUNTY, THE OWNER, DESIGN ENGINEER AND THE CONTRACTOR.
3. INSTALL CONSTRUCTION ENTRANCE.
4. CLEAR ENOUGH AREA TO INSTALL PERIMETER EROSION CONTROL DEVICES FOR PHASE 1
5. INSTALL PERIMETER SILT FENCE FOR PHASE 1
6. CLEAR ENOUGH AREA TO INSTALL SKIMMER BASIN 1.
7. INSTALL SKIMMER BASIN 1.
8. CLEAR ENOUGH AREA TO INSTALL SEDIMENTATION BASIN 2.
9. INSTALL SEDIMENTATION BASIN 2. INSTALL STORM PIPING FROM POND OUTLET TO HW 16 AS SHOWN. STABILIZE THESE AREAS IMMEDIATELY WITH SOD UPON INSTALLATION.
10. INSTALL STORM PIPING FROM JB-A TO HW-14 AND GRADE THIS AREA. STABILIZE IMMEDIATELY WITH SOD UPON INSTALLATION.
11. COMPLETE CLEARING AREA AND BEGIN GRADING BUILDING PAD AND SURROUNDING AREA.
12. DISTURB AREAS FOR SEWER AND WATER LINE INSTALLATION AS REQUIRED. INSTALL EROSION MEASURES IN THESE AREAS AS NEEDED, REMOVE UPON REPLACEMENT OF PAVING.
13. STABILIZE SEWER AND WATER LINE EXCAVATIONS IN NO PAVED AREAS IMMEDIATELY UPON BACKFILL OF EXCAVATIONS.
14. MAINTAIN THE TEMPORARY DIVERSION DITCHES TO THE BASIN THROUGHOUT GRADING OPERATIONS.
15. INSTALL RECP (WESTERN EXCELSIOR SR-1 ALL NATURAL OR EQUIVALENT) AND SEED ON FINISHED 3:1 SLOPES WITHIN 7 DAYS OF COMPLETION.
16. INSTALL INLET PROTECTION DEVICES AS DETAILED ON THE PLAN AS INLETS ARE INSTALLED.
17. INSPECT EROSION AND SEDIMENTATION CONTROL DEVICES AS REQUIRED THROUGHOUT THE DURATION OF THE PROJECT.
18. MAINTAIN EROSION AND SEDIMENTATION CONTROL DEVICES AS REQUIRED THROUGHOUT THE DURATION OF THE PROJECT.
19. DISTURBED AREAS SHALL BE STABILIZED IN ACCORDANCE WITH THE FOLLOWING SCHEDULE:
    - 19.1. PERIMETER AREAS AND SLOPES STEEPER THAN 3:1 SHALL BE STABILIZED IN 7 DAYS.
    - 19.2. ALL OTHER AREAS SHALL BE STABILIZED WITHIN 14 DAYS.
20. UPON FINAL STABILIZATION OF THE SITE AND COMPLIANCE WITH PERMIT CONDITIONS, THE EROSION CONTROL DEVICES CAN BE REMOVED AND THE AREAS STABILIZED.
21. CONVERT SEDIMENTATION BASIN 2 TO WATER QUALITY POND. REMOVE BUILT UP SEDIMENT AND GRADE POND TO FINAL CONFIGURATION. INSTALL PLANTINGS AS REQUIRED.

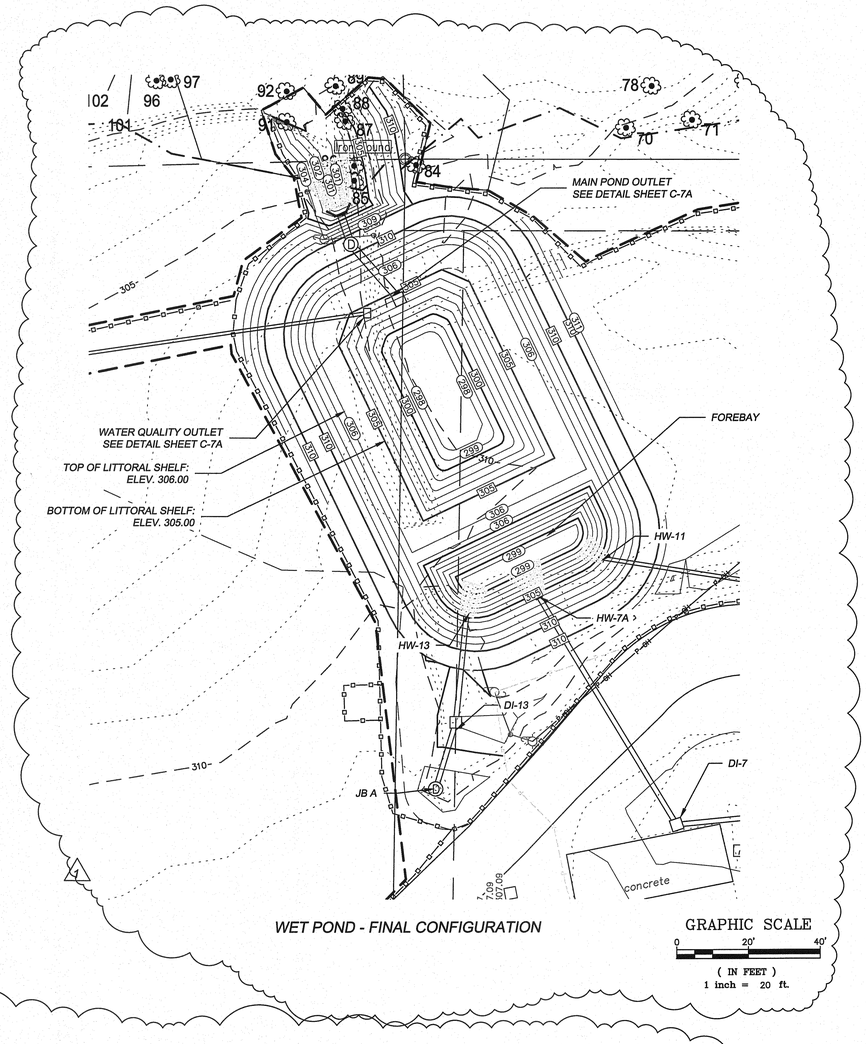

WET POND - FINAL CONFIGURATION

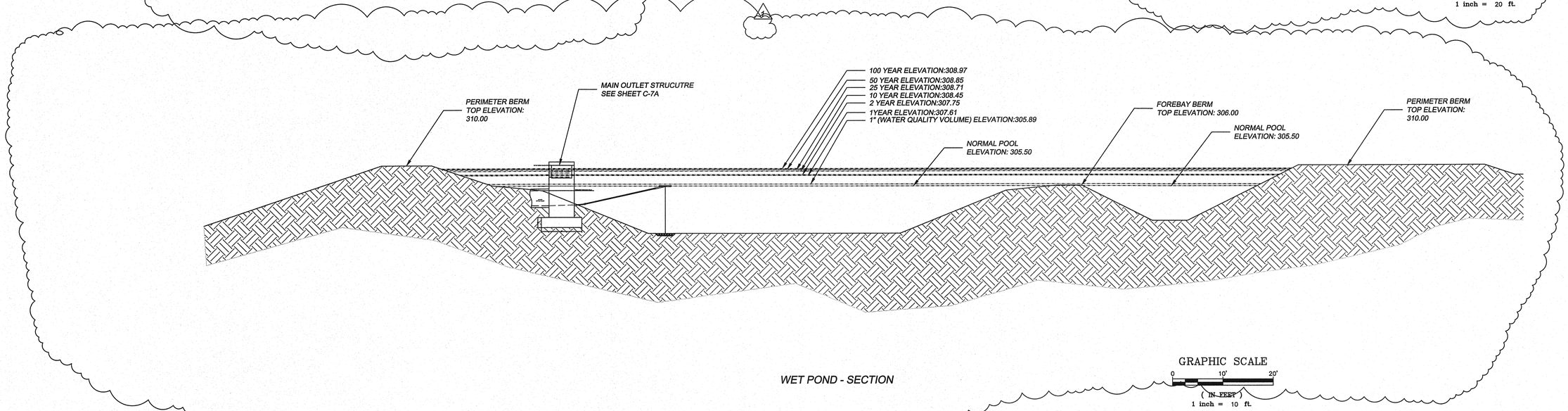

WET POND - SECTION

BARNARD ENGINEERING, P.C.
1534 Saratoga Blvd., Indian Trail, NC 28079
(704) 421-3067
www.barnardengineeringpc.com
N.C. License No. C-3679
S.C. COA: 4599
GA. License No. PEF006337

NO.	DATE	BY	REVISION
1	3-10-14	JDB	CITY OF DURHAM FIRST SITE PLAN REVIEW & INTERNAL REVISIONS

CITY OF DURHAM TRANSFER STATION SITE PLAN SUBMITTAL
DURHAM, NC
WASTE INDUSTRIES
3301 BENSON DRIVE, SUITE 600
RALEIGH NC

WET DETENTION POND DETAIL GRADING

DESIGNED	JDB	DRAWN	JDB	CHECKED	JDB
SCALE	AS SHOWN	DATE	10/31/13	PROJECT NO.:	2013-6

SHEET:

C-7

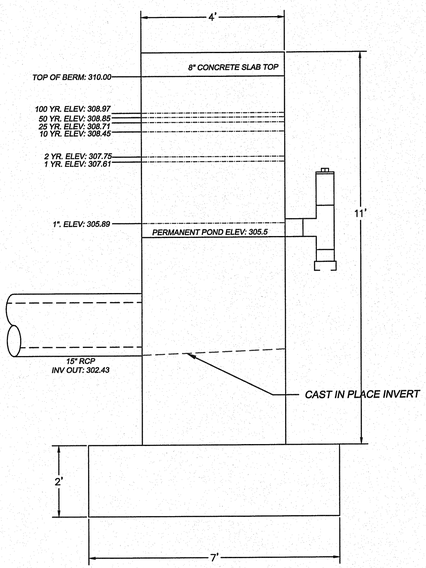

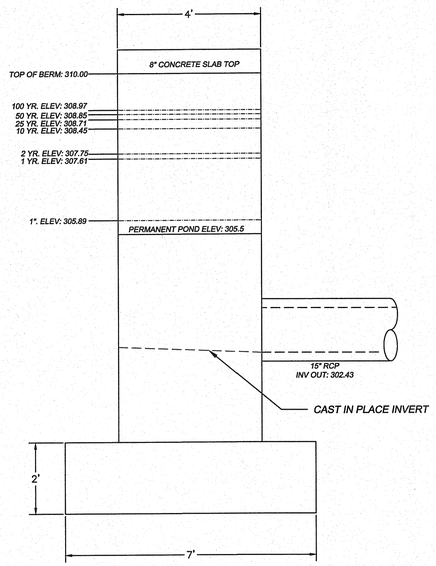

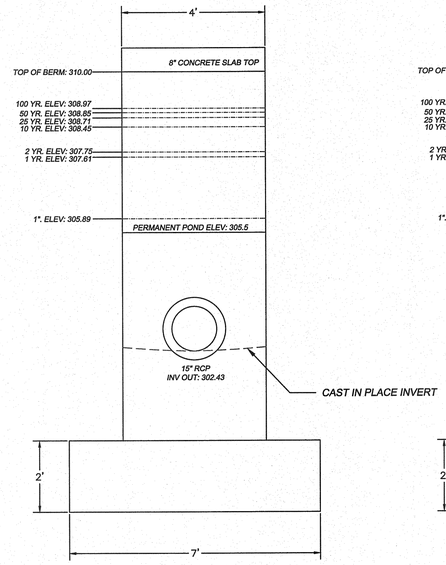

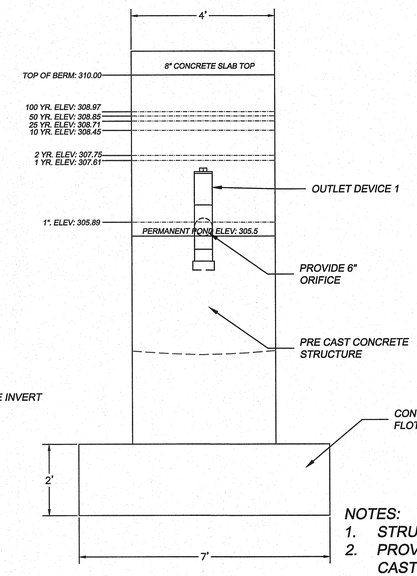

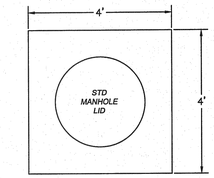

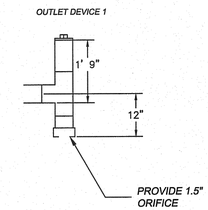

GRAPHIC SCALE
0 2' 4'
(IN FEET)
1 inch = 2 ft.

WATER QUALITY OUTLET STRUCTURE

NOTES:
1. STRUCTURES TO BE PRECAST CONCRETE
2. PROVIDE APPROVAL DRAWINGS TO ENGINEER PRIOR TO CASTING.
3. CONTRACTOR TO PROVIDE POSITIVE METHOD OF CONNECTING PRECAST STRUCTURE TO ANTIFLOTATION BLOCK.
4. ORIFICES MAY BE CORED IN THE FIELD AFTER STRUCTURE IS SET TO ALLOW FOR EASIER ADJUSTMENT OF ORIFICE ELEVATIONS.

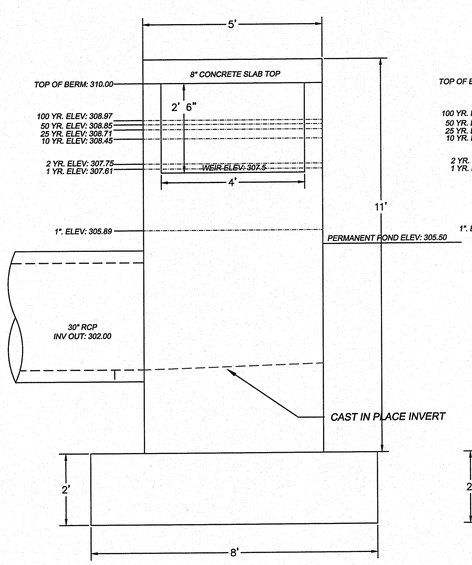

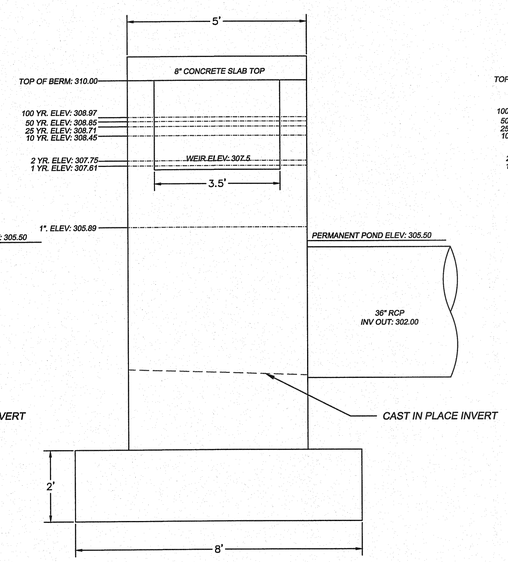

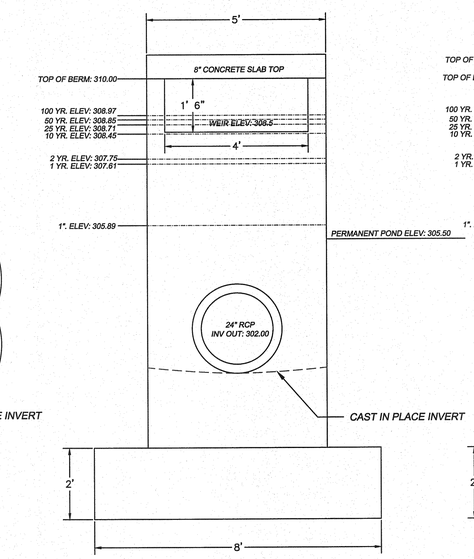

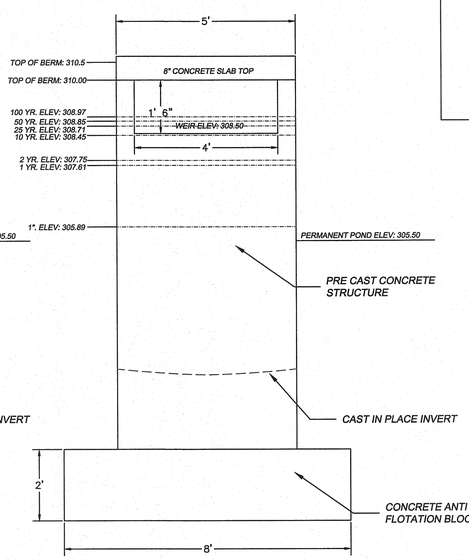

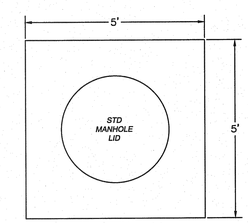

GRAPHIC SCALE
0 2' 4'
(IN FEET)
1 inch = 2 ft.

MAIN POND OUTLET STRUCTURE

BARNARD ENGINEERING, P.C.
1534 Saratoga Blvd., Indian Trail, NC 28079
(704) 421-3067
www.barnardengineeringpc.com
N.C. License No. C-3679
S.C. COA: 4509
GA. License No. PEF006337

NO.	DATE	BY	REVISION
1	3-10-14	JDB	CITY OF DURHAM FIRST SITE PLAN REVIEW & INTERNAL REVISIONS

CITY OF DURHAM TRANSFER STATION SITE PLAN SUBMITTAL
DURHAM, NC
WASTE INDUSTRIES
3301 BENSON DRIVE, SUITE 600
RALEIGH NC

WET POND OUTLETS

DESIGNED	DRAWN	CHECKED
JDB	JDB	JDB
SCALE	DATE	PROJECT NO.
AS SHOWN	10/31/13	2013-6

NORTH CAROLINA PROFESSIONAL SEAL 19665 ENGINEER JOHN D. BARNARD
5/6/14

SHEET:
C-7A

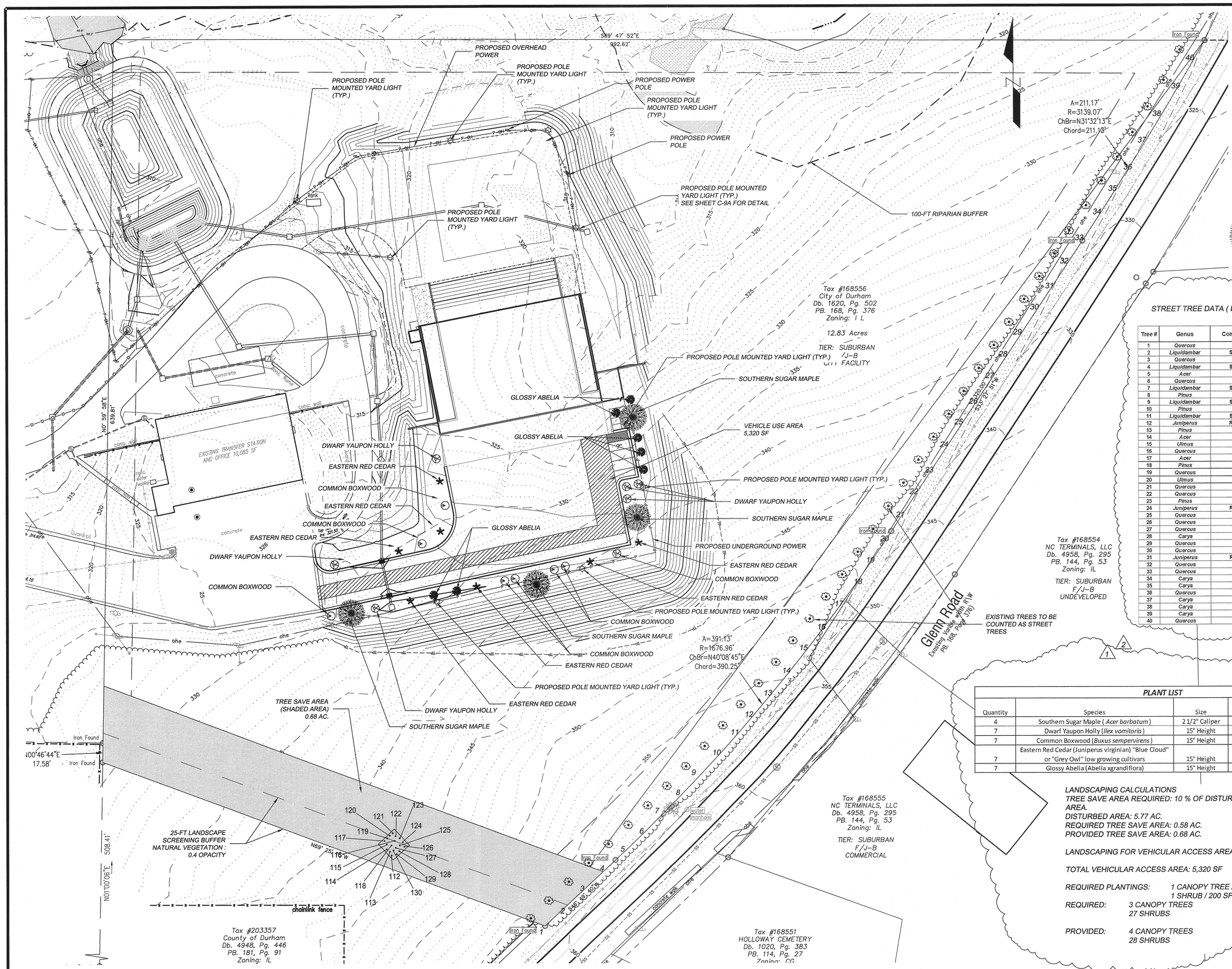

STREET TREE DATA (EXISTING TREES)

Tree #	Genus	Common name	Size (inch DBH)
1	*Quercus*	Oak	6
2	*Liquidambar*	Sweetgum	4
3	*Quercus*	Oak	6
4	*Liquidambar*	Sweetgum	6
5	*Acer*	Maple	4
6	*Quercus*	Oak	7
7	*Liquidambar*	Sweetgum	3
8	*Pinus*	Loblolly	10
9	*Liquidambar*	Sweetgum	6
10	*Pinus*	Loblolly	5
11	*Liquidambar*	Sweetgum	4 (twin)
12	*Juniperus*	Red Cedar	6 (twin)
13	*Pinus*	Loblolly	6
14	*Acer*	Maple	4 (twin)
15	*Ulmus*	Elm	6
16	*Quercus*	Oak	15
17	*Acer*	Maple	5
18	*Pinus*	Loblolly	6
19	*Quercus*	Oak	4
20	*Ulmus*	Elm	6
21	*Quercus*	Oak	3
22	*Quercus*	Oak	3
23	*Pinus*	Loblolly	6
24	*Juniperus*	Red Cedar	7
25	*Quercus*	Oak	8
26	*Quercus*	Oak	4
27	*Quercus*	Oak	5
28	*Carya*	Hickory	8
29	*Quercus*	Oak	15
30	*Quercus*	Oak	18
31	*Juniperus*	Red Cedar	6
32	*Quercus*	Oak	10
33	*Quercus*	Oak	10
34	*Carya*	Hickory	6
35	*Carya*	Hickory	4 (twin)
36	*Quercus*	Oak	6
37	*Carya*	Hickory	8
38	*Carya*	Hickory	8
39	*Carya*	Hickory	8
40	*Quercus*	Oak	4

PLANT LIST

Quantity	Species	Size	Use	Required Planting Area
4	Southern Sugar Maple (*Acer barbatum*)	2 1/2" Caliper	Vehicular Access Area	350 sf Min.
7	Dwarf Yaupon Holly (*Ilex vomitoria*)	15" Height	Vehicular Access Area	N/A
7	Common Boxwood (*Buxus sempervirens*)	15" Height	Vehicular Access Area	N/A
7	Eastern Red Cedar (Juniperus virginian) "Blue Cloud" or "Grey Owl" low growing cultivars	15" Height	Vehicular Access Area	N/A
7	Glossy Abelia (Abelia xgrandiflora)	15" Height	Vehicular Access Area	N/A

LANDSCAPING CALCULATIONS
TREE SAVE AREA REQUIRED: 10 % OF DISTURBED AREA.
DISTURBED AREA: 5.77 AC.
REQUIRED TREE SAVE AREA: 0.58 AC.
PROVIDED TREE SAVE AREA: 0.68 AC.

LANDSCAPING FOR VEHICULAR ACCESS AREAS:

TOTAL VEHICULAR ACCESS AREA: 5,320 SF

REQUIRED PLANTINGS: 1 CANOPY TREE / 2,000 SF
1 SHRUB / 200 SF

REQUIRED: 3 CANOPY TREES
27 SHRUBS

PROVIDED: 4 CANOPY TREES
28 SHRUBS

GRAPHIC SCALE
0 40' 80'
(IN FEET)
1 inch = 40 ft.

BARNARD ENGINEERING, P.C.
1534 Saratoga Blvd., Indian Trail, NC 28079
(704) 421-3967
www.barnardengineeringpc.com
N.C. License No. C-3679
S.C. COA: 4599
GA. License No. PEF006337

NO.	DATE	BY	REVISION
1	3-10-14	JDB	CITY OF DURHAM FIRST SITE PLAN REVIEW & INTERNAL REVISIONS
2	4-24-14	JDB	CITY OF DURHAM SECOND SITE PLAN REVIEW

CITY OF DURHAM TRANSFER STATION SITE PLAN SUBMITTAL
DURHAM, NC

WASTE INDUSTRIES
3301 BENSON DRIVE, SUITE 600
RALEIGH NC

LANDSCAPING AND LIGHTING PLAN

DESIGNED	DRAWN	CHECKED
JDB	JDB	JDB
SCALE	DATE	PROJECT NO.
AS SHOWN	10/31/13	2013-6

NORTH CAROLINA PROFESSIONAL SEAL 19665 ENGINEER JOHN D. BARNARD
4/21/2014

SHEET:
C-8

Figure 1, Required Tree Planting Detail

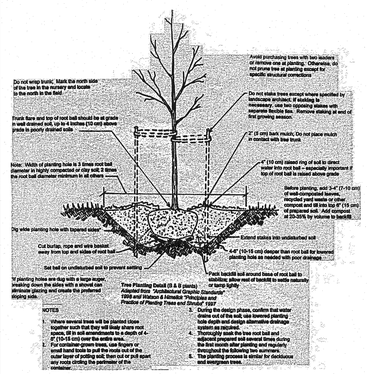

Figure 3, Recommended Shrub Planting Detail

(See the *Durham Design Manual* for Design District Details)

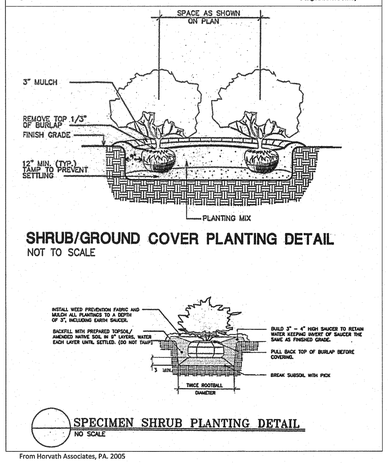

From Horvath Associates, PA. 2005

Figure 4, Required Tree Protection Fence Detail

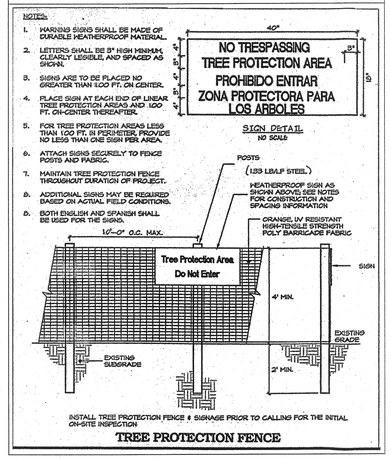

1

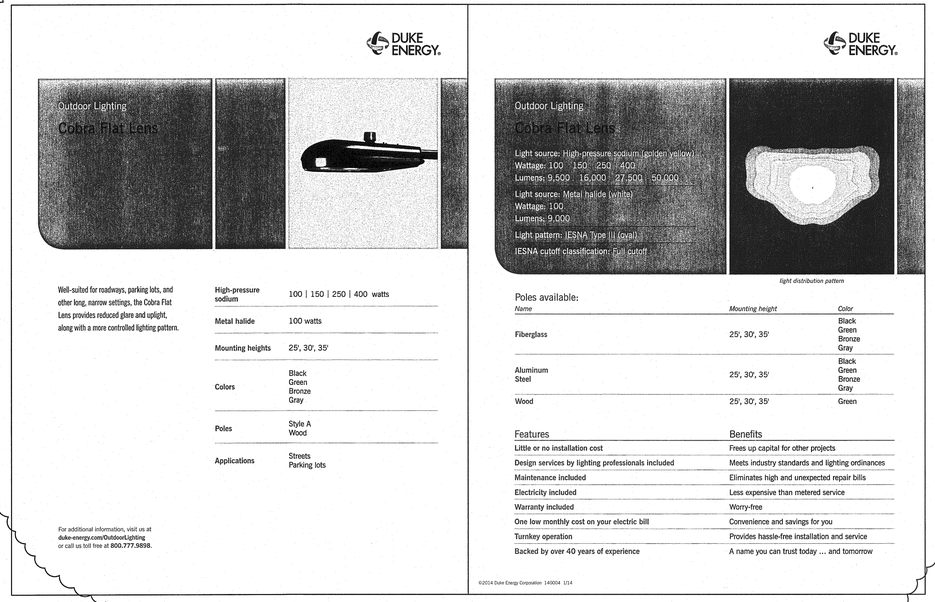

YARD LIGHTING DETAIL

NOTES:

1. *THIS LIGHT FIXTURE SHALL BE USED IN THE LOCATIONS AS SHOWN ON THE LANDSCAPING AND LIGHTING PLAN.*
2. *FIXTURES TO BE INSTALLED ON WOODEN POLES AT 30-FT ABOVE GROUND.*

BARNARD ENGINEERING, P.C.
1534 Saratoga Blvd., Indian Trail, NC 28079
(704) 421-3067
www.barnardengineeringpc.com
N.C. License No. C-3679
S.C. COA. 4599
GA. License No. PEF006337

NO.	DATE	BY	REVISION
1	3-10-14	JDB	CITY OF DURHAM FIRST SITE PLAN REVIEW

CITY OF DURHAM TRANSFER STATION SITE PLAN SUBMITTAL
DURHAM, NC
WASTE INDUSTRIES
3301 BENSON DRIVE, SUITE 600
RALEIGH NC

LANDSCAPING AND LIGHTING DETAILS

DESIGNED	JDB	DRAWN	JDB	CHECKED	JDB
SCALE	AS SHOWN	DATE	10/31/13	PROJECT NO.	2013-6

NORTH CAROLINA PROFESSIONAL ENGINEER SEAL 19665 JOHN D. BARNARD

SHEET:

C-9

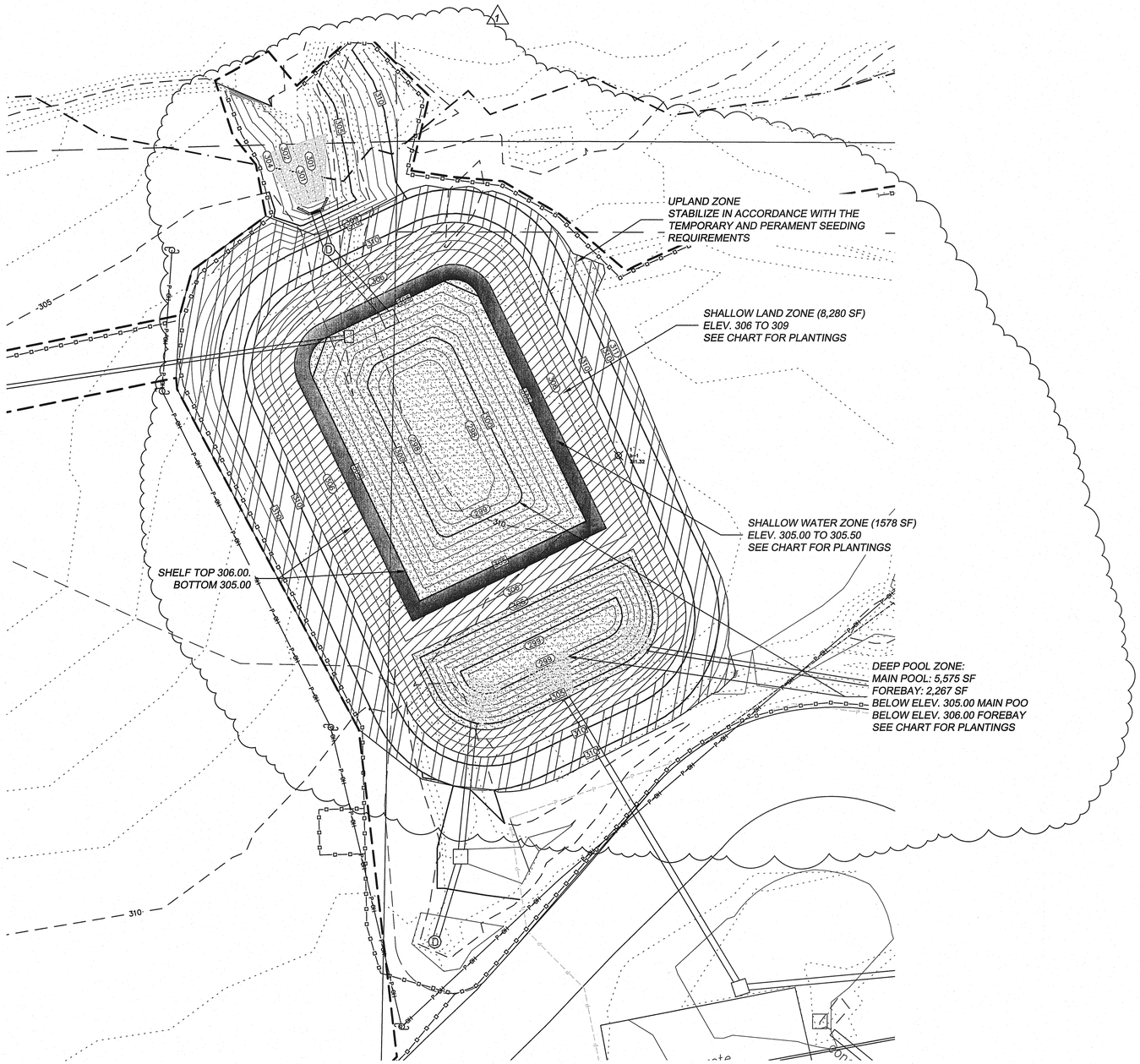

GRAPHIC SCALE

0 20' 40'

(IN FEET)
1 inch = 20 ft.

NOTES:

1. CONSTRUCT POND AS SHOWN INITIALLY IN THE EROSION CONTROL CONFIGURATION.
2. BLIND OFF THE ORIFICE OPENINGS ON THE WATER QUALITY STRUCTURE.
3. INSTALL SKIMMER AS SHOWN.
4. ONCE THE SITE HAS BEEN STABILIZED AND UPON APPROVAL FROM DURHAM COUNTY, REMOVE ACCUMULATED SEDIMENT AND CONSTRUCT FOREBAY BERM.
5. REMOVE SKIMMER AND CLOSE OPENING
6. OPEN OUTLETS ON THE WATER QUALITY STRUCTURE
7. PLANT PERMANENT PLANTINGS AS SHOWN.

CONSTRUCTION SEQUENCE:

1. CONTRACTOR SHALL CONTACT DURHAM COUNTY PRIOR TO BEGINNING CONSTRUCTION TO SCHEDULE PRECONSTRUCTION MEETING.
2. CONDUCT PRE-CONSTRUCTION CONFERENCE WITH DURHAM COUNTY, THE OWNER, DESIGN ENGINEER AND THE CONTRACTOR.
3. INSTALL CONSTRUCTION ENTRANCE.
4. CLEAR ENOUGH AREA TO INSTALL PERIMETER EROSION CONTROL DEVICES FOR PHASE 1
5. INSTALL PERIMETER SILT FENCE FOR PHASE 1
6. CLEAR ENOUGH AREA TO INSTALL SKIMMER BASIN 1.
7. INSTALL SKIMMER BASIN 1.
8. CLEAR ENOUGH AREA TO INSTALL SEDIMENTATION BASIN 2.
9. INSTALL SEDIMENTATION BASIN 2. INSTALL BOTH OUTLET STRUCTURES BUT BLIND OFF OPENINGS IN THE WATER QUALITY STRUCTURE.
10. INSTALL PROPOSED STORM COMPONENTS IN THE EXISTING PARKING AREAS .
11. INSTALL OUTLET DITCH AND LEVEL SPREADER / ENGINEERED FILTER STRIP. STABILIZE EACH AS NOTED.
12. COMPLETE CLEARING AREA AND BEGIN GRADING BUILDING PAD AND SURROUNDING AREA.
13. DISTURB AREAS FOR SEWER AND WATER LINE INSTALLATION AS REQUIRED. INSTALL EROSION MEASURES IN THESE AREAS AS NEEDED, REMOVE UPON REPLACEMENT OF PAVING.
14. STABILIZE SEWER AND WATER LINE EXCAVATIONS IN NO PAVED AREAS IMMEDIATELY UPON BACKFILL OF EXCAVATIONS.
15. MAINTAIN THE TEMPORARY DIVERSION DITCHES TO THE BASIN THROUGHOUT GRADING OPERATIONS.
16. INSTALL RECP (WESTERN EXCELSIOR SR-1 ALL NATURAL OR EQUIVALENT) AND SEED ON FINISHED 3:1 SLOPES WITHIN 7 DAYS OF COMPLETION.
17. INSTALL INLET PROTECTION DEVICES AS DETAILED ON THE PLAN AS INLETS ARE INSTALLED.
18. INSPECT EROSION AND SEDIMENTATION CONTROL DEVICES AS REQUIRED THROUGHOUT THE DURATION OF THE PROJECT.
19. MAINTAIN EROSION AND SEDIMENTATION CONTROL DEVICES AS REQUIRED THROUGHOUT THE DURATION OF THE PROJECT.
20. DISTURBED AREAS SHALL BE STABILIZED IN ACCORDANCE WITH THE FOLLOWING SCHEDULE:
    - 20.1. PERIMETER AREAS AND SLOPES STEEPER THAN 3:1 SHALL BE STABILIZED IN 7 DAYS.
    - 20.2. ALL OTHER AREAS SHALL BE STABILIZED WITHIN 14 DAYS.
21. UPON FINAL STABILIZATION OF THE SITE AND COMPLIANCE WITH PERMIT CONDITIONS, THE EROSION CONTROL DEVICES CAN BE REMOVED AND THE AREAS STABILIZED.
22. CONVERT SEDIMENTATION BASIN TO WATER QUALITY BASIN.

1

WET POND PLANTINGS				
COMMON NAME	SCIENTIFIC NAME	QUANITITY	CONTAINER SIZE	CONTAINER TYPE
DEEP POND ZONE (7,842 SF)				
Duckweed	*Lemma* spp.	655	4 cubic inch	container
Yellow Pond Lily	*Nuphar lutea* ssp. *Advena*	655	4 cubic inch	container
Needle Spikerush	*Eleocharis acicularis*	655	4 cubic inch	container
SHALLOW WATER ZONE (1,578 SF)				
Blue Flag Iris	*Iris virginica*	135		
Soft rush	*Juncus effusus var. pylaei or solutus*	135	4 cubic inch	container
Duck potato	*Sagittaria latifolia*	135	4 cubic inch	container
SHALLOW LAND ZONE (8,280 SF)				
Swamp Milkweed	Asclepias incarnata	690	4 cubic inch	container
Quill sedge	Carex tenera	690	4 cubic inch	container
Joe Pye Weed	*Eupatoriadelphus fistulosus*	690	4 cubic inch	container

SOIL SPECIFICATIONS:

SURFICIAL SOIL USED IN THE WET DETENTION BASIN FROM ELEV. 305.00 TO ELEV. 310.00 MUST ADHERE TO THE FOLLOWING REQUIREMENTS:

1. THE SOIL MIX MUST BE UNIFORM AND FREE OF STONES, STUMPS, ROOTS, OR OTHER SIMILAR MATERIAL GREATER THAN 2 INCHES.
2. SOIL TEXTURE OF THE MIX SHOULD BE LOAMY SAND, WITH NO MORE THAN 10% CLAY (USDA SOIL TEXTURAL CLASSIFICATION).
3. THE SOIL MIX MUST HAVE A MINIMUM ORGANIC CONTENT SUFFICIENT TO SUPPORT GROWTH.
4. THE PH SHOULD BE BETWEEN 5.5 AND 7.0. IF THE PH FALLS OUTSIDE OF THIS RANGE, IT MAY INCREASED WITH LIME OR DECREASED WITH IRON SULFATE AND SULFUR MIXED UNIFORMLY INTO THE SOIL PRIOR TO USE.

MAINTENANCE PROCEDURES FOR WET DETENTION BASIN:

1. IMMEDIATELY AFTER THE WET DETENTION BASIN IS ESTABLISHED, THE PLANTS ON THE VEGETATED SHELF AND PERIMETER OF THE BASIN SHOULD BE WATERED TWICE WEEKLY IF NEEDED, UNTIL THE PLANTS BECOME ESTABLISHED (COMMONLY SIX WEEKS).
2. NO PORTION OF THE WET DETENTION BASIN SHOULD BE FERTILIZED AFTER THE FIRST INITIAL FERTILIZATION THAT IS REQUIRED TO ESTABLISH THE PLANTS ON THE VEGETATED SHELF.
3. STABLE GROUNDCOVER SHOULD BE MAINTAINED IN THE DRAINAGE AREA TO REDUCE THE SEDIMENT LOAD TO THE WET DETENTION BASIN.
4. IF THE BASIN MUST BE DRAINED (PUMPED) FOR AN EMERGENCY OR TO PERFORM MAINTENANCE, THE TRANSPORT OF SEDIMENT FROM THE BASIN SHOULD BE MINIMIZED.

BARNARD ENGINEERING, P.C.
1534 Saratoga Blvd., Indian Trail, NC 28079
(704) 421-2067
www.barnardengineeringpc.com
N.C. License No. C-3679

NO.	DATE	BY	REVISION
1	3-10-14	JDB	CITY OF DURHAM FIRST SITE PLAN REVIEW

CITY OF DURHAM TRANSFER STATION SITE PLAN SUBMITTAL
DURHAM, NC

WASTE INDUSTRIES
3301 BENSON DRIVE, SUITE 600
RALEIGH NC

WET POND PLANTING SCHEDULE

DESIGNED	JDB	DRAWN	JDB	CHECKED	JDB
SCALE	AS SHOWN	DATE	10/31/13	PROJECT NO.	2013-6

NORTH CAROLINA PROFESSIONAL ENGINEER SEAL 19665 JOHN D. BARNARD

SHEET:

C-10

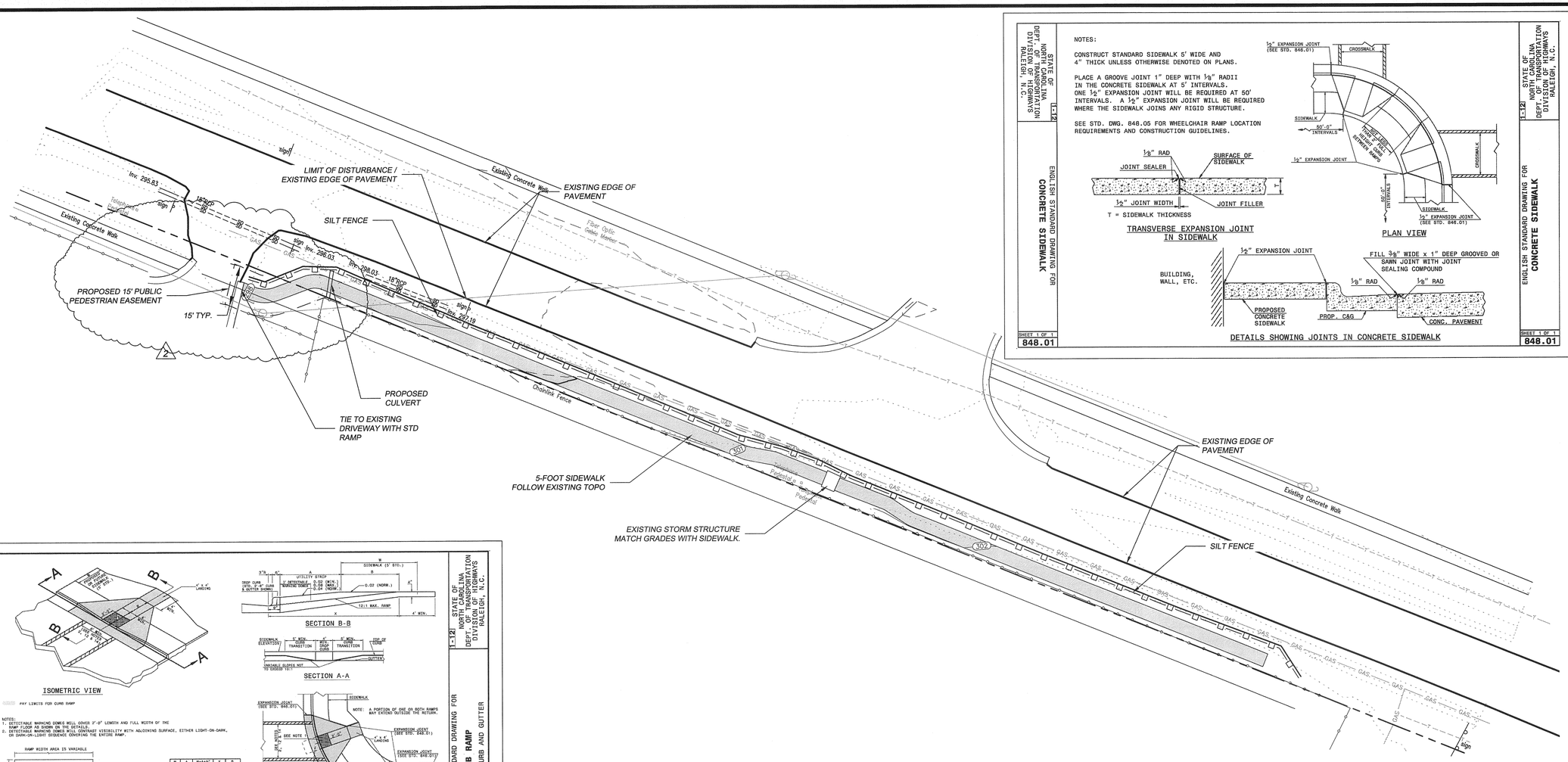

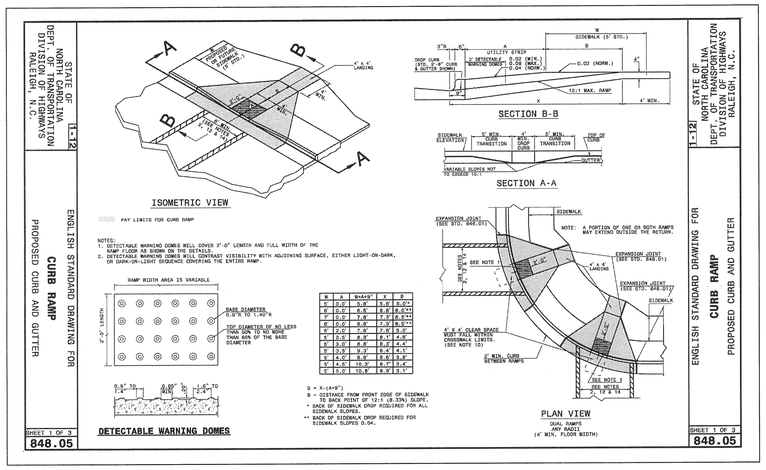

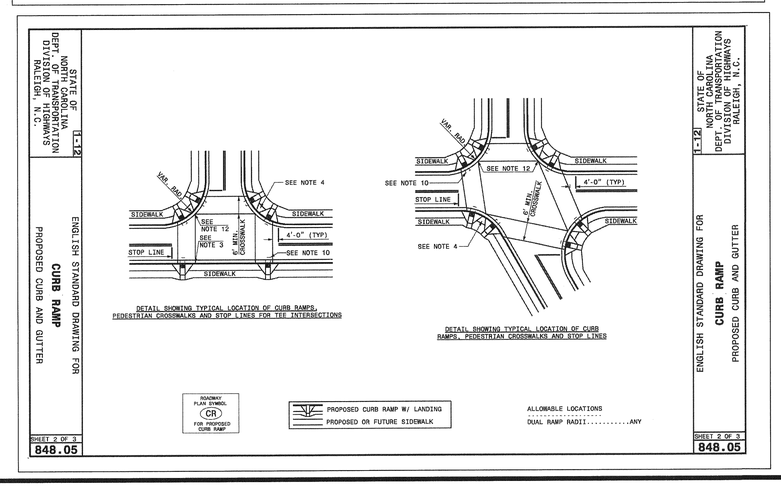

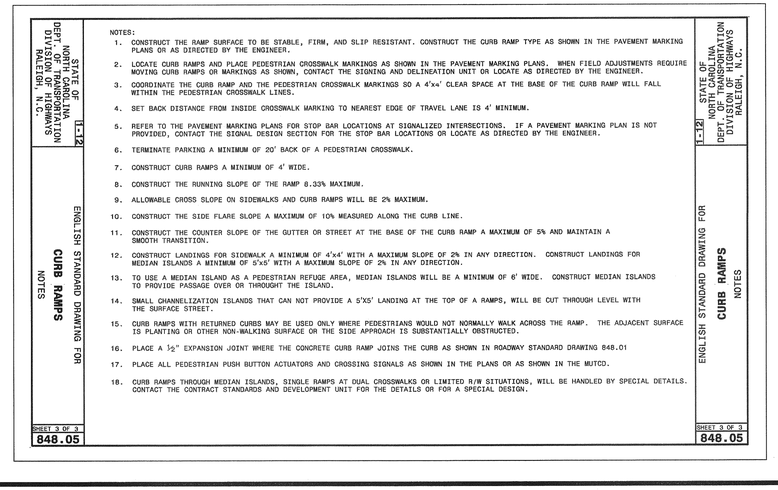

NOTES:

1. SIDEWALK TO BE IN CONFORMANCE WITH NCDOT STD 848.01.
2. CONTRACTOR TO INSTALL PERIMETER SILT FENCE AND CHECK DAMS PRIOR TO STRIPPING.
3. CONTRACTOR WILL MINIMIZE DISTURBANCE TO SLOPE AND DITCH WHERE POSSIBLE.
4. STABILIZE AREAS IMMEDIATELY UPON COMPLETION OF SIDEWALK.

GRAPHIC SCALE

0 20' 40'

(IN FEET)
1 inch = 20 ft.

BARNARD ENGINEERING, P.C.
1534 Saratoga Blvd., Indian Trail, NC 28079
(704) 421-3067
www.barnardengineeringpc.com
N.C. License No. C-3679
S.C. COA: 4599
GA. License No. PEF006337

NO.	DATE	BY	REVISION
1	3-10-14	JDB	CITY OF DURHAM FIRST SITE PLAN REVIEW & INTERNAL REVISIONS
1	4-24-14	JDB	CITY OF DURHAM SECOND SITE PLAN REVIEW

CITY OF DURHAM TRANSFER STATION SITE PLAN SUBMITTAL
DURHAM, NC

WASTE INDUSTRIES
3301 BENSON DRIVE, SUITE 600
RALEIGH NC

REQUIRED SIDEWALK - EAST CLUB BLVD

DESIGNED	JDB	DRAWN	JDB	CHECKED	JDB
SCALE	AS SHOWN	DATE	10/31/13	PROJECT NO.	2013-6

NORTH CAROLINA PROFESSIONAL SEAL 19665 ENGINEER DAVID G. BARNARD

SHEET: 1

C-11

NOTES:

a. RAILROAD BALLAST OR SURGE STONE SHALL BE USED. PAD TO BE 50'L X 20'W X 6" D AT A MINIMUM.

b. TURNING RADIUS SUFFICIENT TO ACCOMMODATE LARGE TRUCKS IS TO BE PROVIDED.

c. ENTRANCE(S) SHOULD BE LOCATED TO PROVIDE FOR MAXIMUM UTILITY BY ALL CONSTRUCTION VEHICLES.

d. MUST BE MAINTAINED IN A CONDITION WHICH WILL PREVENT TRACKING OR DIRECT FLOW OF MUD ONTO STREETS. PERIODIC TOPDRESSING WITH STONE SILL BE NECESSARY; KEEP SOME HANDY.

e. ANY MATERIAL WHICH STILL MAKES IT ONTO THE ROAD MUST BE CLEANED UP IMMEDIATELY.

NOTES: APPLICABLE AT ALL POINTS OF INGRESS & EGRESS UNTIL SITE IS STABILIZED; FREQUENT CHECKS OF THE DEVICE AND TIMELY MAINTENANCE MUST BE PROVIDED.

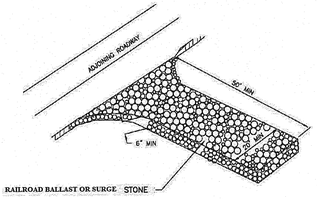

NOT TO SCALE

EROSION CONTROL DETAIL
DURHAM COUNTY, NC
ENGINEERING DEPARTMENT
REV:

CONSTRUCTION ENTRANCE

DATE	ID
02/09	CE - 1

GENERAL NOTES:

1. RIPRAP SIZE TO BE DESIGNED BY ENGINEER.
2. CHECK DAMS MAY BE USED IN SLOPING DITCHES OR CHANNELS TO SLOW VELOCITY OR TO CREATE SEDIMENT TRAPS.
3. ENSURE THAT MAXIMUM SPACING BETWEEN DAMS PLACES THE TOE OF THE UPSTREAM DAM AT THE SAME ELEVATION AS THE DOWNSTREAM DAM (SEE DIAGRAM BELOW).

A AND B ARE AT EQUAL ELEVATIONS

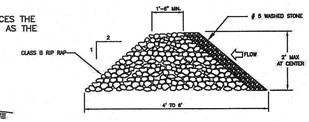

CROSS SECTION

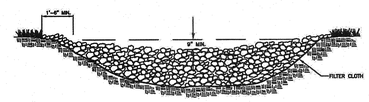

PLAN

NOT TO SCALE

EROSION CONTROL DETAIL
DURHAM COUNTY, NC
ENGINEERING DEPARTMENT
REV:

TEMPORARY ROCK CHECK DAM

DATE	ID
02/09	CD - 1

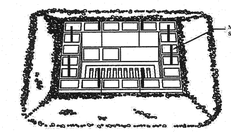

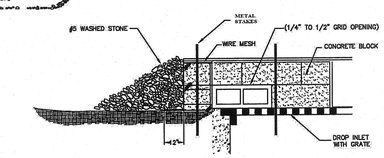

SPECIFIC APPLICATION:

THIS METHOD OF INLET PROTECTION IS APPLICABLE WHERE HEAVY FLOWS ARE EXPECTED AND WHERE OVERFLOW CAPACITY IS NECESSARY TO PREVENT EXCESSIVE PONDING AROUND THE STRUCTURE.

NOT TO SCALE

EROSION CONTROL DETAIL
DURHAM COUNTY, NC
ENGINEERING DEPARTMENT
REV:

BLOCK AND GRAVEL STONE INLET PROTECTION

DATE	ID
02/09	DI - 1

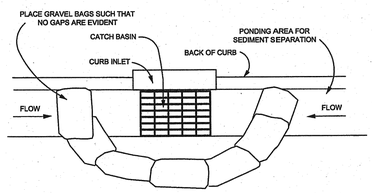

PLAN VIEW

NOTES:

1. PLACE GRAVEL BAG BARRIER ON GENTLY SLOPING STREET, WHERE WATER CAN POND AND ALLOW SEDIMENT TO SEPARATE FROM RUNNOFF.
2. USE SAND BAGS OF WOVEN GEOTEXTILE FABRIC (NOT BURLAP) AND FILL WITH ⅔ INCH (OR SMALLER) GRAVEL. BAGS MUST BE LAYERED SUCH THAT NO GAPS ARE EVIDENT.
3. INSPECT BARRIERS AND REMOVE SEDIMENT AFTER EACH STORM EVENT. SEDIMENT AND GRAVEL MUST BE REMOVED FROM THE TRAVELED WAY IMMEDIATELY.
4. WHEN INSTALLING CURB INLET PROTECTION DEVICES, NEVER BLOCK THE CURB INLET.

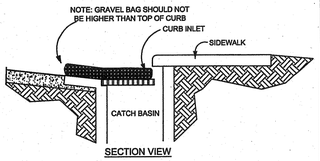

SECTION VIEW

EROSION CONTROL DETAIL
DURHAM COUNTY, NC
ENGINEERING DEPARTMENT
REV:

STANDARD GRAVEL BAG CURB INLET PROTECTION

DATE	ID
02/09	SF - 1

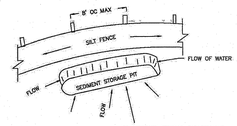

TO INCREASE STORAGE CAPACITY AND PROLONG THE LIFE OF THE SILT FENCE, IT IS GENERALLY ADVISABLE TO DIG A SEDIMENT PIT IN FRONT OF THE SILT FENCE WHENEVER POSSIBLE.

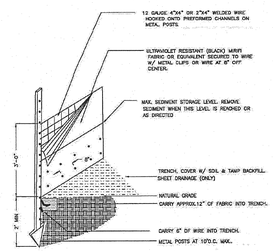

NOT TO SCALE

EROSION CONTROL DETAIL
DURHAM COUNTY, NC
ENGINEERING DEPARTMENT
REV:

TEMPORARY SILT FENCE

DATE	ID
02/09	SF-1

e. MACHINE COMPACTION OF ALL FILL IS REQUIRED. DIVERSIONS SUFFICIENT TO DIRECT ALL SEDIMENT- LADEN STORMWATER INTO A SEDIMENT CONTROL DEVICE MUST BE INSTALLED PRIOR TO CLEARING AND GRUBBING OF THE AREA (OR IN CONJUNCTION WITH THIS OPERATION IF SEDIMENT CONTROLS AND DIVERSIONS ARE INSTALLED IS EACH CRITICAL POINT IS REACHED).

b. DIVERSIONS SHOULD BE LOCATED TO MINIMIZE DAMAGES BY CONSTRUCTION OPERATIONS.

c. DIVERSIONS SHOULD BE SEEDED AND MULCHED IF THEY ARE TO REMAIN IN PLACED OVER 30 DAYS.

d. CHECK DEVICE AFTER EACH RAIN, BUT ONCE A WEEK REGARDLESS. REPAIR AS NECESSARY.

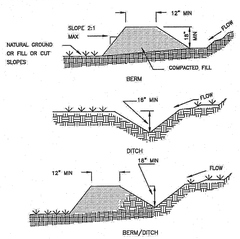

NOTES:

POSITIVE GRADE MUST BE PROVIDED TO ASSURE DRAINAGE.
IF SLOPE EXCEEDS 2%, SEED AND MULCH DIVERSION. TRY NOT TO EXCEED 5% .

MAX. DRAINAGE AREA = 5 ACRES WITHOUT SUPPORTING CALCS..
PES MUST EMPTY INTO AN
/DITCH IS MOST COMMONLY USED.

NOT TO SCALE

EROSION CONTROL DETAIL
DURHAM COUNTY, NC
ENGINEERING DEPARTMENT
REV:

DIVERSION DITCH DETAIL

DATE	ID
02/09	DD - 1

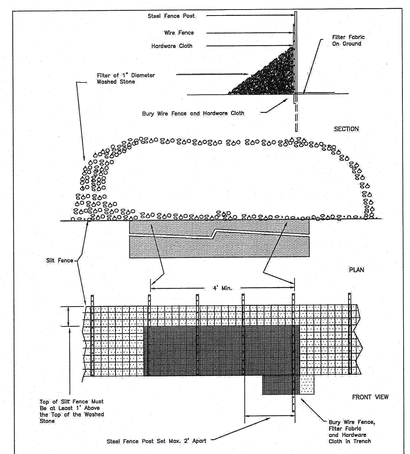

EROSION CONTROL DETAIL
DURHAM COUNTY, NC
ENGINEERING DEPARTMENT

SILT FENCE OUTLET

DATE	ID
02/09	SF-2

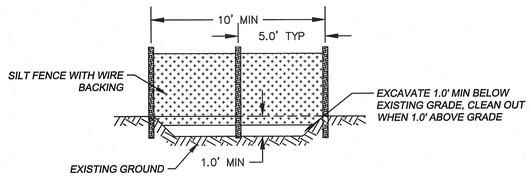

CONCRETE WASHOUT

NOT TO SCALE

BARNARD ENGINEERING, P.C.
1534 Saratoga Blvd., Indian Trail, NC 28079
(704) 421-3067
www.barnardengineeringpc.com
N.C. License No. C-3679
S.C. COA. 4599
GA. License No. PEF006337

NO.	DATE	BY	REVISION

CITY OF DURHAM TRANSFER STATION SITE PLAN SUBMITTAL
DURHAM, NC

WASTE INDUSTRIES
3301 BENSON DRIVE, SUITE 600
RALEIGH NC

EROSION CONTROL DETAILS
SHEET 1 OF 3

DESIGNED	JDB	DRAWN	JDB	CHECKED	JDB
SCALE	AS SHOWN	DATE	10/31/13	PROJECT NO.	2013-6

NORTH CAROLINA PROFESSIONAL SEAL 19665 ENGINEER JOHN D. BARNARD

SHEET:

C-12

- Dewatering—Allow the maximum reasonable detention period before the basin is completely dewatered (at least 24 hours).
- Inflow rate—Reduce the inflow velocity and divert all sediment-free runoff.

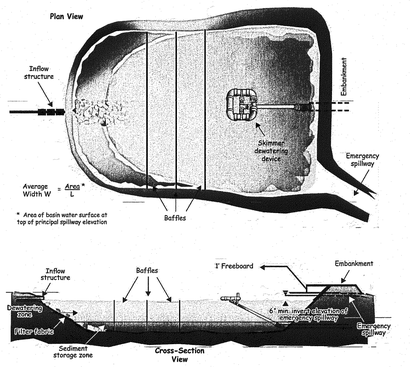

Figure 6.64c Example of a sediment basin with a skimmer outlet and emergency spillway. From Pennsylvania Erosion and Sediment Pollution Control Manual, March, 2000.

Construction Specifications

1. Clear, grub, and strip the area under the embankment of all vegetation and root mat. Remove all surface soil containing high amounts of organic matter and stockpile or dispose of it properly. Haul all objectionable material to the designated disposal area. Place temporary sediment control measures below basin as needed

2. Ensure that fill material for the embankment is free of roots, woody vegetation, organic matter, and other objectionable material. Place the fill in lifts not to exceed 9 inches, and machine compact it. Over fill the embankment 6 inches to allow for settlement.

3. Shape the basin to the specified dimensions. Prevent the skimming device from settling into the mud by excavating a shallow pit under the skimmer or providing a low support under the skimmer of stone or timber.

4. Place the barrel (typically 4-inch Schedule 40 PVC pipe) on a firm, smooth foundation of impervious soil. Do not use pervious material such as sand, gravel, or crushed stone as backfill around the pipe. Place the fill material around the pipe spillway in 4-inch layers and compact it under and around the pipe to at least the same density as the adjacent embankment. Care must be taken not to raise the pipe from the firm contact with its foundation when compacting under the pipe haunches.

Place a minimum depth of 2 feet of compacted backfill over the pipe spillway before crossing it with construction equipment. In no case should the pipe conduit be installed by cutting a trench through the dam after the embankment is complete.

5. Assemble the skimmer following the manufacturers instructions, or as designed.

6. Lay the assembled skimmer on the bottom of the basin with the flexible joint at the inlet of the barrel pipe. Attach the flexible joint to the barrel pipe and position the skimmer over the excavated pit or support. Be sure to attach a rope to the skimmer and anchor it to the side of the basin. This will be used to pull the skimmer to the side for maintenance.

7. Earthen spillways—Install the spillway in undisturbed soil to the greatest extent possible. The achievement of planned elevations, grade, design width, and entrance and exit channel slopes are critical to the successful operation of the spillway. The spillway should be lined with laminated plastic or impermeable geotextile fabric. The fabric must be wide and long enough to cover the bottom and sides and extend onto the top of the dam for anchoring in a trench. The edges may be secured with 8-inch staples or pins. The fabric must be long enough to extend down the slope and exit onto stable ground. The width of the fabric must be one piece, not joined or spliced; otherwise water can get under the fabric. If the length of the fabric is insufficient for the entire length of the spillway, multiple sections, spanning the complete width, may be used. The upper section(s) should overlap the lower section(s) so that water cannot flow under the fabric. Secure the upper edge and sides of the fabric in a trench with staples or pins. (Adapted from "A Manual for Designing, Installing and Maintaining Skimmer Sediment Basins." February, 1999. J. W. Faircloth & Son,).

8. Inlets—Discharge water into the basin in a manner to prevent erosion. Use temporary slope drains or diversions with outlet protection to divert sediment-laden water to the upper end of the pool area to improve basin trap efficiency (References: *Runoff Control Measures and Outlet Protection*).

9. Erosion control—Construct the structure so that the disturbed area is minimized. Divert surface water away from bare areas. Complete the embankment before the area is cleared. Stabilize the emergency spillway embankment and all other disturbed areas above the crest of the principal spillway immediately after construction (References: *Surface Stabilization*).

10. Install porous baffles as specified in Practice 6.65, *Porous Baffles*.

11. After all the sediment-producing areas have been permanently stabilized, remove the structure and all the unstable sediment. Smooth the area to blend with the adjoining areas and stabilize properly (References: *Surface Stabilization*).

Maintenance

Inspect skimmer sediment basins at least weekly and after each significant (one-half inch or greater) rainfall event and repair immediately. Remove sediment and restore the basin to its original dimensions when sediment accumulates to one-half the height of the first baffle. Pull the skimmer to one side so that the sediment underneath it can be excavated. Excavate the sediment from the entire basin, not just around the skimmer or the first cell. Make sure vegetation growing in the bottom of the basin does not hold down the skimmer.

Repair the baffles if they are damaged. Re-anchor the baffles if water is flowing underneath or around them.

If the skimmer is clogged with trash and there is water in the basin, usually jerking on the rope will make the skimmer bob up and down and dislodge the debris and restore flow. If this does not work, pull the skimmer over to the side of the basin and remove the debris. Also check the orifice inside the skimmer to see if it is clogged; if so remove the debris.

If the skimmer arm or barrel pipe is clogged, the orifice can be removed and the obstruction cleared with a plumber's snake or by flushing with water. Be sure and replace the orifice before repositioning the skimmer.

Check the fabric lined spillway for damage and make any required repairs with fabric that spans the full width of the spillway. Check the embankment, spillways, and outlet for erosion damage, and inspect the embankment for piping and settlement. Make all necessary repairs immediately. Remove all trash and other debris from the skimmer and pool areas.

Freezing weather can result in ice forming in the basin. Some special precautions should be taken in the winter to prevent the skimmer from plugging with ice.

2.5" *Faircloth Skimmer®* Surface Drain Cut Sheet

J. W. Faircloth & Son, Inc.
www.FairclothSkimmer.com

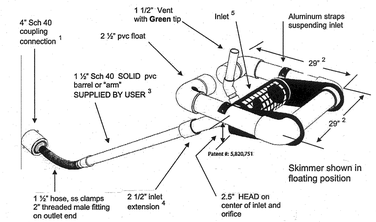

1. Skimmer can be attached to a straight 4" sch 40 pipe through the dam but the pipe may need to be anchored to the bottom at the connection so it is secure. Coupling can be removed and hose attached to outlet using the threaded 2" fitting. Typical methods used: on a metal structure a steel stubout welded on the side at the bottom with a 2" threaded coupling or reducers; on a concrete structure with a hole or orifice at the bottom, use a steel plate with a hole cut in it and coupling welded to it that will fit over the hole in the concrete and bolted to the structure with sealant; grout a 4" pvc pipe in a hole in the concrete to connect the skimmer.
2. Dimensions are approximate, not intended as plans for construction.
3. Barrel (solid, not foam core pipe) should be 1.4 times the depth of water with a minimum length of 6' so the inlet can be pulled to the side for maintenance. If more than 8' long weight may have to be added to inlet to counter the increased buoyancy.
4. Inlet tapers down from 2 ½" maximum inlet to a 1½" barrel and hose. Barrel is smaller to reduce buoyancy and tendency to lift inlet but is sufficient for flow through inlet because of slope. The inlet orifice can be reduced using the plug and cutter provided to control the outflow rate.
5. Inlet is 5" pipe between the straps with aluminum screen door for access to the 2½" inlet and orifice inside.
6. **Capacity** 6,234 cubic feet per day maximum with 2½" inlet and 2.5 head. Inlet can be reduced by installing a smaller orifice using the plug and cutter provided to adjust flow rate for the particular basin volume and drawdown time required.
7. Shipped assembled. User glues inlet extension and barrel, installs vent, cuts orifice in plug and attaches to outlet pipe or structure. Includes flexible hose, rope, orifice cutter, etc.

2-5inchCut TM 11-07 November 11, 2007

SKIMMER BASIN DETAILS

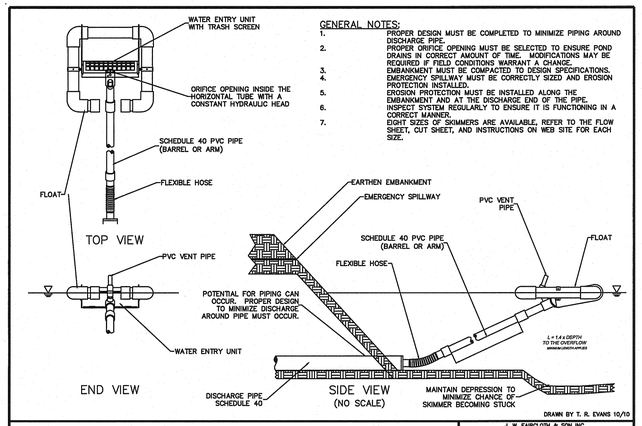

GENERAL NOTES:
1. PROPER DESIGN MUST BE COMPLETED TO MINIMIZE PIPING AROUND DISCHARGE PIPE.
2. PROPER ORIFICE OPENING MUST BE SELECTED TO ENSURE POND DRAINS IN CORRECT AMOUNT OF TIME. MODIFICATIONS MAY BE REQUIRED IF FIELD CONDITIONS WARRANT A CHANGE.
3. EMBANKMENT MUST BE COMPACTED TO DESIGN SPECIFICATIONS.
4. EMERGENCY SPILLWAY MUST BE CORRECTLY SIZED AND EROSION PROTECTION INSTALLED.
5. EROSION PROTECTION MUST BE INSTALLED ALONG THE EMBANKMENT AND AT THE DISCHARGE END OF THE PIPE.
6. INSPECT SYSTEM REGULARLY TO ENSURE IT IS FUNCTIONING IN A CORRECT MANNER.
7. EIGHT SIZES OF SKIMMERS ARE AVAILABLE. REFER TO THE FLOW SHEET, CUT SHEET, AND INSTRUCTIONS ON WEB SITE FOR EACH SIZE.

FAIRCLOTH SKIMMER® DISCHARGE SYSTEM WITH EMBANKMENT

DRAWN BY T. R. EVANS 10/10

J. W. FAIRCLOTH & SON INC.
WWW.FAIRCLOTHSKIMMER.COM
TELEPHONE: (919) 732-1244
FAX: (919) 732-1268
EMAIL: WARREN@FAIRCLOTHSKIMMER.COM

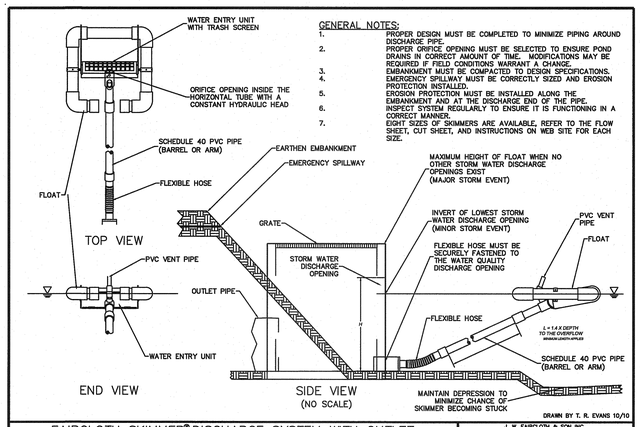

GENERAL NOTES:
1. PROPER DESIGN MUST BE COMPLETED TO MINIMIZE PIPING AROUND DISCHARGE PIPE.
2. PROPER ORIFICE OPENING MUST BE SELECTED TO ENSURE POND DRAINS IN CORRECT AMOUNT OF TIME. MODIFICATIONS MAY BE REQUIRED IF FIELD CONDITIONS WARRANT A CHANGE.
3. EMBANKMENT MUST BE COMPACTED TO DESIGN SPECIFICATIONS.
4. EMERGENCY SPILLWAY MUST BE CORRECTLY SIZED AND EROSION PROTECTION INSTALLED.
5. EROSION PROTECTION MUST BE INSTALLED ALONG THE EMBANKMENT AND AT THE DISCHARGE END OF THE PIPE.
6. INSPECT SYSTEM REGULARLY TO ENSURE IT IS FUNCTIONING IN A CORRECT MANNER.
7. EIGHT SIZES OF SKIMMERS ARE AVAILABLE. REFER TO THE FLOW SHEET, CUT SHEET, AND INSTRUCTIONS ON WEB SITE FOR EACH SIZE.

FAIRCLOTH SKIMMER® DISCHARGE SYSTEM WITH OUTLET STRUCTURE

DRAWN BY T. R. EVANS 10/10

J. W. FAIRCLOTH & SON INC.
WWW.FAIRCLOTHSKIMMER.COM
TELEPHONE: (919) 732-1244
FAX: (919) 732-1268
EMAIL: WARREN@FAIRCLOTHSKIMMER.COM

1

4" *Faircloth Skimmer®* Surface Drain Cut Sheet

J. W. Faircloth & Son, Inc.
www.FairclothSkimmer.com

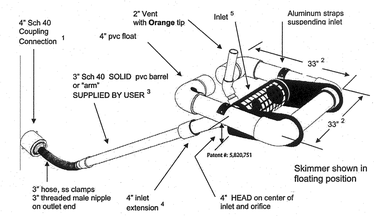

1. Coupling can be removed and hose attached to outlet using the threaded 3" nipple. Typical methods used: on a metal structure a steel stubout welded on the side at the bottom with a 3" threaded coupling or reducers; on a concrete structure with a hole or orifice at the bottom, use a steel plate with a hole cut in it and coupling welded to it that will fit over the hole in the concrete and bolted to the structure with sealant. It is possible to grout a 4" pvc pipe in a hole in the concrete to connect the skimmer but this is less secure than other methods.
2. Dimensions are approximate, not intended as plans for construction.
3. Barrel (solid, not foam core pipe) should be 1.4 times the depth of water with a minimum length of 8' so the inlet can be pulled to the side for maintenance. If more than 10' long weight may have to be added to inlet to counter the increased buoyancy.
4. Inlet tapers down from 4" maximum inlet to a 3" barrel and hose. Barrel is smaller to reduce buoyancy and tendency to lift inlet but is sufficient for flow through inlet because of slope. The inlet orifice can be reduced using the plug and cutter provided to control the outflow rate.
5. Inlet is 8" pipe between the straps with slots cut in the inlet and aluminum screen door (smaller than shown in illustration) for access to the 4" inlet and orifice inside.
6. **Capacity** 20,109 cubic feet per day maximum with 4" inlet and 4" head. Inlet can be reduced by installing a smaller orifice using the plug and cutter provided to adjust flow rate for the particular basin volume and drawdown time required.
7. Shipped assembled. User glues inlet extension and barrel, installs vent, cuts orifice in plug and attaches to outlet pipe or structure. Includes flexible hose, rope, orifice cutter, etc.

4inchCut TM 11-07 November 14, 2007

NOTES:
1. *PROVIDE A 2.5" SKIMMER WITH A 2" ORIFICE IN SKIMMER BASIN 1.*
2. *PROVIDE A 4" SKIMMER WITH A 1.6" ORIFICE IN SEDIMENT BASIN 2 (WET POND).*

BARNARD ENGINEERING, P.C.
1534 Saratoga Blvd., Indian Trail, NC 28079
(704) 821-2067
www.barnardengineering.com
N.C. License No. C-3679
S.C. COA-4599
GA. License No. PEF006337

NO.	DATE	BY	REVISION
1	3-10-14	JDB	CITY OF DURHAM FIRST SITE PLAN REVIEW

CITY OF DURHAM TRANSFER STATION SITE PLAN SUBMITTAL
DURHAM, NC
WASTE INDUSTRIES
3301 BENSON DRIVE, SUITE 600
RALEIGH NC

EROSION CONTROL DETAILS
SHEET 2 OF 3

DESIGNED	JDB	DRAWN	JDB	CHECKED	JDB
SCALE	AS SHOWN	DATE	10/31/13	PROJECT NO.	2013-6

NORTH CAROLINA PROFESSIONAL ENGINEER SEAL 19665 JOHN D. BARNARD 2/18/14

SHEET:
C-13

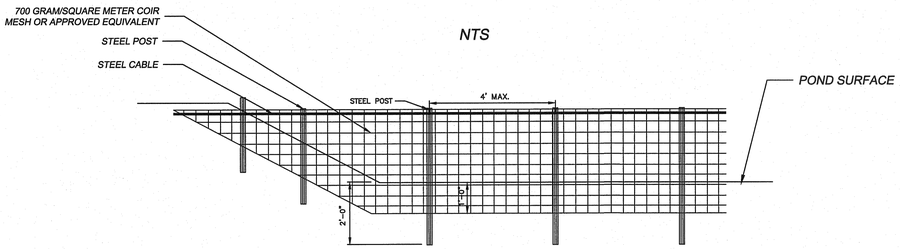

GENERAL NOTES:

1. INSTALL AS SHOWN ON THE CONSTRUCTION DRAWINGS
2. STEEL POSTS SHALL BE DRIVEN A MINIMUM OF 24" ON A 4-FT MAXIMUM SPACING.
3. THE TOP OF THE FABRIC SHALL BE 6-INCHES HIGHER THAN THE INVERT OF THE SPILLWAY
4. THE TOP OF THE BAFFLES SHOULD BE 2-INCHES BELOW THE TOP OF THE DAM.
5. ADD A SUPPORT WIRE AS SHOWN TO MINIMIZE SAGS
6. ADD CABLE STAYS AT CORNERS TO PROVIDE ADDITIONAL SUPPORT
7. THE BOTTOM OF THE FABRIC SHALL BE TRENCHED IN A MINIMUM OF 12-INCHES.
8. DO NOT SPLICE FABRIC, USE A CONTINUOUS PIECE.

MAINTENANCE NOTES:

1. FILTER BARRIERS SHALL BE INSPECTED BY THE FINANCIALLY RESPONSIBLE PARTY OR HIS AGENT IMMEDIATELY AFTER EACH RAINFALL AND AT LEAST DAILY DURING PROLONGED RAINFALL. ANY REPAIRS NEEDED SHALL BE MADE IMMEDIATELY.
2. SHOULD THE FABRIC DECOMPOSE OR BECOME INEFFECTIVE PRIOR TO THE END OF THE EXPECTED USABLE LIFE AND THE BARRIER STILL IS NECESSARY, THE FABRIC SHALL BE REPLACED PROMPTLY.
3. SEDIMENT DEPOSITS SHOULD BE REMOVED WHEN DEPOSITS REACH ONE THIRD THE HEIGHT OF THE BARRIER.
4. AFTER THE CONTRIBUTING DRAINAGE AREA HAS BEEN STABILIZED, REMOVE ALL BAFFLE MATERIALS AND UNSTABLE SEDIMENT DEPOSITS, BRING AREA TO GRADE AND STABILIZE.

POROUS BAFFLES

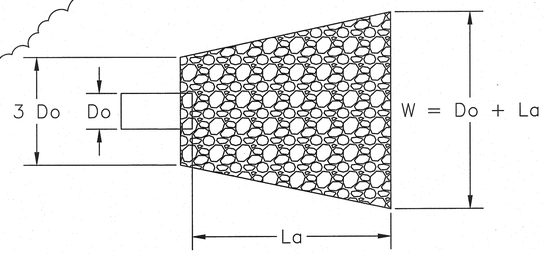

PLAN

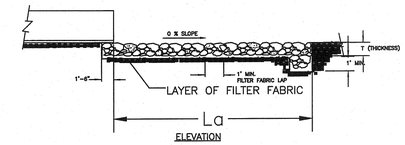

ELEVATION

RIP RAP PAD SUMMARY

PAD LOCATION	OUTLET PIPE DIAMETER (Do) (IN)	PAD LENGTH L_a (FT)	PAD WIDTH 3Do (FT)	PAD WIDTH W (FT)	PAD THICKNESS (IN)	RIP RAP d_{50} (IN)
HW 7A	24	14	6	14	9	6
HW 11	18	10	4.5	11.5	6	4
HW 13	24	9	6	11	6	4
HW 15	36	20	9	23	18	9

CONSTRUCTION SPECIFICATIONS:

1. ENSURE THE SUBGRADE FOR THE FILTER AND RIP RAP FOLLOWS THE REQUIRED LINES AND GRADES SHOWN IN THE PLAN. COMPACT ANY FILL REQUIRED IN THE SUBGRADE TO THE DENSITY OF THE SURROUNDING UNDISTURBED MATERIAL. LOW AREAS IN THE SUBGRADE ON UNDISTURBED SOIL MAY BE FILLED BY INCREASING THE RIP RAP THICKNESS.
2. THE RIP-RAP AND GRAVEL FILTER MUST CONFORM TO THE SPECIFIED GRADING LIMITS SHOWN ON THE PLANS.
3. FILTER CLOTH, WHEN USED, MUST MEET DESIGN REQUIREMENTS AND BE PROPERLY PROTECTED FROM PUNCHING OR TEARING DURING INSTALLATION. REPAIR ANY DAMAGE BY REMOVING THE RIP RAP AND PLACING ANOTHER PIECE OF FILTER CLOTH OVER THE DAMAGED AREA. ALL CONNECTING JOINTS SHOULD OVERLAP SO THE TOP LAYER IS ABOVE THE DOWNSTREAM LAYER A MINIMUM OF 1 FOOT. IF THE DAMAGE IS EXTENSIVE, REPLACE THE ENTIRE FILTER CLOTH.
4. RIPRAP MAY BE PLACED BY EQUIPMENT, BUT TAKE CARE TO AVOID DAMAGING THE FILTER.
5. THE MINIMUM THICKNESS OF THE RIPRAP SHOULD BE 1.5 TIMES THE MAXIMUM STONE DIAMETER.
6. RIPRAP MAY BE FIELD STONE OR ROUGH QUARRY STONE. IT SHOULD BE HARD, ANGULAR, HIGHLY WEATHER RESISTANT ANDS WELL GRADED.
7. CONSTRUCT THE APRON ON ZERO GRADE WITH NO OVERFILL AT THE END. MAKE THE TOP OF THE RIPRAP AT THE DOWNSTREAM END LEVEL WITH THE RECEIVING AREA OR SLIGHTLY BELOW IT.
8. ENSURE THE APRON IS PROPERLY ALIGNED WITH THE RECEIVING STREAM AND PREFERABLY STRAIGHT THROUGHOUT ITS LENGTH. IF A CURVE IS NEEDED TO FIT SITE CONDITIONS PLACE IT IN THE UPPER SECTION OF THE APRON.
9. IMMEDIATELY AFTER CONSTRUCTION, STABILIZE ALL DISTURBED AREAS WITH VEGETATION.

MAINTENANCE NOTES:

1. INSPECT RIPRAP OUTLET STRUCTURES WEEKLY AND AFTER SIGNIFICANT (1/2 INCH OR GREATER) RAINFALL EVENTS TO SEE IF ANY EROSION AROUND OR BELOW THE RIPRAP HAS TAKEN PLACE, OR IF STONES HAVE BEEN DISLODGED. IMMEDIATELY MAKE ALL NEEDED REPAIRS TO PREVENT FURTHER DAMAGE.

RIP RAP OUTLET PROTECTION

NTS

BARNARD ENGINEERING, P.C.
1534 Saratoga Blvd., Indian Trail, NC 28079
(704) 421-3067
www.barnardengineeringpc.com
N.C. License No. C-3679
S.C. COA. 4599
GA. License No. PEF006337

NO.	DATE	BY	REVISION
1	3-10-14	JDB	CITY OF DURHAM FIRST SITE PLAN REVIEW

CITY OF DURHAM TRANSFER STATION SITE PLAN SUBMITTAL
DURHAM, NC
WASTE INDUSTRIES
3301 BENSON DRIVE, SUITE 600
RALEIGH NC

EROSION CONTROL DETAILS
SHEET3 OF 3

DESIGNED	JDB	DRAWN	JDB	CHECKED	JDB
SCALE	AS SHOWN	DATE	10/31/13	PROJECT NO.	2013-6

NORTH CAROLINA PROFESSIONAL SEAL 19665 ENGINEER JOHN D. BARNARD

SHEET:
C-14

6.10

TEMPORARY SEEDING

TS

Definition Planting rapid-growing annual grasses, small grains, or legumes to provide initial, temporary cover for erosion control on disturbed areas.

Purpose [redacted]

Temporary seeding controls runoff and erosion until permanent vegetation or other erosion control measures can be established. In addition, it provides residue for soil protection and seedbed preparation, and reduces problems of mud and dust production from bare soil surfaces during construction.

Conditions Where Practice Applies On any cleared, unvegetated, or sparsely vegetated soil surface where vegetative cover is needed for less than 1 year. Applications of this practice include diversions, dams, temporary sediment basins, temporary road banks, and topsoil stockpiles.

Planning Considerations Annual plants, which sprout and grow rapidly and survive for only one season, are suitable for establishing initial or temporary vegetative cover. Temporary seeding preserves the integrity of earthen sediment control structures such as dikes, diversions, and the banks of dams and sediment basins. It can also reduce the amount of maintenance associated with these devices. For example, the frequency of sediment basin cleanouts will be reduced if watershed areas, outside the active construction zone, are stabilized.

Proper seedbed preparation, selection of appropriate species, and use of quality seed are as important in this Practice as in Practice 6.11, *Permanent Seeding*. Failure to follow established guidelines and recommendations carefully may result in an inadequate or short-lived stand of vegetation that will not control erosion.

Temporary seeding provides protection for no more than 1 year, during which time permanent stabilization should be initiated.

Specifications Complete grading before preparing seedbeds, and install all necessary erosion control practices such as, dikes, waterways, and basins. Minimize steep slopes because they make seedbed preparation difficult and increase the erosion hazard. If soils become compacted during grading, loosen them to a depth of 6-8 inches using a ripper, harrow, or chisel plow.

SEEDBED PREPARATION
Good seedbed preparation is essential to successful plant establishment. A good seedbed is well-pulverized, loose, and uniform. Where hydroseeding methods are used, the surface may be left with a more irregular surface of large clods and stones.

Liming—Apply lime according to soil test recommendations. If the pH (acidity) of the soil is not known, an application of ground agricultural limestone at the

rate of 1 to 1 1/2 tons/acre on coarse-textured soils and 2-3 tons/acre on fine-textured soils is usually sufficient. Apply limestone uniformly and incorporate into the top 4-6 inches of soil. Soils with a pH of 6 or higher need not be limed.

Fertilizer—Base application rates on soil tests. When these are not possible, apply a 10-10-10 grade fertilizer at 700-1,000 lb/acre. Both fertilizer and lime should be incorporated into the top 4-6 inches of soil. If a hydraulic seeder is used, do not mix seed and fertilizer more than 30 minutes before application.

Surface roughening—If recent tillage operations have resulted in a loose surface, additional roughening may not be required, except to break up large clods. If rainfall causes the surface to become sealed or crusted, loosen it just prior to seeding by disking, raking, harrowing, or other suitable methods. Grooves or furrow slopes steeper than 3:1 on the contour before seeding (Practice 6.03, *Surface Roughening*).

PLANT SELECTION
Select an appropriate species or species mixture from Table 6.10a for seeding in late winter and early spring, Table 6.10b for summer, and Table 6.10c for fall.

In the Mountains, December and January seedings have poor chances of success. When it is necessary to plant at these times, use recommendations for fall and a securely tacked mulch.

SEEDING
Evenly apply seed using a cyclone seeder (broadcast), drill, cultipacker seeder, or hydroseeder. Use seeding rates given in Tables 6.10a-6.10c. Broadcast seeding and hydroseeding are appropriate for steep slopes where equipment cannot be driven. Hand broadcasting is not recommended because of the difficulty in achieving a uniform distribution.

Small grains should be planted no more than 1 inch deep, and grasses and legumes no more than 1/2 inch. Broadcast seed must be covered by raking or chain dragging, and then lightly firmed with a roller or cultipacker. Hydroseeded mixtures should include a wood fiber (cellulose) mulch.

MULCHING
The use of an appropriate mulch will help ensure establishment under normal conditions, and is essential to seeding success under harsh site conditions (Practice 6.14, *Mulching*). Harsh site conditions include:

- seeding in fall for winter cover (wood fiber mulches are not considered adequate for this use),
- slopes steeper than 3:1,
- excessively hot or dry weather,
- adverse soils (shallow, rocky, or high in clay or sand), and
- areas receiving concentrated flow.

If the area to be mulched is subject to concentrated waterflow, as in channels, anchor mulch with netting (Practice 6.14, *Mulching*).

Maintenance Reseed and mulch areas where seedling emergence is poor, or where erosion occurs, as soon as possible. Do not mow. Protect from traffic as much as possible.

References
Site Preparation
6.03, Surface Roughening
6.04, Topsoiling

Surface Stabilization
6.11, Permanent Seeding
6.14, Mulching

Appendix
8.02, Vegetation Tables

Table 6.10a Temporary Seeding Recommendations for Late Winter and Early Spring

Seeding mixture

Species	Rate (lb/acre)
Rye (grain)	120
Annual lespedeza (Kobe in Piedmont and Coastal Plain, Korean in Mountains)	50

Omit annual lespedeza when duration of temporary cover is not to extend beyond June.

Seeding dates
Mountains—Above 2500 feet: Feb. 15 - May 15
Below 2500 feet: Feb. 1- May 1
Piedmont—Jan. 1 - May 1
Coastal Plain—Dec. 1 - Apr. 15

Soil amendments
Follow recommendations of soil tests or apply 2,000 lb/acre ground agricultural limestone and 750 lb/acre 10-10-10 fertilizer.

Mulch
Apply 4,000 lb/acre straw. Anchor straw by tacking with asphalt, netting, or a mulch anchoring tool. A disk with blades set nearly straight can be used as a mulch anchoring tool.

Maintenance
Refertilize if growth is not fully adequate. Reseed, refertilize and mulch immediately following erosion or other damage.

Table 6.10b Temporary Seeding Recommendations for Summer

Seeding mixture

Species	Rate (lb/acre)
German millet	40

In the Piedmont and Mountains, a small-stemmed Sudangrass may be substituted at a rate of 50 lb/acre.

Seeding dates
Mountains—May 15 - Aug. 15
Piedmont—May 1 - Aug. 15
Coastal Plain—Apr. 15 - Aug. 15

Soil amendments
Follow recommendations of soil tests or apply 2,000 lb/acre ground agricultural limestone and 750 lb/acre 10-10-10 fertilizer.

Mulch
Apply 4,000 lb/acre straw. Anchor straw by tacking with asphalt, netting, or a mulch anchoring tool. A disk with blades set nearly straight can be used as a mulch anchoring tool.

Maintenance
Refertilize if growth is not fully adequate. Reseed, refertilize and mulch immediately following erosion or other damage.

Table 6.10c Temporary Seeding Recommendations for Fall

Seeding mixture

Species	Rate (lb/acre)
Rye (grain)	120

Seeding dates
Mountains—Aug. 15 - Dec. 15
Coastal Plain and Piedmont—Aug. 15 - Dec. 30

Soil amendments
Follow soil tests or apply 2,000 lb/acre ground agricultural limestone and 1,000 lb/acre 10-10-10 fertilizer.

Mulch
Apply 4,000 lb/acre straw. Anchor straw by tacking with asphalt, netting, or a mulch anchoring tool. A disk with blades set nearly straight can be used as a mulch anchoring tool.

Maintenance
Repair and refertilize damaged areas immediately. Topdress with 50 lb/acre of nitrogen in March. If it is necessary to extent temporary cover beyond June 15, overseed with 50 lb/acre Kobe (Piedmont and Coastal Plain) or Korean (Mountains) lespedeza in late February or early March.

NOTE: CONTRACTOR MUST STABILIZE SITE IN ACCORDANCE WITH THE FOLLOWING:

1. *STABILIZE DISTURBED AREAS ON THE PERIMETER AND ON SLOPES STEEPER THAN 3:1 IN 7 DAYS*
2. *STABILIZE ALL OTHER AREAS IN 14 DAYS.*

GRAPHIC SCALE
0 40' 80'
(IN FEET)
1 inch = 40 ft.

BARNARD ENGINEERING, P.C.
1534 Saratoga Blvd., Indian Trail, NC 28079
(704) 221-3067
www.barnardengineerinpc.com
N.C. License No. C-3679
S.C. COA 4599
GA License No. PEF006337

NO.	DATE	BY	REVISION

CITY OF DURHAM TRANSFER STATION SITE PLAN SUBMITTAL
DURHAM, NC
WASTE INDUSTRIES
3301 BENSON DRIVE, SUITE 600
RALEIGH NC

TEMPORARY SEEDING SPECIFICATIONS

DESIGNED	JDB	DRAWN	JDB	CHECKED	JDB
SCALE	AS SHOWN	DATE	10/31/13	PROJECT NO.	2013-6

NORTH CAROLINA PROFESSIONAL SEAL 19665 ENGINEER JOHN D. BARNARD

SHEET:
C-15

PERMANENT SEEDING

NOTE: CONTRACTOR MUST STABILIZE SITE IN ACCORDANCE WITH THE FOLLOWING:

1. **STABILIZE DISTURBED AREAS ON THE PERIMETER AND ON SLOPES STEEPER THAN 3:1 IN 7 DAYS**
2. **STABILIZE ALL OTHER AREAS IN 14 DAYS.**

MAINTENANCE

GENERALLY, A STAND OF VEGETATON CANNOT BE DETERMINED TO BE FULLY ESTABLISHED UNTIL SOIL COVER HAS BEEN MAINTAINED FOR ONE FULL YEAR FROM PLANTING. INSPECT SEEDED AREAS FOR FAILURE AND MAKE NECESSARY REPAIRS AND RESEEDINGS WITHIN THE SAME SEASON, IF POSSIBLE.

RESEEDING–IF A STAND HAS INADEQUATE COVER, RE–EVALUATE CHOICE OF PLANT MATERIALS AND QUANTITIES OF LIME AND FERTILIZER. RE–ESTABLISH THE STAND AFTER SEEDBED PREPARATION OR OVER–SEED THE STAND. CONSIDER SEEDING TEMPORARY, ANNUAL SPECIES IF THE TIME OF YEAR IS NOT APPROPRIATE FOR PERMANENT SEEDING (PRAC– TICE 6.10, TEMPORARY SEEDING).

IF VEGETATION FAILS TO GROW, SOIL MUST BE TESTED TO DETERMINE IF ACIDITY OR NUTRIENT IMBALANCE IS RES– PONSIBLE. FERTILIZATION–ON THE TYPICAL DISTURBED SITE, FULL ESTABLISHMENT USUALLY REQUIRES REFERTILIZATION IN THE SECOND GROWING SEASON. FINE TURF REQUIRES ANNUAL MAINTENANCE FERTILIZATION (TABLE 6.12b). USE SOIL TESTS IF POSSIBLE OR FOLLOW THE GUIDELINES GIVEN FOR THE SPECIFIC SEEDING MIXTURE (TABLES 6.11c THROUGH 6.11v).

SPECIFICATION

ESTABLISHMENT OF VEGETATION SHOULD NOT BE ATTEMPTED ON SITES THAT ARE UNSUITABLE DUE TO INAPPROPRIATE SOIL TEXTURE (TABLE 6.11a), POOR DRAINAGE, CONCENTRATED OVERLAND FLOW, OR STEEPNESS OF SLOPE UNTIL MEASURES HAVE BEEN TAKEN TO CORRECT THESE PROBLEMS.

TO MAINTAIN A GOOD STAND OF VEGETATION, THE SOIL MUST MEET CERTAIN MINIMUM REQUIREMENTS AS A GROWTH MEDIUM. THE EXISTING SOIL SHOULD HAVE THESE CRITERIA:

** ENOUGH FINE–GRAINED (SILT AND CLAY) MATERIAL TO MAINTAIN ADEQUATE MOISTURE AND NUTRIENT SUPPLY (AVAILABLE WATER CAPACITY OF AT LEAST .05 INCHES WATER TO 1 INCH OF SOIL).*
**SUFFICIENT PORE SPACE TO PERMIT ROOT PENETRATION.*
** SUFFICIENT DEPTH OF SOIL TO PROVIDE AN ADEQUATE ROOT ZONE. THE DEPTH TO ROCK OR IMPERMEABLE LAYERS SUCH AS HARDPANS SHOULD BE 12 INCHES OR MORE, EXCEPT ON SLOPES STEEPER THAN 2:1 WHERE THE ADDITION OF SOIL NOT FEASIBLE.*
** A FAVORABLE pH RANGE FOR PLANT GROWTH, USUALLY 6.0–6.5.*
** FREEDOM FROM LARGE ROOTS, BRANCHES, STONES, LARGE CLODS OF EARTH, OR TRASH OF ANY KIND. CLODS AND STONES MAY BE LEFT ON SLOPES STEEPER THAN 3:1 IF THEY ARE TO BE HYDROSEEDED.*

IF ANY OF THE ABOVE CRITERIA ARE NOT MET–i.e., IF THE EXISTING SOIL IS TOO COARSE, DENSE, SHALLOW OR ACIDIC TO FOS– TER VEGETATION–SPECIAL AMENDMENTS ARE REQUIRED. THE SOIL CONDITIONERS DESCRIBED BELOW MAY BE BENEFICIAL OR, PRE– FERABLY, TOPSOIL MAY BE APPLIED IN ACCORDANCE WITH PRACTICE 6.04, TOPSOILING.

SEEDBED REQUIREMENTS

TABLE 6.11L
SEEDING NO. 2P FOR: GENTLE SLOPES, AVERAGE SOIL; LOW MAINTENANCE

SEEDING MIXTURE

SPECIES[1]	RATE (LB/ACRE)
TALL FESCUE	80
SERICEA LESPEDEZA	20
KOBE LESPEDEZA	10

SEEDING NOTES

1. AFTER AUG. 15 USE UNSCARIFIED SERICEA SEED.
2. WHERE PERIODIC MOWING IS PLANNED OR A NEAT APPEARANCE IS DESIRED, OMIT SERICEA AND INCREASE KOBE LESPEDEZA TO 40 LB/ACRE.
3. TO EXTEND SPRING SEEDING DATES INTO JUNE, ADD 15 LB/ACRE HULLED BER– MUDAGRASS. HOWEVER, AFTER MID–APR. IT IS PREFERABLE TO SEED TEMPORARY COVER.

NURSE PLANTS
BETWEEN MAY 1 AND AUG. 15, ADD 10 LB/ACRE GERMAN MILLET OR 15 LB/ACRE SUDAN– GRASS. PRIOR TO MAY 1 OR AFTER AUG. 15 ADD 40 LB/ACRE RYE (GRAIN).

SEEDING DATES	BEST	POSSIBLE
FALL:	AUG. 25 – SEPT. 15	AUG. 20 – OCT. 25
LATE WINTER:	FEB. 15 – MAR. 21	FEB. 1 – APR. 15

FALL IS BEST FOR TALL FESCUE AND LATE WINTER FOR LESPEDEZAS. OVERSEEDING OF KOBE LESPEDEZA OVER FALL–SEEDED TALL FESCUE IS VERY EFFECTIVE.

SOIL AMENDMENTS
APPLY LIME AND FERTILIZER ACCORDING TO SOIL TESTS, OR APPLY 4,000 LB/ACRE GROUND AGRICULTURAL LIMESTONE AND 1,000 LB/ACRE 10–10–10 FERTILIZER.

MULCH
APPLY 4,000 LB/ACRE GRAIN STRAW OR EQUIVALENT COVER OF ANOTHER SUITABLE MULCH. ANCHOR STRAW BY TACKING WITH ASPHALT, NETTING, OR ROVING OR BY CRIMPING WITH A MULCH ANCHORING TOOL. A DISK WITH BLADES SET NEARLY STRAIGHT CAN BE USED AS A MULCH ANCHORING TOOL.

MAINTENANCE
REFERTILIZE IN THE SECOND YEAR UNLESS GROWTH IS FULLY ADEQUATE. MAY BE MOWED ONCE OR TWICE A YEAR, BUT MOWING IS NOT NECESSARY. RESEED, FERTILIZE, AND MULCH DAMAGED AREAS IMMEDIATELY.

1 REFER TO APPENDIX 8.02 FOR BOTANICAL NAMES.

SOIL CONDITIONERS

IN ORDER TO IMPROVE THE STRUCTURE OR DRAINAGE CHARACTERISTICS OF A SOIL, THE FOLLOWING MATERIALS MAY BE ADDED. THESE AMENDMENTS SHOULD ONLY BE NECESSARY WHERE SOILS HAVE LIMITATIONS THAT MAKE THEM POOR FOR PLANT GROWTH OR FOR FINE TURF ESTABLISHMENT (SEE CHAPTER 3, VEGETATIVE CONSIDERATIONS).

PEAT–APPROPRIATE TYPES ARE SPHAGNUM MOSS PEAT, HYPNUM MOSS PEAT, REEDSEDGE PEAT, OR PEAT HUMUS, ALL FROM FRESH–WATER SOURCES. PEAT SHOULD BE SHREDDED AND CONDITIONED IN STORAGE PILES FOR AT LEAST 6 MONTHS AFTER EXCAVATION.

SAND–CLEAN AND FREE OF TOXIC MATERIALS.

VERMICULITE–HORTICULTURAL GRADE AND FREE OF TOXIC SUBSTANCES.

ROTTED MANURE–STABLE OR CATTLE MANURE NOT CONTAINING UNDUE AMOUNTS OF STRAW OR OTHER BEDDING MATERIALS.

THOROUGHLY ROTTED SAWDUST–FREE OF STONES AND DEBRIS. ADD 6 lb OF NITROGEN TO EACH CUBIC YARD.

SLUDGE–TREATED SEWAGE AND INDUSTRIAL SLUDGES ARE AVAILABLE IN VARIOUS FORMS; THESE SHOULD BE USED ONLY IN ACCORDANCE WITH LOCAL, STATE, AND FEDERAL REGULATIONS.

SPECIES SELECTION

USE THE KEY TO PERMANENT SEEDING MIXTURES (TABLE 6.11b) IN THE NCDENR EROSION CONTROL MANUAL TO SELECT THE MOST APPROPRIATE SEEDING MIXTURE BASED ON THE GENERAL SITE AND MAINTENANCE FACTORS. A LISTING OF SPECIES, INCLUDING SCIENTIFIC NAMES AND CHARACTERISTICS, IS GIVEN IN APPENDIX 8.02.

SEEDBED PREPARATION

INSTALL NECESSARY MECHANICAL EROSION AND SEDIMENTATION CONTROL PRACTICES BEFORE SEEDING, AND COMPLETE GRADING ACCORDING TO THE APPROVED PLAN.

LIME AND FERTILIZER NEEDS SHOULD BE DETERMINED BY SOIL TESTS. SOIL TESTING IS PERFORMED FREE OF CHARGE BY THE NORTH CAROLINA DEP– ARTMENT OF AGRICULTURE SOIL TESTING LABORATORY. DIRECTIONS, SAMPLE CARTONS, AND INFORMATION SHEETS ARE AVAILABLE THROUGH COUNTY AGRICULTURAL EXTENSION OFFICES OR FROM NCDA. BECAUSE THE NCDA SOIL TESTING LAB REQUIRES 1–6 WEEKS FOR SAMPLE TURN–AROUND, SAMP– LING MUST BE PLANNED WELL IN ADVANCE OF FINAL GRADING. TESTING IS ALSO DONE BY COMMERCIAL LABORATORIES.

WHEN SOIL TEST ARE NOT AVAILABLE, FOLLOW RATES SUGGESTED ON THE INDIVIDUAL SPECIFICATION SHEET FOR THE SEEDING MIX CHOSEN (TABLES 6.11c THROUGH 6.11v). APPLICATION RATES USUALLY FALL INTO THE FOLLOWING RANGES:

GROUND AGRICULTURAL LIMESTONE:
LIGHT–TEXTURED, SANDY SOILS: 1–1 1/2 TONS/ACRE
HEAVY–TEXTURED, CLAYEY SOILS: 2–3 TONS/ACRE

FERTILIZER:
GRASSES: 800–1200 LB/ACRE OF 10–10–10 (OR THE EQUIVALENT)
GRASS–LEGUME MIXTURES: 800–1200 LB/ACRE OF 5–10–10 (OR THE EQUIVALENT)

APPLY LIME AND FERTILIZER EVENLY AND INCORPORATE INTO THE TOP 4–6 INCHES OF SOIL BY DISKING OR OTHER SUITABLE MEANS. OPERATE MACHINERY ON THE CONTOUR. WHEN USING A HYDROSEEDER, APPLY LIME AND FERTILIZER TO A ROUGH, LOOSE SURFACE.

ROUGHEN SURFACES ACCORDING TO PRACTICE 6.03, SURFACE ROUGHENING.

COMPLETE SEEDBED PREPARATION BY BREAKING UP LARGE CLODS AND RAKING INTO A SMOOTH, UNIFORM SURFACE (SLOPES LESS THAN 3:1). FILL IN OR LEVEL DEPRESSIONS THAT CAN COLLECT WATER. BROADCAST SEED INTO A FRESHLY LOOSENED SEEDBED THAT HAS NOT BEEN SEALED BY RAINFALL.

SEEDING NO. 5P FOR: GRASS LINED CHANNELS

SEEDING MIXTURE

SPECIES	RATE (LB/ACRE)
TALL FESCUE	200 (4–5 lb/ 1,000 FT)

SEEDING DATES
BEST: AUG. 25 – OCT. POSSIBLE: FEB. – APR. 15 AVOID SEEDING FROM NOV. TO JAN.
IF SEEDING MUST BE DONE AT THIS TIME, ADD 40 lb/acre RYE GRAIN AND USE A CHANNEL LINING THAT OFFERS MAXIMUM PROTECTION.

NURSE PLANTS
BETWEEN MAY 1 AND AUG. 15, ADD 10 LB/ACRE GERMAN MILLET OR 15 LB/ACRE SUDAN– GRASS. PRIOR TO MAY 1 OR AFTER AUG. 15 ADD 40 LB/ACRE RYE (GRAIN).

SOIL AMENDMENTS
APPLY LIME AND FERTILIZER ACCORDING TO SOIL TESTS, OR APPLY 4,000 LB/ACRE GROUND AGRICULTURAL LIMESTONE AND 1,000 LB/ACRE 10–10–10 FERTILIZER. OPERATE TILLAGE EQUIPMENT ACROSS THE WATERWAY.

USE JUTE, EXCELSIOR MATTING, OR OTHER EFFECTIVE CHANNEL LINING MATERIAL TO COVER THE BOTTOM OF CHANNELS AND DITCHES, AND STAPLE SECURELY. THE LINING SHOULD EXTEND ABOVE THE HIGHEST CALCULATED DEPTH OF FLOW. ON CHANNEL SIDE SLOPES ABOVE THIS HEIGHT, AND IN DRAINAGES NOT REQUIRING TEMPORARY LININGS, APPLY 4,000 lb/acre GRAIN STRAW AND ANCHOR STRAW BY STAPLING NETTING OVER THE TOP.

MULCH
MULCH AND ANCHORING MATERIALS MUST NOT BE ALLOWED TO WASH DOWN SLOPES WHERE THEY CAN CLOG DRAINAGE DEVICES.

MAINTENANCE
INSPECT AND REPAIR MULCH FREQUENTLY. REFERTILISE IN LATE WINTER OF THE FOLLOWING YEAR; USE SOIL TESTS OR APPLY 150 lb/acre 10–10–10. MOW REGULARLY TO A HEIGHT OF 2 – 4 INCHES.

REFER TO APPENDIX 8.02 FOR BOTANICAL NAMES.

BARNARD ENGINEERING, P.C.
1534 Saratoga Blvd., Indian Trail, NC 28079
(704) 421-3067
www.barnardengineringpc.com
N.C. License No. C-3679
S.C. COA 4599
GA.License No. PEF006337

NO.	DATE	BY	REVISION

CITY OF DURHAM TRANSFER STATION SITE PLAN SUBMITTAL
DURHAM, NC
WASTE INDUSTRIES
3301 BENSON DRIVE, SUITE 600
RALEIGH NC

PERMANENT SEEDING SPECIFICATIONS

DESIGNED	JDB	DRAWN	JDB	CHECKED	JDB
SCALE	AS SHOWN	DATE	10/31/13	PROJECT NO.	2013-6

NORTH CAROLINA PROFESSIONAL SEAL 19655 ENGINEER JOHN D. BARNARD

SHEET:
C-16

GENERAL NOTES

1. MORTAR JOINTS 1/2" +/_ 1/8" THICK.
2. USE CLASS "A" CONCRETE THROUGHOUT.
3. USE FORMS FOR CONSTRUCTION OF FLOOR SLAB.
4. DEDUCT FROM PIPE(S) FOR TOTAL CU. YDS. OF BRICK MASONRY.
5. USE #4 BAR DOWELS AT 12" O.C.
6. USE BRICK OR CONCRETE BLOCK WHICH COMPLIES WITH THE REQUIREMENTS OF NCDOT SECTION 840 OF THE STANDARD AND SPECIFICATIONS (LATEST REVISION).
7. STEPS SHALL BE INSTALLED IN ALL CATCH BASINS OVER 3'-6" IN DEPTH AT 12" O.C.. DEPTH SHALL BE MEASURED FROM THE TOP OF GUTTER TO INVERT. GALVANIZED REINFORCED STEEL SHALL NOT BE USED FOR STEPS. SEE NCDOT STANDARD DRAWING #840.66.
8. A CONCRETE BASE PAD PER NCDOT STANDARD DRAWING #840.00 SHALL BE ADDED FOR REINFORCED CONCRETE PIPES SET AT THE FLOOR SLAB.
9. FOR BASINS 8'-0" IN DEPTH OR LESS USE 8" THICK WALLS. IF DEPTH OF BASIN IS OVER 8'-0", WALL THICKNESS SHALL BE 12" FROM TOP TO 6'-0" IN DEPTH AND 8" FOR THE REMAINING DEPTH OF THE BASIN.
10. CONSTRUCT WITH PIPE CROWNS MATCHING.
11. CHAMFER ALL EXPOSED CORNERS 1".

DURHAM 1869 CITY OF MEDICINE | REVISION DATE: 12/07/09 | CATCH BASINS GENERAL NOTES | CITY OF DURHAM, NORTH CAROLINA DEPARTMENT OF PUBLIC WORKS | SCALE: NTS | DETAIL NO. SD-1.0

CASTING SPECIFICATIONS

1. GRAY IRON CONFORMING TO ASTM A48 CL35B.
2. DUCTILE IRON CONFORMING TO ASTM A536 GRADE 80-55-06.
3. CASTINGS TO BE MADE OF RECYCLED MATERIALS, 75% CONSUMER WASTE.
4. CASTINGS SHALL COME FROM A NCDOT APPROVED FOUNDRY.
5. CASTINGS SHALL BE UNIFORM QUALITY, FREE FROM SAND HOLES, GAS HOLES, SHRINKAGE, CRACKS, AND OTHER SURFACE DEFECTS. CASTINGS SHALL BE REASONABLY SMOOTH AND WELL CLEANED BY SHOT BLASTING. SURFACES OF THE CASTINGS SHALL BE FREE FROM BURNED ON SAND AND SHALL BE REASONABLY SMOOTH. RUNNERS, RISERS, FINS AND OTHER CAST-ON PIECES SHALL BE REMOVED FROM CASTINGS AND SUCH AREAS SHALL BE GROUND SMOOTH. BEARING SURFACES BETWEEN MANHOLE RINGS AND COVERS SHALL BE CAST OR MACHINED WITH SUCH PRECISION THAT UNIFORM BEARING SHALL BE PROVIDED THROUGHOUT THE PERIMETER AREA OF CONTACT. NOMINALLY, CASTINGS DIMENSIONAL TOLERANCES SHALL BE +/- 1/16" PER FOOT. ALL CASTING WEIGHTS ARE AVERAGE AND APPROXIAMTE VALUES MAY VARY +/- 5%.
6. TRAFFIC SERVICE CASTINGS SHALL MEET OR EXCEED THE LATEST STANDARDS OF AASHTO M306-XX. THE CASTING SHALL BE TESTED ON A SUITABLE AND CALIBRATED LOAD TESTING MACHINE AND THE CASTING SHALL HOLD A 40,000 POUND PROOF LOAD FOR ONE MINUTE WITHOUT EXPERIENCING ANY CRACKS OR DETRIMENTAL PERMANENT DEFORMATION. DUCTILE IRON CONFORMING TO ASTM A536 GRADE 80-55-06.
7. EACH CASTING SHALL BE IDENTIFIABLE AND SHOW, AT A MINIMUM, THE FOLLOWING: NAME OF THE PRODUCING FOUNDRY, COUNTRY OF MANUFACTURE, ASTM MATERIAL DESIGNATION, RECYCLE SYMBOL, INDIVIDUAL PART NUMBER AND CAST OR HEAT DATE. CASTINGS SHALL INCLUDE ALL LETTERING AS SHOWN ON THE SPECIFICATION DRAWINGS.

DURHAM 1869 CITY OF MEDICINE | REVISION DATE: 3/18/2010 | CATCH BASINS CASTING SPECIFICATIONS | CITY OF DURHAM, NORTH CAROLINA DEPARTMENT OF PUBLIC WORKS | SCALE: NTS | DETAIL NO. SD-1.1

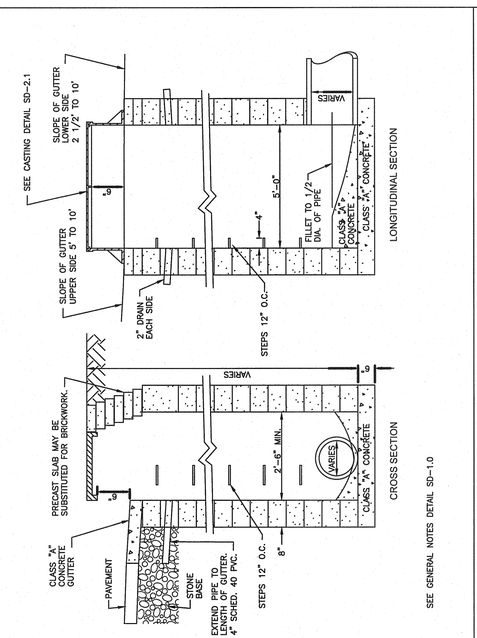

DURHAM 1869 CITY OF MEDICINE | REVISION DATE: 12/07/2009 | TYPE I CATCH BASIN WITH CURB INLET | CITY OF DURHAM, NORTH CAROLINA DEPARTMENT OF PUBLIC WORKS | SCALE: NTS | DETAIL NO. SD-2.0

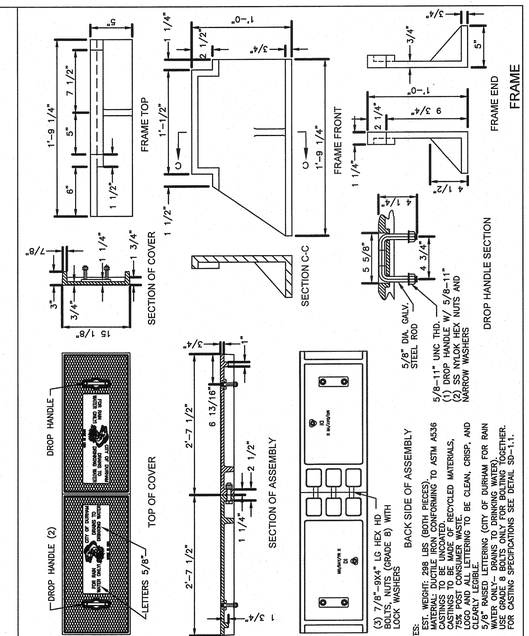

DURHAM 1869 CITY OF MEDICINE | REVISION DATE: 12/07/2009 | CASTING DETAIL FOR TYPE I CATCH BASIN | CITY OF DURHAM, NORTH CAROLINA DEPARTMENT OF PUBLIC WORKS | SCALE: NTS | DETAIL NO. SD-2.1

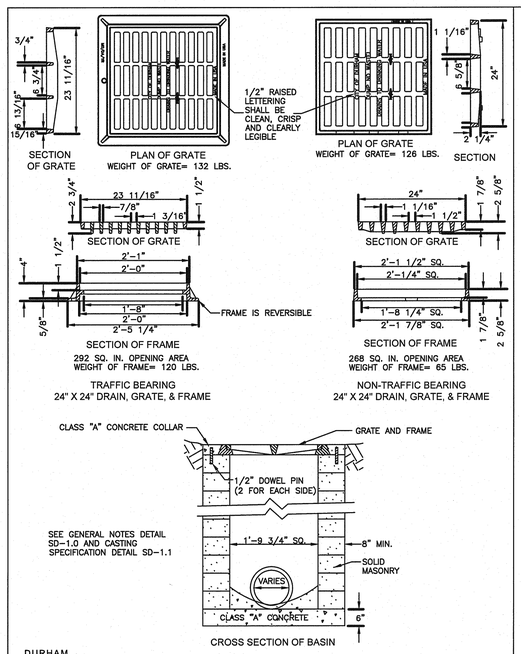

DURHAM 1869 CITY OF MEDICINE | REVISION DATE: 12/07/2009 | TYPE III CATCH BASIN WITH SURFACE INLET | CITY OF DURHAM, NORTH CAROLINA DEPARTMENT OF PUBLIC WORKS | SCALE: NTS | DETAIL NO. SD-4.0

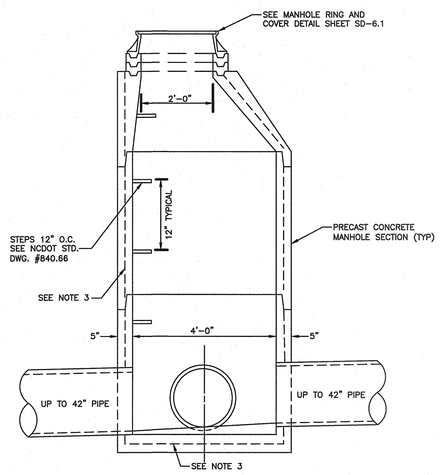

NOTES:

1. MINIMUM PIPE SIZE SHALL BE 15".
2. ALL PRECAST CONCRETE MANHOLES SHALL CONFORM TO THE LATEST REVISION OF ASTM C478.
3. CONCRETE SHALL BE 4000 PSI AT 28 DAYS, MINIMUM.
4. STEEL REINFORCEMENT SHALL BE GRADE 40 BILLET STEEL CONFORMING TO THE LATEST REVISION OF ASTM-A-185 FOR WALL REINFORCEMENT, AND THE LATEST REVISION ASTM-615 FOR THE BASE REINFORCEMENT.
5. DETAIL SUBJECT TO LATEST REVISION OF NCDOT ROADWAY STANDARD DRAWING #840.52.
6. STEPS SHALL BE INSTALLED IN ALL CATCH BASINS OVER 3'-6" IN DEPTH. DEPTH SHALL BE MEASURED FROM THE TOP OF GUTTER TO INVERT. PLAIN REINFORCED GAVINIZED STEEL SHALL NOT BE USED FOR STEPS.

DURHAM 1869 CITY OF MEDICINE | REVISION DATE: 12/07/2009 | PRECAST CONCRETE STORMWATER MANHOLE FOR 15" TO 42" PIPES | CITY OF DURHAM, NORTH CAROLINA DEPARTMENT OF PUBLIC WORKS | SCALE: NTS | DETAIL NO. SD-6.0

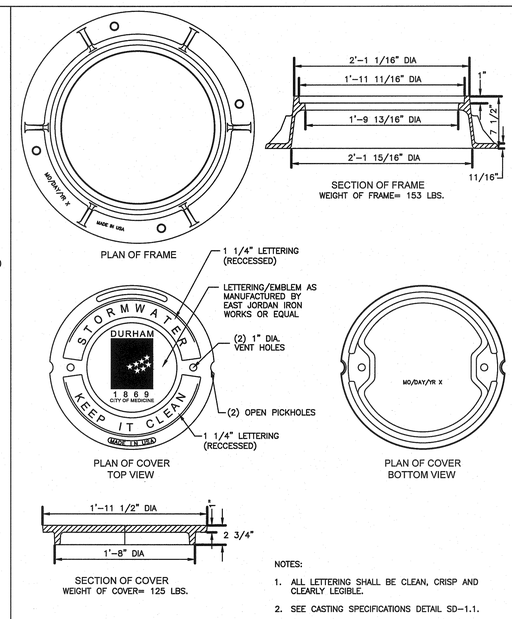

NOTES:

1. ALL LETTERING SHALL BE CLEAN, CRISP AND CLEARLY LEGIBLE.
2. SEE CASTING SPECIFICATIONS DETAIL SD-1.1.

DURHAM 1869 CITY OF MEDICINE | REVISION DATE: 12/07/2009 | STORMWATER MANHOLE RING AND COVER WITH 8" DEPTH | CITY OF DURHAM, NORTH CAROLINA DEPARTMENT OF PUBLIC WORKS | SCALE: NTS | DETAIL NO. SD-6.1

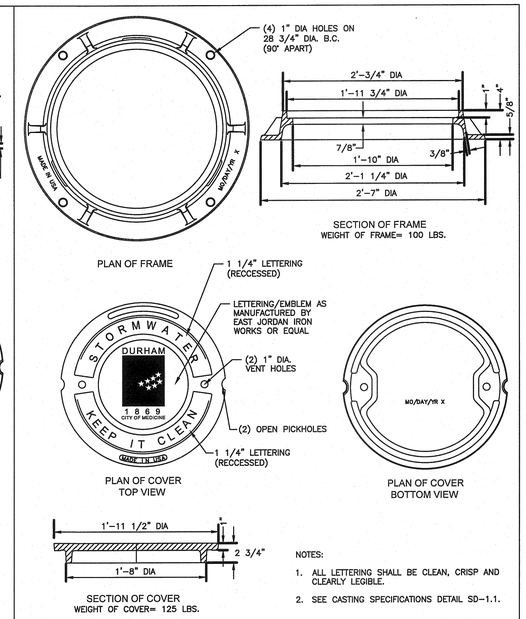

NOTES:

1. ALL LETTERING SHALL BE CLEAN, CRISP AND CLEARLY LEGIBLE.
2. SEE CASTING SPECIFICATIONS DETAIL SD-1.1.

DURHAM 1869 CITY OF MEDICINE | REVISION DATE: 12/07/2009 | STORMWATER MANHOLE RING AND COVER WITH 4" DEPTH | CITY OF DURHAM, NORTH CAROLINA DEPARTMENT OF PUBLIC WORKS | SCALE: NTS | DETAIL NO. SD-6.2

BARNARD ENGINEERING, P.C.
1534 Saratoga Blvd., Indian Trail, NC 28079
(704) 421-9067
www.barnardengineeringpc.com
N.C. License No. C-3679
S.C. COA 4599
GA. License No. PEF006337

NO.	DATE	BY	REVISION

CITY OF DURHAM TRANSFER STATION SITE PLAN SUBMITTAL
DURHAM, NC
WASTE INDUSTRIES
3301 BENSON DRIVE, SUITE 600
RALEIGH NC

STORM SYSTEM DETAILS

DESIGNED	DRAWN	CHECKED
JDB	JDB	JDB
SCALE	DATE	PROJECT NO.
AS SHOWN	10/31/13	2013-6

NORTH CAROLINA PROFESSIONAL SEAL 19665 ENGINEER JOHN D. BARNARD

SHEET: C-17

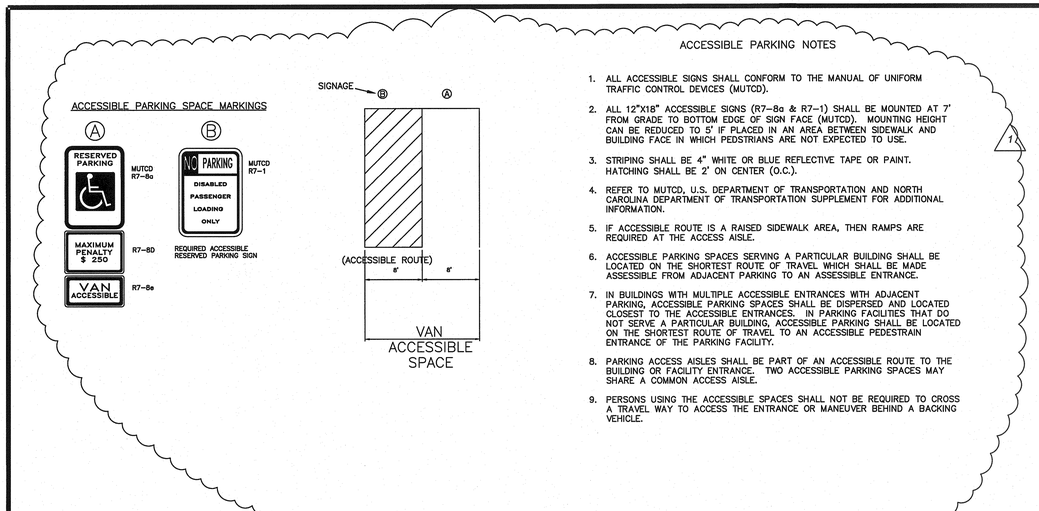

ACCESSIBLE PARKING NOTES

1. ALL ACCESSIBLE SIGNS SHALL CONFORM TO THE MANUAL OF UNIFORM TRAFFIC CONTROL DEVICES (MUTCD).
2. ALL 12"X18" ACCESSIBLE SIGNS (R7-8a & R7-1) SHALL BE MOUNTED AT 7' FROM GRADE TO BOTTOM EDGE OF SIGN FACE (MUTCD). MOUNTING HEIGHT CAN BE REDUCED TO 5' IF PLACED IN AN AREA BETWEEN SIDEWALK AND BUILDING FACE IN WHICH PEDSTRIANS ARE NOT EXPECTED TO USE.
3. STRIPING SHALL BE 4" WHITE OR BLUE REFLECTIVE TAPE OR PAINT. HATCHING SHALL BE 2' ON CENTER (O.C.).
4. REFER TO MUTCD, U.S. DEPARTMENT OF TRANSPORTATION AND NORTH CAROLINA DEPARTMENT OF TRANSPORTATION SUPPLEMENT FOR ADDITIONAL INFORMATION.
5. IF ACCESSIBLE ROUTE IS A RAISED SIDEWALK AREA, THEN RAMPS ARE REQUIRED AT THE ACCESS AISLE.
6. ACCESSIBLE PARKING SPACES SERVING A PARTICULAR BUILDING SHALL BE LOCATED ON THE SHORTEST ROUTE OF TRAVEL WHICH SHALL BE MADE ASSESSIBLE FROM ADJACENT PARKING TO AN ASSESSIBLE ENTRANCE.
7. IN BUILDINGS WITH MULTIPLE ACCESSIBLE ENTRANCES WITH ADJACENT PARKING, ACCESSIBLE PARKING SPACES SHALL BE DISPERSED AND LOCATED CLOSEST TO THE ACCESSIBLE ENTRANCES. IN PARKING FACILITIES THAT DO NOT SERVE A PARTICULAR BUILDING, ACCESSIBLE PARKING SHALL BE LOCATED ON THE SHORTEST ROUTE OF TRAVEL TO AN ACCESSIBLE PEDESTRAIN ENTRANCE OF THE PARKING FACILITY.
8. PARKING ACCESS AISLES SHALL BE PART OF AN ACCESSIBLE ROUTE TO THE BUILDING OR FACILITY ENTRANCE. TWO ACCESSIBLE PARKING SPACES MAY SHARE A COMMON ACCESS AISLE.
9. PERSONS USING THE ACCESSIBLE SPACES SHALL NOT BE REQUIRED TO CROSS A TRAVEL WAY TO ACCESS THE ENTRANCE OR MANEUVER BEHIND A BACKING VEHICLE.

ACCESSIBLE PARKING STANDARDS

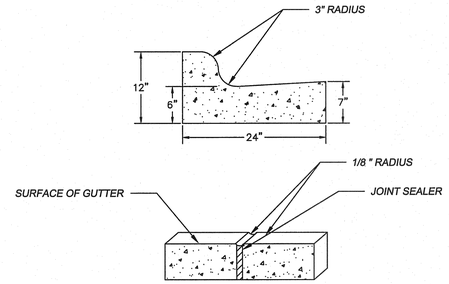

NOTES:
1. CONTRACTION JOINTS SHALL BE SPACED AT 10-FOOT INTERVALS. JOINT SPACING MAY BE ALTERED BY THE ENGINEER TO PREVENT UNCONTROLLED CRACKING
2. CONTRACTION JOINTS MAY BE INSTALLED BY THE USE OF TEMPLATES OR FORMED BY OTHER APPROVED METHODS. WHERE SUCH JOINTS ARE NOT FORMED BY TEMPLATES, A MINIMUM DEPTH OF 1¼" SHALL BE OBTAINED.
3. ALL EXPANSION JOINTS SHALL BE SPACED AT 90-FOOT INTERVALS AND ADJACENT TO ALL RIGID OBJECTS. JOINTS SHALL MATCH LOCATIONS WITH JOINTS IN ABUTTING SIDEWALK
4. CURB SHALL BE DEPRESSED AT INTERSECTIONS TO PROVIDE FOR FUTURE ACCESSIBLE RAMPS
5. TOP 6" OF SUBGRADE BENEATH THE CURB AND GUTTER SHALL BE COMPACTED TO 100% STANDARD PROCTOR MAXIMUM DRY DENSITY.

24" STANDARD CURB

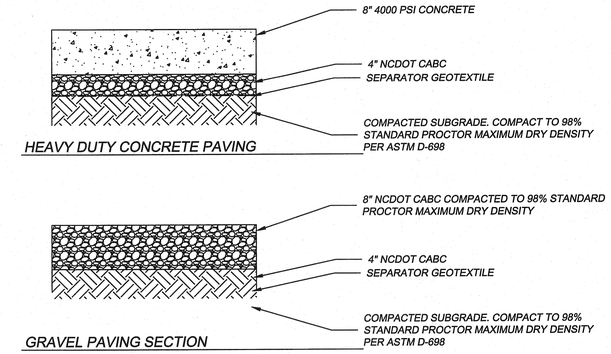

PAVING SECTIONS

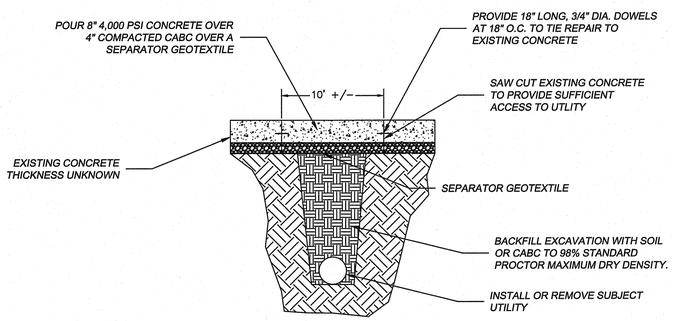

EXISTING CONCRETE PAVING REPAIR (nts)

NOTE: FLOWABLE FILL WILL BE ALLOWED AS BACKFILL FOR UTLIITY CUTS.

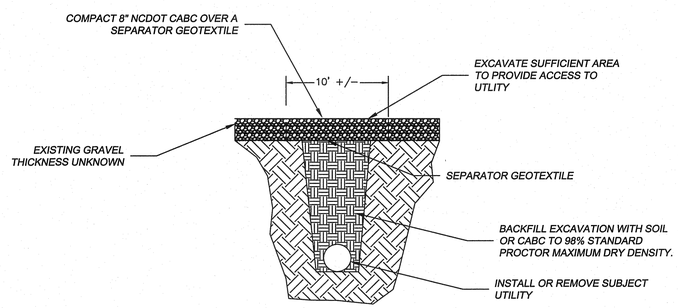

EXISTING GRAVEL PAVING REPAIR (nts)

NOTE: FLOWABLE FILL WILL BE ALLOWED AS BACKFILL FOR UTLIITY CUTS.

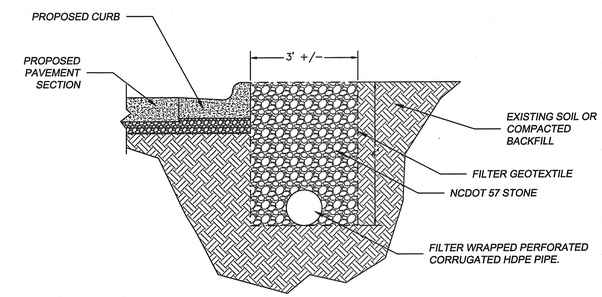

FRENCH DRAIN SECTION (nts)

NOTES:
1. DAYLIGHT DRAIN PIPE INTO DI-1. PROVIDE FITTINGS TO ALLOW FRENCH DRAIN TO DRAIN INTO DI-1.
2. GROUT PIPE INTO STRUCTURE.
3. FILTER GEOTEXTILE TO BE MIRAFI 1120 N OR EQUIVALENT

STATE OF NORTH CAROLINA DEPT. OF TRANSPORTATION DIVISION OF HIGHWAYS RALEIGH, N.C.

EK-12

ENGLISH STANDARD DRAWING FOR **PRECAST CONCRETE ENDWALL** FOR SINGLE 12" THRU 72" PIPE - 90° SKEW

SHEET 1 OF 1 — 838.80

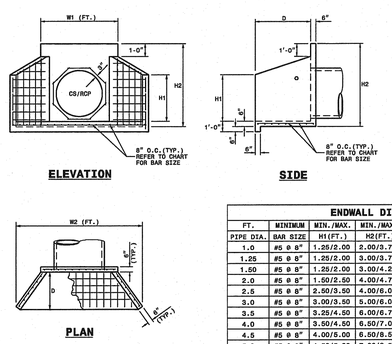

NOTES:

- THIS PRECAST ENDWALL MAY BE USED FOR THE FOLLOWING STANDARDS: 838.01, 838.11, 838.21, 838.27, 838.33, 838.39, 838.51, 838.57, 838.63 AND 838.69.
- INSTALL PRECAST ENDWALLS WITH WINGS AND PAY FOR IN ACCORDANCE WITH SPECIFICATION SECTION 838.
- USE 4000 PSI CONCRETE.
- PROVIDE ALL REINFORCING STEEL WHICH MEETS ASTM A615 FOR GRADE 60 AND WELDED WIRE FABRIC CONFORMING TO ASTM A185 WITH 2" MIN. CLEARANCE.
- PLACE LIFT HOLES OR PINS IN ACCORDANCE WITH OSHA STANDARD 1926.704.
- PIPE TO BE GROUTED INTO HEADWALL AT JOB SITE BY CONTRACTOR
- ALL ELEMENTS PRECAST TO MEET ASTM C913.
- WELDED WIRE FABRIC MAY BE SUBSTITUTED FOR REBAR AS LONG AS THE SAME AREA OF STEEL IS PROVIDED.
- CHAMFER ALL CORNERS 1" OR HAVE A RADIUS OF 1".

NOTE: THE MINIMUM BAR SIZE SHALL BE #5 BARS AT 8" CTS.THE CONTRACTOR WILL HAVE THE OPTION TO INCREASE THIS BAR SIZE AS NEEDED.

ENDWALL DIMENSIONS

FT.	MINIMUM	MIN./MAX.	MIN./MAX.	MIN./MAX.	MIN./MAX.
PIPE DIA.	BAR SIZE	H1(FT.)	H2(FT.)	D (FT.)	W1	W2
1.0	#5 @ 8"	1.25/2.00	2.00/3.75	1.25/1.75	3.00/3.75	5.50/6.00
1.25	#5 @ 8"	1.25/2.00	3.00/3.75	1.25/2.00	3.50/3.75	6.50/6.75
1.50	#5 @ 8"	1.25/2.00	3.00/4.25	1.50/2.50	3.50/3.75	6.50/6.75
2.0	#5 @ 8"	1.50/2.50	4.00/4.75	1.75/2.50	4.00/4.25	7.50/8.25
2.5	#5 @ 8"	2.50/3.50	4.00/6.00	2.00/3.00	4.50/5.50	10.00/11.50
3.0	#5 @ 8"	3.00/3.50	5.00/6.00	2.75/3.50	5.25/5.75	11.50/11.75
3.5	#5 @ 8"	3.25/4.50	6.00/6.75	3.25/3.50	6.00/6.75	12.00/13.25
4.0	#5 @ 8"	3.50/4.50	6.50/7.00	3.25/3.50	6.50/6.75	13.00/13.25
4.5	#5 @ 8"	4.00/5.00	6.50/8.50	3.25/4.00	7.00/9.25	13.50/15.75
5.0	#5 @ 8"	4.50/5.00	7.00/8.50	3.25/4.00	7.25/9.25	13.75/15.75
5.5	#5 @ 8"	4.50/5.00	7.50/8.50	3.25/4.00	7.25/9.25	14.00/15.75
6.0	#5 @ 8"	4.50/5.00	7.50/8.50	3.25/4.00	7.75/9.25	14.75/16.75

STATE OF NORTH CAROLINA DEPT. OF TRANSPORTATION DIVISION OF HIGHWAYS RALEIGH, N.C.

EK-12

ENGLISH STANDARD DRAWING FOR **CONCRETE SIDEWALK**

SHEET 1 OF 1 — 848.01

NOTES:

CONSTRUCT STANDARD SIDEWALK 5' WIDE AND 4" THICK UNLESS OTHERWISE DENOTED ON PLANS.

PLACE A GROOVE JOINT 1" DEEP WITH ⅛" RADII IN THE CONCRETE SIDEWALK AT 5' INTERVALS. ONE ½" EXPANSION JOINT WILL BE REQUIRED AT 50' INTERVALS. A ½" EXPANSION JOINT WILL BE REQUIRED WHERE THE SIDEWALK JOINS ANY RIGID STRUCTURE.

SEE STD. DWG. 848.05 FOR WHEELCHAIR RAMP LOCATION REQUIREMENTS AND CONSTRUCTION GUIDELINES.

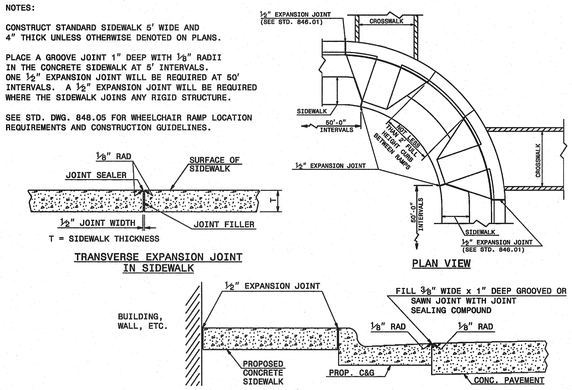

BARNARD ENGINEERING, P.C.
1534 Saratoga Blvd., Indian Trail, NC 28079
(704) 421-3467
www.barnardengineerings.com
N.C. License No. C-5079
S.C. COA: 6-99
GA. License No. PEF006337

NO.	DATE	BY	REVISION
1	3-10-14	JDB	CITY OF DURHAM FIRST SITE PLAN REVIEW

CITY OF DURHAM TRANSFER STATION SITE PLAN SUBMITTAL

DURHAM, NC

WASTE INDUSTRIES

3301 BENSON DRIVE, SUITE 600

RALEIGH NC

SITE DETAILS

DESIGNED	JDB	CHECKED	JDB
SCALE	AS SHOWN	DATE	10/31/13
		PROJECT NO.	2013-6

NORTH CAROLINA PROFESSIONAL SEAL 19665 ENGINEER JOHN D. BARNARD

SHEET:

C-18

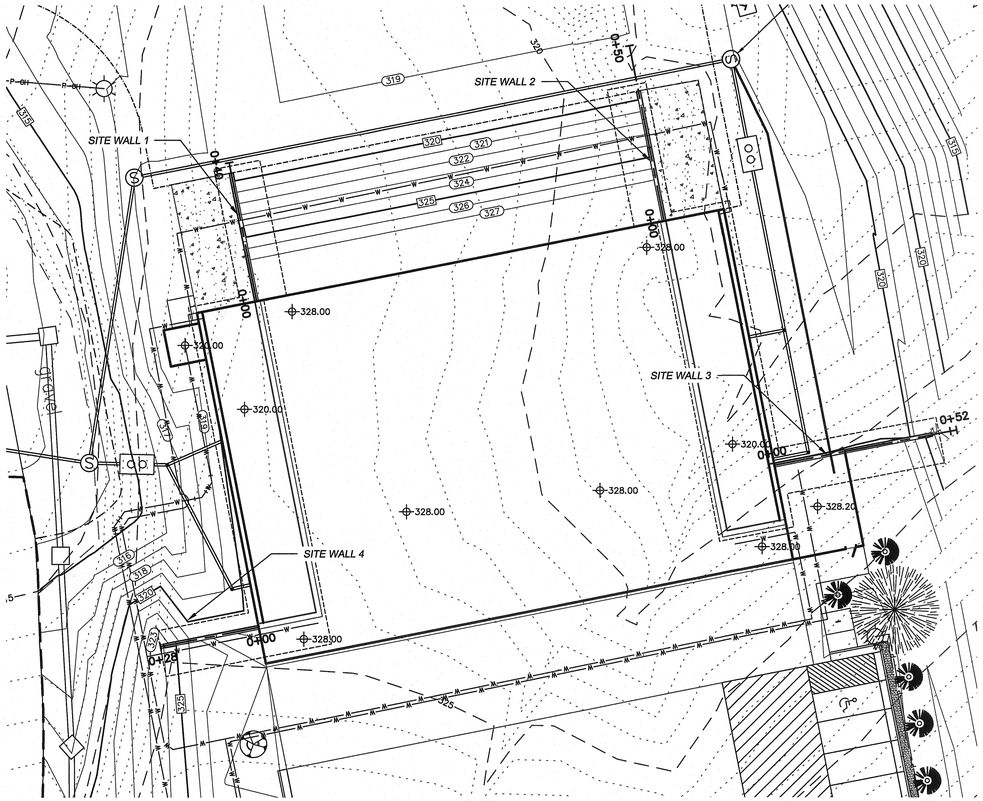

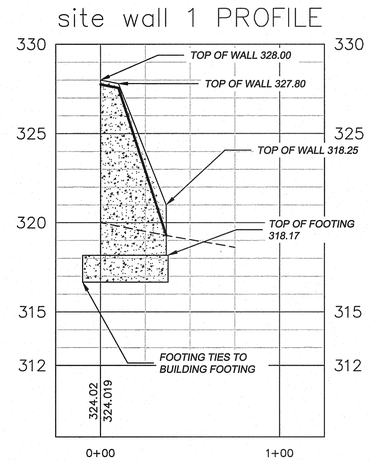

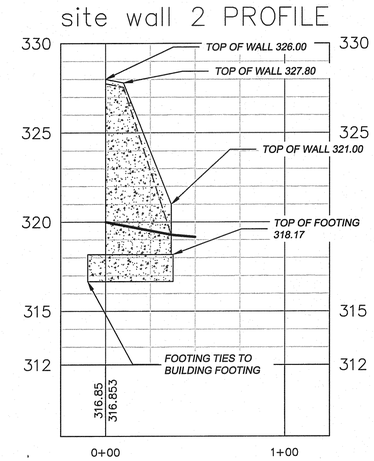

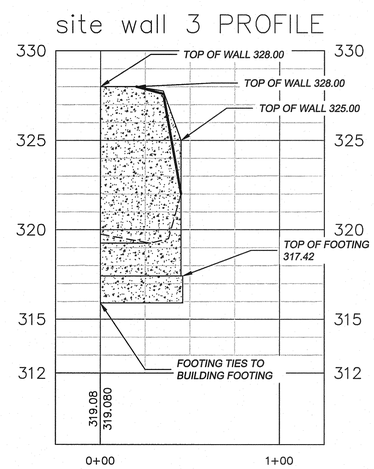

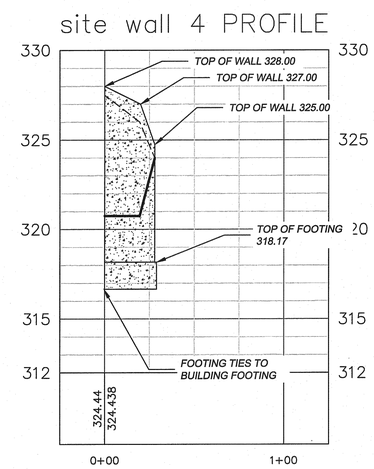

VERTICAL SCALE
(IN FEET)
1 inch = 4' ft.

BARNARD ENGINEERING, P.C.
1534 Saratoga Blvd., Indian Trail, NC 28079
(704) 425-9067
www.barnardengineerings.com
N.C. License No. C-5679
S.C. COA: 4599
GA. License No. PEF006337

NO.	DATE	BY	REVISION
1	3-10-14	JDB	CITY OF DURHAM FIRST SITE PLAN REVIEW & INTERNAL REVISIONS

CITY OF DURHAM TRANSFER STATION
DURHAM, NC

WASTE INDUSTRIES
3301 BENSON DRIVE, SUITE 600
RALEIGH NC

SITE RETAINING WALL PLAN AND PROFILE

DESIGNED	JDB	DRAWN	JDB	CHECKED	JDB
SCALE	AS SHOWN	DATE	10/31/13	PROJECT NO.:	2013-6

NORTH CAROLINA PROFESSIONAL ENGINEER SEAL 19665 JAMES D. BARNARD 3/6/14

SHEET:
C-19

1. MISCELLANEOUS

A. CURRENT EDITIONS OF THE NCDOT ROADWAY STANDARD DRAWINGS AND SPECIFICATIONS MANUAL SHALL BE CONSIDERED PART OF THESE PLANS.

B. THE CONTRACTOR SHALL BECOME FAMILIAR WITH THE PERMIT AND INSPECTION REQUIREMENTS SPECIFIED BY THE VARIOUS GOVERNMENTAL AGENCIES, THE ENGINEER, AND THE ARCHITECT. THE CONTRACTOR SHALL OBTAIN ALL NECESSARY PERMITS PRIOR TO CONSTRUCTION, AND SHALL SCHEDULE ANY NECESSARY INSPECTIONS ACCORDING TO AGENCY INSTRUCTIONS.

C. ALL SPECIFICATIONS AND DOCUMENTS REFERRED TO IN THESE PLANS SHALL BE OF THE LATEST REVISION.

D. ALL WORK PERFORMED SHALL COMPLY WITH THE REGULATIONS AND ORDINANCES OF THE VARIOUS GOVERNMENTAL AGENCIES HAVING JURISDICTION OVER THE WORK.

2. PROTECTION OF EXISTING UTILITIES

THE CONTRACTOR SHALL CONTACT THE APPROPRIATE AGENCY FOR THE EXACT FIELD LOCATIONS OF ALL WATER, SEWER, ELECTRIC, TELEPHONE, TELEVISION AND ANY OTHER UNDERGROUND AND OVERHEAD UTILITY BEFORE STARTING CONSTRUCTION.
THE OMISSION FROM OR THE INCLUSION OF UTILITY LOCATION ON THE CONTRACT DRAWINGS IS NOT TO BE CONSIDERED AS THE NON-EXISTANCE OF OR A DEFINITE LOCATION OF EXISTING UTILITIES. IT SHALL BE THE RESPONSIBILITY OF THE CONTRACTOR TO VERIFY THE LOCATION AND DEPTH OF ALL UNDERGROUND UTILITIES ALONG THE ROUTE OF WORK.

3. SAFETY

A. DURING THE CONSTRUCTION AND MAINTENANCE OF THIS PROJECT, ALL SAFETY REGULATIONS SHALL BE ENFORCED. THE CONTRACTOR OR HIS REPRESENTATIVE SHALL BE RESPONSIBLE FOR THE CONTROL AND SAFETY OF THE TRAVELING PUBLIC AND THE SAFETY OF HIS PERSONNEL.

B. THE CONTRACTOR'S MAINTENANCE OF TRAFFIC PLAN, IF REQUIRED, MUST BE SUBMITTED AND APPROVED BY THE CITY OF DURHAM, NC DOT AND BARNARD ENGINEERING PRIOR TO BEGINNING ANY CONSTRUCTION ACTIVITIES.

C. LABOR SAFETY REGULATIONS SHALL CONFORM TO THE PROVISIONS SET FORTH BY OSHA IN THE FEDERAL REGISTER OF THE DEPARTMENT OF TRANSPORTATION.

D. CONTRACTOR SHALL PROVIDE AND MAINTAIN HIS OWN SAFETY EQUIPMENT IN ACCORDANCE WITH HIS HEALTH & SAFETY PROGRAM AND ALL OTHER APPLICABLE LEGAL AND HEALTH AND SAFETY REQUIREMENTS. THE CONTRACTOR IS ALSO RESPONSIBLE FOR PROVIDING ITS EMPLOYEES AND SUB CONTRACTORS WITH ADEQUATE INFORMATION AND TRAINING TO ENSURE THAT ALL EMPLOYEES AND SUB CONTRACTORS AND SUB CONTRACTOR'S EMPLOYEES COMPLY WITH ALL APPLICABLE REQUIREMENTS. CONTRACTOR SHALL REMAIN IN COMPLIANCE WITH ALL OCCUPATION SAFETY AND HEALTH REGULATIONS AS WELL AS THE ENVIRONMENTAL PROTECTION LAWS. THE FOLLOWING IS NOT TO BE PERCEIVED AS THE ENTIRE SAFETY PROGRAM BUT JUST BASIC REQUIREMENTS.

E. ALL EXCAVATIONS BY THE CONTRACTOR SHALL CONFORM TO THE REQUIREMENTS OF THE DEPARTMENT OF LABOR'S OCCUPATIONAL SAFETY AND HEALTH ADMINISTRATION RULES AND REGULATIONS. PARTICULAR ATTENTION MUST BE PAID TO THE CONSTRUCTION STANDARDS FOR EXCAVATIONS, 29 CFR PART 1926, SUBPART P.

F. THE MINIMUM STANDARDS AS SET FORTH IN THE CURRENT EDITION OF "MANUAL ON UNIFORM TRAFFIC CONTROL DEVICES" (U.S. DOT) SHALL BE FOLLOWED IN THE DESIGN APPLICATION, INSTALLATION, MAINTENANCE AND REMOVAL OF ALL TRAFFIC CONTROL DEVICES, WARNING DEVICES AND BARRIERS NECESSARY TO PROTECT THE PUBLIC AND WORKMEN FROM HAZARDS WITHIN THE PROJECT LIMITS.

G. ALL TRAFFIC CONTROL MARKINGS AND DEVICES SHALL CONFORM TO THE PROVISIONS SET FORTH IN THE MANUAL ON UNIFORM TRAFFIC CONTROL DEVICES PREPARED BY THE U.S. DEPARTMENT OF TRANSPORTATION FEDERAL HIGHWAY ADMINISTRATION.

H. IT SHALL BE THE SOLE RESPONSIBILITY OF THE CONTRACTOR TO COMPLY AND ENFORCE ALL APPLICABLE SAFETY REGULATIONS. THE ABOVE INFORMATION HAS BEEN PROVIDED FOR THE CONTRACTOR'S INFORMATION ONLY AND DOES NOT IMPLY THAT THE OWNER OR ENGINEER WILL INSPECT AND/OR ENFORCE SAFETY REGULATIONS.

I. THE CONTRACTOR SHALL EXERCISE EXTREME CAUTION IN AREAS OF BURIED UTILITIES AND SHALL PROVIDE AT LEAST 48 HOURS NOTICE TO THE UTILITY COMPANIES PRIOR TO CONSTRUCTION TO OBTAIN FIELD LOCATIONS OF EXISTING UNDERGROUND UTILITIES.

J. THE CONTRACTOR IS RESPONSIBLE FOR REPAIRING ANY DAMAGE TO EXISTING FACILITIES, ABOVE OR BELOW GROUND, THAT MAY OCCUR AS A RESULT OF THE WORK PERFORMED BY THE CONTRACTOR CALLED FOR IN THIS CONTRACT.

K. ALL UNDERGROUND UTILITIES MUST BE IN PLACE AND TESTED OR INSPECTED PRIOR TO BASE AND PAVEMENT CONSTRUCTION.

IV. SITE PLAN AND COORDINATE GEOMETRY

A. DESIGN DATA PREPARED BY BARNARD ENGINEERING AND LAWRENCE ASSOCIATES SURVEYING.

B. ALL POINTS AND MONUMENTS SHALL BE SURVEYED UPON MOBILIZATION TO VERIFY THEIR ACCURACY. ANY DISCREPENCIES DISCOVERED MUST BE BROUGHT TO THE ATTENTION OF THE ENGINEER IN WRITING.

C. MONUMENTS AND OTHER SURVEY CONTROL POINTS SHALL BE PROTECTED FROM DAMAGE AND DISTURBANCE. IF ANY CONTROL POINTS ARE DAMAGED OR DISTURBED, IT SHALL BE THE RESPONSIBILITY OF THE CONTRACTOR TO NOTIFY THE ENGINEER AND REPLACE THE CONTROL POINTS TO THEIR ORIGINAL CONDITION AT HIS OWN EXPENSE.

D. ALL ELEVATIONS REFER TO THE NATIONAL GEODETIC VERTICAL DATUM.

E. LOCATIONS, ELEVATIONS, AND DIMENSIONS OF EXISTING UTILITIES, STRUCTURES AND OTHER FEATURES ARE SHOWN ACCORDING TO THE BEST INFORMATION AVAILABLE AT THE TIME OF PREPARATION OF THESE PLANS. THE CONTRACTOR SHALL VERIFY THE LOCATIONS, ELEVATIONS AND DIMENSIONS OF ALL EXISTING UTILITIES, STRUCTURES AND OTHER FEATURES AFFECTING THIS WORK PRIOR TO CONSTRUCTION.

F. UPON COMPLETION OF CONSTRUCTION, THE CONTRACTOR SHALL FURNISH OWNER'S ENGINEER WITH COMPLETE "AS-BUILT" INFORMATION CERTIFIED BY A REGISTERED LAND SURVEYOR. THIS "AS-BUILT INFORMATION SHALL BE PRODUCED ON AUTOCAD 2010, OR LATER, AND UPON COMPLETION, THE CONTRACTOR SHALL FURNISH BARNARD ENGINEERING WITH DISKS OF ALL DRAWINGS, ONE SET OF REPRODUCIBLE MYLARS, AND TWO SETS OF BLUEPRINTS. THE "AS-BUILT" INFORMATION SHALL CLEARLY AND ACCURATELY REPRESENT ALL CONSTRUCTED ITEMS INCLUDING, BUT NOT LIMITED TO:

1. ELEVATIONS OF ALL STORM SEWER AND SANITARY SEWER STRUCTURE BOTTOMS, TOPS, AND INVERTS.

2. FIELD MEASURED LENGTHS OF PIPES FOR ALL INSTALLED UTILITIES, CONDUITS, SLEEVES, ETC.

3. LOCATIONS OF ALL STRUCTURES, PIPES, CONDUITS, SLEEVES, ETC.

4. CALCULATED SLOPE OF ALL SANITARY SEWER AND STORM SEWER LINES.

5. HORIZONTAL AND VERTICAL CONTROL OF ALL WATER MAIN FITTINGS AND APPURTENANCES, AND HORIZONTAL AND VERTICAL CONTROL ON THE TOP OF WATER MAINS AT ALL CROSSINGS, AND A MINIMUM OF EVERY 200 LINEAR FEET OF PIPE.

6. HORIZONTAL AND VERTICAL CONTROL OF ALL TOP OF BANKS, TOE OF SLOPES, ALL GRADE BREAKS, BUILDINGS, PONDS, ETC.

G. ALL DIMENSIONS SHOWN ON PLAN ARE TO FACE OF BUILDING, EDGE OF PAVEMENT, CENTERLINE OF STRUCTURE, OR END OF PIPE UNLESS NOTED OTHERWISE.

V. CLEARING/DEMOLITION

A. THE CONTRACTOR SHALL CLEAR AND GRUB ONLY THOSE PORTIONS OF THE SITE NECESSARY FOR CONSTRUCTION. DISTURBED AREAS WILL BE SEEDED, MULCHED, SODDED OR PLANTED WITH OTHER APPROVED LANDSCAPE MATERIAL IMMEDIATELY FOLLOWING CONSTRUCTION.

B. THE TOP 6" OF GROUND REMOVED DURING CLEARING AND GRUBBING SHALL BE STOCKPILED AT A SITE DESIGNATED BY THE OWNER OR THE OWNER'S ENGINEER TO BE USED FOR LANDSCAPING PURPOSES, UNLESS OTHERWISE DIRECTED BY THE OWNER OR THE OWNER'S ENGINEER. REMAINING EARTHWORK THAT RESULTS FROM CLEARING AND GRUBBING OR SITE EXCAVATION IS TO BE UTILIZED ON-SITE IF REQUIRED, PROVIDED THAT THE MATERIAL IS DEEMED SUITABLE FOR CONSTRUCTION BY THE OWNER'S SOILS TESTING COMPANY. EXCESS MATERIAL IS TO BE EITHER STOCKPILED ON THE SITE AS DIRECTED BY THE OWNER OR OWNER'S ENGINEER, OR REMOVED FROM THE SITE. THE CONTRACTOR IS RESPONSIBLE FOR ACQUIRING ANY PERMITS THAT ARE NECESSARY FOR REMOVING EXCESS EARTHWORK FROM THE SITE.

C. ALL CONSTRUCTION DEBRIS AND OTHER WASTE MATERIALS SHALL BE DISPOSED OF OFF-SITE IN ACCORDANCE WITH APPLICABLE REGULATORY AGENCY REQUIREMENTS OR AS DIRECTED BY THE OWNER OR THE OWNER'S ENGINEER.

VI. PAVING AND GRADING

A. ALL DELETERIOUS SUBSURFACE MATERIAL (I.E. MUCK, PEAT, BURIED DEBRIS) IS TO BE EXCAVATED IN ACCORDANCE WITH THESE PLANS OR AS DIRECTED BY THE OWNER, THE OWNER'S ENGINEER, OR OWNER'S SOIL TESTING COMPANY. DELETERIOUS MATERIAL IS TO BE STOCKPILED OR REMOVED FROM THE SITE AS DIRECTED BY THE OWNER OR THE OWNER'S ENGINEER. EXCAVATED AREAS TO BE BACKFILLED WITH APPROVED MATERIALS AND COMPACTED AS SHOWN ON THESE PLANS. CONTRACTOR IS RESPONSIBLE FOR ACQUIRING ANY PERMITS THAT ARE NECESSARY FOR REMOVING DELETERIOUS MATERIAL FROM THE SITE.

B. THE CONTRACTOR SHALL BE RESPONSIBLE FOR PROTECTING EXCAVATIONS AGAINST COLLAPSE AND WILL PROVIDE BRACING, SHEETING OR SHORING AS NECESSARY. DEWATERING METHODS SHALL BE USED AS REQUIRED TO KEEP TRENCHES DRY WHILE PIPE AND APPURTENANCES ARE BEING PLACED.

C. ALL NECESSARY FILL AND EMBANKMENT THAT IS PLACED DURING CONSTRUCTION SHALL CONSIST OF MATERIAL SPECIFIED BY THE OWNER'S SOIL TESTING COMPANY OR ENGINEER AND BE PLACED AND COMPACTED ACCORDING TO THESE PLANS OR THE REFERENCED SOILS REPORT.

E. PROPOSED SPOT ELEVATIONS REPRESENT FINISHED PAVEMENT OR GROUND SURFACE GRADE UNLESS OTHERWISE NOTED ON DRAWINGS.

F. CONTRACTOR SHALL PROVIDE EROSION CONTROL AND SEDIMENTATION BARRIER (HAY BALES OR SILTATION CURTAIN) TO PREVENT SILTATION OF ADJACENT PROPERTY, STREETS, STORM SEWERS AND WATERWAYS.

G. IF WIND EROSION BECOMES SIGNIFICANT DURING CONSTRUCTION, THE CONTRACTOR SHALL STABILIZE THE AFFECTED AREA USING SPRINKLING, IRRIGATION OR OTHER ACCEPTABLE METHODS.

H. THE CONTRACTOR WILL STABILIZE BY SEED AND MULCH, SOD OR OTHER APPROVED MATERIALS AS REQUIRED BY ANY DISTURBED AREAS IN ACCORDANCE WITH THE APPROVED EROSION CONTROL PLANS FOLLOWING CONSTRUCTION OF THE UTILITY SYSTEMS AND PAVEMENT AREAS. CONTRACTOR SHALL MAINTAIN SUCH AREAS UNTIL FINAL ACCEPTANCE BY OWNER.

I. ENGINEERED FILL MATERIAL SHALL NOT CONTAIN ROCKS OR HARD LUMPS GREATER THAN 3 INCHES IN MAXIMUM DIMENSIONS AND SHALL BE FREE OF VEGETATION, ORGANIC MATTER, DEBRIS, RUBBLE, AND OTHER UNSUITABLE MATERIALS.

J. IMPORTED SOILS FOR USE AS ENGINEERED FILL AND SHALL NOT CONTAIN ROCKS OR HARD LUMPS GREATER THAN 3 INCHES IN MAXIMUM DIMENSIONS AND SHALL BE FREE OF VEGETATION, ORGANIC MATTER, DEBRIS, RUBBLE, AND OTHER UNSUITABLE MATERIALS. O. AGGREGATE BASE MATERIAL SHALL MEET THE FOLLOWING GRADATION REQUIREMENTS.

K. AGGREGATE BASE MATERIAL SHALL MEET THE FOLLOWING GRADATION REQUIREMENTS.

SIEVE SIZE (PER ASTM D422)	PERCENT PASSING BY WEIGHT
1 INCH	100
3/4	90-100
NO. 8	35-55
NO. 200	0-8

L. ALL AREAS TO RECEIVE FILL, AND AREAS OF STRUCTURES AND PAVEMENTS, SHALL BE STRIPPED OF VEGETATION, ORGANIC MATTER, DEBRIS, RUBBLE, AND OTHER UNSUITABLE MATERIALS. STRIPPED SOILS SHALL NOT BE USED IN ENGINEERED FILL, BUT MAY BE USED IN LANDSCAPE AREAS.

M. ENGINEERED FILL MATERIAL SHALL BE COMPACTED TO AT LEAST THE FOLLOWING PERCENTAGES OF MAXIMUM DRY DENSITY AND OPTIMUM MOISTURE CONTENT, PER ASTM 698 (STD. PROCTOR):

ENGINEERED FILL MATERIAL	PERCENT COMPACTION	MOISTURE CONTENT (RANGE)
NATIVE SOIL	95%	+/- 3% OF OPTIMUM
ENGINEERED FILL UNDER STRUCTURES & BEHIND RETAINING WALLS	95%	+/- 3% OF OPTIMUM
ENGINEERED FILL UNDER PAVEMENTS	98%	+/- 3% OF OPTIMUM
FILL IN LANDSCAPE AREAS	95%	+/- 5% OF OPTIMUM
AGGREGATE BASE MATERIAL OR IMPORTED GRANULAR SOIL IN BUILDING AND PAVEMENT AREAS	100%	OPTIMUM PLUS OR MINUS 2%

NOTE: MOISTURE CONTENT OF ENGINEERED FILL MATERIAL MAY REQUIRE ADJUSTMENT DURING CONSTRUCTION TO PREVENT SOIL PUMPING. SOIL WITH MOISTURE CONTENT WHICH DOES NOT MEET THE SPECIFICATION IS NOT CONSIDERED UNSUITABLE, BUT SHALL BE MODIFIED TO MEET THE SPECIFICATIONS.

N. ENGINEERED FILL SHALL BE PLACED IN LIFTS NO GREATER THAN 8 INCHES THICK (LOOSE).

O. THE TOP 8 INCHES OF SOIL EXPOSED AT THE BOTTOM OF EXCAVATIONS SHALL BE COMPACTED, SCARIFIED AND COMPACTED AS ENGINEERED FILL PRIOR TO PLACEMENT OF ADDITIONAL FILL. IF SOFT OR LOOSE SOIL IS PRESENT AT THE BASE OF EXCAVATIONS, IT SHALL BE EXCAVATED AND/OR COMPACTED AS ENGINEERED FILL OR AS RECOMMENDED BY THE ENGINEER'S FIELD REPRESENTATIVE.

P. IF SUBGRADE SOILS EXHIBIT PUMPING DURING COMPACTION, THE AREA SHALL BE ALLOWED UNTIL THE SOILS BECOME WORKABLE WITHOUT PUMPING. THE CONTRACTOR SHALL USE STANDARD CONSTRUCTION METHODS TO DRY THE SOILS. THE MOISTURE CONTENT OF THE SOILS SHALL BE ADJUSTED TO PREVENT PUMPING.

Q. EXPOSURE TO THE ENVIRONMENT MAY REDUCE THE STRENGTH OF SOILS IN FOOTING,FLOOR SLAB, AND PAVED AREAS. IF THIS OCCURS, THE SOFTENED SOILS SHALL BE REMOVED AND REWORKED IMMEDIATELY PRIOR TO CONCRETE PLACEMENT. IF RAINFALL IS EXPECTED AT A TIME WHEN BEARING SOILS IN FOOTING AREAS ARE EXPOSED, A 2 TO 4 INCH THICK LAYER OF LEAN CONCRETE MAY BE PLACED IN SUCH AREAS.

R. THE SITE SHALL BE GRADED TO TRANSPORT SURFACE RUNOFF AWAY FROM THE STRUCTURES AND PAVED AREAS. WATER SHALL NOT BE ALLOWED TO ACCUMULATE (POND) AROUND THE BUILDING PERIMETER OR ON PAVED AREAS.

GENERAL ROCK EXCAVATION:

ROCK SHALL BE DEFINED AS ANY MATERIAL WHICH CANNOT BE EXCAVATED WITH A SINGLE- TOOTH RIPPER DRAWN BY A CRAWLER TRACTOR HAVING A MINIMUM DRAW BAR PULL RATED AT NOT LESS THAN 56,000 POUNDS (CATERPILLAR D 8K OR EQUIVALENT).

THE VOLUME OF ROCK EXCAVATION SHALL BE DETERMINED BY A LICENSED SURVEYOR BY THE AVERAGE END AREA METHOD. THE CONTRACTOR SHALL SUBMIT TO THE ENGINEER A SCALED PLAN WITH SUFFICIENT ELEVATION POINTS TO ACCURATELY DEFINE THE VOLUME OF ROCK EXCAVATED.

THE DEPTH OF ROCK SHALL BE DEFINED AS FROM TOP OF ROCK TO THE CONTRACT SPECIFIED ELEVATION FOR EXCAVATION.

CONTRACTOR SHALL BE COMPENSATED FOR ROCK EXCAVATION AS DEFINED HEREIN IN ACCORDANCE WITH CONTRACT UNIT PRICES.

TRENCH ROCK EXCAVATION:

TRENCH ROCK SHALL BE DEFINED AS ANY MATERIAL WHICH CANNOT BE EXCAVATED WITH A BACKHOE HAVING A BUCKET CURLING FORCE RATE AT NOT LESS THAN 24,700 POUNDS (CATERPILLAR MODEL 225 OR EQUIVALENT).

BASIS OF PAYMENT FOR TRENCH ROCK EXCAVATION:

PIPE TRENCH: THAT VOLUME DEFINED BY THE PIPE DIAMETER PLUS 18" AND THE DEPTH
FROM TOP OF ROCK TO BOTTOM OF PIPE PLUS 6" MULTIPLIED BY THE ACTUAL LENGTH. WALL FOOTING, PIT: THAT VOLUME DEFINED BY THE WIDTH OF FOOTING PLUS 12" AND THE DEPTH FROM TOP OF ROCK TO BOTTOM OF FOOTING MULTIPLIED BY THE ACTUAL LENGTH OF WALL.

COLUMN FOOTING: THE AREA OF THE COLUMN FOOTING MULTIPLIED BY THE DEPTH FROM TOP OF ROCK TO BOTTOM OF FOOTING.

CONTRACTOR SHALL BE COMPENSATED FOR ROCK EXCAVATION AS DEFINED HEREIN IN ACCORDANCE WITH CONTRACT UNIT PRICES.

S. BACKFILL AND FILL SHALL CONFORM TO THE GENERAL REQUIREMENTS FOR SOIL MATERIALS ABOVE AND SHALL BE CLASSIFIED AS GW, GP, GM, GC, SW, SP, SM, SC, ML, CL BY ASTM D2487 AND SHALL CONFORM TO THE FOLLOWING:

1. SHALL BE CAPABLE OF BEING COMPACTED TO THE SPECIFIED DEGREE OF COMPACTION WHEN THE MOISTURE CONTENT IS WITHIN 3 PERCENTAGE POINTS OF THE OPTIMUM PERCENT MOISTURE.
2. LIQUID LIMIT SHOULD NOT EXCEED 40 PERCENT WHEN TESTED IN ACCORDANCE WITH ASTM D4318.
3. PLASTICITY INDEX SHOULD NOT BE GREATER THAN 30 PERCENT WHEN TESTED IN ACCORDANCE WITH ASTM D4318.
4. NO MORE THAN 75 PERCENT BY WEIGHT SHALL BE FINER THAN NO. 200 SIEVE WHEN TESTED IN ACCORDANCE WITH ASTM D1140.

T. UNSUITABLE SOIL: SHALL BE ANY SOIL MATERIALS DETERMINED BY THE INDEPENDENT GEOTECHNICAL LABORATORY AS NOT CONFORMING TO THE REQUIREMENTS DESCRIBED ABOVE FOR BACKFILL AND FILL. A MOISTURE CONTENT WHICH IS MORE THAN 3 PERCENTAGE POINTS FROM OPTIMUM SHALL NOT BE CONSIDERED UNSUITABLE IF SUCH MATERIALS WOULD OTHERWISE BE SUITABLE IF THE MOISTURE CONTENT WERE ADJUSTED. ADJUSTMENTS TO THE SOIL MOISTURE CONTENT BY DRYING, MIXING, ADDING WATER, OR OTHER MEANS SHALL BE THE RESPONSIBILITY OF THE CONTRACTOR. V. MEASUREMENT OF UNSUITABLE MATERIAL: THE VOLUME OF UNSUITABLE MATERIAL EXCAVATION SHALL BE DETERMINED BY A LICENSED SURVEYOR BY THE AVERAGE END AREA METHOD. THE CONTRACTOR SHALL SUBMIT TO THE ARCHITECT A SCALED PLAN WITH SUFFICIENT ELEVATION POINTS TO ACCURATELY DEFINE THE VOLUME OF UNSUITABLE MATERIAL EXCAVATED. THE EXTENT OF UNSUITABLE MATERIAL EXCAVATION SHALL BE DETERMINED BY THE INDEPENDENT GEOTECHNICAL LABORATORY.

VII. DRAINAGE

A. ALL STORM SEWER PIPE SHALL BE O RING REINFORCED CONCRETE PIPE CLASS III UNLESS OTHERWISE NOTED ON PLANS. ALL DRAINAGE STRUCTURES SHALL BE IN ACCORDANCE WITH NCDOT STANDARDS UNLESS OTHERWISE NOTED ON PLANS.

B. PIPE LENGTHS SHOWN ARE APPROXIMATE AND TO CENTER OF DRAINAGE STRUCTURE OR TO THE END OF THE PIPE. CONTRACTOR SHALL VERIFY ALL QUANTITIES PRIOR TO SUBMITTAL OF BID.

C. ALL DRAINAGE STRUCTURE GRATES AND COVERS SHALL BE AS PER NCDOT STANDARDS UNLESS OTHERWISE NOTED.

D. ALL STORM DRAINAGE PIPING SHALL BE SUBJECT TO A VISUAL INSPECTION BY THE OWNER'S ENGINEER PRIOR TO THE PLACEMENT OF BACKFILL. CONTRACTOR TO NOTIFY THE ENGINEER 48 HOURS IN ADVANCE TO SCHEDULE INSPECTIONS.

E. THE CONTRACTOR SHALL MAINTAIN AND PROTECT FROM MUD, DIRT, DEBRIS, ETC. THE STORM DRAINAGE SYSTEM UNTIL FINAL ACCEPTANCE OF THE PROJECT. THE CONTRACTOR MAY BE REQUIRED TO RECLEAN PIPES AND INLETS FOR THESE PURPOSES.

VIII. EROSION/TURBIDITY CONTROL

A. THE INSTALLATION OF TEMPORARY EROSION CONTROL BARRIERS SHALL BE COORDINATED WITH THE CONSTRUCTION OF THE PERMANENT EROSION CONTROL FEATURES TO THE EXTENT NECESSARY TO ASSURE ECONOMICAL, EFFECTIVE AND CONTINUOUS CONTROL OF EROSION AND WATER POLLUTION THROUGHOUT THE LIFE OF THE CONSTRUCTION PHASE.

B. THE TYPE OF EROSION CONTROL BARRIERS USED SHALL BE GOVERNED BY THE NATURE OF THE CONSTRUCTION OPERATION AND SOIL TYPE THAT WILL BE EXPOSED. SILTY AND CLAYEY MATERIAL USUALLY REQUIRE SOLID SEDIMENT BARRIERS TO PREVENT TURBID WATER DISCHARGE, WHILE SANDY MATERIAL MAY NEED ONLY SILT SCREENS OR HAY BALES TO PREVENT EROSION. FLOATING TURBIDITY CURTAINS SHALL BE USED IN OPEN WATER SITUATIONS. DIVERSION DITCHES OR SWALES MAY BE REQUIRED TO PREVENT TURBID STORM WATER RUNOFF FROM BEING DISCHARGED TO WETLANDS OR OTHER WATER BODIES. IT MAY BE NECESSARY TO EMPLOY A COMBINATION OF BARRIERS, DITCHES AND OTHER EROSION/TURBIDITY CONTROL MEASURES IF CONDITIONS WARRANT.

C. CONSTRUCTION OPERATIONS IN OR ADJACENT TO WETLANDS SHALL BE RESTRICTED TO THOSE AREAS IDENTIFIED IN THE PLANS AND IN THE SPECIFICATIONS.

D. EXCEPT AS NECESSARY FOR CONSTRUCTION, EXCAVATED MATERIAL SHALL NOT BE DEPOSITED IN THE WETLANDS OR IN A POSITION CLOSE ENOUGH THERETO TO BE WASHED AWAY BY HIGH WATER OR RUNOFF.

E. THE CONTRACTOR SHALL SCHEDULE HIS OPERATIONS SUCH THAT THE AREA OF UNPROTECTED ERODIBLE EARTH EXPOSED AT ANY ONE TIME IS NOT LARGER THAN THE MINIMUM AREA NECESSARY FOR EFFICIENT CONSTRUCTION OPERATIONS, AND THE DURATION OF EXPOSED, UNCOMPLETED CONSTRUCTION TO THE ELEMENTS SHALL BE AS SHORT AS PRACTICABLE. CLEARING AND GRUBBING SHALL BE SO SCHEDULED AND PERFORMED THAT GRADING OPERATIONS CAN FOLLOW IMMEDIATELY THEREAFTER, AND GRADING OPERATIONS SHALL BE SCHEDULED AND PERFORMED THAT PERMANENT EROSION CONTROL FEATURES CAN FOLLOW IMMEDIATELY THEREAFTER IF CONDITIONS ON THE PROJECT PERMIT.

F. THE CONTRACTOR SHALL PROVIDE ROUTINE MAINTENANCE OF PERMANENT AND TEMPORARY EROSION CONTROL FEATURES UNTIL THE PROJECT IS COMPLETE AND ALL DISTURBED SOILS ARE STABILIZED.

GRAPHIC SCALE
0 40' 80'
(IN FEET)
1 inch = 40 ft.

BARNARD ENGINEERING, P.C.
1534 Saratoga Blvd., Indian Trail, NC 28079
(704) 421-3067
www.barnardengineeringpc.com
N.C. License No. C-3679
S.C. COA: 4509
GA. License No.: PEF006337

NO.	DATE	BY	REVISION

CITY OF DURHAM TRANSFER STATION SITE PLAN SUBMITTAL
DURHAM, NC
WASTE INDUSTRIES
3301 BENSON DRIVE, SUITE 600
RALEIGH NC

GENERAL CONSTRUCTION SPECIFICATIONS

DESIGNED	JDB	DRAWN	JDB	CHECKED	JDB
SCALE	AS SHOWN	DATE	10/31/13	PROJECT NO:	2013-6

NORTH CAROLINA PROFESSIONAL SEAL 19665 ENGINEER JOHN D. BARNARD

SHEET:
C-20

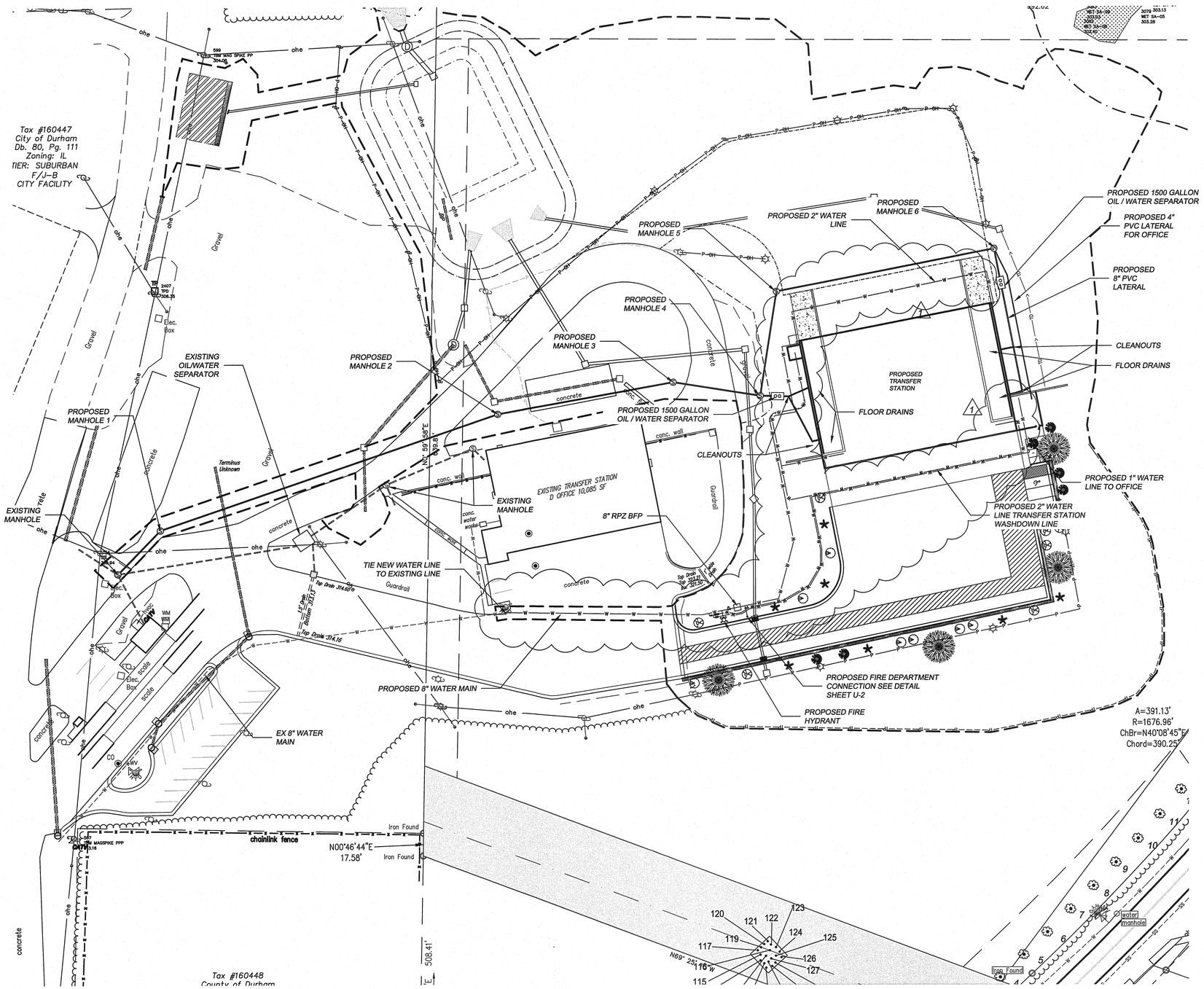

NOTE:

1. SEWER PERMIT REQUIRED
2. ALL UTLITIES TO BE INSTALLED IN ACCORDANCE WITH CITY OF DURHAM STANDARDS AND SPECIFICATIONS.
3. PROVIDE CORED HOLE WITH RUBBER BOOT WHERE NEW SEWER LINE TIES TO EXISTING MANHOLE
4. SEE SHEET U-4 FOR WATER SYSTEM DETAILS
5. TOPOGRAPHIC INFORMATION IS NOT SHOWN FOR CLARITY. SEE GRADING PLANS FOR TOPOGRAPHIC INFORMATION.

GRAPHIC SCALE

0 40' 80'

(IN FEET)
1 inch = 40 ft.

BARNARD ENGINEERING, P.C.
1534 Saratoga Blvd., Indian Trail, NC 28079
(704) 421-9067
www.barnardengineeringpc.com
N.C. License No. C-3679
S.C. COA. 4599
GA. License No. PEF 006337

NO.	DATE	BY	REVISION
1	3-10-14	JDB	CITY OF DURHAM FIRST REVIEW AND INTERNAL REVISIONS

CITY OF DURHAM TRANSFER STATION SITE PLAN SUBMITTAL
DURHAM, NC

WASTE INDUSTRIES
3301 BENSON DRIVE, SUITE 600
RALEIGH NC

OVERALL UTILITY PLAN

DESIGNED	JDB	DRAWN	JDB	CHECKED	JDB
SCALE	AS SHOWN	DATE	10/31/13	PROJECT NO.	2013-6

NORTH CAROLINA PROFESSIONAL SEAL 19665 ENGINEER JOHN D. BARNARD

SHEET:

U-1

NOTE:
1. SEWER PERMIT REQUIRED
2. ALL UTLITIES TO BE INSTALLED IN ACCORDANCE WITH CITY OF DURHAM STANDARDS AND SPECIFICATIONS.
3. PROVIDE CORED HOLE WITH RUBBER BOOT WHERE NEW SEWER LINE TIES TO EXISTING MANHOLE

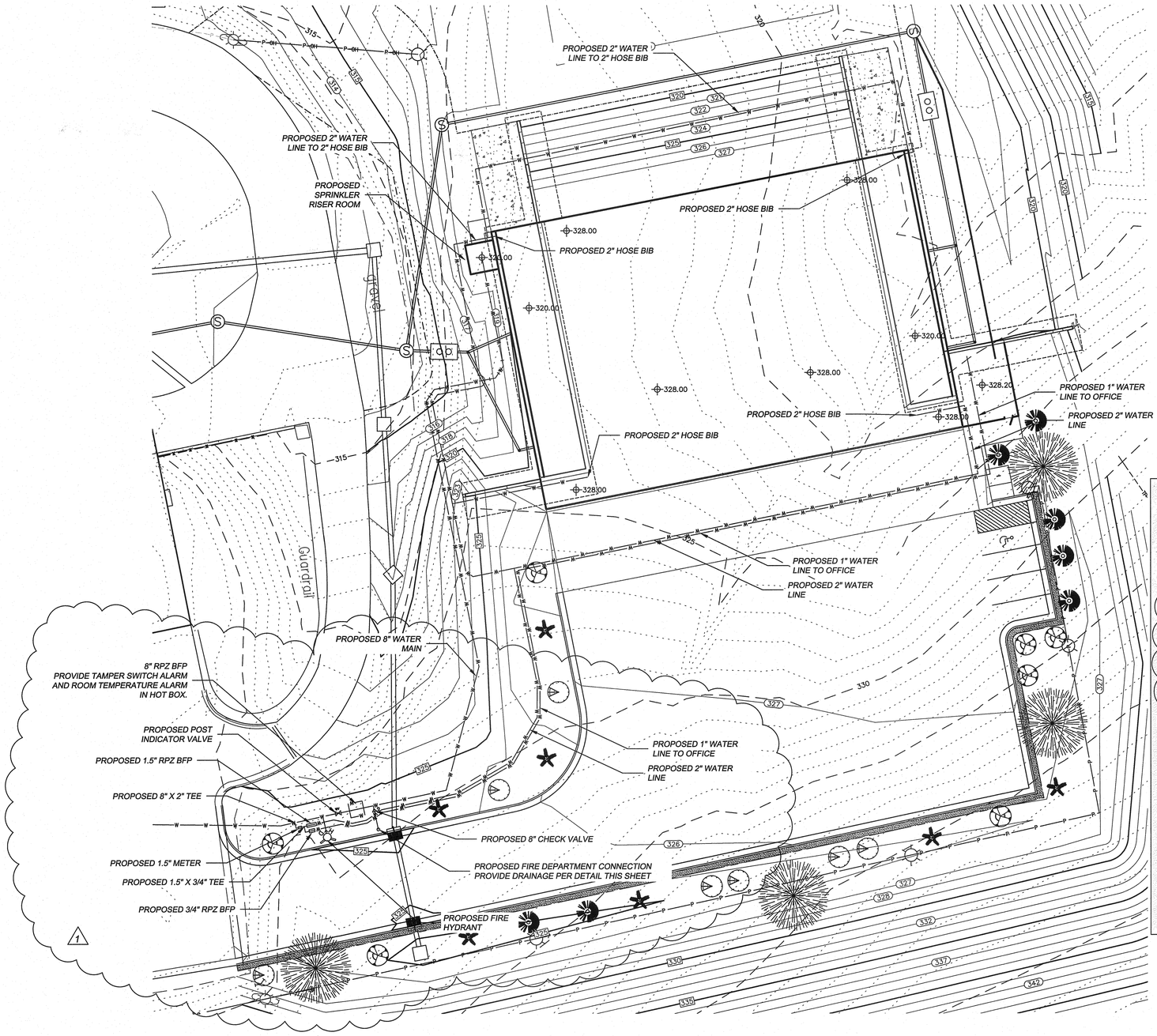

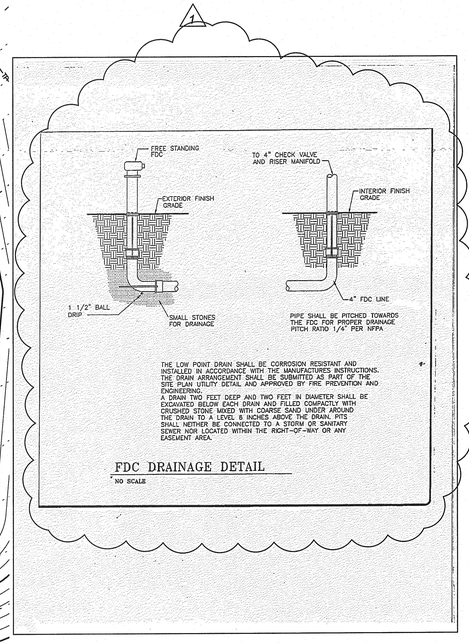

GRAPHIC SCALE
0 20' 40'
(IN FEET)
1 inch = 20 ft.

BARNARD ENGINEERING, P.C.
1534 Saratoga Blvd. Indian Trail, NC 28079
(704) 421-3067
www.barnardengineerpc.com
N.C. License No. C-3679
S.C. COA No. 5679
GA. License No. PEF 006537

NO.	DATE	BY	REVISION
1	3-10-14	JDB	CITY OF DURHAM FIRST SITE PLAN REVIEW

CITY OF DURHAM TRANSFER STATION SITE PLAN SUBMITTAL
DURHAM, NC
WASTE INDUSTRIES
3301 BENSON DRIVE, SUITE 600
RALEIGH NC

WATER SYSTEM DETAIL

DESIGNED	DRAWN	CHECKED
JDB	JDB	JDB
SCALE	DATE	PROJECT NO.
AS SHOWN	10/31/13	2013-6

NORTH CAROLINA PROFESSIONAL SEAL 19665 ENGINEER JOHN D. BARNARD

SHEET:
U-2

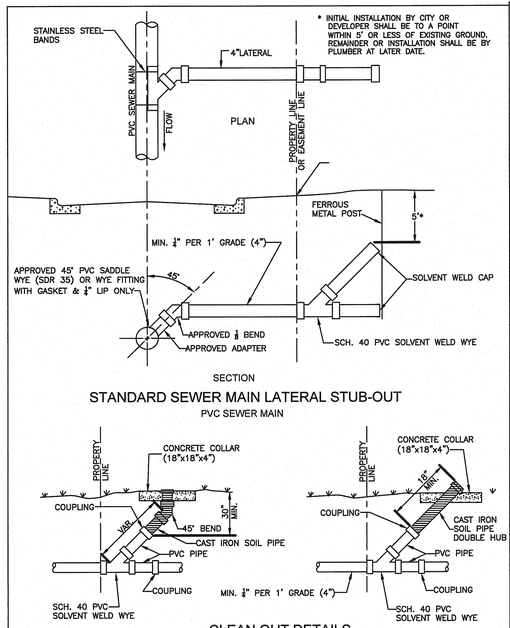

STANDARD SEWER MAIN LATERAL STUB-OUT

PVC SEWER MAIN

CLEAN OUT DETAILS

INSTALLED BY PLUMBER

DURHAM 1869 CITY OF MEDICINE

REVISION DATE: 05/21/2009	SANITARY SEWER LATERAL 4" SEWER LATERAL CITY OF DURHAM, NORTH CAROLINA DEPARTMENT OF PUBLIC WORKS	SCALE: NTS DETAIL NO. SS-1.0

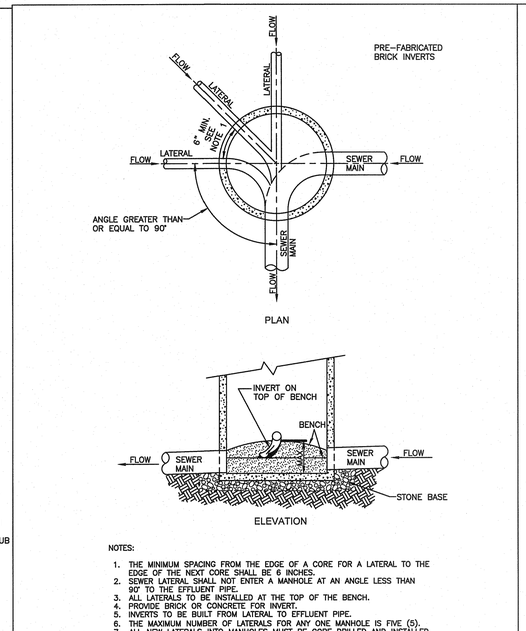

NOTES:

1. THE MINIMUM SPACING FROM THE EDGE OF A CORE FOR A LATERAL TO THE EDGE OF THE NEXT CORE SHALL BE 6 INCHES.
2. SEWER LATERAL SHALL NOT ENTER A MANHOLE AT AN ANGLE LESS THAN 90° TO THE EFFLUENT PIPE.
3. ALL LATERALS TO BE INSTALLED AT THE TOP OF THE BENCH.
4. PROVIDE BRICK OR CONCRETE FOR INVERT.
5. INVERTS TO BE BUILT FROM LATERAL TO EFFLUENT PIPE.
6. THE MAXIMUM NUMBER OF LATERALS FOR ANY ONE MANHOLE IS FIVE (5).
7. ALL NEW LATERALS INTO MANHOLES MUST BE CORE DRILLED AND INSTALLED WITH A FLEXIBLE RUBBER BOOT.

DURHAM 1869 CITY OF MEDICINE

REVISION DATE: 03/18/2010	SANITARY SEWER LATERAL AT MANHOLE CITY OF DURHAM, NORTH CAROLINA DEPARTMENT OF PUBLIC WORKS	SCALE: NTS DETAIL NO. SS-1.2

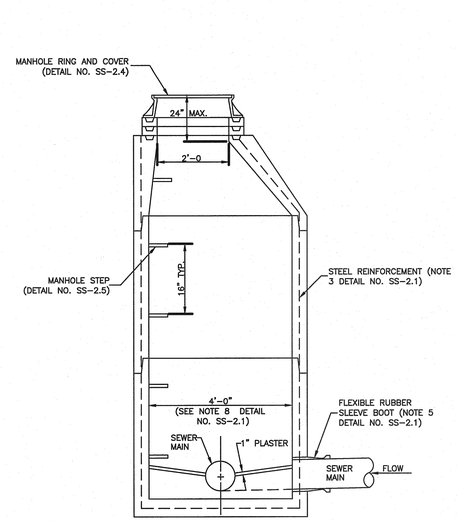

DURHAM 1869 CITY OF MEDICINE

REVISION DATE: 03/18/2010	PRECAST CONCRETE SANITARY SEWER MANHOLE CITY OF DURHAM, NORTH CAROLINA DEPARTMENT OF PUBLIC WORKS	SCALE: NTS DETAIL NO. SS-2.0

NOTES

1. ALL PRE CAST CONCRETE MANHOLES SHALL CONFORM TO THE LATEST REVISION OF ASTM C478.
2. CONCRETE SHALL BE 4000 PSI AT 28 DAYS MINIMUM.
3. STEEL REINFORCEMENT SHALL BE GRADE 40 BILLET STEEL CONFORMING TO THE LATEST REVISION OF ASTM-A-185 FOR WALL REINFORCEMENT, AND THE LATEST REVISION OF ASTM-A615 FOR THE BASE REINFORCEMENT.
4. STANDARD JOINTS SHALL BE; SEALED WITH PUTTY TYPE PLASTIC CEMENT PER FED. SPEC. SS-C-153 OR AN O-RING TYPE JOINT CONFORMING TO THE LATEST REVISION OF ASTM-C443.
5. MANHOLE INLETS AND OUTLETS SHALL BE CAST IN PLACE FLEXIBLE RUBBER SLEEVES BOOTS PER THE LATEST REVISION OF ASTM-C923.
6. INVERTS TO BE CONSTRUCTED OF BRICK WITH A CONCRETE BENCH (DETAIL NO. SS-2.2).
7. THE MAXIMUM SEPARATION OR INVERT IN TO INVERT OUT WITHIN A MANHOLE IS 0.50 FEET. WHEN THE SEPARATION IS GREATER THAN 0.5 FEET A DROP MANHOLE MUST BE USED.
8. MANHOLES GREATER THAN 18 FEET IN DEPTH SHALL HAVE AN INSIDE DIAMETER OR 5'-0". FOR SANITARY SEWER MAINS GREATER THAN EIGHTEEN INCHES (18") IN DIAMETER, MANHOLES SHALL BE A MINIMUM OF 5'-0" IN DIAMETER.
9. RIM ELEVATIONS SHALL BE AT GRADE IN STREETS & PARKING LOTS.
10. RIM ELEVATIONS ALONG OUTFALLS SHALL BE A MINIMUM OF 3' ABOVE EXISTING GROUND ELEVATION. IF THE OUTFALL IS LOCATED WITHIN THE FLOOD PLAIN, RIM ELEVATIONS SHALL BE 2' ABOVE THE 100-YEAR FLOOD ELEVATION (WHILE STILL MAINTAINING THE 3' ABOVE THE EXISTING GROUND ELEVATION MINIMUM REQUIREMENT). THE 100-YEAR FLOOD ELEVATION SHALL BE NOTED ON THE CONSTRUCTION DRAWINGS.
11. DEPENDING UPON THE HEIGHT OF THE MANHOLE, THE CITY OF DURHAM ENGINEERING DIVISION MAY REQUIRE FLAT MANHOLES, EXTERIOR STEPS AND SAFETY BARS ON TOP OF THE MANHOLE.

DURHAM 1869 CITY OF MEDICINE

REVISION DATE: 12/07/2009	PRECAST CONCRETE SANITARY SEWER MANHOLE NOTES CITY OF DURHAM, NORTH CAROLINA DEPARTMENT OF PUBLIC WORKS	SCALE: NTS DETAIL NO. SS-2.1

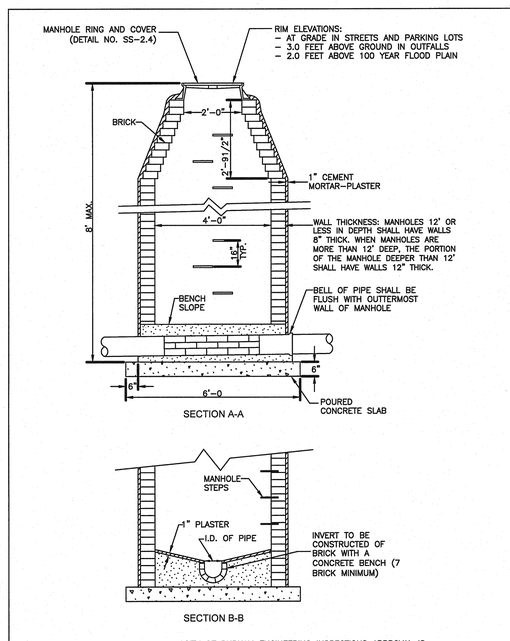

*CITY OF DURHAM ENGINEERING INSPECTIONS APPROVAL IS REQUIRED BEFORE THE USE OF THIS STRUCTURE.

DURHAM 1869 CITY OF MEDICINE

REVISION DATE: 12/07/2009	BRICK SANITARY SEWER MANHOLE CITY OF DURHAM, NORTH CAROLINA DEPARTMENT OF PUBLIC WORKS	SCALE: NTS DETAIL NO. SS-2.2

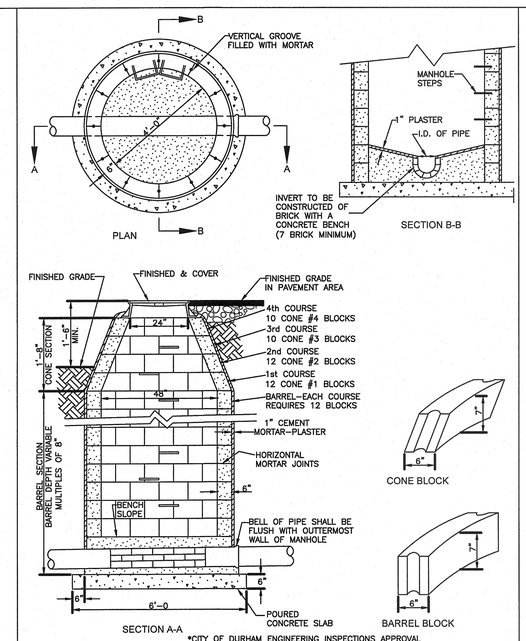

*CITY OF DURHAM ENGINEERING INSPECTIONS APPROVAL IS REQUIRED BEFORE THE USE OF THIS STRUCTURE.

DURHAM 1869 CITY OF MEDICINE

REVISION DATE: 12/07/09	CONCRETE BLOCK SANITARY SEWER MANHOLE CITY OF DURHAM, NORTH CAROLINA DEPARTMENT OF PUBLIC WORKS	SCALE: NTS DETAIL NO. SS-2.3

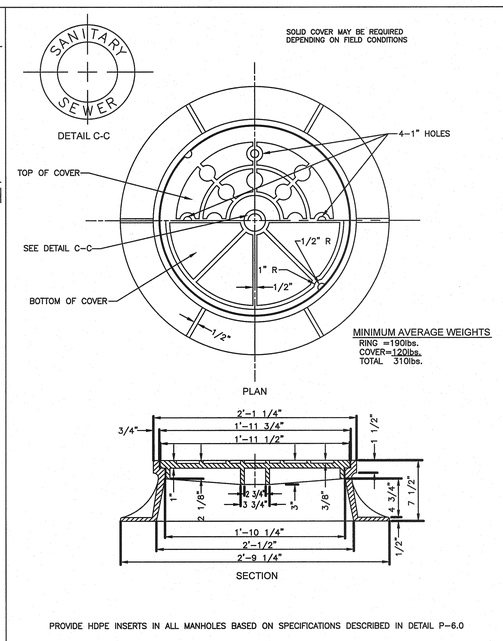

PROVIDE HDPE INSERTS IN ALL MANHOLES BASED ON SPECIFICATIONS DESCRIBED IN DETAIL P-6.0

DURHAM 1869 CITY OF MEDICINE

REVISION DATE: 09/24/10	SANITARY SEWER MANHOLE RING AND COVER CITY OF DURHAM, NORTH CAROLINA DEPARTMENT OF PUBLIC WORKS	SCALE: NTS DETAIL NO. SS-2.4

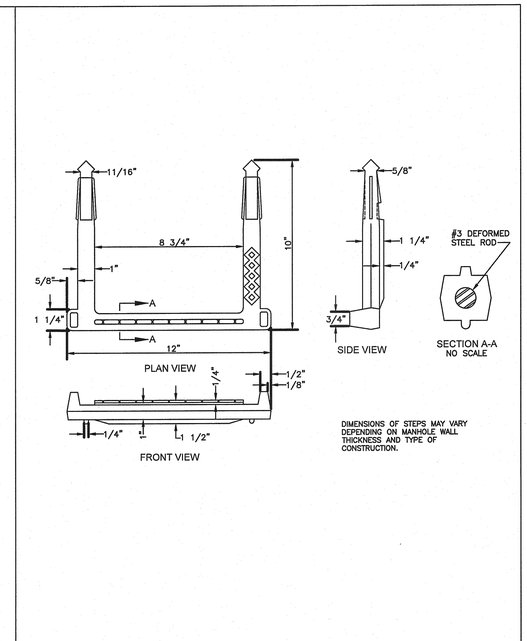

DURHAM 1869 CITY OF MEDICINE

REVISION DATE: 12/072009	PLASTIC COATED SANITARY SEWER MANHOLE STEPS CITY OF DURHAM, NORTH CAROLINA DEPARTMENT OF PUBLIC WORKS	SCALE: NTS DETAIL NO. SS-2.5

BARNARD ENGINEERING, P.C.
1534 Saratoga Blvd., Indian Trail, NC 28079
(704) 421-3067
www.barnardengineeringpc.com
N.C. License No. C-3679
S.C. COA. 4599
GA. License No. PEF 006337

NO.	DATE	BY	REVISION

CITY OF DURHAM TRANSFER STATION SITE PLAN SUBMITTAL
DURHAM, NC

WASTE INDUSTRIES
3301 BENSON DRIVE, SUITE 600
RALEIGH NC

SEWER AND WATER DETAILS
SHEET 1 OF 3

DESIGNED	JDB	DRAWN	JDB	CHECKED	JDB
SCALE	AS SHOWN	DATE	10/31/13	PROJECT NO.	2013-6

NORTH CAROLINA PROFESSIONAL SEAL 19665 ENGINEER JOHN D. BARNARD

SHEET:

U-3

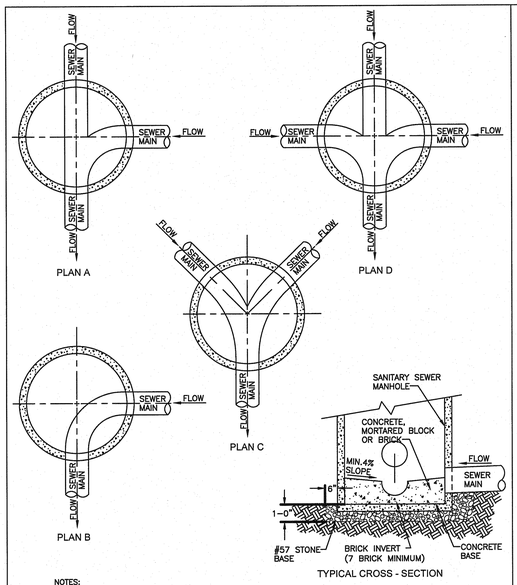

NOTES:

1. INVERT MATERIAL SHALL BE CONCRETE CAST IN PLACE WITH A SMOOTH FINISH.
2. WIDTH OF INVERT SHALL MATCH INSIDE DIAMETER OF INCOMING AND OUTGOING PIPES.
3. BRICK INVERT SHALL BE FORMED AS SHOWN.
4. ALL INVERT ELEVATIONS SHALL BE AS SHOWN ON APPROVED CONSTRUCTION PLANS.
5. BENCHES TO BE BUILT OUT OF CONCRETE, MORTARED BLOCK OR BRICK. STONE IS NOT ACCEPTABLE.

DURHAM 1869 CITY OF MEDICINE

REVISION DATE: 12/07/2009	SANITARY SEWER MANHOLE INVERT CITY OF DURHAM, NORTH CAROLINA DEPARTMENT OF PUBLIC WORKS	SCALE: NTS DETAIL NO. SS-2.6

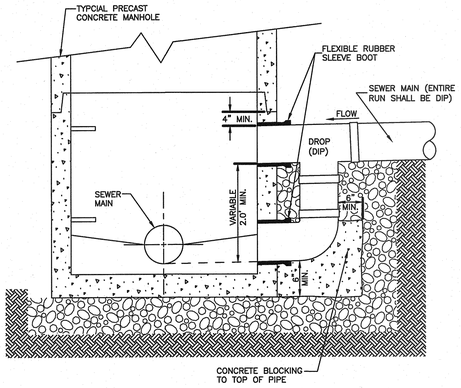

DURHAM 1869 CITY OF MEDICINE

REVISION DATE: 12/07/2009	SANITARY SEWER DROP MANHOLE CITY OF DURHAM, NORTH CAROLINA DEPARTMENT OF PUBLIC WORKS	SCALE: NTS DETAIL NO. SS-2.7

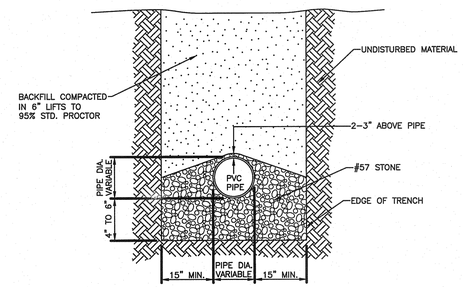

DURHAM 1869 CITY OF MEDICINE

REVISION DATE: 12/07/2009	PVC PIPE BACKFILL CITY OF DURHAM, NORTH CAROLINA DEPARTMENT OF PUBLIC WORKS	SCALE: NTS DETAIL NO. SS-5.0

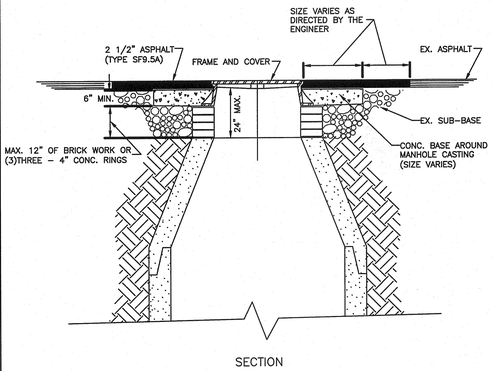

DURHAM 1869 CITY OF MEDICINE

REVISION DATE: 12/07/2009	MANHOLE ADJUSTMENT IN PAVED STREET CITY OF DURHAM, NORTH CAROLINA DEPARTMENT OF PUBLIC WORKS	SCALE: NTS DETAIL NO. P-3.0

NOTES

1. IN ALL MANHOLES, SEWER AND WATER, REGARDLESS OF LOCATION, ULTRA HDPE INSERTS, WITH POLYPROPYLENE HANDLES, ARE TO BE INSTALLED. ADDITIONALLY, ALL OC BOXES AT WATER VALVES, HDPE INSERTS ARE TO BE INSTALLED.
2. THE INSERTS SHALL BE MANUFACTURED OF HDPE, MEETING THE STANDARDS OF ASTM D-1248, CLASS A, CATEGORY 5, TYPE III. THE MINIMUM UNIFORM THICKNESS SHALL BE ⅛". THERE SHALL BE A POLYETHYLENE OR POLYPROPYLENE REMOVAL STRAP, RIVETED TO THE STRAP. VENTILATION CAN BE BY EITHER A VENT HOLE OR A VALVE, LOCATED ON THE SIDE OF THE BOWL. THE VENT WILL LIMIT 24 HOUR INFLOW TO 5 GALLONS. PROPER DIMENSIONS OF THE MANHOLE FRAME AND COVER MUST BE SUPPLIED TO THE INSERT MANUFACTURERS, TO DETERMINE THE EXACT MODEL OF INSERT NEEDED. ACCEPTABLE MANUFACTURERS/STYLES SHALL BE: (1) PARSONS ENVIRONMENTAL PRODUCTS, INC., WWW.PARSONSENVIRONMENTAL.COM, READING, PA. (2) NOFLOW INFLOW, DOUG MEADOWS CO., WWW.NOFLOWINFLOW.COM, ABILENE, TX.

DURHAM 1869 CITY OF MEDICINE

REVISION DATE: 9/24/2010	MANHOLE AND VALVE BOX INSERTS CITY OF DURHAM, NORTH CAROLINA DEPARTMENT OF PUBLIC WORKS	SCALE: NTS DETAIL NO. P-6.0

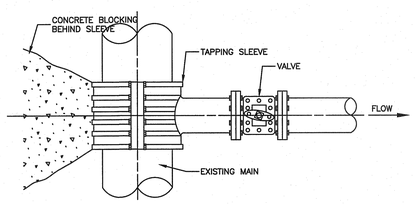

PLAN

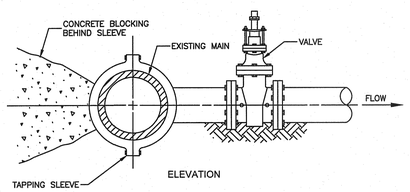

ELEVATION

GENERAL NOTES:

1. 3000 P.S.I. SOLID CONCRETE BLOCKING BEHIND SLEEVE.
2. CONCRETE SHALL NOT CONTACT BOLTS OR ENDS OF MECHANICAL JOINT FITTINGS.
3. 12" X 12" AND 16" X 16" TAPPING SLEEVE IS NOT ALLOWED.

DURHAM 1869 CITY OF MEDICINE

REVISION DATE: 12/07/2009	STANDARD TAPPING SLEEVE AND VALVE ASSEMBLY CITY OF DURHAM, NORTH CAROLINA DEPARTMENT OF PUBLIC WORKS	SCALE: NTS DETAIL NO. W-1.0

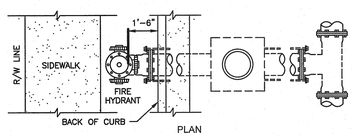

PLAN

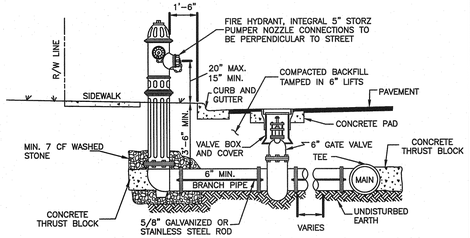

ELEVATION

GENERAL NOTES:

1. ALL CONCRETE BLOCKING SHALL BE 3000 P.S.I. MINIMUM.
2. ALL HYDRANT VALVES SHALL BE RODDED TO MAIN LINE.
3. CONCRETE PAD REQUIRED ON ALL VALVES. (DETAIL NO. W-6.0).
4. HYDRANT TO BE LOCATED 10' FROM P.T. OR P.C. AT INTERSECTIONS.
5. THE HYDRANT PUMPER NOZZLE SHALL BE OF ONE-PIECE DESIGN.
6. THE NOZZLE SHALL BE AN INTEGRAL PART OF THE FIRE HYDRANT AND MUST BE FURNISHED BY THE MANUFACTURER OR AUTHORIZED DISTRIBUTOR. ADAPTERS WILL NOT BE ACCEPTED.
7. ALL FIRE HYDRANTS ARE TO BE PAINTED NATIONAL STANDARD "SAFETY RED".

DURHAM 1869 CITY OF MEDICINE

REVISION DATE: 09/24/2010	FIRE HYDRANT INSTALLATION STANDARD CURB AND GUTTER CITY OF DURHAM, NORTH CAROLINA DEPARTMENT OF PUBLIC WORKS	SCALE: NTS DETAIL NO. W-2.0

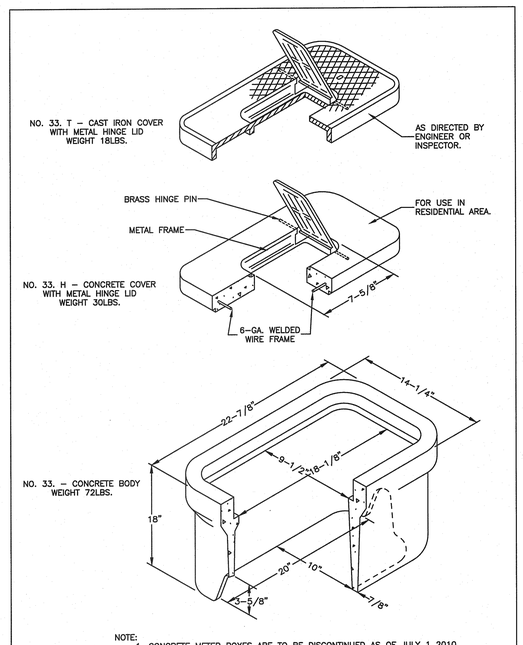

NOTE:
1. CONCRETE METER BOXES ARE TO BE DISCONTINUED AS OF JULY 1 2010.

DURHAM 1869 CITY OF MEDICINE

REVISION DATE: 12/07/2009	CONCRETE METER BOX FOR 5/8" AND 1" WATER METERS CITY OF DURHAM, NORTH CAROLINA DEPARTMENT OF PUBLIC WORKS	SCALE: NTS DETAIL NO. W-3.3

BARNARD ENGINEERING, P.C.
1534 Saratoga Blvd., Indian Trail, NC 28079
(704) 421-3067
www.barnardengineering.com
N.C. License No. C-3979
S.C. COA No. 6659
GA. License No. PEF 006337

NO.	DATE	BY	REVISION

CITY OF DURHAM TRANSFER STATION SITE PLAN SUBMITTAL
DURHAM, NC
WASTE INDUSTRIES
3301 BENSON DRIVE, SUITE 600
RALEIGH NC

SEWER AND WATER DETAILS
SHEET 2 OF 3

DESIGNED	DRAWN	CHECKED
JDB	JDB	JDB
SCALE	DATE	PROJECT NO.
AS SHOWN	10/31/13	2013-6

NORTH CAROLINA PROFESSIONAL SEAL 19665 ENGINEER J. D. BARNARD

SHEET:
U-4

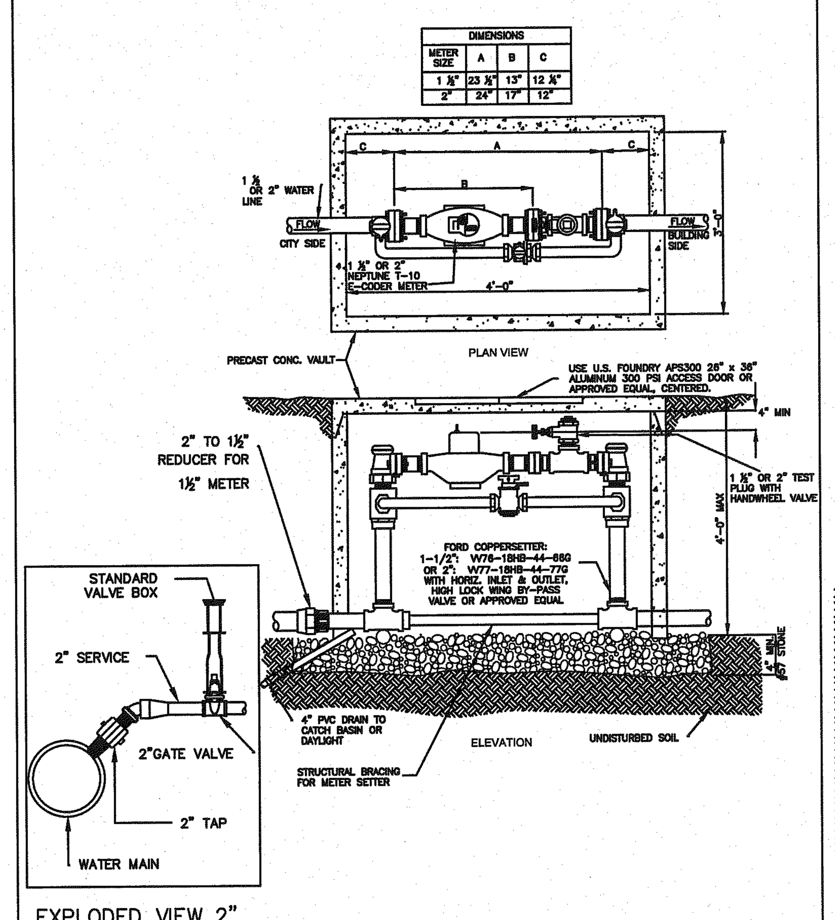

EXPLODED VIEW 2" TAP & 2" GATE VALVE

DURHAM 1869 CITY OF MEDICINE

REVISION DATE: 12/07/2009	1 1/2" & 2" POSITIVE DISPLACEMENT WATER METER INSTALLATION CITY OF DURHAM, NORTH CAROLINA DEPARTMENT OF PUBLIC WORKS	SCALE: NONE DETAIL NO. W-4.0

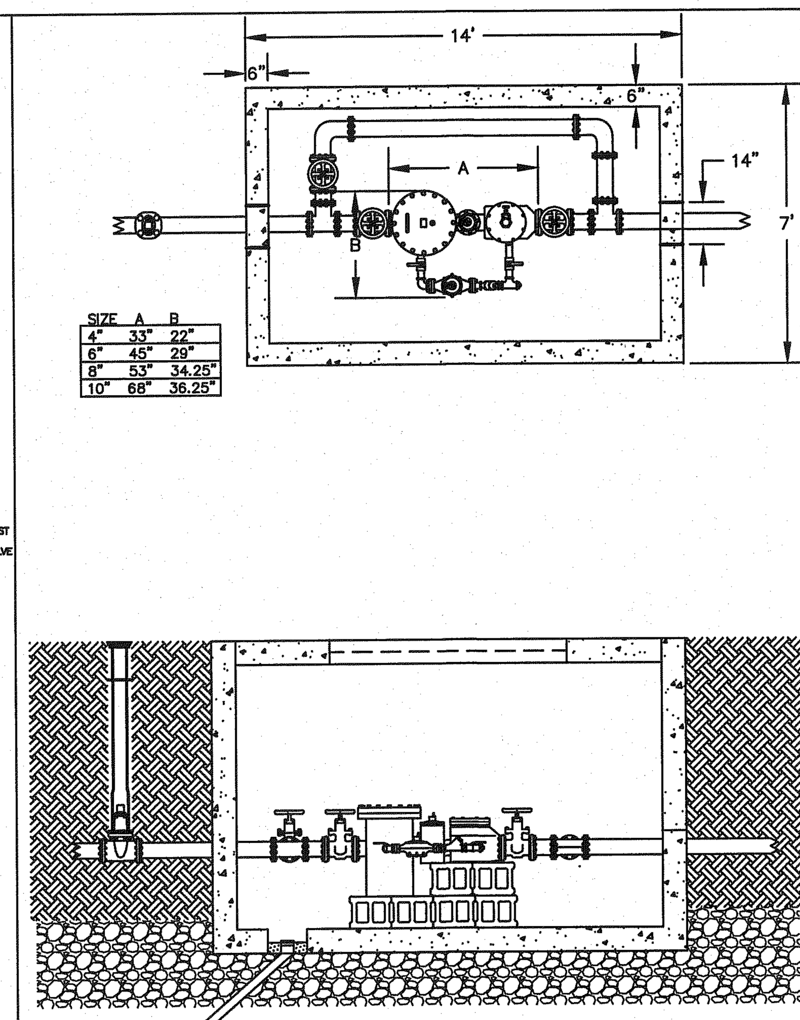

DURHAM 1869 CITY OF MEDICINE

REVISION DATE: 12/07/2009	FIRELINE METER AND METER VAULT 4", 6", 8", & 10" METERS CITY OF DURHAM, NORTH CAROLINA DEPARTMENT OF PUBLIC WORKS	SCALE: NONE DETAIL NO. W-4.3

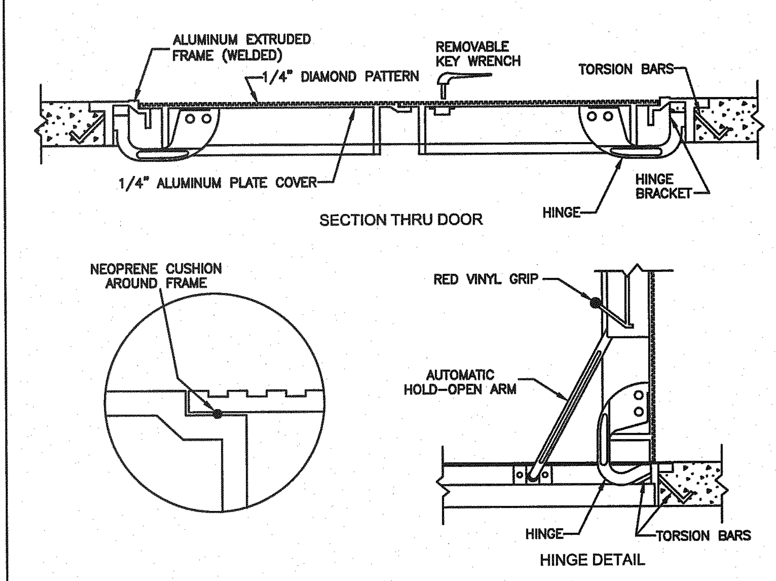

NOTES:

1. ACCESS DOOR SHALL BE A TYPE KD-4 MANUFACTURED BY THE BILCO COMPANY, NEW HAVEN, CONN. OR APPROVED EQUAL.
2. FRAME SHALL BE 1/4" EXTRUDED ALUMINUM WITH BUILT-IN NEOPRENE CUSHION AND WITH STRAP ANCHORS BOLTED TO EXTERIOR.
3. DOOR LEAF SHALL BE 1/4" ALUMINUM DIAMOND PLATE REINFORCED WITH ALUMINUM STIFFNERS AS REQUIRED.
4. CAST STEEL HINGES SHALL BE BOLTED TO UNDERSIDE AND PIVOT ON TORSION BARS THAT COUNTERBALANCE THE DOOR FOR EASY OPERATION.
5. THE DOOR SHALL OPEN 90° AND LOCK AUTOMATICALLY IN THAT POSITION.
6. A VINYL GRIP HANDLE SHALL BE PROVIDED TO RELEASE AND CLOSE THE COVER WITH ONE HAND.
7. DOORS SHALL BE BUILT TO WITHSTAND A LIVE LOAD OF 150 POUNDS PER SQUARE FOOT, AND EQUIPPED WITH A SNAP LOCK AND REMOVABLE HANDLE.
8. FACTORY FINISH SHALL BE ALUMINUM LACQUER, AND BITUMINOUS COATING SHALL BE APPLIED TO THE EXTERIOR FRAME BY THE MANUFACTURER.

NOTE: FOR 4", 6", AND 8" METERS

DURHAM 1869 CITY OF MEDICINE

REVISION DATE: 03/18/2009	5' X 5' ALUMINUM ACCESS DOOR FOR 4" TO 8" WATER METER VAULTS CITY OF DURHAM, NORTH CAROLINA DEPARTMENT OF PUBLIC WORKS	SCALE: NTS DETAIL NO. W-5.1

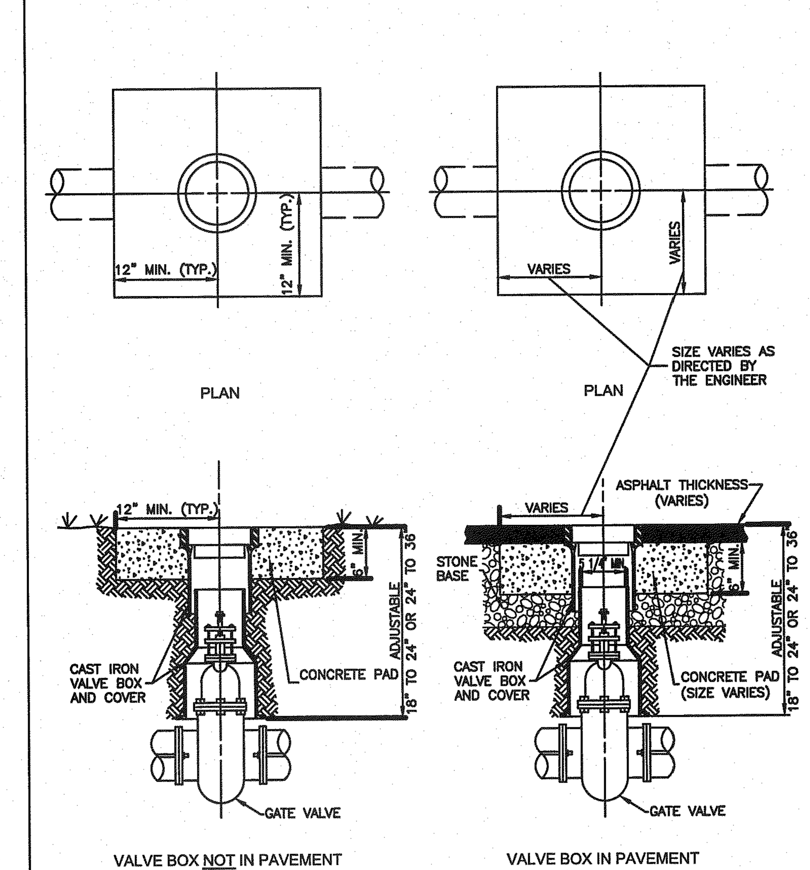

PROVIDE HDPE INSERTS IN ALL VALVE BOXES BASED ON SPECIFICATIONS DESCRIBED IN DETAIL P-6.0

DURHAM 1869 CITY OF MEDICINE

REVISION DATE: 09/242010	WATER VALVE BOX INSTALLATION FOR 4", 6", 8", AND 12" GATE VALVES CITY OF DURHAM, NORTH CAROLINA DEPARTMENT OF PUBLIC WORKS	SCALE: NTS DETAIL NO. W-6.0

VALVE PREFERENCE TABLE

THE FOLLOWING TABLE SUMMARIZES VALVE TYPES AND ACCESS ALLOWED FOR DIFFERENT SIZED VALVES:

VALVE SIZE (INCHES)	VALVE TYPE	TYPE OF ACCESS	SIZE OF ACCESS (FEET)
12 AND UNDER	RESILIENT WEDGE GATE	VALVE BOX, 2-PIECE SCREW TYPE	STANDARD
14	BUTTERFLY	MANHOLE	4
16	BUTTERFLY	MANHOLE	4
18	BUTTERFLY	MANHOLE	5
20	BUTTERFLY	MANHOLE	5
24	BUTTERFLY	MANHOLE	5
30	BUTTERFLY	MANHOLE	6
36	BUTTERFLY	MANHOLE	6
42	BUTTERFLY	MANHOLE	6

GATE VALVES MAY BE DEEMED NECESSARY BY THE ENGINEERING DIVISION.

DURHAM 1869 CITY OF MEDICINE

REVISION DATE: 12/07/2009	VALVE PREFERENCE TABLE CITY OF DURHAM, NORTH CAROLINA DEPARTMENT OF PUBLIC WORKS	SCALE: NTS DETAIL NO. W-6.1

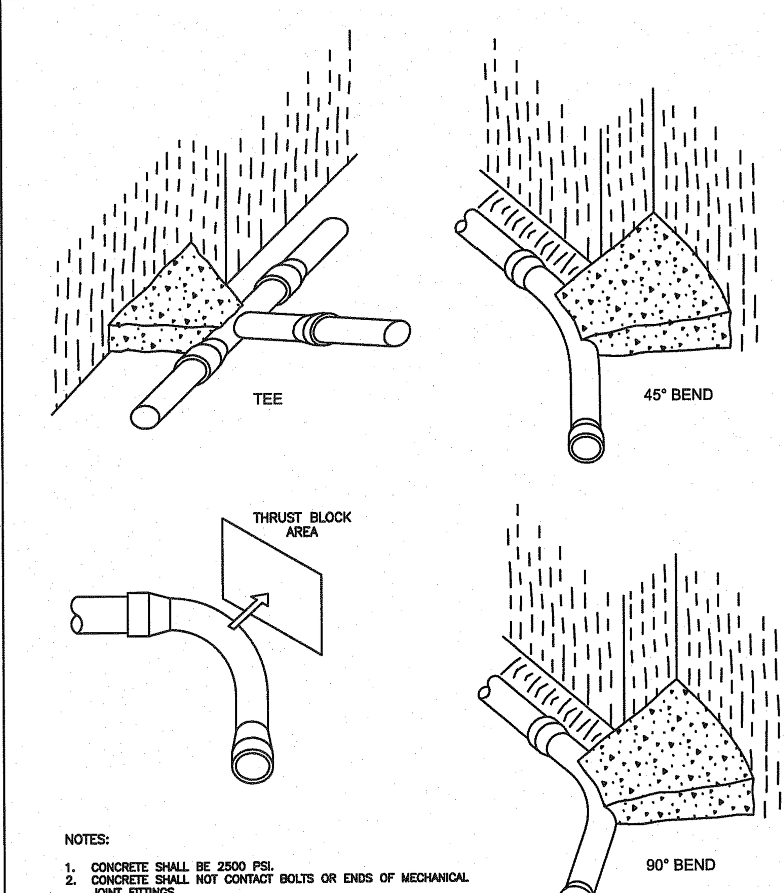

NOTES:

1. CONCRETE SHALL BE 2500 PSI.
2. CONCRETE SHALL NOT CONTACT BOLTS OR ENDS OF MECHANICAL JOINT FITTINGS.
3. TRENCHES SHALL CONFORM TO CITY OF DURHAM SPECIFICATIONS AND STANDARDS.
4. ALL BENDS AND TEES SHALL HAVE CONCRETE THRUST BLOCKING.

DURHAM 1869 CITY OF MEDICINE

REVISION DATE: 12/07/2009	HORIZONTAL THRUST BLOCKING ISOMETRIC VIEWS CITY OF DURHAM, NORTH CAROLINA DEPARTMENT OF PUBLIC WORKS	SCALE: NONE DETAIL NO. W-8.0

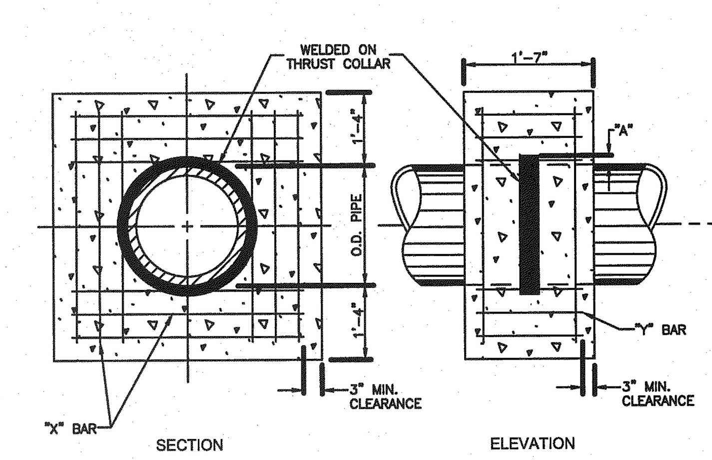

WELDED ON THRUST COLLAR	
I.D. PIPE	"A"
6"-16"	2"
20"-24"	3"
30"-36"	4"

THRUST COLLAR REINFORCING		
	"X" BAR	"Y" BAR
BAR LENGTH	2'-2" + O.D. PIPE	1'-1"
REBAR SIZE	#5	#5
NUMBER REQ'D	24	12

NOTES:

1. CONCRETE SHALL BE 3000 P.S.I
2. REINFORCING BARS SHALL BE DEFORMED, AND TIED TOGETHER.
3. BACKFILL TAMPED IN 6" LAYERS
4. TRENCH BOTTOM WIDTH IN VICINITY OF THRUST BLOCK(S) INSTALLATION SHALL BE THE MINIMUM WIDTH AS DESCRIBED BY THE ENGINEER.

DURHAM 1869 CITY OF MEDICINE

REVISION DATE: 12/07/2009	CONCRETE THRUST BLOCK CITY OF DURHAM, NORTH CAROLINA DEPARTMENT OF PUBLIC WORKS	SCALE: NTS DETAIL NO. W-8.1

SIZE AND DEGREE OF BEND	STATIC THRUST IN POUNDS	CLAY FAIRLY DRY 4,00LBS/SQ. FT.	CLAY SOFT 2000LBS/SQ. FT.	GRAVEL & COARSE SAND 1,500 LBS/SQ. FT.	CLAY ALWAYS DRY 8,000 LBS/SQ. FT.	SAND COMPACT FIRM 8,000 LBS/SQ. FT.	SAND CLEAN & DRY 4,000 LBS/SQ. FT.	QUICKSAND VERY POOR 1,000 LBS/SQ. FT.	ROCK POOR 10,000 LBS/SQ. FT.
6" PIPE									
11 1/4°	1,108	1	1	1	1	1	1	2	1
22 1/2°	2,207	1	2	2	1	1	1	3	1
45°	4,328	2	3	3	1	1	2	5	1
90°	7,996	2	4	5	1	1	2	8	1
PLUG OR TEE	5,655	2	3	4	1	1	2	6	1
8" PIPE									
11 1/4°	1,970	1	1	2	1	1	1	2	1
22 1/2°	3,922	1	2	3	1	1	1	4	1
45°	7,694	2	4	5	1	1	2	8	1
90°	14,215	4	8	9	2	2	4	15	2
PLUG OR TEE	10,053	3	5	6	2	2	3	10	1
12" PIPE									
11 1/4°	4,433	2	3	3	1	1	2	5	1
22 1/2°	8,826	3	5	6	2	2	3	9	1
45°	17,312	5	9	11	3	3	5	18	2
90°	31,983	8	16	19	4	4	8	32	4
PLUG OR TEE	22,619	6	12	14	3	3	6	23	3
16" PIPE									
11 1/4°	7,881	2	4	5	1	1	2	8	1
22 1/2°	15,691	4	8	10	2	2	4	16	2
45°	7,694	8	16	19	4	4	8	31	4
90°	56,861	15	29	35	8	8	15	57	6
PLUG OR TEE	40,213	10	21	25	5	5	10	41	5
20" PIPE									
11 1/4°	12,315	3	7	8	2	2	3	13	2
22 1/2°	24,517	7	13	15	4	4	7	25	3
45°	48,091	12	24	29	6	6	12	48	5
90°	88,844	23	45	53	12	12	23	89	9
PLUG OR TEE	62,832	16	32	38	8	8	16	63	7
24" PIPE									
11 1/4°	17,734	5	9	11	3	3	5	18	2
22 1/2°	35,305	9	18	22	5	5	9	36	4
45°	69,252	18	35	42	9	9	18	70	7
90°	127,936	32	64	77	16	16	32	128	13
PLUG OR TEE	90,478	23	46	55	12	12	23	91	10
30" PIPE									
11 1/4°	27,709	7	14	17	4	4	7	2	3
22 1/2°	55,163	14	28	34	7	7	14	56	6
45°	108,206	28	55	65	14	14	28	109	11
90°	199,900	50	100	120	25	25	50	200	20
PLUG OR TEE	141,372	36	71	85	18	18	36	142	15
36" PIPE									
11 1/4°	39,901	10	20	24	5	5	10	40	4
22 1/2°	79,435	20	40	48	10	10	20	30	8
45°	155,816	39	78	94	20	20	39	156	16
90°	247,855	72	144	172	36	36	72	288	29
PLUG OR TEE	203,575	51	102	122	26	26	51	204	21

GENERAL NOTES:

1. BASED ON TEST PRESSURE OF 200 P.S.I. ALL AREAS GIVEN IN SQUARE FEET.
2. REACTION BEARING AREAS ARE IN SQUARE FEET MEASURED IN A VERTICAL PLANE IN THE TRENCH SIDE AT AN ANGLE OF 90° TO THE THRUST VECTOR.
3. USE 6"-90° BEND VALUE FOR HYDRANTS FOR ADDITIONAL SAFETY FACTORS.

DURHAM 1869 CITY OF MEDICINE

REVISION DATE: 12/07/2009	HORIZONTAL THRUST BLOCKING SCHEDULE CITY OF DURHAM, NORTH CAROLINA DEPARTMENT OF PUBLIC WORKS	SCALE: NTS DETAIL NO. W-8.2

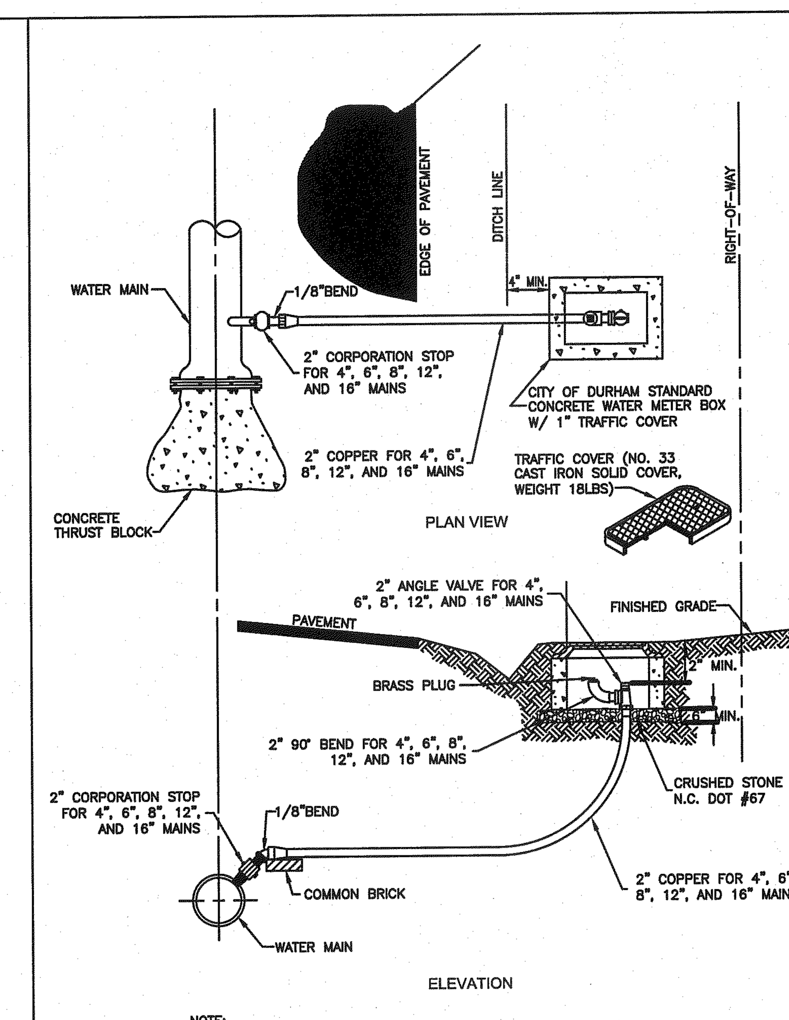

NOTE:
1. EZ HYDRANTS CAN BE REQUIRED AT THE CITY'S DIRECTION.

DURHAM 1869 CITY OF MEDICINE

REVISION DATE: 03/18/2010	BLOW-OFF ASSEMBLY FOR 4",6",8",12", AND 16" WATER MAINS CITY OF DURHAM, NORTH CAROLINA DEPARTMENT OF PUBLIC WORKS	SCALE: NTS DETAIL NO. W-9.0

BARNARD ENGINEERING, P.C.
1534 Saratoga Blvd., Indian Trail, NC 28079
(704) 421-3067
www.barnardengineeringpc.com
N.C. License No. C-3679
S.C. COA. 4509
GA. License No. PEF 006337

NO.	DATE	BY	REVISION

CITY OF DURHAM TRANSFER STATION SITE PLAN SUBMITTAL
DURHAM, NC

WASTE INDUSTRIES
3301 BENSON DRIVE, SUITE 600
RALEIGH NC

SEWER AND WATER DETAILS
SHEET 3 OF 3

DESIGNED	DRAWN	CHECKED
JDB	JDB	JDB

SCALE	DATE	PROJECT NO.:
AS SHOWN	10/31/13	2013-6

NORTH CAROLINA PROFESSIONAL SEAL 19665 ENGINEER D. BARNARD

SHEET:
U-5

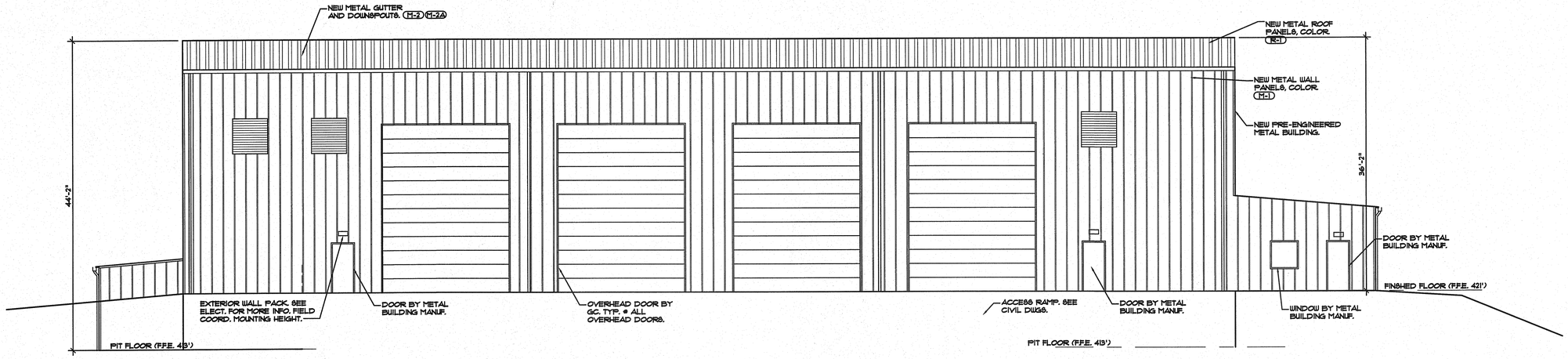

1 ELEV. @ FRONT
SCALE: 1/8" = 1'-0"

	MATERIAL	MANUFACTURER	COLOR SPECIFICATION
M-1	METAL BUILDING PANELS	NUCOR BUILDING SYSTEMS	LIGHTSTONE
M-2	METAL GUTTERS/TRIM	NUCOR BUILDING SYSTEMS	BURNISHED SLATE
M-2A	METAL DOWNSPOUTS	NUCOR BUILDING SYSTEMS	LIGHTSTONE
D-1	EXTERIOR DOORS	NUCOR BUILDING SYSTEMS	WHITE
W-1	WINDOWS	NUCOR BUILDING SYSTEMS	WHITE
R-1	METAL ROOF PANELS	NUCOR BUILDING SYSTEMS	GALVALUME
OD-1	OVERHEAD DOORS	OVERHEAD DOOR CO. (OR EQUAL)	MATCH LIGHTSTONE

NOTE: CONFIRM ALL COLORS AND MATERIALS W/ OWNER PRIOR TO ORDERING.

2 EXTERIOR COLOR SCHEDULE
SCALE: NONE

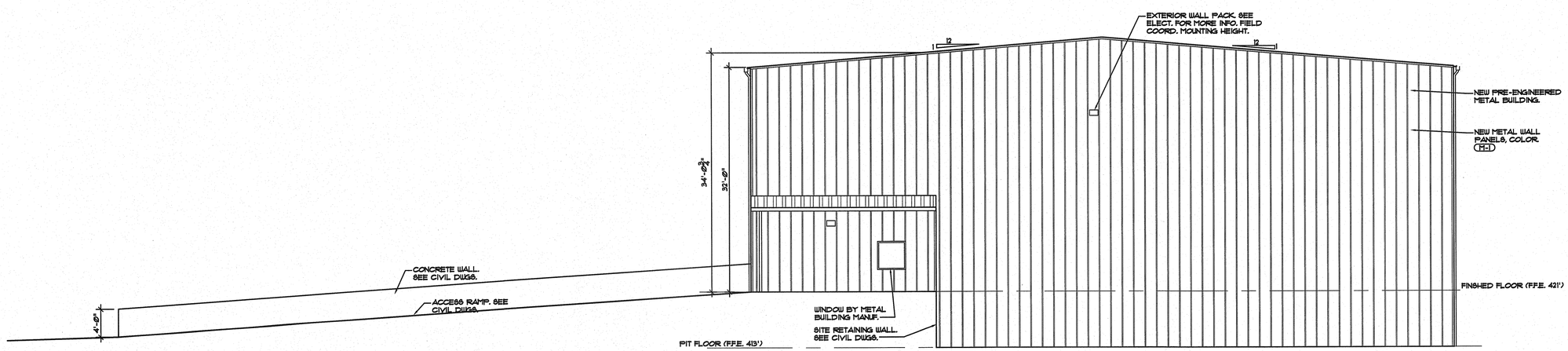

3 ELEV. @ RIGHT SIDE
SCALE: 1/8" = 1'-0"

FOR REFERENCE ONLY
NOT FOR CONSTRUCTION

GONTRAM ARCHITECTURE, INC.
220 HORIZON DR., SUITE 221
RALEIGH, NC 27615
PHONE: 919.876.5331
FAX: 919.876.5978
eddie@gontramarchitecture.com
www.gontramarchitecture.com

© Copyright 2013
THESE DOCUMENTS ARE INSTRUMENTS OF SERVICE AND AS SUCH REMAIN THE PROPERTY OF THE ARCHITECT. PUBLISH OR USE THEM ONLY WITH THE ARCHITECT'S EXPRESSED WRITTEN APPROVAL.

EDMUND J. GONTRAM III REGISTERED ARCHITECT 7437 NORTH CAROLINA RALEIGH, N.C.
Nov 21 2013 10:13 AM

GONTRAM ARCHITECTURE, INC. CERT. NO. 51355 REGISTERED ARCHITECTURAL CORPORATION NORTH CAROLINA RALEIGH, N.C.

TRANSFER STATION/RECYCLERY
A PROJECT FOR WASTE INDUSTRIES
2115 EAST CLUB BLVD.
DURHAM, NORTH CAROLINA

PLOT DATE: NOV. 21, 2013
ISSUED: NOV. 21, 2013 FOR SPA

DRAWN BY: AP
APPROVED: EJG
PROJECT NO.: 12067
RECORD:
CONTENTS: EXT. ELEVATIONS COLOR SCHED.

SHEET: A501 OF 8

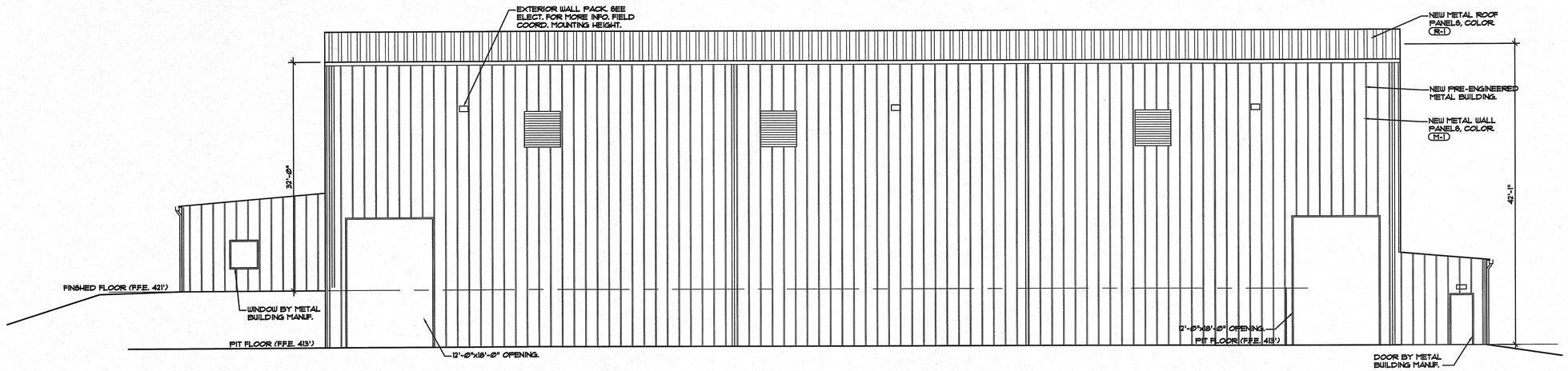

1 ELEV. @ REAR
SCALE: 1/8" = 1'-0"

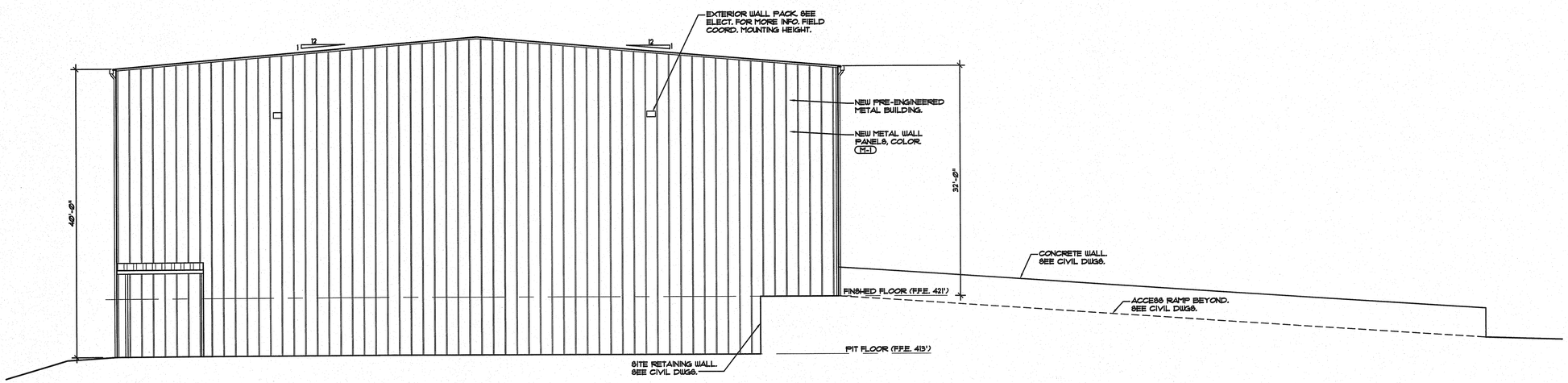

2 ELEV. @ LEFT SIDE
SCALE: 1/8" = 1'-0" .

FOR REFERENCE ONLY
NOT FOR CONSTRUCTION

GONTRAM ARCHITECTURE, INC.
220 HORIZON DR., SUITE 221
RALEIGH, NC 27615
PHONE: 919.876.5331
FAX: 919.876.5978
eddie@gontramarchitecture.com
www.gontramarchitecture.com

© Copyright 2013
THESE DOCUMENTS ARE INSTRUMENTS OF SERVICE AND AS SUCH REMAIN THE PROPERTY OF THE ARCHITECT. PUBLISH OR USE THEM ONLY WITH THE ARCHITECT'S EXPRESSED WRITTEN APPROVAL.

EDWARD J. GONTRAM III REGISTERED ARCHITECT 7377 RALEIGH, N.C.
Nov 21 2013 10:13 AM

GONTRAM ARCHITECTURE, INC. REGISTERED ARCHITECTURAL CORPORATION CERT. NO. 51355 NORTH CAROLINA RALEIGH, N.C.

TRANSFER STATION/RECYCLERY
A PROJECT FOR WASTE INDUSTRIES
2115 EAST CLUB BLVD.
DURHAM, NORTH CAROLINA

PLOT DATE: NOV. 21, 2013
ISSUED: NOV. 21, 2013 FOR SPA

DRAWN BY: AP	APPROVED: EJG
PROJECT NO.: 12067	RECORD:

CONTENTS: EXT. ELEVATIONS

SHEET: A502 OF 8