Scanned By	Date	DOC ID	Permit
Backus	08/26/2014	21653	3212-HHW-2014

CITY OF DURHAM
HOUSEHOLD HAZARDOUS WASTE
CUSTOMER DROP-OFF FACILITY

2115 EAST CLUB BLVD
DURHAM, NC 27704

PIN: 0842-01-18-1935

DEVELOPMENT TEAM

OWNER
CITY OF DURHAM
101 CITY HALL PLAZA
DURHAM, NC 27701
919-560-1200

BUILDING ENGINEER
CHA COMPANIES
8720 RED OAK BLVD, STE 505
CHARLOTTE, NC 28217-4938
CONTACT: ADAM HOGAN
(704) 527-3227

SITE ENGINEER
CH ENGINEERING, PLLC
3220 GLEN ROYAL ROAD
RALEIGH, NC 27617
CONTACT: ERIC TWEED
919-788-0224

SHEETS

C-001: COVER
C-002: DEMOLITION PLAN & EXISTING CONDITIONS
C-003: SITE PLAN
C-004: SITE DETAILS
S-001: GENERAL NOTES & DESIGN
S-101: FOUNDATION PLAN
S-201: ROOF FRAMING PLAN
S-401: SECTIONS AND TYPICAL SECTIONS, DETAILS AND SCHEDULES
E-001: ELECTRICAL LEGEND AND ABBREVIATIONS
E-101: ELECTRICAL LIGHTING AND POWER PLAN

SITE DATA TABLE

SITE AREA: 68.91 AC
PIN: 0842-01-18-1935
USE: **PUBL SVC/ SEWER & WATER**
ZONING: IL
DEVELOPMENT TIER: SUBURBAN
FLOOD ELEV: APPROX. 295 FT
FIRM PANEL 0842J EFFECTIVE MAY 2, 2006

CANOPY GSF = 3,335 SF
CANOPY HEIGHT = 20FT (1 STORY)

SETBACKS:
REAR: 25'
FRONT: 40'
SIDE: 20'
CORNER: 40'

BUFFERS:
REAR: N/A
FRONT: N/A
SIDE: N/A
CORNER: N/A

IMPERVIOUS SURFACE:
ADDING 0 SF= 0.00 AC
PERCENT INCREASED=0.00%

OPEN SPACE/EXISTING: NA

WATERSHED OVERLAY: F/J-B
RIVER BASIN: NEUSE

TOTAL DISTURBED AREA: 1100SF

BICYCLE PARKING NOT REQ'D
PARKING SPACES NOT REQ'D

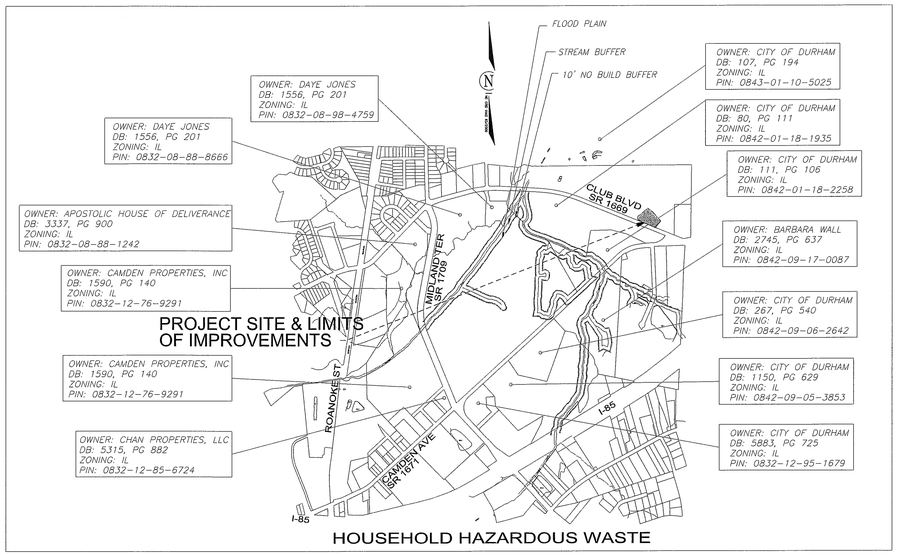

GENERAL STANDARD NOTES:
1. TOPOGRAPHIC INFORMATION AND STRUCTURE & UTILITY LOCATIONS TAKEN FROM SURVEY PROVIDED BY CITY OF DURHAM. UNDERGROUND SUE INFORMATION SHOWN IS APPROXIMATE AND MAY NOT BE A COMPLETE REPRESENTATION OF UNDERGROUND UTILITIES PRESENT AT THE SITE. CONTRACTOR SHALL BE RESPONSIBLE FOR LOCATING ALL UTILITIES AND REPAIRING ANY BROKEN DURING CONSTRUCTION.

2. CONTRACTOR SHALL BE RESPONSIBLE FOR QUANTITIES. ANY NON-LANDSCAPING QUANTITIES GIVEN IN THE PLANS ARE APPROXIMATE AND ARE PROVIDED AS AN ESTIMATE. CONTRACTOR SHALL VERIFIY DIMENSIONS AT THE SITE.

3. TREE PROTECTION NOTE: TREE PROTECTION FENCING MUST BE IN PLACE PRIOR TO ANY DEMOLITION, LAND DISTURBANCE OR ISSUANCE OF A GRADING PERMIT AND SHALL INCLUDE WARNING SIGNS POSTED IN BOTH ENGLISH AND SPANISH, AS FOLLOWS: "NO TRESPASSING/TREE PROTECTION AREA/ PROHIBIDO ENTRAR/ ZONA PROTECTORA PARA LOS ARBOLES."

4. ROOT ZONE PROTECTION AREA: EQUALS ONE FOOT OF RADIUS FOR EVERY INCH OF DIAMETER OF EXISTING TREES, OR SIX FOOT RADIUS, WHICHEVER IS GREATER. NO DISTURBANCE ALLOWED WITHIN THIS AREA. AREA MUST BE PROTECTED WITH BOTH TREE PROTECTON FENCING AND WARNING SIGNS.

5. JOB SITE COPY: A COPY OF THE APPROVED SITE PLAN MUST BE ON SITE AND AVAILABLE FOR PERIODIC INSPECTION AND USE DURING CONSTRUCTION TO EVALUATE COMPLIANCE WITH THE APPROVED SITE PLAN. REQUIRED INSPECTIONS WILL NOT TAKE PLACE IF THE JOBSITE COPY IS NOT AVAILABLE AND RE-INSPECTION FEES WILL BE CHARGED.

6. UDO SIGHT LIGHTING NOTE: MEASURES SHALL BE PROVIDED TO PREVENT LIGHT SPILLOVER ONTO ADJACENT PROPERTIES AND GLARE TOWARD MOTOR VEHICLE OPERATORS AND SHALL BE INDICATED ON THE SITE PLAN. EXTERIOR LIGHTS SHALL BE SHIELDED SO THAT THEY DO NOT CAST DIRECT LIGHT BEYOND THE PROPERTY LINE. IN ACCORDANCE WITH THESE STANDARDS:
A. THE MAXIMUM ILLUMINATION AT THE EDGE OF THE PROPERTY LINE ADJACENT TO RESIDENTIAL ZONING IS 0.5 FOOT CANDLES.
B. THE MAXIMUM ILLUMINATION AT THE EDGE OF THE PROPERTY LINE ADJACENT TO NONRESIDENTIAL ZONING IS 5.0 FOOT CANDLES.
C. THE MAXIMUM ILLUMINATION AT THE EDGE OF THE PROPERTY LINE ADJACENT TO A STREET IS 5.0 FOOT CANDLES.
D. THE LEVEL OF ILLUMINATION AS MEASURED IN FOOT CANDLES AT ANY ONE POINT SHALL MEET THE STANDARDS IN THE TABLE IN UDO SECTION 7.4.3A WITH MINIMUM AND MAXIMUM LEVELS MEASURED ON THE PAVEMENT WITHIN THE LIGHTED AREA.
E. THE MAXIMUM HEIGHT FOR DIRECTIONAL OR FULL CUT-OFF LIGHTING FIXTURES (FIXTURES DESIGNED TO INSURE THAT NO LIGHT IS EMITTED ABOVE A HORIZONTAL LINE PARALLEL TO THE GROUND) SHALL BE 30 FEET ABOVE GRADE (MEASURED TO THE TOP OF THE FIXTURE).
F. THE MAXIMUM HEIGHT FOR NON-DIRECTIONAL LIGHTING FIXTURES, WHICH ARE DEFINED AS FIXTURES DESIGNED TO ALLOW LIGHT TO BE EMITTED ABOVE A HORIZONTAL LINE PARALLEL TO THE GROUND, SHALL BE 15 FEET ABOVE GRADE (MEASURED TO THE TOP OF THE FIXTURE).
G. THESE STANDARDS MUST BE VERIFIED BY FIELD SURVEY (BY USE OF PHOTOMETRIC SURVEY) PRIOR TO THE CERTIFICATE OF COMPLIANCE BEING ISSUED. ALL OF THIS INFORMATION, INCLUDING DETAILS,WILL BE REQUIRED ON BUILDING PLANS PRIOR TO ISSUANCE OF BUILDING PERMIT.

7. LANDSCAPE REINSPECTION FEE: EACH LANDSCAPING COMPLIANCE INSPECTION AFTER THE INITIAL INSPECTION WILL INCUR A REINSPECTION FEE, STARTING AT $100 +%4 TECHNOLOGY SURCHARGE. EACH SUBSEQUENT REINSPECTION WILL INCREASE BY $100 +4% (EXAMPLE 1ST -$104, 2ND -$208, 3RD -$312, ETC). PAYMENT MUST BE RE-CEIVED BY THE DURHAM CITY COUNTY PLANNING DEPT.PRIOR TO REINSPECTION.

SITE PLAN #	PROJECT NAME	DATE OF INIT. SITE PLAN APPROVAL	ENGINEER	DISTURBED AREA (AC)	CHANGE IN IMPERVIOUS AREA	REQUIRED TREATMENT	COMPLIANCE METHODS	NOTES

RESOURCE ORDINANCE COMPLIANCE
-FLOODPLAIN PROTECTION: PROJECT AREA IS 1350' FROM CLOSEST MAPPED FLOODPLAIN
-STEEP SLOPE PROTECTION: STEEP SLOPES EXIST ON SITE, BUT ARE NOT WITHIN THE PROJECT LIMITS.
-WETLANDS PROTECTION: NO WETLANDS ARE WITHIN PROJECT LIMITS.
-STREAM BUFFERS: STREAMS EXIST ON PROPERTY BUT NOT WITHIN PROJECT LIMITS.

SPECIAL CONDITIONS OF APPROVAL

PUBLIC WORKS CONDITIONS OF APPROVAL

1. ALL SIZES, MATERIALS, SLOPES, LOCATIONS, EXTENSIONS, AND DEPTHS FOR ALL PROPOSED UTILITIES (WATERLINES, SANITARY SEWER LINES AND STORM DRAINAGE CONVEYANCE SYSTEMS) SHALL BE REVIEWED AT CONSTRUCTION DRAWING SUBMITTAL AND SUBJECT TO APPROVAL BY THE CITY OF DURHAM PUBLIC WORKS DEPARTMENT BASED UPON THE DESIGN CRITERIA AND STANDARDS SET FORTH BY THE PUBLIC WORKS DEPARTMENT AND BE SUBJECT TO REVIEW AND APPROVAL BY THE PUBLIC WORKS DEPARTMENT AT CONSTRUCTION DRAWING SUBMITTAL.

2. THE DESIGNING PROFESSIONAL (A NCPE,NCPLS OR NCRLA - AS REQUIRED) WILL SUBMIT 3 SETS OF CONSTRUCTION DRAWINGS TO CITY ENGINEERING FOR REVIEW AND APPROVAL BEFORE STARTING CONSTRUCTION (SEE CONSTRUCTION PLAN APPROVAL PROCESS). NOTE THE APPROVAL OF CONSTRUCTION DRAWINGS IS SEPARATE FROM SITE PLAN APPROVAL. (IF APPLICABLE)

3.AS-BUILT DRAWINGS SHALL BE APPROVED PRIOR TO WATER METER AND SANITARY SEWER SERVICE CONNECTION INSTALLATIONS AND PRIOR ISSUANCE OF A CERTIFICATE OF OCCUPANCY.

4.WATER AND SEWER PERMITS NOT REQUIRED FOR THIS PROJECT.

5.BACKFLOW PREVENTER PERMIT NOT REQUIRED FOR PROJECT.

6. PROVIDE TWO (2) SETS OF APPROVED SITE PLAN DOCUMENTS TO ENGINEERING INSPECTIONS, 3RD FLOOR, 101 CITY HALL PLAZA, DURHAM, NC 27701 AT LEAST 5 DAYS PRIOR TO BEGINNING CONSTRUCTION. CONTACT ENGINEERING INSPECTIONS AT 560-4326 AT LEAST 48 HOURS PRIOR TO BEGINNING CONSTRUCTION.

GENERAL CONDITIONS OF APPROVAL

1. AT THE START OF GRADING INVOLVING THE LOWERING OF EXISTING GRADE AROUND A TREE OR STRIPPING OF TOPSOIL, A CLEAN, SHARP, VERTICAL CUT SHALL BE MADE AT THE EDGE OF THE TREE SAVE AREA PRIOR TO OR AT THE SAME TIME AS SILT FENCE AND OTHER EROSION CONTROL MEASURES ARE INSTALLED. THE TREE PROTECTION FENCING SHALL BE INSTALLED ON THE SIDE OF THE CUT FARTHEST AWAY FROM THE TREE TRUNK AND SHALL REMAIN IN PLACE UNTIL ALL CONSTRUCTION IN THE VICINITY OF THE TREES IS COMPLETE. NO STORAGE OR MATERIALS, FILL, OR EQUIPMENT AND NO TRESPASSING SHALL BE ALLOWED WITHIN THE BOUNDARY OF THE PROTECTED AREA. (IF APPLICABLE)

CASE # D1200333
APPROVAL BOX - FOR PLANNING DEPARTMENT USE

RECORD DRAWING 08/21/14

CH ENGINEERING
3220 GLEN ROYAL RD.
RALEIGH, NC 27617
TELE 919.788.0224
FAX 919.788.0232
etweed@CH-Engr.com
NC LICENSE #P-0189

No.	Submittal / Revision	Appr'd	By	Date
2	SIA Review Comment		emt	6-4-13
	FINAL DESIGN DRAWINGS			8-14-13

CITY OF DURHAM
GENERAL SERVICES
2011 FAY ST
DURHAM, NC 27704

NORTH CAROLINA PROFESSIONAL ENGINEER SEAL 028912 ERIC M. TWEED
8-21-14

UNAUTHORIZED ALTERATION OR ADDITION TO THIS DOCUMENT IS A VIOLATION OF APPLICABLE STATE AND/OR LOCAL LAWS

Drawing Copyright © 2012

CHA
8720 Red Oak Blvd. Suite 505 Charlotte, NC 28217-4938
Main: (704) 527-3227 • www.chacompanies.com
N.C. Engineering License: F-1165

Designed: EMT | Drawn: EMT | Checked: MAC

CITY OF DURHAM, NC
HOUSEHOLD HAZARDOUS WASTE
CUSTOMER DROP-OFF FACILITY

COVER SHEET

Issue Date: 08/21/14 | Project No.: 24451 | Scale: AS NOTED

C-001

File: Y:\CHA DURHAM\HHW\RECORD DRAWINGS\RD_BEGR.DGN
Saved: 8/22/2013 1:20:30 PM Plotted: #### User: #### LastSavedBy: etweed

DISTURBED AREA: 5825 SF
GENERATED BY FOUNDATION WORK, C&G REPLACEMENT & POLE RELOCATION.

NOTES

1. FOR LOCATION OF COLUMNS FOR SAW CUTTING, SEE PLAN SHEET S-101

2. CONTRACTOR TO VERIFY SLOPE ALONG CURB & GUTTER & NEIGHBORING AREA. REMOVE & REPLACE CURB & GUTTER AND CONCRETE TO ELIMINATE LOW AREAS AND PROVIDE POSITIVE DRAINAGE.

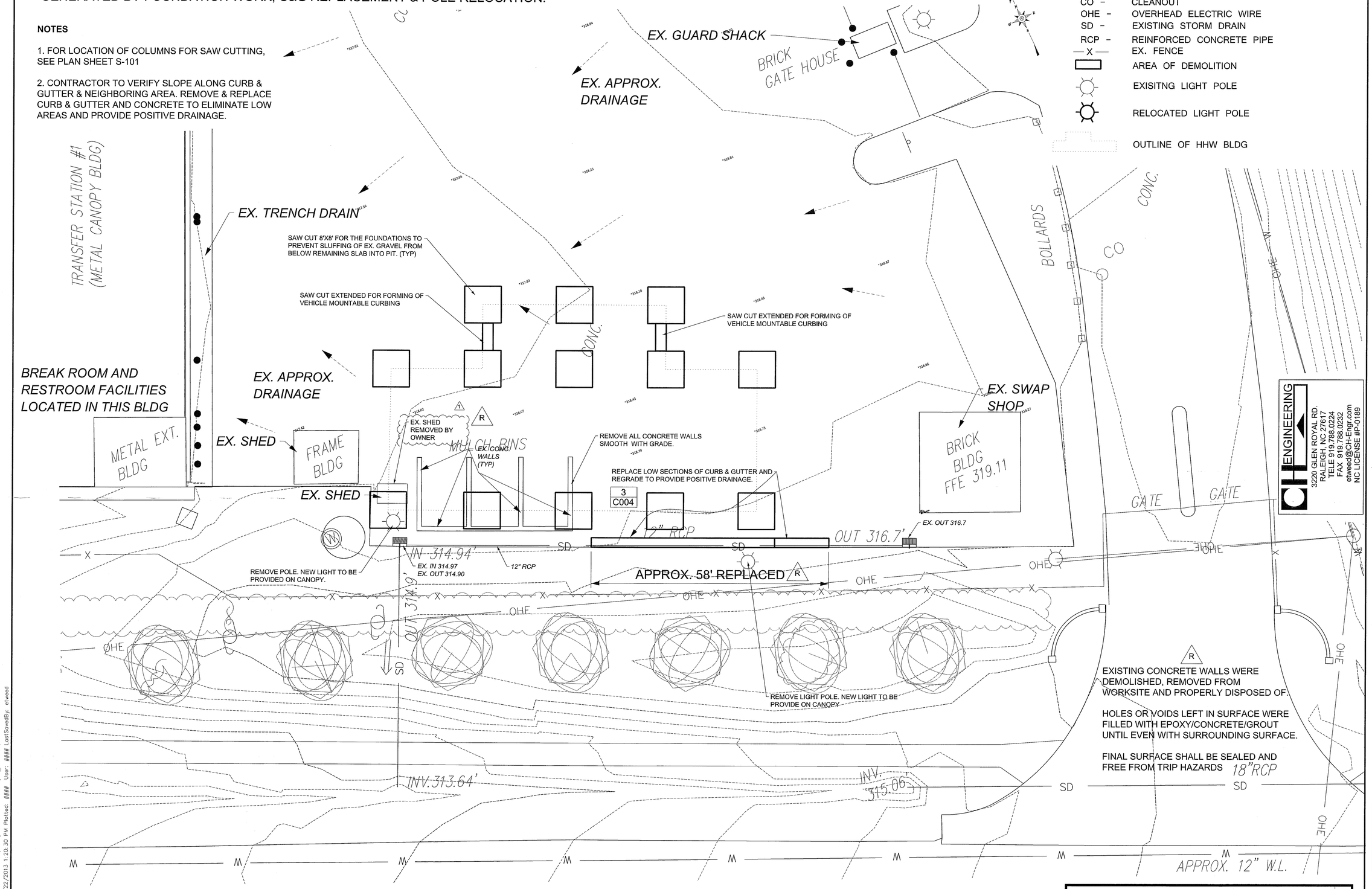

LEGEND

CO –	CLEANOUT
OHE –	OVERHEAD ELECTRIC WIRE
SD –	EXISTING STORM DRAIN
RCP –	REINFORCED CONCRETE PIPE
—X—	EX. FENCE
	AREA OF DEMOLITION
	EXISITNG LIGHT POLE
	RELOCATED LIGHT POLE
	OUTLINE OF HHW BLDG

RECORD DRAWING 08/21/14

No.	Submittal / Revision	App'd	By	Date
1	1ST SITE PLAN COMMENTS			4-17-13
	FINAL DESIGN PLANS			8-14-13
R	RECORD DRAWING NOTE			8-21-14

CITY OF DURHAM
GENERAL SERVICES
2011 FAY ST
DURHAM, NC 27704

CH ENGINEERING
3220 GLEN ROYAL RD.
RALEIGH, NC 27617
TELE 919.788.0224
FAX 919.788.0232
etweed@CH-Engr.com
NC LICENSE #P-0189

NORTH CAROLINA PROFESSIONAL SEAL 022912 ENGINEER ERIC M. TWEED
8-21-14
UNAUTHORIZED ALTERATION OR ADDITION TO THIS DOCUMENT IS IN VIOLATION OF APPLICABLE STATE AND/OR LOCAL LAWS

CHA
6720 Red Oak Blvd. Suite 505 Charlotte, NC 28217-4938
Main: (704) 527-3227 - www.chaconsultants.com
N.C. Engineering License: F-1165

Drawing Copyright © 2012

Designed: | Drawn: EMT | Checked: MAC

CITY OF DURHAM, NC
HOUSEHOLD HAZARDOUS WASTE
CUSTOMER DROP-OFF FACILITY

DEMOLITION PLAN
& EXISTING CONDITIONS

Issue Date: 08/21/14 | Project No.: 24451 | Scale: AS NOTED

C-002

File: Y:\CHA DURHAM\HHW\RECORD DRAWINGS\RD_BROR.DGN
Saved: 8/22/2013 1:20:30 PM Plotted: #### User: #### LastSavedBy: etweed

LEGEND

- CO – CLEANOUT
- OHE – OVERHEAD ELECTRIC WIRE
- SD – EXISTING STORM DRAIN
- RCP – REINFORCED CONCRETE PIPE
- —X— EX. FENCE
- AREA OF DEMOLITION
- EXISITNG LIGHT POLE
- RELOCATED LIGHT POLE

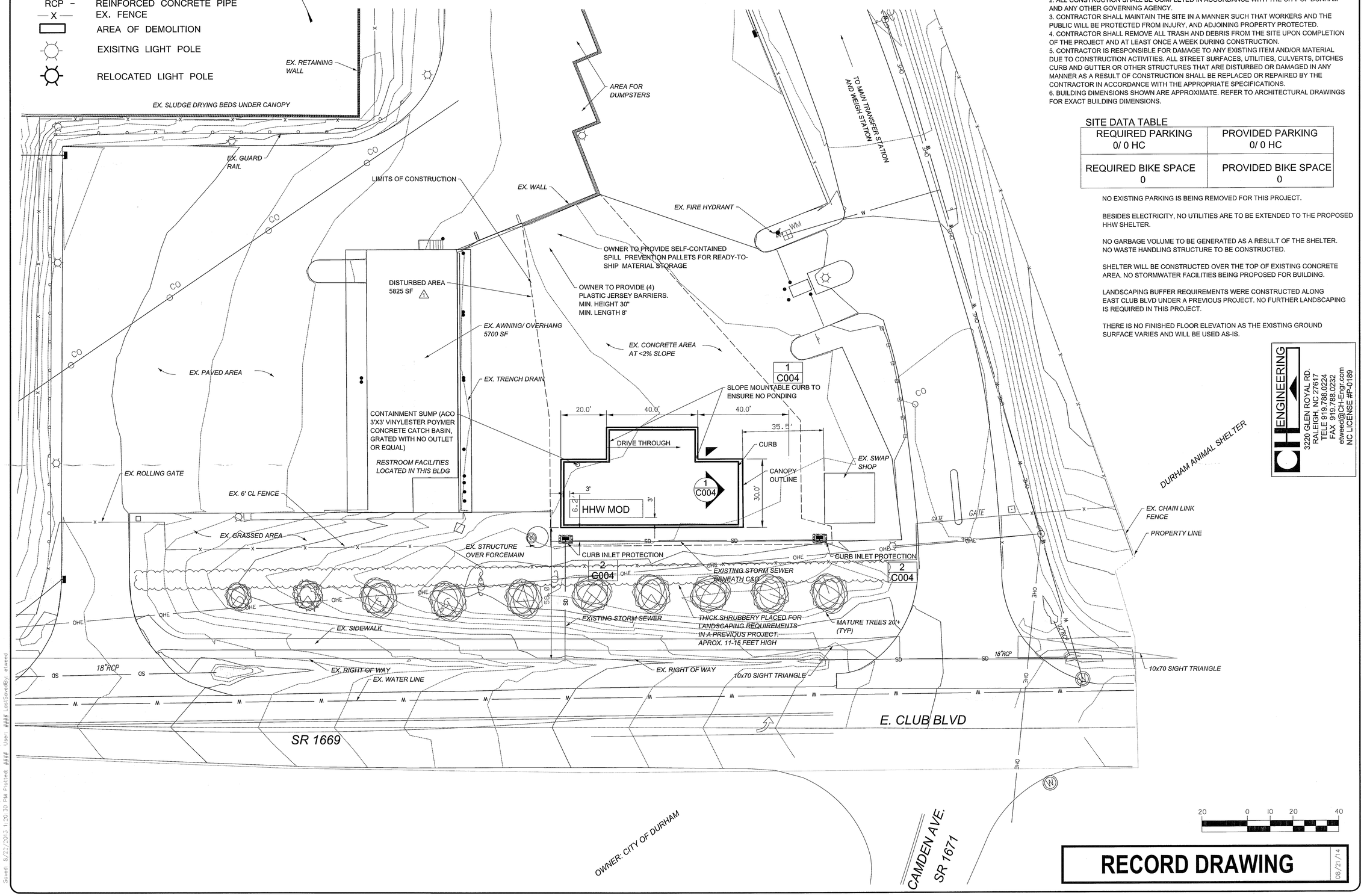

GENERAL SITE NOTES:

1. CONTRACTOR SHALL PUT INTO PLACE SUCH TEMPORARY EROSION CONTROL MEASURES AS INDICATED ON THE PLANS. THESE MEASURES SHALL BE INSPECTED AND EVALUATED DURING CONSTRUCTION FOR THEIR EFFECTIVENESS IN PREVENTING EROSION MATERIAL FROM DISCHARGING FROM THE WORK AREA. IF REQUIRED, OR AS DIRECTED BY INSPECTORS, ADDITIONAL TEMPORARY EROSION CONTROL MEASURES SHALL BE INSTALLED.
2. ALL CONSTRUCTION SHALL BE COMPLETED IN ACCORDANCE WITH THE CITY OF DURHAM AND ANY OTHER GOVERNING AGENCY.
3. CONTRACTOR SHALL MAINTAIN THE SITE IN A MANNER SUCH THAT WORKERS AND THE PUBLIC WILL BE PROTECTED FROM INJURY, AND ADJOINING PROPERTY PROTECTED.
4. CONTRACTOR SHALL REMOVE ALL TRASH AND DEBRIS FROM THE SITE UPON COMPLETION OF THE PROJECT AND AT LEAST ONCE A WEEK DURING CONSTRUCTION.
5. CONTRACTOR IS RESPONSIBLE FOR DAMAGE TO ANY EXISTING ITEM AND/OR MATERIAL DUE TO CONSTRUCTION ACTIVITIES. ALL STREET SURFACES, UTILITIES, CULVERTS, DITCHES CURB AND GUTTER OR OTHER STRUCTURES THAT ARE DISTURBED OR DAMAGED IN ANY MANNER AS A RESULT OF CONSTRUCTION SHALL BE REPLACED OR REPAIRED BY THE CONTRACTOR IN ACCORDANCE WITH THE APPROPRIATE SPECIFICATIONS.
6. BUILDING DIMENSIONS SHOWN ARE APPROXIMATE. REFER TO ARCHITECTURAL DRAWINGS FOR EXACT BUILDING DIMENSIONS.

SITE DATA TABLE

REQUIRED PARKING	PROVIDED PARKING
0/ 0 HC	0/ 0 HC
REQUIRED BIKE SPACE	PROVIDED BIKE SPACE
0	0

NO EXISTING PARKING IS BEING REMOVED FOR THIS PROJECT.

BESIDES ELECTRICITY, NO UTILITIES ARE TO BE EXTENDED TO THE PROPOSED HHW SHELTER.

NO GARBAGE VOLUME TO BE GENERATED AS A RESULT OF THE SHELTER. NO WASTE HANDLING STRUCTURE TO BE CONSTRUCTED.

SHELTER WILL BE CONSTRUCTED OVER THE TOP OF EXISTING CONCRETE AREA. NO STORMWATER FACILITIES BEING PROPOSED FOR BUILDING.

LANDSCAPING BUFFER REQUIREMENTS WERE CONSTRUCTED ALONG EAST CLUB BLVD UNDER A PREVIOUS PROJECT. NO FURTHER LANDSCAPING IS REQUIRED IN THIS PROJECT.

THERE IS NO FINISHED FLOOR ELEVATION AS THE EXISTING GROUND SURFACE VARIES AND WILL BE USED AS-IS.

RECORD DRAWING 08/21/14

CH ENGINEERING
3220 GLEN ROYAL RD.
RALEIGH, NC 27617
TELE 919.788.0224
FAX 919.788.0232
etweed@CH-Engr.com
NC LICENSE #P-0189

No.	Submittal / Revision	App'd	By	Date
1	1ST SITE PLAN COMMENTS			4-17-13
2	2ND SITE PLAN COMMENTS			6-4-13
	FINAL DESIGN DRAWINGS			8-14-13

CITY OF DURHAM
GENERAL SERVICES
2011 FAY ST
DURHAM, NC 27704

NORTH CAROLINA PROFESSIONAL ENGINEER SEAL 026912 ETWEED
8-21-14

UNAUTHORIZED ALTERATION OR ADDITION TO THIS DOCUMENT IS A VIOLATION OF PROVINCIAL STATE AND/OR LOCAL LAWS

CHA
8720 Red Oak Blvd, Suite 505 Charlotte, NC 28217-4938
Main: (704) 527-3227 - www.chacompanies.com
N.C. Engineering License: F-1165

Drawing Copyright © 2012

Designed: EMT | Drawn: EMT | Checked: MAC

CITY OF DURHAM, NC
HOUSEHOLD HAZARDOUS WASTE
CUSTOMER DROP-OFF FACILITY

SITE PLAN

Issue Date: 08/21/14 | Project No.: 24451 | Scale: AS NOTED

C-003

File: Y:\CHA DURHAM\HHW\RECORD DRAWINGS\RD_BROR.DGN
Saved: 8/22/2013 1:20:30 PM Plotted: #### User: #### LastSavedBy: etweed

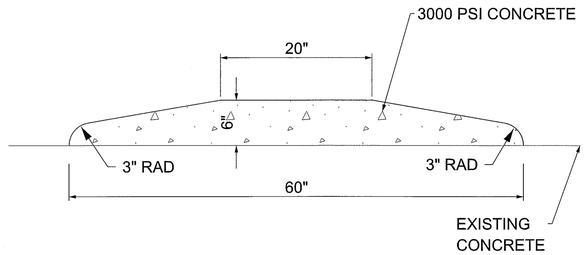

1 MOUNTABLE CONTAINMENT CURB
NO SCALE

4 COLUMN SITING DETAIL- SOUTH ROW
NO SCALE

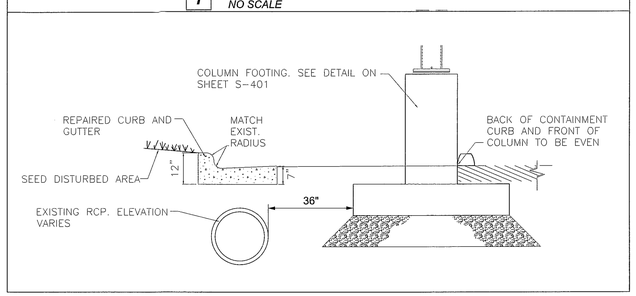

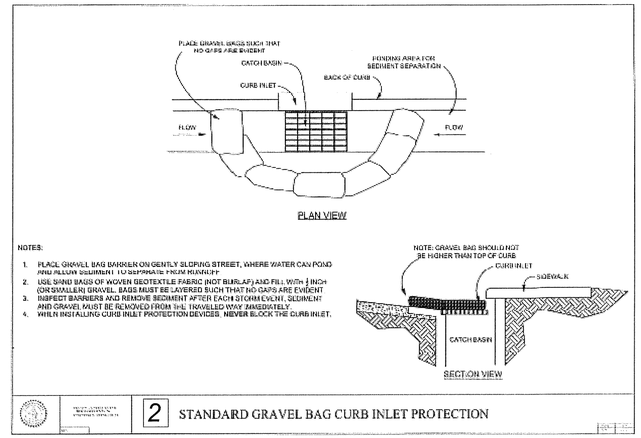

2 STANDARD GRAVEL BAG CURB INLET PROTECTION

LEGEND

DOT= DEPARTMENT OF TRANSPORTATION FLIP CHART PLACARD
NF= NATIONAL FIRE PROTECTION ASSOCIATION 704 SIGN
HDA= HOLD DOWN ANGLE (4)
S= SUMP
FP= FORKLIFT POCKETS
SGC= STATIC GROUND CONNECTOR
BO= BUILDING COLOR: BY OWNER
NV= NATURAL VENTILATION WITH FIRE DAMPER & RAIN LOUVRE (5)
D= 60"W x 84"H DOUBLE LEAF DOOR SYSTEM, 3 HR FIRE RATED (3)
PW= 2 HR BI-DIRECTIONAL PARTITION WALL (2)
DHO= DOOR HOLD OPEN ACTIVATED BY FUSIBLE LINK (3)
SW1= (NON-EXPLOSION PROOF) LIGHT SWITCH FOR 2 SMALL ROOMS (1)
SW2= (NON-EXPLOSION PROOF) LIGHT SWITCH FOR LARGE ROOM (1)
SW3= (NON-EXPLOSION PROOF) FAN SWITCH (1)
LC= LOAD CENTER, 240V 1Ø, 100A, 8 SPACE (1)
IL= (EXPLOSION PROOF) INCANDESCENT LIGHT FIXTURE (3)
MV= (EXPLOSION PROOF) MECHANICAL VENT (1)
DC= DRY CHEMICAL FIRE SUPPRESSION SYSTEM, 45 lb. TANK (1)
R= HEAVY DUTY ACCESS RAMP, 60"W x 88"L (SHIPPED LOOSE) (3)

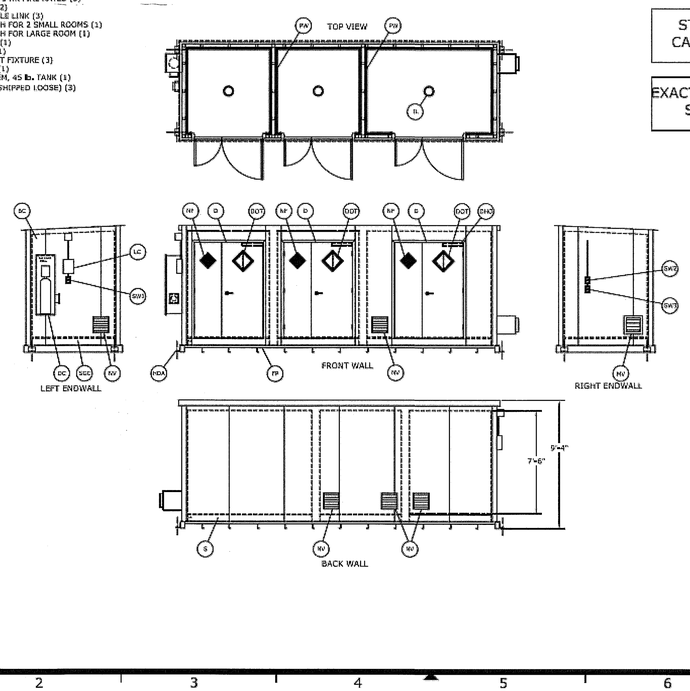

SUPPLY VOLTAGE
240V/1Ø/60hz

STATE OF NORTH CAROLINA PE SEAL

EXACT DIMENSIONS PER SPECIFICATION

CHANGE BY	REV	REVISIONS DRAWN BY	DATE	APPROVED

GENERAL NOTES:
1- ALL MATERIAL AND WORKMANSHIP SHALL CONFORM WITH THE REQUIREMENTS OF THE LATEST REVISION OF THE UBC, BNC AND STATE BUILDING CODES. DESIGN ACCORDING TO ASCE, ASD, AND WITH ANSI ASCE 7.
2- NO LOADS OTHER THAN THOSE GIVEN UNDER "DESIGN DATA" BELOW SHALL BE IMPOSED ON THE "STRUCTURE."
DESIGN DATA (MATERIALS)
STRUCTURAL QUALITY ASTM SPECIFICATION, A36 BARS
WELDED WIRE
DESIGN DATA IN ACCORDANCE WITH ANSI ASCE 7:

MINIMUM ROOF LIVE LOAD (PSF) = 40
Pg= GROUND SNOW LOAD (PSF) = 30
V = WIND VELOCITY (MPH) = 130
SEISMIC DESIGN CATEGORY = C

FOUNDATION NOTES:
THE FOUNDATION DRAWING IS A SUGGESTION ONLY. CHANGES MAY BE NECESSARY DUE TO LOCAL BUILDING REGULATIONS AND SITE CONDITIONS.
1- THE PAD PERIMETER SHOULD BE AT LEAST 24" LARGER THAN THE BUILDING, BOTH IN LENGTH AND WIDTH.
2- THE FOUNDATION SHOULD BE FORMED ON NATURAL UNDISTURBED SOIL CAPABLE OF SUSTAINING 2,000 PSF.
3- GRANULAR BASED GRAVEL OR CRUSHED STONE SHOULD BE COMPACTED TO A DEPTH OF 4". THE SLAB SHOULD CONSIST OF 6" THICK 2,500 PSI CONCRETE.
4- FINISH SURFACE SHOULD BE LEVEL AND THEN INSTALL 3/4" X 4" ANCHOR BOLTS INTO THE TIE DOWNS ATTACHED TO THE BUILDING CORNERS.

ALL DIMENSIONS SHOWN ON THIS PRINT ARE FOR YOUR REFERENCE, TOLERANCES ARE ±1" UNLESS OTHERWISE NOTED.

DATE: 8/12/13
DRAWN BY: TB

Customer is responsible to check with appropriate agencies to determine if any third party or local approvals are necessary.

This order does not include tax, anchoring, awning of dry chemical fire suppression system, electrical/water connections or permits.

This order is subject to US Chemical Storage LLC's terms and conditions which are located in your building manual which can be downloaded from www.uschemicalstorage.com/support/index.html

Buyer/End-user agrees to pay Seller the contract price for the completed goods, and Seller's full costs (including overhead) plus an additional twenty percent (20%) for incomplete goods cancelled less than thirty (30) days prior to the acknowledged shipping date.

Customer is responsible to determine the classification and set back of the storage building depending on the type and quantity of the chemicals being stored. Local Agency may require additional equipment to be added to ship unit after the plan review process. Additional equipment is not included in the quotation.

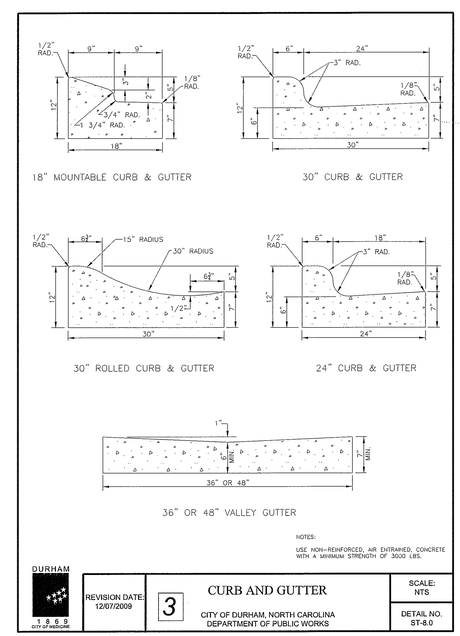

NOTES:
USE NON-REINFORCED, AIR ENTRAINED, CONCRETE WITH A MINIMUM STRENGTH OF 3000 LBS.

DURHAM 1869 CITY OF INNOVATION

REVISION DATE: 12/07/2009	3	CURB AND GUTTER CITY OF DURHAM, NORTH CAROLINA DEPARTMENT OF PUBLIC WORKS	SCALE: NTS DETAIL NO. ST-8.0

RECORD DRAWING 08/21/14

No.	Submittal / Revision	Appr'd	By	Date
	FINAL DESIGN DRAWINGS			8-14-13

CITY OF DURHAM
GENERAL SERVICES
2011 FAY ST
DURHAM, NC 27704

NORTH CAROLINA PROFESSIONAL SEAL 025912 ENGINEER ERIC M. TWEEDY
8-21-14
UNAUTHORIZED ALTERATION OR ADDITION TO THIS DOCUMENT IS A VIOLATION OF APPLICABLE STATE AND/OR LOCAL LAWS

Drawing Copyright © 2012
CLA
8720 Red Oak Blvd. Suite 505 Charlotte, NC 28217-4938
Main: (704) 527-3227 • www.clacompanies.com
N.C. Engineering License: F-1165
Designed: Drawn: Checked:

CITY OF DURHAM, NC
HOUSEHOLD HAZARDOUS WASTE
CUSTOMER DROP-OFF FACILITY

DETAILS

Issue Date: 08/21/14 Project No.: 24451 Scale: AS NOTED

C-004

File: \\CHA-DURHAM\HHW\RECORD DRAWINGS\RD_BRDR.DGN
Saved: 8/22/2013 1:40:30 PM Plotted: #### User: #### LastSavedBy: atward

GENERAL NOTES:

1. ALL DIMENSIONS TO AND OF EXISTING STRUCTURES SHALL BE VERIFIED IN FIELD BY CONTRACTOR AND ALL DISCREPANCIES SHALL BE REPORTED TO THE ENGINEER.

2. DO NOT CHANGE THE SIZE OR SPACING OF STRUCTURAL ELEMENTS WITHOUT THE APPROVAL OF THE ENGINEER.

3. DETAILS SHOWN ARE TYPICAL AND APPLY TO SIMILAR CONDITIONS UNLESS NOTED OTHERWISE.

4. THESE DRAWINGS DO NOT INCLUDE NECESSARY COMPONENTS FOR CONSTRUCTION SAFETY.

5. BRACE STRUCTURE AS REQUIRED FOR CONSTRUCTION AND WIND LOADS UNTIL ALL STRUCTURAL ELEMENTS NEEDED FOR STABILITY ARE INSTALLED. THESE ELEMENTS ARE AS FOLLOWS: ROOF DECK, BRACING MEMBERS, ETC.

6. THE DESIGN IS BASED ON THE 2012 NORTH CAROLINA BUILDING CODE.

7. CONTRACTOR SHALL DETERMINE EXACT LOCATION OF ALL EXISTING UTILITIES BEFORE COMMENCING WORK. HE/SHE AGREES TO BE FULLY RESPONSIBLE FOR ANY AND ALL DAMAGES WHICH MIGHT BE OCCASIONED BY HIS/HER FAILURE TO LOCATE AND PRESERVE ALL UNDERGROUND UTILITIES.

8. INCORRECTLY FABRICATED, DAMAGED, OR OTHERWISE MISFITTING OR NONCONFORMING MATERIALS OR CONDITIONS SHALL BE REPORTED TO THE OWNER'S REPRESENTATIVE PRIOR TO REMEDIAL OR CORRECTIVE ACTION. ANY SUCH ACTION SHALL REQUIRE PRE-APPROVAL BY THE ENGINEER.

9. EACH CONTRACTOR SHALL COOPERATE WITH THE OWNER'S REPRESENTATIVE AND COORDINATE HIS/HER WORK WITH THE WORK OF OTHERS.

10. VERIFY SIZE AND LOCATION OF OPENINGS PRIOR TO BEGINNING WORK. FOR DIMENSIONS NOT SHOWN, SEE ELECTRICAL AND CIVIL DRAWINGS.

FOUNDATION AND SOIL PREPARATION NOTES:

1. THE FOUNDATION DESIGN IS BASED ON AN ASSUMED ALLOWABLE SOIL BEARING PRESSURE OF 1,000 POUNDS PER SQUARE FOOT. BEARING STRATUM FOR FOOTINGS SHALL BE VERIFIED IN FIELD BY THE GEOTECHNICAL ENGINEER BEFORE PLACING CONCRETE FOOTINGS.

2. BOTTOM OF ALL FOOTINGS SHALL BE A MINIMUM OF 1'-0" BELOW FINAL FINISHED GRADE. ADJUST FOOTING ELEVATIONS AS REQUIRED TO MAINTAIN MINIMUM FROST COVER.

3. PROVIDE POSITIVE DRAINAGE FOR ALL TRENCHES DURING CONSTRUCTION. DO NOT ALLOW ANY PONDING OF WATER DURING CONSTRUCTION.

4. DO NOT PLACE FOOTINGS IN WATER OR ON FROZEN GROUND. DO NOT ALLOW GROUND BENEATH FOOTINGS TO FREEZE.

5. BEAR ALL FOOTINGS ON A BASE COURSE OF CLEAN, COMPACTED #57 CRUSHED STONE A MINIMUM OF 6" THICK UNDERLAIN BY STRUCTURAL FILL OR NATIVE UNDISTURBED SOIL AS APPROVED BY THE GEOTECHNICAL ENGINEER. SOIL BEARING SURFACES, PREVIOUSLY ACCEPTED BY OWNER'S REPRESENTATIVE, WHICH ARE ALLOWED TO BECOME SATURATED, FROZEN OR DISTURBED SHALL BE REWORKED TO SATISFACTION OF OWNER'S REPRESENTATIVE.

6. STRUCTURAL FILL AND SELECTED FILL: SOUND, DURABLE, SAND, GRAVEL, STONE, OR BLENDS OF THESE MATERIALS, FREE FROM ORGANIC, FROZEN OR OTHER DELETERIOUS MATERIALS, AND MEETING THE FOLLOWING GRADATION REQUIREMENTS:

SIEVE PERCENT	PASSING
4"	100
NO. 40	0 -70
NO. 200	0-10

   A. FINES PASSING NO. 200 SHALL BE NON-PLASTIC.
   B. PARTICLE SIZE ANALYSIS SHALL SHOW NO GAP GRADING.

7. THE SOIL BENEATH THE FOOTINGS SHALL BE TREATED AS FOLLOWS:
   A. PERFORM ALL CUT OPERATIONS.
   B. THE FILL REQUIRED TO RAISE THE BEARING SURFACE TO BENEATH THE FOOTINGS SHALL BE EITHER ON SITE FILL OR SELECT (STRUCTURAL) FILL. THE SELECT FILL SHALL HAVE A PLASTICITY INDEX BETWEEN 4 AND 12 AND A LIQUID LIMIT LESS THAN 40. PLACE ALL FILL (ON SITE OR SELECT) FILL IN 8-INCH LIFTS AND COMPACT TO AT LEAST 95% OF THE STANDARD PROCTOR DENSITY AT A MOISTURE CONTENT WITHIN -3 AND +3 PERCENTAGE POINTS OF OPTIMUM.
   C. ALL FOOTINGS SHALL BEAR ON A BASE COURSE OF CLEAN, COMPACTED CRUSHED STONE A MINIMUM OF 6" THICK.
   D. EACH LIFT SHALL BE TESTED FOR MOISTURE CONTENT AND IN PLACE DENSITY AT A RATE OF ONE TEST PER 3,000 SQUARE FEET (MINIMUM OF THREE PER LIFT).
8. SUBMITTALS:
   A. PRIOR TO DELIVERY OR USE OF ANY FILL MATERIAL, THE TESTING LABORATORY SHALL SUBMIT THE FOLLOWING REPORTS OF EACH MATERIAL:
      1. DESCRIPTION OF MATERIAL
      2. GRADATION ANALYSIS
      3. MODIFIED PROCTOR LABORATORY COMPACTION TESTS PER ASTM D1557.
   B. FIELD REPORTS OF IN PLACE SOIL DENSITY TESTS CALIBRATED FROM THE MODIFIED PROCTOR LABORATORY COMPACTION TEST.

CAST-IN-PLACE CONCRETE NOTES:

1. ALL CONCRETE SHALL HAVE A 28 DAY DESIGN COMPRESSIVE STRENGTH OF 4,000 PSI, A MINIMUM OF 564 POUNDS OF PORTLAND CEMENT PER CUBIC YARD, MID OR HIGH RANGE WATER REDUCING AGENT, AND A 4-6 INCH SLUMP. 20% OF CLASS F FLYASH MAY BE USED WITH THE APPROVAL OF THE ENGINEER AND THE CONCRETE FINISHER/CONTRACTOR BEFORE BIDDING. CONCRETE SHALL BE AIR ENTRAINED FOR MODERATE EXPOSURE PER ACI TABLE 4.2.1. TOLERANCE ON AIR CONTENT AS DELIVERED SHALL BE +/- 1.5 PERCENT.

2. CONCRETE SHALL HAVE A MAXIMUM WATER TO CEMENT RATIO AS FOLLOWS:
   1) 4,000 PSI CONCRETE - 0.46

3. PLACEMENT OF CONCRETE SHALL BE IN CONFORMANCE WITH ACI 117-06 "SPECIFICATION FOR TOLERANCE FOR CONCRETE AND MATERIALS AND COMMENTARY".

4. IF THE AIR TEMPERATURE IS GREATER THAN 90 DEGREES WITHIN 24 HOURS AFTER PLACEMENT, HOT WEATHER CONCRETE PROCEDURES SHALL BE USED. THE CONTRACTOR SHALL SUBMIT A PROCEDURE TO THE ENGINEER FOR APPROVAL. THESE PROCEDURES MAY INCLUDE THE FOLLOWING:
   A. PLACING THE CONCRETE IN THE EARLY MORNING HOURS
   B. THE USE OF EVAPORATION REDUCER (SEE BELOW)
   C. THE USE OF MISTING AS A CURING METHOD
   D. THE USE OF WET BLANKETS AS A CURING METHOD
   E. THE USE OF A RETARDING ADMIXTURE (NOT PREFERABLE)

5. FOUR 4"X8" CONCRETE CYLINDERS SHALL BE MADE FOR EVERY 50 CUBIC YARDS OR EACH DAY'S POUR, TO BE TESTED AT 7 DAYS, 28 DAYS, 28 DAYS AND ONE TO HOLD. THE CONCRETE SLUMP, TEMPERATURE, AND AIR CONTENT SHALL BE MEASURED EVERY TIME A SET OF FOUR CYLINDERS IS MADE.

6. ALL CONCRETE WORK SHALL BE IN ACCORDANCE WITH THE LATEST EDITIONS OF THE AMERICAN CONCRETE INSTITUTE STANDARDS "BUILDING CODE REQUIREMENTS FOR STRUCTURAL CONCRETE" (ACI 318) AND "SPECIFICATIONS FOR STRUCTURAL CONCRETE FOR BUILDINGS" (ACI 301). SPLICES IN REINFORCEMENT SHALL MEET CLASS B TENSION LAP REQUIREMENTS UNLESS NOTED OTHERWISE.

7. COVER FOR ALL REINFORCEMENT SHALL MEET THE COVERAGE REQUIREMENTS AS SHOWN IN THE LATEST ACI 318, OR AS SHOWN ON THE DETAILS. COVER DIMENSIONS SHOWN ON THE DETAILS CONTROL OVER ACI.

8. ANY CONCRETE TO BE PLACED FURTHER THAN 16 FEET FROM THE END OF A CONCRETE TRUCK SHALL BE PUMPED WITH A COMMERCIAL CONCRETE PUMPING TRUCK OR OTHER PLACEMENT METHOD APPROVED BY THE ENGINEER. THE CONCRETE TRUCK SHALL NOT BE ALLOWED TO DRIVE OVER THE SUBGRADE OR THE SLAB REINFORCEMENT.

9. REINFORCING STEEL SHALL BE DOMESTIC DEFORMED BILLET STEEL CONFORMING TO ASTM A-615 GRADE 60. #4 REINFORCEMENT BARS AND SMALLER SHALL BE COLD BENT WHENEVER BENDING IS REQUIRED IN THE FIELD. REINFORCEMENT GREATER THAN A #4 BAR MAY NOT BE BENT IN THE FIELD WITHOUT APPROVAL OF THE ENGINEER.

10. DOWEL CONCRETE PIERS INTO FOOTINGS WITH DOWELS THE SAME SIZE AND SPACING AS VERTICAL REINFORCEMENT. EXTEND DOWELS TO WITHIN 3" OF BOTTOM OF FOOTING, TERMINATED WITH ACI STD. 90 DEGREE HOOK, UNLESS NOTED OTHERWISE.

11. PROVIDE A ROUGH CONCRETE SURFACE (1/4" MINIMUM AMPLITUDE) AT THE INTERSECTION OF CONCRETE PIERS WITH THE TOP OF FOOTINGS. DO NOT PROVIDE A KEYWAY UNLESS SHOWN OR NOTED ON THE DRAWINGS

12. PROVIDE 3/4" X 3/4" CHAMFER AT ALL EXPOSED CORNERS UNLESS NOTED OTHERWISE.

13. CAST CONCRETE ON SLOPED SURFACES BEGINNING AT LOWEST ELEVATION AND CONTINUING MONOLITHICALLY TOWARD HIGHER ELEVATIONS UNTIL INTENDED POUR IS COMPLETED.

14. REINFORCING BARS, BAR SUPPORTS, AND SPACERS SHALL BE DETAILED AND PROVIDED IN ACCORDANCE WITH THE LATEST ACI DETAILING MANUAL. USE WIRE-BAR SUPPORTS COMPLYING WITH CRSI SPECIFICATONS. SUPPORTS SHALL NOT BE PLACED FURTHER THAN 4 FEET APART.
   A. USE SUPPORTS WITH SAND PLATES OR HORIZONTAL RUNNERS WHERE BASE MATERIAL WILL NOT SUPPORT CHAIR LEGS. CONCRETE BLOCK OR CLAY MASONRY MAY NOT BE USED.

15. SEE CIVIL DRAWINGS FOR EXACT LOCATIONS AND DETAILS OF CURBS.

16. ADHESIVE ANCHORS WITH REBAR SHALL BE AS NOTED BELOW. INSTALL ACCORDING TO THE MANUFACTURER'S RECOMMENDATIONS, WHICH INCLUDES CLEANING THE HOLE WITH AIR AND USING A MANUFACTURER APPROVED DISPENSING TOOL WITH MIXING NOZZLE.
   A. INTO CONCRETE: HILTI HIT 150 MAX, SIMPSON SET HIGH STRENGTH EPOXY-TIE ANCHORING ADHESIVE OR APPROVED EQUAL.

17. NO PIPING OR CONDUITS SHALL BE INSTALLED IN ANY CONCRETE WITHOUT THE APPROVAL OF THE ENGINEER.

18. WATERSTOPS SHALL BE HYDROTITE CJ-1020-2K BY GREENSTREAK GROUP, INC, OR APPROVED EQUAL. SEE SECTIONS FOR LOCATIONS.

19. ALL DOWELS, ANCHOR BOLTS, WATERSTOPS, AND ALL OTHER EMBEDDED ITEMS AND FORMED DETAILS SHALL BE IN PLACE BEFORE START OF CONCRETE PLACEMENT. FOR EMBEDDED ITEMS AND REQUIRED DETAILS, SEE CIVIL DRAWINGS. VERIFY SIZE AND LOCATION OF ALL OPENINGS.

20. SEALANT FOR ISOLATION JOINTS SHALL BE SIKAFLEX 1A, BY SIKA CORP. OR APPROVED EQUAL.

21. SUBMITTALS:
   A. PRODUCT DATA FOR PROPRIETARY MATERIALS AND ITEMS, INCLUDING REINFORCEMENT AND FORMING ACCESSORIES, ADMIXTURES, PATCHING COMPOUNDS, FLY ASH, AND OTHERS AS REQUESTED BY ENGINEER.
   B. SHOP DRAWINGS FOR FABRICATION, BENDING AND PLACEMENT FOR CONCRETE REINFORCEMENT COMPLYING WITH THE LATEST EDITION OF THE ACI DETAILING MANUAL. DUPLICATION OF CONTRACT DRAWINGS FOR SHOP DRAWINGS IS NOT PERMITTED.
   C. LABORATORY TEST REPORTS FOR CONCRETE MATERIALS AND MIX DESIGN TESTS. TEST REPORTS SHALL BE LESS THAN 12 MONTHS OLD.

STEEL NOTES:

1. STRUCTURAL STEEL FABRICATION AND ERECTION SHALL CONFORM TO THE AISC MANUAL OF STEEL CONSTRUCTION.

2. WELDED CONNECTIONS SHALL CONFORM TO THE LATEST REVISED CODE OF THE AMERICAN WELDING SOCIETY.

3. ANY CONNECTIONS WITHOUT WELD SYMBOLS SHALL BE AT A MINIMUM WELDED ALL AROUND WITH THE MINIMUM FILLET OR BUTT WELD SIZE.

4. STRUCTURAL STEEL ANGLES, PLATES, ETC. SHALL CONFORM TO ASTM A36 REQUIREMENTS (36 KSI). STRUCTURAL STEEL W SHAPES SHALL CONFORM TO ASTM A992 (50 KSI). STRUCTURAL TUBING AND PIPES SHALL CONFORM TO THE ASTM A500 GRADE B REQUIREMENTS (46 KSI). ANCHOR RODS SHALL CONFORM TO ASTM F1554 GRADE 36.

5. DO NOT PLACE HOLES THROUGH STRUCTURAL STEEL MEMBERS EXCEPT AS SHOWN AND DETAILED ON STRUCTURAL DRAWINGS.

6. CONNECTIONS:
   A. ALL BOLTED CONNECTIONS ARE TO BE 3/4" MINIMUM DIAMETER A325 TYPE N OR SC BOLTS IN STANDARD HOLES UNLESS NOTED OTHERWISE OR AS DETERMINED BY THE CONNECTION DESIGNER OR NOTED ON THE PLANS. DESIGN USING STANDARD HOLES UNLESS OTHERWISE NOTED OR REQUIRED FOR ERECTION.
   B. MINIMUM CAPACITY OF BEAM CONNECTIONS: FOR CONNECTIONS NOT DETAILED, PROVIDE CONNECTION CAPACITY OF AT LEAST THAT REQUIRED BY PART 3 OF THE AISC MANUAL IN THE SECTION "MAXIMUM TOTAL UNIFORM LOAD TABLES" FOR LRFD DESIGN OR "ALLOWABLE LOADS ON BEAMS" FOR ALLOWABLE STRESS DESIGN, FOR THE GIVEN MEMBER AND STEEL SPECIFICATIONS. CONCENTRATED LOADS NEAR SUPPORTS MUST BE ADDED.
   C. THE DESIGN SHEAR FOR EACH CONNECTION UNLESS NOTED ON THE DRAWINGS SHALL BE 110% OF THE REACTION FROM A UNIFORM LOAD OVER THE SPAN WHICH CREATES THE MAXIMUM DESIGN MOMENT FOR ROOF BEAM CONNECTIONS. THE MINIMUM REACTION SHALL BE 14 KIPS.
   D. INDICATOR BOLTS EQUAL TO TENSION FOR CONTROL BOLTS OF THE LEJEUNE COMPANY OF MINNEAPOLIS, MINNESOTA (800-872-2658) SHALL BE USED.
   E. CONNECTION DESIGN BY FABRICATOR WILL BE SUBJECT TO REVIEW AND APPROVAL BY ENGINEER. USE MINIMUM OF TWO 3/4" DIAMETER A325 BOLTS PER CONNECTION.

7. FRAME ALL OPENINGS IN ROOF DECK 8" OR LARGER WITH A STRUCTURAL STEEL MEMBER ON ALL SIDES EXCEPT WHERE A SIDE MAY BE WITHIN 1'-0" OF ANOTHER FRAMING MEMBER. FRAMING NOT REQUIRED FOR ROOF OPENINGS SMALLER THAN 8".

8. PAINT ALL STRUCTURAL STEEL WITH A THREE COAT SYSTEM (TWO-COMPONENT ZINC PRIMER, HI-BUILD EPOXY, AND POLYURETHANE FINISH COAT). THE PAINT SYSTEM SHALL BE BY TNEMEC, INC OR APPROVED EQUAL AND SHALL BE APPLIED ACCORDING TO MANUFACTURER'S WRITTEN RECOMMENDATIONS AND AS SPECIFIED BELOW. COLOR TO BE SELECTED BY OWNER.
   A. SURFACE PREPARATION SHALL BE COMPLETED IN SHOP IN ACCORDANCE WITH SSPC SP-6 COMMERCIAL BLAST CLEANING. REMOVE ALL BLASTING RESIDUE. ALL SURFACES SHALL BE CLEAN AND DRY.
   B. PRIMER SHALL BE APPLIED IN SHOP USING SERIES 90-97 TNEME-ZINC AT 2.5-3.5 MILS DFT.
   C. FIELD SPOT TOUCH-UPS: PREPARE ALL RUSTED AND ABRADED AREAS IN ACCORDANCE WITH SSPC SP-11. TOUCH-UP PRIMER COAT AT 2.5-3.5 MILS DFT.
   D. INTERMEDIATE COAT SHALL BE APPLIED IN FIELD USING TNEMEC SERIES N69-COLOR HI-BUILD EPOXOLINE II AT 2.0-3.0 MILS DFT.
   E. FINISH COAT SHALL BE APPLIED IN FIELD USING TNEMEC SERIES 1075U-COLOR ENDURA-SHIELD II AT 2.0-3.0 MILS DFT.

9. SUBMITTALS:
   A. PRODUCT DATA OR MANUFACTURER'S SPECIFICATIONS AND INSTALLATION INSTRUCTIONS FOR THE FOLLOWING PRODUCTS. INCLUDE LABORATORY TEST REPORTS AND OTHER DATA TO SHOW COMPLIANCE WITH SPECIFICATIONS.
      1. STRUCTURAL STEEL INCLUDING CERTIFIED COPIES OF MILL REPORTS COVERING CHEMICAL AND PHYSICAL PROPERTIES.
      2. HIGH STRENGTH BOLTS (EACH TYPE), INCLUDING NUTS AND WASHERS; FOR INFORMATION ONLY.
      3. SHRINKAGE RESISTING GROUT.
      4. STRUCTURAL STEEL PRIMER PAINT.
      5. PAINT SYSTEM.
   B. SHOP DRAWINGS PREPARED UNDER SUPERVISION OF A LICENSED STRUCTURAL ENGINEER, INCLUDING COMPLETE DETAILS AND SCHEDULES FOR FABRICATION AND ASSEMBLY. DUPLICATION OF CONTRACT DRAWINGS FOR SHOP DRAWINGS IS NOT PERMITTED.

ROOF DECK NOTES:

1. ROOF DECK SHALL BE 1", NARROW RIB TYPE E, 20 GAGE AS SPECIFIED BY THE STEEL DECK INSTITUTE AND SHALL BE GALVANIZED. FASTEN ROOF DECK TO STEEL SUPOPRTING MEMBERS BY #12 GALVANIZED TEK SCREWS WITH NEOPRENE WASHERS, SPACED NOT MORE THAN 12 INCHES AT EVERY SUPPORT. IN ADDITION, SECURE DECK TO EACH SUPPORTING MEMBER IN RIBS WHERE SIDELAPS OCCUR. SIDELAP SCREWS SHALL BE #10 OR LARGER GALVANIZED TEK SCREWS WITH NEOPRENE WASHERS. MECHANICALLY FASTEN SIDELAPS OF ADJACENT DECK UNITS BETWEEN SUPPORTS AT INTERVALS NOT EXCEEDING 30 INCHES ON CENTER. MINIMUM OF (1) FASTENER PER SPAN.

2. PROVIDE L3X3X1/4 AROUND ALL ROOF PENETRATIONS NOT SHOWN, 8 INCHES OR GREATER, FOR METAL DECK SUPPORT.

3. VERIFY SIZE, LOCATION, AND NUMBER OF ROOF OPENINGS WITH ELECTRICAL PLANS AND CONTRACTORS.

4. SUBMITTALS:
   A. PRODUCT DATA AND INSTALLATION INSTRUCTIONS FOR EACH TYPE OF DECKING AND ACCESSORIES.
   B. SHOP DRAWINGS SHOWING LAYOUT AND TYPES OF DECK UNITS, ANCHORAGE DETAILS AND CONDITIONS REQUIRING CLOSURE STRIPS AND OTHER ACCESSORIES. DUPLICATION OF CONTRACT DRAWINGS FOR SHOP DRAWINGS IS NOT PERMITTED.

DESIGN LOADS:

THE FOLLOWING DESIGN LOADS WERE USED FOR THIS BUILDING:

BUILDING OCCUPANCY CATEGORY: II

ROOF DEAD LOADS:	1 1/2" METAL DECK	2 PSF
	STRUCTURAL STEEL	6 PSF
	MEP	5 PSF
	TOTAL	13 PSF

ROOF LIVE LOAD: 20 PSF

ROOF SNOW LOAD:
GROUND SNOW LOAD: 15 PSF
FLAT-ROOF SNOW LOAD: 15 PSF
SNOW EXPOSURE FACTOR: 0.9
SNOW LOAD IMPORTANCE FACTOR: 1.0
THERMAL FACTOR: 1.2

WIND DESIGN DATA:
BASIC WIND SPEED (3 SECOND GUST): 90 MPH
WIND IMPORTANCE FACTOR: 1.0
WIND EXPOSURE CATEGORY: B
INTERNAL PRESSURE COEFFICIENTS: 0
ALL NEW COMPONENTS AND CLADDING NOT DESIGNED BY THE ENGINEER SHALL BE DESIGNED FOR 25 PSF UNLESS OTHERWISE APPROVED BY THE ENGINEER.

EARTHQUAKE DESIGN DATA:
SEISMIC IMPORTANCE FACTOR: 1.0
MAPPED SPECTRAL RESPONSE ACCELERATIONS: SS=0.1952 S1=0.0767
SITE CLASS: D
SEISMIC DESIGN CATEGORY: B
BASIC SEISMIC-FORCE-RESISTING SYSTEM: STEEL SYSTEMS NOT SPECIFICALLY DETAILED FOR SEISMIC RESISTANCE
DESIGN BASE SHEAR: 4.5 KIPS
SEISMIC RESPONSE COEFFICIENT: CS=0.0694
RESPONSE MODIFICATION FACTOR: R=3.0
ANALYSIS PROCEDURE USED: EQUIVALENT LATERAL FORCE METHOD

VERIFICATION/INSPECTION	CONTINUOUS OBSERVATION	PERIODIC OBSERVATION
SCHEDULE OF SPECIAL INSPECTION - SOILS AND FOUNDATIONS		
1. SOILS		
a. VERIFY MATERIALS BELOW SHALLOW FOUNDATIONS ARE ADEQUATE TO ACHIEVE THE DESIGN BEARING CAPACITY.	-	X
b. VERIFY EXCAVATIONS ARE EXTENDED TO PROPER DEPTH AND HAVE REACHED PROPER MATERIAL.	-	X
c. PERFORM CLASSIFICATION AND TESTING OF COMPACTED FILL MATERIALS.	X	-
d. VERIFY USE OF PROPER MATERIALS, DENSITIES AND LIFT THICKNESSES DURING PLACEMENT AND COMPACTION OF FILL.	-	X
e. PRIOR TO PLACEMENT OF COMPACTED FILL, OBSERVE SUBGRADE AND VERIFY THAT SITE HAS BEEN PROPERLY PREPARED.	-	X
2. COMPACTION TESTING: ONE TEST FOR EACH SPREAD FOOTING AND FOR EACH 2,000 SF OF BUILDING AREA.	-	X
3. MOISTURE CONTENT TESTING OF SLAB SUBBASE. ONE TEST FOR EACH 2,000 SF OF BUILDING AREA. MINIMUM OF FOUR TESTS PER AREA.	-	X
SCHEDULE OF SPECIAL INSPECTION - CONCRETE		
1. INSPECTION OF REINFORCING STEEL AND PLACEMENT FOR GENERAL CONFORMANCE BEFORE EVERY POUR.		
a. FOOTINGS.	-	X
b. SLABS ON GRADE.	-	X
2. INSPECTION OF ANCHOR BOLTS TO BE INSTALLED IN CONCRETE PRIOR TO AND DURING PLACEMENT OF CONCRETE.	X	-
3. VERIFYING USE OF REQUIRED DESIGN MIX, ALL SAMPLED TRUCKS BEFORE THEY ARE POURED.	-	X
4. SAMPLING FRESH CONCRETE AND PERFORMING SLUMP, AIR CONTENT, AND DETERMINING THE TEMPERATURE OF FRESH CONCRETE AT THE TIME OF MAKING	-	X
5. INSPECTION OF CONCRETE PLACEMENT FOR PROPER APPLICATION TECHNIQUES.	X	-
6. INSPECTION FOR MAINTENANCE OF SPECIFIED CURING TEMPERATURE AND TECHNIQUES.	-	X
7. INSPECT FORMWORK FOR SHAPE, LOCATION, AND DIMENSIONS OF THE CONCRETE MEMBER BEING FORMED. INSPECT FOR GENERAL CONFORMANCE BEFORE EVERY POUR.	-	X
SCHEDULE OF SPECIAL INSPECTION - STRUCTURAL STEEL		
1. VERIFY THAT FABRICATOR(S) MAINTAINS DETAILED FABRICATION AND QUALITY CONTROL PROCEDURES. REVIEW PROCEDURES FOR COMPLETENESS AND ADEQUACY RELATIVE TO THE CODE REQUIREMENTS FOR THE FABRICATOR'S SCOPE OF WORK.	-	X
2. MATERIAL VERIFICATION OF HIGH-STRENGTH BOLTS, NUTS, AND WASHERS:		
a. IDENTIFICATION MARKINGS TO CONFORM TO ASTM STANDARDS SPECIFIED.	-	X
b. MANUFACTURER'S CERTIFICATE OF COMPLAINCE REQUIRED.	-	X
3. INSPECTION OF HIGH-STRENGTH BOLTING:		
a. BEARING TYPE CONNECTIONS	-	X
4. MATERIAL VERIFICATION OF STRUCTURAL STEEL AND COLD-FORMED DECK:		
a. FOR STRUCTURAL STEEL, IDENTIFICATION MARKINGS TO CONFORM TO AISC 360.	-	X
b. FOR OTHER STEEL, IDENTIRICATION MARKINGS TO CONFORM TO ASTM STANDARDS SPECIFIED.	-	X
c. MANUFACTURER'S CERTIFIED MILL TEST REPORTS REQUIRED.	-	X
5. MATERIAL VERIFICATION OF WELD FILLER MATERIALS:		
a. IDENTIFICATION MARKINGS TO CONFORM TO AWS SPECIFICATION.	-	X
b. MANUFACTURER'S CERTIFICATE OF COMPLIANCE REQUIRED.	-	X
6. INSPECTION OF WELDING OF STRUCTURAL STEEL AND COLD-FORMED STEEL DECK:		
a. SINGLE-PASS DECK WELDS <5/16"	-	X
b. ROOF DECK WELDS	-	X
7. INSPECTION OF STEEL FRAME JOINT DETAILS FOR COMPLIANCE:		
a. DETAILS SUCH AS BRACING AND STIFFENING.	-	X
b. MEMBER LOCATIONS.	-	X
c. APPLICATION OF JOINT DETAILS AT EACH CONNECTION.	-	X
8. INSPECT CONDITION OF ERECTED MATERIALS.	-	X
9. VERIFY COLUMN PLUMBNESS.	-	X

OBSERVATION PROGRAM NOTES:

1. CONTRACTOR SHALL PAY FOR ALL TESTING PRIOR TO CONSTRUCTION TO VERIFY MATERIALS MEET SPECIFIED REQUIREMENTS.
2. OWNER SHALL ENGAGE AND PAY FOR THE SERVICES OF THE REGISTERED DESIGN PROFESSIONAL, SPECIAL INSPECTOR, AGENTS OF THE SPECIAL INSPECTOR, AND TESTING LABORATORY FOR ALL TESTING DURING CONSTRUCTION.
3. CONTRACTOR SHALL BE RESPONSIBLE FOR THE COST OF ANY RE-TESTING OR RE-INSPECTION OF WORK, WHICH FAILS TO COMPLY WITH THE REQUIREMENTS.
4. DUTY OF THE BUILDING OFFICIAL: PER THE 2009 IBC, IT IS THE RESPONSIBILITY OF THE BUILDING OFFICIAL TO REVIEW THIS PROGRAM FOR CONFORMANCE WITH THE BUILDING CODE AND NOTIFY THE DESIGN PROFESSIONAL IN RESPONSIBLE CHARGE, BEFORE ISSUING A BUILDING PERMIT, IF ANY ADDITIONAL OBSERVATIONS WILL BE REQUIRED.
5. DUTIES OF THE CONTRACTOR INCLUDE:
   a. COORDINATE AND COOPERATE WITH THE SPECIAL INSPECTOR.
   b. SCHEDULE INSPECTIONS AND TESTS AND NOTIFY THE SPECIAL INSPECTOR WHEN WORK IS READY FOR EACH OBSERVATION.
   c. MAKE ALL WORK ACCESSIBLE FOR OBSERVATION.
   d. KEEP A COPY OF ALL PLANS AND APPROVED SUBMITTALS ON THE SITE.
   e. NOTIFY THE SPECIAL INSPECTOR WHEN THE PROJECT HAS BEEN COMPLETED AND REQUEST A FINAL REPORT FROM THE LAB.
6. DUTIES OF THE SPECIAL INSPECTOR INCLUDE:
   a. TECHNICIANS SHALL ONLY PERFORM OBSERVATIONS THEY ARE QUALIFIED TO
   b. NOTIFY THE ENGINEER IF DEVIATIONS FROM THE PLANS ARE OBSERVED WHEN IT APPEARS THEY WILL NOT BE CORRECTED.
   c. FURNISH REPORTS FOR EACH OBSERVATION TO THE BUILDNIG OFFICIAL, ENGINEER, AND CONTRACTOR.
   d. SUBMIT A FINAL REPORT STATING ALL REQUIRED OBSERVATIONS HAVE BEEN MADE AND REPORTED.

No.	Submittal / Revision	Appr'd	By	Date
1	FINAL DESIGN DRAWINGS	RCS	GTS	3-7-14
2	ISSUE FOR BID	RCS	CTB	3-24-14
3	RECORD SET	RCS	MCF	8-21-14

CITY OF DURHAM, NC

UNAUTHORIZED ALTERATION OR ADDITION TO THIS DOCUMENT IS A VIOLATION OF APPLICABLE STATE AND LOCAL LAWS

Drawing Copyright © 2012

CHA
8720 Red Oak Boulevard, Suite 505 • Charlotte, NC 28217-4938
Main: (704) 527-3227 • www.chacompanies.com
N.C. Engineering License: F-1165

Designed: EAB | Drawn: CEC | Checked: CJJ

HOUSEHOLD HAZARDOUS WASTE CUSTOMER DROP-OFF FACILITY

GENERAL NOTES AND DESIGN DATA

Issue Date: 03/7/14 | Project No.: 24451 | Scale: AS NOTED

S-001

File: V:\PROJECTS\CHNC\24451\CADD_ACAD\S001-24451.DWG User: Farone, Michael LastSavedBy: 4193
Saved: 8/21/2014 8:30:05 AM Plotted: 8/21/2014 2:58:52 PM

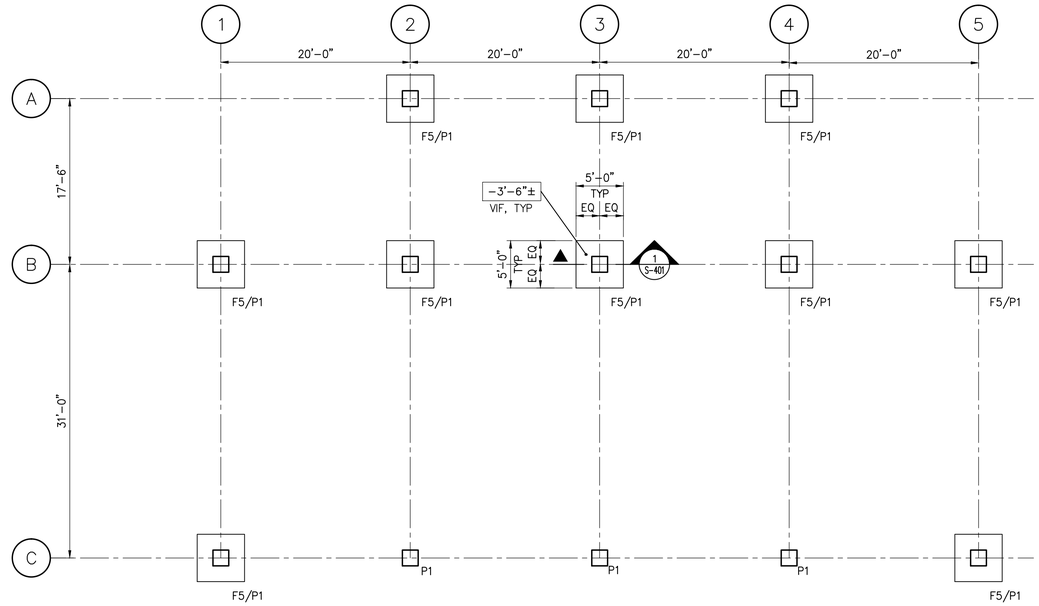

NOTES:
1. ELEVATION 321.5' = REFERENCE ELEVATION = 0'-0"
2. X'-X" DENOTES TOP OF FOOTING ELEVATION ± FROM REFERENCE ELEVATION. TOP OF FOOTING ELEVATIONS VARY. TOP OF FOOTING ELEVATIONS SHALL BE 8" BELOW TOP OF FINISHED CONCRETE PAVEMENT, TYP.
3. "FX/PX" DENOTES FOOTING AND PIER DESIGNATION, RESPECTIVELY. SEE S-401 FOR SCHEDULES

FOUNDATION PLAN
SCALE: 1/8"=1'-0"

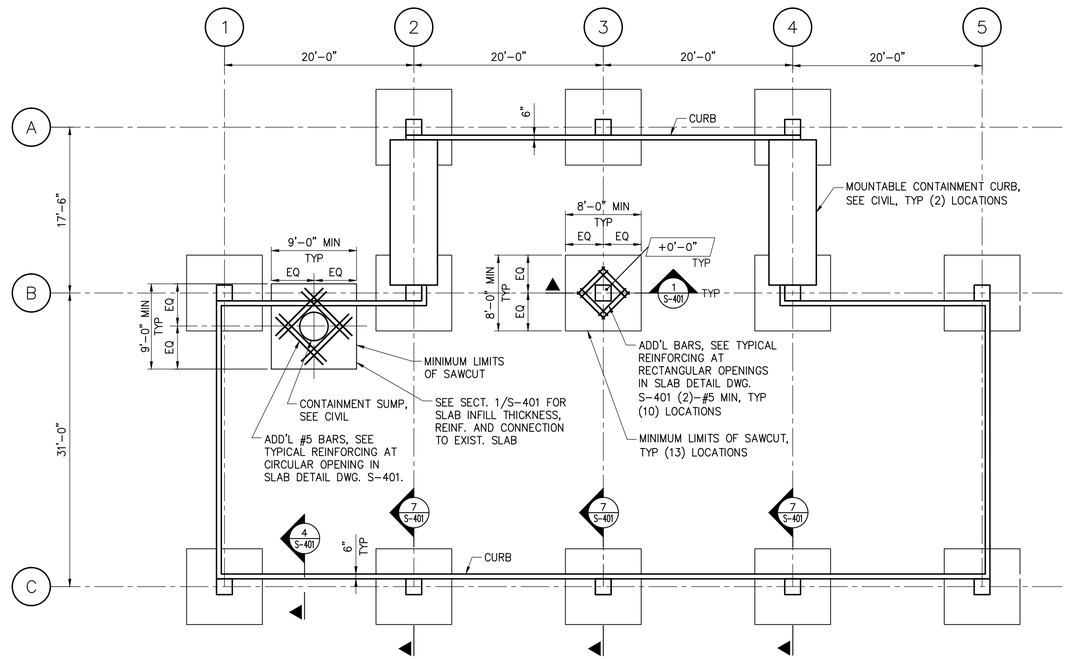

NOTES:
1. ELEVATION 321.5' = REFERENCE ELEVATION = 0'-0"
2. ±X'-X" DENOTES TOP OF PIER ELEVATION ± FROM REFERENCE ELEVATION.

SLAB AND CURB PLAN
SCALE: 1/8"=1'-0"

No.	Submittal / Revision	Appr'd	By	Date
1	FINAL DESIGN DRAWINGS	RCS	GTS	3-7-14
2	ISSUE FOR BID	RCS	CTB	3-24-14
3	RECORD SET	RCS	MCF	8-21-14

CITY OF DURHAM, NC

UNAUTHORIZED ALTERATION OR ADDITION TO THIS DOCUMENT IS A VIOLATION OF APPLICABLE STATE AND/OR LOCAL LAWS.

Drawing Copyright © 2012

CHA
8720 Red Oak Boulevard, Suite 505 • Charlotte, NC 28217-4938
Main: (704) 527-3227 • www.chacompanies.com
N.C. Engineering License: F-1165

Designed: EAB | Drawn: CEC | Checked: CJJ

HOUSEHOLD HAZARDOUS WASTE
CUSTOMER DROP-OFF FACILITY

FOUNDATION, SLAB AND CURB PLAN

Issue Date: 03/7/14 | Project No.: 24451 | Scale: AS NOTED

S-101

File: V:\PROJECTS\CHNC\24451\CADD_ACAD\S101-24451.DWG
Saved: 8/21/2014 1:45:15 PM Plotted: 8/21/2014 1:45:57 PM User: Farone, Michael LastSavedBy: 4193

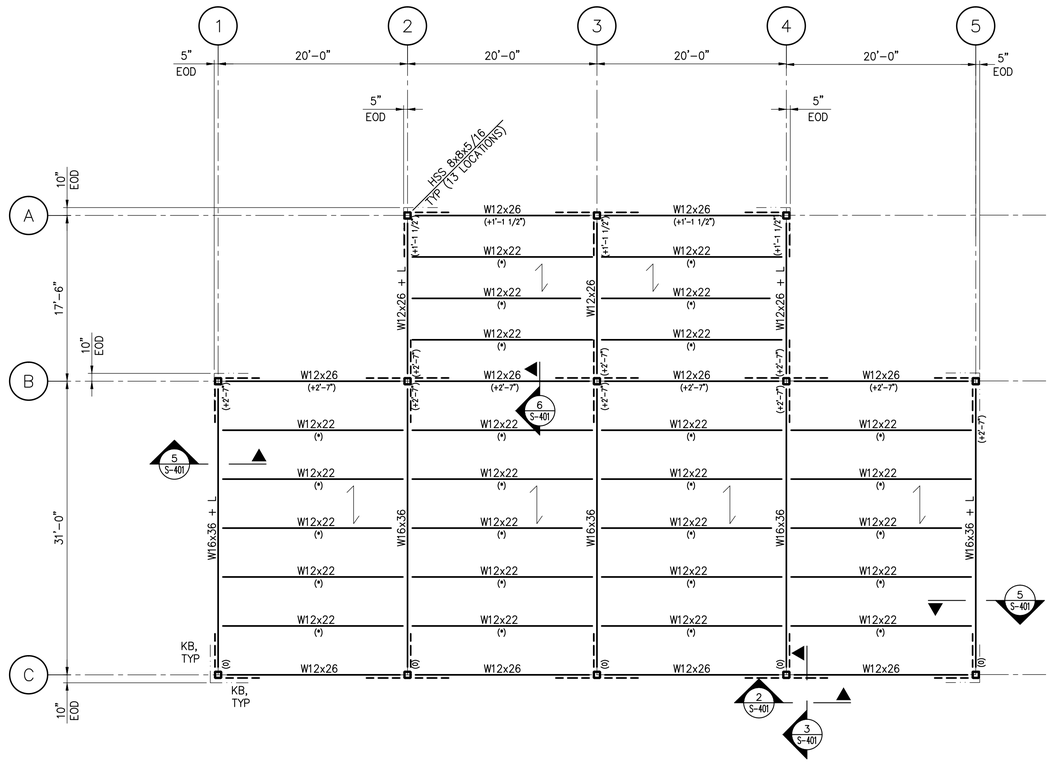

NOTES:

1. PROVIDE 1", 20 GAGE, GALVANIZED, TYPE E, NARROW RIB METAL DECK OVER ENTIRE AREA
2. ⟵ DENOTES DIRECTION OF METAL DECK SPAN.
3. TOP OF STEEL (BOTTOM OF DECK) IS +15'-6" ABOVE REFERENCE ELEVATION UNLESS NOTED +/- THEREFROM.
4. BEAMS MARKED WITH AN ASTERISK (*) ARE AT THE SAME ELEVATION AS THE BEAM IT FRAMES INTO.
5. ALL BEAMS ARE EQUALLY SPACED ON PLAN UNLESS NOTED OTHERWISE.

ROOF FRAMING PLAN
SCALE: 1/8"=1'-0"

No.	Submittal / Revision	Appd	By	Date
1	FINAL DESIGN DRAWINGS	RCS	GTS	3-7-14
2	ISSUE FOR BID	RCS	CTB	3-24-14
3	RECORD SET	RCS	MCF	8-21-14

CITY OF DURHAM, NC

UNAUTHORIZED ALTERATION OR ADDITION TO THIS DOCUMENT IS A VIOLATION OF APPLICABLE STATE AND/OR LOCAL LAWS.

Drawing Copyright © 2012

CHA
8720 Red Oak Boulevard, Suite 505 • Charlotte, NC 28217-4938
Main: (704) 527-3227 • www.chacompanies.com
N.C. Engineering License: F-1165

Designed: EAB | Drawn: CEC | Checked: CJJ

HOUSEHOLD HAZARDOUS WASTE
CUSTOMER DROP-OFF FACILITY

ROOF FRAMING PLAN

Issue Date: 03/7/14 | Project No.: 24451 | Scale: AS NOTED

S-201

File: V:\PROJECTS\CHNC\24451\CADD_ACAD\S201-24451.DWG
Saved: 8/21/2014 8:42:44 AM Plotted: 8/21/2014 1:51:19 PM User: Farone, Michael LastSavedBy: 4193

COLUMN SCHEDULE

LOCATION / ELEVATION	C1, C2, C3, C4, C5, C6	A2, A3, A4	B1, B2, B3, B4, B5, B6
T/STEEL = +18'-1"			
T/STEEL = +16'-7 1/2"			
T/STEEL = +15'-6"			
T/PIER = 0'-0"	HSS 8x8x5/16 (1")	HSS 8x8x5/16 (1")	HSS 8x8x5/16 (1")
BASE PLATE TYPE	BP1	BP1	BP1
W	14"	14"	14"
L	14"	14"	14"
T	3/4"	3/4"	3/4"
BOLTS	(4) 3/4"	(4) 3/4"	(4) 3/4"

NOTES:
1. THE COLUMN LENGTHS SHOWN ARE SCHEMATIC. SEE PLAN FOR EXACT ELEVATIONS OF COLUMNS.
2. PROVIDE 1/2" CAP PLATES ON ALL TUBE COLUMNS.

COLUMN SCHEDULE
NOT TO SCALE

FOOTING SCHEDULE

MARK	SIZE	DEPTH	REINFORCING TOP AND BOTTOM EACH WAY, U.N.O.	REMARKS
F5	5'-0"x5'-0"	12"	(6)-#6	

PIER SCHEDULE

MARK	SIZE A	SIZE B	TYPE	REINFORCING VERTICALS	REINFORCING TIES	REMARKS
P1	20"	20"	T1	(8) #6 BARS	#3 @ 12" O.C.	PROVIDE ADD'L #3 TIES @ 3" OC AT TOP OF PIER FOR ENTIRE LENGTH OF HEADED ANCHOR ROD EMBEDMENT

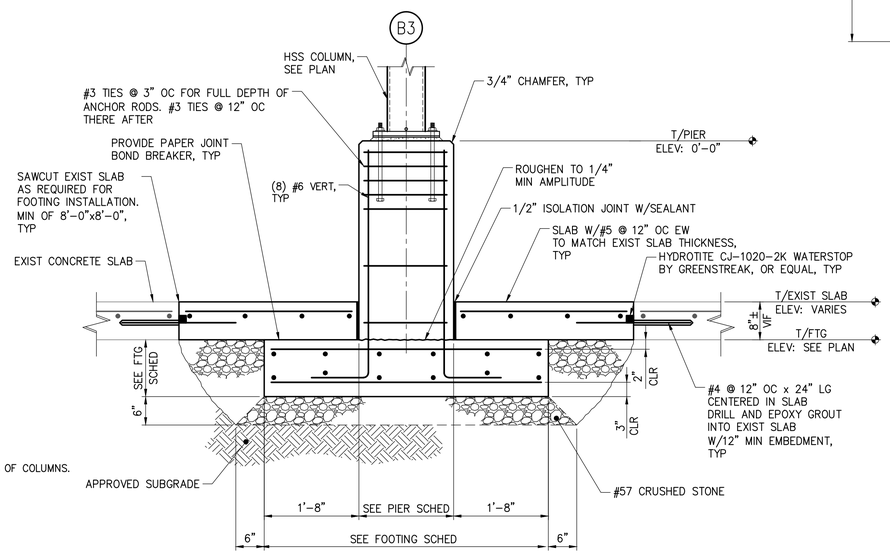

NOTES:
1. CONTRACTOR TO FIELD VERIFY EXISTING SLAB ELEVATIONS. TOP OF NEW FOOTING SHALL BE LEVEL WITH UNDERSIDE OF EXISTING SLAB
2. CARE SHALL BE TAKEN NOT TO UNDERMINE EXIST SLAB
3. NOTIFY ENGINEER IF FOUNDATIONS OR FOOTINGS EXIST BELOW SLAB
4. SEE TYPICAL REINFORCING AT RECTANGULAR AND CIRCULAR OPENINGS IN SLAB DETAIL FOR ADD'L REINFORCING REQUIRED

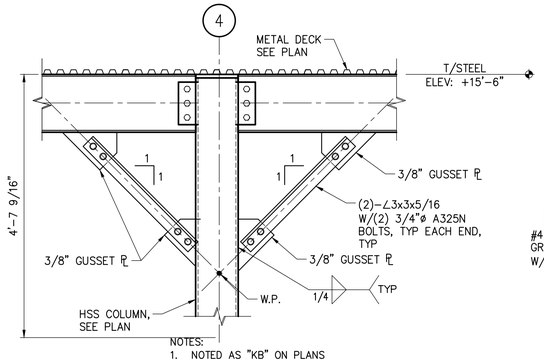

NOTES:
1. NOTED AS "KB" ON PLANS

2 SECTION
SCALE: 3/4"=1'-0"

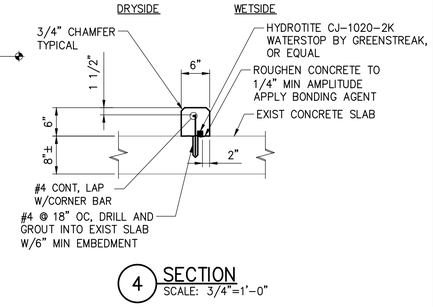

4 SECTION
SCALE: 3/4"=1'-0"

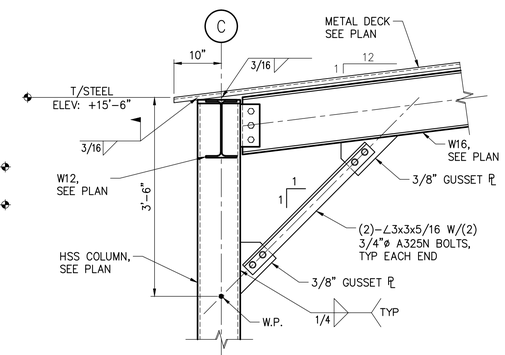

NOTES:
1. NOTED AS "KB" ON PLANS

3 SECTION
SCALE: 3/4"=1'-0"

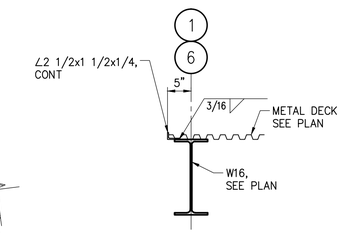

5 SECTION
SCALE: 3/4"=1'-0"

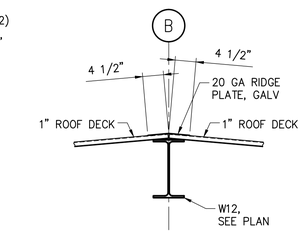

6 SECTION
SCALE: 3/4"=1'-0"

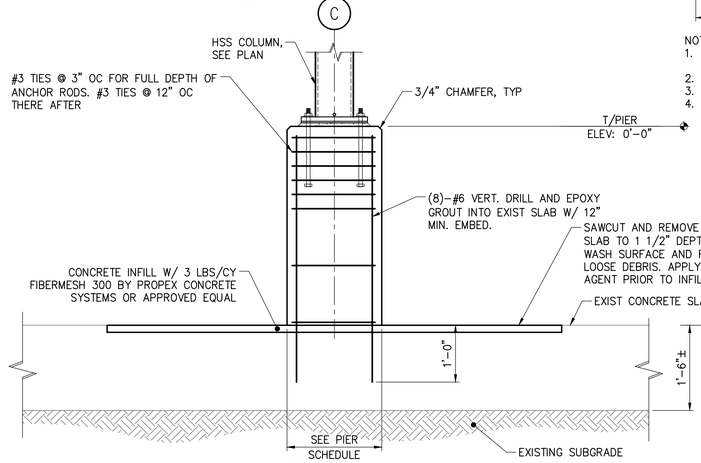

7 SECTION
SCALE: 3/4"=1'-0"

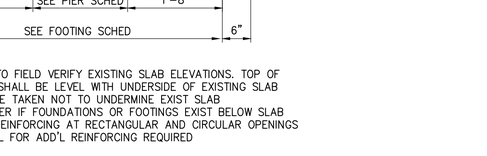

1 SECTION
SCALE: 3/4"=1'-0"

NOTES:
USE ABOVE REINFORCING AROUND OPENING 1'-0" AND LARGER UNLESS NOTED OTHERWISE ON DRAWINGS. FOR OPENINGS LESS THAN 1'-0", NO ADDITIONAL REINFORCING IS REQUIRED. UNLESS NOTED OTHERWISE ON DRAWINGS.

TYPICAL REINFORCING AT RECTANGULAR AND CIRCULAR OPENINGS IN SLAB DETAIL
NOT TO SCALE

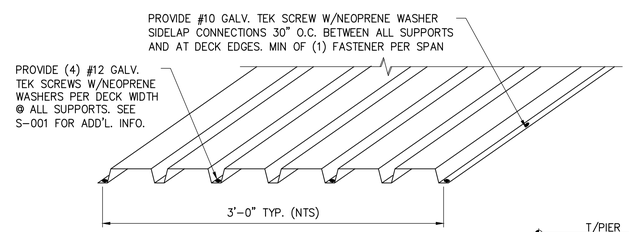

TYPICAL DECK CONNECTION DETAIL
NOT TO SCALE

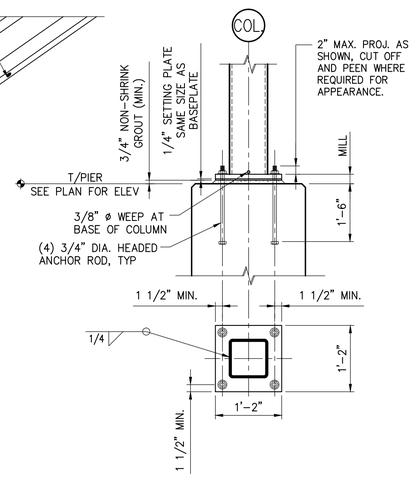

NOTES:
1. STEEL SHIMS OR LEVELING SCREWS ARE ACCEPTABLE PLUMBING ALTERNATIVES

TYPICAL STEEL COLUMN BASE PLATE DETAIL
NOT TO SCALE

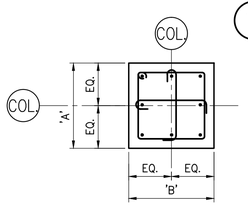

NOTES:
1. DIMENSIONS "A" AND "B" REPRESENT LIMITS OF PIER/PIER REINFORCING.

PIER SCHEDULE AND PLAN DETAILS
NOT TO SCALE

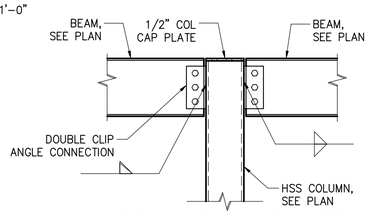

TYPICAL BEAM CONNECTION TO HSS COLUMN DETAIL
NOT TO SCALE

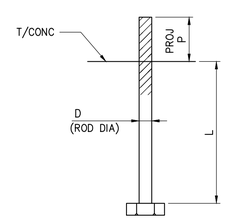

ANCHOR ROD SCHEDULE			
No.	D	L	P
AB1	3/4"	18"	2"

NOTES:
1. PROVIDE WITH ANCHOR ROD, HEAVY HEX NUTS WITH FLAT WASHERS (5/16" MIN. THICKNESS).
2. ALL ANCHOR RODS SHALL BE HOT DIP GALVANIZED.

ANCHOR ROD SCHEDULE
NOT TO SACLE

No.	Submittal / Revision	Appd	By	Date
0	FINAL DESIGN DRAWINGS	RCS	GTS	3-7-14
1	ISSUE FOR BID	RCS	CTB	3-24-14
2	RECORD SET	RCS	MCF	8-21-14

CITY OF DURHAM, NC

Drawing Copyright © 2012

CHA
8720 Red Oak Boulevard, Suite 505 • Charlotte, NC 28217-4938
Main: (704) 527-3227 • www.chacompanies.com
N.C. Engineering License: F-1165

UNAUTHORIZED ALTERATION OR ADDITION TO THIS DOCUMENT IS IN VIOLATION OF APPLICABLE STATE AND/OR LOCAL LAWS.

Designed: EAB | Drawn: CEC | Checked: CJJ

HOUSEHOLD HAZARDOUS WASTE CUSTOMER DROP-OFF FACILITY

SECTIONS AND TYPICAL SECTIONS, DETAILS AND SCHEDULES

Issue Date: 03/7/14 | Project No.: 24451 | Scale: AS NOTED

S-401

File: V:\PROJECTS\CHNC\24451\CADD_ACAD\S401-24451.DWG User: Farone, Michael LastSavedBy: 4193
Saved: 8/21/2014 1:56:24 PM Plotted: 8/21/2014 1:56:59 PM

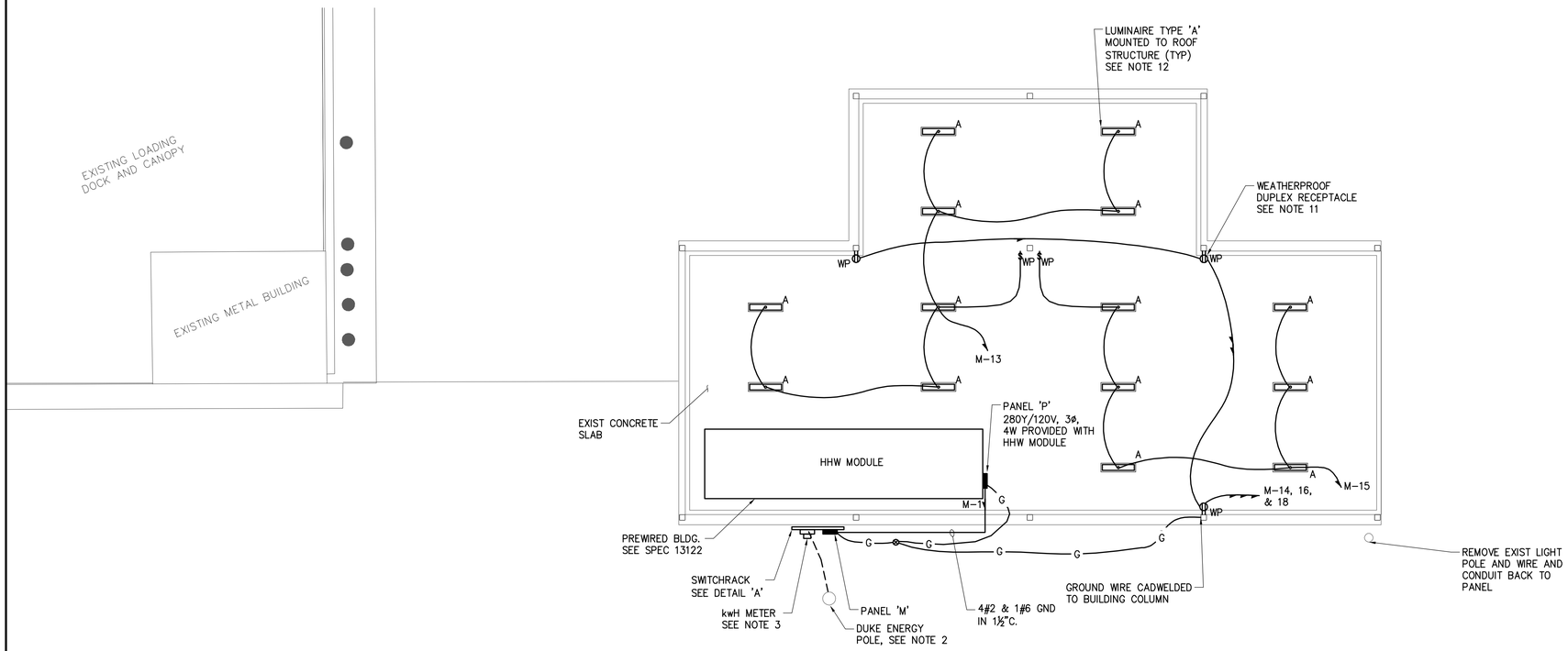

CANOPY PLAN – ELECTRICAL

1/8"=1'-0"

ELECTRICAL LEGEND

- WIRE IN EXPOSED CONDUIT
- WIRE IN UNDERGROUND CONDUIT
- WIRE IN CONDUIT HOME RUN TO PANEL
- — G — GROUND WIRE
- WP WEATHERPROOF DUPLEX RECEPTACLE
- $ WP WEATHERPROOF LIGHT SWITCH
- CIRCUIT BREAKER PANELBOARD
- A TYPE A LUMINAIRE
- COPPERWELD GROUND ROD, 3/4" DIA. x 10 FT. LONG
- HDBC HARD DRAWN BARE COPPER
- C CONDUIT
- AWG AMERICAN WIRE GAUGE

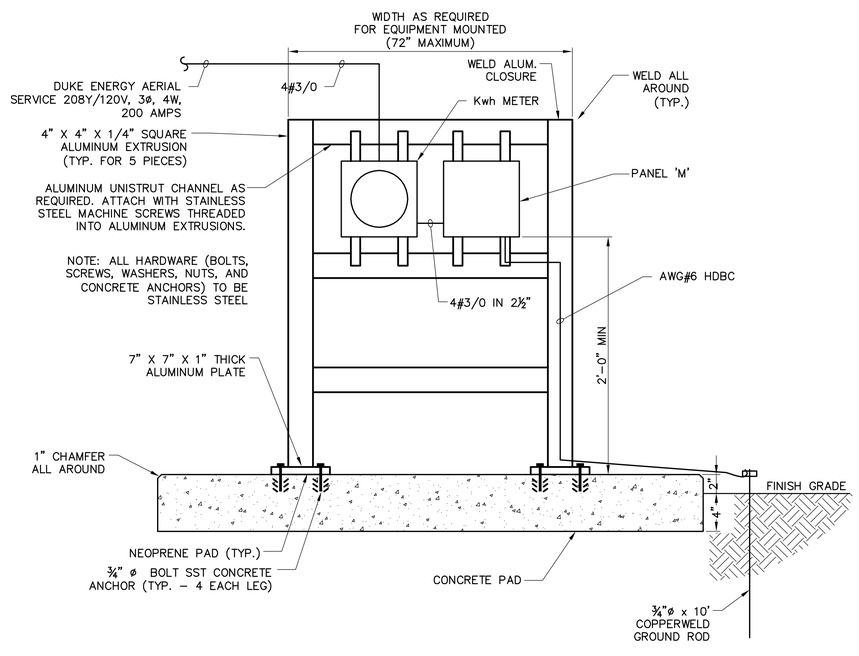

A SWITCHRACK DETAIL

NOT TO SCALE

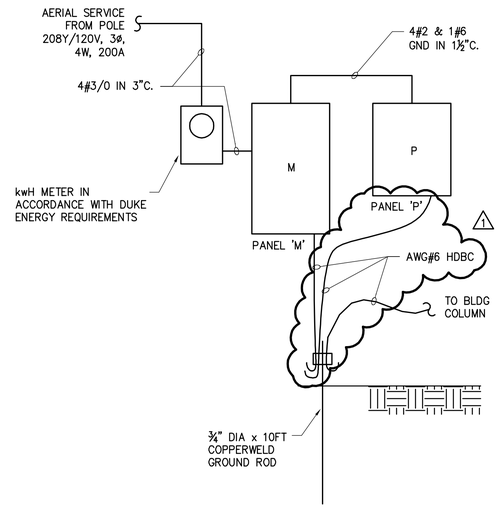

ONE-LINE DIAGRAM

PANEL DESIGNATION: M
VOLTAGE: 208Y/120 VOLTS, 3ø, 4 WIRE
AMPERES: 200A

LOCATION: SWITCHRACK
MAIN: 200/3 MCB
PANEL MOUNTING: NEMA 3R

LOAD SERVED	CONNECTED LOAD (KVA) A	B	C	CIRCUIT BREAKER AMPS	POLES	CKT NO.	CKT NO.	BREAKER AMPS	POLES	LOAD (KVA) A	B	C	LOAD SERVED
HHW MODULE	3	3	3	100	3	1	2	60	3				SPARE
EQUIPPED SPACE					3	7	8		3				EQUIPPED SPACE
LIGHTS	0.5			20	1	13	14	20	1	0.5			RECEPTACLES
LIGHTS		0.6		20	1	15	16	20	1		0.5		RECEPTACLES
SPARE				20	1	17	18	20	1			0.5	RECEPTACLES
SPARE				20	1	19	20	20	1				SPARE
SPARE				20	1	21	22	20	1				SPARE
SPARE				20	1	23	24	20	1				SPARE
SUB-TOTAL	3.5	3.6	3							0.5	0.5	0.5	SUB-TOTAL

L1: 4.0 KVA
L2: 4.1 KVA
L3: 3.5 KVA

TOTAL CONNECTED LOAD = 11.6 KVA
C/B'S #14, 16, & 18 TO BE GFCI TYPE.
INTERRUPTING RATING AT 240 VOLTS: 10,000 AMPS

ELECTRICAL NOTES

1. ELECTRICAL EQUIPMENT, MATERIALS, AND INSTALLATION SHALL BE NEW AND IN ACCORDANCE WITH THE LATEST EDITION OF THE NATIONAL ELECTRICAL CODE (NEC) AND APPLICABLE STATE AND LOCAL CODES.
2. ELECTRICAL SERVICE TO PANEL 'M' SHALL BE AERIAL AT 208Y/120 VOLTS, 3 PHASE, 4 WIRE, 200 AMPS. INSTALL SERVICE CONDUIT AS SHOWN AND IN ACCORDANCE WITH DUKE ENERGY REQUIREMENTS. DUKE ENERGY WILL PROVIDE SERVICE WIRE.
3. FURNISH AND INSTALL THE KWH METER BASE IN ACCORDANCE WITH DUKE ENERGY REQUIREMENTS.
4. CONDUIT AND WIRE USAGE:
5. EXPOSED CONDUIT SHALL BE HEAVY WALL RIGID GALVANIZED STEEL.
6. UNDERGROUND CONDUIT SHALL BE PVC INSTALLED 30 INCHES BELOW GRADE. STUBUPS FROM UNDERGROUND SHALL BE HEAVY WALL RIGID GALVANIZED STEEL. NO EXPOSED PVC CONDUIT SHALL BE INSTALLED.
7. WIRE SHALL BE STRANDED COPPER, THWN INSULATED.
8. INSTALL EXPOSED CONDUIT PARALLEL TO BUILDING STRUCTURAL MEMBERS AND ATTACHED WITH GALVANIZED STEEL CLAMPS AND HARDWARE TO STRUCTURE.
9. DEVICE BOXES SHALL BE CAST METAL WITH THREADED CONDUIT HUBS EQUAL TO CROUSE-HINDS TYPE 'FS'.
10. RECEPTACLES AND LIGHT SWITCHES SHALL BE SPECIFICATION GRADE INSTALLED IN WEATHERPROOF BOXES.
11. DUPLEX RECEPTACLES SHALL BE RATED 20 AMPS AND INSTALLED IN METALLIC "WHILE-IN-USE" WEATHERPROOF BOXES EQUAL TO ARROW-HART CAT. NO. WIUMV-1.
12. LUMINAIRE TYPE 'A' SHALL BE THE LED TYPE, WITH WET LOCATION LABEL, LITHONIA CAT. NO. VAP-59LED-SYM-120V.
13. PANELBOARD 'M' SHALL BE RATED NEMA 3R WITH COPPER BUS AND BOLT-ON CIRCUIT BREAKERS. STAB CONNECTED CIRCUIT BREAKERS ARE NOT ACCEPTABLE. PANELBOARD SHALL HAVE COPPER NEUTRAL AND GROUND BUSES. MAKE THE SERVICE NEUTRAL BOND INSIDE THE PANEL TO THE GROUNDING ELECTRODE.
14. PROVIDE A GREEN TW INSULATED COPPER GROUNDING CONDUCTOR IN ALL CONDUITS AND CONNECT BOTH ENDS TO PROVIDE THE NEC REQUIRED EQUIPMENT GROUNDING. EQUIPMENT GROUNDING SHALL BE CONTINUOUS AND SECURE THROUGHOUT THE ENTIRE ELECTRICAL SYSTEM.

No.	Submittal / Revision	Apr'd	By	Date
1	FINAL DESIGN DRAWINGS	RCS	GTS	3-7-14
2	BUILDING PERMIT	RCS	BSR	03.10.14
3	RECORD SET	RCS	ARH	8-22-14

CITY OF DURHAM, NC

UNAUTHORIZED ALTERATION OR ADDITION TO THIS DOCUMENT IS A VIOLATION OF APPLICABLE STATE AND/OR LOCAL LAWS

Drawing Copyright © 2012
CHA
8720 Red Oak Boulevard, Suite 505 · Charlotte, NC 28217-4938
Main: (704) 527-3227 · www.chacompanies.com
N.C. Engineering License: F-1165

Checked: RCM
Drawn: CDH
Designed: RCM

HOUSEHOLD HAZARDOUS WASTE CUSTOMER DROP-OFF FACILITY

ELECTRICAL LIGHTING AND POWER PLAN

Scale: AS NOTED
Project No.: 24451
Issue Date: 03/7/14

E-101

File: V:\PROJECTS\CHNC\2445\CADD_ACAD\E-101_2445\-RECORD SET.DWG
Saved: 8/22/2014 11:42:53 AM Plotted: 8/22/2014 11:44:14 AM User: Hogan, Adam LastSavedBy: 4458

"As Built" Drawings

GENERAL NOTES:

BUILDING INFORMATION:
MODEL: 3208FRE
DIMENSIONS: SEE SHEET D1
ANCHOR BOLT REACTIONS: SEE CALCULATIONS
BUILDING DEAD LOAD (DL): 23,717 LBS
ACCESSORY DEAD LOAD: 3,558 LBS
UNIFORM BUILDING DL + ACCESSORY: 115 PSF
SIZE OF BUILDING: 181 SF (INTERIOR)
VOLUME OF BUILDING: 1,418 CF (INTERIOR)

THIS BUILDING IS EQUIPPED WITH A 7" RECESSED FLOOR TO PROVIDE SECONDARY SPILL CONTAINMENT WITH A CAPACITY OF APPROXIMATELY 766 GALLONS.

APPLICABLE CODES:
2012 NORTH CAROLINA BUILDING CODE
2012 NORTH CAROLINA MECHANICAL CODE
2011 NORTH CAROLINA ELECTRIC CODE

DESIGN LOAD CRITERIA:

CONSTRUCTION CLASS	II-B
OCCUPANCY USE GROUP	H-2
NUMBER OF STORIES	1
SETBACK REQUIREMENTS	PER LOCAL AUTHORITY
MIN. SSI GROUND SNOW LOAD Pg	40 PSF
SITE GROUND SNOW LOAD, Pg	15 PSF
ROOF LIVE LOAD	40 PSF
FLOOR LIVE LOAD	500 PSF
EXPLOSION LOAD	215 PSF
BASIC WIND SPEED	130 MPH (3 SECOND GUST)
WIND EXPOSURE CATEGORY	C
SEISMIC DESIGN CATEGORY	D
OCCUPANCY CATEGORY	III
SOIL SITE CLASS	D
SEISMIC (Ss)	.31g
SEISMIC (S1)	.18g

DRAWING INDEX:

DWG #	DESCRIPTION	SHEET #
C	COVER SHEET	1 OF 1
D1	BUILDING LAYOUT	1 OF 2
D2	BUILDING ELEVATIONS	2 OF 2
S1	STRUCTURAL FRAMING PLAN	1 OF 4
S2	STRUCTURAL DETAILS	2 OF 4
S3	STRUCTURAL DETAILS	3 OF 4
S4	STRUCTURAL DETAILS	4 OF 4
E	WIRING DIAGRAM	1 OF 1
L-674101	FIRE SUPPRESSION	1 OF 1
F1	FOUNDATION GUIDELINES	1 OF 2
F2	FOUNDATION GUILDLINES	2 OF 2

GENERAL:

THE DATA PLATE AND NORTH CAROLINA CERTIFICATION LABEL WILL BE LOCATED ON THE INTERIOR OF THE WALL BESIDE THE DOOR.

THIS BUILDING CARRIES FACTORY MUTUAL SYSTEM APPROVAL, WITH A 2-HOUR FIRE PROTECTION RATING.

ALL REQUIRED PERMITS MUST BE OBTAINED FROM THE FIRE PREVENTION BUREAU BEFORE THIS BUILDING IS OCCUPIED.

THIS BUILDING IS NOT TO BE SITED WHERE LOCAL CONDITIONS EXCEED THE DESIGN PARAMETERS.

BUILDING IS NOT INTENDED FOR HUMAN OCCUPANCY.

THIS BUILDING IS NOT DESIGNED FOR INSTALLATION IN FEMA FLOOD PRONE AREAS.

THIS BUILDING IS EXEMPT FROM HANDICAP ACCESSIBILITY PROVISIONS PER IBC SECTION 1103.2.7.

ALL INTERIOR AND EXTERIOR SURFACES ARE TO HAVE CHEMICALLY RESISTANT FINISHES; EPOXY PRIMER WITH ALIPHATIC POLYURETHANE FINISH COAT:
PRIMER COAT: EPOXY
FINISH COAT: POLYURETHANE

OFF LOADING:

THIS BUILDING SHALL BE LIFTED ONLY WHEN EMPTY, AND WITH ALL DOORS CLOSED & LATCHED.

CRANE LIFTING SHALL BE WITH CABLES OR STRAPS CAPABLE OF SUPPORTING A TOTAL BUILDING WEIGHT PER SPECIFIC DESIGN CALCULATIONS. IF USING LIFT STRAPS, INSTALLER SHALL USE SPREADER BARS A MINIMUM OF 2 FEET WIDER THAN BUILDING ROOF TO PREVENT DAMAGE TO FRONT AND REAR ROOF OVERHANGS. INSTALLER SHALL KEEP ONE END OF BUILDING TETHERED AT ALL TIMES TO PREVENT BUILDING FROM SWINGING IN AN UNCONTROLLABLE MANNER.

WHEN UNLOADING BUILDING FROM DELIVERY TRUCK, INSTALLER SHALL INSURE THAT SAFE OVERHEAD CLEARANCE IS PROVIDED TO STRUCTURAL, ELECTRICAL, PLUMBING OR OBSTRUCTIONS.

STRUCTURAL:

STEEL MEMBERS SUCH AS CHANNELS, ANGLES, AND OTHER STEEL MEMBERS UNLESS OTHERWISE SPECIFIED SHALL CONFORM TO ASTM A36. TUBE STEEL SHALL CONFORM TO ASTM A500 "B" WITH MINIMUM YIELD STRENGTH OF 46.0 KSI.

LIGHT GAGE STEEL FRAMING MEMBERS SHALL CONFORM TO ASTM A1011 STEEL WITH MINIMUM YIELD STRENGTH OF 38.0 KSI.

COLD-FORMED STEEL MEMBERS AND CONSTRUCTION SHALL CONFORM TO THE REQUIREMENTS CONTAINED IN AISI S 100 AND AISI S 200.

FABRICATION AND ERECTION TOLERANCES SHALL CONFORM TO THE AMERICAN INSTITUTE OF STEEL CONSTRUCTION MANUAL OF ALLOWABLE STRESS DESIGN, 13TH EDITION.

THIS BUILDING EXTERIOR ROOF TO BE OF 12 GAGE STEEL, FLOOR 10 GA STEEL UNITIZED CONSTRUCTION; WELDED, NOT MECHANICALLY FASTENED.

THIS BUILDING IS EQUIPPED WITH GALVANIZED STEEL FLOOR GRATING (RATED AT 500 PSF UNIFORM LOAD.

THIS BUILDING IS EQUIPPED WITH FOUR (4) 3-BOLT HOLD DOWN BRACKETS (ONE PER CORNER).

SUB-FLOOR SUPPORT CHANNELS SHALL REST ON AND BE IN CONTINUOUS CONTACT WITH CONCRETE OR OTHER SURFACE CAPABLE OF SUPPORTING 1000 PSF. FOOTINGS, IF REQUIRED FOR THE TIE DOWNS, SHALL BE DESIGNED BY AN ENGINEER HIRED BY THE OWNER OR CONTRACTOR AND LICENSED IN THE STATE WHERE THE UNIT IS TO BE INSTALLED.

NO CUSTOMER MODIFICATIONS ARE PERMITTED WHICH WOULD ALTER THE STRUCTURAL DESIGN OF THE PRE-ENGINEERED AND APPROVED BUILDINGS PROVIDED BY SAFETY STORAGE, INC. ANY SPECIAL FOUNDATIONS, PADS, OR OTHER SUPPORTING OR ANCILLARY MODIFICATIONS IN OR AROUND THE BUILDING ARE TO BE MADE FOLLOWING DESIGN OF SUCH BY THE CUSTOMER RETAINED LICENSED PROFESSIONAL ENGINEER APPROVED BY THE AUTHORITY / REGULATORY AGENCY HAVING LOCAL JURISDICTION.

DOORS & WINDOWS:

BUILDING IS EQUIPPED WITH THREE (3) UL-LISTED AND LABELED, 3-HR FIRE-RATED, HINGED, DOUBLE LEAF DOORS EQUIPPED WITH SELF CLOSING HARDWARE, PANIC EXIT DEVICE WITH 3-POINT LATCHING AND WEATHERSTRIPPING. THE DOORS ARE OPENABLE FROM INSIDE THE BUILDING WITHOUT THE USE OF A KEY OR ANY SPECIAL KNOWLEDGE OR EFFORT.

EACH DOOR TO BE EQUIPPED WITH METAL FLIPCHART HAZ-MAT "D.O.T." PLACARD AND NFPA 704M STICKER/SYMBOL.

FIRE PROTECTION:

THE INTERIOR FINISH MATERIALS ARE TO HAVE A FLAME SPREAD LESS THAN OR EQUAL TO TWENTY (20) AND SMOKE DEVELOPMENT OF ZERO (0).

ALL EXTERIOR WALLS CONFORM TO UNDERWRITERS LABORATORIES FIRE RESISTANCE RATING DESIGN NUMBER U425 AND CARRY A 2-HOUR FIRE RATING, WHICH IS APPROVED BY FACTORY MUTUAL.

ALL INTERIOR WALLS CONFORM TO UNDERWRITERS LABORATORIES FIRE RESISTANCE RATING DESIGN NUMBER U491 AND CARRY A 2-HOUR FIRE RATING.

ALL THROUGH PENETRATIONS IN FIRE RATED ASSEMBLIES ARE SEALED WITH A UL CLASSIFIED HIGH PERFORMANCE INTUMESCENT FIRESTOP SEALANT.

PORTABLE FIRE EXTINGUISHERS, IF REQUIRED SHALL BE INSTALLED ON SITE BY OTHERS.

THIS BUILDING IS EQUIPPED WITH ONE (1) PRE-ENGINEERED, DRY CHEMICAL FIRE SUPPRESSION SYSTEM WHICH INCLUDES: 1" & ¾" SCHEDULE 40, NPT PIPING & FITTINGS, FOUR (4) TOTAL-FLOODING NOZZLES WITH CAP COVERS THAT BLOW OFF UPON SYSTEM ACTIVATION AND A 45 LB (ABC) PRESSURIZED AGENT CYLINDER. THIS SYSTEM WILL HAVE AN EXTERIOR MOUNTED AUDIBLE ALARM BELL WIRED TO CONTACTS FOR CENTRALIZED COMMUNICATION (REMOTE ANNUNCIATION). THIS SYSTEM WILL HAVE TWO (2) ACTIVATION POINTS - (1) MANUAL PULL STATION AND (1) AUTOMATIC VIA FUSIBLE LINKS (SET AT 212 DEGREES). THIS SYSTEM HAS A WEATHERPROOF ENCLOSURE OVER THE AGENT CYLINDER AND UNIT CONTROL PER NFPA 217. THE SYSTEM IS "UL" AND "FM" APPROVED FOR PRODUCT AND INSTALLATION METHOD.
THE PRE-ENGINEERED SYSTEM INSTALLED IS FOR A 3608FR, (4) NOZZLE SYSTEM. THIS 3208FR HAS (3) EQUAL COMPARTMENTS WHICH REQUIRES INSTALLATION OF A (4) NOZZLE SYSTEM, THE STANDARD SYSTEM FOR THE 3208FR HAS ONLY (2) NOZZLES.

VENTILATION:

ALL AIR VENTS ARE PROTECTED WITH A UL-LISTED FIRE DAMPER HAVING A 3-HR FIRE PROTECTION RATING. THE TOTAL AREA OF OPENINGS DOES NOT EXCEED 50% OF THE AREA OF THE ASSOCIATED WALL.

THIS BUILDING IS EQUIPPED WITH THREE (3) FUME REMOVAL/VENT SYSTEMS: WITH EXPLOSION PROOF 450 CFM (CLASS 1, DIVISION 1, GROUP C & D) EXHAUST FANS, WITH A NON-STATIC, NON-SPARKING, CAST ALUMINUM FAN BLADES. THE FUME REMOVAL SYSTEMS ARE DESIGNED TO AUTOMATICALLY SHUT DOWN UPON ACTIVATION OF THE DRY CHEMICAL FIRE SUPPRESSION SYSTEM. THE FUME REMOVAL/VENT SYSTEMS ARE DESIGNED TO RUN CONTINUOUSLY AND ARE EQUIPPED WITH A EXPLOSION PROOF, EXTERIOR MOUNTED, WEATHER PROOF, "BREAK-GLASS" TYPE FAN SWITCH LABELED "VENTILATION SYSTEM EMERGENCY SHUT OFF" FOR MANUAL SHUTDOWN.

FUME REMOVAL/VENT SYSTEMS EXHAUST TERMINATIONS WITH REQUIRED CLEARANCES PER 2012 NCMC SECTION 501.2.1 SHALL BE THE RESPONSIBILITY OF OTHERS, SUBJECT TO INSPECTION BY THE LOCAL AUTHORITY HAVING JURISDICTION.

ELECTRICAL:

ELECTRICAL POWER: 208/120V 3Ø

MAXIMUM LINE AMPS: 10.09
TOTAL KVA LOAD: 2.20

UNLESS OTHERWISE NOTED:
ALL WIRE IS THHN INSULATED
ALL WIRE IS 12 AWG
ALL WIRE IN ½" IMC CONDUIT (INTERIOR)
ALL WIRE IN ½" IMC CONDUIT (EXTERIOR)

ALL WIRING FIXTURES AND EQUIPMENT TO BE UL, cUL OR CSA LISTED OR LABELED.

ALL ELECTRICAL COMPONENTS AND WIRING WITHIN CLASS I, DIVISION 1 LOCATIONS IN THIS BUILDING SHALL BE INSTALLED AND LISTED IN ACCORDANCE WITH THE NEC REQUIREMENTS FOR THAT CLASSIFICATION.

STATIC BONDING (ESD GROUNDING) INTERIOR & EXTERIOR IS PROVIDED WITH 10' EXTERIOR GROUNDING ROD & #4AWG SOLID COPPER BOND WIRE.

EXTERIOR LIGHTING, IF REQUIRED, TO BE PROVIDED ON SITE BY OTHERS SUBJECT TO LOCAL AUTHORITY HAVING JURISDICTION.

INTERIOR EGRESS LIGHTING, IF REQUIRED, TO BE PROVIDED ON SITE BY OTHERS SUBJECT TO LOCAL AUTHORITY HAVING JURISDICTION.

EMERGENCY/STANDBY POWER, IF REQUIRED, TO BE PROVIDED ON SITE BY OTHERS SUBJECT TO LOCAL AUTHORITY HAVING JURISDICTION.

THIS BUILDING IS EQUIPPED WITH ONE (1) EMERGENCY LOCAL ALARM SWITCH, WHICH ACTIVATES AN EMERGENCY ALARM HORN AND IS DIRECTLY WIRED TO A DRY CONTACT FOR REMOTE MONITORING.

NORTH CAROLINA PROFESSIONAL SEAL 041071 ENGINEER EMMY M DOWDEN
2/27/14

DRAWN BY:	JGE
DATE:	02/25/14

APPROVED
John Sisler
MAR 0 6 2014
T.R. ARNOLD & ASSOCIATES, INC.
Review of this document does not authorize or approve any omissions or deviations from the applicable requirements.

DURHAM HHW FACILITY
2115 E. CLUB BLVD.
DURHAM, NC 27704

SSI MODEL: 3208FRE
SERIAL #: 24745

SAFETY STORAGE
855 N. 5TH STREET
CHARLESTON, IL 61920
PHONE: (217) 345-4422
FAX: (217) 345-4475

COPYRIGHT © 1996 BY SAFETY STORAGE, INC.
ALL RIGHTS RESERVED
THESE DOCUMENTS ARE NOT TO BE REPRODUCED FOR ANY PURPOSE, IN WHOLE OR IN PART, WITHOUT WRITTEN PERMISSION FROM SAFETY STORAGE, INC.

COVER SHEET

C

DRAWN BY:	JGE
DATE:	02/24/14
REV	DATE

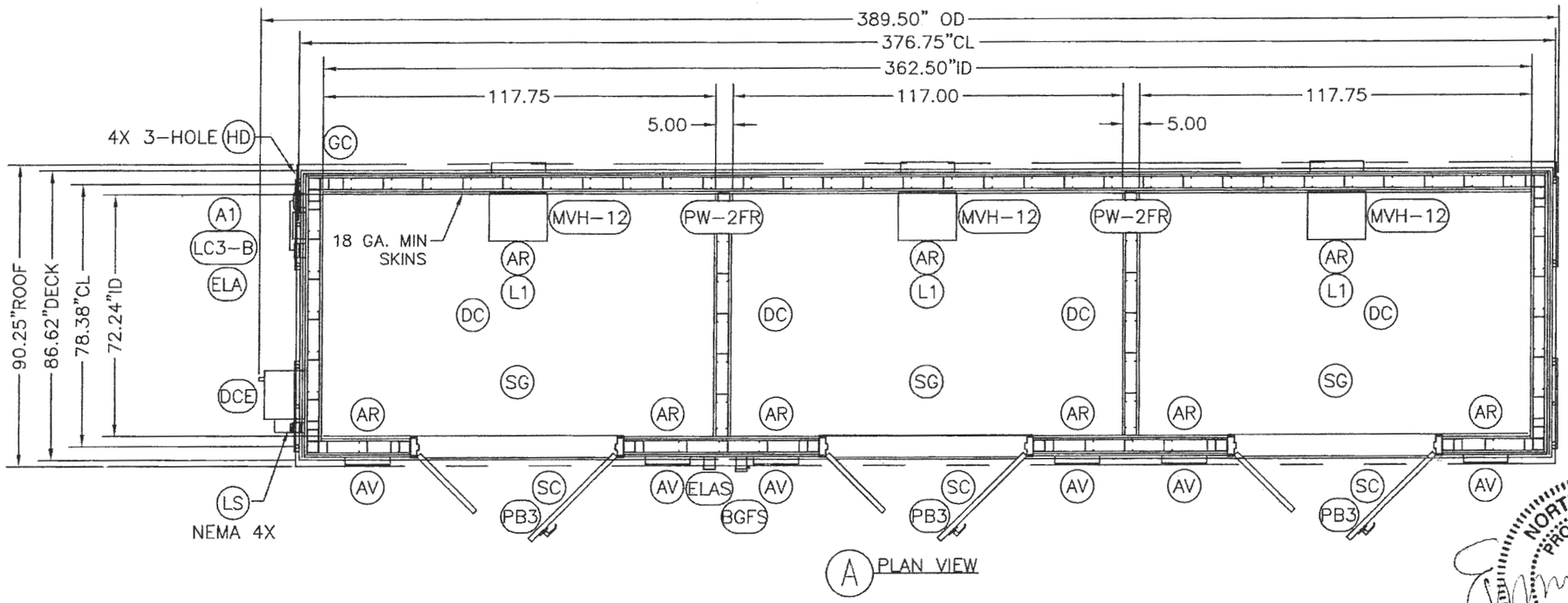

A PLAN VIEW

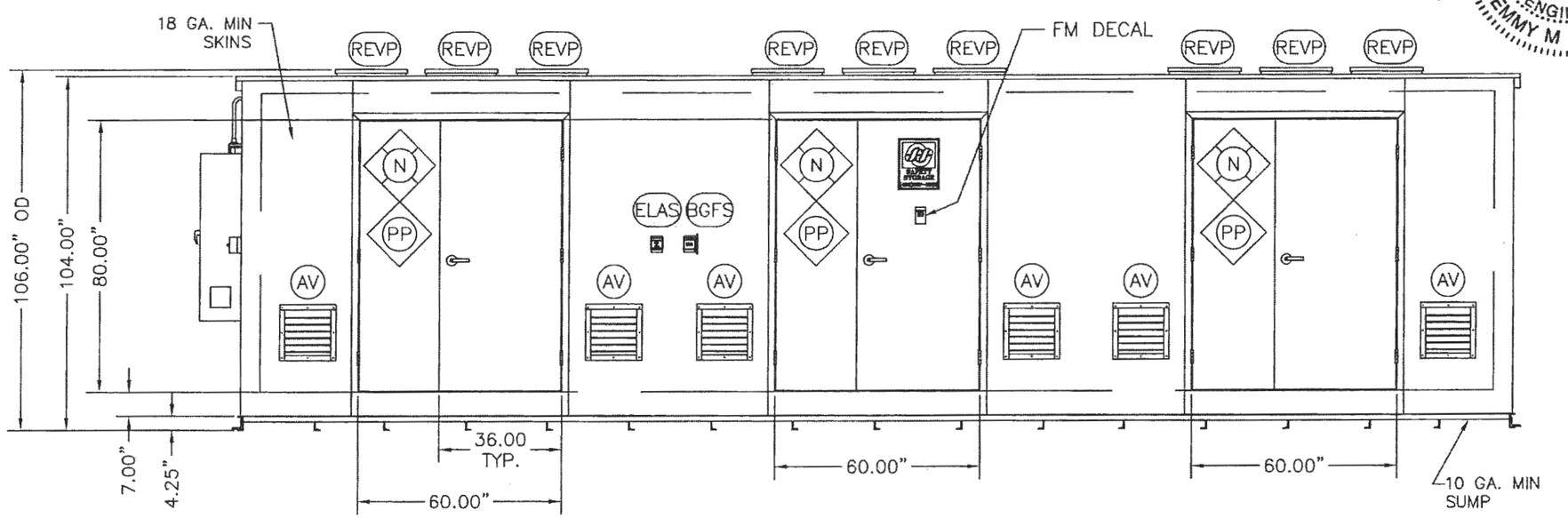

B FRONT VIEW

APPROVED
MAR 06 2014
T.R. ARNOLD & ASSOCIATES, INC.
Review of this document does not authorize or approve any omissions or deviations from the applicable requirements.

NORTH CAROLINA PROFESSIONAL SEAL 041071 ENGINEER EMMY M DOWDEN
2/27/14

DURHAM HHW FACILITY
2115 EAST CLUB BLVD.
DURHAM, NC 27704

SSI MODEL: 3208FRE
SERIAL #: 24723

SAFETY STORAGE
855 N. 5TH STREET
CHARLESTON, IL 61920
PHONE: (217) 345-4422
FAX: (217) 345-4475

COPYRIGHT © 1996 BY SAFETY STORAGE, INC.
ALL RIGHTS RESERVED
THESE DOCUMENTS ARE NOT TO BE REPRODUCED FOR ANY PURPOSE, IN WHOLE OR IN PART, WITHOUT WRITTEN PERMISSION FROM SAFETY STORAGE, INC.

BUILDING ELEVATIONS

D1

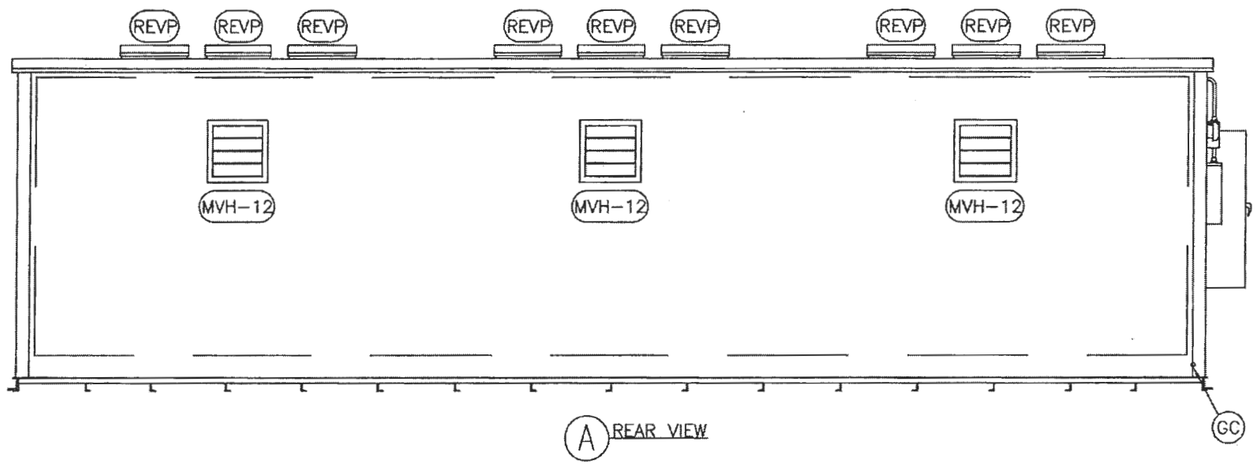

A REAR VIEW

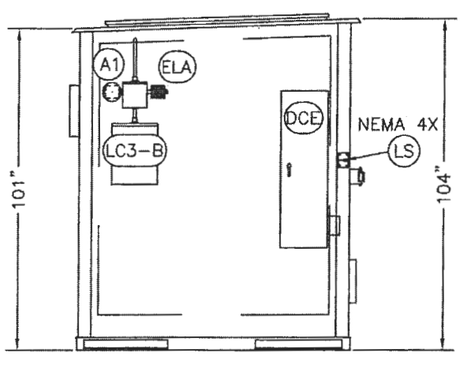

B LEFT END VIEW

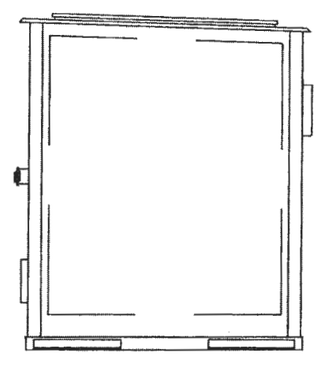

C RIGHT END VIEW

LEGEND

A1:	ALARM, DRY-CHEM (NON-EP)
AR:	ADJUSTABLE REGISTER
AV:	AIR INLET VENT, FIRE RATED BUILDING
BGFS:	BREAK GLASS FAN SWITCH (EP)
DC:	DRY CHEM NOZZLE
DCE:	DRY-CHEM ENCLOSURE WITH AGENT CYLINDER
ELA:	EMERGENCY LOCAL ALARM (NON-EP)
ELAS:	EMERGENCY LOCAL ALARM SWITCH, WITH GUARD (EP)
FE-10:	FIRE EXTINGUISHER, 4A60BC, 10# CHARGE
GC:	GROUNDING CONNECTION
HD:	HOLD-DOWN BRACKET
L1:	LIGHT, 135 WATT (EP)
LC3-B:	LOAD CENTER, 3 PHASE, BOLT-IN BREAKERS (NEMA 3R)
LR1:	LOADING RAMP, STEEL, GALVANIZED (48"X88")
LS:	LIGHT SWITCH, NEMA 4X (NON-EP)
MVH-12:	MECHANICAL VENTILATOR, 12", INTERIOR HIGH MOUNT, 450 CFM FAN (EP)
N:	NFPA 704M RATING SIGN
PB3:	PANIC BAR, 3-POINT LATCH (FOR INSIDE OPENING OF DOOR)
PP:	PERMANENT D.O.T. PLACARD
PW-2FR:	PARTITION WALL, 2HR FIRE RATED WITH SUMP DIVIDER
REVP:	ROOF EXPLOSION VENT PANEL
SC:	SELF CLOSER
SG:	STEEL FLOOR GRATING (GALVANIZED)

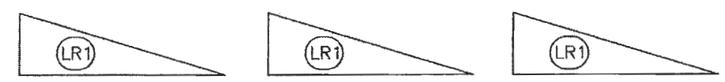

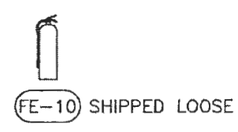

SHIPPED LOOSE

NORTH CAROLINA PROFESSIONAL SEAL 041071 ENGINEER EMMY M DOWDEN

2/27/14

DRAWN BY:	JGE
DATE:	02/24/14
REV	DATE

APPROVED
MAR 06 2014
T.R. ARNOLD & ASSOCIATES, INC.
Review of this document does not authorize or approve any omissions or deviations from the applicable requirements.

DURHAM HHW FACILITY
2115 EAST CLUB BLVD.
DURHAM, NC 27704

SSI MODEL: 3208FRE
SERIAL #: 24723

SAFETY STORAGE
855 N. 5TH STREET
CHARLESTON, IL 61920
PHONE: (217) 345-4422
FAX: (217) 345-4475

COPYRIGHT © 1996 BY SAFETY STORAGE, INC.
ALL RIGHTS RESERVED
THESE DOCUMENTS ARE NOT TO BE REPRODUCED FOR ANY PURPOSE, IN WHOLE OR IN PART, WITHOUT WRITTEN PERMISSION FROM SAFETY STORAGE, INC.

BUILDING ELEVATIONS

D2

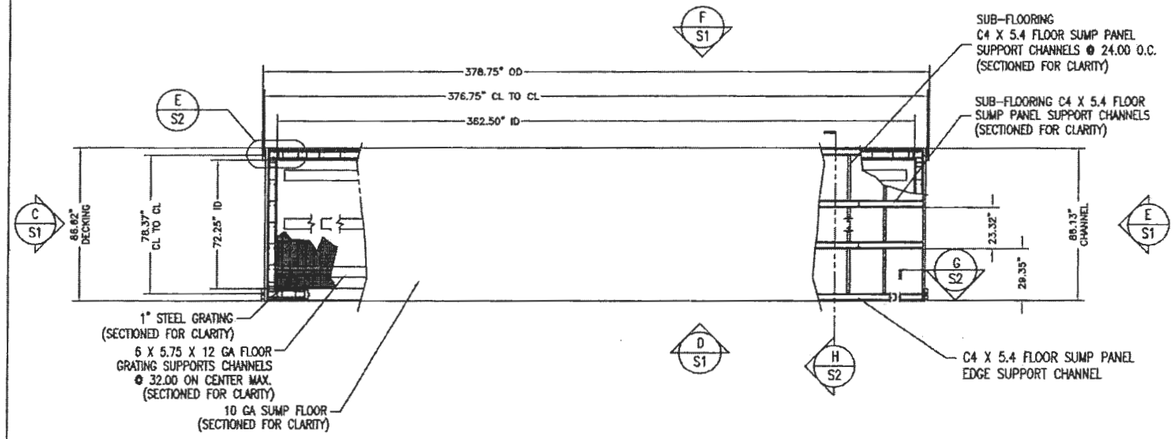

A FLOOR FRAMING PLAN
(SHEETROCK SHOWN IN THIS VIEW ONLY)

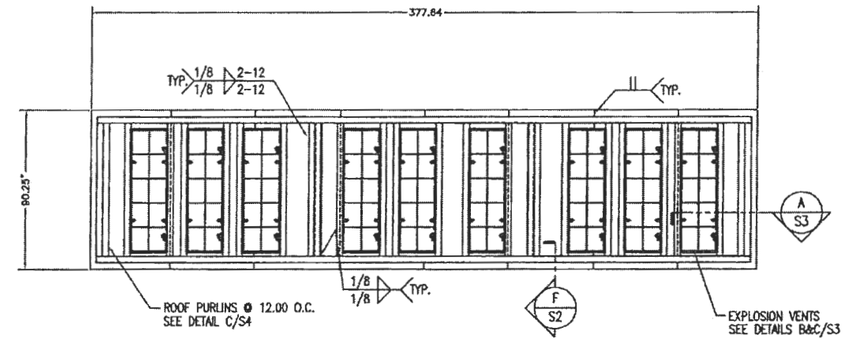

B ROOF FRAMING PLAN

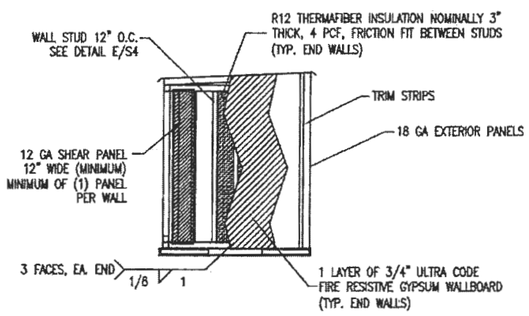

C LEFT SIDE WALL FRAMING PLAN

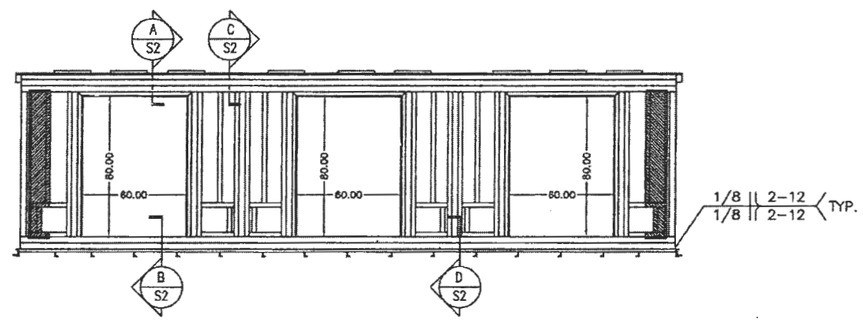

D FRONT WALL FRAMING PLAN

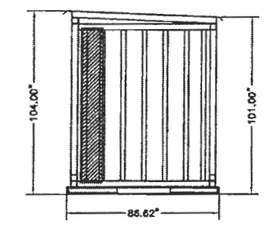

E RIGHT SIDE WALL FRAMING PLAN

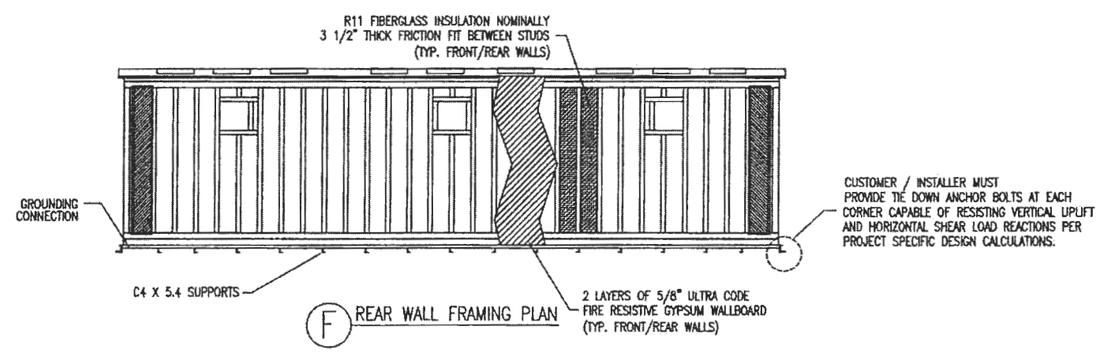

F REAR WALL FRAMING PLAN

DRAWN BY:	JGE
DATE:	02/24/14
REV	DATE

APPROVED
MAR 06 2014
T.R. ARNOLD & ASSOCIATES, INC.
Review of this document does not authorize or approve any omissions or deviations from the applicable requirements.

DURHAM HHW FACILITY
2115 EAST CLUB BLVD.
DURHAM, NC 27704

SSI MODEL: 3208FRE
SERIAL #: 24723

SAFETY STORAGE
855 N. 5TH STREET
CHARLESTON, IL 61920
PHONE: (217) 345-4422
FAX: (217) 345-4475

COPYRIGHT © 1996 BY SAFETY STORAGE, INC.
ALL RIGHTS RESERVED
THESE DOCUMENTS ARE NOT TO BE REPRODUCED FOR ANY PURPOSE, IN WHOLE OR IN PART, WITHOUT WRITTEN PERMISSION FROM SAFETY STORAGE, INC.

NORTH CAROLINA PROFESSIONAL SEAL 041071 ENGINEER EMMY M DOWDEN
2/27/14

STRUCTURAL FRAMING PLAN

S1

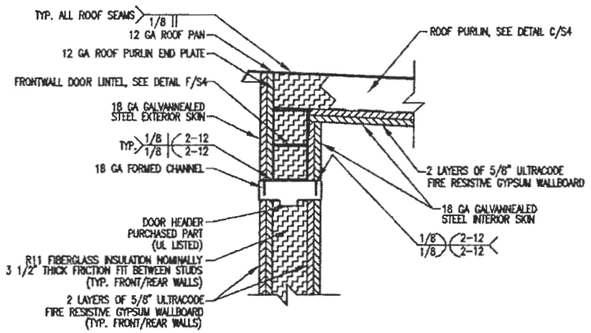

A DOOR LINTEL DETAIL

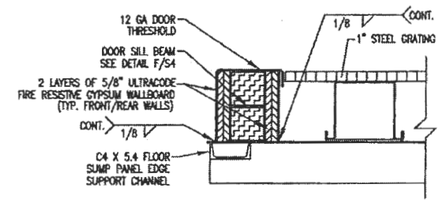

B FLOOR/DOOR SILL DETAIL

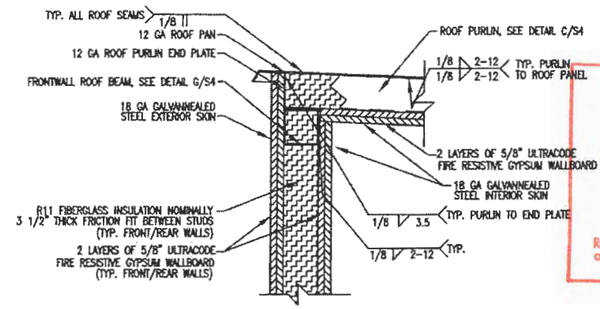

C FRONT WALL/ROOF DETAIL

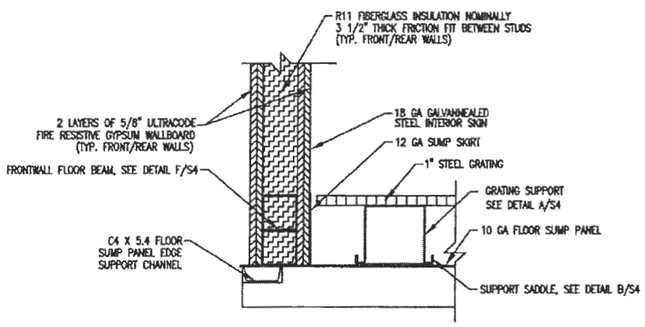

D FLOOR/WALL DETAIL

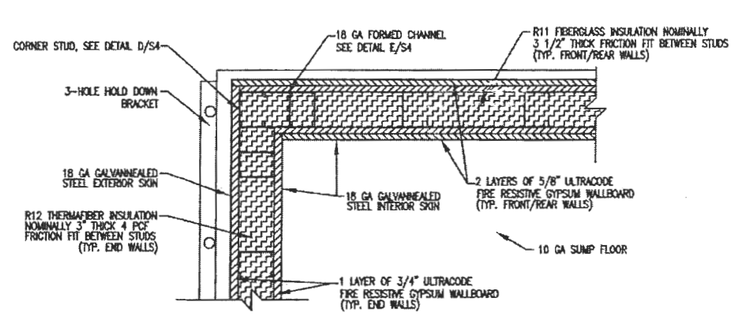

E WALL CORNER DETAIL

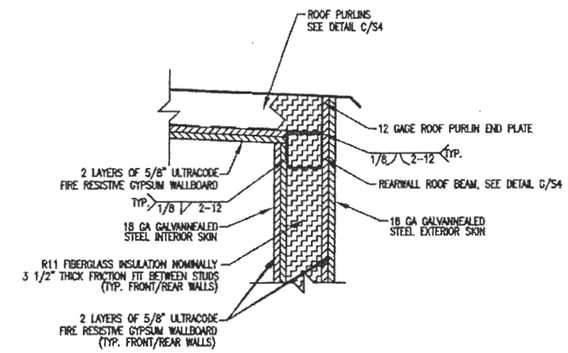

F REAR WALL/ROOF DETAIL

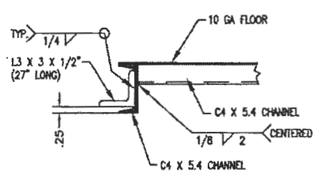

G HOLD DOWN BRACKET DETAIL

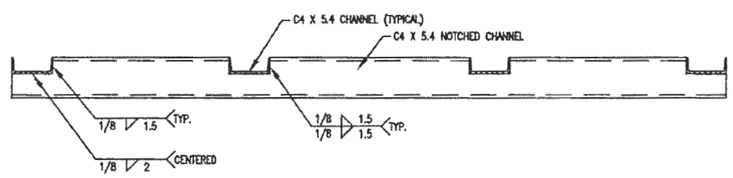

H FLOOR SUPPORT DETAIL

DRAWN BY:	JGE
DATE:	02/24/14
REV	DATE

APPROVED
MAR 06 2014
T.R. ARNOLD & ASSOCIATES, INC.
Review of this document does not authorize or approve any omissions or deviations from the applicable requirements.

DURHAM HHW FACILITY
2115 EAST CLUB BLVD.
DURHAM, NC 27704

SSI MODEL: 3208FRE
SERIAL #: 24723

SAFETY STORAGE
855 N. 5TH STREET
CHARLESTON, IL 61920
PHONE: (217) 345-4422
FAX: (217) 345-4475

COPYRIGHT © 1996 BY SAFETY STORAGE, INC.
ALL RIGHTS RESERVED
THESE DOCUMENTS ARE NOT TO BE REPRODUCED FOR ANY PURPOSE, IN WHOLE OR IN PART, WITHOUT WRITTEN PERMISSION FROM SAFETY STORAGE, INC.

NORTH CAROLINA PROFESSIONAL SEAL 041071 ENGINEER EMMY M DOWDEN
2/27/14

STRUCTURAL DETAIL

S2

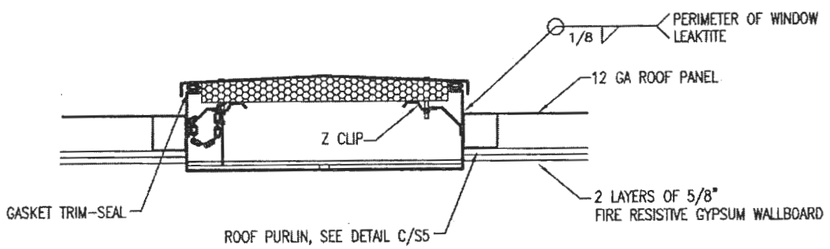

A EXPLOSION RELIEF VENT DETAIL

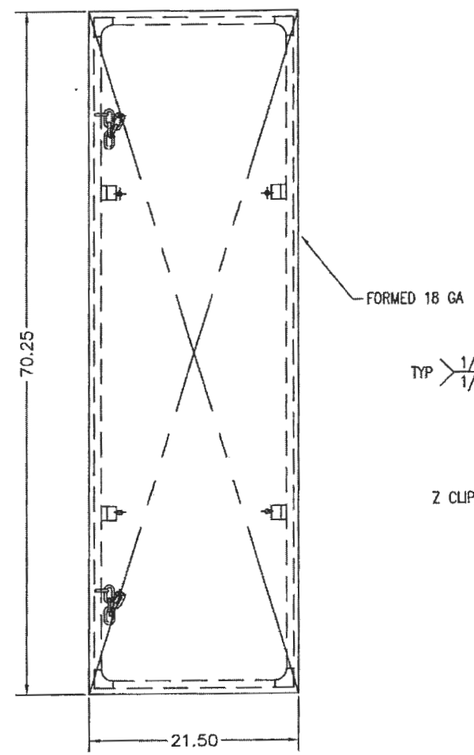

B EXPLOSION RELIEF VENT PANEL DETAIL

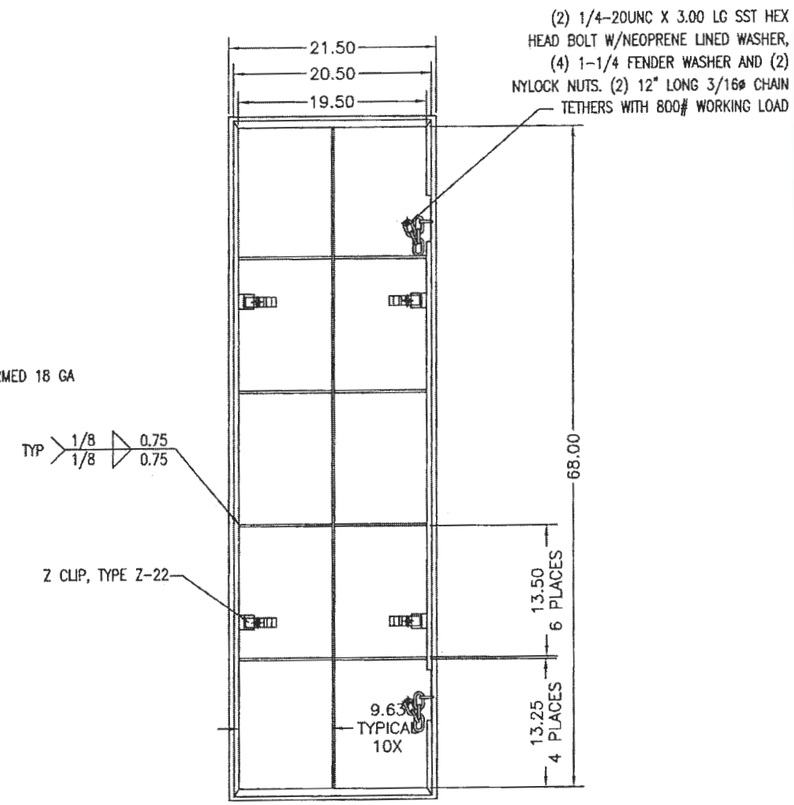

C EXPLOSION RELIEF VENT DETAIL

NORTH CAROLINA PROFESSIONAL SEAL 041071 ENGINEER EMMY M DOWDEN

Emmy M Dowden 2/27/14

DRAWN BY:	JGE
DATE:	02/24/14
REV	DATE

APPROVED
Sohan Silen
MAR 06 2014
T.R. ARNOLD & ASSOCIATES, INC.
Review of this document does not authorize or approve any omissions or deviations from the applicable requirements.

DURHAM HHW FACILITY
2115 EAST CLUB BLVD.
DURHAM, NC 27704

SSI MODEL: 3208FRE
SERIAL #: 24723

SAFETY STORAGE
855 N. 5TH STREET
CHARLESTON, IL 61920
PHONE: (217) 345-4422
FAX: (217) 345-4475

COPYRIGHT © 1996 BY SAFETY STORAGE, INC.
ALL RIGHTS RESERVED
THESE DOCUMENTS ARE NOT TO BE REPRODUCED FOR ANY PURPOSE, IN WHOLE OR IN PART, WITHOUT WRITTEN PERMISSION FROM SAFETY STORAGE, INC.

STRUCTURAL DETAILS

S3

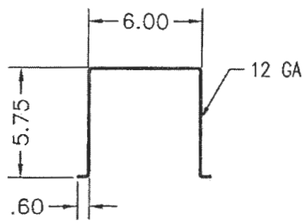

A FLOOR SUPPORT

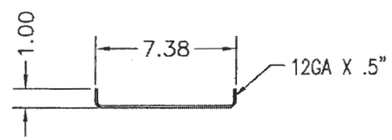

B FLOOR SADDLE

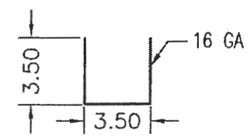

C ROOF PURLIN

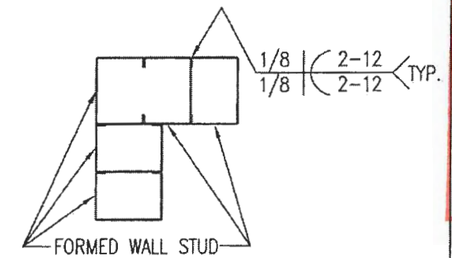

D CORNER STUD DETAIL

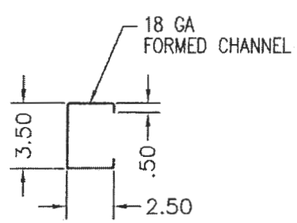

E FORMED WALL STUD DETAIL

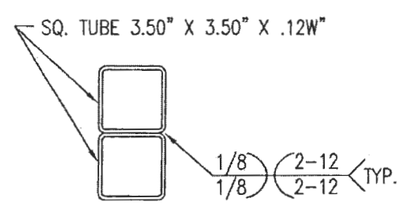

F FRONT FLOOR BEAM
DOOR LINTEL/DOOR SILL BEAM

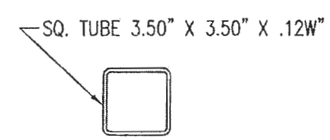

G FRONT/REAR ROOF BEAM

NORTH CAROLINA PROFESSIONAL SEAL 041071 ENGINEER EMMY M DOWDEN

2/27/14

DRAWN BY:	JGE
DATE:	02/24/14
REV	DATE

APPROVED
MAR 0 6 2014
T.R. ARNOLD & ASSOCIATES, INC.
Review of this document does not authorize or approve any omissions or deviations from the applicable requirements.

DURHAM HHW FACILITY
2115 EAST CLUB BLVD.
DURHAM, NC 27704

SSI MODEL: 3208FRE
SERIAL #: 24723

SAFETY STORAGE
855 N. 5TH STREET
CHARLESTON, IL 61920
PHONE: (217) 345-4422
FAX: (217) 345-4475

COPYRIGHT © 1996 BY SAFETY STORAGE, INC.
ALL RIGHTS RESERVED
THESE DOCUMENTS ARE NOT TO BE REPRODUCED FOR ANY PURPOSE, IN WHOLE OR IN PART, WITHOUT WRITTEN PERMISSION FROM SAFETY STORAGE, INC.

STRUCTURAL DETAILS

S4

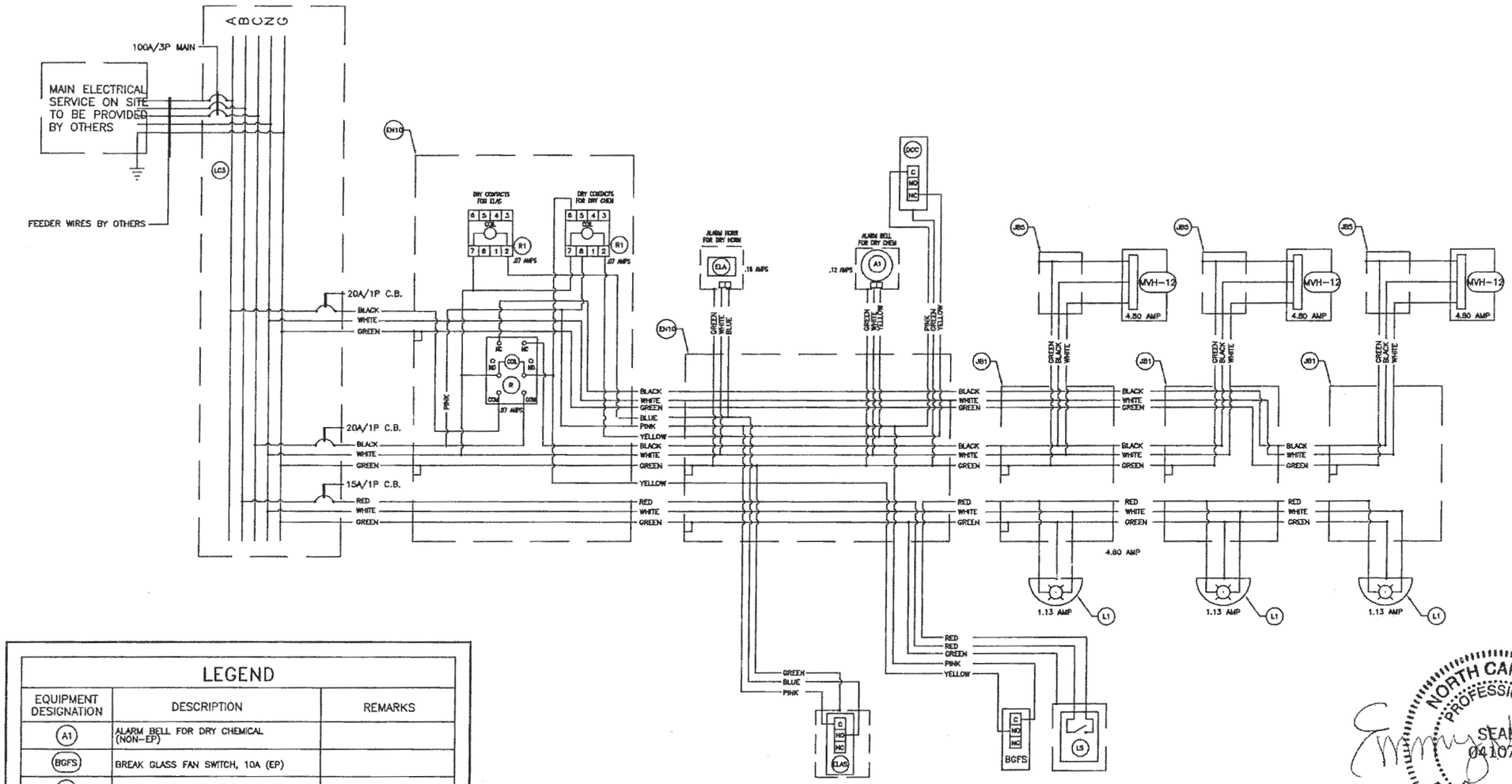

LEGEND		
EQUIPMENT DESIGNATION	DESCRIPTION	REMARKS
A1	ALARM BELL FOR DRY CHEMICAL (NON-EP)	
BGFS	BREAK GLASS FAN SWITCH, 10A (EP)	
DCC	DRY CHEMICAL MINIATURE SWITCH	
ELA	EMERGENCY LOCAL ALARM (NON-EP)	
ELAS	EMERGENCY LOCAL ALARM SWITCH (EP)	
EN10	10" x 10" x 4" NEMA 3R ENCLOSURE	
JB1	JUNCTION BOX WITH 1/2" HUBS	
JB5	JUNCTION BOX WITH 3/4" HUBS	
L1	LIGHT FIXTURE W/135 WATT BULB (EP)	
LC3	NEMA 3R CIRCUIT BREAKER LOAD CENTER 3 PHASE, 4 WIRE, 120/208VAC, 125 AMP	BOLT-IN BREAKERS
LS	LIGHT SWITCH, 20A (NON-EP)	NEMA 4X
MVH-12	MECHANICAL VENTILATOR, 12", INTERIOR HIGH MOUNT, 450 CFM FAN, (EP)	
R	GENERAL PURPOSE RELAY	
R1	RELAY DP DT	

RELAY SCHEMATIC/ELECTRICAL DATA

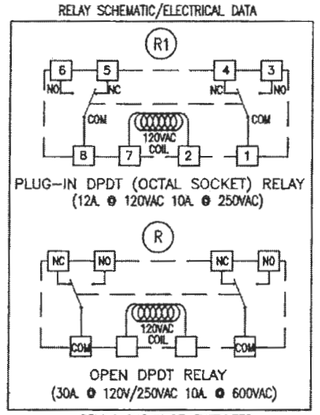

RELAYS SHOWN DE-ENERGIZED

ALL ELECTRICAL EQUIPMENT AND WIRING WITHIN CLASS I, DIVISION 1 LOCATIONS IN THIS BUILDING SHALL BE INSTALLED AND LISTED IN ACCORDANCE WITH THE NEC REQUIREMENTS FOR THAT CLASSIFICATION.

208Y/120 VAC 3 PHASE

AMP / KVA LOAD	
MAX LINE AMPS	10.09
TOTAL KVA LOAD	2.20

NOTES: UNLESS OTHERWISE SPECIFIED;
1. ALL WIRE IS THHN INSULATED
2. ALL WIRE IS 12 AWG
3. ALL WIRE IN 1/2" IMC CONDUIT (INTERIOR)
4. ALL WIRE IN 1/2" IMC CONDUIT (EXTERIOR)

ALL WIRING FIXTURES AND EQUIPMENT TO BE UL, cUL, OR CSA LISTED OR LABELED.

DRAWN BY:	JGE
DATE:	02/24/14
REV	DATE

APPROVED
MAR 06 2014
T.R. ARNOLD & ASSOCIATES, INC.
Review of this document does not authorize or approve any omissions or deviations from the applicable requirements.

NORTH CAROLINA PROFESSIONAL SEAL 041071 ENGINEER EMMY M DOWDEN
2/27/14

DURHAM HHW FACILITY
2115 EAST CLUB BLVD.
DURHAM, NC 27704

SSI MODEL: 3208FRE
SERIAL #: 24723

SAFETY STORAGE
855 N. 5TH STREET
CHARLESTON, IL 61920
PHONE: (217) 345-4422
FAX: (217) 345-4475

COPYRIGHT © 1996 BY SAFETY STORAGE, INC.
ALL RIGHTS RESERVED
THESE DOCUMENTS ARE NOT TO BE REPRODUCED FOR ANY PURPOSE, IN WHOLE OR IN PART, WITHOUT WRITTEN PERMISSION FROM SAFETY STORAGE, INC.

WIRING DIAGRAM

E

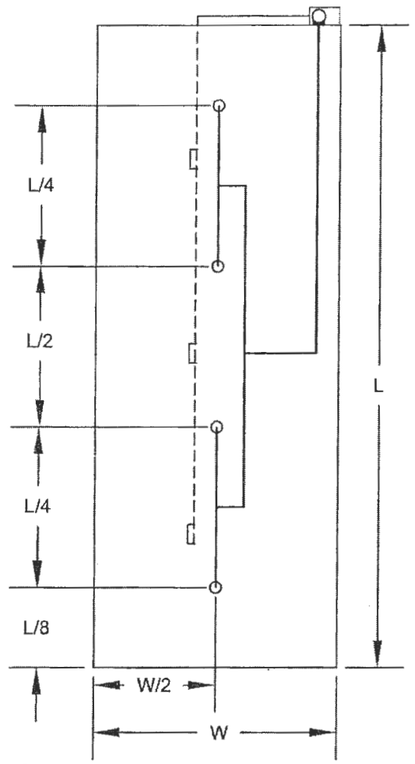

PLAN VIEW OF NOZZLE LOCATION

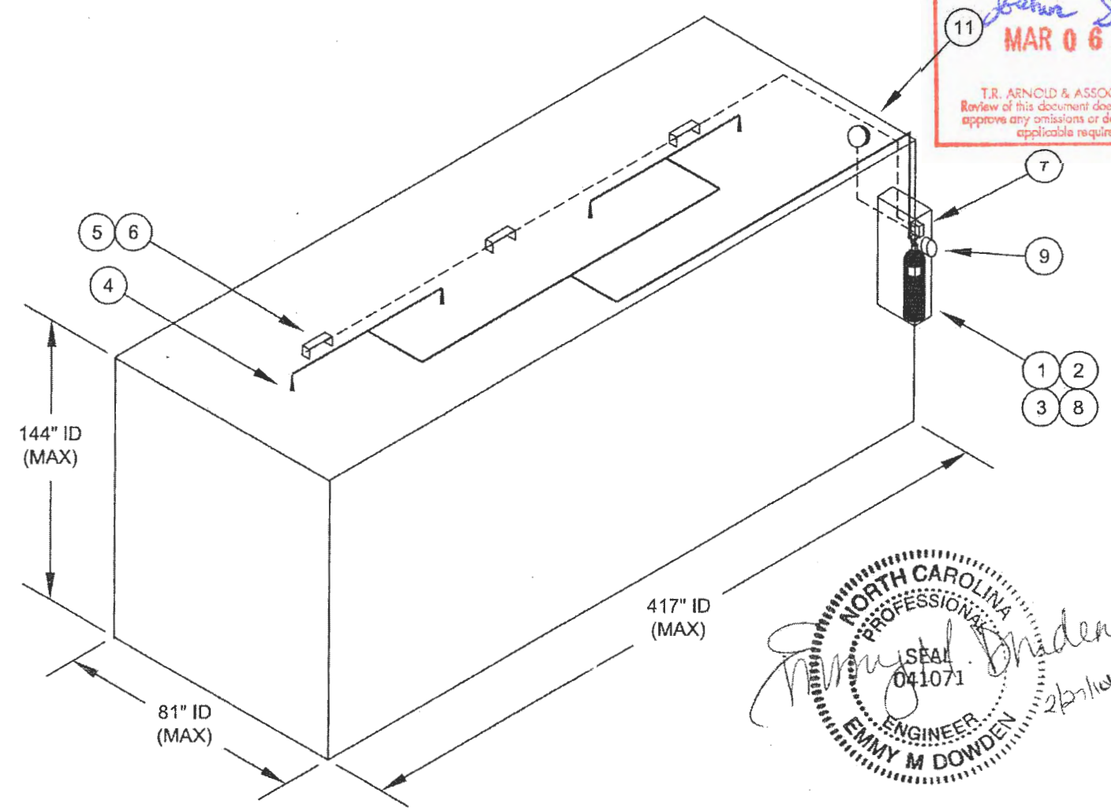

APPROVED
MAR 0 6 2014
T.R. ARNOLD & ASSOCIATES, INC.
Review of this document does not authorize or approve any omissions or deviations from the applicable requirements.

NORTH CAROLINA PROFESSIONAL SEAL 041071 ENGINEER EMMY M DOWDEN 2/27/14

GENERAL NOTES:

1. SYSTEM DESIGN AND INSTALLATION TO BE IN ACCORDANCE WITH NFPA 17, AND KIDDE FIRE SYSTEMS MANUAL P/N WK-220423-000.
2. AGENT CYLINDER TO BE LOCATED OUTSIDE OF HAZARD AREA IN A WEATHER PROTECTED ENCLOSURE. ALTERNATE LOCATIONS ACCEPTABLE WITHIN THE DESIGN PARAMETERS OF THE SYSTEM.
3. INSTALLATION AND SERVICE OF THE KIDDE FIRE SUPPRESSION SYSTEM SHALL BE PERFORMED BY KIDDE AUTHORIZED AND CERTIFIED COMPANIES ONLY.

APPLICABLE BUILDING MODELS

	3608STEEL		
	3608FS		3608FS/FR
	3608R		3608FS/-4FR
	3608-4FR		3608-4FS

REV.	DESCRIPTION	DATE	APP'D
CA	REVISED ITEM 7 PART NUMBER	1JUL13	KER
C	REVISED BOM, FORMAT TO 1 PAGE	12MAR13	KER
B	REVISED BOM, ADD QTY CALC		
A	INITIAL RELEASE	29MAY01	BDC

REVISIONS

ITEM	QTY	P/N	DESCRIPTION
1	1	83-486574-000	IND-45 ABC CYLINDER
2	1	82-486488-000	IND-45 MOUNTING BRACKET
3	1	83-844908-000	DISCHARGE ADAPTER KIT
4	4	83-100005-001	TOTAL FLOOD NOZZLE
5	3	60-120064-001	UNIVERSAL LINK HOUSING
6	3	WK-282662-000	KML-212 LINK, 212°F
7	1	87-120099-002	XV CONTROL SYSTEM
8	1	87-120042-001	SYSTEM VALVE ACTUATOR
9	1	87-120110-001	REMOTE PULL STATION
10	A/R	WK-844648-000	CORNER PULLEY
11	1	439D-6AW-R	6" VIBRATING BELL, OR EQUIVALENT

Kidde Fire Systems
400 MAIN STREET
ASHLAND, MA 01721
(508) 881-2000

THIS INFORMATION IS THE PROPERTY OF KIDDE FIRE SYSTEMS INC. IT IS SUBMITTED IN CONFIDENCE AND IS NOT TO BE DISCLOSED OR UTILIZED WITHOUT WRITTEN PERMISSION.

CUSTOMER: SAFETY STORAGE

PROJECT: MODEL 3608

AUTOMATIC KIDDE PRE-ENGINEERED FIRE SUPPRESSION SYSTEM FOR THE STORAGE SPACE

DRN: JSF 31JUL00	SIZE	DWG. NO.	REV.
CHK'D: MAP 22SEP00	B	L-674101	CA
ISSUED: BDC 28MAR01			
SCALE: NTS	UNITS: FEET-INCHES	SHEET: 1 OF 1	

CONCRETE

1. CONCRETE– Exterior concrete shall be air–entrained to 4–8%. Admixtures containing calcium chlorides shall not be added to the concrete. Concrete shall have a 28–day strength of 2,000 psi.
2. REINFORCING BARS– Reinforcing bars shall conform to ASTM A615, Grade 60. Lap splices shall be 20" in length for #4 bars unless otherwise noted.
3. REINFORCING MESH– Welded Wire Fabric (WWF) shall conform to ASTM A185 and shall be lapped a min. of 8" at splices.
4. CONCRETE SLABS– Slabs–on–grade shall be built over a 4" layer of #57 stone and over a 6 mil polyethylene vapor barrier, unless otherwise noted.
5. SUBGRADE FOR FOOTINGS– Footings shall bear on natural undisturbed soil or tested control fill with a min. allowable bearing capacity of 2000 pounds per sq. ft.
6. SUBGRADE FOR SLABS– Slab–on–grade shall bear on natural undisturbed soil or tested control fill with a min. allowable bearing capacity of 2000 pounds per sq. ft. If slabs–on–grade are less than 2'–0" above acceptable undisturbed soil, they may be constructed on up to 2'–0" of self–compacting aggregate, such as #57 stone, in lieu of tested control fill or being designed as structural slabs.
7. CONCRETE SLAB FINISHES– Concrete finish shall be Smooth–Trowel Class A (flat within 1/8" in 10'–0") for foundation pad.
8. CONSTRUCTION– Sawed crack controll joints shall be cut in concrete between 8 and 16 hours after concrete is placed.
9. SOIL BEARING CAPACITY– This illustrative example foundation design is is based upon an assumed minimum soil bearing capacity of 2000 psf.

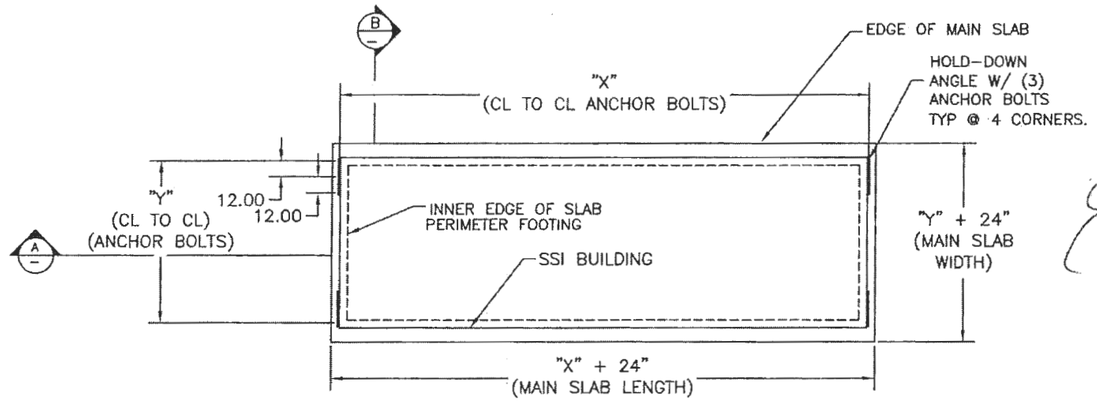

FOUNDATION PAD PLAN

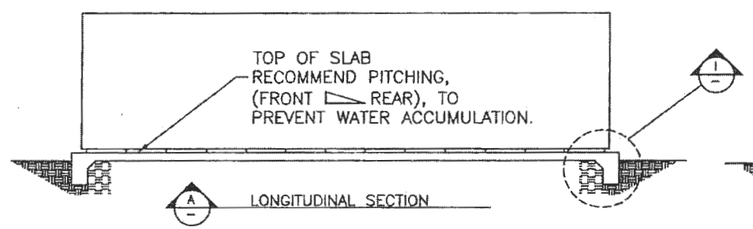

LONGITUDINAL SECTION

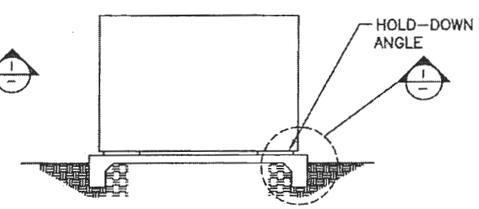

TRANVERSE SECTION

IT IS THE END USERS RESPONSIBILITY TO HAVE THE ANCHOR INSTALLATION AND PAD DESIGN DONE BY A PROFESSIONAL ENGINEER.

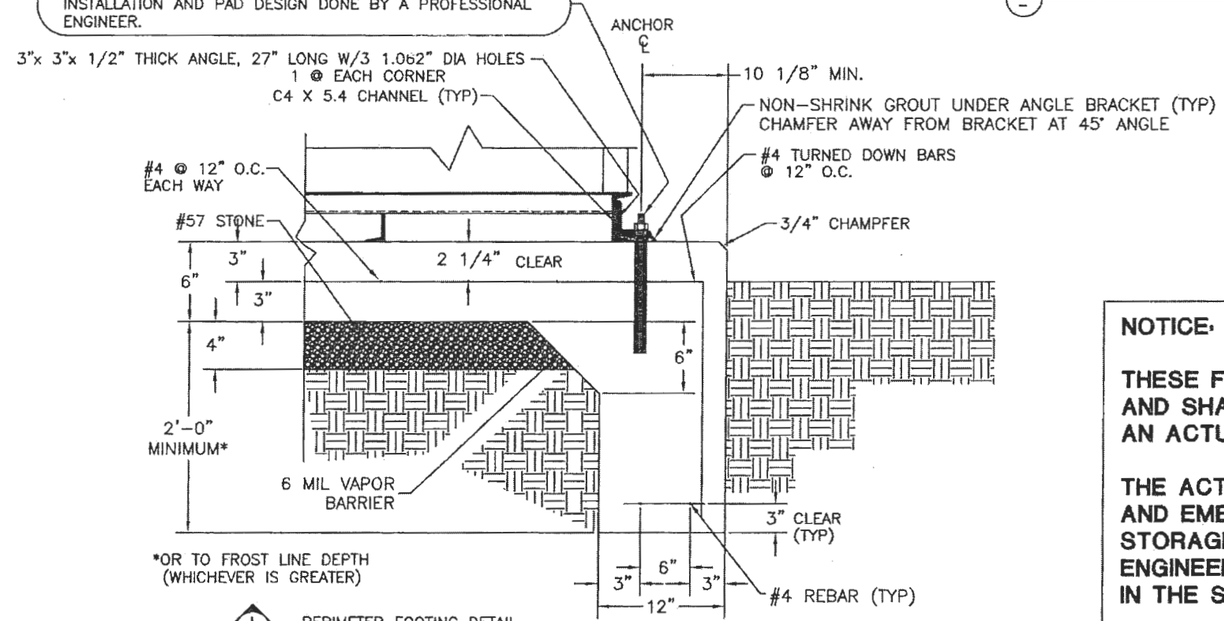

1 PERIMETER FOOTING DETAIL

NOTICE:

THESE FOUNDATION DETAILS ARE ILLUSTRATIVE ONLY, AND SHALL NOT BE USED AS A BASIS FOR CONSTRUCTION OF AN ACTUAL FOUNDATION.

THE ACTUAL FOUNDATION DESIGN, ANCHOR BOLT SIZE, AND EMBEDMENT IS NOT THE RESPONSIBILITY OF SAFETY STORAGE, INC., AND SHALL BE DESIGNED BY A PROFESSIONAL ENGINEER, HIRED BY THE OWNER OR CONTRACTOR, AND LICENSED IN THE STATE/PROVINCE WHERE THE BUILDING IS TO BE SITED.

NORTH CAROLINA PROFESSIONAL SEAL 041071 ENGINEER EMMY M DOWDEN

Emmy M Dowden 2/27/14

DRAWN BY:	JGE
DATE:	02/24/14
REV	DATE

APPROVED
John Siler
MAR 0 6 2014

T.R. ARNOLD & ASSOCIATES, INC.
Review of this document does not authorize or approve any omissions or deviations from the applicable requirements.

DURHAM HHW FACILITY
2115 EAST CLUB BLVD.
DURHAM, NC 27704

SSI MODEL: 3208FRE
SERIAL #: 24723

SAFETY STORAGE
855 N. 5TH STREET
CHARLESTON, IL 61920
PHONE: (217) 345–4422
FAX: (217) 345–4475

COPYRIGHT © 1996 BY SAFETY STORAGE, INC.
ALL RIGHTS RESERVED
THESE DOCUMENTS ARE NOT TO BE REPRODUCED FOR ANY PURPOSE, IN WHOLE OR IN PART, WITHOUT WRITTEN PERMISSION FROM SAFETY STORAGE, INC.

FOUNDATION GUILDLINES

F1

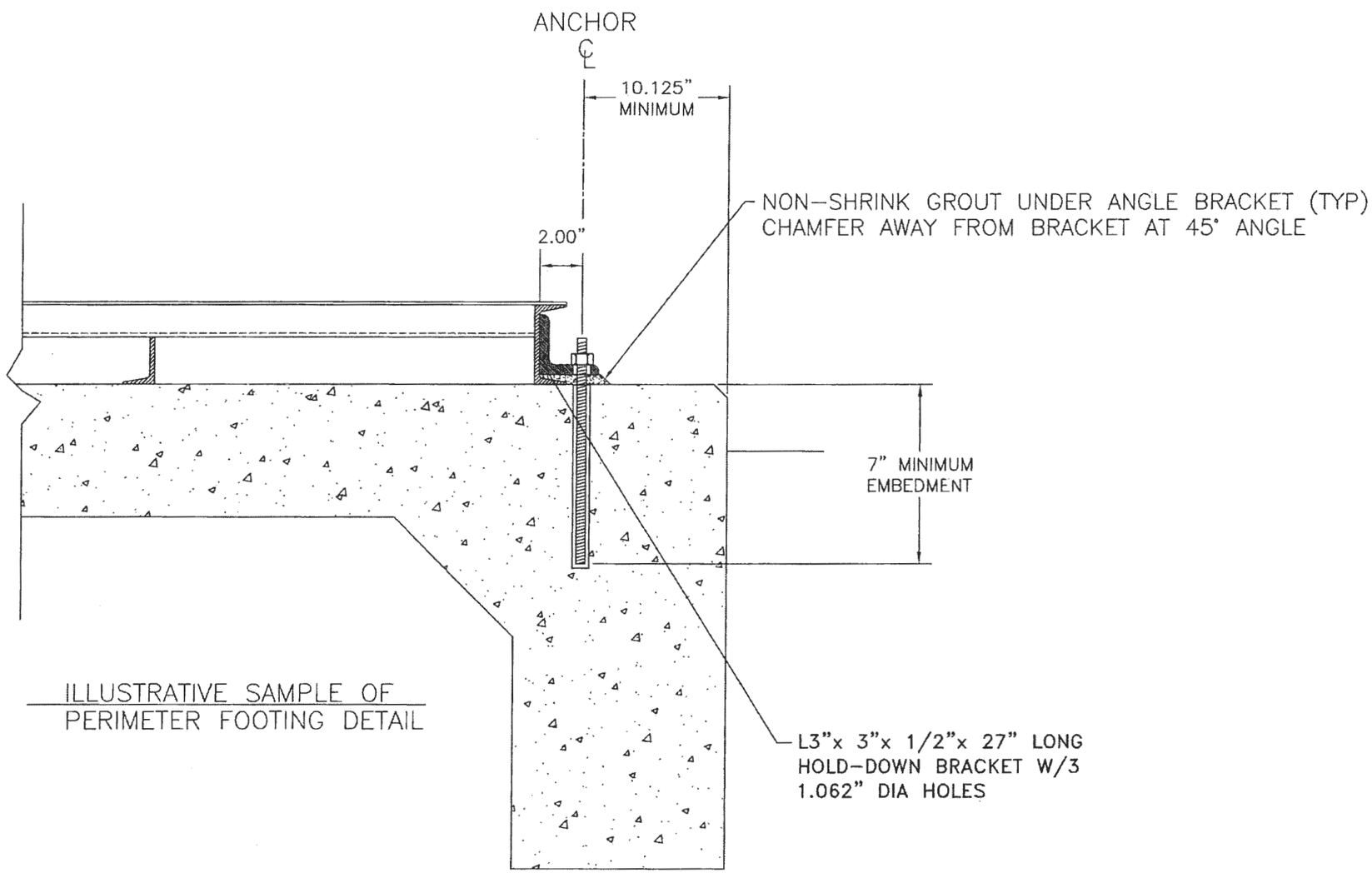

ILLUSTRATIVE SAMPLE OF
PERIMETER FOOTING DETAIL

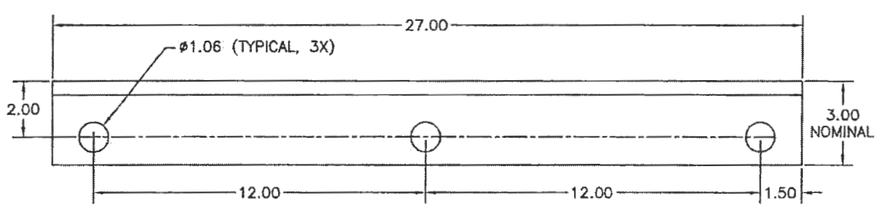

PLAN VIEW
ANGLE ANCHOR BRACKET

DRAWN BY:	JGE
DATE:	02/24/14
REV	DATE

APPROVED
MAR 0 6 2014
T.R. ARNOLD & ASSOCIATES, INC.
Review of this document does not authorize or approve any variations or deviations from the applicable requirements.

DURHAM HHW FACILITY
2115 EAST CLUB BLVD.
DURHAM, NC 27704

SSI MODEL: 3208FRE
SERIAL #: 24723

NORTH CAROLINA PROFESSIONAL SEAL 041071 ENGINEER EMMY M DOWDEN
2/27/14

SAFETY STORAGE
855 N. 5TH STREET
CHARLESTON, IL 61920
PHONE: (217) 345-4422
FAX: (217) 345-4475

COPYRIGHT © 1996 BY SAFETY STORAGE, INC.
ALL RIGHTS RESERVED
THESE DOCUMENTS ARE NOT TO BE REPRODUCED FOR ANY PURPOSE, IN WHOLE OR IN PART, WITHOUT WRITTEN PERMISSION FROM SAFETY STORAGE, INC.

FOUNDATION GUILDLINES

F2

MANUFACTURER'S DATA PLATE

Manufacturer: Safety Storage, Inc.
Address: 855 N 5th Street
City, State, Zip: Charleston, IL 61920

LISTED INDUSTRIALIZED BUILDING

Model	3208-FRE				
Occupancy Classification	H-2	Const. Class	II-B		
Manufacturer's Serial No(s).	24603				
Date of Manufacture		Plan Approval No.			
Date Data Plate Attached					
Permissible Gas Type(s)	N/A				
Electric Rating	208/120V 3 Phase 100A				
Test Voltage/Time	1500 Volts/1 Second				
Water Supply: Test Procedure	N/A				
Floor Design Live Load	500 PSF	Design Wind Speed And Exposure	130 MPH/Exp C		
Ground Snow Load	40 PSF	Roof Design Live Load	40 PSF		
Exterior Wall Fire Rating	2 Hr	Seismic Design Category	D		
Winter Design Temp.: Inside	N/A	Outside	N/A		
U_0: Ceiling	N/A	Wall .091		Floor	N/A

FACTORY INSTALLED EQUIPMENT

EQUIPMENT	MANUFACTURER	MODEL NO.
Heating	N/A	N/A
Cooling	N/A	N/A
Alarm Bell	Wheelock	43T-G6-115-R
Alarm Horn	Tork	TA 874-N5R
Int Light	Killark	EMI20
Fan Motor	Marathon Electric	056C17E15503
Max Mean Roof Height	104.5"	
NC Thermal Zone	4A	
	Date Final Plans Approved:	
Shipping Weight(s)	27,275#	
TRA Label No(s).	TBD	
State Insignia No(s).	TBD (NC)	

Follow precisely all instructions with this building. Foundations, Installation and Utility Connections are subject to inspection by local authorities.

CODE REFERENCE PLATE

THIS MANUFACTURED STRUCTURE HAS BEEN CONSTRUCTED IN CONFORMANCE WITH THE FOLLOWING CODES:

- ☐ NATIONAL ELECTRICAL CODE®
- ☐ INTERNATIONAL BUILDING CODE
- ☐ INTERNATIONAL MECHANICAL CODE
- ☐ INTERNATIONAL PLUMBING CODE
- ☐ INTERNATIONAL ENERGY CONSERVATION CODE
- ☐ INTERNATIONAL RESIDENTIAL CODE
- ☐ INTERNATIONAL FUEL GAS CODE
- ☐ INTERNATIONAL FIRE CODE
- ☐ UNIFORM BUILDING CODE
- ☐ UNIFORM PLUMBING CODE
- ☐ UNIFORM MECHANICAL CODE
- ☐ NATIONAL STANDARD PLUMBING CODE
- ☑ 2012 North Carolina Building Code
- ☑ 2012 North Carolina Mechanical Code
- ☑ 2011 North Carolina Electrical Code
- ☐
- ☐
- ☐
- ☑ Note to Local Inspection Department: If this structure is in a thermal zone more stringent than that listed on these plans, is set on
- ☑ pilings, or is installed at a mountain region or coastal high hazard site such that wind or other design parameters are increased, the design must
- ☑ be determined to be adequate for actual site conditions. Alterations may be required to bring the home into compliance with the more
- ☑ stringent conditions.

APPROVED
MAR 06 2014
T.R. ARNOLD & ASSOCIATES, INC.
Review of this document does not authorize or approve any omissions or deviations from the applicable requirements.