Gallins Family Farm

Application for a permit to operate a proposed small type 3 solid waste compost facility

APPROVED
DIVISION OF WASTE MANAGEMENT
SOLID WASTE SECTION
DATE 9/4/2015 BY Martin A. Gallagher

Doc ID 22584

Prepared in accordance with the N.C. Division of Waste Management rules and regulations.

Prepared September 2, 2015 by:
Peter M. Gallins &
Lyndsy Soltau
Gallins Family Farm
222 Rocky Dale Lane
Mocksville, NC 27028
(336) 407-0961
Farm@Gallins.com

Table of Contents

Intent of Application 4

Background 4

Site Location 4
- **Facilities** 5

Personnel 5
- **Facility Operator** 5

Waste Types 5
- **Straw/Hay:** 5
- **Chipped Wood:** 5
- **Food Waste:** 6
- **Table 1 : Feedstock Characteristics** 6

Equipment 7
- **CAT IT24F Integrated Toolcarrier** 7
- **Ford 4000 Tractor** 7
- **Custom Shaker Screening Unit** 7
- **Custom Bagger** 7
- **North Star 2500PSI Pressure Washer** 7
- **Case International Puma 130 CVT Tractor** 7
- **Midwest Biosystems PT 130 Aero Master Windrow Turner** 7

Site Methodology 7
- **Site Volume Capacity** 8
- **Site Soil** 8

Product and Service Liability 8
- **Vehicle and Driver Safety** 8
- **Heavy Machinery Safety** 8
- **Site Security** 9

Finished Compost Products 9
- **Pathogens** 9
- **Heavy Metals** 9

Environmental (Vectors, Weather, Odors, Etc.) 10
- **Odor Management Plan** 10
  - Receiving and tipping of raw feedstocks 10
  - Windrow Building 10
  - Windrow Composting 11
  - Finished Compost 11
  - General Operations 11
  - Monitoring 11
  - Buffer 12
- **Leachate** 12
- **Representative Sampling** 12

Equipment Breakdown 12

Record Keeping 13

Environmental Benefits 13

Marketing of Finished Compost 13

Published Resources 14

USDA Soil Survey 15

Site Map 34
- Site Map Detailed 2 35
- Site Map detailed 3 36
- Report on Facility Design 37
- Site Map Flood Plain 38
- Site Map Zoning 39
- Site Picture 1 40
- Site Picture 2 41
- Site Picture 3 42
- Site Picture 4 43
- Site Picture 5 44

Concrete Basin Engineer Drawing 45
- Concrete Basin Leak Test 46

Site Soil Analysis 47

Site Property Deed 57

Intent of Application

Gallins Family Farm (GFF) composting program has been operating under the NC DWM composting pilot program since 2011. The intent for this application is for GFF to be granted a small Type 3 solid waste compost facility permit allowing the continuation of the current operation.

Background

Peter Gallins, founder of Gallins Family Farm (GFF), completed his Bachelor of Science in Agriculture with minor degrees in soil science, entomology, and agricultural economics at the University of Wyoming 2010'. Peter founded GFF in May 2011' offering food waste recycling services to food service companies such as, restaurants, primary/secondary schools, corporations, grocery stores, and universities. In February 2012', Peter began selling his compost, classified Grade A, under the brand 'Carolina Dynamite.'

In December 2012', Peter Gallins moved his operation from Greenbrooke Farm in Forsyth County to a parcel of land in Davie County to meet the growing demand of food waste recycling. The Davie site has been in full operation since January 2013'. The new site allows GFF to mature into a diversified agricultural operation offering food waste recycling, Carolina Dynamite, and other farm products to the public. GFF is well positioned to continue building long lasting private-sector capacity to divert food waste from the waste stream and create NC jobs, while helping large manufacturers achieve zero-waste-to-landfill goals.

Site Location

The compost site is located in Davie County on a parcel of the Gallins Family Farm. The farm is owned by Peter Gallins and family.

Site Address: 222 Rocky Dale Lane
Mocksville, NC 27028

A county map showing the composting site on an aerial photograph, where one inch is less than or equal to 400 feet, accurately showing the area within one-fourth mile of the proposed site's boundaries can be found in this document on page 34. A map with the location of all homes, wells, industrial buildings, public or private utilities, roads, watercourses, dry runs, and other applicable information regarding the general topography within 500 feet of the proposed facility can be found on page 35. The proposed site is zoned as RA- Residential Agriculture, a map showing this zoning can be found on page 39.

Facilities

Facilities used for the composting operation include the Gallins Family Farm.

Gallins Family Farm
222 Rocky Dale Lane
Mocksville, NC 27028
86 acre site with the following improvements:

- 52'x105' mixing shed with 6" concrete pad and leachate collection system
- 18x40' equipment shed
- Office

Personnel

GFF is operated under the leadership of Peter Gallins, Lyndsy Gallins, and Matthew Polivka. Peter will manage the operation and production systems, operate the composting facility, and perform day-to-day tasks. Lyndsy Gallins will provide customer service, handle accounts, and ensure GFF meets or exceeds all regulations. Matthew Polivka will operate GFF vehicles to collect food waste and perform day-to-day tasks. Accounting support will be performed by Scarlett Parrish and management support will be offered from the Gallins management team which includes Matthew G. Gallins, and Vaughan Gilmore.

Facility Operator

Peter M. Gallins
222 Rocky Dale Lane
Mocksville, NC 27028
(336) 407-0961

Waste Types

GFF currently recycles food waste, wood waste, and rotten/wet straw.

Straw/Hay:
Greenbrook Farm & surrounding farms in Forsyth, Davie and Yadkin County.

Chipped Wood:
Abbey Green, INC.
5030 Overdale Road
Winston-Salem, NC 27107

City of Clemmons Mulch Yard

Area tree removal/utility companies
Myers Wood Products

Food Waste:
Wake Forest University
R.J. Reynolds Tobacco Company Cafeterias
Hanesbrands, Inc.
Forsyth Country Day School
Canteen
Salem College and Academy
North Carolina School of the Arts
Unifi
Freightliner
BE-Aerospace
Catawba College
Summit School
Daimler Freightliner Trucks
The Fresh Market
VF Jeanswear
Bank of America
Thomas Built Busses

The Following table describes general feedstocks characteristics, expected yearly amounts, C:N, moisture, degradability speed, and bulk density

Table 1 : Feedstock Characteristics

Ingredient	C:N Ratio	Moisture	Degradability	Treatment	Yards Processed Annually	Type	Bulk Density lbs/yard
Coffee Grounds	20	Medium-High	Medium	-	150	2	950
Food Waste Pre-Consumer	15	High	High	Bulking Agent	825	2	850
Food Waste Post Consumer	10-15	High	High	Bulking Agent	145	3	1000
Straw/Barley Pulses	45-50	Dry	High	-	As necessary	1	750
Wood Waste	60	Low	Low	Moisture	As necessary 250+		400
Yard Waste	-	Medium	Medium	-	450	1	500
Total					**1820**		

Equipment

CAT IT24F Integrated Toolcarrier

Engine 105 hp
Displacement 268.5 in3
Operating Weight 22021.95 lb
Bucket Size 2.4 Yards

Ford 4000 Tractor

Engine 55 hp
Drawbar 41 hp
PTO 46 hp
Operating Weight 3,400 lb

Custom Shaker Screening Unit

Engine 1.5 hp
Size 4'x7'
Operating Weight 200 lb
Production Speed 60 yards/hour

Custom Bagger

Engine 4 hp
Hopper size 4 cubic yards
Production speed 40 sec/bag

North Star 2500PSI Pressure Washer

Case International Puma 130 CVT Tractor

Engine 131 hp
Drawbar 98.4 hp
PTO 134.6 hp
Operating Weight 13,600 lbs

Midwest Biosystems PT 130 Aero Master Windrow Turner

Production Capacity 8,000 tons of finished compost per season
Rated Capacity 1,613 cubic yards per hour

Site Methodology

GFF manages incoming organic waste using the windrow composting process. A wheel loader is used for turning, mixing and handling. GFF thoroughly mixes and blends incoming feedstock materials within 24 hours of receiving to minimize odors and control vector related issues. All mixing is performed on a concrete pad with leachate collection. Feedstocks are measured and proportioned by the number of loader buckets. After creating the initial pile, temperatures rise into the composting range of 120-140 degrees F and piles are formed into windrows 11' high and 6' wide. Windrows are turned 2-3 times

per week with a windrow turner. Material is contained on the concrete pad under roof for approximately 2-3 weeks while moisture is reduced and temperatures rise into the composting range. The PFRP is preformed on the concrete under roof.
We do not grind any feedstocks that come in to our site out of concern for reducing the size of non-conforming waste and making it harder to detect and extract. By keeping the non-conforming waste in larger forms, the unwanted waste is more easily screened out over time.

The composting cycle, from beginning to end, takes approximately 5 months. The composting cycle ranges from 80-90-days while the curing period ranges from 50-60-days. After the final curing period, compost is screened to less than 3/8" as needed for sale and delivery. Oversized finished compost is picked over for non-conforming waste and mixed with raw feedstocks as needed to absorb moisture and jumpstart the composting process through inoculation of fungi and bacteria.

Site Volume Capacity

The GFF 2 acre site estimated volume capacity is 3,853 cubic yards of feedstocks per year. The site volume capacity was calculated based on 11' wide and 6' high windrows 200' long with 15' spacing between windrows. GFF operates under a 80-90-day composting cycle and a 50-60-day curing period. 11 x 6

Site Soil

Gallins has provided a 2 custom soil resource reports for the Gallins Farm site. The first report was obtained from the USDA & NRCS soil survey and can be found at the end of this document. The second report was preformed by Carolina Environmental Consultants and can also be found at the end of this document. Both reports indicate our site soil is well drained and at least more than 48" to the water table.

Product and Service Liability

GFF's goal is to deliver high quality, efficient customer focused service. GFF has identified potential product and service liabilities and implemented mitigation objectives to manage those liabilities. GFF operates in accordance with best management practices promulgated by the state of North Carolina.

Vehicle and Driver Safety

The primary responsibility of the driver is to operate a motor vehicle safely. The task of driving requires full attention and focus. Gallins drivers are required to have a current U.S. driver's license. Gallins drivers are not to engage in any activity that takes their eyes and attention off the road. Cell phones and other devices are not to be used while driving.

Heavy Machinery Safety

All persons involved with composting activities utilizing heavy equipment will undergo training procedures to ensure safety of personnel. Equipment will be locked, with hydraulic attachments in the lowest position when not in use to prevent accidental injury.

Site Security
Fences will be utilized to exclude pests, animals and thieves.
Finished Compost Products
Finished compost material will be tested to ensure compliance with all federal, state, and local laws. A representative sample of all finished compost will be collected and tested a minimum of 2 times per year. Testing includes C:N ratio, macronutrients, micronutrients, and heavy metals which is completed by North Carolina Department of Agriculture & CS. A&L Great Lakes Lab completes the testing for pathogens. GFF completes the testing for foreign material.

Pathogens
To make sure our compost meets process to further reduce pathogens (PFRP), we use a 36-inch Reo-Temp thermometer to take temperatures. Following the guidelines set out by the state, we meet and exceed the 15-day requirement for PFRP. We turn piles 2-3 times per week meeting the required 5 flips in 15 days at or above 131 degrees F. During this time we also monitor odors and moisture of our piles. The moisture monitoring is a visual test at the starting stage and hand test in the field.

In accordance with the EPA's PFRP, representative samples are tested from finished compost to insure that the amount of fecal coliform is less than 1,000 most probable numbers (mpn) per gram.

To prevent cross contamination and reintroduction of pathogens, GFF sanitizes hand tools, loader buckets, and thermometers. For sterilization a 200ppm bleach solution is used.

Heavy Metals
Representative samples will be taken from feedstock materials for testing of heavy metal concentrations. No material with significant heavy metal concentration will be accepted.

Foreign Material - Non-conforming waste *(ie: glass, plastic, ceramics, metal)*
GFF receives some non-conforming waste inside their compost receptacles. Non-conforming waste includes; metal, plastic, glossy paper products, and other non-compostable materials. To achieve a high quality finished compost, Gallins is diligent in removing non-conforming wastes from our site and at the collection site. No grinding of potential contaminated feedstock materials is done on the GFF site to ensure non-conforming waste remains the largest size possible for extraction.

1. GFF informs generators of the importance of non-conforming wastes and teaches them how to separate organics and remove nonconforming material at their source and site. Gallins implements a consistent and frequent training program to decrease and/or eliminate non-conforming waste in collection receptacles.
2. To further address product liability, GFF performs a secondary non-conforming waste removal when feedstocks arrive on site and are mixed into windrows.
3. Removal during the turning, drying and curing stages. When windrows are turned, any non-conforming waste on the surface or surrounding area of the windrows will be removed.

4. Removal while screening finished product to 3/8" or less. The finished material will be screened and any non-conforming waste will be removed and properly discarded.

Environmental (Vectors, Weather, Odors, Etc.)
GFF composting operation dedicates time and resources to minimize undesirable environmental conditions on site. Undesirable conditions include dust, vectors, and odors. In the event of dust problems, Gallins will wet roads, windrows, staging areas, trucks, and any other areas or equipment. Water is available on site and throughout the property. Pest related problems will be addressed by utilizing IPM, integrated pest management. IPM strategies include eliminating pests by preventing entry with fences and other means, eliminating food sources, and disrupting life cycles (insects) mechanically and effective chemical controls.

Odor Management Plan

Composting odors occur from the breaking of chemical bonds of the original materials through heat and bacterial enzymes. Odors are a mix of several volatile compounds that will form and decay without ever leaving the pile. Odors are a part of the food chain for microbes and they are subjectively offensive but manageable. GFF will manage odors by the following plan.

Receiving and tipping of raw feedstocks

- Food waste is collected frequently to decrease residence time in collection containers. This should reduce the time available for feedstocks to decompose anerobiclly and generate odors.
- Feedstocks will be unloaded during optimal times to avoid potential odors migrating off-site.
  Example: such as not after 5pm, not on weekends or, holidays, etc.
- Feedstocks will be examined for intensity of odor and managed accordingly. For example: adding sawdust during collection or increasing the frequency of collection.
- Semi-liquid and liquid feedstocks will be managed with available dry carbon in order to absorb potential odors as soon as possible.
- Raw feedstocks will be mixed and incorporated daily as they are tipped on the receiving pad.

Windrow Building

- Windrows are created daily as material is brought onsite and unloaded.
- Windrows are built with sufficient bulking material to meet optimal moisture, bulk density and C and N ratios.
- Windrows are built as material is brought onsite on top of carbon type material to increase air flow.
- Initial composting parameters:
  - Bulk Density= <1,000 lbs per cubic yard

Initial

    - Porosity/Free Air Space: 50%
    - Moisture: 50%
    - pH: 6-7.5
- Windrows will be covered with wood chips, finished compost, or sawdust to temporarily control odors.
- Windrows under roof will be covered with carbon type material after initial mixing and windrow building

Windrow Composting

- Windrows will be turned during the optimal time of day, 8am-1pm.
- Windrows will be turned when wind direction is opposite of receptors.
- Water can be added on top of windrow prior to turned to minimize dust and odor.
- Windrows will be turned as often as possible during the first week, 3-5 times per week.
- Windrows will be turned to meet PFRP
- Windrows will be turned if temperature begin to exceed 160 degrees F to avoid potential spontaneous combustion.
- Windrows will be turned if core temperature drop below those near the surface.
- Moisture will be added as needed during the turning process
- If needed, apply finished compost over the crown to reduce odors

Finished Compost

- Finished compost will be transported during optimal weather conditions
- Finished compost will be screened during optimal weather conditions
- Finished compost will be bagged during optimal weather conditions

General Operations

- Identify prevailing winds and potential odor emission sources
- Cover puddles and or process water with available carbon
- Manage site to avoid standing water

Monitoring

- Monitor weather using National Oceanic and Atmospheric Administration data
- If odor complaints arise then:
    - The following information will be gathered and recorded
        - Complainant name
        - Address
        - Location of odor
        - Description of odors
        - Description of terrain features of the area

        - Weather Data

- If odors present then:
    - Investigate: drive around areas downwind of the facility during operational hours and document odors observed, document other potential odor-emitting sources nearby.
    - Alert
    - Off-Site Impacts
    - Remedies: Contact any sensitive neighbors and request schedule of special events ie: home ball games, large gatherings, etc.
    - Document

Buffer

- A 360 degree vegetative buffer of a minimum of 100' thick will be maintained. Approximately 25 acres of surrounding the Gallins Farm are comprised of forest on the property margins.
- To compensate for land clearing actives associated with new high school construction 600 trees were planted on the Gallins Farm along property line in February 2015.

Leachate

GFF has constructed an impermeable concrete pad with concrete catch basin, all underneath a roof system. All wastewater leachate from composting activities on the concrete pad is redistributed onto actively composting windrows, any excess is sent to waste water treatment. Leachate is not added to piles after PFRP, eliminating the risk of inoculating pathogens. Leachate is collected in a 2,000-gallon holding tank under roof, on a concrete pad with secondary containment. Secondary containment storage capacity is 750-Gallons.

To maintain zero-discharge of leachate from the composting site a 250-foot vegetative filter strips consisting of fescue and orchard grass is down slope from the site. Storm water is controlled to flow away from composting activities and avoid interception with compost material. The storage area is prepared in such a manner that water does not collect around the base of the stored material.

Representative Sampling

When sampling compost for any number of laboratory parameters, a representative sample of compost will be obtained by the following method.
First, a soil auger will be used to extract compost cores every 6 feet, the cores will then be placed into a sterile 5 gallon bucket mixed thoroughly and finally, a sample will be taken from the bucket for testing. This sample is the representative sample for that particular pile.

Equipment Breakdown

Gallins currently has access to 1 front-end loader located on Gallins Family Farm. The front end loader is fully operational. In the event of breakdown, equipment will be

repaired as soon as possible. In the event of long term breakdown, Gallins will rent the necessary equipment to maintain the flow of materials and continue composting operations.

Record Keeping

Paperwork used to monitor the composting process is stored on the site. Volume monitoring paperwork is stored inside the collection vehicle. As paperwork is completed it is moved to the office for entry into spreadsheets and then filed for future reference. Records include daily operations, the quantity and type of composting ingredients received, the quantity and quality of finished compost, and all of the pre and post compost test results. All records are available to official personnel.

Environmental Benefits

GFF's composting operation is a positive environmental factor for the state of North Carolina and the Piedmont Triad Community. Diversion of food waste from area landfills accomplishes several key environmental benefits.
1. Protection of water quality resources by removing liquid laden organic waste from the landfill.
2. Extending the life of landfills by removing significant volumes of organic waste.
3. Reduce greenhouse gas emissions as methane associated with landfills and the anaerobic decomposition of organic waste within landfills.
4. Diversifying the recycling infrastructure in the Triad community to help large manufacturers achieve zero-waste-to-landfill goals.

Additional environmental benefits will occur when compost is applied to soil.
1. Carbon will be stored in the soil as soil organic matter.
2. Soil physical, chemical and biological properties are improved for crop growth.
3. Compost is an organic fertilizer as an alternative to synthetic fertilizers derived with fossil fuels.
4. Compost provides erosion control, weed control and degrades organic compounds such as petroleum.

Marketing of Finished Compost

GFF is currently supplying multiple markets with bagged compost. The compost is sold under the name Carolina Dynamite as a Grade-A Compost. Carolina Dynamite is sold by the bag and truck load when larger quantities are available. Currently, GFF cannot meet all the demand for Carolina Dynamite.

Carolina Dynamite can be found at the following locations:
1. LA Reynolds Garden Showcase
2. BO-TY Florist,

3. LET-IT Grow produce,
4. Imagine Flowers,
5. Greenbrooke Farm
6. Gallins Family Farm.

The following locations have verbally agreed to carry Carolina Dynamite when supplies are available:

1. A.B. Seed
2. New Garden Nursery
3. Franks Perennial Border Nursery
4. Sedge Garden Nursery Inc
5. King Sand and Supply
6. Reynolda Nursery and Landscaping
7. Saura Farm

Published Resources

1) Brinton, William F. (Ed.) *Earth, Plant, and Compost: Principles of Composting for Garden and Farm*. Mount Vernon, Maine: Woods End Agricultural Institute, Inc. 1995.

2) Brodie, Herbert L., Francis R. Gouin, and Lewis E. Carr. "What Makes Good Compost?" *In Farm Scale Composting*. Emmaus, Pennsylvania: JG Press, Inc .1995.

3) Rhona Sherman. Large – Scale Organic Materials Composting. North Carolina State University. At&T State University Cooperative Extension.

4) Rynk, Robert (Ed.) *On-Farm Composting Handbook* (NRAES). Ithaca, New York: Northeast Regional Agricultural Engineering Service. 1992.

United States Department of Agriculture

NRCS

Natural Resources Conservation Service

A product of the National Cooperative Soil Survey, a joint effort of the United States Department of Agriculture and other Federal agencies, State agencies including the Agricultural Experiment Stations, and local participants

Custom Soil Resource Report for

Davie County, North Carolina

Gallins Farm

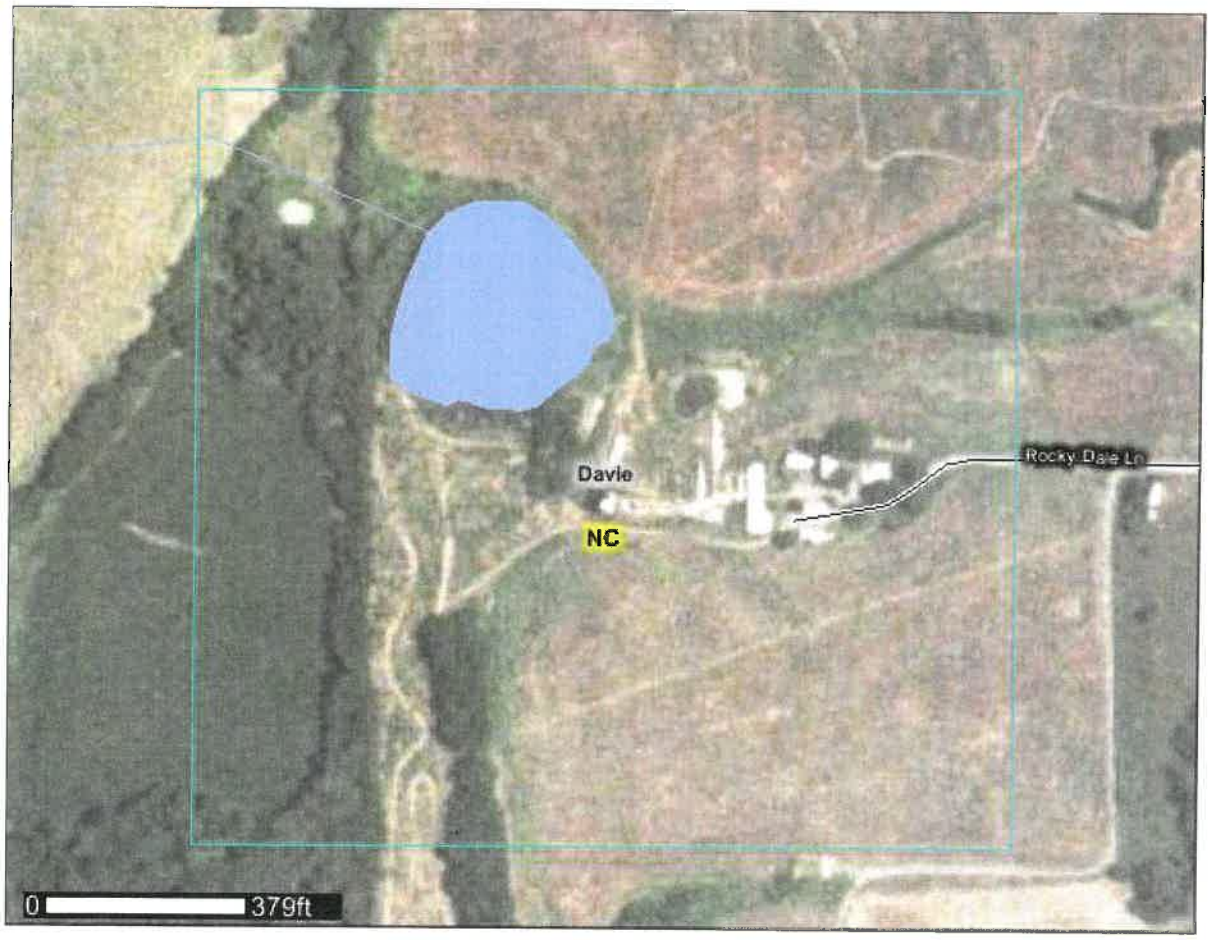

November 7, 2012

Preface

Soil surveys contain information that affects land use planning in survey areas. They highlight soil limitations that affect various land uses and provide information about the properties of the soils in the survey areas. Soil surveys are designed for many different users, including farmers, ranchers, foresters, agronomists, urban planners, community officials, engineers, developers, builders, and home buyers. Also, conservationists, teachers, students, and specialists in recreation, waste disposal, and pollution control can use the surveys to help them understand, protect, or enhance the environment.

Various land use regulations of Federal, State, and local governments may impose special restrictions on land use or land treatment. Soil surveys identify soil properties that are used in making various land use or land treatment decisions. The information is intended to help the land users identify and reduce the effects of soil limitations on various land uses. The landowner or user is responsible for identifying and complying with existing laws and regulations.

Although soil survey information can be used for general farm, local, and wider area planning, onsite investigation is needed to supplement this information in some cases. Examples include soil quality assessments (http://soils.usda.gov/sqi/) and certain conservation and engineering applications. For more detailed information, contact your local USDA Service Center (http://offices.sc.egov.usda.gov/locator/app?agency=nrcs) or your NRCS State Soil Scientist (http://soils.usda.gov/contact/state_offices/).

Great differences in soil properties can occur within short distances. Some soils are seasonally wet or subject to flooding. Some are too unstable to be used as a foundation for buildings or roads. Clayey or wet soils are poorly suited to use as septic tank absorption fields. A high water table makes a soil poorly suited to basements or underground installations.

The National Cooperative Soil Survey is a joint effort of the United States Department of Agriculture and other Federal agencies, State agencies including the Agricultural Experiment Stations, and local agencies. The Natural Resources Conservation Service (NRCS) has leadership for the Federal part of the National Cooperative Soil Survey.

Information about soils is updated periodically. Updated information is available through the NRCS Soil Data Mart Web site or the NRCS Web Soil Survey. The Soil Data Mart is the data storage site for the official soil survey information.

The U.S. Department of Agriculture (USDA) prohibits discrimination in all its programs and activities on the basis of race, color, national origin, age, disability, and where applicable, sex, marital status, familial status, parental status, religion, sexual orientation, genetic information, political beliefs, reprisal, or because all or a part of an individual's income is derived from any public assistance program. (Not all prohibited bases apply to all programs.) Persons with disabilities who require alternative means

for communication of program information (Braille, large print, audiotape, etc.) should contact USDA's TARGET Center at (202) 720-2600 (voice and TDD). To file a complaint of discrimination, write to USDA, Director, Office of Civil Rights, 1400 Independence Avenue, S.W., Washington, D.C. 20250-9410 or call (800) 795-3272 (voice) or (202) 720-6382 (TDD). USDA is an equal opportunity provider and employer.

Contents

Preface.....2
Soil Map.....5
Soil Map.....6
Legend.....7
Map Unit Legend.....8
Map Unit Descriptions.....8
Davie County, North Carolina.....10
CoA—Codorus loam, 0 to 2 percent slopes, frequently flooded.....10
DkB—Davie sandy loam, 1 to 6 percent slopes.....11
EbA—Elbert loam, 0 to 2 percent slopes, frequently flooded.....13
OkB2—Oak Level clay loam, 2 to 8 percent slopes, moderately eroded....13
OkC2—Oak Level clay loam, 8 to 15 percent slopes, moderately eroded.....14
RaB—Rasalo fine sandy loam, 2 to 8 percent slopes.....15
RcC—Rasalo fine sandy loam, 2 to 15 percent slopes, very stony.....16
W—Water.....17
References.....18

Soil Map

The soil map section includes the soil map for the defined area of interest, a list of soil map units on the map and extent of each map unit, and cartographic symbols displayed on the map. Also presented are various metadata about data used to produce the map, and a description of each soil map unit.

Custom Soil Resource Report
Soil Map

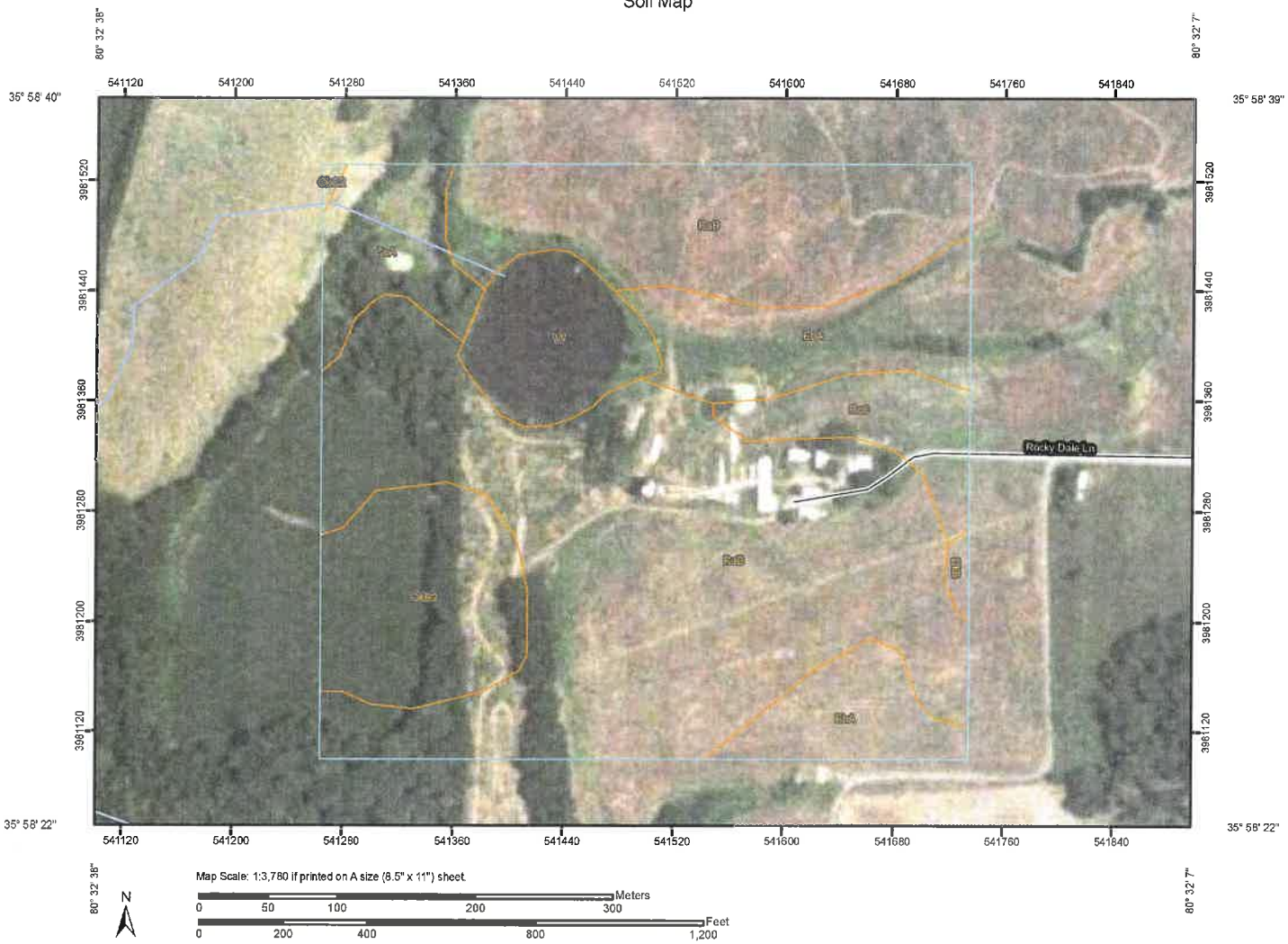

MAP LEGEND

Area of Interest (AOI)
- Area of Interest (AOI)

Soils
- Soil Map Units

Special Point Features
- Blowout
- Borrow Pit
- Clay Spot
- Closed Depression
- Gravel Pit
- Gravelly Spot
- Landfill
- Lava Flow
- Marsh or swamp
- Mine or Quarry
- Miscellaneous Water
- Perennial Water
- Rock Outcrop
- Saline Spot
- Sandy Spot
- Severely Eroded Spot
- Sinkhole
- Slide or Slip
- Sodic Spot
- Spoil Area
- Stony Spot
- Very Stony Spot
- Wet Spot
- Other

Special Line Features
- Gully
- Short Steep Slope
- Other

Political Features
- Cities

Water Features
- Streams and Canals

Transportation
- Rails
- Interstate Highways
- US Routes
- Major Roads
- Local Roads

MAP INFORMATION

Map Scale: 1:3,780 if printed on A size (8.5" × 11") sheet.

The soil surveys that comprise your AOI were mapped at 1:24,000.

Warning: Soil Map may not be valid at this scale.

Enlargement of maps beyond the scale of mapping can cause misunderstanding of the detail of mapping and accuracy of soil line placement. The maps do not show the small areas of contrasting soils that could have been shown at a more detailed scale.

Please rely on the bar scale on each map sheet for accurate map measurements.

Source of Map: Natural Resources Conservation Service
Web Soil Survey URL: http://websoilsurvey.nrcs.usda.gov
Coordinate System: UTM Zone 17N NAD83

This product is generated from the USDA-NRCS certified data as of the version date(s) listed below.

Soil Survey Area: Davie County, North Carolina
Survey Area Data: Version 9, Aug 22, 2012

Date(s) aerial images were photographed: 6/18/2006

The orthophoto or other base map on which the soil lines were compiled and digitized probably differs from the background imagery displayed on these maps. As a result, some minor shifting of map unit boundaries may be evident.

Map Unit Legend

Davie County, North Carolina (NC059)			
Map Unit Symbol	**Map Unit Name**	**Acres in AOI**	**Percent of AOI**
CoA	Codorus loam, 0 to 2 percent slopes, frequently flooded	2.7	5.3%
DkB	Davie sandy loam, 1 to 6 percent slopes	0.2	0.4%
EbA	Elbert loam, 0 to 2 percent slopes, frequently flooded	6.5	12.9%
OkB2	Oak Level clay loam, 2 to 8 percent slopes, moderately eroded	5.2	10.3%
OkC2	Oak Level clay loam, 8 to 15 percent slopes, moderately eroded	0.1	0.2%
RaB	Rasalo fine sandy loam, 2 to 8 percent slopes	30.2	59.9%
RcC	Rasalo fine sandy loam, 2 to 15 percent slopes, very stony	2.4	4.7%
W	Water	3.2	6.3%
Totals for Area of Interest		**50.3**	**100.0%**

Map Unit Descriptions

The map units delineated on the detailed soil maps in a soil survey represent the soils or miscellaneous areas in the survey area. The map unit descriptions, along with the maps, can be used to determine the composition and properties of a unit.

A map unit delineation on a soil map represents an area dominated by one or more major kinds of soil or miscellaneous areas. A map unit is identified and named according to the taxonomic classification of the dominant soils. Within a taxonomic class there are precisely defined limits for the properties of the soils. On the landscape, however, the soils are natural phenomena, and they have the characteristic variability of all natural phenomena. Thus, the range of some observed properties may extend beyond the limits defined for a taxonomic class. Areas of soils of a single taxonomic class rarely, if ever, can be mapped without including areas of other taxonomic classes. Consequently, every map unit is made up of the soils or miscellaneous areas for which it is named and some minor components that belong to taxonomic classes other than those of the major soils.

Most minor soils have properties similar to those of the dominant soil or soils in the map unit, and thus they do not affect use and management. These are called noncontrasting, or similar, components. They may or may not be mentioned in a particular map unit description. Other minor components, however, have properties and behavioral characteristics divergent enough to affect use or to require different management. These are called contrasting, or dissimilar, components. They generally are in small areas and could not be mapped separately because of the scale used. Some small areas of strongly contrasting soils or miscellaneous areas are identified by a special symbol on the maps. If included in the database for a given area, the contrasting minor components are identified in the map unit descriptions along with

some characteristics of each. A few areas of minor components may not have been observed, and consequently they are not mentioned in the descriptions, especially where the pattern was so complex that it was impractical to make enough observations to identify all the soils and miscellaneous areas on the landscape.

The presence of minor components in a map unit in no way diminishes the usefulness or accuracy of the data. The objective of mapping is not to delineate pure taxonomic classes but rather to separate the landscape into landforms or landform segments that have similar use and management requirements. The delineation of such segments on the map provides sufficient information for the development of resource plans. If intensive use of small areas is planned, however, onsite investigation is needed to define and locate the soils and miscellaneous areas.

An identifying symbol precedes the map unit name in the map unit descriptions. Each description includes general facts about the unit and gives important soil properties and qualities.

Soils that have profiles that are almost alike make up a *soil series*. Except for differences in texture of the surface layer, all the soils of a series have major horizons that are similar in composition, thickness, and arrangement.

Soils of one series can differ in texture of the surface layer, slope, stoniness, salinity, degree of erosion, and other characteristics that affect their use. On the basis of such differences, a soil series is divided into *soil phases*. Most of the areas shown on the detailed soil maps are phases of soil series. The name of a soil phase commonly indicates a feature that affects use or management. For example, Alpha silt loam, 0 to 2 percent slopes, is a phase of the Alpha series.

Some map units are made up of two or more major soils or miscellaneous areas. These map units are complexes, associations, or undifferentiated groups.

A *complex* consists of two or more soils or miscellaneous areas in such an intricate pattern or in such small areas that they cannot be shown separately on the maps. The pattern and proportion of the soils or miscellaneous areas are somewhat similar in all areas. Alpha-Beta complex, 0 to 6 percent slopes, is an example.

An *association* is made up of two or more geographically associated soils or miscellaneous areas that are shown as one unit on the maps. Because of present or anticipated uses of the map units in the survey area, it was not considered practical or necessary to map the soils or miscellaneous areas separately. The pattern and relative proportion of the soils or miscellaneous areas are somewhat similar. Alpha-Beta association, 0 to 2 percent slopes, is an example.

An *undifferentiated group* is made up of two or more soils or miscellaneous areas that could be mapped individually but are mapped as one unit because similar interpretations can be made for use and management. The pattern and proportion of the soils or miscellaneous areas in a mapped area are not uniform. An area can be made up of only one of the major soils or miscellaneous areas, or it can be made up of all of them. Alpha and Beta soils, 0 to 2 percent slopes, is an example.

Some surveys include *miscellaneous areas*. Such areas have little or no soil material and support little or no vegetation. Rock outcrop is an example.

Davie County, North Carolina

CoA—Codorus loam, 0 to 2 percent slopes, frequently flooded

Map Unit Setting

Elevation: 200 to 1,560 feet
Mean annual precipitation: 40 to 48 inches
Mean annual air temperature: 50 to 59 degrees F
Frost-free period: 160 to 200 days

Map Unit Composition

Codorus and similar soils: 85 percent
Minor components: 15 percent

Description of Codorus

Setting

Landform: Flood plains
Landform position (three-dimensional): Tread
Down-slope shape: Concave
Across-slope shape: Linear
Parent material: Loamy alluvium derived from igneous and metamorphic rock

Properties and qualities

Slope: 0 to 2 percent
Depth to restrictive feature: More than 80 inches
Drainage class: Somewhat poorly drained
Capacity of the most limiting layer to transmit water (Ksat): Moderately high to high (0.57 to 1.98 in/hr)
Depth to water table: About 6 to 24 inches
Frequency of flooding: Frequent
Frequency of ponding: None
Available water capacity: High (about 10.7 inches)

Interpretive groups

Land capability (nonirrigated): 4w

Typical profile

0 to 8 inches: Loam
8 to 18 inches: Silty clay loam
18 to 30 inches: Loam
30 to 38 inches: Silt loam
38 to 50 inches: Silt loam
50 to 80 inches: Silt loam

Minor Components

Hatboro, undrained

Percent of map unit: 5 percent
Landform: Depressions on flood plains
Landform position (three-dimensional): Tread
Down-slope shape: Concave
Across-slope shape: Linear

Dan river

Percent of map unit: 2 percent

Landform: Flood plains
Landform position (three-dimensional): Tread
Down-slope shape: Convex
Across-slope shape: Linear

Comus

Percent of map unit: 2 percent
Landform: Flood plains
Landform position (three-dimensional): Tread
Down-slope shape: Convex
Across-slope shape: Linear

Pfafftown

Percent of map unit: 2 percent
Landform: Stream terraces
Landform position (three-dimensional): Tread
Down-slope shape: Convex
Across-slope shape: Linear

Ronda

Percent of map unit: 2 percent
Landform: Natural levees on flood plains
Landform position (three-dimensional): Tread
Down-slope shape: Convex
Across-slope shape: Convex

Banister

Percent of map unit: 2 percent
Landform: Flats on stream terraces
Landform position (three-dimensional): Tread
Down-slope shape: Concave
Across-slope shape: Linear

DkB—Davie sandy loam, 1 to 6 percent slopes

Map Unit Setting

Elevation: 200 to 2,000 feet
Mean annual precipitation: 40 to 48 inches
Mean annual air temperature: 50 to 59 degrees F
Frost-free period: 160 to 200 days

Map Unit Composition

Davie and similar soils: 85 percent
Minor components: 15 percent

Description of Davie

Setting

Landform: Ridges
Landform position (two-dimensional): Summit, footslope
Down-slope shape: Concave

Across-slope shape: Concave
Parent material: Saprolite derived from diorite and/or gabbro and/or diabase and/or gneiss

Properties and qualities

Slope: 1 to 6 percent
Depth to restrictive feature: More than 80 inches
Drainage class: Moderately well drained
Capacity of the most limiting layer to transmit water (Ksat): Moderately low to moderately high (0.06 to 0.20 in/hr)
Depth to water table: About 12 to 18 inches
Frequency of flooding: None
Frequency of ponding: None
Available water capacity: High (about 9.7 inches)

Interpretive groups

Land capability (nonirrigated): 2e

Typical profile

0 to 9 inches: Sandy loam
9 to 29 inches: Clay
29 to 34 inches: Clay loam
34 to 80 inches: Sandy clay loam

Minor Components

Rasalo

Percent of map unit: 10 percent
Landform: Interfluves
Landform position (two-dimensional): Summit
Landform position (three-dimensional): Interfluve
Down-slope shape: Convex
Across-slope shape: Convex

Elbert, undrained

Percent of map unit: 3 percent
Landform: Drainageways on interfluves
Landform position (two-dimensional): Summit
Landform position (three-dimensional): Interfluve
Down-slope shape: Linear
Across-slope shape: Linear

Zion

Percent of map unit: 2 percent
Landform: Hillslopes on ridges
Landform position (two-dimensional): Backslope
Landform position (three-dimensional): Side slope
Down-slope shape: Linear
Across-slope shape: Convex

EbA—Elbert loam, 0 to 2 percent slopes, frequently flooded

Map Unit Setting

Elevation: 200 to 1,400 feet
Mean annual precipitation: 37 to 60 inches
Mean annual air temperature: 59 to 66 degrees F
Frost-free period: 200 to 240 days

Map Unit Composition

Elbert, undrained, and similar soils: 85 percent

Description of Elbert, Undrained

Setting

Landform: Drainageways on interfluves
Landform position (two-dimensional): Summit
Landform position (three-dimensional): Interfluve
Down-slope shape: Linear
Across-slope shape: Linear
Parent material: Residuum weathered from diorite and/or gabbro and/or diabase and/or gneiss

Properties and qualities

Slope: 0 to 2 percent
Depth to restrictive feature: 40 to 80 inches to paralithic bedrock
Drainage class: Poorly drained
Capacity of the most limiting layer to transmit water (Ksat): Moderately low to moderately high (0.06 to 0.20 in/hr)
Depth to water table: About 6 to 18 inches
Frequency of flooding: Frequent
Frequency of ponding: Rare
Available water capacity: High (about 9.7 inches)

Interpretive groups

Land capability (nonirrigated): 6w

Typical profile

0 to 3 inches: Loam
3 to 64 inches: Clay
64 to 80 inches: Clay loam

OkB2—Oak Level clay loam, 2 to 8 percent slopes, moderately eroded

Map Unit Setting

Elevation: 200 to 1,400 feet
Mean annual precipitation: 40 to 48 inches

Mean annual air temperature: 50 to 59 degrees F
Frost-free period: 160 to 200 days

Map Unit Composition
Oak level, moderately eroded, and similar soils: 85 percent

Description of Oak Level, Moderately Eroded

Setting
Landform: Interfluves
Landform position (two-dimensional): Summit
Landform position (three-dimensional): Interfluve
Down-slope shape: Convex
Across-slope shape: Convex
Parent material: Saprolite derived from diorite and/or gabbro and/or diabase and/or gneiss

Properties and qualities
Slope: 2 to 8 percent
Depth to restrictive feature: More than 80 inches
Drainage class: Well drained
Capacity of the most limiting layer to transmit water (Ksat): Moderately low to moderately high (0.06 to 0.20 in/hr)
Depth to water table: More than 80 inches
Frequency of flooding: None
Frequency of ponding: None
Available water capacity: Moderate (about 8.9 inches)

Interpretive groups
Land capability (nonirrigated): 2e

Typical profile
0 to 7 inches: Clay loam
7 to 30 inches: Clay
30 to 38 inches: Clay loam
38 to 80 inches: Loam

OkC2—Oak Level clay loam, 8 to 15 percent slopes, moderately eroded

Map Unit Setting
Elevation: 200 to 1,400 feet
Mean annual precipitation: 37 to 60 inches
Mean annual air temperature: 59 to 66 degrees F
Frost-free period: 200 to 240 days

Map Unit Composition
Oak level, moderately eroded, and similar soils: 85 percent

Description of Oak Level, Moderately Eroded

Setting
Landform: Hillslopes on ridges
Landform position (two-dimensional): Backslope

Landform position (three-dimensional): Side slope
Down-slope shape: Linear
Across-slope shape: Convex
Parent material: Saprolite derived from diorite and/or gabbro and/or diabase and/or gneiss

Properties and qualities

Slope: 8 to 15 percent
Depth to restrictive feature: More than 80 inches
Drainage class: Well drained
Capacity of the most limiting layer to transmit water (Ksat): Moderately low to moderately high (0.06 to 0.20 in/hr)
Depth to water table: More than 80 inches
Frequency of flooding: None
Frequency of ponding: None
Available water capacity: Moderate (about 8.9 inches)

Interpretive groups

Land capability (nonirrigated): 3e

Typical profile

0 to 7 inches: Clay loam
7 to 30 inches: Clay
30 to 38 inches: Clay loam
38 to 80 inches: Loam

RaB—Rasalo fine sandy loam, 2 to 8 percent slopes

Map Unit Setting

Elevation: 200 to 1,400 feet
Mean annual precipitation: 37 to 60 inches
Mean annual air temperature: 59 to 66 degrees F
Frost-free period: 200 to 240 days

Map Unit Composition

Rasalo and similar soils: 85 percent

Description of Rasalo

Setting

Landform: Interfluves
Landform position (two-dimensional): Summit
Landform position (three-dimensional): Interfluve
Down-slope shape: Convex
Across-slope shape: Convex
Parent material: Residuum weathered from diorite and/or residuum weathered from gabbro and/or residuum weathered from diabase and/or residuum weathered from gneiss

Properties and qualities

Slope: 2 to 8 percent
Depth to restrictive feature: More than 80 inches
Drainage class: Well drained

Capacity of the most limiting layer to transmit water (Ksat): Moderately low to moderately high (0.06 to 0.20 in/hr)
Depth to water table: More than 80 inches
Frequency of flooding: None
Frequency of ponding: None
Available water capacity: Moderate (about 8.3 inches)

Interpretive groups
Land capability (nonirrigated): 2e

Typical profile
0 to 9 inches: Fine sandy loam
9 to 23 inches: Clay
23 to 36 inches: Clay loam
36 to 80 inches: Fine sandy loam

RcC—Rasalo fine sandy loam, 2 to 15 percent slopes, very stony

Map Unit Setting
Elevation: 200 to 1,400 feet
Mean annual precipitation: 37 to 60 inches
Mean annual air temperature: 59 to 66 degrees F
Frost-free period: 200 to 240 days

Map Unit Composition
Rasalo, very stony, and similar soils: 100 percent

Description of Rasalo, Very Stony

Setting
Landform: Hillslopes on ridges
Landform position (two-dimensional): Backslope
Landform position (three-dimensional): Side slope
Down-slope shape: Linear
Across-slope shape: Convex
Parent material: Residuum weathered from diorite and/or residuum weathered from gabbro and/or residuum weathered from diabase and/or residuum weathered from gneiss

Properties and qualities
Slope: 2 to 15 percent
Surface area covered with cobbles, stones or boulders: 2.0 percent
Depth to restrictive feature: More than 80 inches
Drainage class: Well drained
Capacity of the most limiting layer to transmit water (Ksat): Moderately low to moderately high (0.06 to 0.20 in/hr)
Depth to water table: More than 80 inches
Frequency of flooding: None
Frequency of ponding: None
Available water capacity: Moderate (about 8.2 inches)

Interpretive groups
Land capability (nonirrigated): 6s

Typical profile

0 to 9 inches: Fine sandy loam
9 to 23 inches: Clay
23 to 36 inches: Clay loam
36 to 80 inches: Fine sandy loam

W—Water

Map Unit Composition

Water: 100 percent

Description of Water

Interpretive groups

Land capability (nonirrigated): 8w

References

American Association of State Highway and Transportation Officials (AASHTO). 2004. Standard specifications for transportation materials and methods of sampling and testing. 24th edition.

American Society for Testing and Materials (ASTM). 2005. Standard classification of soils for engineering purposes. ASTM Standard D2487-00.

Cowardin, L.M., V. Carter, F.C. Golet, and E.T. LaRoe. 1979. Classification of wetlands and deep-water habitats of the United States. U.S. Fish and Wildlife Service FWS/OBS-79/31.

Federal Register. July 13, 1994. Changes in hydric soils of the United States.

Federal Register. September 18, 2002. Hydric soils of the United States.

Hurt, G.W., and L.M. Vasilas, editors. Version 6.0, 2006. Field indicators of hydric soils in the United States.

National Research Council. 1995. Wetlands: Characteristics and boundaries.

Soil Survey Division Staff. 1993. Soil survey manual. Soil Conservation Service. U.S. Department of Agriculture Handbook 18. http://soils.usda.gov/

Soil Survey Staff. 1999. Soil taxonomy: A basic system of soil classification for making and interpreting soil surveys. 2nd edition. Natural Resources Conservation Service, U.S. Department of Agriculture Handbook 436. http://soils.usda.gov/

Soil Survey Staff. 2006. Keys to soil taxonomy. 10th edition. U.S. Department of Agriculture, Natural Resources Conservation Service. http://soils.usda.gov/

Tiner, R.W., Jr. 1985. Wetlands of Delaware. U.S. Fish and Wildlife Service and Delaware Department of Natural Resources and Environmental Control, Wetlands Section.

United States Army Corps of Engineers, Environmental Laboratory. 1987. Corps of Engineers wetlands delineation manual. Waterways Experiment Station Technical Report Y-87-1.

United States Department of Agriculture, Natural Resources Conservation Service. National forestry manual. http://soils.usda.gov/

United States Department of Agriculture, Natural Resources Conservation Service. National range and pasture handbook. http://www.glti.nrcs.usda.gov/

United States Department of Agriculture, Natural Resources Conservation Service. National soil survey handbook, title 430-VI. http://soils.usda.gov/

United States Department of Agriculture, Natural Resources Conservation Service. 2006. Land resource regions and major land resource areas of the United States, the Caribbean, and the Pacific Basin. U.S. Department of Agriculture Handbook 296. http://soils.usda.gov/

United States Department of Agriculture, Soil Conservation Service. 1961. Land capability classification. U.S. Department of Agriculture Handbook 210.

222
100 m
400 ft

Forest
200+ Feet
Farm Shed
Bright Concrete Silos
Composting Site
0.63 acres.
Road
Farm Shed
50 m
200 ft
Latitude: 35° 58' 28.91" Longitude: -80° 32' 22.28"

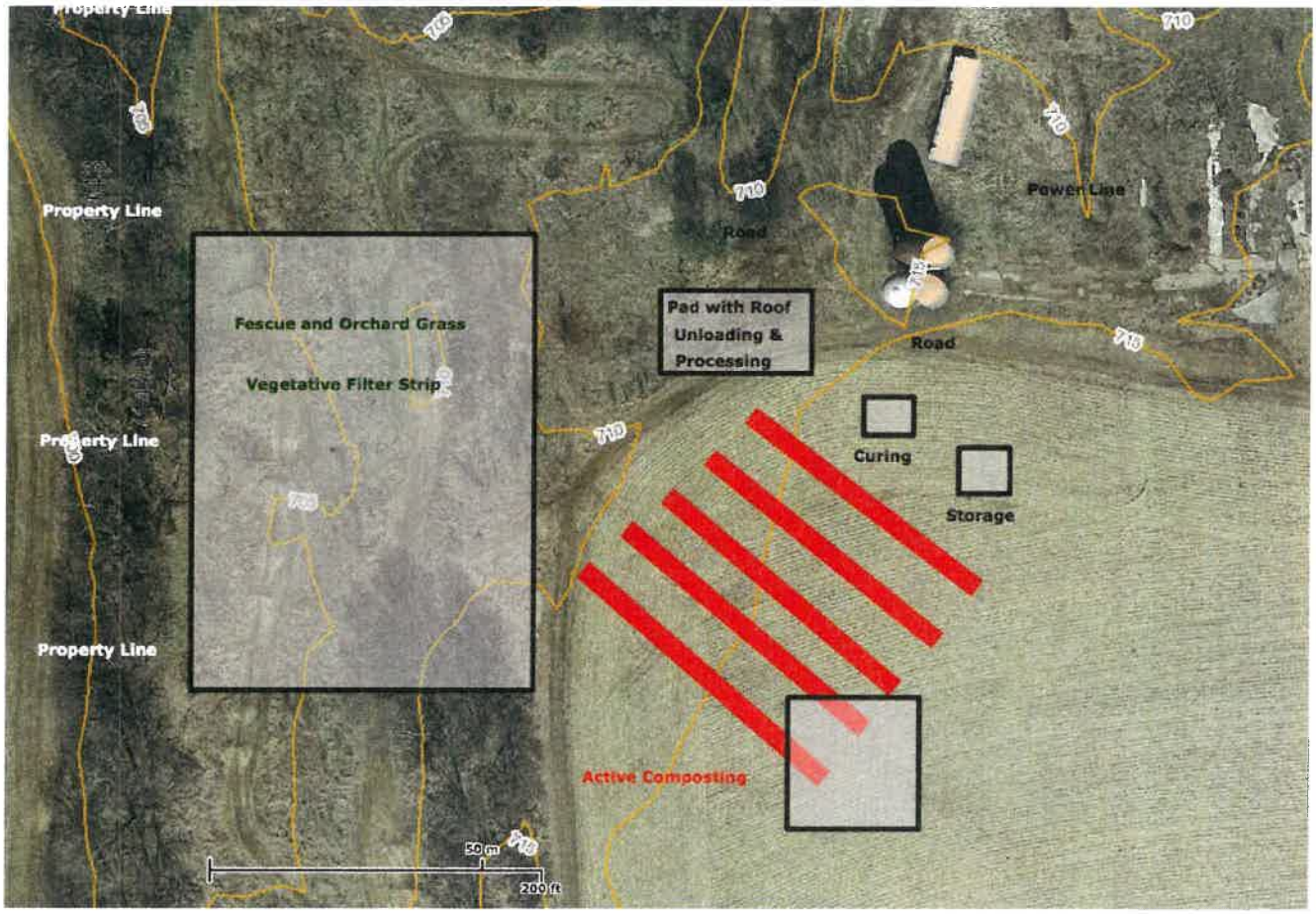
Property Line
Property Line
Property Line
Fescue and Orchard Grass
Vegetative Filter Strip
Pad with Roof
Unloading &
Processing
Road
Road
Power Line
Curing
Storage
Active Composting
710
50 m
200 ft

Gallins Family Farm
Report on the design of the Facility:

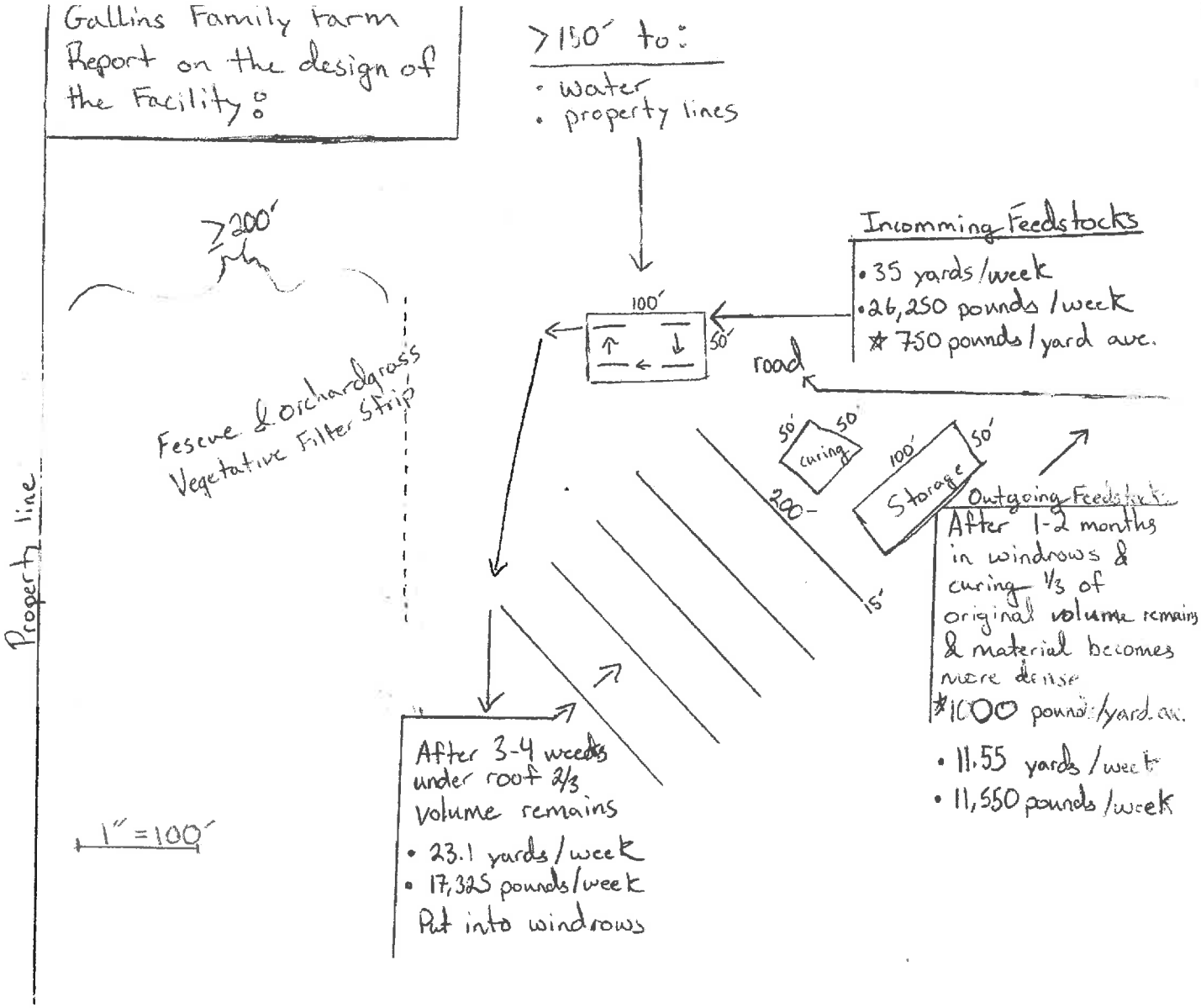

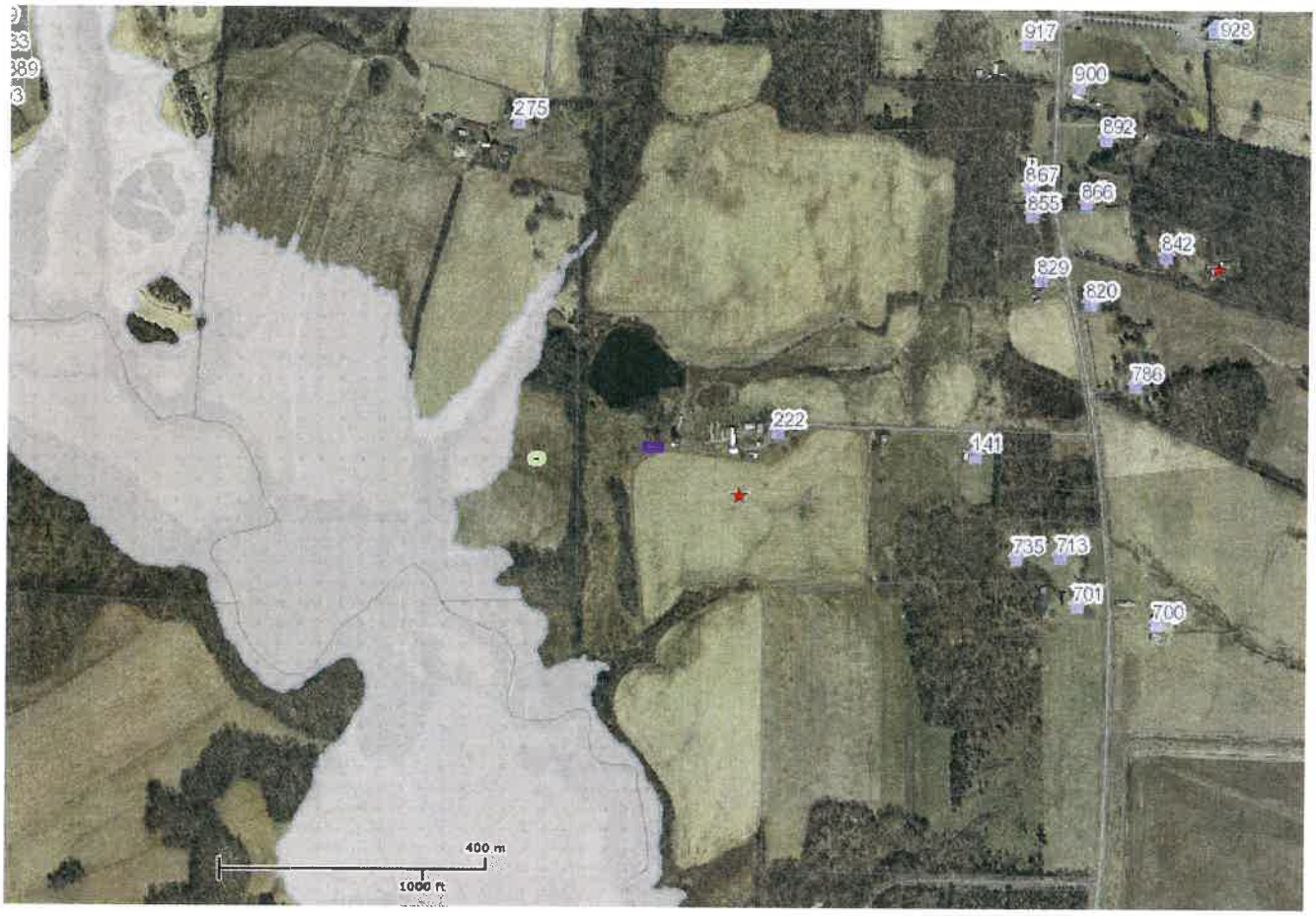
917
928
900
892
275
867
855
866
842
829
820
786
222
141
735
713
701
700
400 m
1000 ft

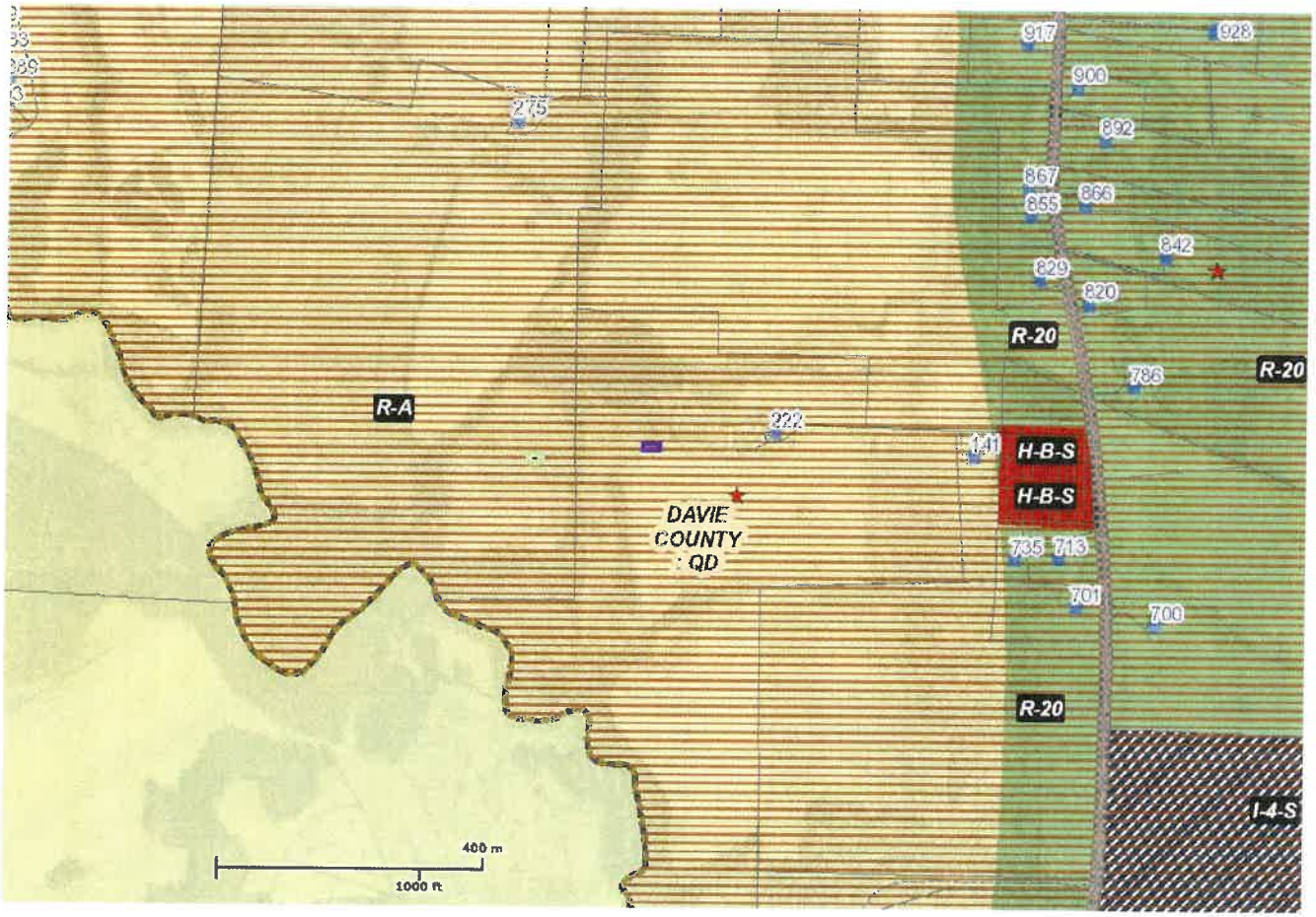
917
928
900
892
867
855
866
842
829
820
R-20
786
R-20
275
R-A
222
141
H-B-S
H-B-S
DAVIE
COUNTY
QD
735
713
701
700
R-20
I-4-S
400 m
1000 ft

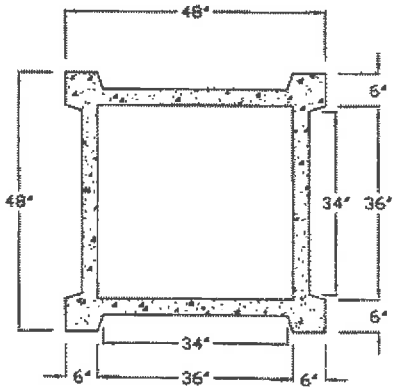

3' X 3' X 3.5' CATCH BASIN
H20 TRAFFIC

SHOAF PRECAST SEPTIC INC.
4130 WEST US HWY 64
LEXINGTON, NC 27295
PHONE (336) 787-5826
FAX (336) 787-2826
WWW.SHOAFPRECAST.COM
CONCRETE PSI-4,000
REINFORCING PER STATE CODE
CATCH BASIN HEIGHT-48"
CATCH BASIN WEIGHT-3,600 LBS.
ACCESS-FRAME & GRATE OR CONCRETE LID

SCALE - N.T.S.

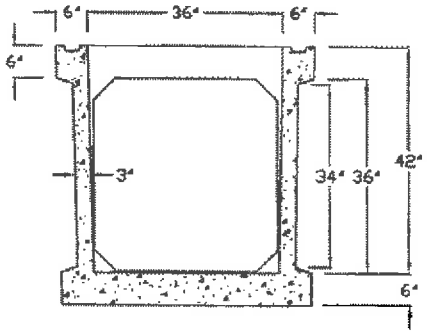

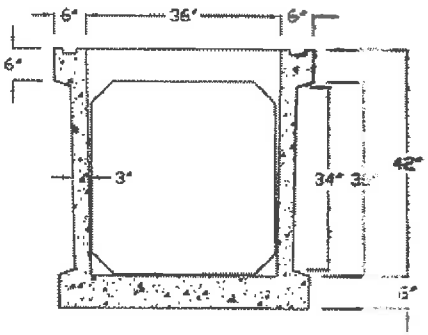

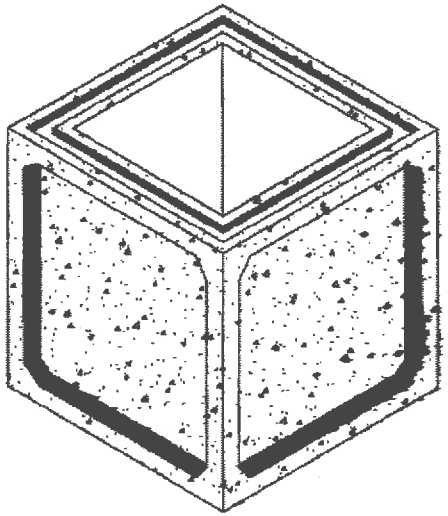

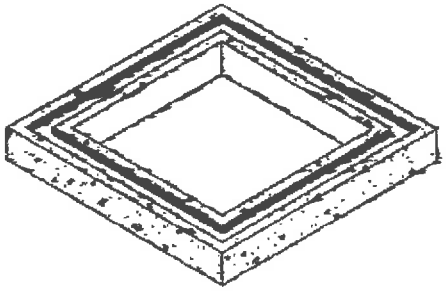

**NOTE-RISER AVAILABLE IN 6" OR 12"

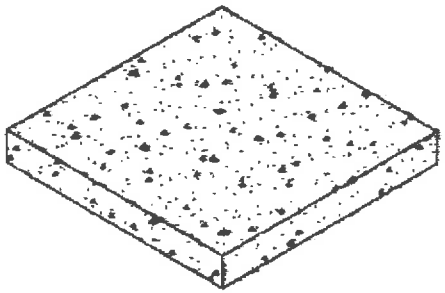

SOLID LID

NOTE-OPTIONAL SQUARE OR ROUND ACCESS CAST-IN

ALAMANCE CONSULTING ENGINEERS 961-F Burlington Ave., Gibsonville, NC 27249

PH: (336) 449-4558 • FAX: (336) 449-5732 • EMAIL: alamance@ace-nc.net

December 11, 2013

N.C. Department of Environmental & Natural Resources
217 W. Jones Street
Raleigh, NC 27603
Attn: M.A. Gallagher, Supervisor, Composting & Land Application Branch, Solid Waste Section, Division of Waste Management

Subject: Gallins Farm Leachate Catch Basin Tank Test
Alamance Consulting Engineers Job # 13106

Dear Mr. Gallagher,

A leak test for Gallins Farm 3x3 concrete leachate catch basin was performed on 12/7/2013 – 12/8/2013 by filling the basin with water, measuring the water level, letting the basin sit for a 24 hour period and measuring the water level again. There was no observed change in the water level at the end of the 24 hour test period.

If you have any questions or concerns about the test, please call me.

Sincerely,

G. Kevin Bengel, PE

NORTH CAROLINA PROFESSIONAL SEAL 025043 ENGINEER G. KEVIN BENGEL

\\NTSERVER\Client Files\Active 2013\13106 Gallins Family Farm\Gallins Farm Catch Basin Leachate Test letter 12-11-2013.doc

Carolina Environmental Consultants, Inc., P.A.

12-1-2013

Peter M. Gallins
222 Rocky Dale Lane
Mocksville, NC 27028

Re: Soil descriptions and samples at 222 Rocky Dale Lane – Daive County, NC

Carolina Environmental Consultants (CEC) has performed soil borings and collected samples at a proposed composting operation located at 222 Rocky Dale Lane in Davie County NC.

SCOPE OF WORK

Carolina Environmental Consultants' (CEC) Licensed Soil Scientists have performed soil borings on the above reference parcel. The property was evaluated, taking note of the soil conditions (depth, texture, structure, seasonal wetness, restrictive horizons, etc.) through hand auger borings. Soil samples were also collected for soil physical properties as well as chemical analysis. The samples were collected as a composite sample and analyzed at A&L Eastern Laboratories.

FINDINGS

The soil identified on the parcel contained a clay loam surface over a clay subsoil. The subsoil had a consistence of sticky, plastic, and firm to very sticky, very plastic, and very firm. The clay mineralogy is mixed to expansive. In two of the borings there were 2 chroma colors noted at 28 inches. One appeared to be a pore lining and the other appeared to be due to weak structure and clay seems. In each instance where this was noted there was no presence of reduced iron deeper in the profile. It appears the depth to the seasonal high water table is greater than 48". See the attached soil descriptions and sample analysis. The attached soil map is not a survey; soil borings were located via GPS technology. The depicted windrows are a reflection of what was identified during the evaluation not the intended long-term plan.

CONCLUSIONS

CEC is glad to be of service in this matter. Please feel free to contact our office with any questions or concerns you may have.

Sincerely,

Eric Bailey
NC Licensed Soil Scientist
NC Septic System Inspector
VA Licensed Soil Scientist
REHSI

Encl: Soil/Site Map

Carolina Environmental Consultants, Inc., P.A.

SOIL BORING DESCRIPTIONS

BORING 1

HORIZON	DEPTH/INCHES	TEXTURE	STRUCTURE	CONSISTENCE	SOIL WETNESS DEPTH
A	0-8	Cl	WKFSBK	SS SP FR	
Bt	8-22	C	MMABK	S P FI	
BC	22-34	Cl	WKFSBK	SS SP FI	2 chroma at 28" @ clay seam
C	34-48	SCl	SLSMA	SS SP FI	

BORING 2

HORIZON	DEPTH/INCHES	TEXTURE	STRUCTURE	CONSISTENCE	SOIL WETNESS DEPTH
Bt	0-7	C	WKFSBK/ABK	S P FI	
BC1	7-21	Cl	WKFSBK	S P FI	
BC2	21-48	Cl	WKFSBK	SS SP FR	

BORING 3

HORIZON	DEPTH/INCHES	TEXTURE	STRUCTURE	CONSISTENCE	SOIL WETNESS DEPTH
A	0-14	Cl	WKFGR	SS SP FR	
Bt	14-39	C	MMABK	VS VP VFI	
BC	39-48	C	WKFSBK	SS SP FR	

BORING 4

HORIZON	DEPTH/INCHES	TEXTURE	STRUCTURE	CONSISTENCE	SOIL WETNESS DEPTH
A	0-6	Cl	WKFGR	SS SP FR	
Bt	6-38	C	MMABK	VS VP VFI	2 chroma @28" in pore lining
BC	38-46	Cl	WKFSBK	S P FI	
C	46-48	SCl	SLS MA	SS SP FR	

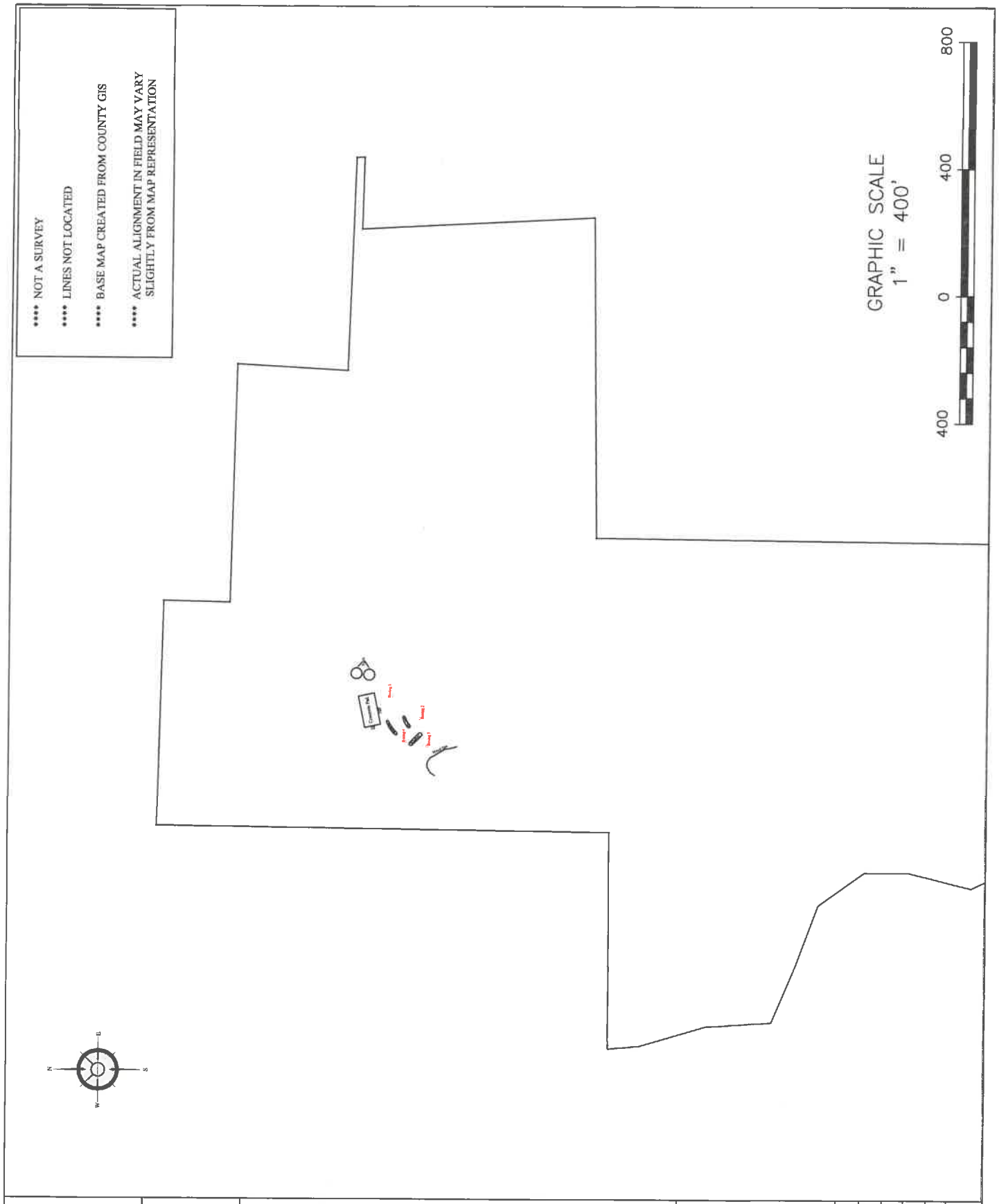

SHEET TITLE

Boring Sketch Map

SHEET 1 of 1

Gallins Farm
Pete Gallins
Davie Co, NC
November 2013

Carolina Environmental Consultants, Inc., P.A.
Lexington Office
304 Breckenridge Court
Lexington, NC 27292
336-596-7585

REVISIONS:

PROJECT MGR.	EB
DRAWN	EB
FIELD WORK	EB
SCALE	1" = 400'

**** NOT A SURVEY

**** LINES NOT LOCATED

**** BASE MAP CREATED FROM COUNTY GIS

**** ACTUAL ALIGNMENT IN FIELD MAY VARY SLIGHTLY FROM MAP REPRESENTATION

GRAPHIC SCALE
1" = 100'

100 0 100 200

SHEET TITLE
Boring Sketch Map

SHEET 1 of 1

Gallins Farm
Pete Gallins
Davie Co, NC

November 2013

Carolina Environmental Consultants, Inc., P.A.
Lexington Office
304 Breckenridge Court
Lexington, NC 27292
336-596-7585

REVISIONS:

PROJECT MGR. EB
DRAWN EB
FIELD WORK EB
SCALE 1" = 100'

Report Number
13-323-0610 **Page:** 1 of 2

Account Number
02504

A&L Eastern Laboratories, Inc.
7621 Whitepine Road Richmond, Virginia 23237 (804) 743-9401 Fax (804) 271-6446
www.aleastern.com

Send To : CAROLINA ENVIRONMENTAL CONSULTANTS
304 BRECKENRIDGE CT

LEXINGTON , NC 27292

Submitted By : ERIC BAILEY
Purchase Order :
Report Date: 11/21/2013
Date Received : 11/19/2013

Client : DAVIE COUNTY NC
PETE GALLINS

REPORT OF ANALYSIS

Laboratory Number:	**09246**
Sample Date And Time:	
Sample Identification:	SAMPLE 1
Analysis:	
Bulk Density, Disturbed ,g/ml BULK DENSITY	1.12
Total Arsenic ,ppm SW 6010C	< 3.0
Total Cadmium ,ppm SW 6010C	< 2.0
Total Chromium ,ppm SW 6010C	42
Total Copper ,ppm SW 6010C	20
Total Lead ,ppm SW 6010C	18
Total Mercury ,ppm SW-7471B	< 0.4
Total Nickel ,ppm SW 6010C	11

Pauric McGroary

Pauric McGroary

Report Number
13-323-0610 **Page:** 2 of 2

Account Number
02504

A&L Eastern Laboratories, Inc.
7621 Whitepine Road Richmond, Virginia 23237 (804) 743-9401 Fax (804) 271-6446
www.aleastern.com

Send To : CAROLINA ENVIRONMENTAL CONSULTANTS
304 BRECKENRIDGE CT

LEXINGTON , NC 27292

Submitted By : ERIC BAILEY
Purchase Order :
Report Date: 11/21/2013
Date Received : 11/19/2013

Client : DAVIE COUNTY NC
PETE GALLINS

REPORT OF ANALYSIS

Laboratory Number:	**09246**
Sample Date And Time:	
Sample Identification:	SAMPLE 1
Analysis:	
Total Selenium ,ppm SW 6010C	< 5.0
Total Zinc ,ppm SW 6010C	63

Method Reference:
Methods of Soil Analysis, Part 1 - Physical and Mineralogical Methods, 2nd Ed. Rev. Soil Science Society of America, Black, C.A et al. 1982, page 404-408.
Methods of Soil Analysis, Part 3 - Chemical Methods, 2nd Ed. Rev. Soil Science Society of America, Black, C.A et al. 1982
USEPA, SW-846, Test Methods for Evaluating Solid Wastes, Physical/Chemical Methods, 3rd Ed. Current Revision

Pauric McGroary

Pauric McGroary

Report Number: 13-323-0610
Account Number: 02504

A&L Eastern Laboratories
7621 Whitepine Road Richmond, Virginia 23237 (804) 743-9401 Fax (804) 271-6446
www.aleastern.com

Send To: CAROLINA ENVIRONMENTAL CONSUL
304 BRECKENRIDGE CT
LEXINGTON NC 27292

Grower:
PETE GALLINS
DAVIE COUNTY NC

Submitted By: ERIC BAILEY
Farm ID:

SOIL ANALYSIS REPORT

Analytical Method(s):
Mehlich 3

Date Received: 11/19/2013 **Date Of Analysis:** 11/20/2013 **Date Of Report:** 11/21/2013

Sample ID Field ID	Lab Number	Organic Matter			Phosphorus				Potassium		Magnesium		Calcium		Sodium		pH		Acidity	C.E.C
		%	Rate	ENR lbs/A	Mehlich 3 ppm	Rate	Reserve ppm	Rate	K ppm	Rate	Mg ppm	Rate	Ca ppm	Rate	Na ppm	Rate	Soil pH	Buffer Index	H meq/100g	meq/100g
SAMPLE 1	09246	5.4	H	135	114 NC = 95	VH			387 NC = 198	VH	463	H	1906	M	-		6.2		2.0	16.4

Sample ID Field ID	Percent Base Saturation					Nitrate		Sulfur		Zinc		Manganese		Iron		Copper		Boron		Soluble Salts		Chloride		Aluminum
	K %	Mg %	Ca %	Na %	H %	NO_3N ppm	Rate	S ppm	Rate	Zn ppm	Rate	Mn ppm	Rate	Fe ppm	Rate	Cu ppm	Rate	B ppm	Rate	SS ms/cm	Rate	Cl ppm	Rate	Al ppm
SAMPLE 1	6.1	23.5	58.1		12.1																			

Values on this report represent the plant available nutrients in the soil. Rating after each value: VL (Very Low), L (Low), M (Medium), H (High), VH (Very High). ENR - Estimated Nitrogen Release. C.E.C. - Cation Exchange Capacity.

Explanation of symbols: % (percent), ppm (parts per million), lbs/A (pounds per acre), ms/cm (milli-mhos per centimeter), meq/100g (milli-equivalent per 100 grams). Conversions: ppm x 2 = lbs/A, Soluble Salts ms/cm x 640 = ppm.

This report applies to sample(s) tested. Samples are retained a maximum of thirty days after testing.

Analysis prepared by: A&L Eastern Laboratories, Inc.

by: Pauric McGroary

Pauric McGroary

Report Number: 13-323-0610
Account Number: 02504

www.aleastern.com

A&L Eastern Laboratories
7621 Whitepine Road Richmond, Virginia 23237 (804) 743-9401 Fax (804) 271-5446

Send To: CAROLINA ENVIRONMENTAL CONSUL
304 BRECKENRIDGE CT
LEXINGTON NC 27292

Grower:
PETE GALLINS
DAVIE COUNTY NC

Submitted By: ERIC BAILEY
Farm ID:

Date Received: 11/19/2013
Date Of Report: 11/21/2013

SOIL FERTILITY RECOMMENDATIONS

Sample ID Field ID	Intended Crop	Yield Goal Tons	Lime Tons/A	Nitrogen N lb/A	Phosphate P_2O_5 lb/A	Potash K_2O lb/A	Magnesium Mg lb/A	Sulfur S lb/A	Zinc Zn lb/A	Manganese Mn lb/A	Iron Fe lb/A	Copper Cu lb/A	Boron B lb/A
SAMPLE 1	Hay	4	0.0	50	0	0	0						

Comments:

"The recommendations are based on research data and experience, but NO GUARANTEE or WARRANTY expressed or implied, concerning crop performance is made."

Our reports and letters are for the exclusive and confidential use of our clients,, and may not be reproduced in whole or part, nor may any reference be made to the work,the results, or the company in any advertising, news release, or other public anouncements without obtaining our prior written authorization. Copy right 1977.

Pauric McGroary

Pauric McGroary

BK 886 PG 066

01556

FILED FOR REGISTRATION
MARCH 23, 2012 1:08 P.M.
DATE TIME
AND RECORDED IN BOOK 886 PAGE 66
M. BRENT SHOAF, REGISTER OF DEEDS
DAVIE COUNTY, NC
BY Beverly A. McDaniel
DEPUTY

Davie County, North Carolina
Excise Tax Paid $970.00
3-23-2012

DEED TRANSFER CHECKED
DATE 3/23/12 BY K. Rayle
TAX ADMINISTRATOR

Mail to: GRANTEE @ 3195 Centre Park Blvd, Winston-Salem, NC 27107

NORTH CAROLINA GENERAL WARRANTY DEED

Excise Tax: 970.00 JAS
Parcel Identifier No._____ Verified by _____ County on the ____ day of _____, 2012
By:

This instrument was prepared by: Chad C. Freeman, Attorney at Law, 26 Court Square, Mocksville, NC 27028 NO TITLE SEARCHES REQUESTED OR PERFORMED
Brief description for the Index: TRACTS

THIS DEED made this 12 day of March, 2012, by and between

GRANTOR	GRANTEE
LESLIE REAVIS BRADLEY (Divorced) ~~XXXXXXX~~ 1474 Cornatzer Road Mocksville, NC 27028	MG GALLINS FAMILY LLC 3195 Centre Park Blvd Winston-Salem, NC 27107

Enter in appropriate block for each party: name, address, and, if appropriate, character of entity, e.g. corporation or partnership.

The designation Grantor and Grantee as used herein shall include said parties, their heirs, successors, and assigns, and shall include singular, plural, masculine, feminine or neuter as required by context.

WITNESSETH, that the Grantor, for a valuable consideration paid by the Grantee, the receipt of which is hereby acknowledged, has and by these presents does grant, bargain, sell, convey and forever convey unto the Grantee in fee simple, all that certain lot or parcel of land situated in the City of Farmington Township, DAVIE County, North Carolina and more particularly described as follows:

SEE EXHIBIT A

Property Address: 222 Rockydale Lane, Mocksville, NC 27028

The property hereinabove described was acquired by Grantor by instrument recorded in Book 884 page 557.

A map showing the above described property is recorded in Plat Book _____ page _____.

TO HAVE AND TO HOLD the aforesaid lot or parcel of land and all privileges and appurtenances thereto belonging to the Grantee free and discharged from all right, title, claim or interest of the Grantor or anyone claims by, through or under him.

The Grantor covenants with the Grantee, that Grantor is seized of the premises in fee simple, and has the right to convey in fee simple, that title is marketable and free and clear from encumbrances, and that Grantor will warrant and defend the title against lawful claims of all persons.

Easement and restrictions of record: See attached Exhibit A

IN WITNESS WHEREOF, the Grantor has caused this instrument to be duly executed and delivered.

Leslie Reavis Bradley (SEAL) This the 13 day of March, 2012
LESLIE REAVIS BRADLEY, Grantor

****

State of North Carolina Davie County

I, the undersigned Notary Public of the County and State aforesaid, certify that

Leslie Reavis Bradley Personally appeared before me this day and acknowledged the due Execution of the foregoing instrument for the purposes therein expressed. Witness my hand and Notarial stamp or seal this 13th day of

March, 2012.

CRYSTAL F WEST
NOTARY PUBLIC
DAVIE COUNTY, NC
MY COMMISSION EXPIRES:

Crystal F. West
Notary Public

My Commission Expires: 2/14/13

****

State of North Carolina _____ County

I, the undersigned Notary Public of the County and State aforesaid, certify that _____

_____ Personally appeared before me this day and acknowledged the due execution of the foregoing instrument for the purposes therein expressed. Witness my hand and Notarial stamp or seal this _____ day of _____, 2012.

_____
Notary Public

My Commission Expires: ___/___/_____

****

The foregoing Certificate(s) of _____ is/are certified to be correct. This instrument and this certificate are duly registered at the date and time and in the Book and Page shown on the first page hereof.

_____ Register of Deeds for _____ County

By: _____ Deputy/Assistant - Register of Deeds

DAVIE COUNTY
DEVELOPMENT SERVICES
298 EAST DEPOT ST. MOCKSVILLE, NORTH CAROLINA 27028
PH :(336)753-6050 FAX :(336)751-7689

August 26, 2015

M.G Gallins Family, LLC
Gallins Family Farm
222 Rocky Dale Lane
Mocksville, NC 27028

Re: Zoning Determination

Dear Mr. Gallins,

Gallins Family Farm located at 222 Rocky Dale Lane, Mocksville, NC and further described as Davie County Tax Parcels E5/23 and E5/2301 was determined to be a Bona Fide Farm by the Davie County Board of Adjustment at its meeting on August 17th 2015. The provisions of the Davie County Zoning Ordinance shall not apply to Bona Fide Farms.

If I may be of further assistance, please let me know.

Sincerely,

Andrew Meadwell
Davie County
Development Services

Prepared by and return to Davie County, 298 E Depot Street, Mocksville, NC 27028

NORTH CAROLINA
DAVIE COUNTY

RESOLUTION REVERSING DECISION OF ZONING ENFORCEMENT OFFICER

The Board of Adjustment for the County of Davie (Board), having held a hearing on August 17, 2015 to hear an appeal on the decision of the zoning enforcement officer as filed by MG Gallins LLC (Gallins) regarding the use of property located at 222 Rocky Dale Lane, Mocksville, NC, and having heard all of the evidence and arguments presented at the hearing, makes the following FINDINGS OF FACT and draws the following CONCLUSIONS:

There was substantial evidence entered in the record. The following Exhibits were made a part of the record and accepted by the Board without objection and are relevant to its decision:

1. Exhibit 1- the zoning definitions of 155.001.
2. Exhibit 2- North Carolina General Statue 153A-340.
3. Exhibit 3- the goodness grows bag.
4. Exhibit 4 the conservation agreement.
5. Exhibit 5- the farm sales tax exemption.
6. Exhibit 6- the property tax deferment from Davie County.
7. Exhibit 7 -schedule B to the corporate tax return.
8. Exhibit 8 - the forestry management plan.
9. Exhibit 9 -an aerial photograph of the property showing the forestry management area.
10. Exhibit 10- an aerial of the Davie county tax map.
11. Exhibit 11 -an aerial picture of the area that was used in the composting process.
12. Exhibit 12- a second aerial of the composting process just in more detail.
13. Exhibit 13- Mr. Meadwell's letter of April 23, 2015.
14. Exhibit 14- the first letter from Mr. Sturges dated May 12, 2015.
15. Exhibit 15 -the second letter from Mr. Sturges dated July 7, 2015.
16. Exhibit 16 -the compost facility picture.
17. Exhibit 17- the affidavit from Mr. Gallagher at DENR.

Based upon the oral testimony presented and exhibits accepted by the Board, the Board of Adjustment for the County of Davie hereby makes the following findings of fact:

1. The Gallins Farm does not constitute a landfill under the zoning ordinance of Davie County.
2. The Gallins Farm located at 222 Rocky Dale Lane, Mocksville, NC is a bona fide farm.
3. As a bona fide farm, the Gallins Farm is not regulated by the Davie County Zoning Ordinance and is permitted to operate its composting activity as a matter of right.
4. Gallins Farm's compost product is recognized as a "Goodness Grows in North Carolina" product and Gallins Farm has Conservation Agreement with Davie County.
5. Gallins Farm has a sales tax exemption certificate issued by the NC Department of Revenue which is further evidence that it is being used for a bona fide farm activity.
6. Gallins Farm participates in the Present Use Agricultural Value Program which is further evidence that it is being used for a bona fide farm activity.

7. Gallins Farm files a federal tax schedule concerning its conditional farm exemption status which is further evidence that it is being used for a bona fide farm activity.
8. Gallins Farm has a current Forest Management Plan which is further evidence that it is being used for a bona fide farm activity.
9. Gallins Farm's composting activity takes place on a portion of the property covered by the Forest Management Plan.
10. Gallins Farm's composting activity is related and incidental to the use of the property as a bona fide farm.

THEREFORE, BASED UPON THE FOREGOING FINDINGS OF FACT, IT IS ORDERED that the decision of the Zoning Enforcement Officer is hereby:

( ) Affirmed

(X) Reversed and the MG Gallins, LLC property located at 222 Rocky Dale Lane, Mocksville, NC shall be considered a bona fide farm. Further, the composting activity conducted at the property shall be deemed to be activity related to a bona fide farm use.

( ) Modified as follows:_____

Ordered this 28th day of August, 2015.

Michael Branham, Chairman

ATTEST: Andrew Meadwell

Andrew Meadwell, Planning Director

Note: If you are dissatisfied with the decision of this Board, an appeal may be taken to the Superior Court of Davie County within 30 days after receipt of this order.