Permit:	26-02
Name:	Longstreet Road MSW Landfill
County:	Cumberland
Shipped Date:	
Box:	SW-11-008
Document Type:	Other (O)
Document Date:	12/3/1997
Division:	Waste Management (WM)
Sub-Division:	Solid Waste (SW)
Document Category:	Facility (F)
Document Group:	Authorization or Permit (P)
Description:	Map: Closure Plan. Maps in Roll: 8

LONGSTREET ROAD
MSWLF CLOSURE PLAN
FORT BRAGG , NORTH CAROLINA

PROJECT NO. FW-00803-4

APPROVED
DIVISION OF SOLID WASTE MANAGEMENT
DATE 12/3/97 BY SWL

ASHE ARCHITECTS-ENGINEERS-PLANNERS, INC. CORPORATE SEAL 1968 NORTH CAROLINA

NORTH CAROLINA PROFESSIONAL SEAL 20842 ENGINEER

7/11/97

Approved under Transportation Permit No. 36-02 Cumberland County 12/3/97

Fort Bragg (LCID 0202) Longstreet Rd MSWLF Cumberland County

INDEX OF DRAWINGS

SHEET NUMBER	TITLE
1	COVER
2	LOCATION AND VICINITY MAP
3	LANDFILL CLOSURE GRADING
4	LANDFILL CAP GRADING
5	GAS VENT LOCATIONS
6	CLOSURE AND CAP CROSS-SECTIONS
7	DETAILS

STANDARD ABBREVIATIONS

A

A.C.	AIR CONDITIONED
A.D.	AREA DRAIN
A.F.F.	ABOVE FINISH FLOOR
A.H.U.	AIR HANDLING UNIT
ALT.	ALTERNATE
ALUM.	ALUMINUM
AMP.,A	AMPERES
A.O.	ACCESS OPENING
APPROX.	APPROXIMATELY
ARCH.	ARCHITECTURAL
A.T.C.	ACOUSTICAL TILE CEILING
A.B.	ANCHOR BOLT
A.W.G.	AMERICAN WIRE GAUGE

B

BAL	BALANCE
BD	BOARD
BLDG.	BUILDING
BLK.	BLOCK
BM.	BEAM
BOT.	BOTTOM
BRG.	BEARING
B.T.U.H.	BRITISH THERMO UNIT/HR

C

CAB.	CABINET
CAP.	CAPACITY
C/B	CIRCUIT BREAKER
C.D.	CEILING DIFFUSER
CEM.	CEMENT
CER.	CERAMIC
C.F.M.	CUBIC FEET/MINUTE
CIRC.	CIRCULATING
C.J.	CONTROL JOINT
CK'D	CHECKERED
CKT.	CIRCUIT
℄	CENTERLINE
CEIL.,CLG.	CEILING
CLO.	CLOSET
C.M.U.	CONCRETE MASONRY UNIT
C.O.	CLEAN OUT
COL.	COLUMN
CONC.	CONCRETE
COND.	CONDENSATE
CONN.	CONNECTION
CONST.	CONSTRUCTION
CONT.	CONTINUOUS
CONT'R.	CONTRACTOR
CONTR.JT.	CONTRACTION JOINT
C.T.	CERAMIC TILE
C.T.B.	CERAMIC TILE BASE
C. TO C.	CENTER TO CENTER
CU. FT.,CF.	CUBIC FEET

D

DET.	DETAIL
DIA.	DIAMETER
DIFF.	DIFFUSER
DIM.	DIMENSION
DISC.	DISCONNECT
DN.	DOWN
DR.	DOOR
D.S.	DOWNSPOUT
DWG.(S)	DRAWING (S)
DSB	DOUBLE STRENGTH "B" GLASS

E

EA.	EACH
E.C.	EMPTY CONDUIT
E.F.	EXHAUST FAN
EL.,ELEV.	ELEVATION
ELEC.	ELECTRIC
EQUIP.	EQUIPMENT
E.W.	EACH WAY
E.W.C.	ELECTRIC WATER COOLER
EXH.	EXHAUST
EXP.JT.	EXPANSION JOINT
EXT.	EXTERIOR
EXIST.	EXISTING

F

F.A.	FIRE ALARM
F.C.	FLEXIBLE CONNECTION
F.D.	FLOOR DRAIN
F.E.C.	FIRE EXTINGUISHER CABINET
FIN.	FINISH
FL.	FLOOR
FTG.	FOOTING
FND.	FOUNDATION

G

GA.	GAGE
GAL.	GALLON
GALV.	GALVANIZED
G.F.E.	GOVERNMENT FURNISHED EQUIPMENT
GL.	GLASS
GND.	GROUND
GOV'T.	GOVERNMENT
G.P.H.	GALLONS/HOUR
G.P.M.	GALLONS/MINUTE
GR.	GRILLE
G.W.B.	GYPSUM WALL BOARD
GYP.	GYPSUM

H

H.	HIGH
H.B.	HOSE BIB
H.C.	HOLLOW CORE
HT.	HEIGHT
H.M.	HOLLOW METAL
H.P.	HORSE POWER
HR.	HOUR
HTG.	HEATING
HTR.	HEATER
HVAC.	HEATING, VENTILATION, AND AIR CONDITIONING
HW.,HDWE.	HARDWARE
HYD.	HYDRANT
HORIZ.	HORIZONTAL

I

I.D.	INSIDE DIAMETER
I.E.	INVERT
IN.	INCHES
INCAND.	INCANDESCENT
INSUL.	INSULATION
INT.	INTERIOR

J

J.B.	JUNCTION BOX
JCT.	JUNCTION
JT.	JOINT

K

KVA	KILOVOLT AMPERE
KW	KILOWATT

L

LB.	POUND
LG.	LONG
L.P.	LIGHTING PANEL
LTG.	LIGHTING
LAV.	LAVATORY

M

M.	MOTOR
MAINT.	MAINTENANCE
MAX.	MAXIMUM
M.P.D.	MAIN DISTRIBUTION PANEL
MECH.	MECHANICAL
MTL.	METAL
MIN.	MINIMUM
MISC.	MISCELLANEOUS
M.O.	MASONRY OPENING
M.T.	METAL THRESHOLD
MTD.	MOUNTED
MTG.	MOUNTING
M.V.	MECHANICAL VENTILATION
M.G.T.	MATTE GLAZE TILE

N

N.A.	NOT APPLICABLE
N.I.C.	NOT IN CONTRACT
NO.,#	NUMBER

O

O.A.	OUTDOOR AIR
O.C.	ON CENTER
O.D.	OUTSIDE DIAMETER
O.H.	OVERHEAD
OL.	OVERLOAD
OPNG.	OPENING
OPP.	OPPOSITE
O.S.D.	OPEN SIGHT DRAIN

P

P.	PAPER
PART'N.	PARTITION
PER	PERIMETER
P.,PL	PLATE
PLB'G.	PLUMBING
PLYWD.	PLYWOOD
PNL.	PANEL
PRESS.	PRESSURE
PSF	POUNDS/SQUARE FOOT
PSI	POUNDS/SQUARE INCH
PSIG	POUNDS/SQUARE INCH GAGE
PT.	POINT
PTD.	PAINTED
P.T.D.	PAPER TOWEL DISPENSER

Q

QTR.	QUARTER
QUAN.	QUANTITY

R

R.	RISER
R.A.	RETURN AIR
RAD.	RADIUS
RD.	ROUND
REC'D.	RECESSED
RECIRC.	RECIRCULATING
RECP.	RECEPTACLE
REG.	REGISTER
REINF.	REINFORCING
REQ'D.	REQUIRED
RET.	RETURN
R.G.	RETURN GRILLE
RM.	ROOM
R.P.M.	REVOLUTIONS/MINUTE

S

S.	SUPPLY
S.A.	SUPPLY AIR
SCH.	SCHEDULE
SECT.	SECTION
SERV.	SERVICE
SHT.	SHEET
S.J.	SLIP JOINT
SPEC.	SPECIFICATIONS
SQ. FT.,SF	SQUARE FEET
STL.	STEEL
STOR.	STORAGE
STRUC.	STRUCTURAL
SUSP.	SUSPENDED
SW.	SWITCH
STD.	STANDARD

T

T.,TOIL.	TOILET
TEL.	TELEPHONE
TEMP.	TEMPERATURE
THK.	THICKNESS
THD.	THRESHOLD
TYP.	TYPICAL
T.T.D.	TOILET TISSUE DISPENSER
T.O.S.	TOP OF STEEL
T&G	TONGUE & GROOVE
TR.	TREAD

U

U.O.N.	UNLESS OTHERWISE NOTED

V

V.	VOLT
V.C.T.	VINYL COMPOSITION TILE
VENT.	VENTILATION
VERT.	VERTICAL
VTR.	VENT THRU ROOF

W

W.	WATT
W/	WITH
WD.	WOOD
W.D.	WINDOW DIMENSION
W.G.	WATER GAGE
WP.	WEATHERPROOF
WTR.	WATER
W.W.F.	WELDED WIRE FABRIC
W.C.	WATER CLOSET
W.H.	WATER HEATER

SECTION SYMBOLS

VIEW SECTION — —

VIEW SECTION

3 / 4|8

- SECTION OR DETAIL IDENTIFICATION NUMBER
- SHEET NUMBER ON WHICH SECTION OR DETAIL IS DRAWN
- SHEET NUMBER WHICH SECTION OR DETAIL CONDITION IS TAKEN

SYMBOL WHERE SECTION IS TAKEN

3 / 4|8 SECTION/DETAIL

TITLE WHERE SECTION IS DRAWN

3 / 4|8

- ELEVATION IDENTIFICATION NUMBER
- SHEET NUMBER WHERE ELEVATION IS SHOWN
- SHEET NUMBER WHICH ELEVATION IS TAKEN

ELEVATION SYMBOL

MATERIAL INDICATIONS

- EARTH
- EARTH (COMPACTED)
- GRAVEL
- CONCRETE
- MORTAR–CEMENT–PLASTER–STUCCO
- CMU (SMALL SCALE)
- CMU (LARGE SCALE)
- BRICK (ELEVATION)
- BRICK (SECTION)
- METAL (ELEVATION)
- STEEL (SECTION)
- STEEL (SMALL SCALE)
- INSULATION (RIGID)
- INSULATION (BATT)
- INSULATION (SPRAY–FOAM)
- WOOD (FINISH)
- WOOD (ROUGH)
- WOOD (BLOCKING)
- PLYWOOD
- GLASS (ELEVATION)

BASIC DESIGN DATA

AREA: _____ VOLUME: _____ NO. FLOORS: _____

CONSTRUCTION: NOT APPLICABLE

TYPE: _____ LIFE: _____

FOUNDATION: _____ EXT. WALLS: _____

FLOORS: _____ INT. PARTITIONS: _____

ROOF CONSTR. _____ ROOF COVERING: _____

TYPE OF FUEL: _____ HEATING ZONE: _____

TYPE OF HEATING SYSTEM: _____

AIR CONDITIONING DESIGN CONDITIONS:

"U" VALUE: WALLS: _____ ROOF: _____

STRUCTURAL DESIGN

SOIL BEARING _____ SEISMIC ZONE: _____

ROOF LOAD DL _____ LL _____ WIND LOAD _____

MARK	DATE	DESCRIPTIONS
		REVISIONS

REVISION	DATE	DESCRIPTION	BY

DIRECTORATE OF PUBLIC WORKS AND ENVIRONMENT
FORT BRAGG, NORTH CAROLINA

STAFF APPROVAL

FIRE CHIEF

CHIEF ENGR.PLANS & REAL PROPERTY

CHIEF ENGINEERING BRANCH

CHIEF INSPECTION SECTION

CHIEF BLDG. AND GROUNDS DIV.

CHIEF ENVIRONMENTAL DIVISION

LONGSTREET ROAD
MSWLF CLOSURE
PLAN
FORT BRAGG , NORTH CAROLINA

APPROVED: _____ DATE: _____
COL. C.E. DIR. OF FAC. ENGR.

SCALE: NONE DRAWN BY: ---

USING SERVICE

SPEC. NO. FW-00803-4

DRAWING NUMBER
DPWE-5677 SHEET 1 OF 7

STIMMEL ASSOCIATES, P.A.
LANDSCAPE ARCHITECTURE • LAND PLANNING • CIVIL ENGINEERING
308 WEST FOURTH ST., SUITE 1-A WINSTON-SALEM, NC 27101
PHONE (910) 723-1067 FAX (910) 723-1069
PROJECT NO. 96142

RS&H®
REYNOLDS, SMITH AND HILLS, INC.
225 NORTH COURTENAY PARKWAY, SUITE C MERRITT ISLAND, FLORIDA 32953-5227
PHONE: (407) 454-8113 FAX: (407) 453-0223

F:\FT-BRAGG\LF-CLOSE\96142CV Thu Jul 10 15:19:25 1997

AREA INSIDE HEAVY LINE CONTAINS 2' CONTOUR INTERVALS
FROM RS&H LAND SURVEYORS, INC. FIELD SURVEY

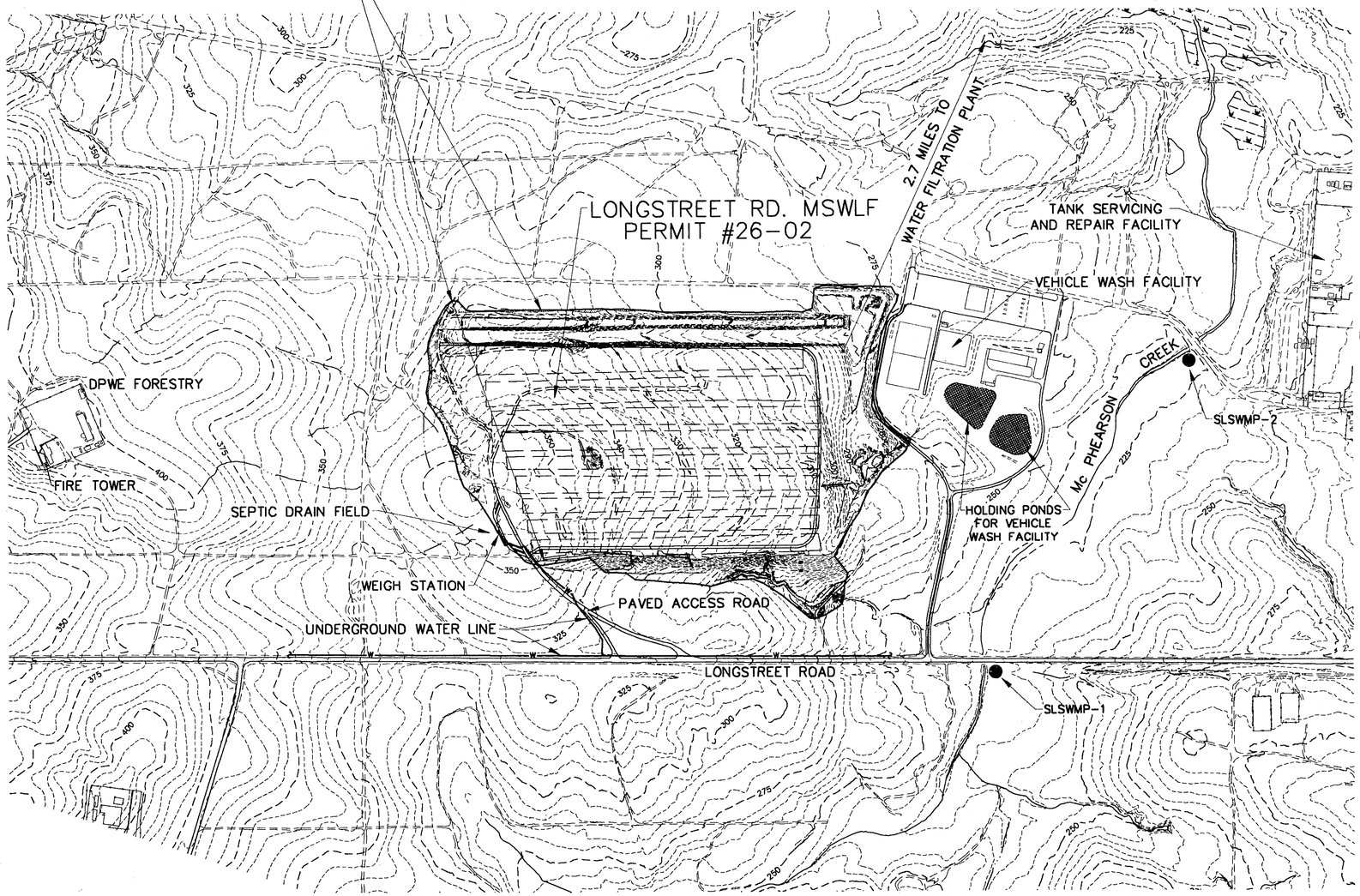

N

SCALE: 1" = 400'
400 0 400

SCALE OF MAP MAY BE REDUCED DUE TO METHODS OF REPRODUCTION.

NOTES:

1. THE CURRENT AND PROPOSED LAND USE IS FOR A U.S GOVERNMENT MILITARY RESERVATION. THE LANDFILL SITE AND SURROUNDING AREA IS NOT LOCATED WITHIN ANY LOCAL GOVERNMENT ZONING JURISDICATION.
2. THE PUBLIC WATER SUPPLY UTILITY IS FORT BRAGG DIRECTORATE OF PUBLIC WORKS AND ENVIRONMENT.
3. THERE ARE NO PRIVATE RESIDENCES WITHIN 2,000 FEET OF THIS MSWLF.
4. NO KNOWN OR POTENTIAL SOURCES OF CONTAMINATION EXCEPT:
   A. VEHICLE WASH FACILITY
   B. SEPTIC DRAIN FIELD AT WEIGH STATION
   C. THE EXISTING LANDFILL ITSELF
   D. FUEL TANKS IN THE TANK SERVICING AND REPAIR FACILITY

NOTE: MAPPING FROM FORT BRAGG GENERAL MAPS

RS&H ARCHITECTS-ENGINEERS-PLANNERS CORPORATE SEAL 1968 NORTH CAROLINA

NORTH CAROLINA PROFESSIONAL SEAL 17454 ENGINEER EDWARD N. COLLINS, JR.
8-8-95

FIGURE 9.2

DIRECTORATE OF PUBLIC WORKS AND ENVIRONMENT
FORT BRAGG, NORTH CAROLINA

LOCAL AREA STUDY MAP MSWLF PERMIT (26-02)

FORT BRAGG, NORTH CAROLINA

RS&H®
ARCHITECTS • ENGINEERS • PLANNERS, INC.
OAK BRANCH DRIVE, SUITE 2-A, 27407 PHONE: (910) 852-6152 FAX: (910) 255-3029
GREENSBORO, NORTH CAROLINA

SCOPE: LOCAL AREA MAP	DATE: 31 JUL 95
SCALE: SHOWN DRAWN BY: SCH	SPEC. NO. FW-00743-4
USING SERVICE	DRAWING NUMBER DPWE-5237 SHEET 1 OF 1

AEP NO. 395-0994-001

R:\SDSKPROJ\SWLF2602\DWG\0020CLAM 8-8-95 9:47:06 am EST

CELL #10

CELL #9

CELL #8

CELL #7

CELL #6

CELL #5

CELL #4

CELL #3

CELL #2

CELL #1

BENCH MARK
TRAVERSE PT. #2
NAIL ELEVATION 365.73'
N 506231.46
E 1983454.81

MONITOR WEIGH STATION AS PER GAS MONITORING PLAN

EXIST. WEIGH STATION

PAVED ACCESS RD.

VERTICAL EXPANSION

EXISTING PERMENANT SEDIMENT BASIN # 3

VEHICLE WASH FACILITY

EXISTING PERMENANT SEDIMENT BASIN # 1

EXISTING PERMENANT SEDIMENT BASIN # 2

GRAPHIC SCALE
100 0 50 100 200 400
(IN FEET)
1 inch = 100 ft.

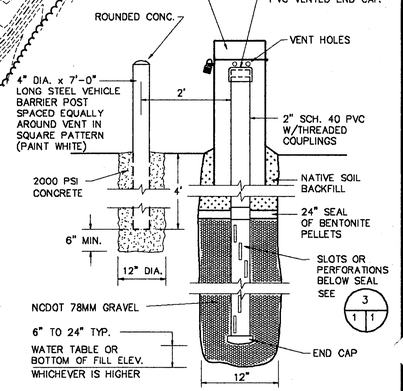

2 1 1 TYPICAL PERMANENT GAS MONITORING WELL
NOT TO SCALE

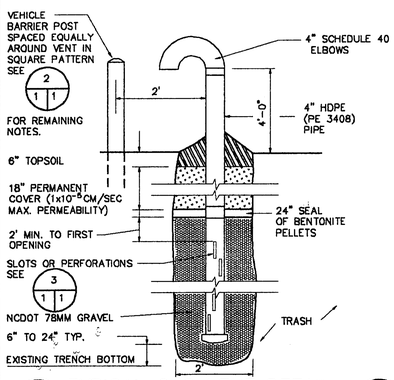

1 1 1 TYPICAL GAS VENT DETAIL
NOT TO SCALE

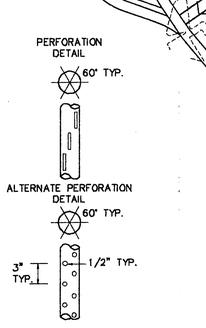

3 1 1 TYPICAL DETAIL PIPE PERFORATION
NOT TO SCALE

NOTES:

1. EASTERN AND WESTERN LIMITS OF EXISTING TRASH CELLS ARE APPROXIMATE, EXACT LIMITS HAVE NOT BEEN DETERMINED. NORTH AND SOUTH LIMITS OF EXISTING TRASH CELLS ESTABLISHED BY GEOPHYSICAL FIELD SURVEY PERFORMED BY LAW ENGINEERING, OCTOBER 22, 1992.
2. MONITOR BUILDINGS AT WASH RACK AS PER GAS MONITORING PLAN INCLUDING ENCLOSED SKIRT AROUND TRAILER OFFICE.

LEGEND

METHANE GAS VENT	⊙
NEW CONTOURS	—— 280 ——
EXISTING CONTOURS	------- 280 -------
NEW BERMS	ccccc
EXISTING TRASH CELLS	
GAS MONITOR WELL LOCATIONS W/IDENITY NO.	2 ⊗

RSH ARCHITECTS - ENGINEERS - PLANNERS, INC. CORPORATE SEAL 1968 NORTH CAROLINA

Edward R. Collins, III 12-12-94
NORTH CAROLINA PROFESSIONAL SEAL 17454 ENGINEER EDWARD R. COLLINS, III

DIRECTORATE OF PUBLIC WORKS AND ENVIRONMENT
FORT BRAGG, NORTH CAROLINA

GAS MONITORING PLAN FOR SANITARY LANDFILL

FORT BRAGG, NORTH CAROLINA

RS&H®
ARCHITECTS • ENGINEERS • PLANNERS, INC.
GREENSBORO, NORTH CAROLINA

SCOPE: LOCATION PLAN
DATE: 26 JUL 94
SCALE: SHOWN DRAWN BY: DER
SPEC. NO. FW-00743-4
USING SERVICE
DRAWING NUMBER DPWE-5241 SHEET 1 OF 1

AEP NO. 395-0994-002

R:\BRAGG\GASS_MON\9609DTR.DWG

NORTHERN TRAINING AREA

LITTLE RIVER

MANCHESTER ROAD

LITTLE RIVER

DIRECTORATE OF PUBLIC WORKS AND ENVIRONMENT BUILDING 3-1631

DIRECTORATE OF CONTRACTING BUILDING 1-1333

MILITARY RESERVATION BOUNDARY

MAC ARTHUR ROAD

BOUNDARY LANE LAKE

POPE AIR FORCE BASE

GREEN RAMP

YELLOW RAMP

SPRING LAKE

ANDREWS CHURCH LAKE

ANDREWS CHURCH ROAD

LCID LANDFILL

SANITARY LANDFILL MSWLF PERMIT #26-02

ELECTRIC SUBSTATION BUILDING 8-3722

AREA ENGINEER BLDG. M 2357 396-1211

MCKELLARS ROAD

MCKELLARS LAKE

BORROW PIT

DEMOLITION LANDFILL

PRATT STREET

BUTNER ROAD

REILLY STREET

McFAYDEN POND

COLE ST.

BIGLER ST.

LONGSTREET ROAD

RANDOLPH STREET

MURCHISON ROAD

TEXAS POND ROAD

LAMONT ROAD

SITE

LONGSTREET ROAD

GRUBER ROAD

NORMANDY DRIVE

HONEYCUTT RD.

HONEYCUTT

SIMMONS FIELD LAKE

BASTOGNE DRIVE

ACCESS ROAD

KNOX STREET

BRAGG BLVD.

SIMMONS ARMY AIRFIELD

SMITH LAKE

SOLID WASTE TRANSFER STATION

ARDENNES

COMMUNITY STREET

GRUBER ROAD

MILITARY RESERVATION BOUNDARY

ALL-AMERICAN DRIVE

Mc RIDGE ROAD

YORKTOWN

VICTOR ROAD

YADKIN ROAD

REILLY

CHICKEN ROAD

MILITARY RESERVATION BOUNDARY

MORGANTON ROAD

STREET ROAD

BOARD ROAD

CHICKEN ROAD

PLANK ROAD

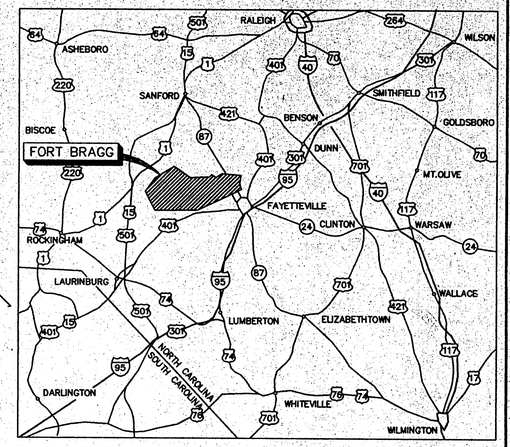

VICINITY MAP

0 5 10 20 30

SCALE IN MILES

VICINITY MAP LEGEND

- ROADS
- STREETS
- RAILROADS
- INSTALLATION BOUNDARIES
- INTERSTATE ROUTE
- U.S.ROUTE
- STATE ROUTE
- LAKES
- HAUL ROUTE

N

2000 0 2000

SCALE IN FEET

SCALE OF MAP MAY BE REDUCED DUE TO METHODS OF REPRODUCTION

CONSTRUCTION LEGEND

- EX. PAVED ROAD
- EX. DIRT ROAD
- EX. TRAIL
- EX. BUILDING
- EX. FENCE
- EX. DRAINAGE PIPES
- EX. TREES
- VERT. & HORIZ. CONTROL
- EX. CONTOUR LABELS (810)
- EX. 10' CONTOURS
- EX. 2' CONTOURS
- FINAL COVER GRADING (BY OTHERS)
- NEW CONTOUR LABELS (810)
- NEW 2' CONTOURS
- GAS VENTS
- EX. POLE
- EX. POST
- EX. SIGN
- EX. UTILITY POLE
- TEMPORARY SILT FENCE
- LIMITS OF CAP
- RIP RAP
- DITCH PROTECTION
- EXISTING TO BE REMOVED

NSPE ARCHITECTS-ENGINEERS-PLANNERS CORPORATE SEAL 1968 NORTH CAROLINA

NORTH CAROLINA PROFESSIONAL SEAL 20842 ENGINEER PATRICK JEROME WILLIAMS

MARK	DATE	DESCRIPTIONS

REVISIONS

STIMMEL ASSOCIATES, P.A.
LANDSCAPE ARCHITECTURE • LAND PLANNING • CIVIL ENGINEERING
309 WEST FOURTH ST., SUITE 1-A WINSTON-SALEM, NC 27101
PHONE (910) 723-1067 FAX (910) 723-1069
PROJECT NO. 96142

RS&H®
REYNOLDS, SMITH AND HILLS, INC.
225 NORTH CUTEWAY PARKWAY, SUITE C PHONE: (407) 454-0113 FAX: (407) 453-0223
MERRITT ISLAND, FLORIDA 32953-5227

DIRECTORATE OF PUBLIC WORKS AND ENVIRONMENT
FORT BRAGG, NORTH CAROLINA

LONGSTREET ROAD MSWLF CLOSURE PLAN

FORT BRAGG, NORTH CAROLINA

SCOPE: VICINITY MAP

DATE: 11-JULY-97

SCALE: SHOWN DRAWN BY: JAL

USING SERVICE

SPEC. NO. FW-00803-4

DRAWING NUMBER

DPWE-5677 SHEET 2 OF 7

F:\FT-BRAGG\LF-CLOSE\96142VIC Thu Jul 10 16:48:13 1997

NOTES

1. ALL GRADING SHOWN ON THIS SHEET TO BE DONE BY OTHERS PRIOR TO CONSTRUCTION.
2. DEMOLITION SHOWN ON THIS SHEET IS INCLUDED IN THIS CONTRACT.
3. ALL MATERIALS TO BE DISPOSED OF IN DEMOLITION SHALL BE TAKEN TO THE DEMOLITION LANDFILL FOR PROPER DISPOSAL.
4. ALL SEDIMENT FENCE TO BE REMOVED CONSISTS OF THE FOLLOWING COMPONENTS:
   - 6' STEEL CHANNEL POSTS
   - 32" TALL, 14 GA. (6"X6" GRID) STEEL WIRE FENCE
   - 2' TALL PLASTIC SILT FENCING
5. ALL TRASH FENCE TO BE REMOVED CONSISTS OF THE FOLLOWING COMPONENTS:
   - 8' TALL CHAIN LINK FENCING
   - 6' TALL CHICKEN WIRE (ABOVE CHAIN LINK)
   - 1400 LF 3/8" WIRE CABELING (TO HOLD UP CHAIN LINK FENCING)

RS&H ARCHITECTS-ENGINEERS-PLANNERS INC. CORPORATE SEAL 1968 NORTH CAROLINA

NORTH CAROLINA PROFESSIONAL SEAL 20842 PATRICK G. JENNINGS II

MARK	DATE	DESCRIPTIONS
△	..	..

REVISIONS

STIMMEL ASSOCIATES, P.A.
LANDSCAPE ARCHITECTURE • LAND PLANNING • CIVIL ENGINEERING
305 EAST FOURTH ST., SUITE 1-A KINSTON-SALEM, NC 27101
PHONE (910) 723-1067 FAX (910) 723-1069
PROJECT NO. 96142

RS&H®
REYNOLDS, SMITH AND HILLS, INC.
2235 NORTH COURTENAY PARKWAY, SUITE C PHONE: (407) 454-6113 FAX: (407) 453-0223
MERRITT ISLAND, FLORIDA 32953-5227

DIRECTORATE OF PUBLIC WORKS AND ENVIRONMENT
FORT BRAGG, NORTH CAROLINA

LONGSTREET ROAD MSWLF CLOSURE PLAN

FORT BRAGG, NORTH CAROLINA

SCOPE: LANDFILL CLOSURE GRADING
DATE: 11-JULY-97
SCALE: 1"=100' DRAWN BY: SCH
SPEC. NO. FW-00803-4
DRAWING NUMBER: DPWE-5677 SHEET 3 OF 7

USING SERVICE

F:\FT-BRAGG\LF-CLOSE\96142GE1 Thu Jul 10 15:42:56 1997

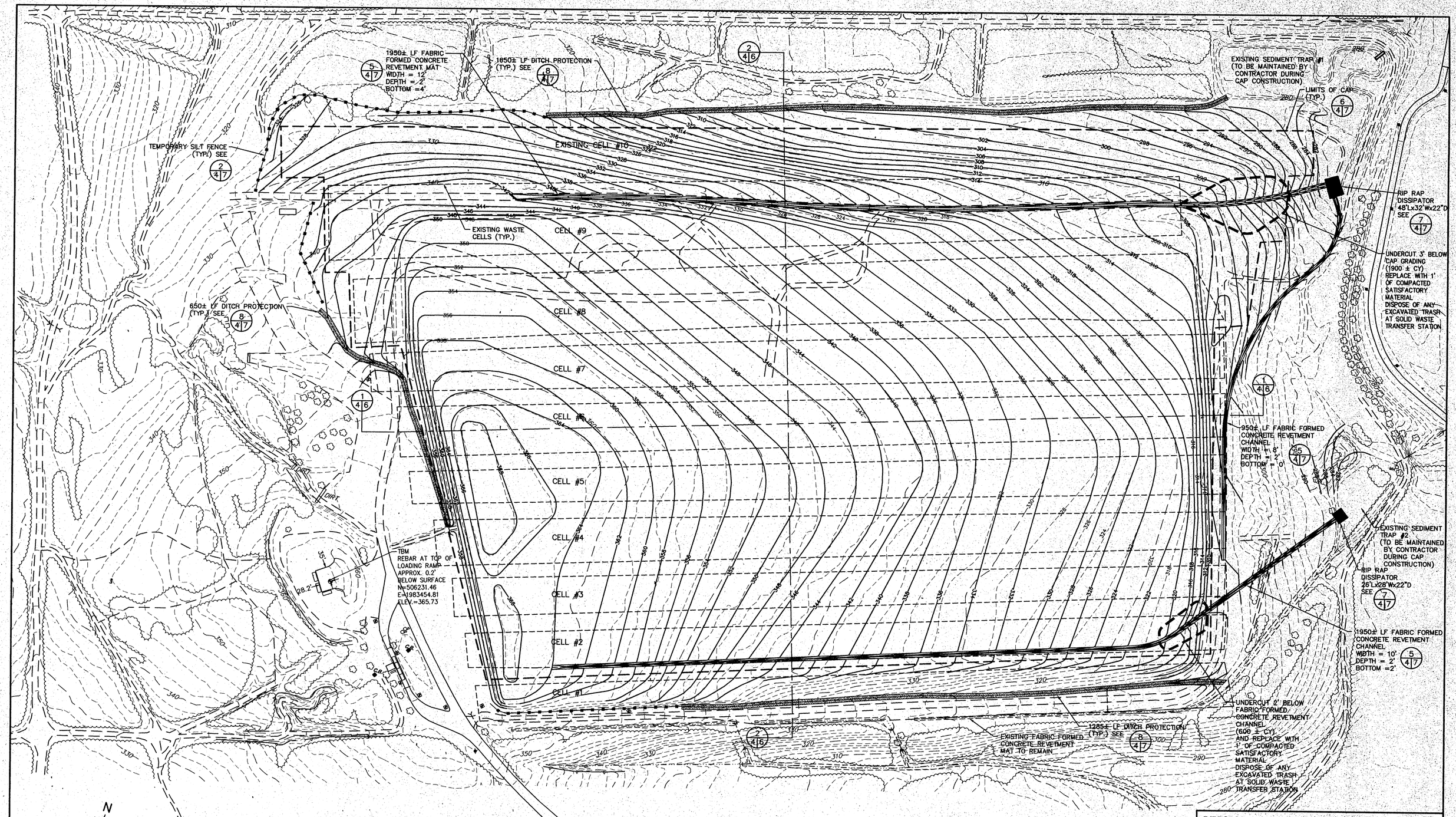

NOTES

1. ALL FABRIC FORMED CONCRETE REVETMENT CHANNELS SHALL EXTEND TO THE BOTTOM OF SEDIMENT TRAPS.
2. ANY DAMAGE CAUSED TO MEMBRANE (GEO-SYNTHETIC CLAY LINER) DURING CONSTRUCTION SHALL BE REPAIRED BY THE CONTRACTOR AT HIS EXPENSE. REPAIRS CHALL MEET OR EXCEED THE SAME SPECIFICATION AS THE ORIGIONAL MEMBRANE INSTALLATION.

RS&H ARCHITECTS-ENGINEERS-PLANNERS INC. CORPORATE SEAL 1968 NORTH CAROLINA

NORTH CAROLINA PROFESSIONAL SEAL 20842 ENGINEER PATRICK J. JENNINGS II

MARK	DATE	DESCRIPTIONS

REVISIONS

STIMMEL ASSOCIATES, P.A.
LANDSCAPE ARCHITECTURE • LAND PLANNING • CIVIL ENGINEERING
309 WEST FOURTH ST., SUITE 1-A WINSTON-SALEM, NC 27101
PHONE (910) 723-1067 FAX (910) 723-1069
PROJECT NO. 96142

RS&H
REYNOLDS, SMITH AND HILLS, INC.
2235 NORTH COURTENAY PARKWAY, SUITE C PHONE: (407) 454-6113 FAX: (407) 453-0223
MERRITT ISLAND, FLORIDA 32953-5227

DIRECTORATE OF PUBLIC WORKS AND ENVIRONMENT
FORT BRAGG, NORTH CAROLINA

LONGSTREET ROAD MSWLF CLOSURE PLAN

FORT BRAGG, NORTH CAROLINA

SCOPE: CAP GRADING
DATE: 11-JULY-97
SCALE: 1"=100' DRAWN BY: SCH
SPEC. NO. FW-00803-4
DRAWING NUMBER DPWE-5677 SHEET 4 OF 7

F:\ACAD\FT-BRAGG\LF-CLOSE\96142GE2.DWG
F:\FT-BRAGG\LF-CLOSE\96142GE2 Thu Jul 10 15:47:48 1997

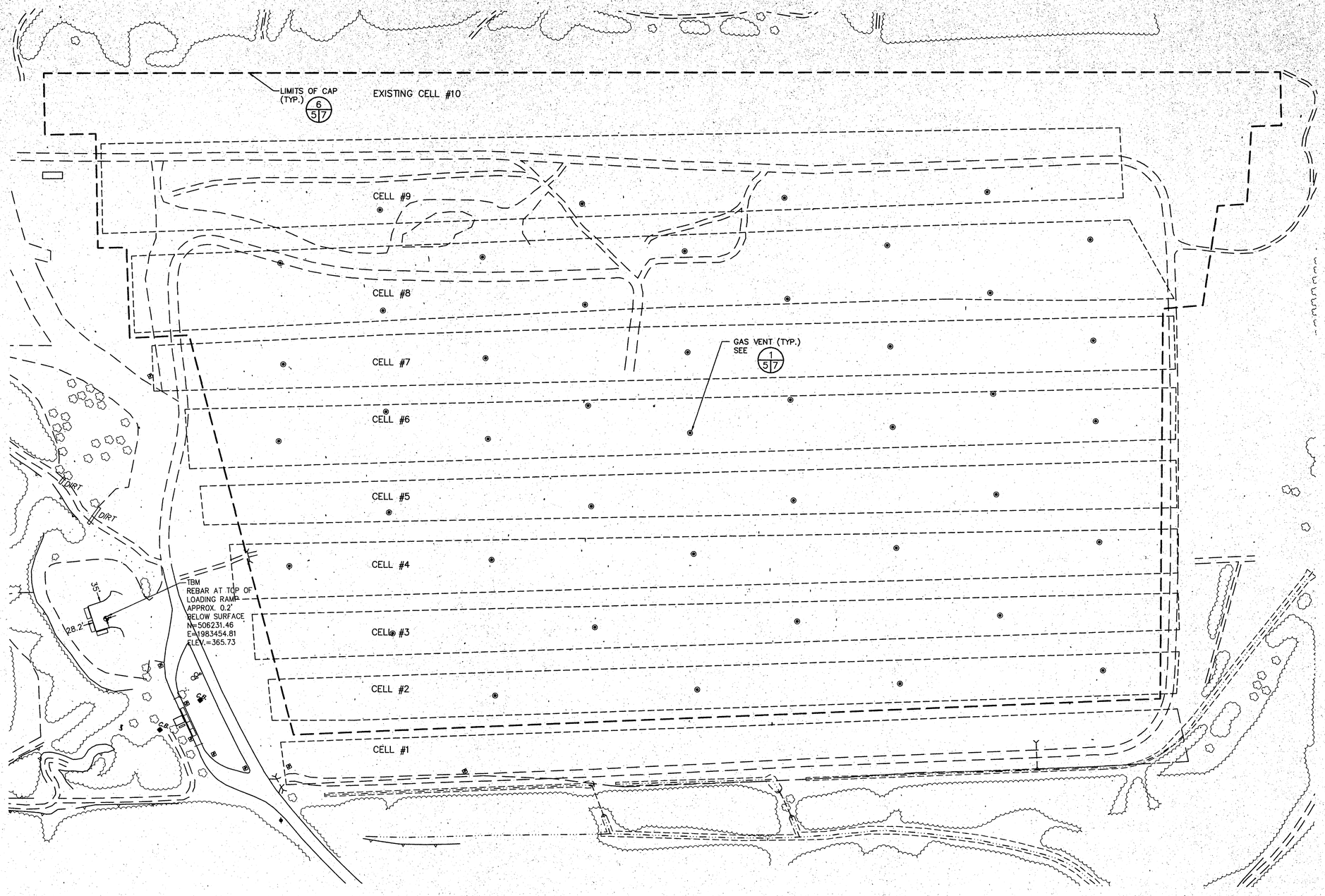

GAS VENT LOCATIONS		
NORTHING	EASTING	GROUND ELEV.
506312.08	1984233.90	356.80
506441.69	1984612.32	342.20
506571.29	1984990.74	332.30
506714.55	1985364.75	320.30
506759.21	1985139.08	327.70
506629.61	1984760.66	338.20
506500.01	1984382.24	350.80
506370.40	1984003.82	363.50
506438.05	1983769.24	368.10
506567.65	1984147.66	359.60
506697.25	1984526.08	347.70
506826.86	1984904.51	334.10
506956.46	1985282.93	323.00
506986.26	1985061.32	330.90
506856.66	1984682.89	342.60
506727.06	1984304.47	353.70
506597.45	1983926.05	365.20
506668.26	1983675.95	368.50
506794.70	1984069.90	359.00
506924.31	1984448.32	347.10
507053.91	1984826.74	335.00
507183.51	1985205.17	322.90
507175.47	1984996.51	329.30
507045.87	1984618.09	341.10
506916.27	1984239.67	350.10
506786.67	1983861.25	362.70
506816.47	1983639.64	361.90
506946.07	1984018.06	353.90
507075.67	1984396.48	343.80
507205.28	1984774.90	333.50
507334.88	1985153.33	318.20
507364.68	1984931.71	322.20
507235.08	1984553.29	335.50
507105.48	1984174.87	345.40
506975.88	1983796.45	356.50
507005.68	1983574.84	355.50
507135.28	1983953.26	347.00
507264.89	1984331.68	337.70
507394.49	1984710.10	326.50
507524.09	1985088.52	312.40
507553.89	1984866.91	313.80
507424.29	1984488.49	328.70
507294.69	1984110.07	340.00
507165.09	1983731.65	349.20

GAS VENT NOTES

1. ALL GAS VENTS SHALL BE 25' DEEP. SEE DETAIL 1/5|7
2. ALL TRASH DISPLACED BY GAS VENT INSTALLATION SHALL BE COLLECTED AND DISPOSED OF AT THE FORT BRAGG SOLID WASTE TRANSFER STATION. LOCATION AND HAUL ROUTE ARE SHOWN ON SHEET 2.
3. ANY DAMAGE CAUSED TO THE MEMBRANE (GEO-SYNTHETIC CLAY LINER) DURING CONSTRUCTION OF THE GAS VENTS SHALL BE REPAIRED BY THE CONTRACTOR AT HIS EXPENSE. REPAIRS SHALL MEET OR EXCEED THE SAME SPECIFICATION AS THE ORIGINAL MEMBRANE INSTALLATION.

N

SCALE: 1" =100'

100 0 100

REGISTERED ARCHITECTS-ENGINEERS-LANDSCAPE ARCHITECTS-PLANNERS CORPORATE SEAL 1968 NORTH CAROLINA

NORTH CAROLINA PROFESSIONAL SEAL 20842 ENGINEER PATRICK JENNINGS

MARK	DATE	DESCRIPTIONS
△	..	..

REVISIONS

STIMMEL ASSOCIATES, P.A.
LANDSCAPE ARCHITECTURE • LAND PLANNING • CIVIL ENGINEERING
305 WEST FOURTH ST., SUITE 1-A · WINSTON-SALEM, NC 27101
PHONE (910) 723-1081 FAX (910) 723-1085
PROJECT NO.: 96142

RS&H®
REYNOLDS, SMITH AND HILLS, INC.
225 NORTH COURTENAY PARKWAY, SUITE C MERRITT ISLAND,, PHONE: (407) 454-8113 FAX: (407) 453-0223 FLORIDA 32953-5227

DIRECTORATE OF PUBLIC WORKS AND ENVIRONMENT
FORT BRAGG, NORTH CAROLINA

LONGSTREET ROAD MSWLF CLOSURE PLAN

FORT BRAGG , NORTH CAROLINA

SCOPE: GAS VENT LOCATIONS
DATE: 11-JULY-97
SCALE: 1"=100' DRAWN BY: SCH
SPEC. NO. FW-00803-4
USING SERVICE
DRAWING NUMBER: DPWE-5677 SHEET 5 OF 7

F:\FT-BRAGG\LF-CLOSE\96142GV1 Thu Jul 10 17:06:43 1997

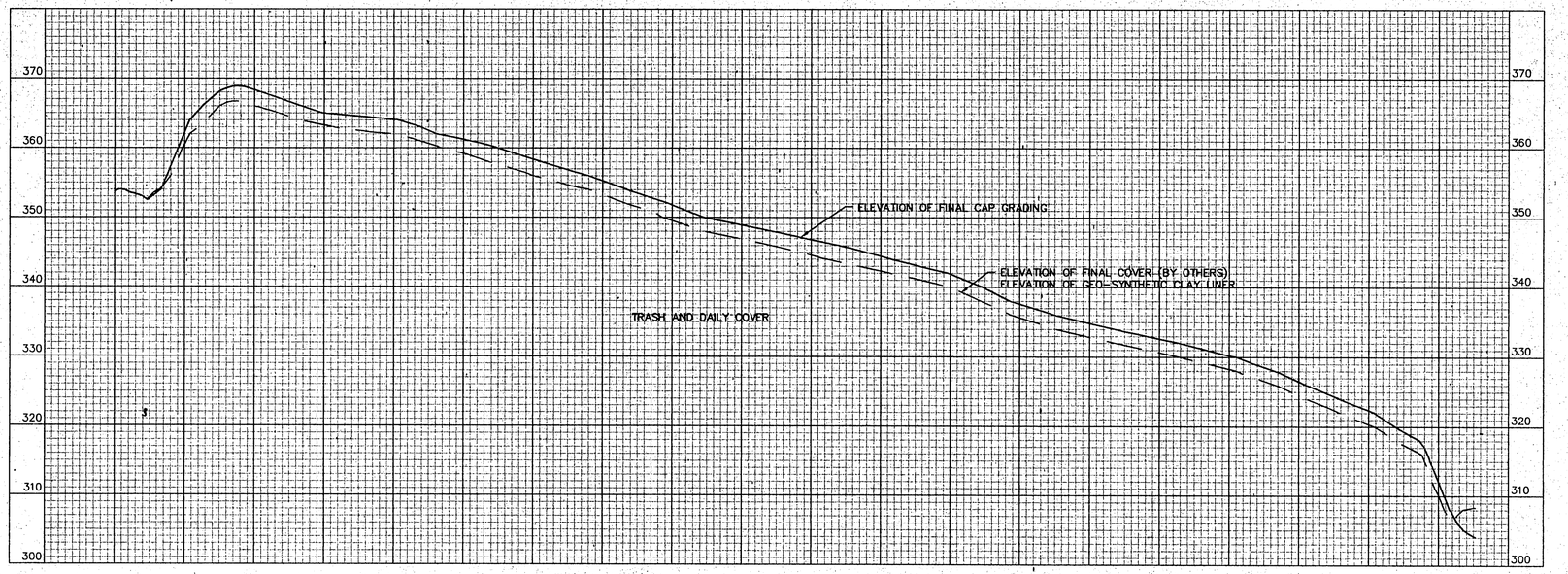

1 / 4 6 WEST TO EAST CROSS-SECTION
NOT TO SCALE

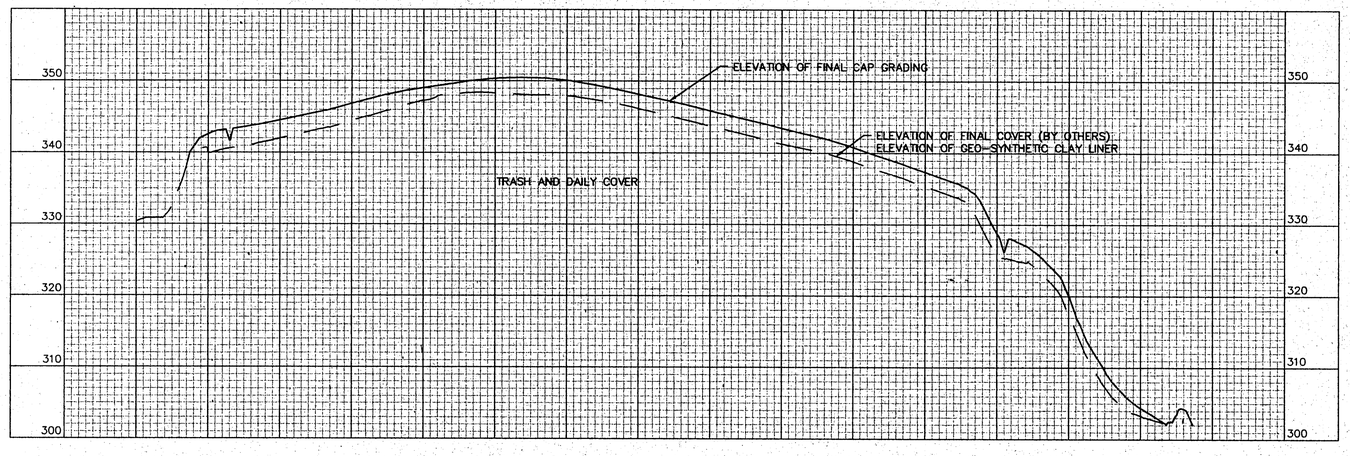

2 / 4 6 SOUTH TO NORTH CROSS-SECTION
NOT TO SCALE

RS&H ARCHITECTS-ENGINEERS-PLANNERS INC. CORPORATE SEAL 1968 NORTH CAROLINA

NORTH CAROLINA PROFESSIONAL SEAL 20842 ENGINEER PATRICK E. JENNINGS 7/11/97

MARK	DATE	DESCRIPTIONS

REVISIONS

STIMMEL ASSOCIATES, P.A.
LANDSCAPE ARCHITECTURE • LAND PLANNING • CIVIL ENGINEERING
308 WEST FOURTH ST. SUITE 1-A WINSTON-SALEM, NC 27101
PHONE (910) 723-1067 FAX (910) 723-1069
PROJECT NO. 96142

RS&H®
REYNOLDS, SMITH AND HILLS, INC.
2235 NORTH COURTENAY PARKWAY, SUITE C PHONE: (407) 454-6113 FAX: (407) 453-0223
MERRITT ISLAND, FLORIDA 32953-5227

DIRECTORATE OF PUBLIC WORKS AND ENVIRONMENT
FORT BRAGG, NORTH CAROLINA

LONGSTREET ROAD
MSWLF CLOSURE
PLAN
FORT BRAGG , NORTH CAROLINA

SCOPE: FINAL COVER AND CAP CROSS-SECTIONS
DATE: 11-JULY-97
SCALE: SHOWN DRAWN BY: SCH
SPEC. NO. FW-00803-4
USING SERVICE
DRAWING NUMBER DPWE-5677 SHEET 6 OF 7

F:\FT-BRAGG\LF-CLOSE\96142X1 Thu Jul 10 15:50:38 1997

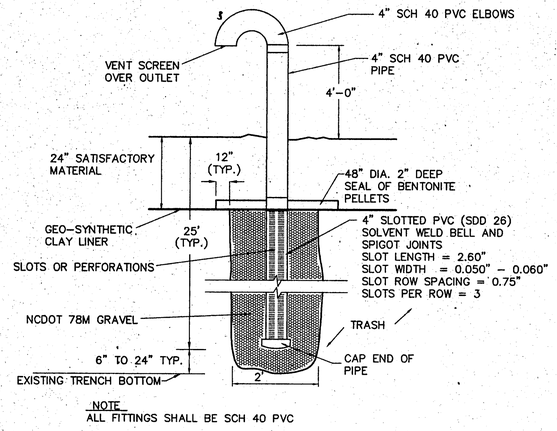

NOTE
ALL FITTINGS SHALL BE SCH 40 PVC

1 5 7 TYPICAL GAS VENT DETAIL
NOT TO SCALE

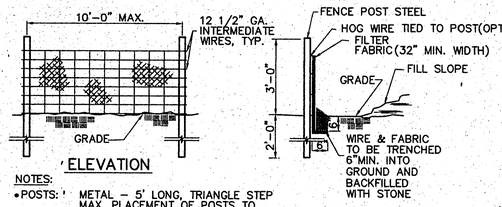

NOTES:
- POSTS: METAL – 5' LONG, TRIANGLE STEP MAX. PLACEMENT OF POSTS TO BE 10' APART.
- WIRE: 32" MIN. WIDTH HOGWIRE, 10 GA. LINE WIRE.
- FABRIC: 6 MIL POLYPROPOLENE
- SPACING: PLACEMENT OF POSTS USING HOGWIRE TO BE 10' APART. PLACEMENT OF POST WITHOUT HOGWIRE TO BE 6' APART.

2 4 7 7 TEMPORARY SILT FENCE
NOT TO SCALE

SEEDBED PREPARATION:
RIP THE AREA TO BE SEEDED TO A MINIMUM DEPTH OF 4-6 INCHES. REMOVE ALL LOOSE ROCK, ROOTS, ETC. LEAVING SURFACE SMOOTH AND UNIFORM.

SEEDING SCHEDULE:

SEED MIXTURES	PLANTING RATE/ACRE	PLANTING DATES
GERMAN MILLET (SETARIA ITALICA)	25 LBS/AC	MAR 1 TO SEP 30
RYE GRAIN (SECALE CEREALE L.)	25 LBS/AC	SEP 30 TO MAR 1

SOIL AMENDMENTS:

AGRICULTURAL LIMESTONE	2000 LBS/AC
FERTILIZER 10-20-20	800 LBS/AC

MULCH:

WOOD FIBER	4000 LBS/AC
OR WOOD CELLULOSE MATERIAL	1500 LBS/AC

** TACK WITH ASPHALT UNLESS APPLIED BY HYDROSEEDER

HYDROSEEDING:
MIX SPECIFIED SEED, FERTILIZER AND PULVERIZED MULCH IN WATER, USING EQUIPMENT SPECIFICALLY DESIGNED FOR HYDROSEED APPLICATION. CONTINUE MIXING UNTIL UNIFORMLY BLENDED INTO HOMOGENEOUS SLURRY SUITABLE FOR HYDRAULIC APPLICATION. APPLY SLURRY UNIFORMLY TO ALL AREAS TO BE SEEDED. RATE OF APPLICATION AS REQUIRED TO OBTAIN SPECIFIED SEEDING SOWING RATE.

3 4 7 7 TEMPORARY SEEDING
NOT TO SCALE

SEEDBED PREPARATION:
RIP THE AREA TO BE SEEDED TO A MINIMUM DEPTH OF 4-6 INCHES. REMOVE ROCK, ROOTS, ETC. LEAVING SURFACE SMOOTH AND UNIFORM.

SEEDING SCHEDULE:

SEED MIXTURES	PLANTING RATE/ACRE	PLANTING DATES
PENSACOLA BAHIAGRASS (PASPALUM NOTATUM)	50 LBS/AC	SEP 30 TO MAR 1
"APPALOW" SERICEA LESPEDEZA (UNSCARIFIED) (LESPEDEZA CUNEATA)	30 LBS/AC	
COMMON BERMUDAGRASS (HULLED) (CYNODON DACTYLON)	5 LBS/AC	
COMMON BERMUDAGRASS (UNHULLED) (CYNODON DACTYLON)	5 LBS/AC	
KOBE LESPEDEZA (LESPEDEZA STRIATA)	5 LBS/AC	
RYE GRAIN (SECALE CEREALE L.)	25 LBS/AC	
TALL FESCUE (FESTUCA ARUNDINACEA "REBEL II")	20 LBS/AC	
PENSACOLA BAHIAGRASS (PASPALUM NOTATUM)	50 LBS/AC	MAR 1 TO SEP 30
"APPALOW" SERICEA LESPEDEZA (UNSCARIFIED) (LESPEDEZA CUNEATA)	30 LBS/AC	
COMMON BERMUDAGRASS (HULLED) (CYNODON DACTYLON)	10 LBS/AC	
KOBE LESPEDEZA (LESPEDEZA STRIATA)	5 LBS/AC	
GERMAN MILLET (SETARIA ITALICA)	25 LBS/AC	

PROVIDE CERTIFIED SEED, FRESH, CLEAN, NEW-CROP GRASS SEED COMPLYING WITH TOLERANCE FOR PURITY AND GERMINATION ESTABLISHED BY OFFICIAL SEED ANALYSIS OF NORTH AMERICA.

SOIL AMENDMENTS:

AGRICULTURAL LIMESTONE	2000 LBS/AC
FERTILIZER 10-20-20	800 LBS/AC

MULCH:

WOOD FIBER	4000 LBS/AC
OR WOOD CELLULOSE MATERIAL	1500 LBS/AC

** TACK WITH ASPHALT UNLESS APPLIED BY HYDROSEEDER

HYDROSEEDING:
MIX SPECIFIED SEED, FERTILIZER AND PULVERIZED MULCH IN WATER, USING EQUIPTMENT ESPECIALLY DESIGNED FOR HYDROSEED APPLICATION. CONTINUE MIXING UNTIL UNIFORMLY BLENDED INTO HOMOGENEOUS SLURRY SUITABLE FOR HYDRAULIC APPLICATION. APPLY SLURRY UNIFORMLY TO ALL AREAS TO BE SEEDED. RATE OF APPLICATION AS REQUIRED TO OBTAIN SPECIFIED SEEDING SOWING RATE.

4 4 7 7 PERMANENT SEEDING
NOT TO SCALE

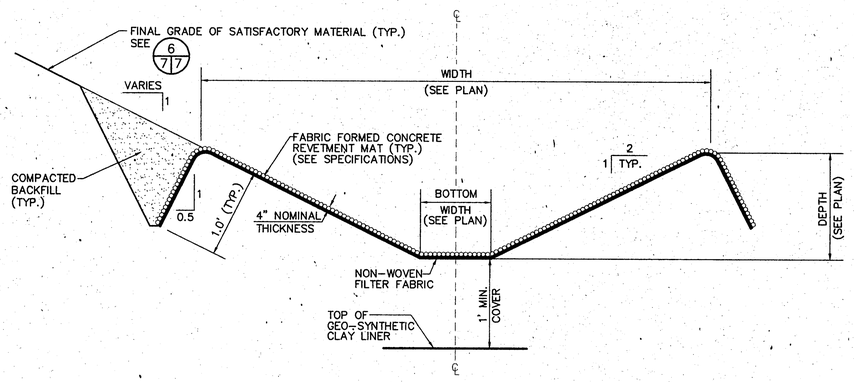

5 4 7 FABRIC FORMED REVETMENT MAT DETAIL
NOT TO SCALE

6 4 7 5 7 TYPICAL CAP SECTION
NOT TO SCALE

7 4 7 RIP RAP DISSIPATOR
NOT TO SCALE

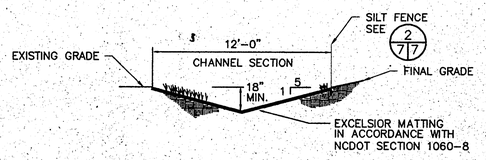

8 4 7 DITCH PROTECTION
NOT TO SCALE

EROSION CONTROL SEQUENCE

1. PROJECT IS LOCATED WITHIN A FORAGE PARTITION OF A RED COCKADED WOODPECKER CLUSTER. REMOVAL OF PINES OTHER THAN SMALL SEEDLINGS, AND DIGGING OR BLADING WITHIN 20 FEET OF PINES GREATER THAN 6" DIAMETER IS NOT AUTHORIZED.
2. INSTALL ALL TEMPORARY AND/OR PERMANENT EROSION AND SEDIMENT CONTROL DEVICES AND MEASURES AS CALLED FOR ON THE CONSTRUCTION DRAWINGS AS NEEDED AND IN ADVANCE OF EROSION CONTROL PROBLEMS.
3. INSPECT AND REPAIR ALL EROSION AND SEDIMENT CONTROL DEVICES ON A WEEKLY BASIS AND INSPECT AND REPAIR IMMEDIATELY FOLLOWING ANY RAINFALL.
4. PERFORM ALL NECESSARY MAINTENANCE ON EROSION AND SEDIMENT CONTROL DEVICES IMMEDIATELY FOLLOWING ANY RAINFALL. REPAIR OR REPLACE ANY DETERIORATED, DAMAGED OR MISSING DEVICES.
5. PROVIDE TEMPORARY OR PERMANENT GROUND COVER PER TEMPORARY OR PERMANENT SEEDING SCHEDULE ON THIS SHEET AS NEEDED FOR STABILIZATION.
6. REMOVE TEMPORARY EROSION AND SEDIMENT CONTROL DEVICES ONLY AFTER AREA REQUIRING EROSION AND SEDIMENT CONTROL DEVICES HAS BEEN STABILIZED.

F:\FT-BRAGG\LF-CLOSE\96142DT1 Thu Jul 10 17:19:39 1997

STIMMEL ASSOCIATES, P.A.
LANDSCAPE ARCHITECTURE • LAND PLANNING • CIVIL ENGINEERING
309 WEST FOURTH ST., SUITE I-A WINSTON-SALEM, NC 27101
PHONE (910) 723-1061 FAX (910) 723-1069
PROJECT NO.: 96142

RS&H®
REYNOLDS, SMITH AND HILLS, INC.
225 NORTH COURTENAY PARKWAY, SUITE C MERRITT ISLAND, FLORIDA 32953-5227
PHONE: (407) 454-6113 FAX: (407) 453-0223

MARK	DATE	DESCRIPTIONS
1	..	..

REVISIONS

DIRECTORATE OF PUBLIC WORKS AND ENVIRONMENT
FORT BRAGG, NORTH CAROLINA

LONGSTREET ROAD MSWLF CLOSURE PLAN
FORT BRAGG, NORTH CAROLINA

SCOPE: DETAILS
DATE: 11-JULY-97
SCALE: SHOWN DRAWN BY: JL SCH
SPEC. NO.: FW-00803-4
USING SERVICE
DRAWING NUMBER
DPWE-5677 SHEET 7 OF 7