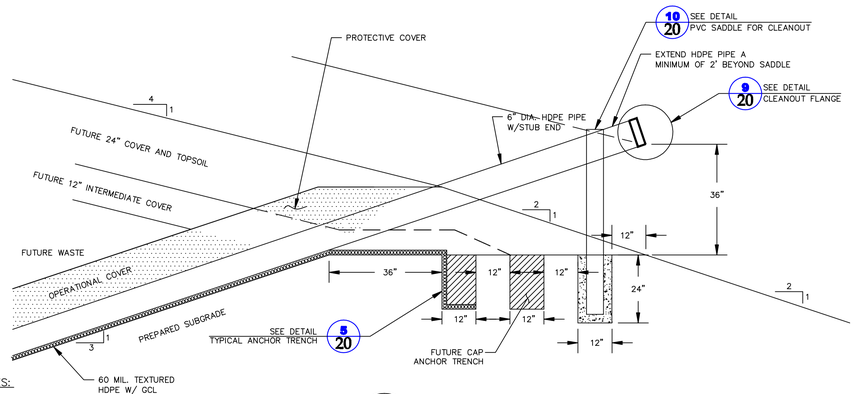

NOTES:

1. THIS DETAIL APPLIES TO THE GCL COMPOSITE LINER SYSTEM ONLY. THE LINER SECTION WILL CHANGE IF THE CONTRACTOR SELECTS THE CSL LINER SYSTEM ALTERNATIVE.

8/20 CLEANOUT DETAIL

SCALE: N.T.S.

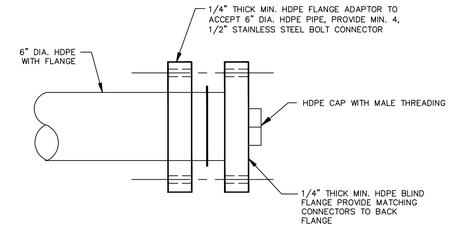

9/20 CLEANOUT FLANGE DETAIL

SCALE: N.T.S.

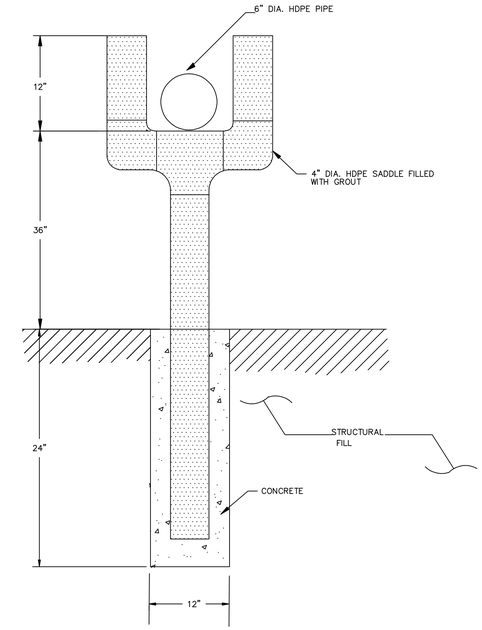

10/20 CLEANOUT SADDLE DETAIL

SCALE: N.T.S.

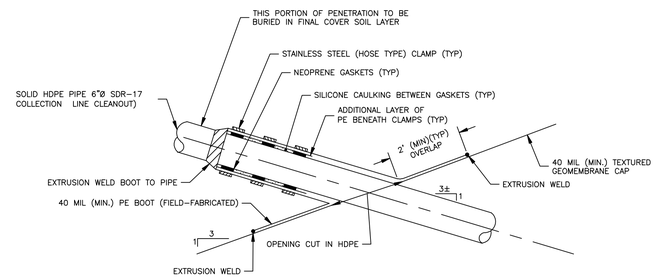

12/20 FINAL CAP COVER PENETRATION FOR RISER PIPES AND CLEANOUTS

SCALE: N.T.S.

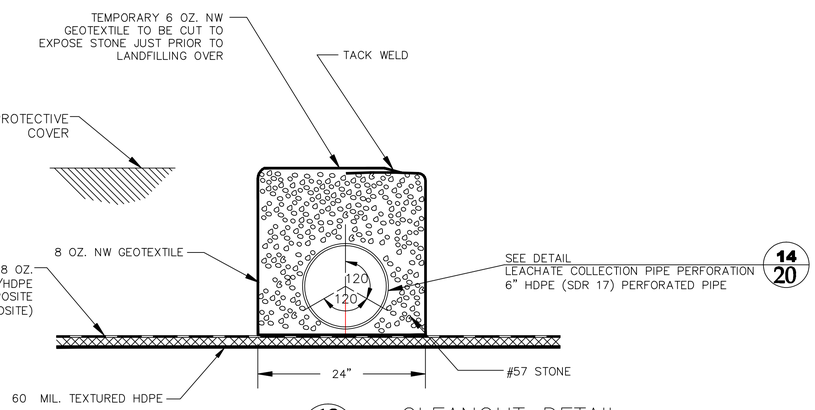

13/20 CLEANOUT DETAIL

SCALE: N.T.S.

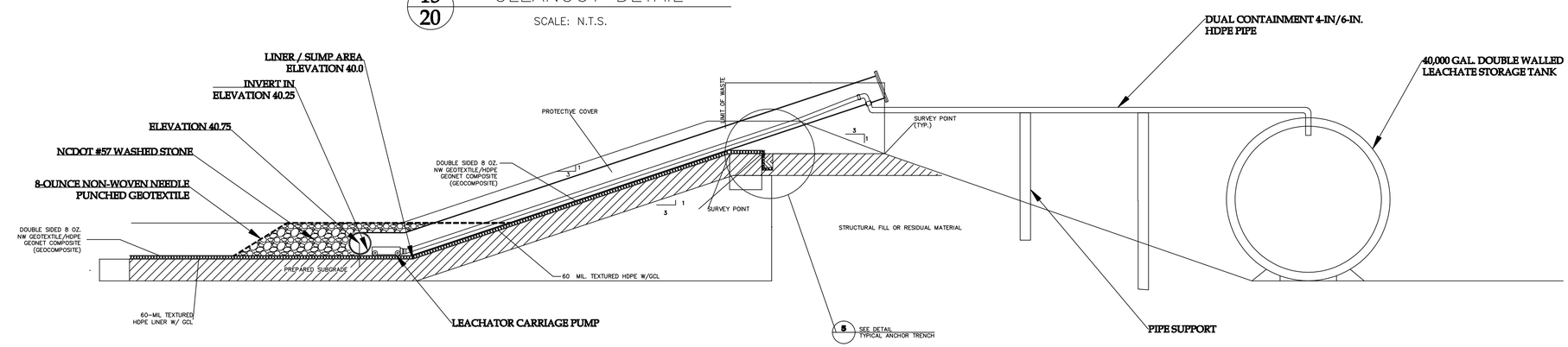

NOTES:

1. HDPE LINER AND GEOCOMPOSITE MATERIALS EXTEND ACROSS THE BOTTOM OF THE ANCHOR TRENCH SYSTEM.
2. CONTRACTOR SHALL INCLUDE SURVEY POINTS FOR TOP OF SOIL LINER FOR AS-BUILT DRAWINGS.
3. THIS DETAIL APPLIES TO THE GCL COMPOSITE LINER SYSTEM ONLY. THE LINER SECTION WILL CHANGE IF THE CONTRACTOR SELECTS THE CSL LINER SYSTEM ALTERNATIVE.

11/20 LEACHATE COLLECTION SUMP / RISER DETAIL

SCALE: N.T.S.

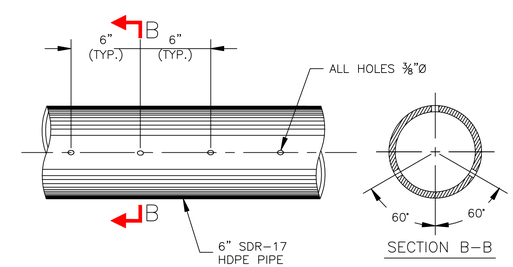

14/20 PERFORATED PIPE

SCALE: N.T.S.

NO.	DATE	APPR.	REVISION	NO.	DATE	APPR.	REVISION

MAYSVILLE C&D LANDFILL
PHASE 1 PERMIT APPLICATION

GREEN RECYCLING SOLUTIONS LLC — MAYSVILLE, NORTH CAROLINA

DRAWN BY	PROJECT ENGINEER
CJM	CJM
DESIGN ENGINEER	PROJECT MANAGER
DWW	DWW

LICENSE #C-2206
ERM NC, Inc.
8000 CORPORATE CENTER DRIVE, SUITE 200
CHARLOTTE, NORTH CAROLINA 28226
(704) 545-8565

LANDFILL DETAILS

SCALE	DATE
NTS	JUNE 2013
PROJECT NO.	AutoCAD 2007
0157343	Details Sheet 2.dwg

DRAWING NO. 20

REV. NO.

SHEET 20 OF 21